Operations, Maintenance, and Monitoring Plan
Sitcum Waterway Remediation Project

Prepared for
The Port of Tacoma

June 3, 1994
Work Order E-1288

CONTENTS

		Page
LIST OF ACRONYMS AND ABBREVIATIONS		vix
1.0	**INTRODUCTION**	1-1
1.1	***Purpose and Scope of the OMMP***	1-1
1.2	***The Components and Organization of the OMMP***	1-2
1.3	***Signatures of Owner and Preparers***	1-3

FIGURES

1-1	Vicinity Map
1-2	Phase 1 and Phase 2 Areas - Sitcum Waterway

2.0	**SUMMARY OF OPERATIONS, MAINTENANCE, AND MONITORING ACTIVITIES**	2-1
2.1	***Water Quality Monitoring***	2-1
2.2	***Sediment Quality Monitoring***	2-1
2.3	***Mitigation Monitoring***	2-2

FIGURES

2-1	Water Quality Monitoring Program Master Schedule
2-2	Sediment Quality Monitoring Program Master Schedule
2-3	Mitigation Monitoring Program Master Schedule

3.0	**WATER QUALITY MONITORING**	3-1
3.1	***Phased Monitoring Approach***	3-1
3.2	***Hydrogeology and Geochemistry***	3-2
3.3	***Groundwater Sampling and Analysis***	3-4
3.4	***Stage 1 Groundwater Monitoring***	3-8
3.5	***Stage 2 Groundwater Monitoring***	3-10
3.6	***Stage 3 Groundwater Monitoring***	3-11
3.7	***Contingency Plan***	3-13
3.8	***Schedule for Monitoring and Reporting***	3-14

CONTENTS (Continued)

Page

TABLES

3-1 Milwaukee Waterway Baseline Groundwater Quality Data 3-15
3-2 Summary of Sitcum Sediment Column Leaching Tests and Groundwater Quality Analyses 3-51
3-3 Interim Analytical Methods and Detection Limits for Groundwater Monitoring Program Analytes and Tests 3-52
3-4 Methods of Analysis and Detection Limit Goals - Water 3-53

FIGURES

3-1 Monitoring Well Network Plan
3-2 Groundwater Quality Monitoring Decision Framework - Stage 1
3-3 Groundwater Quality Monitoring Decision Framework - Stage 2
3-4 Groundwater Quality Monitoring Decision Framework - Stage 3
3-5 Site and Exploration Plan
3-6 Generalized Subsurface Profile A-A' and B-B'
3-7 Generalized Subsurface Profile C-C'
3-8 Generalized Subsurface Profile D-D' and E-E'

4.0 SEDIMENT QUALITY MONITORING 4-1

4.1 Selection of Indicator Chemicals 4-2
4.2 General Monitoring Approach to Phase 1 Area 4-3
4.3 General Monitoring Approach to Phase 2 Area 4-5
4.4 Monitoring Schedule and Reporting 4-7
4.5 Monitoring Data Chemical Analysis 4-7
4.6 Sediment Quality Monitoring Decision Framework 4-8
4.7 Long-Term Monitoring of the Phase 1 Area (Not for Additional Response Actions) 4-10
4.8 Long-Term Monitoring of the Phase 2 Area 4-10
4.9 Post-Construction Sediment Quality of the Habitat/Mitigation Area 4-10
4.10 Long-Term Sediment Quality Monitoring of the Habitat/Mitigation Area 4-11

CONTENTS (Continued)

Page

TABLES

4-1 Percentages of Detection and SQO Exceedence Information for Indicator Chemicals in Phase 1 and Phase 2 Sediment Samples 4-12
4-2 Sample Size Estimation for Phase 1 Area 4-13
4-3 Pre-Determined Phase 1 and Phase 2 Sediment Quality Sampling Locations 4-15
4-4 Methods of Analysis and Detection Limits - Sitcum Waterway Sediment 4-16
4-5 Pre-Determined Habitat/Mitigation Sediment Quality Sampling Locations 4-18
4-6 Methods of Analysis and Detection Limit Goals - Habitat/Mitigation Sediment 4-19

FIGURES

4-1 Proposed Sediment Quality Monitoring Sampling Location Plan
4-2 Sediment Quality Monitoring Decision Framework - Phase 1 and Phase 2 Areas
4-3 Milwaukee Waterway Habitat/Mitigation Area Sediment Sampling Location Plan

ATTACHMENT 4-1
TECHNICAL MEMORANDUM DATED MARCH 24, 1994
SITCUM WATERWAY REMEDIATION PROJECT
NATURAL RECOVERY ISSUES
J-3203-17

5.0 HABITAT/MITIGATION MONITORING 5-2

5.1 Overview 5-2
5.2 Baseline Monitoring 5-2
5.3 Post-Construction Habitat/Mitigation Monitoring 5-3
5.4 Juvenile Salmonid Utilization Study 5-8
5.5 Habitat/Mitigation Contingency Planning Procedures 5-12
5.6 Habitat/Mitigation Potential Contingency Actions 5-17

TABLES

5-1 Physical Monitoring Program Overview 5-19
5-2 Biological Monitoring Program Overview 5-20
5-3 Mitigation Monitoring Program Master Schedule 5-21
5-4 Physical Early Warning Triggers and Performance Standards 5-23
5-5 Biological Early Warning Triggers and Performance Standards 5-24
5-6 Proposed Sampling for the Salmonid Utilization Study by Activity, Location, and Sampling Week 5-28

CONTENTS (Continued)

Page

FIGURES

5-1 Flow Chart of Port Guarantees of Statistical Power for Benthic Sampling and Analysis
5-2 Problem Recognition Process
5-3 Contingency Planning and Contingency Response Process

REFERENCES

CONTENTS (Continued)

PagePage

APPENDIX A
GROUNDWATER SAMPLING OPERATIONS MANUAL
FOR THE SITCUM WATERWAY REMEDIATION PROJECT A-1

A.1 INTRODUCTION A-1

A.2 PREPARATION FOR SAMPLING A-1

A.2.1 Review this Manual A-2
A.2.2 Know Where to Go A-2
A.2.3 Contact Port of Tacoma A-2
A.2.4 Contact Sea-Land A-2
A.2.5 Contact Laucks Testing Laboratories A-2
A.2.6 Contact Hart Crowser/Field Supplies A-3

A.3 SAMPLING PROTOCOL A-3

A.3.1 Sampling Protocol Consists of Six Activities A-4
A.3.2 Water Depth Measurements A-4
A.3.3 Well Purging A-4
A.3.4 Bottle Labeling A-6
A.3.5 Sample Collection A-6
A.3.6 Sample Collection for Well in Fill A-8
A.3.7 Field Parameters A-9
A.3.8 Leaving the Well A-9

A.4 POST SAMPLING PROCEDURES A-10

A.4.1 Chain of Custody A-10
A.4.2 Laboratory Services Work Orders A-10
A.4.3 Samples Delivery A-10
A.4.4 Field Report A-10

TABLES

A-1 People to Contact Prior to Sampling Event A-12
A-2 Directions to Sea-Land Terminal and Well Locations A-13
A-3 Summary of Sampling Events A-14
A-4 Supplies and Equipment A-15
A-5 Pump Location in Well/Screened Interval A-16

CONTENTS (Continued)

Page

FIGURES

A-1 Port of Tacoma Vicinity Map
A-2 Sea-Land Terminal Map (Monitoring Well Location Map)
A-3 Laboratory Services Work Order
A-4 Field Equipment and Supplies Form
A-5 Groundwater Monitoring Well System
A-6 Sample Custody Record Form
A-7 Laucks Testing Laboratories Map

ATTACHMENT A-1
BLADDER PUMP OPERATIONS
AND MAINTENANCE MANUAL A-1-1

ATTACHMENT A-2
COMPRESSOR OPERATIONS
AND MAINTENANCE MANUAL A-2-1

ATTACHMENT A-3
CONTROLLER OPERATIONS
AND MAINTENANCE MANUAL A-3-1

ATTACHMENT A-4
QUALITY ASSURANCE PROJECT PLAN
FOR GROUNDWATER QUALITY ANALYSIS
SITCUM WATERWAY REMEDIATION PROJECT A-4-1

ATTACHMENT A-5
LAUCKS TESTING LABORATORIES
QUALITY CONTROL MANUAL A-5-1

ATTACHMENT A-6
BORING LOGS
AND MONITORING WELL INSTALLATION DIAGRAMS A-6-1

ATTACHMENT A-7
HEALTH AND SAFETY PLAN FOR GROUNDWATER SAMPLING
SITCUM WATERWAY REMEDIATION PROJECT A-7-1

CONTENTS (Continued)

	Page
APPENDIX B	
SEDIMENT SAMPLING OPERATIONS MANUAL	
SITCUM WATERWAY REMEDIATION PROJECT	B-1
B.1 INTRODUCTION	B-1
B.1.1 Purpose and Scope of this Document	B-1
B.2 PREPARATION FOR SAMPLING	B-1
B.2.1 Review this Appendix	B-1
B.2.2 Contact the Port of Tacoma	B-1
B.2.3 Contact Analytical Laboratories	B-2
B.2.4 Contact Subcontractors	B-2
B.2.5 Organize Field Supplies	B-3
B.2.6 Install Tide Gauges	B-3
B.2.7 Setting up the LASERTRAK® Location Control System	B-3
B.3 SEDIMENT SAMPLING PROCEDURES	B-4
B.3.1 General Approach	B-4
B.3.2 Crew and Vessel Specifications	B-4
B.3.3 Arrival at the Site	B-4
B.3.4 Phase 1 Area and Habitat/Mitigation Area Sediment Sampling	B-5
B.3.5 Phase 2 Area Sediment Sampling	B-7
B.3.6 Field Equipment Decontamination	B-8
B.3.7 Location Control and Documentation	B-9
B.3.8 Sediment Quality Sample Handling	B-11
B.4 POST SAMPLING PROCEDURES	B-12
B.4.1 Sample Transport and Log-In	B-12
B.4.2 Chain of Custody	B-12
B.4.3 Field Report	B-13
B.4.4 Confirm Sampling Locations	B-13

CONTENTS (Continued)

Page

TABLES

B-1 People to Contact Prior to Sampling Event B-14
B-2 Equipment and Supplies B-15
B-3 Sample Containers, Preservation, and Holding Times for Sediment Samples B-16
B-4 Pre-Determined Phase 1 and Phase 2 Sediment Quality Sampling Locations B-17
B-5 Pre-Determined Habitat/Mitigation Sediment Quality Sampling Locations B-18

FIGURES

B-1 Vicinity Map
B-2 Proposed Sediment Quality Monitoring Sampling Location Plan
B-3 Horizontal Control Survey Map
B-4 Sediment Sampling Form
B-5 van Veen Grab Sampler
B-6 Sample Identification Label
B-7 Field Sample Custody Record Form
B-8 Sample Tracking Form
B-9 Custody Seal

ATTACHMENT B-1
QUALITY ASSURANCE PROJECT PLAN
FOR SEDIMENT QUALITY ANALYSIS CHEMISTRY
SITCUM WATERWAY REMEDIATION PROJECT

ATTACHMENT B-2
HEALTH AND SAFETY PLAN FOR SEDIMENT SAMPLING
SITCUM WATERWAY REMEDIATION PROJECT

CONTENTS (Continued)

	Page
C.1.0 HABITAT/MITIGATION MONITORING MANUAL — MILWAUKEE WATERWAY	C-1
C.1.1 Physical Monitoring	C-1
C.1.2 Biological Monitoring	C-6
C.2.0 DATA ANALYSIS AND PERFORMANCE STANDARDS	C-28
C.2.1 Benthic Infauna	C-28
C.2.2 Epibenthic Plankters	C-33
C.2.3 Plant Assemblage and Coverage (Saltmarsh and Upland)	C-33
C.2.4 Avifauna	C-33
C.2.5 Benthic Microalgae	C-33
C.2.6 Benthic Macroalgae	C-33
C.2.7 Juvenile Salmonid Utilization Study	C-34
REFERENCES	C-35

FIGURES

C-1 Physical Monitoring - Survey of Habitat Boundaries
C-2 Physical Monitoring - Permanent Elevation Transects and Substrate Sampling Locations
C-3 Physical Monitoring - Permanent Photograph Points and Perspectives
C-4 Biological Monitoring - Epibenthic Plankters Sampling Locations (Approximate)
C-5 Biological Monitoring - Benthic Infauna Sampling Locations (Approximate)
C-6 Flow Chart of Analysis of Benthic Infauna and Epibenthic Plankter Data

ATTACHMENT C-1 QUALITY ASSURANCE PROJECT PLAN FOR HABITAT/MITIGATION MONITORING SITCUM WATERWAY REMEDIATION PROJECT	C-1-1
ATTACHMENT C-2 HEALTH AND SAFETY PLAN FOR HABITAT/ MITIGATION MONITORING SITCUM WATERWAY REMEDIATION PROJECT	C-2-1

OPERATIONS, MAINTENANCE, AND MONITORING PLAN SITCUM WATERWAY REMEDIATION PROJECT

1.0 INTRODUCTION

This document presents the Operations, Maintenance, and Monitoring Plan (OMMP) for the Sitcum Waterway Remediation Project as specified under the Administrative Order on Consent (Order) and Statement of Work (SOW) for the Remedial Design and Remedial Action for the Sitcum Waterway Problem Area and Other Areas of the Commencement Bay Nearshore/Tideflats (CB/NT) Superfund Site (EPA, 1991a and 1991b). See Figure 1-1 for a map of the Commencement Bay Nearshore/Tideflats vicinity.

1.1 Purpose and Scope of the OMMP

The purpose of this document is to describe the rationale for and set forth the post-construction environmental monitoring activities to occur as part of the Sitcum Waterway Remediation Project. The attached appendices identify monitoring objectives and procedures to be followed for environmental monitoring of groundwater, sediments, and habitat/ mitigation associated with the remediation project.

The Order states that:

> "The objectives of the OMMP is to determine the effectiveness of contaminated sediment removal (dredging), confirm natural recovery in appropriately designated areas, evaluate the success of the remedy, evaluate the effectiveness of the confinement structure, evaluate the success of the habitat enhancement and fisheries mitigation, and confirm the attainment of cleanup objectives."

To meet these objectives, the general monitoring activities of the OMMP are as follows:

- Post-construction monitoring of the Sitcum Waterway Phase 1 and Phase 2 areas;
- Long-term monitoring of the nearshore disposal site; and
- Long-term monitoring of habitat/mitigation area at and beyond the mouth of the Milwaukee Waterway.

It should be noted that it is unknown whether the specified sediment removal in the Phase 2 area will leave sediments with chemical concentrations above SQOs. Therefore, the need for reliance on natural

recovery is not clear at this time. The OMMP does not specifically address monitoring of sediment contamination problems expected to be corrected by natural recovery (which includes source control considerations). If such monitoring is required in the future, the specifics will be provided as part of an Additional Response Action as identified in the Consent Decree.

Sediments in the Phase 1 areas (see Figure 1-2) of the Sitcum Waterway are to be removed to specified depths as part of the remedial action. In addition, in the Phase 2 areas, sediments lying above the riprapped or engineered side slopes are to be removed.

The OMMP describes the post-construction monitoring data objectives including the type, number, and location of samples to be collected; the frequency of sample collection; the analyses to be performed; the sampling equipment and methods to be used and the schedule for reporting. For the water quality monitoring program, the OMMP also includes a description of data quality objectives, a description of threshold or triggering criteria, and a description and schedule of corrective action to be implemented in the event that contaminant concentration thresholds are exceeded.

This document is provided as part of the remedial design plans and specifications, Remedial Action Health and Safety Plan (RAHSP), and Construction Quality Assurance Plan (CQAP) for the Sitcum Waterway Remediation Project. Further, this document is intended to comply with Section V.D. of the SOW.

Reference information on environmental characterization and monitoring of the Sitcum Waterway may be found in the following documents:

- Sitcum Waterway Pre-Remedial Design Phase 1 and Phase 2 Data Report (Port, 1992a);
- Sitcum Waterway Pre-Remedial Design Natural Resource Data Report (Port, 1992b); and
- Sitcum Waterway Remediation Project Evaluation Report (Port, 1992c).

1.2 The Components and Organization of the OMMP

Section 2.0 of the OMMP presents a summary of the monitoring plans for Water Quality, Sediment Quality, and Habitat/Mitigation. These monitoring plans are further detailed in Sections 3.0, 4.0, and 5.0, respectively. Appendices A, B, and C present operational details including field sampling procedures, quality assurance requirements, and health and safety requirements for each monitoring plan.

1.3 Signatures of Owner and Preparers

The undersigned individuals have been responsible for the preparation of this document. Questions or comments about this document or the described work should be addressed to any of them.

Richard Gilmur
Environmental Program Manager
Port of Tacoma
P.O. Box 1837
Tacoma, Washington 98401
206/383-5841

Date

Glenn B. Grette
Senior Fisheries Biologist
Parametrix, Inc.
5808 Lake Washington Blvd. NE
Kirkland, Washington
206/822-8880

Date

Philip A. Spadaro
Senior Environmental Chemist
Hart Crowser, Inc.
1910 Fairview Avenue East
Seattle, Washington 98102
206/324-9530

Date

320308\OMMP.fr

Vicinity Map

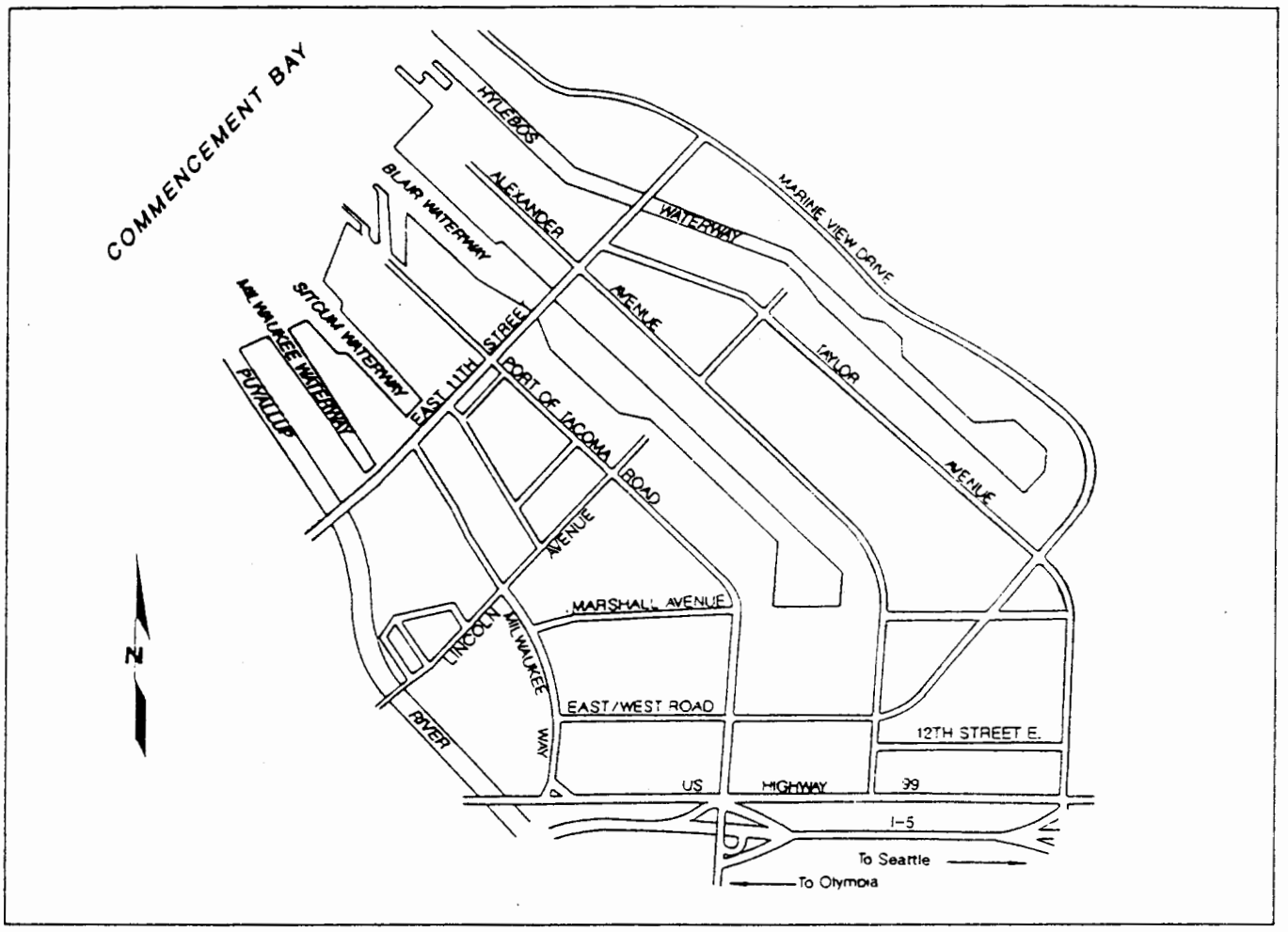

Regional Map

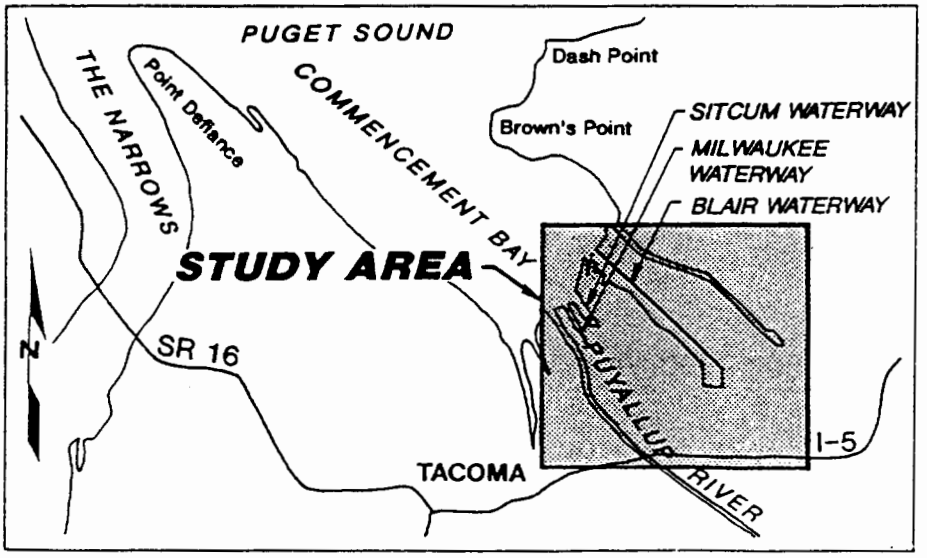

NOT TO SCALE

HARTCROWSER

J-3203-08 12/92

Figure 1-1

Phase 1 and Phase 2 Areas

Sitcum Waterway

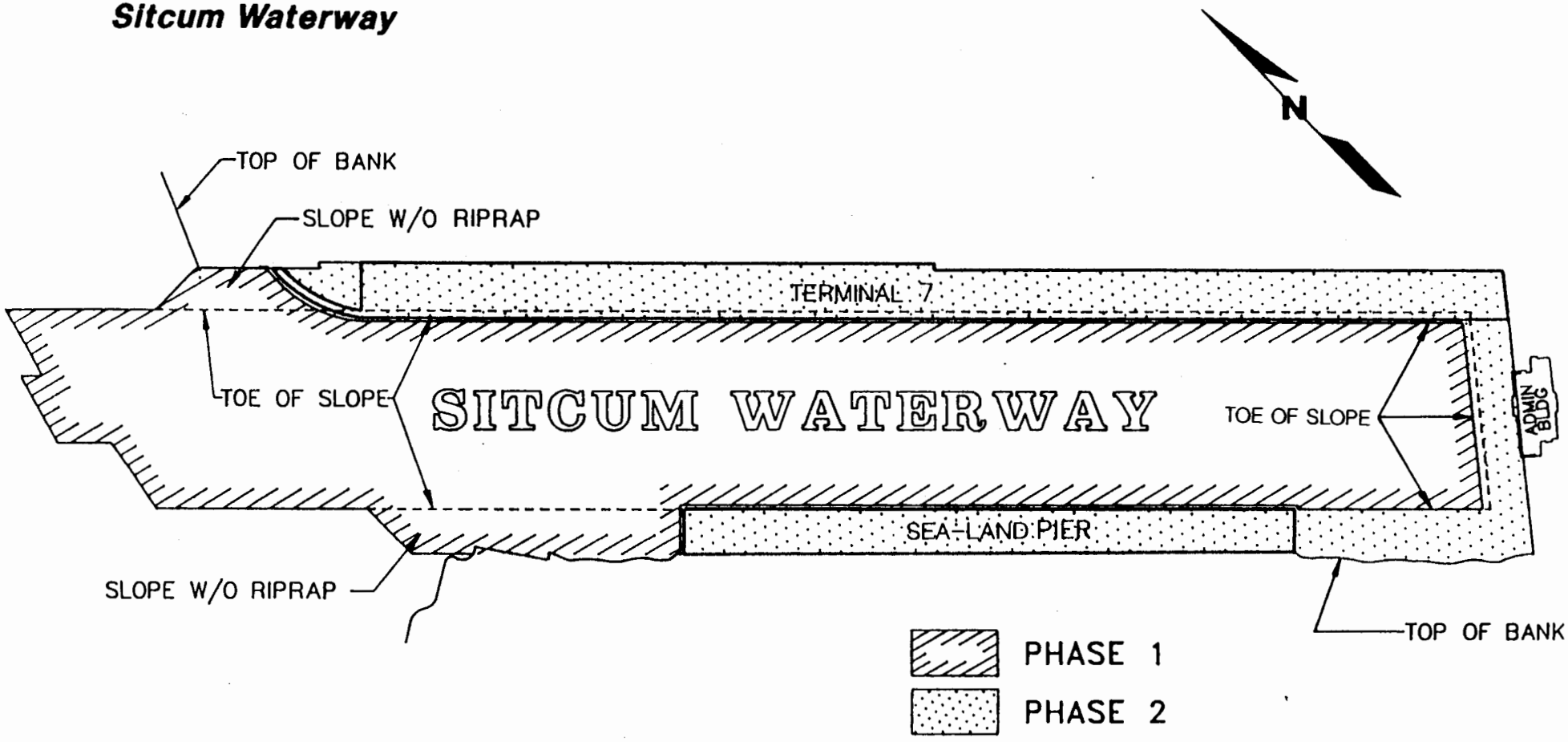

HARTCROWSER

J-3203-08 12/92
Figure 1-2

0 400 800
Scale in Feet

2.0 SUMMARY OF OPERATIONS, MAINTENANCE, AND MONITORING ACTIVITIES

This section provides a summary of the OMMP components.

2.1 Water Quality Monitoring

The water quality monitoring program, presented in Section 3.0, is designed to evaluate long-term groundwater quality around the Milwaukee Waterway nearshore disposal site and to assess potential impacts to surrounding surface water from groundwater discharge should changes in groundwater quality occur. Groundwater quality will be evaluated to ensure compliance with project-specific performance standards. The program is designed around a phased approach for monitoring and includes collection and analysis of groundwater samples. Figure 2-1 presents the water quality monitoring program master schedule. The objectives of this program are to:

- Monitor local groundwater quality over time, using statistical techniques to identify significant departures from baseline conditions;
- Use the monitoring data and subsequent analyses as an "early warning" system indicative of changes to groundwater quality; and
- Evaluate the potential impact of groundwater discharges to the adjacent surface water by implementing potential contingency actions if significant changes are detected during scheduled monitoring.

2.2 Sediment Quality Monitoring

The sediment quality monitoring program, presented in Section 4.0, is designed to address the effectiveness of sediment removal as part of the Sitcum Waterway Remediation Project. The program addresses sampling of the Phase 1 and Phase 2 areas to assess the quality of sediments remaining after dredging. The sediment quality monitoring program includes sample collection, chemical analysis, and data interpretation. Figure 2-2 presents the sediment quality monitoring program master schedule. The objectives of this program are to:

- Select indicator chemicals;
- Describe the statistical basis for determining the frequency and location of Phase 1 and Phase 2 sediment sampling for the initial post-construction monitoring program;
- Describe the basis for evaluating the effectiveness of remediation with respect to sediment quality objectives (SQOs);

- Describe the monitoring data chemical analysis; and
- Develop a decision framework for evaluating Sitcum Waterway sediment quality.

In addition, Section 4.0 presents the post-construction sediment quality monitoring activities to be performed on the habitat/mitigation fill prior to placement of the clean imported materials which will provide the select surface substrate. In addition, Section 4.0 presents the long-term sediment quality monitoring activities to be performed on the habitat/mitigation area.

2.3 Habitat/Mitigation Monitoring

The habitat/mitigation monitoring program, presented in Section 5.0, is designed to evaluate the success of the habitat/mitigation actions relative to the mitigation goals and objectives, and the performance standards. The program includes physical and biological monitoring of the habitat/mitigation at and beyond the mouth of the Milwaukee Waterway. Figure 2-3 presents the habitat/mitigation area monitoring program master schedule.

The objectives of this program are to:

- Monitor changes in elevation and substrate grain size;
- Collect information that can be used to assess the biological function of the habitat/mitigation;
- Evaluate the success of the habitat/mitigation project; and
- Provide a rationale framework for determining whether contingency actions should be considered based on the results of the sampling.

Post-construction sediment quality monitoring activities to be performed on the habitat/mitigation fill prior to placement of the clean imported materials which will provide the select surface substrate are presented in Section 4.0. In addition, Section 4.0 presents the long-term sediment quality monitoring activities to be performed on the habitat/mitigation area.

320308\OMMP.FR

Water Quality Monitoring Program Master Schedule

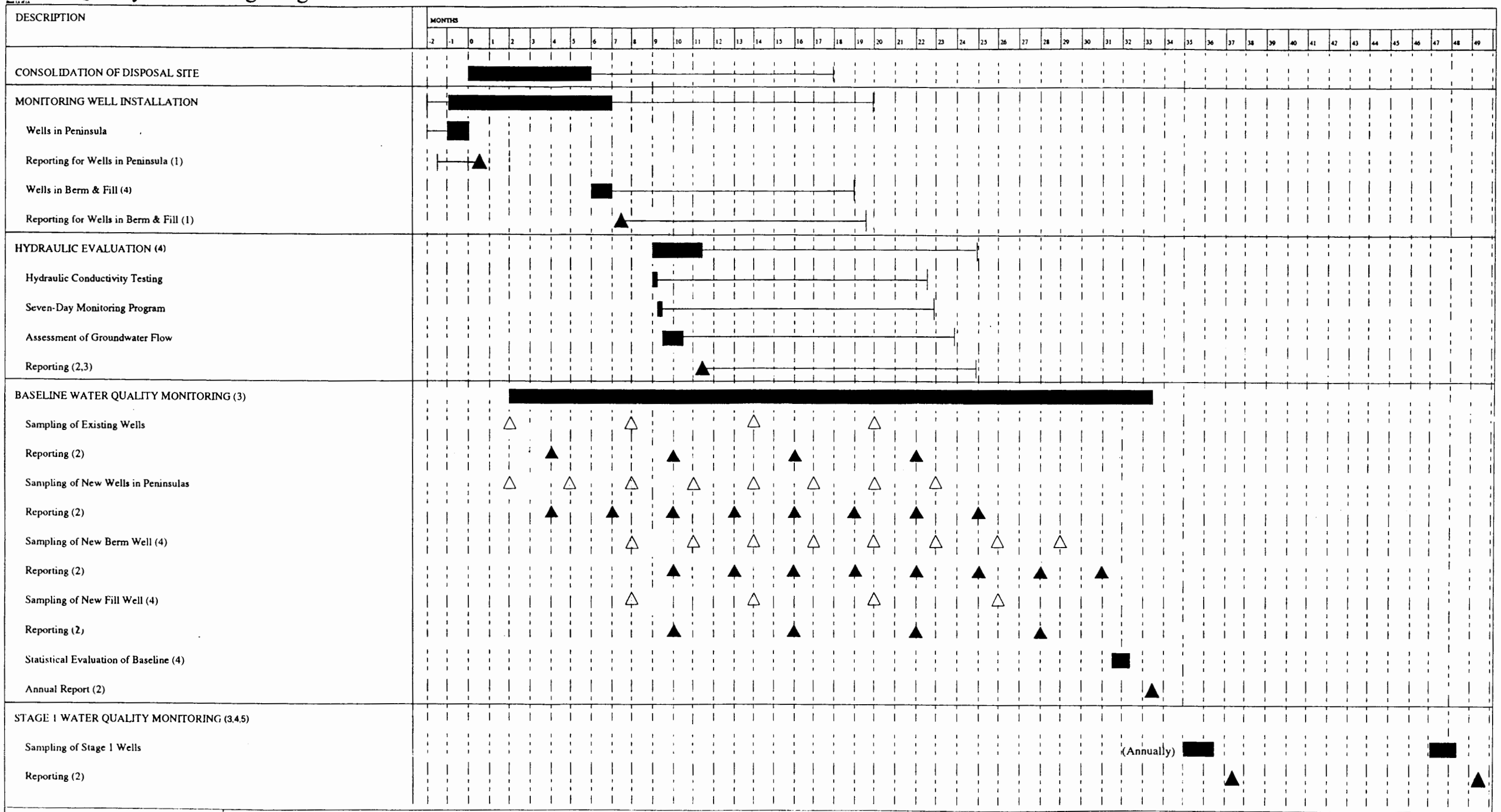

FLOAT

▲ REPORTING MILESTONE

△ SAMPLING MILESTONE

1) A well installation report will be provided to EPA within 14 days of installation.
2) Sampling data will be provided to EPA within 60 days of collection. A monitoring program report will be submitted to EPA annually.
3) After evaluation of hydraulic data, the Port may propose to EPA for approval to no longer monitor certain wells that may be found to be upgradient of the fill.
4) The schedule for these events is dependent on the end of consolidation of the disposal site and may shift accordingly.
5) Based on the expectation that the wells will not demonstrate statistically significant wet season/dry season concentration variations. The annual stage 1 monitoring is expected to occur in the wet season.

NOTE:
This schedule is approximate and may change based on the construction schedule and monitoring results.

HARTCROWSER
J-3203-08 4/94
Figure 2-1

Sediment Quality Monitoring Program Master Schedule

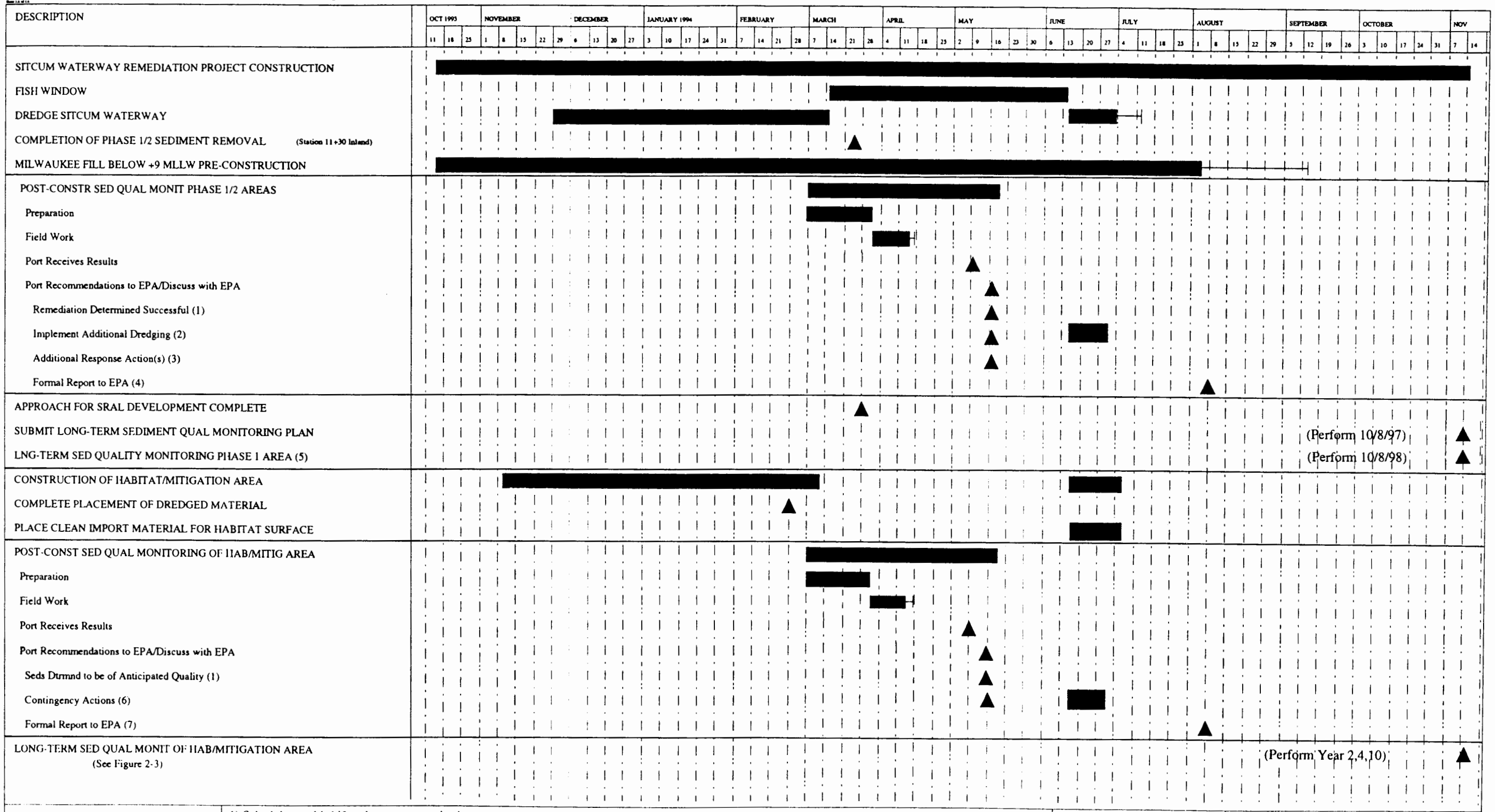

FLOAT

MILESTONE

1) Schedule would shift to long-term monitoring.
2) If necessary, additional point dredging within the Phase 1 area and appropriate confirmation sedimetn sampling.
3) May include natural recovery of Phase 1/2 area(s) or enhanced natural recovery through thin-layer placement in the Phase 2 area. Any Additional Response Action(s) [ARA(s)] will be identified and scheduled pursuant to the provisions of the Consent Decree.
4) Incorporation of any additional dredging or ARA(s) may impact report submittal date for EPA.
5) Long-term monitoring of Phase 2 area will be determined as part of ARAs.
6) If necessary, the Port and EPA will identify and implement contingency actions.
7) Incorporation of any Contingency Action may impact report submittal date to EPA.

NOTE:

This schedule is approximate and may change based on the construction schedule and necessary changes identified during construction.

HARTCROWSER
J-3203-08 4/94
Figure 2-2

Sediment Quality Monitoring Program Master Schedule

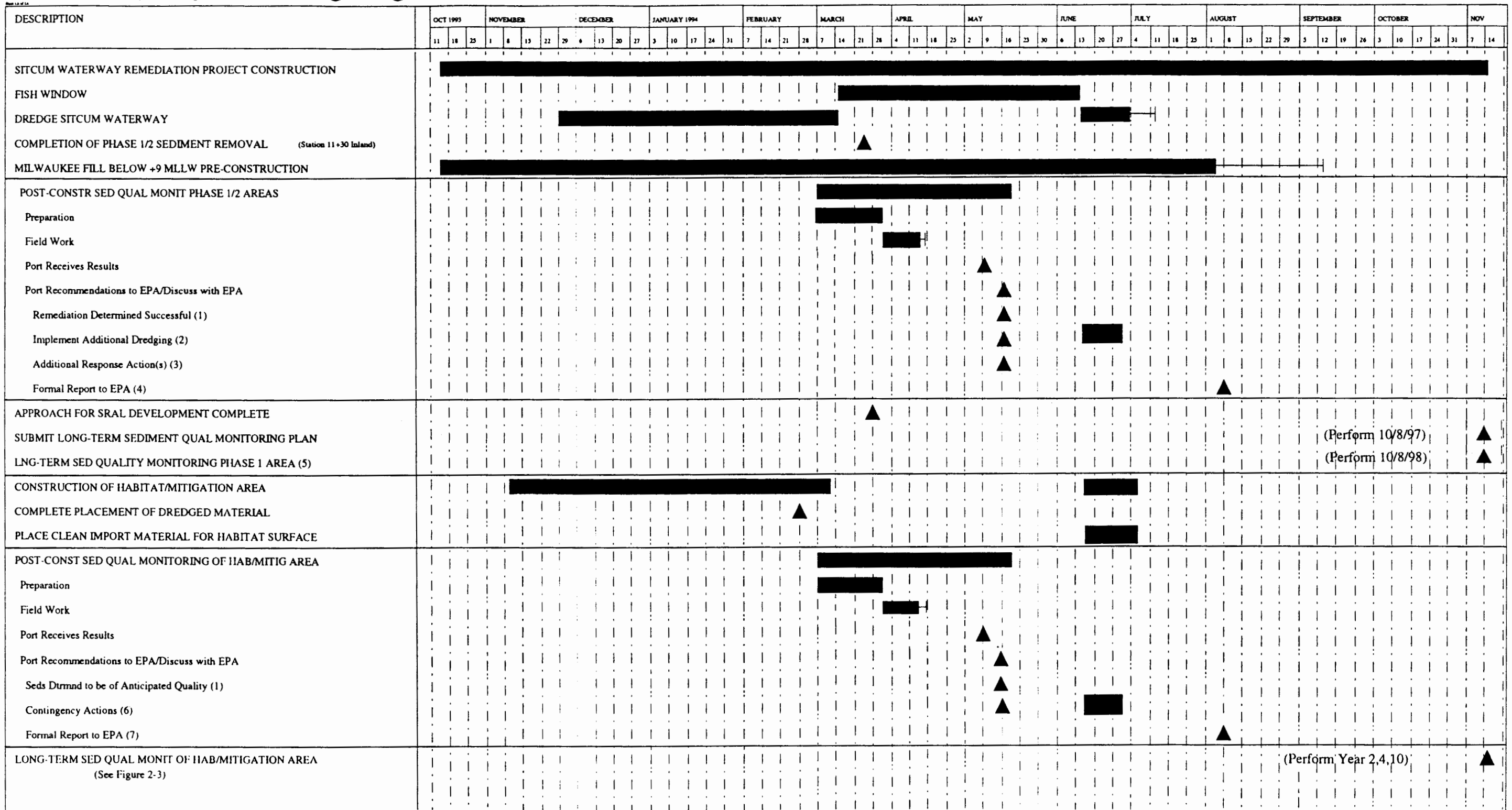

FLOAT

MILESTONE

1) Schedule would shift to long-term monitoring.
2) If necessary, additional point dredging within the Phase 1 area and appropriate confirmation sedimetn sampling.
3) May include natural recovery of Phase 1/2 area(s) or enhanced natural recovery through thin-layer placement in the Phase 2 area. Any Additional Response Action(s) [ARA(s)] will be identified and scheduled pursuant to the provisions of the Consent Decree.
4) Incorporation of any additional dredging or ARA(s) may impact report submittal date for EPA.
5) Long-term monitoring of Phase 2 area will be determined as part of ARAs.
6) If necessary, the Port and EPA will identify and implement contingency actions.
7) Incorporation of any Contingency Action may impact report submittal date to EPA.

NOTE:

This schedule is approximate and may change based on the construction schedule and necessary changes identified during construction.

HARTCROWSER
J-3203-08 4/94
Figure 2-2

Figure 2-3. Mitigation Monitoring Program Master Schedule.

Prior to Monitoring		1994				1995				1996[1]				1997				1998[1]				1999			
		Year 0				Year 1				Year 2				Year 3				Year 4				Year 5			
		Quarter				Quarter				Quarter				Quarter				Quarter				Quarter			
Habitat Type	Activity	1	2	3	4	1	2	3	4	1	2	3	4	1	2	3	4	1	2	3	4	1	2	3	4
Emergent Marsh	* Plant saltmarsh vegetation					X[3]																			
Gravel/Cobble	* Place select substrates			X[3]																					
Upland	* Plant upland vegetation (except at closure berm)				X[3]																				
	* Plant upland vegetation on face and top of the closure berm								X[4]																
	* Present reference areas for EPA approval							X[5]																	
Monitoring																									
Habitat Type	Habitat Attribute																								
Emergent Marsh	1. Plant assemblage and coverage											X								X					
	2. Avifauna									X	X	X	X					X	X	X	X				
Sandflat/Mudflat	1. Benthic microalgae										X								X						
	2. Benthic macroalgae											X								X					
	3. Avifauna									X	X	X	X					X	X	X	X				
	4. Epibenthic plankters					X					X								X						
	5. Benthic infauna									X								X							
Gravel/Cobble	1. Benthic macroalgae											X								X					
	2. Avifauna									X	X	X	X					X	X	X	X				
	3. Epibenthic plankters					X					X								X						
	4. Benthic infauna									X[6]								X[6]							
Upland Habitat[4]	1. Plant assemblage and coverage							X				X								X					
	2. Avifauna									X	X	X	X					X	X	X	X				
Physical Monitoring						X[7]					X				X[8]					X					
Salmon Utilization Study																				X[9]					
Report Submittal (all activities)									X[10]					X[10]		X[10]						X[10]			

Figure 2-3. Mitigation Monitoring Program Master Schedule (continued).

Monitoring		2000 [2]				2001				2002 [2]				2003				2004 [2]				2005			
		Year 6				Year 7				Year 8				Year 9				Year 10				Year 11			
		Quarter				Quarter				Quarter				Quarter				Quarter				Quarter			
Habitat Type	Habitat Attributes	1	2	3	4	1	2	3	4	1	2	3	4	1	2	3	4	1	2	3	4	1	2	3	4
Emergent Marsh	1. Plant assemblage and coverage			X								X								X					
	2. Avifauna	X	X	X	X					X	X	X	X					X	X	X	X				
Sandflat/Mudflat	1. Benthic microalgae		X								X								X						
	2. Benthic macroalgae			X								X								X					
	3. Avifauna	X	X	X	X					X	X	X	X					X	X	X	X				
	4. Epibenthic plankters		X								X								X						
	5. Benthic infauna	X								X								X							
Gravel/Cobble	1. Benthic macroalgae			X								X								X					
	2. Avifauna	X	X	X	X					X	X	X	X					X	X	X	X				
	3. Epibenthic plankters		X								X								X						
	4. Benthic infauna	X								X								X							
Upland Habitat	1. Plant assemblage and coverage			X								X								X					
	2. Avifauna	X	X	X	X					X	X	X	X					X	X	X	X				
Physical Monitoring			X								X								X						
Salmon Utilization Study							X[9]																		
Report Submittal (all activities)							X[10]		X[10]						X[10]										X[10]

1. Test against early warning triggers.
2. Test against performance standards.
3. Construction may continue into the quarter following that indicated.
4. The schedule for planting and monitoring upland habitat on the face and top of the closure berm is dependent on the completion of consolidation of the disposal site, construction of the final pavement (cap), and removal of the temporary berm road; and may shift accordingly.
5. Reference areas will be identified for EPA approval at least 6 months prior to sampling. Note that the year 1 sampling of epibenthic plankters does not include sampling at a reference area.
6. Sampling of benthic infauna in the gravel/cobble habitat will begin in year 4. However, if habitat supporting this assemblage exists, it will be sampled in year 2. If habitat has not developed adequately to support infauna, no sampling will be conducted in years 2 or 4.
7. This is the "as-built" survey.
8. Substrate characterization is not conducted during this year. The Port will notify EPA not less than 14 days prior to changing scheduled sampling dates.
9. The Port will notify EPA not less than 30 days prior to sampling.
10. Annual report will be submitted to EPA for approval 2 months after the last monitoring activity of each year.

3.0 WATER QUALITY MONITORING

The purpose of this monitoring program is to protect water quality in adjacent surface water from contaminants which could potentially migrate in groundwater from the Milwaukee Waterway nearshore confined disposal site. The performance standard for this monitoring program is marine chronic criteria or ambient surface water quality in adjacent surface water (whichever is greater). The point of compliance for this performance standard is the sediment/surface water interface outside of the berm and peninsulas.

The monitoring program is designed to detect and evaluate possible long-term changes in groundwater quality in the areas surrounding the disposal site to ensure compliance with the performance standards. The program includes the collection, analysis, and interpretation of groundwater quality data from five existing and seven proposed monitoring wells installed around the perimeter of and within the Milwaukee Waterway nearshore disposal site (Figure 3-1). The objectives of this program are to:

- Monitor local groundwater quality over time, using statistical techniques to identify significant departures from baseline conditions;
- Use the monitoring data and subsequent analyses as an "early warning" system indicative of changes to groundwater quality; and
- Evaluate the potential impact of groundwater discharges to the adjacent surface water by implementing potential contingency actions if significant changes are detected during scheduled monitoring.

This program sets forth the location, frequency, and analysis of groundwater samples for monitoring conditions surrounding the Milwaukee Waterway nearshore disposal site. Appropriate health and safety measures and field sampling procedures are presented in Appendix A, Groundwater Sampling Operations Manual.

The water quality monitoring master schedule is shown on Figure 2-1.

3.1 Phased Monitoring Approach

The monitoring program is designed around a phased approach which includes three stages of monitoring. The phased approach provides for flexibility in the monitoring program which will enable the Port and EPA to optimize specific actions (such as location of additional monitoring wells) which may be deemed necessary during the monitoring program. The three stages of monitoring are summarized with decision trees on Figures 3-2, 3-3, and 3-4.

Actions in Stage 1 are designed to answer the question as to whether concentrations of certain constituents demonstrate a statistically significant increase above baseline groundwater quality as a result of placement of fill in the Milwaukee Waterway. Actions that will be accomplished include routine monitoring of groundwater quality and statistical analysis of the results using the Shewhart-CUSUM control chart method. If statistically significant increases are observed, then the Port will propose, and EPA will determine, whether to shift to Stage 2.

The purpose of Stage 2 monitoring is to identify the existence of potential contaminant plumes migrating from the fill area, and to estimate the areal and vertical extent of the plume. Actions in Stage 2 will include refining of transport analyses, establishment of threshold criteria with EPA approval, and installation of additional monitoring wells. Stage 2 actions may also include an increase in monitoring frequency and the list of analytes, if deemed necessary. If Stage 2 threshold criteria are exceeded, then the Port will propose, and EPA will determine, whether to shift to Stage 3. If the existence of a plume is not identified, or if threshold criteria are not exceeded after a period of time, then the Port may propose, and EPA will determine, whether to return to Stage 1.

Stage 3 is designed to identify whether there is the potential for performance standards to be exceeded. Additional wells, including sentinel well(s) will be installed at the beginning of Stage 3 monitoring. Transport analyses may again be refined to optimize the location of additional monitoring wells, including the sentinel wells. Threshold criteria for Stage 3 at the sentinel wells will be marine chronic criteria or ambient surface water quality in adjacent surface water (whichever is greater). If Stage 3 threshold criteria are exceeded, then the Port will propose, and EPA will determine, whether to proceed with contingency plans.

Although implementation of each stage is designed to occur sequentially, a shift to a different stage, or to the contingency plan may occur, if indicated by data collected for the monitoring program.

As part of this monitoring program, EPA and the Port will periodically review the utility of the various monitoring elements. If any of the elements are found to be no longer necessary, the Port and EPA may agree to terminate any or all of the monitoring elements.

3.2 Hydrogeology and Geochemistry

Upon filling, the Milwaukee Waterway nearshore disposal site will become an upland area with a groundwater flow system similar to that observed beneath other Commencement Bay land masses and peninsulas, which are bordered by parallel rivers and waterways. The following discussions briefly summarize the subsurface soil conditions and baseline geochemical

data pertinent to the design and operation of the monitoring program. Additional details, which form the basis for these discussions, are presented in the Phase 1 Pre-Remedial Design Evaluation and Phase 2 Preliminary Evaluation of Remedial Options Report (Evaluation Report; Port, 1992c).

3.2.1 Unconfined Water-Bearing Soils

Subsurface deposits beneath the peninsulas located on each side of the Milwaukee Waterway typically consist of silty sand with non-continuous silt and clay layers, as observed in soil borings extending to depths of 75 feet (about elevation -58 feet Mean Lower Low Water [MLLW] as defined by Port of Tacoma and U.S. Army Corps of Engineers datum). Interpretation of these pre-existing soil conditions are shown in cross section on Figures 3-6 and 3-7. The profile locations are shown on Figure 3-5 along with the locations of wells used in their development. While three soil horizons (Upper, Middle, and Lower) can be identified based on origin and density, groundwater monitoring indicates that the three soil horizons behave as a single unconfined water-bearing zone. Because the anticipated grain size of the fill material is consistent with the adjacent soil types, these deposits will collectively form a single unconfined water-bearing system.

A radial groundwater flow system with both horizontal and vertical components is expected to develop within the newly formed peninsula. The primary direction of groundwater flow (calculated as a net gradient averaged over multiple tidal cycles) will be from the fill (and from uplands south of the site) toward the surrounding water bodies. While the net gradient will be toward the surrounding water bodies, short-term reversals (with groundwater flow from the water bodies toward the fill) will occur during high tide periods.

Based on groundwater flow modeling of post-construction conditions conducted during pre-remedial design, net average linear groundwater velocities were estimated to range from 10 to 40 feet per year. This resulted in groundwater travel times of approximately 10 to 80 years between the fill and the adjacent water bodies. Since the monitoring wells on the peninsulas are generally located midway between the fill and the adjacent water bodies, groundwater from the fill should reach the wells in approximately 5 to 40 years.

3.2.2 Sediment Leachability and Existing Groundwater Quality

Over the period from March 1988 to October 1991, six rounds of groundwater samples were collected from the ten existing monitoring wells. These data are presented in Table 3-1. In addition, column leaching tests were performed on sediment samples collected from both the Blair and Sitcum waterways. The leaching tests were conducted by passing

water through the sediment column and collecting leachate samples for chemical analysis. The tests indicate the potential for long-term contaminant releases from dredged material. The results of the Sitcum leaching tests are summarized in the Phase 1 and Phase 2 Data Report (Port, 1992a), and the leaching test technical memorandum dated November 20, 1992 (Hart Crowser, 1992). Leaching tests for the Blair are summarized in Appendix H of the Evaluation Report (Port, 1992c) and in the November 20, 1992, technical memorandum (Hart Crowser, 1992).

The results of the Sitcum sediment column leaching tests were used to identify appropriate analytes for monitoring potential long-term water quality changes in groundwater adjacent to the Milwaukee Waterway nearshore disposal site. The concentrations of selected analytes, which were frequently detected in the leachate samples, are summarized in Table 3-2. All chemicals detected in more than 25 percent of the total number of leachate samples (18) are included in the Table 3-2 summary. Chemicals detected included 8 metals (antimony, arsenic, cadmium, copper, lead, mercury, nickel, and zinc), and 2 organic compounds (pentachlorophenol and bis(2-ethylhexyl)phthalate). Representative conventional parameters (i.e., salinity, organic carbon, and ammonia) are also included in the Table 3-2 summary. Although the results of Blair sediment leaching tests were not considered in the analysis, inclusion of the Blair tests would not change the analytes proposed for monitoring.

A summary of the baseline groundwater monitoring data is presented in Table 3-2 for comparison with the leachate data. Based on this comparison, the chemicals which occur at higher concentrations in the leachate (relative to baseline groundwater) include antimony, arsenic, copper, lead, and nickel.

3.3 Groundwater Sampling and Analysis

3.3.1 Monitoring Locations

The proposed long-term groundwater monitoring network consists of five existing wells and five new wells installed at nine locations on the peninsulas and land around the Milwaukee Waterway, and one well in the closure berm and one well in the fill (Figure 3-1).

Existing wells to be used in the network include monitoring wells MW-1, MW-1A, MW-4, MW-5, and MW-7. Existing monitoring wells MW-2, MW-3, MW-1, and MW-1A are all located slightly upgradient of the site. Monitoring wells MW-2 and MW-3 are not included in the long-term monitoring network but may be used for groundwater elevation measurements. MW-1 and MW-1A will serve as the upgradient monitoring wells for this monitoring program because they are paired wells

which are screened at a shallow depth (MW-1) and a deeper depth (MW-1A).

Seven new wells will be installed around and within the disposal site during and after construction. These include two wells (MW-8 and MW-9) on the peninsula between the Milwaukee Waterway and the Puyallup River, three wells (MW-11, MW-12, and MW-13) on the peninsula between the Milwaukee and Sitcum waterways, a well (MW-10) in the closure berm, and a well (MW-14) installed approximately in the middle of the fill. The locations of the new wells are shown on Figure 3-1.

The new monitoring wells located in the berm (MW-10) and the fill (MW-14) will be installed after the upland improvements (e.g., ballast, paving, drainage, and lighting) have been completed. This is anticipated to occur from 6 to 12 months following completion of the fill; however, additional time may be required. The fill well will be sampled only to provide additional data and will not be used to evaluate performance. Data collected will be used to verify the results of leaching tests and to calibrate additional transport analyses, as may be necessary.

The new wells will be constructed in a similar manner as the existing wells using 15-foot screens. The new wells will be screened approximately from -15 to -30 feet elevation (MLLW) as shown in subsurface profiles on Figure 3-8. The screens will be installed at elevations which take into account the contaminated sediments placed in the Milwaukee Waterway confined disposal site and soil conditions encountered during drilling, as well as the horizontal groundwater flow gradients to monitor potentially contaminated groundwater moving away from the fill. In addition, EPA will be consulted prior to final screen placement.

Collectively, these wells will provide groundwater samples representative of horizontal groundwater flow anticipated from the fill material toward the Sitcum Waterway, the mouth of the Milwaukee Waterway, and the Puyallup River.

After installation of the new wells, the Port will collect data to evaluate the horizontal groundwater flow regime. This data collection will include a 7-day program of continuous (every 15 minute) transducer-based water level measurements in all wells to evaluate the effects of tidal fluctuations on water levels. In addition, a water level measurement will be taken in each well within a one hour period to confirm the 7-day study. This will be done twice; once during wet-season and once during dry-season. The Port will evaluate the data and may propose to EPA for approval to no longer monitor certain wells that may be found to be upgradient of the fill.

Hydraulic conductivity testing of all new wells will be done by either slug testing or possibly time series analysis of water level response to tidal fluctuations. Should additional consolidation occur after paving and

installation of monitoring wells in the fill or berm, additional hydraulic conductivity testing of these wells may be done.

3.3.2 Monitoring Parameters

Groundwater samples collected during routine monitoring events will be analyzed for a series of field parameters, cations, anions, and metals, except for samples from well MW-14 in the fill which will be analyzed for the suite of constituents analyzed in the Sitcum leaching tests. Analyses will be performed in accordance with sampling procedures and quality assurance protocols presented in the Groundwater Sampling Operations Manual (Appendix A). The analytical parameters were selected based on an evaluation of sediment column leaching tests and the baseline groundwater quality data set.

The parameters proposed for long-term routine monitoring include most constituents detected in more than 25 percent of the leachate samples (Table 3-2). Two organic chemicals (pentachlorophenol and bis[2-ethylhexyl]phthalate), which were detected in more than 25 percent the leachate test samples, will not be analyzed. Specifically, pentachlorophenol was detected in only 8 of 18 leachate samples at a maximum concentration (0.95 μg/L) below surface water quality criteria (the most restrictive marine water quality criterion under 40 CFR 121-125, WAC 173-201 and WAC 173-340 is 5 μg/L). Additionally, pentachlorophenol is not considered a sediment quality issue for the Sitcum and Blair waterway sediments. Bis(2-ethylhexyl)phthalate is a common field and laboratory contaminant.

In addition to metals, the proposed long-term monitoring program includes determination of conventional field and inorganic parameters. The list of analytes proposed for analysis includes the following:

- Field Parameters (pH, Temperature, Turbidity, and Specific Conductance and Dissolved Oxygen. This list may be modified with EPA approval based on the results obtained during baseline monitoring;
- Major Cation and Anions; and
- Dissolved Metals (Arsenic, Copper, Lead, Manganese, Mercury, Nickel, and Zinc).

Analysis of metals is appropriate as the results of the leaching tests indicate that metals are the most mobile chemicals leached. Therefore, metals will serve as indicators of contaminant migration from the nearshore disposal site.

Although cadmium was detected in more than 25 percent of the leaching test samples, the average concentrations detected were less than those

detected in baseline groundwater results and, therefore, will not be analyzed. Antimony will not be analyzed because of matrix interference, which has resulted in highly qualified data in previous stages of this project, and concentrations detected in the leaching tests were well below marine chronic criteria.

If analysis of groundwater samples from well MW-14 in the fill indicate significantly different constituents or concentrations than those observed in the leaching test results, the Port may propose for EPA approval whether to increase the list of analytes for routine monitoring.

Analytical methods and detection limit goals for routine groundwater monitoring and for samples taken from well MW-14 in the fill are given in Tables 3-3 and 3-4, respectively.

3.3.3 Baseline Conditions

Examination of historical data collected from the existing wells suggest that groundwater quality varies by both location and depth, and therefore, comparisons with baseline data will need to be made on an intra-well basis. Examination of existing historical data does not show wet season/dry season concentration variations in groundwater quality; however, historical data to date are insufficient to confirm this statistically. In general, more constituents are detected in wet season samples.

To better establish a baseline of groundwater quality for existing wells and to establish baseline groundwater quality in new monitoring wells, and to confirm the lack of wet season/dry season groundwater quality trends, the following baseline monitoring program will be implemented:

- New wells will be sampled quarterly until a sufficient number of samples have been obtained to establish a statistically significant baseline (see Section 3.4.2); and

- Existing wells will be sampled semi-annually to supplement existing baseline data until a sufficient number of samples have been obtained to establish a statistically significant baseline (see Section 3.4.2).

The baseline monitoring period will end when the Port and EPA agree that statistically significant baseline conditions have been established in the wells. It is anticipated that this would take approximately two years. Additional samples may be required if the first 8 samples indicate seasonality. Although this baseline will be established after construction, average groundwater velocities are such that groundwater moving from the fill would not reach the wells until after the baseline monitoring is complete. The monitoring well installed in the fill will be sampled twice a year for the first two years.

3.4 Stage 1 Groundwater Monitoring

The primary focus of Stage 1 monitoring is to compare post-construction groundwater quality to baseline conditions. This stage of monitoring will provide information to determine if constituents are being leached from the fill material and horizontally transported outside the fill area in groundwater.

Stage 1 groundwater quality monitoring will involve:

- Sampling of groundwater for selected analytes identified in Table 3-3 in the existing and new monitoring wells around the Milwaukee Waterway nearshore disposal site; and
- Statistical comparison of sampling results to baseline conditions to assess changes in groundwater quality.

The Stage 1 decision framework is depicted on Figure 3-2.

3.4.1 Monitoring Schedule

After completion of the baseline sampling program (Section 3.3.3), initial Stage 1 groundwater quality monitoring will be conducted on an annual basis, commencing one year after baseline sampling is completed. Given the estimated hydraulic travel times between the fill and the monitoring wells (5 to 40 years), this sampling schedule is sufficient for detecting potential changes in groundwater quality during Stage 1. These travel time estimates assume advective groundwater flow, which does not account for the adsorption/desorption affects that are expected to further slow constituent migration.

As discussed above, examination of data suggests a lack of wet season/dry season variation in concentrations. This is further supported by low groundwater velocities and observations of regional groundwater quality fluctuations. However, existing baseline data suggest there is a tendency for more constituents to be detected during wet season sampling. Therefore, routine monitoring will occur within the period from November to June as the detection frequency may be higher during the wet season. If future baseline sampling results indicate different trends than existing results, the Port may propose, and EPA will determine, to adjust to a more appropriate monitoring schedule. Based on the results of annual groundwater monitoring, the Port may propose, and EPA will determine, whether to require monitoring at a reduced frequency.

3.4.2 Statistical Methods

Appropriate procedures for statistical interpretation of groundwater monitoring data are described in EPA's Interim Final Guidance document entitled "Statistical Analysis of Ground-Water Monitoring Data at RCRA Facilities" (EPA, 1989). For situations where significant differences occur between wells with a sufficiently comprehensive baseline data set, which is the case here, construction of a Shewhart-CUSUM control chart for each well is recommended for monitoring analyte levels over time. The control chart procedure is explained in detail in Section 7 of the EPA document.

Specific procedures proposed for the statistical analysis include the following:

- Examination of existing baseline data suggests that concentrations of each analyte are approximated by the log-normal distribution, therefore, all analyte data will be log-transformed prior to statistical analysis;

- Examination of data, coupled with low groundwater velocities suggests a lack of wet season/dry season variations, which will be able to be confirmed during post-construction baseline sampling. Therefore, if confirmed, adjustments for wet season/dry season variation will not be necessary;

- After post-construction baseline sampling, serial correlation between sampling events will be analyzed to confirm the independence of the data sets; and

- Standard statistical parameters for the Shewhart-CUSUM control chart will include the following: "h" (decision internal value) = 5; "k" (reference value) = 1; "SCL" (Shewhart control limit) = 4.5. These values are generally regarded as most appropriate for the application of combined Shewhart-CUSUM charts to groundwater monitoring (Starks, 1988; EPA, 1989).

If the results of these analyses indicate no statistically significant increase in analyte concentrations at a given monitoring well, Stage 1 groundwater quality monitoring will continue on an annual or less than annual basis, as proposed by the Port and determined by EPA. However, if statistically significant increases do occur, the Port will evaluate the data and propose to EPA to either continue with Stage 1 or to move to Stage 2. EPA will make a final determination based on a review of the Port's proposal.

3.5 Stage 2 Groundwater Monitoring

Stage 2 groundwater monitoring is designed to assess whether the increase in concentrations of analytes above baseline, identified in Stage 1, is an

anomaly or the result of a contaminant plume moving from the nearshore disposal site. Stage 2 actions to answer this question include but are not limited to the following:

- Installation of additional monitoring wells around the existing well(s) of concern;
- Refinement of existing groundwater transport analyses; and
- Establishment of Stage 2 threshold criteria.

The decision framework for Stage 2 is depicted on Figure 3-3.

3.5.1 Installation of Additional Monitoring Wells

At least two new wells will be installed to identify and evaluate the magnitude of concentration gradients around the well of concern. One well will be located between the existing well and the nearshore disposal site and the other well will be installed between the existing well and downgradient surface water. The Port may install additional wells around the existing monitoring well to assess the lateral and vertical extent of potential contaminant plumes.

The Port will evaluate the data and propose to EPA the number, location, and depth of any new wells in this stage. EPA will review the Port's proposal and make a determination regarding the monitoring wells.

3.5.2 Refinement of Transport Analyses

Groundwater transport analyses were done previously to assess potential impacts of filling the Milwaukee Waterway on surface water. Discussion of transport analyses and results are in the design calculations document which is part of the remedial design plans and specifications. The analyses were based on typical site conditions and did not consider in detail the effects of chemical reactions, tidal mixing, and dilution of groundwater at the surface water/aquifer interface.

If Stage 2 of the groundwater monitoring program is reached, the transport analyses will be refined to include localized groundwater conditions and the transport parameters mentioned above. The analyses will consider the monitoring data collected and will be used to assess potential impacts to surface water and establish threshold criteria for Stage 2.

3.5.3 Stage 2 Threshold Criteria

The Port will use the results of groundwater monitoring and refined transport analyses to propose Stage 2 threshold criteria to EPA. The criteria may be based on monitoring to determine if concentrations of selected analytes statistically increase (see Section 3.4.2) above baseline. Stage 2 threshold criteria will be proposed such that exceedence of the criteria would not indicate an exceedence of performance standards at the point of compliance and would allow sufficient time for implementation of Stage 3 monitoring or contingency planning, if necessary. EPA will review the Port's proposal and make the final determination of Stage 2 threshold criteria.

3.5.4 Data Analysis

Groundwater quality data from the Stage 2 monitoring program will be evaluated to determine if elevated concentrations of analytes in groundwater are point anomalies or if they appear to be areal in extent. The data will also be analyzed over time to evaluate if the groundwater impacts are transient or long-term.

Methods of analyses may include statistical evaluation of the data, evaluation of transport analysis results, and comparison to threshold criteria depending on the groundwater quality data generated.

If the analysis indicates the potential existence of a plume, and the Stage 2 monitoring well(s) indicate concentrations of selected analytes in groundwater exceed Stage 2 threshold criteria, the Port will evaluate the data and propose to EPA either to continue with Stage 2 or to move to Stage 3. EPA will make a final determination based on a review of the Port's proposal.

3.6 Stage 3 Groundwater Monitoring

Stage 3 is designed to assess the potential for exceedence of performance standards at the point of compliance. Stage 3 monitoring would include but not be limited to the following:

- Further refinement of transport analyses;
- Installation of sentinel well(s) near the surface water;
- Sampling of surface water for ambient water quality; and
- Site-specific study of tidal mixing and dilution at the point of compliance.

It may be necessary to re-evaluate analytical methods and detection limits at this time.

Figure 3-4 shows the Stage 3 decision framework.

3.6.2 Refinement of Transport Analyses

Data collected during Stage 2 monitoring will be used to further refine transport analyses. The analyses will be used to assess the potential for impacts to surface water and to optimize the location of the sentinel well(s). The analyses may also be used to assess the effects of tidal mixing in the aquifer and mixing with surface waters at the sediment-water interface.

3.6.3 Installation of Sentinel Well(s)

The sentinel well or wells will provide early warning of potential impacts to adjacent surface water. The results of the Stage 3 transport analyses will be used to optimize the location of the well(s) such that exceedence of threshold criteria at the sentinel well(s) would not indicate an exceedence of performance standards at the point of compliance and would allow sufficient time for implementation of contingency actions if deemed necessary. The Port will evaluate the data and propose to EPA the number and location of sentinel wells. EPA will review the Port's proposal and determine the appropriate action for installation of the well(s).

3.6.4 Surface Water Sampling

Sampling of surface water will be done at the beginning of Stage 3 to evaluate ambient surface water quality. The results of this sampling and analysis will be used to establish performance standards (see Section 3.1). Prior to surface water sampling, the Port will submit for EPA approval a surface water sampling and analysis plan.

3.6.5 Stage 3 Threshold Criteria

Stage 3 threshold criteria will be implemented at the sentinel well(s). The threshold criteria will be marine chronic criteria or ambient surface water quality in adjacent surface water (whichever is greater). Exceedence of the threshold criteria at the sentinel well does not imply exceedence of the performance standards because tidal mixing and tidal dilution will cause exit concentrations to be below the concentrations measured at the sentinel well. This affect was discussed in the modeling described in Section J of the Sitcum Waterway Remediation Project, Remedial Design Calculations Document.

3.6.6 Evaluation of Tidal Mixing and Tidal Dilution

To assess the potential for impacts to surface water, the Port will study the processes of tidal mixing and tidal dilution near the sediment/surface water interface. This study may include numerical simulation of tidal mixing and statistical analysis of salinity sampling results over a tidal cycle. Prior to the study, the Port will propose for EPA approval a plan describing the details of the tidal mixing and dilution study.

3.6.7 Exceedence of Threshold Criteria

Exceedence of threshold criteria at the sentinel well(s) would indicate that the contaminant plume has migrated near the surface water. Should an exceedence occur, the Port may elect to perform appropriate bioassays during Stage 3 to evaluate potential environmental impacts to surface water. The Port will evaluate all data collected and propose to EPA whether or not to shift to contingency plans. EPA will review the Port's proposal and will make the final determination whether to shift to contingency plans.

3.7 Contingency Plan

As indicated above, if Stage 3 groundwater threshold criteria are exceeded, there is a potential for impacts to adjacent surface water and EPA may determine that it is appropriate for the monitoring program to shift to the contingency plan.

The specific problem that causes the shift to contingency plans will dictate what actions may be most appropriate. Actions may include but will not be limited to the following:

- Further study of specific problem;
- Performance of bioassays to evaluate environmental impacts; and
- Implementation of remediation techniques such as in-ground barriers, bioremediation, groundwater pumping and treatment or reinjection, or other appropriate remediation technologies.

It should be noted that although implementation of each stage is designed to occur sequentially, a shift to the contingency plan may occur from any of the monitoring stages if data collected indicate such a shift is appropriate.

3.8 Schedule for Monitoring and Reporting

The water quality monitoring master schedule is shown on Figure 2-1. The schedule shows the time relationship between various activities for the water quality monitoring program.

Installation of new monitoring wells for Stage 1 monitoring will occur during construction of the nearshore confined fill except for the wells in the berm and the fill. The new monitoring wells located in the berm and the fill will be installed after the upland improvements (e.g. ballast, paving, and lighting) have been completed. This is anticipated to occur 6 to 12 months following completion of the fill,however, additional time may be required.

Baseline monitoring for each new well will begin immediately after installation. During the baseline monitoring period (see Section 3.3.3), the Port will prepare and submit a report describing the construction of the new wells. Sampling data will be provided to EPA within 60 days after a sampling event. The Port will also provide annual reports of the results of groundwater elevation and chemistry data. Should circumstances dictate a change in this reporting schedule, the Port will propose a refined schedule to EPA. EPA will review the Port's proposal and make a final determination on the schedule.

Schedules for other actions that may occur as a result of shifting to different stages of monitoring will be proposed to EPA by the Port at the beginning of that stage of monitoring. EPA will review the Port's proposal and make the final determination of the schedule.

320308\OMMP.FR

Table 3-1 - Milwaukee Waterway Historical Groundwater Quality Data

Sample-ID	2013: MW-1	MW-1	MW-1/S-1	MW-1	MW-1
Location	MW-1	MW-1	MW-1	MW-1	MW-1
Sample Date	3/08/88	6/21/89	10/04/89	9/12/90	2/28/91
Conventionals in mg/L (unless otherwise noted)					
Calcium in µg/L	50000	35000	40000	38000	33000
Bicarb Alkalinity as CaCO3	1 U	540	540	440	390
Chloride	120	71	100	100	93
Magnesium in µg/L	66000	74000	59000	44000	35000
Sodium in µg/L	150000	220000	150000	140000	120000
Potassium in µg/L					
Ammonia as N in ppm	1.7	1.4	1.5	0.79	0.79
pH					
Salinity in ppt	0.3	0.41	0.3	0.35	0.31
Sulfide in ppm					
Sulfate					
Total Phosphate as P					
Total Alkalinity					
Total Dissolved Solids	840	740	800 B	703	620
Total Suspended Solids					
Total Organic Carbon	12	24	14	12	13
Total Solids in Percent					
Total Volatile Solids in Percent					
Specific Conductance					
Metals in µg/L (ppb)					
Antimony	5 U	5 U	10 U	20 U	6 U
Arsenic	5 U	5 U	5 U	5 U	5 U
Barium	10	10	17	8	6
Beryllium	1 U	1 U	1 U	5 U	1 U
Cadmium	1 U	1 U	1 U	5 U	1 U
Chromium	1	1 U	2	10 U	1 U
Copper	2	1 U	3 B	2.9 U	1 U
Iron	580	530	5 U	470	350
Lead	5 U	5 U	5 U	3 U	3 U
Manganese	620	550	170	440	350
Mercury	1 U	1 U	1 U	1 U	1 U
Nickel	2 U	2 U	2 U	7.1 U	2 U
Selenium	5 U	5 U	5 U	5 U	5 U
Silver	1 U	1 U	1 U	5 U	1 U
Thallium	5 U	5 U	5 U	2 U	2 U
Zinc	7	4	1 U	10 U	2
Low Molecular Weight PAHs in µg/L (ppb)					
2-Methylnaphthalene	2 U	2 U	2 U	2 U	1 U
Acenaphthene	2 U	2 U	2 U	2 U	1 U
Acenaphthylene	2 U	2 U	2 U	2 U	1 U
Anthracene	2 U	2 U	2 U	2 U	1 U
Fluorene	2 U	2 U	2 U	2 U	1 U
Phenanthrene	2 U	2 U	2 U	2 U	1 U
Naphthalene	5 U	4 U	4 U	2 U	1 U
Total LPAHs					

Table 3-1 - Milwaukee Waterway Historical Groundwater Quality Data

Sample-ID	2013: MW-1	MW-1	MW-1/S-1	MW-1	MW-1
Location	MW-1	MW-1	MW-1	MW-1	MW-1
Sample Date	3/08/88	6/21/89	10/04/89	9/12/90	2/28/91
High Molecular Weight PAHs in µg/L (ppb)					
Benzo(g,h,i)Perylene	5 U	4 U	4 U	2 U	1 U
Benzo(a)Anthracene	2 U	2 U	2 U	2 U	1 U
Benzo(a)Pyrene	5 U	4 U	4 U	2 U	1 U
Chrysene	2 U	2 U	2 U	2 U	1 U
Dibenzo(a,h)Anthracene	5 U	4 U	4 U	2 U	1 U
Fluoranthene	2 U	2 U	2 U	2 U	1 U
Indeno(1,2,3-c,d)Pyrene	5 U	4 U	4 U	2 U	1 U
Pyrene	2 U	2 U	2 U	2 U	1 U
Total Benzofluoranthenes					
Total HPAHs					
Phthalates in µg/L (ppb)					
Butyl Benzyl Phthalate	2 U	2 U	2 U	2 U	1 U
Bis(2-Ethylhexyl) Phthalate	7 B	2	2 U	2 U	1 U
Di-n-Butyl Phthalate	2 U	2 U	2 U	2 U	1 U
Di-n-Octyl Phthalate	2 U	2	2 U	2 U	1 U
Diethyl Phthalate	2 U	2 U	2 U	2 U	1 U
Dimethyl Phthalate	2 U	2 U	2 U	2 U	1 U
Phenols in µg/L (ppb)					
2,4-Dimethylphenol	2 U	2 U	2 U	2 U	1 U
2-Methylphenol	2 U	2 U	2 U	2 U	1 U
4-Methylphenol	2 U	2 U	2 U	2 U	1 U
Pentachlorophenol	25 U	20 U	20 U	20 U	10 U
Phenol	2 U	2 U	2 U	2 U	1 U
Semivolatiles in µg/L (ppb)					
1,2,4-Trichlorobenzene	2 U	2 U	2 U	2 U	1 U
1,2-Dichlorobenzene	2 U	2 U	2 U	2 U	1 U
1,3-Dichlorobenzene	2 U	2 U	2 U	2 U	1 U
1,4-Dichlorobenzene	2 U	2 U	2 U	2 U	1 U
Hexachlorobenzene	5 U	4 U	4 U	4 U	2 U
Hexachlorobutadiene	2 U	2 U	2 U	2 U	1 U
N-Nitroso-Diphenylamine	2 U	2 U	2 U	2 U	1 U
Benzyl Alcohol	2 U	2 U	2 U	2 U	1 U
Benzoic Acid	62 U	50 U	50 U	50 U	25 U
Dibenzofuran	2 U	2 U	2 U	2 U	1 U
N-nitroso-di-n-propylamine	2 U	2 U	2 U	2 U	1 U
4-chloro-m-cresol	5 U	4 U	4 U		
4,6-dinitro-o-cresol	25 U	20 U	20 U		
Volatiles in µg/L (ppb)					
Ethylbenzene	1 U	1 U	1 U	1 U	1 U
Dibromochloromethane	2.5 U	3 U	3 U	3 U	3 U
Tetrachloroethene				1 U	1 U
Total Xylenes	1 U	1 U	1 U	1 U	1 U
Total-1,2-Dichloroethene	1 U	1 U	1 U	1 U	1 U

Table 3-1 - Milwaukee Waterway Historical Groundwater Quality Data

Sample-ID	102291-01	102291-02	9305569-01	9305569-02	2013: MW-1
Location	MW-1	MW-1	MW-1T	MW-1D	MW-1A
Sample Date	10/22/91	10/22/91	5/11/93	5/11/93	3/08/88
Conventionals in mg/L					
(unless otherwise noted)					
Calcium in µg/L			30900	31800	8800
Bicarb Alkalinity as CaCO3	400	400		370	1 U
Chloride	100	91		99	170
Magnesium in µg/L			27600 J	27700 J	15000
Sodium in µg/L			124000 J	127000 J	580000
Potassium in µg/L			26500	26500	
Ammonia as N in ppm	0.74	0.72			2
pH			7.7		
Salinity in ppt	0.32 J	0.28 J	0.35		0.48
Sulfide in ppm	1 UJ	1 UJ		1 U	
Sulfate				10 U	
Total Phosphate as P				1.2	
Total Alkalinity				370	
Total Dissolved Solids	660	650	590		740
Total Suspended Solids			7		
Total Organic Carbon	11	13	15		18
Total Solids in Percent					
Total Volatile Solids in Percent					
Specific Conductance			980		
Metals in µg/L (ppb)					
Antimony	3.2	1.9 U	5 U	5 U	5 U
Arsenic	1 U	1 UJ	3 U	3 U	5 U
Barium	6 U	5.8 U			25
Beryllium	0.1 U	0.1 U			1 U
Cadmium	0.4 U	0.4 U			1 U
Chromium	2.8	2.4			2
Copper	1.1 U	1.1 U		0.4 U	3
Iron	298	327			200
Lead	1 U	1 U	1 UJ	1 UJ	5 U
Manganese	314	320		267	19
Mercury	0.2 U	0.2 U			1 U
Nickel	0.3 U	0.3 U		0.6 U	4
Selenium	10 R	10 R			5 U
Silver	0.3 U	0.3 U			1 U
Thallium	2 UJ	2 UJ			5 U
Zinc	0.2 U	0.96 U		6.9 U	5
Low Molecular Weight PAHs in µg/L (ppb)					
2-Methylnaphthalene	1 U	1 U			2 U
Acenaphthene	1 U	1 U			2 U
Acenaphthylene	1 U	1 U			2 U
Anthracene	1 U	1 U			2 U
Fluorene	1 U	1 U			2 U
Phenanthrene	1 U	1 U			2 U
Naphthalene	1 U	1 U			4 U
Total LPAHs					

Table 3-1 - Milwaukee Waterway Historical Groundwater Quality Data

Sample-ID	102291-01	102291-02	9305569-01	9305569-02	2013: MW-1
Location	MW-1	MW-1	MW-1T	MW-1D	MW-1A
Sample Date	10/22/91	10/22/91	5/11/93	5/11/93	3/08/88
High Molecular Weight PAHs in µg/L (ppb)					
Benzo(g,h,i)Perylene	1 U	1 U			4 U
Benzo(a)Anthracene	1 U	1 U			2 U
Benzo(a)Pyrene	1 U	1 U			4 U
Chrysene	1 U	1 U			2 U
Dibenzo(a,h)Anthracene	1 U	1 U			4 U
Fluoranthene	1 U	1 U			2 U
Indeno(1,2,3-c,d)Pyrene	1 U	1 U			4 U
Pyrene	1 U	1 U			2 U
Total Benzofluoranthenes					
Total HPAHs					
Phthalates in µg/L (ppb)					
Butyl Benzyl Phthalate	1 U	1 U			2 U
Bis(2-Ethylhexyl) Phthalate	92 R	1			2 B
Di-n-Butyl Phthalate	1 U	1 U			2 U
Di-n-Octyl Phthalate	1 U	1 U			2 U
Diethyl Phthalate	1 U	1 U			2 U
Dimethyl Phthalate	1 U	1 U			2 U
Phenols in µg/L (ppb)					
2,4-Dimethylphenol	1 U	1 U			2 U
2-Methylphenol	1 U	1 U			2 U
4-Methylphenol	1 U	1 U			2 U
Pentachlorophenol	10 U	10 U			20 U
Phenol	1 U	1 U			2 U
Semivolatiles in µg/L (ppb)					
1,2,4-Trichlorobenzene	1 U	1 U			2 U
1,2-Dichlorobenzene	1 U	1 U			2 U
1,3-Dichlorobenzene	1 U	1 U			2 U
1,4-Dichlorobenzene	1 U	1 U			2 U
Hexachlorobenzene	2 U	2 U			4 U
Hexachlorobutadiene	1 U	1 U			2 U
N-Nitroso-Diphenylamine	1 U	1 U			2 U
Benzyl Alcohol	1 U	1 U			2 U
Benzoic Acid	1 U	1 U			50 U
Dibenzofuran	1 U	1 U			2 U
N-nitroso-di-n-propylamine	1 U	1 U			2 U
4-chloro-m-cresol					4 U
4,6-dinitro-o-cresol					20 U
Volatiles in µg/L (ppb)					
Ethylbenzene	1 U	1 U			1 U
Dibromochloromethane	1 U	1 U			2.5 U
Tetrachloroethene	1 U	1 U			
Total Xylenes	1 U	1 U			1 U
Total-1,2-Dichloroethene	1 U	1 U			1 U

Table 3-1 - Milwaukee Waterway Historical Groundwater Quality Data

Sample-ID	MW-1A	MW-1A/S-1	MW-1A	MW-1A	102591-01
Location	MW-1A	MW-1A	MW-1A	MW-1A	MW-1A
Sample Date	6/21/89	10/04/89	9/12/90	2/28/91	10/25/91
Conventionals in mg/L (unless otherwise noted)					
Calcium in µg/L	4000	6000	5500	5500	
Bicarb Alkalinity as CaCO3	500	820	820	820	1100
Chloride	210	290	480	440	370
Magnesium in µg/L	19000	17000	17000	19000	
Sodium in µg/L	510000	670000	560000	50000	
Potassium in µg/L					
Ammonia as N in ppm	2.2	2.1	1.1	1	0.85
pH					
Salinity in ppt	0.88	0.7	1.02	1	0.82 J
Sulfide in ppm					1 UJ
Sulfate					
Total Phosphate as P					
Total Alkalinity					
Total Dissolved Solids	1600	1500 B	1700	1700	1600
Total Suspended Solids					
Total Organic Carbon	34	25	19	22	35
Total Solids in Percent					
Total Volatile Solids in Percent					
Specific Conductance					
Metals in µg/L (ppb)					
Antimony	5 U	10 U	25 U	6 U	1.9 U
Arsenic	5 U	5 U	5 U	5 U	1 U
Barium	30	26	29	32	24.6
Beryllium	1 U	1 U	5 U	1 U	0.1 U
Cadmium	1 U	1 U	5 U	1 U	0.4 U
Chromium	1	1	10 U	2	1.8
Copper	1 U	4 B	2.9 U	1 U	1.1 U
Iron	230	5 U	260	270	247
Lead	5 U	5 U	10 U	4.8	1 U
Manganese	17	11	17	17	14
Mercury	1 U	1 U	1 U	1 U	0.2 U
Nickel	2 U	2 U	7.1 U	2 U	1.5 U
Selenium	5 U	5 U	5 U	5 U	10 R
Silver	1 U	1 U	5 U	1 U	0.3 U
Thallium	5 U	5 U	20 U	2 U	2 UJ
Zinc	6	1 U	10 U	2	0.2 U
Low Molecular Weight PAHs in µg/L (ppb)					
2-Methylnaphthalene	3 U	2 U	2 U	1 U	1 U
Acenaphthene	3 U	2 U	2 U	1 U	1 U
Acenaphthylene	3 U	2 U	2 U	1 U	1 U
Anthracene	3 U	2 U	2 U	1 U	1 U
Fluorene	3 U	2 U	2 U	1 U	1 U
Phenanthrene	3 U	2 U	2 U	1 U	1 U
Naphthalene	5 U	4 U	2 U	1 U	1 U
Total LPAHs					

Table 3-1 - Milwaukee Waterway Historical Groundwater Quality Data

Sample-ID	MW-1A	MW-1A/S-1	MW-1A	MW-1A	102591-01
Location	MW-1A	MW-1A	MW-1A	MW-1A	MW-1A
Sample Date	6/21/89	10/04/89	9/12/90	2/28/91	10/25/91
High Molecular Weight PAHs in µg/L (ppb)					
Benzo(g,h,i)Perylene	5 U	4 U	2 U	1 U	1 U
Benzo(a)Anthracene	3 U	2 U	2 U	1 U	1 U
Benzo(a)Pyrene	5 U	4 U	2 U	1 U	1 U
Chrysene	3 U	2 U	2 U	1 U	1 U
Dibenzo(a,h)Anthracene	5 U	4 U	2 U	1 U	1 U
Fluoranthene	3 U	2 U	2 U	1 U	1 U
Indeno(1,2,3-c,d)Pyrene	5 U	4 U	2 U	1 U	1 U
Pyrene	3 U	2 U	2 U	1 U	1 U
Total Benzofluoranthenes					
Total HPAHs					
Phthalates in µg/L (ppb)					
Butyl Benzyl Phthalate	3 U	2 U	2 U	1 U	1 U
Bis(2-Ethylhexyl) Phthalate	7	2 U	3 B	1 U	1 U
Di-n-Butyl Phthalate	3 U	2 U	2 U	1 U	1 U
Di-n-Octyl Phthalate	3 U	2 U	2 U	1 U	1 U
Diethyl Phthalate	3 U	2 U	2 U	1 U	1 U
Dimethyl Phthalate	3 U	2 U	2 U	1 U	1 U
Phenols in µg/L (ppb)					
2,4-Dimethylphenol	3 U	2 U	2 U	1 U	1 U
2-Methylphenol	3 U	2 U	2 U	1 U	1 U
4-Methylphenol	3 U	2 U	2 U	1 U	1 U
Pentachlorophenol	27 U	20 U	20 U	10 U	10 U
Phenol	3 U	2 U	2 U	1 U	1 U
Semivolatiles in µg/L (ppb)					
1,2,4-Trichlorobenzene	3 U	2 U	2 U	1 U	1 U
1,2-Dichlorobenzene	3 U	2 U	2 U	1 U	1 U
1,3-Dichlorobenzene	3 U	2 U	2 U	1 U	1 U
1,4-Dichlorobenzene	3 U	2 U	2 U	1 U	1 U
Hexachlorobenzene	5 U	4 U	4 U	2 U	2 U
Hexachlorobutadiene	3 U	2 U	2 U	1 U	1 U
N-Nitroso-Diphenylamine	3 U	2 U	2 U	1 U	1 U
Benzyl Alcohol	3 U	2 U	2 U	1 U	1 U
Benzoic Acid	67 U	50 U	50 U	25 U	25 UJ
Dibenzofuran	3 U	2 U	2 U	1 U	1 U
N-nitroso-di-n-propylamine	3 U	2 U	2 U	1 U	1 U
4-chloro-m-cresol	5 U	4 U			
4,6-dinitro-o-cresol	27 U	20 U			
Volatiles in µg/L (ppb)					
Ethylbenzene	1 U	1 U	1 U	1 U	1 U
Dibromochloromethane	3 U	3 U	3 U	3 U	1 U
Tetrachloroethene			1 U	1 U	1 U
Total Xylenes	1 U	1 U	1 U	1 U	1 U
Total-1,2-Dichloroethene	1 U	1 U	1 U	1 U	1 U

Table 3-1 - Milwaukee Waterway Historical Groundwater Quality Data

Sample-ID	9305569-03	9305569-04	MW-2	MW-2/S-1	MW-2/S-2
Location	MW-1A	MW-1A	MW-2	MW-2	MW-2
Sample Date	5/11/93	5/11/93	6/22/89	10/05/89	10/05/89
Conventionals in mg/L					
(unless otherwise noted)					
Calcium in µg/L		5360	6400	10000	10000
Bicarb Alkalinity as CaCO3		790	250	290	270
Chloride		450	14	14	12
Magnesium in µg/L		18300 J	33000	46000	45000
Sodium in µg/L		576000 J	66000	56000	52000
Potassium in µg/L		26000			
Ammonia as N in ppm			1.1	1.2	1.3
pH	8.2				
Salinity in ppt	1.03		0.2 U	0.3	0.1 U
Sulfide in ppm		1 U			
Sulfate		10 U			
Total Phosphate as P		3			
Total Alkalinity		790			
Total Dissolved Solids	1700		370	380 B	380 B
Total Suspended Solids	5				
Total Organic Carbon	24		11	5	5.6
Total Solids in Percent					
Total Volatile Solids in Percent					
Specific Conductance	2900				
Metals in µg/L (ppb)					
Antimony		5 U	5 U	10 U	10 U
Arsenic		3 U	5 U	5 U	5 U
Barium			31	33	31
Beryllium			1 U	1 U	1 U
Cadmium			1 U	1 U	1 U
Chromium			1 U	1	1 U
Copper		4 U	2	5 B	4 B
Iron			740	320 B	280 B
Lead		1 UJ	5 U	5 U	5 U
Manganese		14.4	89	54	53
Mercury			1 U	1 U	1 U
Nickel		6 U	2 U	2 U	2 U
Selenium			5 U	5 U	5 U
Silver			1 U	1 U	1 U
Thallium			5 U	5 U	5 U
Zinc		14 U	38	11 B	11 B
Low Molecular Weight PAHs in µg/L (ppb)					
2-Methylnaphthalene			2 U	2 U	2 U
Acenaphthene			2 U	2 U	2 U
Acenaphthylene			2 U	2 U	2 U
Anthracene			2 U	2 U	2 U
Fluorene			2 U	2 U	2 U
Phenanthrene			2 U	2 U	2 U
Naphthalene			4 U	4 U	4 U
Total LPAHs					

Table 3-1 - Milwaukee Waterway Historical Groundwater Quality Data

Sample-ID	9305569-03	9305569-04	MW-2	MW-2/S-1	MW-2/S-2
Location	MW-1A	MW-1A	MW-2	MW-2	MW-2
Sample Date	5/11/93	5/11/93	6/22/89	10/05/89	10/05/89
High Molecular Weight PAHs in µg/L (ppb)					
Benzo(g,h,i)Perylene			4 U	4 U	4 U
Benzo(a)Anthracene			2 U	2 U	2 U
Benzo(a)Pyrene			4 U	4 U	4 U
Chrysene			2 U	2 U	2 U
Dibenzo(a,h)Anthracene			4 U	4 U	4 U
Fluoranthene			2 U	2 U	2 U
Indeno(1,2,3-c,d)Pyrene			4 U	4 U	4 U
Pyrene			2 U	2 U	2 U
Total Benzofluoranthenes					
Total HPAHs					
Phthalates in µg/L (ppb)					
Butyl Benzyl Phthalate			2 U	2 U	2 U
Bis(2-Ethylhexyl) Phthalate			2 U	3	2 U
Di-n-Butyl Phthalate			2 U	2 U	2 U
Di-n-Octyl Phthalate			2 U	2 U	2 U
Diethyl Phthalate			2 U	2 U	2 U
Dimethyl Phthalate			2 U	2 U	2 U
Phenols in µg/L (ppb)					
2,4-Dimethylphenol			2 U	2 U	2 U
2-Methylphenol			2 U	2 U	2 U
4-Methylphenol			2 U	2 U	2 U
Pentachlorophenol			20 U	20 U	20 U
Phenol			2 U	2 U	2 U
Semivolatiles in µg/L (ppb)					
1,2,4-Trichlorobenzene			2 U	2 U	2 U
1,2-Dichlorobenzene			2 U	2 U	2 U
1,3-Dichlorobenzene			2 U	2 U	2 U
1,4-Dichlorobenzene			2 U	2 U	2 U
Hexachlorobenzene			4 U	4 U	4 U
Hexachlorobutadiene			2 U	2 U	2 U
N-Nitroso-Diphenylamine			2 U	2 U	2 U
Benzyl Alcohol			2 U	2 U	2 U
Benzoic Acid			50 U	50 U	50 U
Dibenzofuran			2 U	2 U	2 U
N-nitroso-di-n-propylamine			2 U	2 U	2 U
4-chloro-m-cresol			4 U	4 U	4 U
4,6-dinitro-o-cresol			20 U	20 U	20 U
Volatiles in µg/L (ppb)					
Ethylbenzene			1 U	1 U	1 U
Dibromochloromethane			3 U	3 U	3 U
Tetrachloroethene					
Total Xylenes			1 U	1 U	1 U
Total-1,2-Dichloroethene			1 U	1 U	1 U

Table 3-1 - Milwaukee Waterway Historical Groundwater Quality Data

Sample-ID	MW-2	MW-2D	MW-2	102391-02	102391-03
Location	MW-2	MW-2	MW-2	MW-2	MW-2
Sample Date	9/13/90	9/13/90	3/01/91	10/23/91	10/23/91
Conventionals in mg/L					
(unless otherwise noted)					
Calcium in µg/L	6500	6700	5000		
Bicarb Alkalinity as CaCO3	250	250	260	260	260
Chloride	13	12	12	13	14
Magnesium in µg/L	22000	22000	18000		
Sodium in µg/L	72000	71000	80000		
Potassium in µg/L					
Ammonia as N in ppm	0.86	0.84	0.76	0.73	0.72
pH					
Salinity in ppt	0.2 U	0.2 U	0.1	0.21 J	0.1 J
Sulfide in ppm				1 UJ	1 UJ
Sulfate					
Total Phosphate as P					
Total Alkalinity					
Total Dissolved Solids	350	380	370	460	420
Total Suspended Solids					
Total Organic Carbon	7.3	7.6	8.8	7.9	8.7
Total Solids in Percent					
Total Volatile Solids in Percent					
Specific Conductance					
Metals in µg/L (ppb)					
Antimony	20 U	20 U	6 U	1.9 U	2.9
Arsenic	5 U	5 U	5 U	2.6 J	2.5 J
Barium	29	29	74	22 U	21.9 U
Beryllium	5 U	5 U	1 U	0.1 U	0.1 U
Cadmium	5 U	5 U	1 U	0.4 U	0.4 U
Chromium	10 U	10 U	9	2.4	2
Copper	6.5	6	20	8.7	8.7
Iron	770	790	1000	582	554
Lead	3 U	3 U	3 U	2.6 B	1.5
Manganese	77	77	240	56.3	55.2
Mercury	1 U	1 U	1.1	0.2 U	0.2 U
Nickel	7.1 U	7.1 U	29	1.1 U	0.96 U
Selenium	5 U	5 U	5 U	10 R	10 R
Silver	5 U	5 U	4	0.3 U	0.3 U
Thallium	2 U	2 U	2 U	2 J	2 J
Zinc	10 U	10 U	49	0.2 U	0.32 U
Low Molecular Weight PAHs in µg/L (ppb)					
2-Methylnaphthalene	2 U	2 U	1 U	1 U	1 U
Acenaphthene	2 U	2 U	1 U	1 U	1 U
Acenaphthylene	2 U	2 U	1 U	1 U	1 U
Anthracene	2 U	2 U	1 U	1 U	1 U
Fluorene	2 U	2 U	1 U	1 U	1 U
Phenanthrene	2 U	2 U	1 U	1 U	1 U
Naphthalene	2 U	2 U	1 U	1 U	1 U
Total LPAHs					

Table 3-1 - Milwaukee Waterway Historical Groundwater Quality Data

Sample-ID	MW-2	MW-2D	MW-2	102391-02	102391-03
Location	MW-2	MW-2	MW-2	MW-2	MW-2
Sample Date	9/13/90	9/13/90	3/01/91	10/23/91	10/23/91
High Molecular Weight PAHs in µg/L (ppb)					
Benzo(g,h,i)Perylene	2 U	2 U	1 U	1 U	1 U
Benzo(a)Anthracene	2 U	2 U	1 U	1 U	1 U
Benzo(a)Pyrene	2 U	2 U	1 U	1 U	1 U
Chrysene	2 U	2 U	1 U	1 U	1 U
Dibenzo(a,h)Anthracene	2 U	2 U	1 U	1 U	1 U
Fluoranthene	2 U	2 U	1 U	1 U	1 U
Indeno(1,2,3-c,d)Pyrene	2 U	2 U	1 U	1 U	1 U
Pyrene	2 U	2 U	1 U	1 U	1 U
Total Benzofluoranthenes					
Total HPAHs					
Phthalates in µg/L (ppb)					
Butyl Benzyl Phthalate	2 U	2 U	1 U	1 U	1 U
Bis(2-Ethylhexyl) Phthalate	4 B	2 U	1 U	1 J	1 J
Di-n-Butyl Phthalate	2 U	2 U	1 U	1 U	1 U
Di-n-Octyl Phthalate	2 U	2 U	1 U	1 U	1 U
Diethyl Phthalate	2 U	2 U	1 U	1 U	1 U
Dimethyl Phthalate	2 U	2 U	1 U	1 U	1 U
Phenols in µg/L (ppb)					
2,4-Dimethylphenol	2 U	2 U	1 U	1 U	1 U
2-Methylphenol	2 U	2 U	1 U	1 U	1 U
4-Methylphenol	2 U	2 U	1 U	1 U	1 U
Pentachlorophenol	20 U	20 U	13 U	10 U	10 U
Phenol	2 U	2 U	1 U	1 U	1 U
Semivolatiles in µg/L (ppb)					
1,2,4-Trichlorobenzene	2 U	2 U	1 U	1 U	1 U
1,2-Dichlorobenzene	2 U	2 U	1 U	1 U	1 U
1,3-Dichlorobenzene	2 U	2 U	1 U	1 U	1 U
1,4-Dichlorobenzene	2 U	2 U	1 U	1 U	1 U
Hexachlorobenzene	4 U	4 U	3 U	2 U	2 U
Hexachlorobutadiene	2 U	2 U	1 U	1 U	1 U
N-Nitroso-Diphenylamine	2 U	2 U	1 U	1 U	1 U
Benzyl Alcohol	2 U	2 U	1 U	1 U	1 U
Benzoic Acid	50 U	50 U	33 U	25 UJ	25 UJ
Dibenzofuran	2 U	2 U	1 U	1 U	1 U
N-nitroso-di-n-propylamine	2 U	2 U	1 U	1 U	1 U
4-chloro-m-cresol					
4,6-dinitro-o-cresol					
Volatiles in µg/L (ppb)					
Ethylbenzene	1 U	1 U	1 U	1 U	1 U
Dibromochloromethane	3 U	3 U	3 U	1 U	1 U
Tetrachloroethene	1 U	1 U	1 U	1 U	1 U
Total Xylenes	1 U	1 U	1 U	1 U	1 U
Total-1,2-Dichloroethene	1 U	1 U	1 U	1 U	1 U

Table 3-1 - Milwaukee Waterway Historical Groundwater Quality Data

Sample-ID	9305569-11	9305569-12	2013: MW-3	MW-3	MW-3/S-1
Location	MW-2T	MW-2D	MW-3	MW-3	MW-3
Sample Date	5/11/93	5/11/93	3/09/88	6/22/89	10/05/89
Conventionals in mg/L					
(unless otherwise noted)					
Calcium in µg/L		5200	81000	61000	94000
Bicarb Alkalinity as CaCO3		250	1 U	240	240
Chloride		12	140	130	110
Magnesium in µg/L		19400 J	27000	21000	26000
Sodium in µg/L		77800 J	130000	97000	97000
Potassium in µg/L		23800			
Ammonia as N in ppm			0.82	0.53	0.38
pH	8.1				
Salinity in ppt	0.24		0.3	0.49	0.6
Sulfide in ppm		1 U			
Sulfate		26			
Total Phosphate as P		2.4			
Total Alkalinity		260			
Total Dissolved Solids	350		650	530	770 B
Total Suspended Solids	2				
Total Organic Carbon	11		18	11	14
Total Solids in Percent					
Total Volatile Solids in Percent					
Specific Conductance	580				
Metals in µg/L (ppb)					
Antimony		5 U	5 U	5 U	10 U
Arsenic		3 U	5 U	5 U	5 U
Barium			36	75	79
Beryllium			1 U	1 U	1 U
Cadmium			1 U	1 U	1 U
Chromium			1 U	1 U	1 U
Copper		3.2	1	1 U	5 B
Iron			28000	39000	20000 B
Lead		1 UJ	5 U	5 U	10
Manganese		59.4	700	650	440
Mercury			1 U	1 U	1 U
Nickel		0.6 U	2 U	2 U	2 U
Selenium			5 U	5 U	5 U
Silver			1 U	1 U	1 U
Thallium			5 U	5 U	5 U
Zinc		3.9 U	370	9	5 B
Low Molecular Weight PAHs in µg/L (ppb)					
2-Methylnaphthalene			2 U	2 U	2 U
Acenaphthene			2 U	2 U	2 U
Acenaphthylene			2 U	2 U	2 U
Anthracene			2 U	2 U	2 U
Fluorene			2 U	2 U	2 U
Phenanthrene			2 U	2 U	2 U
Naphthalene			4 U	4 U	4 U
Total LPAHs					

Table 3-1 - Milwaukee Waterway Historical Groundwater Quality Data

Sample-ID	9305569-11	9305569-12	2013: MW-3	MW-3	MW-3/S-1
Location	MW-2T	MW-2D	MW-3	MW-3	MW-3
Sample Date	5/11/93	5/11/93	3/09/88	6/22/89	10/05/89
High Molecular Weight PAHs in µg/L (ppb)					
Benzo(g,h,i)Perylene			4 U	4 U	4 U
Benzo(a)Anthracene			2 U	2 U	2 U
Benzo(a)Pyrene			4 U	4 U	4 U
Chrysene			2 U	2 U	2 U
Dibenzo(a,h)Anthracene			4 U	4 U	4 U
Fluoranthene			2 U	2 U	2 U
Indeno(1,2,3-c,d)Pyrene			4 U	4 U	4 U
Pyrene			2 U	2 U	2 U
Total Benzofluoranthenes					
Total HPAHs					
Phthalates in µg/L (ppb)					
Butyl Benzyl Phthalate			2 U	2 U	2 U
Bis(2-Ethylhexyl) Phthalate			3 B	3	2 U
Di-n-Butyl Phthalate			2 U	2 U	2 U
Di-n-Octyl Phthalate			2 U	2 U	2 U
Diethyl Phthalate			2 U	2 U	2 U
Dimethyl Phthalate			2 U	2 U	2 U
Phenols in µg/L (ppb)					
2,4-Dimethylphenol			2 U	2 U	2 U
2-Methylphenol			2 U	2 U	2 U
4-Methylphenol			2 U	2 U	2 U
Pentachlorophenol			20 U	20 U	20 U
Phenol			2 U	2 U	2 U
Semivolatiles in µg/L (ppb)					
1,2,4-Trichlorobenzene			2 U	2 U	2 U
1,2-Dichlorobenzene			2 U	2 U	2 U
1,3-Dichlorobenzene			2 U	2 U	2 U
1,4-Dichlorobenzene			2 U	2 U	2 U
Hexachlorobenzene			4 U	4 U	4 U
Hexachlorobutadiene			2 U	2 U	2 U
N-Nitroso-Diphenylamine			2 U	2 U	2 U
Benzyl Alcohol			2 U	2 U	2 U
Benzoic Acid			50 U	50 U	50 U
Dibenzofuran			2 U	2 U	2 U
N-nitroso-di-n-propylamine			2 U	2 U	2 U
4-chloro-m-cresol			4 U	4 U	4 U
4,6-dinitro-o-cresol			20 U	20 U	20 U
Volatiles in µg/L (ppb)					
Ethylbenzene			1 U	1 U	1 U
Dibromochloromethane			2.5 U	3 U	3 U
Tetrachloroethene					
Total Xylenes			1 U	1 U	1 U
Total-1,2-Dichloroethene			1 U	1 U	1 U

Table 3-1 - Milwaukee Waterway Historical Groundwater Quality Data

Sample-ID	MW-3	MW-3	102391-08	9305569-15	9305569-16
Location	MW-3	MW-3	MW-3	MW-3T	MW-3D
Sample Date	9/13/90	3/01/91	10/23/91	5/11/93	5/11/93
Conventionals in mg/L (unless otherwise noted)					
Calcium in µg/L	100000	72000			77500
Bicarb Alkalinity as CaCO3	270	270	280		800
Chloride	240	140	340		310
Magnesium in µg/L	25000	19000			20700 J
Sodium in µg/L	87000	88000			195000 J
Potassium in µg/L					15200
Ammonia as N in ppm	0.49	0.4	0.49		
pH				7.4	
Salinity in ppt	0.55	0.38	0.72 J	0.78	
Sulfide in ppm			2 J		1 U
Sulfate					10 U
Total Phosphate as P					1.9
Total Alkalinity					800
Total Dissolved Solids	710	570	920	820	
Total Suspended Solids				99	
Total Organic Carbon	10	13	13	13	
Total Solids in Percent					
Total Volatile Solids in Percent					
Specific Conductance				1500	
Metals in µg/L (ppb)					
Antimony	20 U	6 U	19 U		5 U
Arsenic	5 U	5 U	10 UJ		3 U
Barium	100	88	128		
Beryllium	5 U	1 U	1 U		
Cadmium	5 U	6	4 U		
Chromium	10 U	1 U	5 U		
Copper	2.9 U	1 U	11 U		0.4 U
Iron	47000	34000	40400		
Lead	3 U	9.9	1 U		1 UJ
Manganese	790	570	750		590
Mercury	1 U	1 U	0.2 U		
Nickel	7.1 U	2 U	0.3 U		0.6 U
Selenium	5 U	5 U	10 R		
Silver	5 U	1 U	3.3 U		
Thallium	2 U	2 U	2 UJ		
Zinc	10	3	2		45.7 J
Low Molecular Weight PAHs in µg/L (ppb)					
2-Methylnaphthalene	2 U	1 U	1 U		
Acenaphthene	2 U	1 U	1 U		
Acenaphthylene	2 U	1 U	1 U		
Anthracene	2 U	1 U	1 U		
Fluorene	2 U	1 U	1 U		
Phenanthrene	2 U	1 U	1 U		
Naphthalene	2 U	1 U	1 U		
Total LPAHs					

Table 3-1 - Milwaukee Waterway Historical Groundwater Quality Data

Sample-ID	MW-3	MW-3	102391-08	9305569-15	9305569-16
Location	MW-3	MW-3	MW-3	MW-3T	MW-3D
Sample Date	9/13/90	3/01/91	10/23/91	5/11/93	5/11/93
High Molecular Weight PAHs in µg/L (ppb)					
Benzo(g,h,i)Perylene	2 U	1 U	1 U		
Benzo(a)Anthracene	2 U	1 U	1 U		
Benzo(a)Pyrene	2 U	1 U	1 U		
Chrysene	2 U	1 U	1 U		
Dibenzo(a,h)Anthracene	2 U	1 U	1 U		
Fluoranthene	2 U	1 U	1 U		
Indeno(1,2,3-c,d)Pyrene	2 U	1 U	1 U		
Pyrene	2 U	1 U	1 U		
Total Benzofluoranthenes					
Total HPAHs					
Phthalates in µg/L (ppb)					
Butyl Benzyl Phthalate	2 U	1 U	1 U		
Bis(2-Ethylhexyl) Phthalate	2 U	1 U	1 J		
Di-n-Butyl Phthalate	2 U	1 U	1 U		
Di-n-Octyl Phthalate	2 U	1 U	1 U		
Diethyl Phthalate	2 U	1 U	1 U		
Dimethyl Phthalate	2 U	1 U	1 U		
Phenols in µg/L (ppb)					
2,4-Dimethylphenol	2 U	1 U	1 U		
2-Methylphenol	2 U	1 U	1 U		
4-Methylphenol	2 U	1 U	1 U		
Pentachlorophenol	20 U	10 U	10 U		
Phenol	2 U	1 U	1 U		
Semivolatiles in µg/L (ppb)					
1,2,4-Trichlorobenzene	2 U	1 U	1 U		
1,2-Dichlorobenzene	2 U	1 U	1 U		
1,3-Dichlorobenzene	2 U	1 U	1 U		
1,4-Dichlorobenzene	2 U	1 U	1 U		
Hexachlorobenzene	4 U	2 U	2 U		
Hexachlorobutadiene	2 U	1 U	1 U		
N-Nitroso-Diphenylamine	2 U	1 U	1 U		
Benzyl Alcohol	2 U	1 U	1 U		
Benzoic Acid	50 U	25 U	25 UJ		
Dibenzofuran	2 U	1 U	1 U		
N-nitroso-di-n-propylamine	2 U	1 U	1 U		
4-chloro-m-cresol					
4,6-dinitro-o-cresol					
Volatiles in µg/L (ppb)					
Ethylbenzene	1 U	1 U	1 U		
Dibromochloromethane	3 U	3 U	1 U		
Tetrachloroethene	1 U	1 U	1 U		
Total Xylenes	1 U	1 U	1 U		
Total-1,2-Dichloroethene	1 U	1 U	1 U		

Table 3-1 - Milwaukee Waterway Historical Groundwater Quality Data

Sample-ID	2013: MW-4	MW-4	MW-4/S-1	MW-4	102391-05
Location	MW-4	MW-4	MW-4	MW-4	MW-4
Sample Date	3/08/88	6/21/89	10/04/89	2/28/91	10/23/91
Conventionals in mg/L					
(unless otherwise noted)					
Calcium in µg/L	15000	7000	10000	5200	
Bicarb Alkalinity as CaCO3	1 U	490	530	510	500
Chloride	1100	760	690	580	300
Magnesium in µg/L	31000	27000	32000	16000	
Sodium in µg/L	850000	630000	980000	51000	
Potassium in µg/L					
Ammonia as N in ppm	1.1	0.87	1	0.47	0.45
pH					
Salinity in ppt	1.98	1.65	1.5	1.2	1.04 J
Sulfide in ppm					
Sulfate					
Total Phosphate as P					
Total Alkalinity					
Total Dissolved Solids	2400	2000	2000 B	1700	1500
Total Suspended Solids					
Total Organic Carbon	20	34	29	36	39
Total Solids in Percent					
Total Volatile Solids in Percent					
Specific Conductance					
Metals in µg/L (ppb)					
Antimony	7	5 U	10 U	6	1.9 U
Arsenic	2 J	5 U	5 U	5 U	2.2 J
Barium	20	24	25	26	22.8
Beryllium	5 U	1 U	1	1 U	0.33
Cadmium	5 U	1 U	1 U	1 U	0.4 U
Chromium	9	11	9	15	14.7
Copper	24	12	1 U	20	19.3
Iron	1400	1700	180 B	2400	2720
Lead	10 U	5 U	5 U	3 U	1.5
Manganese	54	48	66	49	49.7
Mercury	1 U	1 U	1 U	1 U	0.2 U
Nickel	3 J	2 U	2 U	2 U	2 U
Selenium	5 U	5 U	5 U	5 U	10 R
Silver	5 U	1 U	1 U	1 U	0.3 U
Thallium	5 U	13 UD	5 U	2 U	2 UJ
Zinc	420	31	2 B	3	1.9 U
Low Molecular Weight PAHs in µg/L (ppb)					
2-Methylnaphthalene	2 U	2 U	2 U	1 U	1 U
Acenaphthene	2 U	2 U	2 U	1 U	1 U
Acenaphthylene	2 U	2 U	2 U	1 U	1 U
Anthracene	2 U	2 U	2 U	1 U	1 U
Fluorene	2 U	2 U	2 U	1 U	1 U
Phenanthrene	2 U	2 U	2 U	1 U	1 U
Naphthalene	4 U	4 U	4 U	1 U	1 U
Total LPAHs					

Table 3-1 - Milwaukee Waterway Historical Groundwater Quality Data

Sample-ID	2013: MW-4	MW-4	MW-4/S-1	MW-4	102391-05
Location	MW-4	MW-4	MW-4	MW-4	MW-4
Sample Date	3/08/88	6/21/89	10/04/89	2/28/91	10/23/91
High Molecular Weight PAHs in µg/L (ppb)					
Benzo(g,h,i)Perylene	4 U	4 U	4 U	1 U	1 U
Benzo(a)Anthracene	2 U	2 U	2 U	1 U	1 U
Benzo(a)Pyrene	4 U	4 U	4 U	1 U	1 U
Chrysene	2 U	2 U	2 U	1 U	1 U
Dibenzo(a,h)Anthracene	4 U	4 U	4 U	1 U	1 U
Fluoranthene	2 U	2 U	2 U	1 U	1 U
Indeno(1,2,3-c,d)Pyrene	4 U	4 U	4 U	1 U	1 U
Pyrene	2 U	2 U	2 U	1 U	1 U
Total Benzofluoranthenes					
Total HPAHs					
Phthalates in µg/L (ppb)					
Butyl Benzyl Phthalate	2 U	2 U	2 U	1 U	1 U
Bis(2-Ethylhexyl) Phthalate	2 B	2 U	2 U	2	1 J
Di-n-Butyl Phthalate	2 U	2 U	2 U	1 U	1 U
Di-n-Octyl Phthalate	2 U	2 U	2 U	1 U	1 U
Diethyl Phthalate	2 U	2 U	2 U	1 U	1 U
Dimethyl Phthalate	2 U	2 U	2 U	1 U	1 U
Phenols in µg/L (ppb)					
2,4-Dimethylphenol	2 U	2 U	2 U	1 U	1 U
2-Methylphenol	2 U	2 U	2 U	1 U	1 U
4-Methylphenol	2 U	2 U	2 U	1 U	1 U
Pentachlorophenol	20 U	20 U	20 U	10 U	10 U
Phenol	2 U	2 U	2 U	1 U	1 U
Semivolatiles in µg/L (ppb)					
1,2,4-Trichlorobenzene	2 U	2 U	2 U	1 U	1 U
1,2-Dichlorobenzene	2 U	2 U	2 U	1 U	1 U
1,3-Dichlorobenzene	2 U	2 U	2 U	1 U	1 U
1,4-Dichlorobenzene	2 U	2 U	2 U	1 U	1 U
Hexachlorobenzene	4 U	4 U	4 U	2 U	2 U
Hexachlorobutadiene	2 U	2 U	2 U	1 U	1 U
N-Nitroso-Diphenylamine	2 U	2 U	2 U	1 U	1 U
Benzyl Alcohol	2 U	2 U	2 U	1 U	1 U
Benzoic Acid	51 U	50 U	50 U	26 U	26 UJ
Dibenzofuran	2 U	2 U	2 U	1 U	1 U
N-nitroso-di-n-propylamine	2 U	2 U	2 U	1 U	1 U
4-chloro-m-cresol	4 U	4 U	4 U		
4,6-dinitro-o-cresol	20 U	20 U	20 U		
Volatiles in µg/L (ppb)					
Ethylbenzene	1 U	1 U	1 U	1 U	1 U
Dibromochloromethane	2.5 U	3 U	3 U	3 U	1 U
Tetrachloroethene				1 U	1 U
Total Xylenes	1 U	1 U	1 U	1 U	1 U
Total-1,2-Dichloroethene	1 U	1 U	1 U	1 U	1 U

Table 3-1 - Milwaukee Waterway Historical Groundwater Quality Data

Sample-ID	9305569-05	9305569-06	9305569-07	9305569-08	2013: MW-4
Location	MW-4T	MW-4D	MW-4D	MW-4D	MW-4A
Sample Date	5/11/93	5/11/93	5/11/93	5/11/93	3/08/88
Conventionals in mg/L					
(unless otherwise noted)					
Calcium in µg/L		4340		4290	75000
Bicarb Alkalinity as CaCO3		450		450	1 U
Chloride		520		500	13000
Magnesium in µg/L		12600 J		12600 J	170000
Sodium in µg/L		455000 J		446000 J	1000000
Potassium in µg/L		20000		19600	
Ammonia as N in ppm					5.5 U
pH	8.1		8.1		
Salinity in ppt	1.17		1.1		22.43
Sulfide in ppm		1 U		1 U	
Sulfate		19		18	
Total Phosphate as P		14		14	
Total Alkalinity		450		450	
Total Dissolved Solids	1500		1400		24000
Total Suspended Solids	7		5		
Total Organic Carbon	31		33		3.9
Total Solids in Percent					
Total Volatile Solids in Percent					
Specific Conductance	2600		2500		
Metals in µg/L (ppb)					
Antimony		5 U		5 U	4 J
Arsenic		3 U		3 U	2 J
Barium					20 U
Beryllium					5 U
Cadmium					3 J
Chromium					6
Copper		17.4		11.4 B	10
Iron					350
Lead		1.4 J		1 UJ	10 U
Manganese		51.3		48.6	58
Mercury					1 U
Nickel		6 U		6 U	3 J
Selenium					7
Silver					5 U
Thallium					5 U
Zinc		14 U		14 U	29
Low Molecular Weight PAHs in µg/L (ppb)					
2-Methylnaphthalene					2 U
Acenaphthene					2 U
Acenaphthylene					2 U
Anthracene					2 U
Fluorene					2 U
Phenanthrene					2 U
Naphthalene					4 U
Total LPAHs					

Table 3-1 - Milwaukee Waterway Historical Groundwater Quality Data

Sample-ID	9305569-05	9305569-06	9305569-07	9305569-08	2013: MW-4
Location	MW-4T	MW-4D	MW-4D	MW-4D	MW-4A
Sample Date	5/11/93	5/11/93	5/11/93	5/11/93	3/08/88
High Molecular Weight PAHs in µg/L (ppb)					
Benzo(g,h,i)Perylene					4 U
Benzo(a)Anthracene					2 U
Benzo(a)Pyrene					4 U
Chrysene					2 U
Dibenzo(a,h)Anthracene					4 U
Fluoranthene					2 U
Indeno(1,2,3-c,d)Pyrene					4 U
Pyrene					2 U
Total Benzofluoranthenes					
Total HPAHs					
Phthalates in µg/L (ppb)					
Butyl Benzyl Phthalate					2 U
Bis(2-Ethylhexyl) Phthalate					2 B
Di-n-Butyl Phthalate					2 U
Di-n-Octyl Phthalate					2 U
Diethyl Phthalate					2 U
Dimethyl Phthalate					2 U
Phenols in µg/L (ppb)					
2,4-Dimethylphenol					2 U
2-Methylphenol					2 U
4-Methylphenol					2 U
Pentachlorophenol					20 U
Phenol					2 U
Semivolatiles in µg/L (ppb)					
1,2,4-Trichlorobenzene					2 U
1,2-Dichlorobenzene					2 U
1,3-Dichlorobenzene					2 U
1,4-Dichlorobenzene					2 U
Hexachlorobenzene					4 U
Hexachlorobutadiene					2 U
N-Nitroso-Diphenylamine					2 U
Benzyl Alcohol					2 U
Benzoic Acid					50 U
Dibenzofuran					2 U
N-nitroso-di-n-propylamine					2 U
4-chloro-m-cresol					4 U
4,6-dinitro-o-cresol					20 U
Volatiles in µg/L (ppb)					
Ethylbenzene					1 U
Dibromochloromethane					2.5 U
Tetrachloroethene					
Total Xylenes					I U
Total-1,2-Dichloroethene					1 U

Table 3-1 - Milwaukee Waterway Historical Groundwater Quality Data

Sample-ID	MW-4A	MW-4A/S-1	MW-4A	MW-4A	102391-04
Location	MW-4A	MW-4A	MW-4A	MW-4A	MW-4A
Sample Date	6/21/89	10/04/89	9/12/90	2/28/91	10/23/91
Conventionals in mg/L (unless otherwise noted)					
Calcium in µg/L	280000	360000	300000	30000	
Bicarb Alkalinity as CaCO3	340	350	320	340	340
Chloride	13000	13000	15000	13000	14000
Magnesium in µg/L	1200000	760000	910000	92000	
Sodium in µg/L	9400000	8200000	7900000	7500000	
Potassium in µg/L					
Ammonia as N in ppm	4.5	5.7	4.2	5.3	4.6
pH					
Salinity in ppt	24.99	24.6	25.22	25	25.22
Sulfide in ppm					1 UJ
Sulfate					
Total Phosphate as P					
Total Alkalinity					
Total Dissolved Solids	27000	27000 B	27000	25000	29000
Total Suspended Solids					
Total Organic Carbon	12	5.4	5.4	5.5	5.4
Total Solids in Percent					
Total Volatile Solids in Percent					
Specific Conductance					
Metals in µg/L (ppb)					
Antimony	5 U	5 U	20 U	20 U	19 U
Arsenic	5 U	5 U	5 U	5 U	10 UJ
Barium	54	20 U	74	76	71.8
Beryllium	1 U	5 U	5 U	2 U	1 U
Cadmium	1 U	5 U	5 U	1 U	4 U
Chromium	1 U	5 U	10 U	10 U	13.1
Copper	1 U	5 U	2.9 U	1 U	11 U
Iron	1300	1600 B	1900	1900	1910
Lead	5 U	10 U	10 U	3 U	10 U
Manganese	240	290	330	240	304
Mercury	1 U	1 U	1 U	1 U	0.2 U
Nickel	2 U	5 U	7.1 U	2 U	3 U
Selenium	5 U	5 U	5 U	5 U	100 R
Silver	1 U	5 U	15 U	5 U	3 U
Thallium	13 UD	5 U	20 U	5 U	20 UJ
Zinc	14	13	12	3 B	2 U
Low Molecular Weight PAHs in µg/L (ppb)					
2-Methylnaphthalene	2 U	2 U	2 U	1 U	1 U
Acenaphthene	2 U	2 U	2 U	1 U	1 U
Acenaphthylene	2 U	2 U	2 U	1 U	1 U
Anthracene	2 U	2 U	2 U	1 U	1 U
Fluorene	2 U	2 U	2 U	1 U	1 U
Phenanthrene	2 U	2 U	2 U	1 U	1 U
Naphthalene	4 U	4 U	2 U	1 U	1 U
Total LPAHs					

Table 3-1 - Milwaukee Waterway Historical Groundwater Quality Data

Sample-ID	MW-4A	MW-4A/S-1	MW-4A	MW-4A	102391-04
Location	MW-4A	MW-4A	MW-4A	MW-4A	MW-4A
Sample Date	6/21/89	10/04/89	9/12/90	2/28/91	10/23/91
High Molecular Weight PAHs in µg/L (ppb)					
Benzo(g,h,i)Perylene	4 U	4 U	2 U	1 U	1 U
Benzo(a)Anthracene	2 U	2 U	2 U	1 U	1 U
Benzo(a)Pyrene	4 U	4 U	2 U	1 U	1 U
Chrysene	2 U	2 U	2 U	1 U	1 U
Dibenzo(a,h)Anthracene	4 U	4 U	2 U	1 U	1 U
Fluoranthene	2 U	2 U	2 U	1 U	1 U
Indeno(1,2,3-c,d)Pyrene	4 U	4 U	2 U	1 U	1 U
Pyrene	2 U	2 U	2 U	1 U	1 U
Total Benzofluoranthenes					
Total HPAHs					
Phthalates in µg/L (ppb)					
Butyl Benzyl Phthalate	2 U	2 U	2 U	1 U	1 U
Bis(2-Ethylhexyl) Phthalate	2 U	2 U	3 B	10	2 J
Di-n-Butyl Phthalate	2 U	2 U	2 U	1 U	1 U
Di-n-Octyl Phthalate	2 U	2 U	2 U	1 U	1 U
Diethyl Phthalate	2 U	2 U	2 U	1 U	1 U
Dimethyl Phthalate	2 U	2 U	2 U	1 U	1 U
Phenols in µg/L (ppb)					
2,4-Dimethylphenol	2 U	2 U	2 U	1 U	1 U
2-Methylphenol	2 U	2 U	2 U	1 U	1 U
4-Methylphenol	2 U	2 U	2 U	1 U	1 U
Pentachlorophenol	20 U	20 U	20 U	11 U	10 U
Phenol	2 U	2 U	2 U	1 U	1 U
Semivolatiles in µg/L (ppb)					
1,2,4-Trichlorobenzene	2 U	2 U	2 U	1 U	1 U
1,2-Dichlorobenzene	2 U	2 U	2 U	1 U	1 U
1,3-Dichlorobenzene	2 U	2 U	2 U	1 U	1 U
1,4-Dichlorobenzene	2 U	2 U	2 U	1 U	1 U
Hexachlorobenzene	4 U	4 U	4 U	2 U	2 U
Hexachlorobutadiene	2 U	2 U	2 U	1 U	1 U
N-Nitroso-Diphenylamine	2 U	2 U	2 U	1 U	1 U
Benzyl Alcohol	2 U	2 U	2 U	1 U	1 U
Benzoic Acid	50 U	50 U	50 U	26 U	26 UJ
Dibenzofuran	2 U	2 U	2 U	1 U	1 U
N-nitroso-di-n-propylamine	2 U	2 U	2 U	1 U	1 U
4-chloro-m-cresol	4 U	4 U			
4,6-dinitro-o-cresol	20 U	20 U			
Volatiles in µg/L (ppb)					
Ethylbenzene	1 U	1 U	1 U	1 U	1 U
Dibromochloromethane	3 U	3 U	3 U	3 U	1 U
Tetrachloroethene			1 U	1 U	1 U
Total Xylenes	1 U	1 U	1 U	1 U	1 U
Total-1,2-Dichloroethene	1 U	1 U	1 U	1 U	1 U

Table 3-1 - Milwaukee Waterway Historical Groundwater Quality Data

Sample-ID	9305569-09	9305569-10	2013: MW-5	2013: MW-5	MW-5
Location	MW-4AT	MW-4AD	MW-5	MW-5	MW-5
Sample Date	5/11/93	5/11/93	3/09/88	3/09/88	6/21/89
Conventionals in mg/L					
(unless otherwise noted)					
Calcium in µg/L		283000	13000	390000	320000
Bicarb Alkalinity as CaCO3		310	1 U	510	610
Chloride		14000	12	14000	14000
Magnesium in µg/L		843000 J	13000	780000	1200000
Sodium in µg/L		6760000 J	54000	7500000	7100000
Potassium in µg/L		265000			
Ammonia as N in ppm			1.4	5.4	6.1
pH	7.4				
Salinity in ppt	24.73		0.3 U	24.38	24.99
Sulfide in ppm		1			
Sulfate		2000			
Total Phosphate as P		2.1			
Total Alkalinity		310			
Total Dissolved Solids	29000		390	27000	27000
Total Suspended Solids	84				
Total Organic Carbon	5.7		4.3	3.9	21
Total Solids in Percent					
Total Volatile Solids in Percent					
Specific Conductance	34000				
Metals in µg/L (ppb)					
Antimony		5 U	5 U	5 U	5 U
Arsenic		3 U	5 U	5 U	5 U
Barium			20	60	220
Beryllium			1 U	5 U	5 U
Cadmium			2	5 U	15 UE
Chromium			4	5 U	7
Copper		4 U	8	2 J	15 UE
Iron			500	5000	3900
Lead		20 UJ	5 U	10 U	30 UE
Manganese		270	150	4700	5800
Mercury			1 U	1 U	1 U
Nickel		6 U	6	4 J	15 UE
Selenium			5 U	10	5 U
Silver			1 U	5 U	15 UE
Thallium			5 U	5 U	13 UD
Zinc		14 U	44	16	15 UE
Low Molecular Weight PAHs in µg/L (ppb)					
2-Methylnaphthalene			2 U	2 U	2 U
Acenaphthene			2 U	2 U	2 U
Acenaphthylene			2 U	2 U	2 U
Anthracene			2 U	2 U	2 U
Fluorene			2 U	2 U	2 U
Phenanthrene			2 U	2 U	2 U
Naphthalene			4 U	4 U	4 U
Total LPAHs					

Table 3-1 - Milwaukee Waterway Historical Groundwater Quality Data

Sample-ID	9305569-09	9305569-10	2013: MW-5	2013: MW-5	MW-5
Location	MW-4AT	MW-4AD	MW-5	MW-5	MW-5
Sample Date	5/11/93	5/11/93	3/09/88	3/09/88	6/21/89
High Molecular Weight PAHs in µg/L (ppb)					
Benzo(g,h,i)Perylene			4 U	4 U	5 U
Benzo(a)Anthracene			2 U	2 U	3 U
Benzo(a)Pyrene			4 U	4 U	5 U
Chrysene			2 U	2 U	3 U
Dibenzo(a,h)Anthracene			4 U	4 U	5 U
Fluoranthene			2 U	2 U	3 U
Indeno(1,2,3-c,d)Pyrene			4 U	4 U	5 U
Pyrene			2 U	2 U	3 U
Total Benzofluoranthenes					
Total HPAHs					
Phthalates in µg/L (ppb)					
Butyl Benzyl Phthalate			2 U	2 U	2 U
Bis(2-Ethylhexyl) Phthalate			1 JB	15	4
Di-n-Butyl Phthalate			2 U	2 U	2 U
Di-n-Octyl Phthalate			2 U	2 U	2 U
Diethyl Phthalate			2 U	2 U	2 U
Dimethyl Phthalate			2 U	2 U	2 U
Phenols in µg/L (ppb)					
2,4-Dimethylphenol			2 U	2 U	2 U
2-Methylphenol			2 U	2 U	2 U
4-Methylphenol			2 U	2 U	2 U
Pentachlorophenol			20 U	20 U	20 U
Phenol			2 U	2 U	2 U
Semivolatiles in µg/L (ppb)					
1,2,4-Trichlorobenzene			2 U	2 U	2 U
1,2-Dichlorobenzene			2 U	2 U	2 U
1,3-Dichlorobenzene			2 U	2 U	2 U
1,4-Dichlorobenzene			2 U	2 U	2 U
Hexachlorobenzene			4 U	4 U	4 U
Hexachlorobutadiene			2 U	2 U	2 U
N-Nitroso-Diphenylamine			2 U	2 U	2 U
Benzyl Alcohol			2 U	2 U	2 U
Benzoic Acid			51 U	50 U	50 U
Dibenzofuran			2 U	2 U	2 U
N-nitroso-di-n-propylamine			2 U	2 U	2 U
4-chloro-m-cresol			4 U	4 U	4 U
4,6-dinitro-o-cresol			20 U	20 U	20 U
Volatiles in µg/L (ppb)					
Ethylbenzene			1 U	1 U	1 U
Dibromochloromethane			2.5 U	2.5 U	3 U
Tetrachloroethene					
Total Xylenes			1 U	1 U	1 U
Total-1,2-Dichloroethene			1 U	1 U	1 U

Table 3-1 - Milwaukee Waterway Historical Groundwater Quality Data

Sample-ID	MW-5 RE	MW-5/S-1	MW-5	MW-5	102391-01
Location	MW-5	MW-5	MW-5	MW-5	MW-5
Sample Date	6/21/89	10/04/89	9/13/90	3/01/91	10/23/91
Conventionals in mg/L					
(unless otherwise noted)					
Calcium in µg/L		410000	360000	36000	
Bicarb Alkalinity as CaCO3		590	550	560	660
Chloride		12000	15000	17000	13000
Magnesium in µg/L		780000	910000	92000	
Sodium in µg/L		8200000	7800000	7400000	
Potassium in µg/L					
Ammonia as N in ppm		7.8	6.1	6.4	6.4
pH					
Salinity in ppt		24.5	25.15	25	24.66
Sulfide in ppm					1 UJ
Sulfate					
Total Phosphate as P					
Total Alkalinity					
Total Dissolved Solids		26000 B	29000	26000	27000
Total Suspended Solids					
Total Organic Carbon		7.8	7.2	6.8	10
Total Solids in Percent					
Total Volatile Solids in Percent					
Specific Conductance					
Metals in µg/L (ppb)					
Antimony		5 U	20 U	20 U	19 U
Arsenic		5 U	5 U	5 U	10 UJ
Barium		20 U	89	92	86.4 B
Beryllium		5 U	5 U	2 U	1 U
Cadmium		5 U	5 U	1 U	4 U
Chromium		5 U	10 U	10 U	16
Copper		5 U	2.9 U	1 U	11 U
Iron		3900 B	5100	4700	4690
Lead		10 U	10 U	3 U	10 U
Manganese		6100	6500	5000	5750
Mercury		1 U	1 U	1 U	0.2 U
Nickel		5 U	7.1 U	2 U	3 U
Selenium		5 U	5 U	5 U	20 R
Silver		10	15 U	5 U	3 U
Thallium		5 U	20 U	5 U	20 UJ
Zinc		12	13	4 B	2 U
Low Molecular Weight PAHs in µg/L (ppb)					
2-Methylnaphthalene	3 U	2 U	2 U	1 U	1 U
Acenaphthene	3 U	2 U	2 U	1 U	1 U
Acenaphthylene	3 U	2 U	2 U	1 U	1 U
Anthracene	3 U	2 U	2 U	1 U	1 U
Fluorene	3 U	2 U	2 U	1 U	1 U
Phenanthrene	3 U	2 U	2 U	1 U	1 U
Naphthalene	5 U	4 U	2 U	1 U	1 U
Total LPAHs					

Table 3-1 - Milwaukee Waterway Historical Groundwater Quality Data

Sample-ID	MW-5 RE	MW-5/S-1	MW-5	MW-5	102391-01
Location	MW-5	MW-5	MW-5	MW-5	MW-5
Sample Date	6/21/89	10/04/89	9/13/90	3/01/91	10/23/91
High Molecular Weight PAHs in µg/L (ppb)					
Benzo(g,h,i)Perylene		4 U	2 U	1 U	1 U
Benzo(a)Anthracene		2 U	2 U	1 U	1 U
Benzo(a)Pyrene		4 U	2 U	1 U	1 U
Chrysene		2 U	2 U	1 U	1 U
Dibenzo(a,h)Anthracene		4 U	2 U	1 U	1 U
Fluoranthene		2 U	2 U	1 U	1 U
Indeno(1,2,3-c,d)Pyrene		4 U	2 U	1 U	1 U
Pyrene		2 U	2 U	1 U	1 U
Total Benzofluoranthenes					
Total HPAHs					
Phthalates in µg/L (ppb)					
Butyl Benzyl Phthalate	3 U	2 U	2 U	1 U	1 U
Bis(2-Ethylhexyl) Phthalate	3 U	25	2 B	2	1 J
Di-n-Butyl Phthalate	3 U	2 U	2 U	1 U	1 U
Di-n-Octyl Phthalate	3 U	2 U	2 U	1 U	1 U
Diethyl Phthalate	3 U	2 U	2 U	1 U	1 U
Dimethyl Phthalate	3 U	2 U	2 U	1 U	1 U
Phenols in µg/L (ppb)					
2,4-Dimethylphenol	3 U	2 U	2 U	1 U	1 U
2-Methylphenol	3 U	2 U	2 U	1 U	1 U
4-Methylphenol	3 U	2 U	2 U	1 U	1 U
Pentachlorophenol	27 U	20 U	20 U	10 U	10 U
Phenol	3 U	2 U	2 U	1 U	1 U
Semivolatiles in µg/L (ppb)					
1,2,4-Trichlorobenzene	3 U	2 U	2 U	1 U	1 U
1,2-Dichlorobenzene	3 U	2 U	2 U	1 U	1 U
1,3-Dichlorobenzene	3 U	2 U	2 U	1 U	1 U
1,4-Dichlorobenzene	3 U	2 U	2 U	1 U	1 U
Hexachlorobenzene	5 U	4 U	4 U	2 U	2 U
Hexachlorobutadiene	3 U	2 U	2 U	1 U	1 U
N-Nitroso-Diphenylamine	3 U	2 U	2 U	1 U	1 U
Benzyl Alcohol	3 U	2 U	2 U	1 U	1 U
Benzoic Acid	67 U	50 U	50 U	26 U	25 UJ
Dibenzofuran	3 U	2 U	2 U	1 U	1 U
N-nitroso-di-n-propylamine	3 U	2 U	2 U	1 U	1 U
4-chloro-m-cresol	5 U	4 U			
4,6-dinitro-o-cresol	27 U	20 U			
Volatiles in µg/L (ppb)					
Ethylbenzene		1 U	1 U	1 U	1 U
Dibromochloromethane		3 U	3 U	3 U	1 U
Tetrachloroethene			1 U	1 U	1 U
Total Xylenes		1 U	1 U	1 U	1 U
Total-1,2-Dichloroethene		1 U	1 U	1 U	1 U

Table 3-1 - Milwaukee Waterway Historical Groundwater Quality Data

Sample-ID	9305569-19	9305569-20	2013: MW-5	MW-5A	MW-5A/S-1
Location	MW-5T	MW-5D	MW-5A	MW-5A	MW-5A
Sample Date	5/11/93	5/11/93	3/09/88	6/21/89	10/04/89
Conventionals in mg/L					
(unless otherwise noted)					
Calcium in µg/L		329000	260000	320000	410000
Bicarb Alkalinity as CaCO3		360	860	840	770
Chloride		13000	15000	15000	13000
Magnesium in µg/L		745000 J	500000	1100000	900000
Sodium in µg/L		6030000 J	4500000	12000000	8800000
Potassium in µg/L		234000			
Ammonia as N in ppm			18	19	18
pH	7.6				
Salinity in ppt	23.98		26.4	27.01	26.6
Sulfide in ppm		1 U			
Sulfate		1500			
Total Phosphate as P		1.7			
Total Alkalinity		360			
Total Dissolved Solids	26000		28000	28000	28000 B
Total Suspended Solids	80				
Total Organic Carbon	9.2		6.4	25	8.3
Total Solids in Percent					
Total Volatile Solids in Percent					
Specific Conductance	33000				
Metals in µg/L (ppb)					
Antimony		5 U	5 U	5 U	5 U
Arsenic		3 U	5 U	5 U	5 U
Barium			60	260	30
Beryllium			5 U	5 U	5 U
Cadmium			2 J	15 UE	5 U
Chromium			5 U	5 U	5 U
Copper		4 U	6	15 UE	5 U
Iron			420	400	270 B
Lead		20 UJ	10 U	30 UE	10 U
Manganese		5030	180	200	300
Mercury			1 U	1 U	1 U
Nickel		6 U	6	15 UE	5 U
Selenium			6	5 U	5 U
Silver			5 U	15 UE	5 U
Thallium			5 U	13 UD	5 U
Zinc		14 U	53	15 UE	12 U
Low Molecular Weight PAHs in µg/L (ppb)					
2-Methylnaphthalene			3 U	2 U	2 U
Acenaphthene			3 U	2 U	2 U
Acenaphthylene			3 U	2 U	2 U
Anthracene			3 U	2 U	2 U
Fluorene			3 U	2 U	2 U
Phenanthrene			3 U	2 U	2 U
Naphthalene			5 U	4 U	4 U
Total LPAHs					

Table 3-1 - Milwaukee Waterway Historical Groundwater Quality Data

Sample-ID	9305569-19	9305569-20	2013: MW-5	MW-5A	MW-5A/S-1
Location	MW-5T	MW-5D	MW-5A	MW-5A	MW-5A
Sample Date	5/11/93	5/11/93	3/09/88	6/21/89	10/04/89
High Molecular Weight PAHs in µg/L (ppb)					
Benzo(g,h,i)Perylene			5 U	4 U	4 U
Benzo(a)Anthracene			3 U	2 U	2 U
Benzo(a)Pyrene			5 U	4 U	4 U
Chrysene			3 U	2 U	2 U
Dibenzo(a,h)Anthracene			5 U	4 U	4 U
Fluoranthene			3 U	2 U	2 U
Indeno(1,2,3-c,d)Pyrene			5 U	4 U	4 U
Pyrene			3 U	2 U	2 U
Total Benzofluoranthenes					
Total HPAHs					
Phthalates in µg/L (ppb)					
Butyl Benzyl Phthalate			3 U	2 U	2 U
Bis(2-Ethylhexyl) Phthalate			4 B	2 U	2 U
Di-n-Butyl Phthalate			3 U	2 U	2 U
Di-n-Octyl Phthalate			3 U	2 U	2 U
Diethyl Phthalate			3 U	2 U	2 U
Dimethyl Phthalate			3 U	2 U	2 U
Phenols in µg/L (ppb)					
2,4-Dimethylphenol			3 U	2 U	2 U
2-Methylphenol			3 U	2 U	2 U
4-Methylphenol			3 U	2 U	2 U
Pentachlorophenol			27 U	20 U	20 U
Phenol			3 U	2 U	2 U
Semivolatiles in µg/L (ppb)					
1,2,4-Trichlorobenzene			3 U	2 U	2 U
1,2-Dichlorobenzene			3 U	2 U	2 U
1,3-Dichlorobenzene			3 U	2 U	2 U
1,4-Dichlorobenzene			3 U	2 U	2 U
Hexachlorobenzene			5 U	4 U	4 U
Hexachlorobutadiene			3 U	2 U	2 U
N-Nitroso-Diphenylamine			3 U	2 U	2 U
Benzyl Alcohol			3 U	2 U	2 U
Benzoic Acid			67 U	50 U	50 U
Dibenzofuran			3 U	2 U	2 U
N-nitroso-di-n-propylamine			3 U	2 U	2 U
4-chloro-m-cresol			5 U	4 U	4 U
4,6-dinitro-o-cresol			27 U	20 U	20 U
Volatiles in µg/L (ppb)					
Ethylbenzene			1 U	1 U	1 U
Dibromochloromethane			2.5 U	3 U	3 U
Tetrachloroethene					
Total Xylenes			1 U	1 U	1 U
Total-1,2-Dichloroethene			1 U	1 U	1 U

Table 3-1 - Milwaukee Waterway Historical Groundwater Quality Data

Sample-ID	MW-5A	MW-5A	102291-04	9305569-17	9305569-18
Location	MW-5A	MW-5A	MW-5A	MW-5AT	MW-5AD
Sample Date	9/13/90	3/01/91	10/22/91	5/11/93	5/11/93
Conventionals in mg/L (unless otherwise noted)					
Calcium in µg/L	350000	36000			351000
Bicarb Alkalinity as CaCO3	800	800	840		570
Chloride	16000	14000	14000		15000
Magnesium in µg/L	1000000	100000			948000 J
Sodium in µg/L	8300000	8000000			7480000 J
Potassium in µg/L					265000
Ammonia as N in ppm	15	16	14		
pH				6.8	
Salinity in ppt	26.99	27	27.25	26.56	
Sulfide in ppm			1 UJ		1 U
Sulfate					1300
Total Phosphate as P					3.8
Total Alkalinity					570
Total Dissolved Solids	29000	28000	32000	29000	
Total Suspended Solids				80	
Total Organic Carbon	7.2	11	12	10	
Total Solids in Percent					
Total Volatile Solids in Percent					
Specific Conductance				36000	
Metals in µg/L (ppb)					
Antimony	20 U	20 U	19 U		5 U
Arsenic	5 U	5 U	10 UJ		3 U
Barium	130	140	139		
Beryllium	5 U	2 U	1 U		
Cadmium	5 U	1 U	4 U		
Chromium	10 U	10 U	19.7		
Copper	2.9 U	2	11 U		4 U
Iron	150	340	355		
Lead	10 U	6.6	10 U		20 UJ
Manganese	320	220	338		283
Mercury	1 U	1 U	0.2 U		
Nickel	7.1 U	2 U	3 U		6 U
Selenium	5 U	5 U	20 R		
Silver	15 U	5 U	3 U		
Thallium	20 U	2 U	20 UJ		
Zinc	12	5 B	2 U		26.9
Low Molecular Weight PAHs in µg/L (ppb)					
2-Methylnaphthalene	2 U	1 U	1 U		
Acenaphthene	2 U	1 U	1 U		
Acenaphthylene	2 U	1 U	1 U		
Anthracene	2 U	1 U	1 U		
Fluorene	2 U	1 U	1 U		
Phenanthrene	2 U	1 U	1 U		
Naphthalene	2 U	1 U	1 U		
Total LPAHs					

Table 3-1 - Milwaukee Waterway Historical Groundwater Quality Data

Sample-ID	MW-5A	MW-5A	102291-04	9305569-17	9305569-18
Location	MW-5A	MW-5A	MW-5A	MW-5AT	MW-5AD
Sample Date	9/13/90	3/01/91	10/22/91	5/11/93	5/11/93
High Molecular Weight PAHs in µg/L (ppb)					
Benzo(g,h,i)Perylene	2 U	1 U	1 U		
Benzo(a)Anthracene	2 U	1 U	1 U		
Benzo(a)Pyrene	2 U	1 U	1 U		
Chrysene	2 U	1 U	1 U		
Dibenzo(a,h)Anthracene	2 U	1 U	1 U		
Fluoranthene	2 U	1 U	1 U		
Indeno(1,2,3-c,d)Pyrene	2 U	1 U	1 U		
Pyrene	2 U	1 U	1 U		
Total Benzofluoranthenes					
Total HPAHs					
Phthalates in µg/L (ppb)					
Butyl Benzyl Phthalate	2 U	1 U	1 U		
Bis(2-Ethylhexyl) Phthalate	2 U	2	1		
Di-n-Butyl Phthalate	2 U	1 U	1 U		
Di-n-Octyl Phthalate	2 U	1 U	1 U		
Diethyl Phthalate	2 U	1 U	1 U		
Dimethyl Phthalate	2 U	1 U	1 U		
Phenols in µg/L (ppb)					
2,4-Dimethylphenol	2 U	1 U	1 U		
2-Methylphenol	2 U	1 U	1 U		
4-Methylphenol	2 U	1 U	1 U		
Pentachlorophenol	20 U	10 U	10 U		
Phenol	2 U	1 U	1 U		
Semivolatiles in µg/L (ppb)					
1,2,4-Trichlorobenzene	2 U	1 U	1 U		
1,2-Dichlorobenzene	2 U	1 U	1 U		
1,3-Dichlorobenzene	2 U	1 U	1 U		
1,4-Dichlorobenzene	2 U	1 U	1 U		
Hexachlorobenzene	4 U	2 U	2 U		
Hexachlorobutadiene	2 U	1 U	1 U		
N-Nitroso-Diphenylamine	2 U	1 U	1 U		
Benzyl Alcohol	2 U	1 U	1 U		
Benzoic Acid	50 U	25 U	25 U		
Dibenzofuran	2 U	1 U	1 U		
N-nitroso-di-n-propylamine	2 U	1 U	1 U		
4-chloro-m-cresol					
4,6-dinitro-o-cresol					
Volatiles in µg/L (ppb)					
Ethylbenzene	1 U	1 U	1 U		
Dibromochloromethane	3 U	3 U	1 U		
Tetrachloroethene	1 U	1 U	1 U		
Total Xylenes	1 U	1 U	1 U		
Total-1,2-Dichloroethene	1 U	1 U	1 U		

Table 3-1 - Milwaukee Waterway Historical Groundwater Quality Data

Sample-ID	2013: MW-6	MW-6	MW-6/S-1	MW-6	MW-6
Location	MW-6	MW-6	MW-6	MW-6	MW-6
Sample Date	3/09/88	6/22/89	10/05/89	9/13/90	3/01/91
Conventionals in mg/L (unless otherwise noted)					
Calcium in µg/L	370000	490000	680000	470000	47000
Bicarb Alkalinity as CaCO3	1 U	1100	1000	950	1200
Chloride	12000	12000	8000	13000	12000
Magnesium in µg/L	680000	1200000	640000	820000	83000
Sodium in µg/L	6800000	6400000	6300000	6800000	6800000
Potassium in µg/L					
Ammonia as N in ppm	4.6	5	4.5	0.84	0.8
pH					
Salinity in ppt	21.73	21.87	18	21.31	23
Sulfide in ppm					
Sulfate					
Total Phosphate as P					
Total Alkalinity					
Total Dissolved Solids	23000	23000	22000 B	24000	23000
Total Suspended Solids					
Total Organic Carbon	14	75	54	19	18
Total Solids in Percent					
Total Volatile Solids in Percent					
Specific Conductance					
Metals in µg/L (ppb)					
Antimony	5 U	5 U	9	20 U	20 U
Arsenic	5 U	12	20	5 U	5 U
Barium	90	240	20 U	110	120
Beryllium	5 U	5 U	5 U	5 U	2
Cadmium	5 U	15 UE	5 U	5 U	1 U
Chromium	5 U	5 U	5 U	10 U	10 U
Copper	1	15 UE	5 U	2.9 U	1
Iron	4900	5800	9700 B	7200	3700
Lead	10 U	30 U	10 U	10 U	3 U
Manganese	190	600	500	510	210
Mercury	1 U	1 U	3	1 U	1 U
Nickel	5 U	15 UE	5 U	7.1 U	2 U
Selenium	25	5 U	5 U	5 U	5 U
Silver	5 U	15 UE	5 U	15 U	5 U
Thallium	5 U	13 UD	5 U	20 U	2 U
Zinc	4 J	15 UE	9	12	6 B
Low Molecular Weight PAHs in µg/L (ppb)					
2-Methylnaphthalene	2 U	4 U	2 U	2 U	1 U
Acenaphthene	2 U	4 U	2 U	2 U	1 U
Acenaphthylene	2 U	4 U	2 U	2 U	1 U
Anthracene	2 U	4 U	2 U	2 U	1 U
Fluorene	2 U	4 U	2 U	2 U	1 U
Phenanthrene	2 U	4 U	2 U	2 U	1 U
Naphthalene	4 U	6	4 U	2 U	1 U
Total LPAHs					

Table 3-1 - Milwaukee Waterway Historical Groundwater Quality Data

Sample-ID	2013: MW-6	MW-6	MW-6/S-1	MW-6	MW-6
Location	MW-6	MW-6	MW-6	MW-6	MW-6
Sample Date	3/09/88	6/22/89	10/05/89	9/13/90	3/01/91
High Molecular Weight PAHs in µg/L (ppb)					
Benzo(g,h,i)Perylene	4 U	8 U	4 U	2 U	1 U
Benzo(a)Anthracene	2 U	4 U	2 U	2 U	1 U
Benzo(a)Pyrene	4 U	8 U	4 U	2 U	1 U
Chrysene	2 U	4 U	2 U	2 U	1 U
Dibenzo(a,h)Anthracene	4 U	8 U	4 U	2 U	1 U
Fluoranthene	2 U	4 U	2 U	2 U	1 U
Indeno(1,2,3-c,d)Pyrene	4 U	8 U	4 U	2 U	1 U
Pyrene	2 U	7	4	2 U	1
Total Benzofluoranthenes					
Total HPAHs					
Phthalates in µg/L (ppb)					
Butyl Benzyl Phthalate	2 U	4 U	2 U	2 U	1 U
Bis(2-Ethylhexyl) Phthalate	5 B	4 B	5	2 B	3
Di-n-Butyl Phthalate	2 U	4 U	2 U	2 U	1 U
Di-n-Octyl Phthalate	2 U	4 U	2 U	2 U	1 U
Diethyl Phthalate	2 U	4 U	2 U	2 U	1 U
Dimethyl Phthalate	2 U	4 U	2 U	2 U	1 U
Phenols in µg/L (ppb)					
2,4-Dimethylphenol	2 U	4 U	2 U	2	1 U
2-Methylphenol	2 U	4 U	2 U	2 U	1 U
4-Methylphenol	2 U	4 U	2 U	2 U	1 U
Pentachlorophenol	20 U	40 U	20 U	20 U	10 U
Phenol	2 U	4 U	2 U	2 U	1 U
Semivolatiles in µg/L (ppb)					
1,2,4-Trichlorobenzene	2 U	4 U	2 U	2 U	1 U
1,2-Dichlorobenzene	2 U	4 U	2 U	2 U	1 U
1,3-Dichlorobenzene	2 U	4 U	2 U	2 U	1 U
1,4-Dichlorobenzene	2 U	4 U	2 U	2 U	1 U
Hexachlorobenzene	4 U	8 U	4 U	4 U	2 U
Hexachlorobutadiene	2 U	4 U	2 U	2 U	1 U
N-Nitroso-Diphenylamine	2 U	4 U	2 U	2 U	1 U
Benzyl Alcohol	2 U	4 U	2 U	2 U	1 U
Benzoic Acid	51 U	100 U	50 U	50 U	25 U
Dibenzofuran	2 U	4 U	2 U	2 U	1 U
N-nitroso-di-n-propylamine	2 U	4 U	2 U	2 U	1 U
4-chloro-m-cresol	4 U	8 U	4 U		
4,6-dinitro-o-cresol	20 U	40 U	20 U		
Volatiles in µg/L (ppb)					
Ethylbenzene	1 U	1 U	1 U	1 U	1 U
Dibromochloromethane	2.5 U	3 U	3 U	3 U	3 U
Tetrachloroethene				1 U	1 U
Total Xylenes	1 U	1 U	1 U	1 U	1 U
Total-1,2-Dichloroethene	1 U	1 U	1 U	1 U	1 U

Table 3-1 - Milwaukee Waterway Historical Groundwater Quality Data

Sample-ID	102391-06	9305569-21	9305569-22	2013: MW-7	MW-7D
Location	MW-6	MW-6T	MW-6D	MW-7	MW-7
Sample Date	10/23/91	5/11/93	5/11/93	3/09/88	6/22/89
Conventionals in mg/L (unless otherwise noted)					
Calcium in µg/L			411000	240000	170000
Bicarb Alkalinity as CaCO3	1200		1200	1 U	3000
Chloride	11000		8900	12000	13000
Magnesium in µg/L			631000 J	750000	1200000
Sodium in µg/L			5140000 J	7100000	8500000
Potassium in µg/L			207000		
Ammonia as N in ppm	1.9			32	35
pH		6.5			
Salinity in ppt	20.36	18.83		21.83	22.99
Sulfide in ppm	2 J		1 U		
Sulfate			21000		
Total Phosphate as P			2.3		
Total Alkalinity			1200		
Total Dissolved Solids	24000	21000		24000	24000
Total Suspended Solids		670			
Total Organic Carbon	22	18		24	76
Total Solids in Percent					
Total Volatile Solids in Percent					
Specific Conductance		27000			
Metals in µg/L (ppb)					
Antimony	19 U		5 U	5 U	5 U
Arsenic	10 UJ		3 U	5 U	5 U
Barium	111			760	220
Beryllium	1 U			5 U	5 U
Cadmium	4 U			5 U	15 UE
Chromium	18.8			5 U	5 U
Copper	11 U		4 U	5 U	15 UE
Iron	6970			630	110
Lead	10 U		20 UJ	10 U	30 UE
Manganese	531		439	130	110
Mercury	0.2 U			1 U	1 U
Nickel	3 U		6 U	2 J	15 UE
Selenium	100 R			0.4 J	5 U
Silver	3 U			5 U	15 UE
Thallium	20 R			5 U	13 UD
Zinc	2 U		16.9	6	15 UE
Low Molecular Weight PAHs in µg/L (ppb)					
2-Methylnaphthalene	1 U			2 U	2 U
Acenaphthene	1 U			2 U	2 U
Acenaphthylene	1 U			2 U	2 U
Anthracene	1 U			2 U	2 U
Fluorene	1 U			2 U	2 U
Phenanthrene	1 U			2 U	2 U
Naphthalene	1 U			4 U	4 U
Total LPAHs					

Table 3-1 - Milwaukee Waterway Historical Groundwater Quality Data

Sample-ID	102391-06	9305569-21	9305569-22	2013: MW-7	MW-7D
Location	MW-6	MW-6T	MW-6D	MW-7	MW-7
Sample Date	10/23/91	5/11/93	5/11/93	3/09/88	6/22/89
High Molecular Weight PAHs in µg/L (ppb)					
Benzo(g,h,i)Perylene	1 U			4 U	4 U
Benzo(a)Anthracene	1 U			2 U	2 U
Benzo(a)Pyrene	1 U			4 U	4 U
Chrysene	1 U			2 U	2 U
Dibenzo(a,h)Anthracene	1 U			4 U	4 U
Fluoranthene	1 U			2 U	2 U
Indeno(1,2,3-c,d)Pyrene	1 U			4 U	4 U
Pyrene	1 U			2 U	2 U
Total Benzofluoranthenes					
Total HPAHs					
Phthalates in µg/L (ppb)					
Butyl Benzyl Phthalate	1 U			2 U	2 U
Bis(2-Ethylhexyl) Phthalate	1 J			2 U	2
Di-n-Butyl Phthalate	1 U			2 U	2 U
Di-n-Octyl Phthalate	1 U			2 U	2 U
Diethyl Phthalate	1 U			2 U	2 U
Dimethyl Phthalate	1 U			2 U	2 U
Phenols in µg/L (ppb)					
2,4-Dimethylphenol	1 U			2 U	2 U
2-Methylphenol	1 U			2 U	2 U
4-Methylphenol	1 U			2 U	2 U
Pentachlorophenol	10 U			20 U	20 U
Phenol	1 U			2 U	2 U
Semivolatiles in µg/L (ppb)					
1,2,4-Trichlorobenzene	1 U			2 U	2 U
1,2-Dichlorobenzene	1 U			2 U	2 U
1,3-Dichlorobenzene	1 U			2 U	2 U
1,4-Dichlorobenzene	1 U			2 U	2 U
Hexachlorobenzene	2 U			4 U	4 U
Hexachlorobutadiene	1 U			2 U	2 U
N-Nitroso-Diphenylamine	1 U			2 U	2 U
Benzyl Alcohol	1 U			2 U	2 U
Benzoic Acid	26 UJ			50 U	50 U
Dibenzofuran	1 U			2 U	2 U
N-nitroso-di-n-propylamine	1 U			2 U	2 U
4-chloro-m-cresol				4 U	4 U
4,6-dinitro-o-cresol				20 U	20 U
Volatiles in µg/L (ppb)					
Ethylbenzene	1 U			1 U	1 U
Dibromochloromethane	1 U			2.5 U	3 U
Tetrachloroethene	1 U				
Total Xylenes	1 U			1 U	1 U
Total-1,2-Dichloroethene	1 U			1 U	1 U

Table 3-1 - Milwaukee Waterway Historical Groundwater Quality Data

Sample-ID	MW-7	MW-7/S-1	MW-7	MW-7	102391-07
Location	MW-7	MW-7	MW-7	MW-7	MW-7
Sample Date	6/22/89	10/05/89	9/13/90	2/28/91	10/23/91
Conventionals in mg/L (unless otherwise noted)					
Calcium in µg/L	170000	230000	200000	19000	
Bicarb Alkalinity as CaCO3	2900	3000	3000	3000	3100
Chloride	13000	11000	13000	12000	11000
Magnesium in µg/L	1100000	800000	900000	88000	
Sodium in µg/L	8400000	7900000	7500000	6800000	
Potassium in µg/L					
Ammonia as N in ppm	35	36	34	32	28
pH					
Salinity in ppt	23.06	22.6	22.81	23	22.97
Sulfide in ppm					2 J
Sulfate					
Total Phosphate as P					
Total Alkalinity					
Total Dissolved Solids	24000	25000 B	25000	24000	24000
Total Suspended Solids					
Total Organic Carbon	82	43	29	30	210
Total Solids in Percent					
Total Volatile Solids in Percent					
Specific Conductance					
Metals in µg/L (ppb)					
Antimony	5 U	5 U	20 U	20 U	19 U
Arsenic	5 U	5 U	5 U	5 U	10 U
Barium	230	90	250	240	228
Beryllium	5 U	5 U	5 U	2 U	1 U
Cadmium	15 UE	5 U	5 U	1 U	4 U
Chromium	5 U	5 U	10 U	10 U	5 U
Copper	15 UE	5 U	2.9 U	1 U	11 U
Iron	500	320 B	1700	1900	909
Lead	30 UE	10 U	10 U	3 U	10 U
Manganese	91	82	110	79	95.9
Mercury	1 U	1 U	1 U	1 U	0.2 U
Nickel	15 UE	5 U	7.1 U	2 U	3 U
Selenium	5 U	5 U	5 U	5 U	100 R
Silver	15 UE	5 U	15 U	5 U	3 U
Thallium	13 UD	5 U	20 U	2 U	20 UJ
Zinc	15 UE	8	11	3 B	2 U
Low Molecular Weight PAHs in µg/L (ppb)					
2-Methylnaphthalene	2 U	2 U	2 U	1 U	1 U
Acenaphthene	2 U	2 U	2 U	1 U	1 U
Acenaphthylene	2 U	2 U	2 U	1 U	1 U
Anthracene	2 U	2 U	2 U	1 U	1 U
Fluorene	2 U	2 U	2 U	1 U	1 U
Phenanthrene	2 U	2 U	2 U	1 U	1 U
Naphthalene	4 U	4 U	2 U	1 U	1 U
Total LPAHs					

Table 3-1 - Milwaukee Waterway Historical Groundwater Quality Data

Sample-ID	MW-7	MW-7/S-1	MW-7	MW-7	102391-07
Location	MW-7	MW-7	MW-7	MW-7	MW-7
Sample Date	6/22/89	10/05/89	9/13/90	2/28/91	10/23/91
High Molecular Weight PAHs in µg/L (ppb)					
Benzo(g,h,i)Perylene	4 U	4 U	2 U	1 U	1 U
Benzo(a)Anthracene	2 U	2 U	2 U	1 U	1 U
Benzo(a)Pyrene	4 U	4 U	2 U	1 U	1 U
Chrysene	2 U	2 U	2 U	1 U	1 U
Dibenzo(a,h)Anthracene	4 U	4 U	2 U	1 U	1 U
Fluoranthene	2 U	2 U	2 U	1 U	1 U
Indeno(1,2,3-c,d)Pyrene	4 U	4 U	2 U	1 U	1 U
Pyrene	2 U	2 U	2 U	1 U	1 U
Total Benzofluoranthenes					
Total HPAHs					
Phthalates in µg/L (ppb)					
Butyl Benzyl Phthalate	2 U	2 U	2 U	1 U	1 U
Bis(2-Ethylhexyl) Phthalate	3	2 U	2 U	10	1 U
Di-n-Butyl Phthalate	2 U	2 U	2 U	1 U	1 U
Di-n-Octyl Phthalate	2 U	2 U	2 U	1 U	1 U
Diethyl Phthalate	2 U	2 U	2 U	1 U	1 U
Dimethyl Phthalate	2 U	2 U	2 U	1 U	1 U
Phenols in µg/L (ppb)					
2,4-Dimethylphenol	2 U	2 U	3	1 U	1 U
2-Methylphenol	2 U	2 U	2 U	1 U	1 U
4-Methylphenol	2 U	2 U	2 U	1 U	1 U
Pentachlorophenol	20 U	20 U	20 U	11 U	10 U
Phenol	2 U	2 U	2 U	1 U	1 U
Semivolatiles in µg/L (ppb)					
1,2,4-Trichlorobenzene	2 U	2 U	2 U	1 U	1 U
1,2-Dichlorobenzene	2 U	2 U	2 U	1 U	1 U
1,3-Dichlorobenzene	2 U	2 U	2 U	1 U	1 U
1,4-Dichlorobenzene	2 U	2 U	2 U	1 U	1 U
Hexachlorobenzene	4 U	4 U	4 U	2 U	2 U
Hexachlorobutadiene	2 U	2 U	2 U	1 U	1 U
N-Nitroso-Diphenylamine	2 U	2 U	2 U	1 U	1 U
Benzyl Alcohol	2 U	2 U	2 U	1 U	1 U
Benzoic Acid	50 U	50 U	50 U	28 U	25 UJ
Dibenzofuran	2 U	2 U	2 U	1 U	1 U
N-nitroso-di-n-propylamine	2 U	2 U	2 U	1 U	1 U
4-chloro-m-cresol	4 U	4 U			
4,6-dinitro-o-cresol	20 U	20 U			
Volatiles in µg/L (ppb)					
Ethylbenzene	1 U	1 U	1 U	1 U	1 U
Dibromochloromethane	3 U	3 U	3 U	3 U	1 U
Tetrachloroethene			1 U	1 U	1 U
Total Xylenes	1 U	1 U	1 U	1 U	1 U
Total-1,2-Dichloroethene	1 U	1 U	1 U	1 U	1 U

Table 3-1 - Milwaukee Waterway Historical Groundwater Quality Data

Sample-ID	9305569-13	9305569-14
Location	MW-7T	MW-7D
Sample Date	5/11/93	5/11/93
Conventionals in mg/L		
(unless otherwise noted)		
Calcium in µg/L		195000
Bicarb Alkalinity as CaCO3		270
Chloride		12000
Magnesium in µg/L		785000 J
Sodium in µg/L		6010000 J
Potassium in µg/L		266000
Ammonia as N in ppm		
pH	7.1	
Salinity in ppt	22.46	
Sulfide in ppm		1 U
Sulfate		10 U
Total Phosphate as P		8.1
Total Alkalinity		270
Total Dissolved Solids	25000	
Total Suspended Solids	130	
Total Organic Carbon	40	
Total Solids in Percent		
Total Volatile Solids in Percent		
Specific Conductance	32000	
Metals in µg/L (ppb)		
Antimony		5 U
Arsenic		3 U
Barium		
Beryllium		
Cadmium		
Chromium		
Copper		4 U
Iron		
Lead		20 UJ
Manganese		90
Mercury		
Nickel		6 U
Selenium		
Silver		
Thallium		
Zinc		14 U
Low Molecular Weight PAHs in µg/L (ppb)		
2-Methylnaphthalene		
Acenaphthene		
Acenaphthylene		
Anthracene		
Fluorene		
Phenanthrene		
Naphthalene		
Total LPAHs		

Table 3-1 - Milwaukee Waterway Historical Groundwater Quality Data

Sample-ID	9305569-13	9305569-14
Location	MW-7T	MW-7D
Sample Date	5/11/93	5/11/93
High Molecular Weight PAHs in µg/L (ppb)		
Benzo(g,h,i)Perylene		
Benzo(a)Anthracene		
Benzo(a)Pyrene		
Chrysene		
Dibenzo(a,h)Anthracene		
Fluoranthene		
Indeno(1,2,3-c,d)Pyrene		
Pyrene		
Total Benzofluoranthenes		
Total HPAHs		
Phthalates in µg/L (ppb)		
Butyl Benzyl Phthalate		
Bis(2-Ethylhexyl) Phthalate		
Di-n-Butyl Phthalate		
Di-n-Octyl Phthalate		
Diethyl Phthalate		
Dimethyl Phthalate		
Phenols in µg/L (ppb)		
2,4-Dimethylphenol		
2-Methylphenol		
4-Methylphenol		
Pentachlorophenol		
Phenol		
Semivolatiles in µg/L (ppb)		
1,2,4-Trichlorobenzene		
1,2-Dichlorobenzene		
1,3-Dichlorobenzene		
1,4-Dichlorobenzene		
Hexachlorobenzene		
Hexachlorobutadiene		
N-Nitroso-Diphenylamine		
Benzyl Alcohol		
Benzoic Acid		
Dibenzofuran		
N-nitroso-di-n-propylamine		
4-chloro-m-cresol		
4,6-dinitro-o-cresol		
Volatiles in µg/L (ppb)		
Ethylbenzene		
Dibromochloromethane		
Tetrachloroethene		
Total Xylenes		
Total-1,2-Dichloroethene		

Data Qualifier Definitions:

U	The material was analyzed for, but was not detected above the level of the associated value. The associated value is either the sample quantitation limit or the sample detection limit.
J	The associated value is an estimated quantity.
R	The data are unusable (note: analyte may or may not be present).
UJ	The material was analyzed for, but was not detected. The associated value is an estimate and may be inaccurate or imprecise.
UE	Same as UJ (for metals analyses).
B	Blank contamination.
UD	Dilution.

Blank spaces indicate parameter was not analyzed.

Table 3-2 – Summary of Sitcum Sediment Column Leaching Tests and Groundwater Quality Analyses

Analyte	Sitcum Sediment Column Leaching Tests			Groundwater Analyses		
	Detection Frequency	Average Concentration	Concentration Range	Detection Frequency	Average Concentration	Concentration Range
Salinity in ppt	17/18	3.9	0.07U to 15.47	59/64	13.0	0.1U to 27.25
Total Organic Carbon in mg/L	17/18	62.2	1.0U to 220	64/64	22.1	3.9 to 210
Ammonia as Nitrogen in mg/L	17/18	2.4	0.1U to 5.8	63/64	7.1	0.38 to 36
Priority Pollutants in µg/L						
Antimony	10/18	80.0	5.0U to 153	6/64	5.4	1.9U to 25U
Arsenic	17/18	160.0	5U to 568	7/64	6.2	1.0U to 20
Cadmium	5/18	1.0	0.22U to 1.4	4/64	3.2	0.4U to 6.0
Total Chromium	-------	Not Analyzed	-------	24/64	7.0	1.0U to 19.7
Copper	15/18	245.0	2.4U to 1,110	24/64	7.4	1.0U to 24
Lead	16/18	118.0	0.11U to 370	7/64	5.3	1.0U to 30U
Manganese	-------	Not Analyzed	-------	64/64	750.0	11 to 6,500
Mercury	10/18	0.9	0.2U to 3.2	2/64	2.0	0.2U to 3.0
Nickel	15/18	21.0	1.5U to 55.4	8/64	7.1	0.3 to 29
Zinc	15/18	77.0	7.3U to 211	41/64	31.0	0.2U to 420
Pentachlorophenol	8/18	0.3	0.1U to 0.95	-------	Not Analyzed	-------
Bis(2-Ethylhexyl) Phthalate	18/18	8.6	1 to 45	39/65	3.9	1.0JB to 25

U Not detected at the indicated detection limit
B Analyte also detected in associated blank sample
J Estimated concentration
ppt Parts per Thousand

JOBS\320308\TABLE3-2.WK1

Table 3-3 - Analytical Methods and Detection Limit Goals for Routine Groundwater Monitoring Program

Analytes	CLP CRDL	Laucks Method Detection Limit		EPA Method
		Fresh	Saline	
Metals in µg/L				
Arsenic	10.0	1 - 5	1 - 5	SW 7061
Copper	25.0	2.5 (1)	250 (2)	CLP 3/90 SOW
Lead	3.0	1 - 2	1 - 2	CLP 3/90 SOW
Manganese	15.0	1.5 (1)	150 (2)	CLP 3/90 SOW
Mercury	0.2	0.2	0.2	CLP 3/90 SOW
Nickel	40.0	2.0 (1)	200 (2)	CLP 3/90 SOW
Zinc	20.0	1.0 (1)	100 (2)	CLP 3/90 SOW
Calcium	5000	500	5000	CLP 3/90 SOW
Magnesium	5000	500	5000	CLP 3/90 SOW
Sodium	5000	500	5000	CLP 3/90 SOW
Potassium	5000	500	5000	CLP 3/90 SOW
Other Inorganic Parameters in mg/L unless noted				
Total Dissolved Solids	NA	2.0	2.0	MC 160.1
Total Suspended Solids	NA	2.0	2.0	MC 160.2
Sulfate as SO4	NA	1.0	1.0	MC 300.0
Total Phosphates as PO4	NA	0.01	0.01	MC 365.2
Chloride	NA	10.0	100.0	MC 300.0 #
Sulfide	NA	1.0	1.0	MC 376.1
Total Alkalinity as CaCO3	NA	2.0	2.0	MC 310.1
Bicarbonate Alkalinity as CaCO3	NA	2.0	2.0	MC 310.1
Salinity (parts per thousand)	NA	0.02	0.02	SM 209C
Total Organic Carbon (mg/L)	NA	1.0	1.0	MC 415.2
Specific Conductance (micromhos/cm)	NA	5.0	5.0	MC 120.1
pH (unitless)	NA	0.1	0.1	MC 150.1

Notes:

(1) Derived from analysis of the CLP 3/90 Inductively Coupled Plasma digest concentrated 10 times for the purpose of achieving lower detection limits.

(2) Derived from analysis of the CLP 3/90 Inductively Coupled Plasma digest, unconcentrated. CLP detection limits have been adjusted upward by a factor of 10 to reflect the need for dilution of the digest due to the matrix. Actual dilution is likely to range between 2 and 10 times so there is a possibility some limits in some samples may be lower than these.

Acronyms and Abbreviations:

CLP - Contract Laboratory Program

CRDL - Contract Reporting Detection Limit (for inorganics)

Laucks - Laucks Testing Laboratories

Fresh - Fresh water

Saline - Saline water

CLP 3/90 SOW - United States Environmental Protection Agency, 1990, March. Contract Laboratory Program. Statement of Work, for Organic and Inorganic Analyses, Multimedia, Multiconcentration, OLM01.0 and ILM01.0.

SW - EPA, 1986. Test Methods for Evaluating Solid Wastes (SW 846).

Actual Sample Detection Limits may vary from Method Detection Limits depending on the influences of limited sample volume, matrix interferences, blank contamination, and moisture content of sediments.

JOBS\320308\TABLE3-3.WK1

Table 3-4 - Methods of Analysis and Detection Limit Goals for MW-14

Analytes	CLP CRDL/CRQL	Laucks Method Detection Limit		EPA Method
		Fresh	Saline	
Metals in µg/L				
Antimony	60.0	2.5 (1)	250 (2)	CLP 3/90 SOW
Arsenic	10.0	1 - 5	1 - 5	SW 7061
Cadmium	5.0	0.5 (1)	50 (2)	CLP 3/90 SOW
Chromium	10.0	1.0 (1)	100 (2)	CLP 3/90 SOW
Copper	25.0	2.5 (1)	250 (2)	CLP 3/90 SOW
Lead	3.0	1-2	1-2	CLP 3/90 SOW
Mercury	0.2	0.2	0.2	CLP 3/90 SOW
Nickel	40.0	2.0 (1)	200 (2)	CLP 3/90 SOW
Silver	10.0	1.0 (1)	100 (2)	CLP 3/90 SOW
Zinc	20.0	1.0 (1)	100 (2)	CLP 3/90 SOW
Calcium	5000	500	5000	CLP 3/90 SOW
Magnesium	5000	500	5000	CLP 3/90 SOW
Sodium	5000	500	5000	CLP 3/90 SOW
Potassium	5000	500	5000	CLP 3/90 SOW
Other Inorganic Parameters in mg/L unless noted				
Total Dissolved Solids	NA	2.0	2.0	MC 160.1
Total Suspended Solids	NA	2.0	2.0	MC 160.2
Nitrate + Nitrite - N	NA	0.01	0.01	MC 353.2
Sulfate as SO4	NA	1.0	1.0	MC 300.0
Total Phosphate as PO4	NA	0.01	0.01	MC 365.2
Fluoride	NA	0.2	0.2	MC 340.2
Chloride	NA	10.0	100.0	MC 300.0 #
Ammonia as N	NA	0.01	0.01	MC 350.1
Cyanide	5.0	1.0	1.0	MC 335.3
Sulfide	NA	1.0	1.0	MC 376.1
Total Alkalinity as CaCO3	NA	2.0	2.0	MC 310.1
Bicarbonate Alkalinity as CaCO3	NA	2.0	2.0	MC 310.1
Salinity (parts per thousand)	NA	0.02	0.02	SM 209C
Total Organic Carbon (mg/L)	NA	1.0	1.0	MC 415.2
Specific Conductance (micromhos/cm)	NA	5.0	5.0	MC 120.1
pH (unitless)	NA	0.1	0.1	MC 150.1
Phenols in µg/L				
Phenol	10	1 (3)	1 (3)	CLP 3/90 SOW
4-Methylphenol	10	1 (3)	1 (3)	CLP 3/90 SOW
Pentachlorophenol	50	10 (3)	10 (3)	CLP 3/90 SOW
2-Methylphenol	10	1 (3)	1 (3)	CLP 3/90 SOW
2,4-Dimethylphenol	10	1 (3)	1 (3)	CLP 3/90 SOW
LPAH Compounds in µg/L				
Naphthalene	10	1 (3)	1 (3)	CLP 3/90 SOW
Acenaphthene	10	1 (3)	1 (3)	CLP 3/90 SOW
Fluorene	10	1 (3)	1 (3)	CLP 3/90 SOW
Anthracene	10	1 (3)	1 (3)	CLP 3/90 SOW
2-Methylnaphthalene	10	1 (3)	1 (3)	CLP 3/90 SOW
Acenaphthylene	10	1 (3)	1 (3)	CLP 3/90 SOW
Phenanthrene	10	1 (3)	1 (3)	CLP 3/90 SOW

Table 3-4 - Methods of Analysis and Detection Limit Goals for MW-14

Analytes	CLP CRDL/CRQL	Laucks Method Detection Limit		EPA Method
		Fresh	Saline	
HPAH Compounds in µg/L				
Fluoranthene	10	1 (3)	1 (3)	CLP 3/90 SOW
Benzo(a)Anthracene	10	1 (3)	1 (3)	CLP 3/90 SOW
Benzo(b)Fluoranthene	10	1 (3)	1 (3)	CLP 3/90 SOW
Benzo(k)Fluoranthene	10	1 (3)	1 (3)	CLP 3/90 SOW
Benzo(a)Pyrene	10	1 (3)	1 (3)	CLP 3/90 SOW
Dibenzo(a,h)Anthracene	10	1 (3)	1 (3)	CLP 3/90 SOW
Pyrene	10	1 (3)	1 (3)	CLP 3/90 SOW
Chrysene	10	1 (3)	1 (3)	CLP 3/90 SOW
Indeno(1,2,3-cd)Pyrene	10	1 (3)	1 (3)	CLP 3/90 SOW
Benzo(g,h,i)Perylene	10	1 (3)	1 (3)	CLP 3/90 SOW
Chlorinated Aromatic Compounds in µg/L				
1,3-Dichlorobenzene	10	1 (3)	1 (3)	CLP 3/90 SOW
1,2-Dichlorobenzene	10	1 (3)	1 (3)	CLP 3/90 SOW
Hexachlorobenzene	10	1 (3)	1 (3)	CLP 3/90 SOW
1,4-Dichlorobenzene	10	1 (3)	1 (3)	CLP 3/90 SOW
1,2,4-Trichlorobenzene	10	1 (3)	1 (3)	CLP 3/90 SOW
Hexachloroethane	10	2 (3)	2 (3)	CLP 3/90 SOW
Chlorinated Aliphatic Compounds in µg/L				
Hexachlorobutadiene	10	1 (3)	1 (3)	CLP 3/90 SOW
Phthalate Esters in µg/L				
Di-Methylphthalate	10	1 (3)	1 (3)	CLP 3/90 SOW
Di-a-Butylphthalate	10	1 (3)	1 (3)	CLP 3/90 SOW
Bis(2-ethylhexyl)phthalate	10	1 (3)	1 (3)	CLP 3/90 SOW
Di-Ethylphthalate	10	1 (3)	1 (3)	CLP 3/90 SOW
Butylbenzylphthalate	10	1 (3)	1 (3)	CLP 3/90 SOW
Di-n-Octyl phthalate	10	1 (3)	1 (3)	CLP 3/90 SOW
Misc. Oxygenated Organic Compounds in µg/L				
Benzoic Acid	NA	25 (3)	25 (3)	CLP 3/90 SOW
Benzyl Alcohol	NA	1 (3)	1 (3)	CLP 3/90 SOW
Dibenzofuran	10	1 (3)	1 (3)	CLP 3/90 SOW
N-Nitrosodiphenylamine	10	1 (3)	1 (3)	CLP 3/90 SOW
Pesticides/PCBs in µg/L				
4,4'-DDE	0.10	0.10	0.10	CLP 3/90 SOW
4,4'-DDD	0.10	0.10	0.10	CLP 3/90 SOW
4,4'-DDT	0.10	0.10	0.10	CLP 3/90 SOW
Total PCBs	NA	0.05	0.05	

Table 3-4 - Methods of Analysis and Detection Limit Goals for MW-14

Notes:

(1) Derived from analysis of the CLP 3/90 Inductively Coupled Plasma digest concentrated 10 times for the purpose of achieving lower detection limits.

(2) Derived from analysis of the CLP 3/90 Inductively Coupled Plasma digest, unconcentrated, CLP detection limits have been adjusted upward by a factor of 10 to reflect the need for dilution of the digest due to the matrix. Actual dilution is likely to range between 2 and 10 times so there is a possibility some limits in some samples may be lower than these.

(3) Values are reported as long as spectral confirmation can be made (No J-flags).

(4) The value for analysis of a saline sample by graphite furnace for thallium content is a best approximation.

– Not determined.

Alternate method MC 325 may be employed.

Acronyms and Abbreviations:

CLP -	Contract Laboratory Program
CRDL/CRQL	Contract Reporting Detection Limit (for inorganics)/Contract Reporting Quantitation Limit (for organics)
Laucks -	Laucks Testing Laboratories
Fresh -	Fresh water
Saline -	Saline water
CLP 3/90 SOW	United States Environmental Protection Agency. 1990, March. Contract Laboratory Program, Statement of Work, for Organic and Inorganic Analyses, Multimedia, multiconcentration, OLM01.0 and ILM01.0.
SW -	EPA, 1986. Test Methods for Evaluating Solid Wastes (SW 846).
MC -	Methods for the Chemical Analysis of Water and Wastes.
SM -	Standard Methods, 16th edition, 1985.
NA -	Not Applicable
mg/L -	milligrams per liter
µg/L -	micrograms per liter
N -	Nitrogen
PO4 -	Phosphate
CaCO3 -	Calcium Carbonate
micromhos/cm -	micromhos per centimeter

Actual Sample Detection Limits may vary from Method Detection Limits depending on the influences of limited sample volume, matrix interferences, blank contamination, and moisture content of sediments.

320308\OMMP.fr

Monitoring Well Network Plan

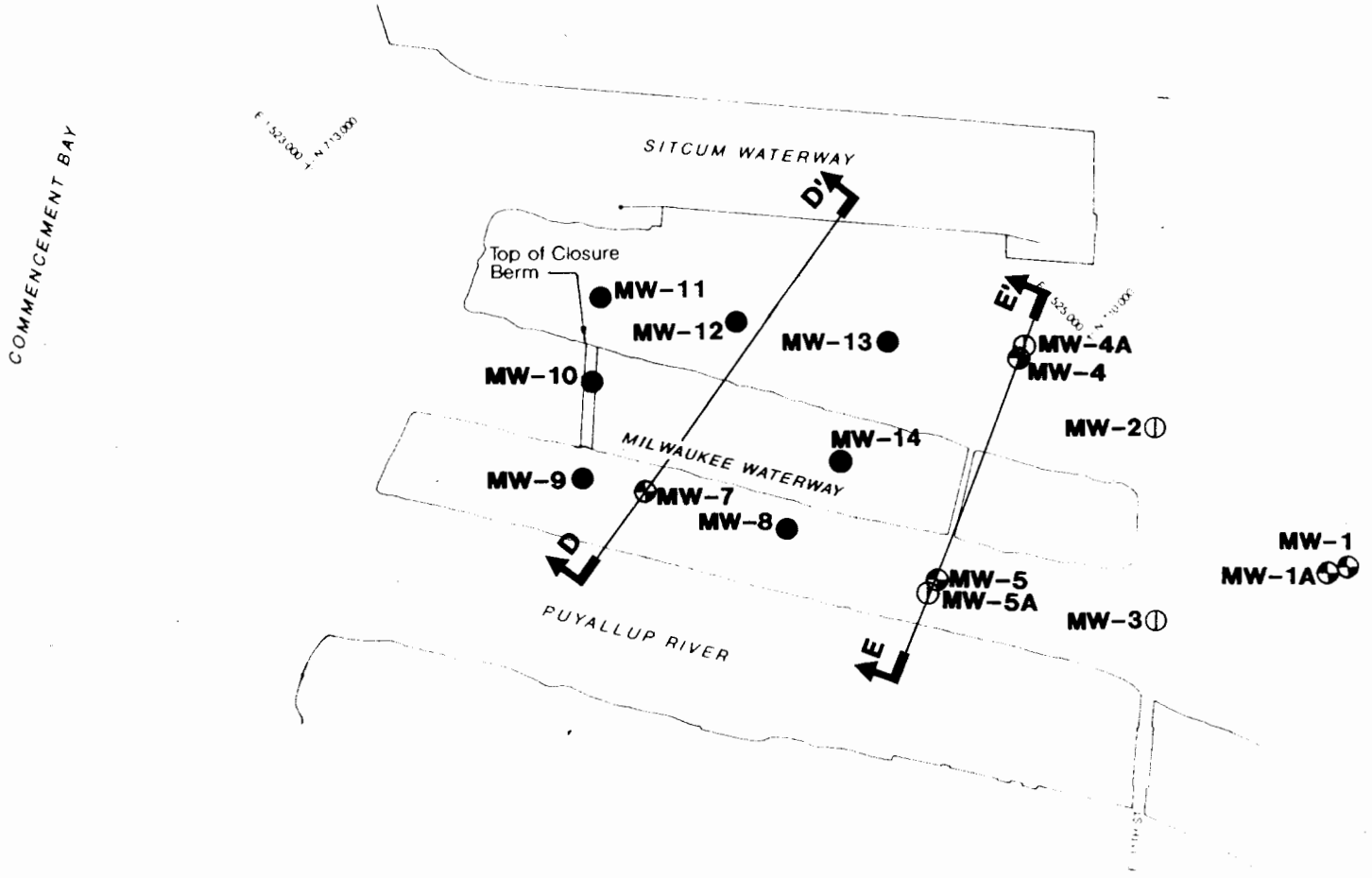

N

0 800 1600

Scale in Feet

●MW-9	New Monitoring Well Location and Number
⊕MW-1	Existing Monitoring Well Location and Number for Use in Long-Term Monitoring
ⓘMW-2	Existing Monitoring Well Location and Number not for Use in Long-Term Monitoring
D D'	Profile Location and Designation See Figure 3-8

HARTCROWSER

J-3203-08 4/94

Figure 3-1

Groundwater Quality Monitoring Decision Framework

Stage 1

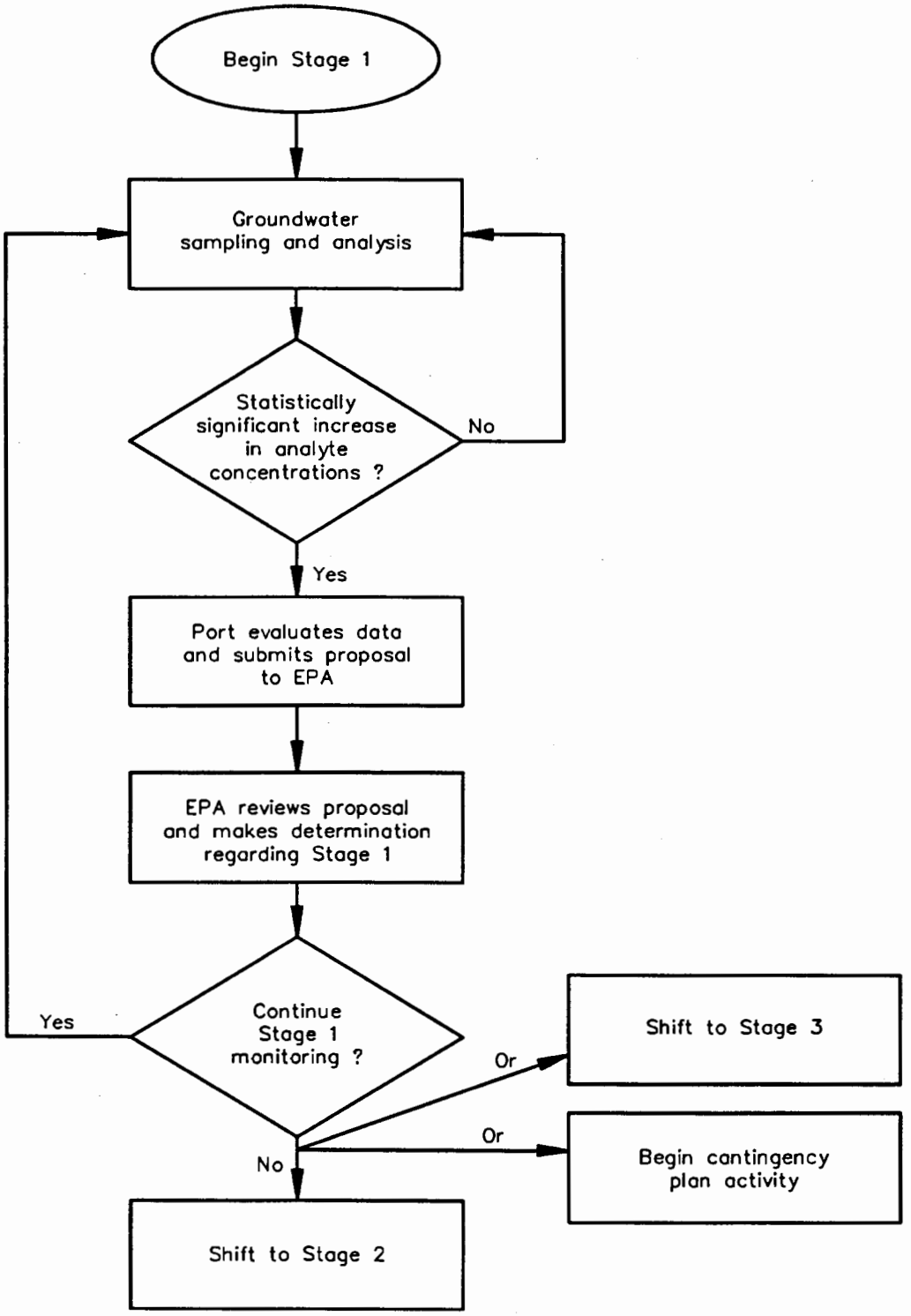

HC.pcp

EJC 2/17/94
32030811

HARTCROWSER
J-3203-08 2/94
Figure 3-2

Groundwater Quality Monitoring Decision Framework

Stage 2

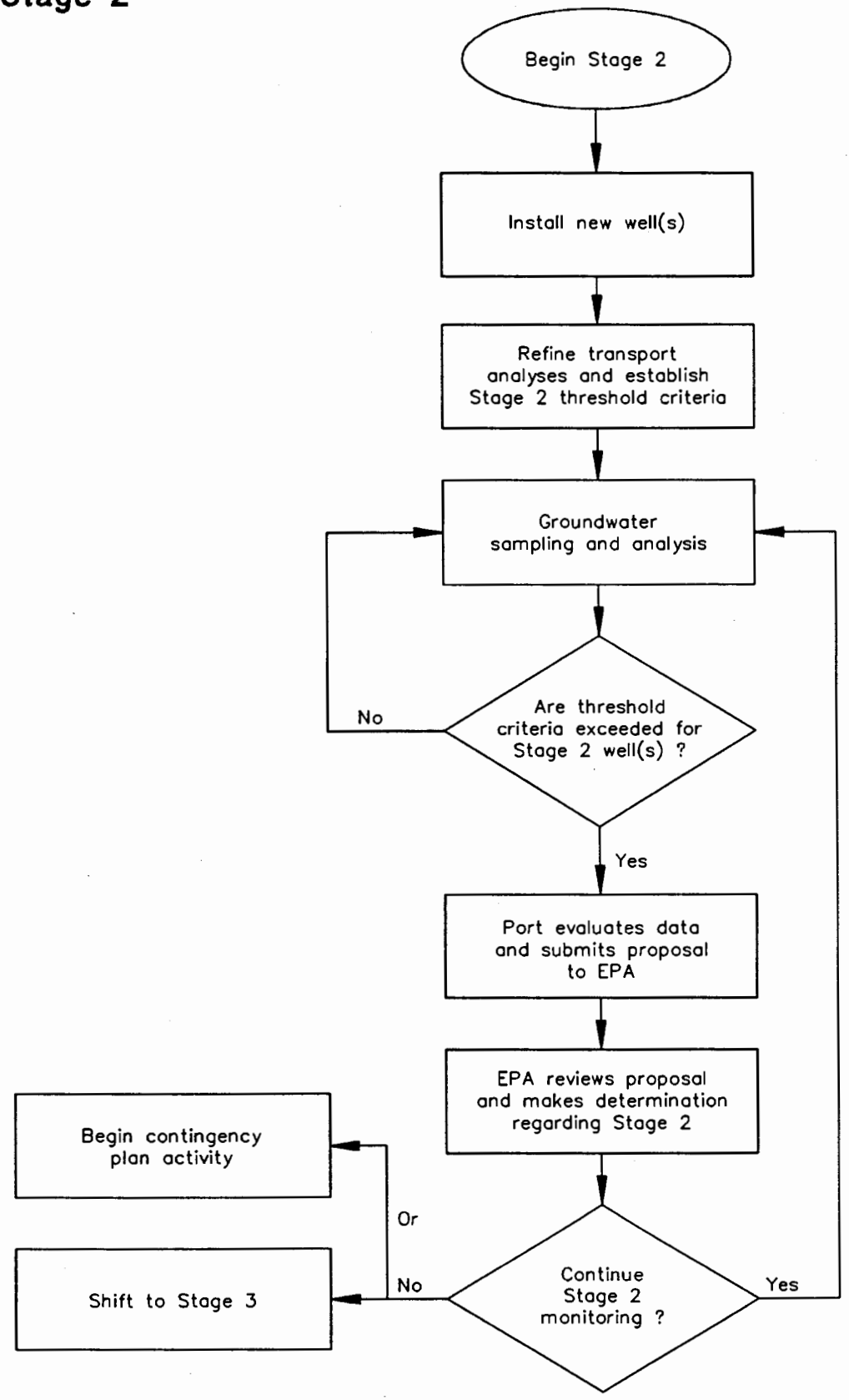

Note: If groundwater quality in Stage 1 well(s) returns to baseline conditions, the Port will evaluate data and may propose to EPA to continue Stage 2 or return to Stage 1.

HARTCROWSER

J-3203-08 4/93

Figure 3-3

32030804 EJC 4/93 1=1

Groundwater Quality Monitoring Decision Framework
Stage 3

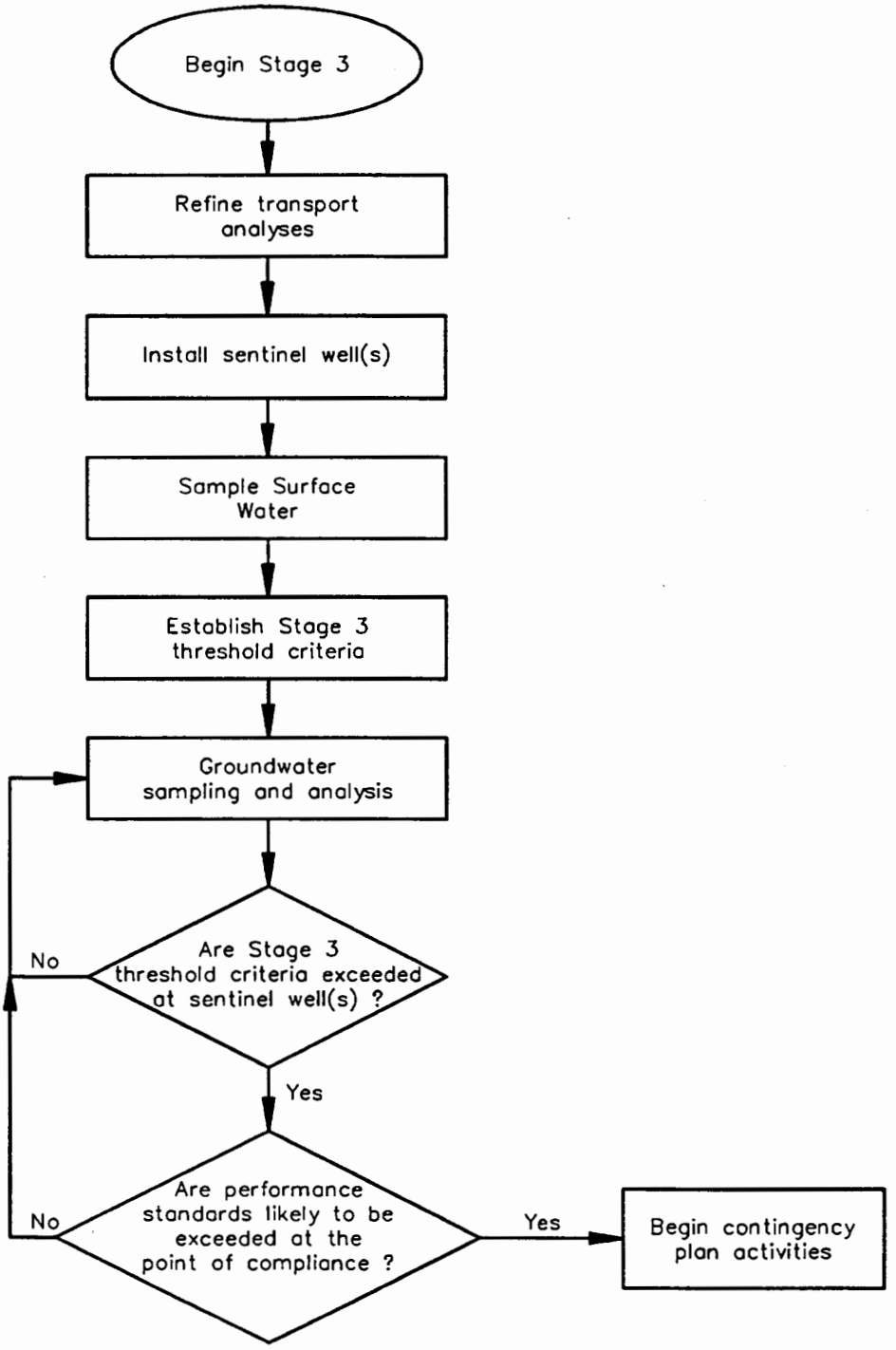

Note: If groundwater quality in Stage 1 well(s) returns to baseline or Stage 2 well(s) returns to below Stage 2 threshold criteria, the Port will evaluate data and submit a proposal to EPA to determine if Stage 3 monitoring continues.

HARTCROWSER
J-3203-08 4/94
Figure 3-4

EJC 4/8/94
32030812
HC.pcp

Site and Exploration Plan

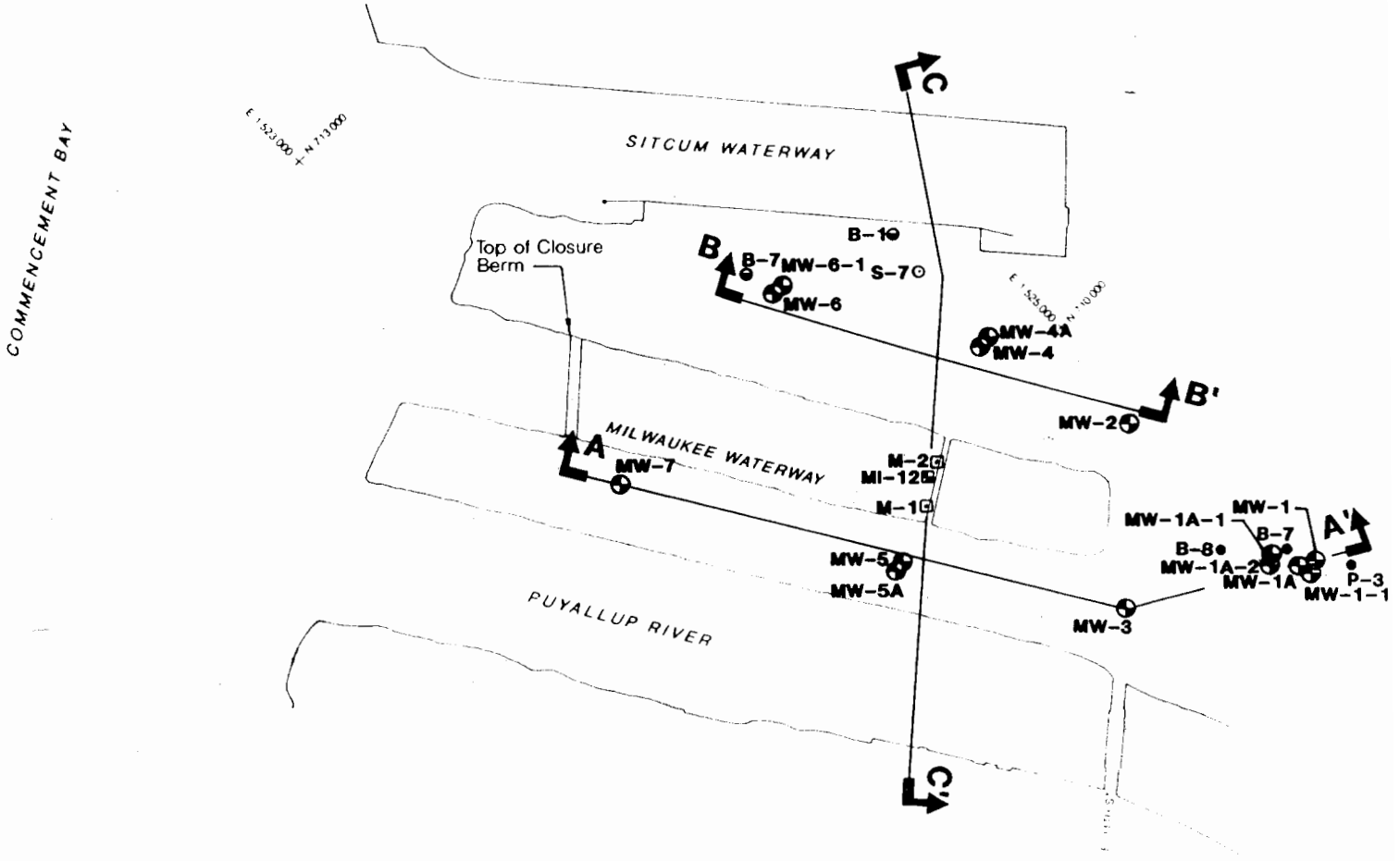

Note: Base map prepared from aerial photo on the Port of Tacoma by CH2M Hill, dated August 2, 1986.

⊙S-7	Hart Crowser Boring (November 1982)
●B-1	Hart Crowser Boring (before 1982)
⊡M-1	Hart Crowser Boring
•P-3	Hart Crowser Probe (November 1983)
⊠MI-12	Tetra Tech Surface Sample (1984)
⊕MW-1	Monitoring Well Location and Number (Hart Crowser February 1988)
A A'	Profile Location and Designation See Figures 3-6 and 3-7

N

0 800 1600

Scale in Feet

HARTCROWSER

J-3203-08 4/94

Figure 3-5

Generalized Subsurface Profile A–A' and B–B'

(See Figure 3–5 for Plan View)

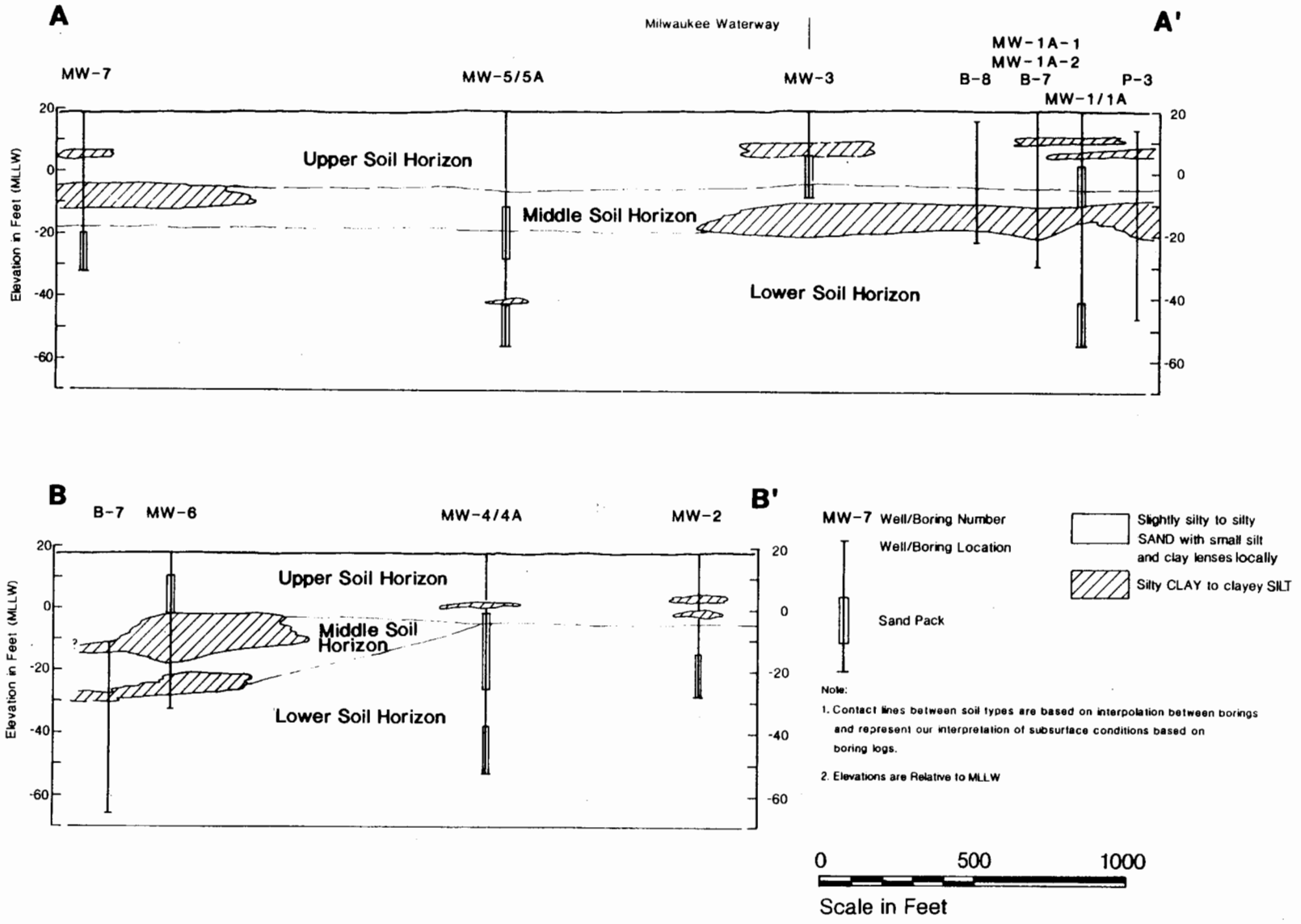

HARTCROWSER
J-3203-08 4/94
Figure 3-6

Generalized Subsurface Profile C–C'

(See Figure 3–5 for Plan View)

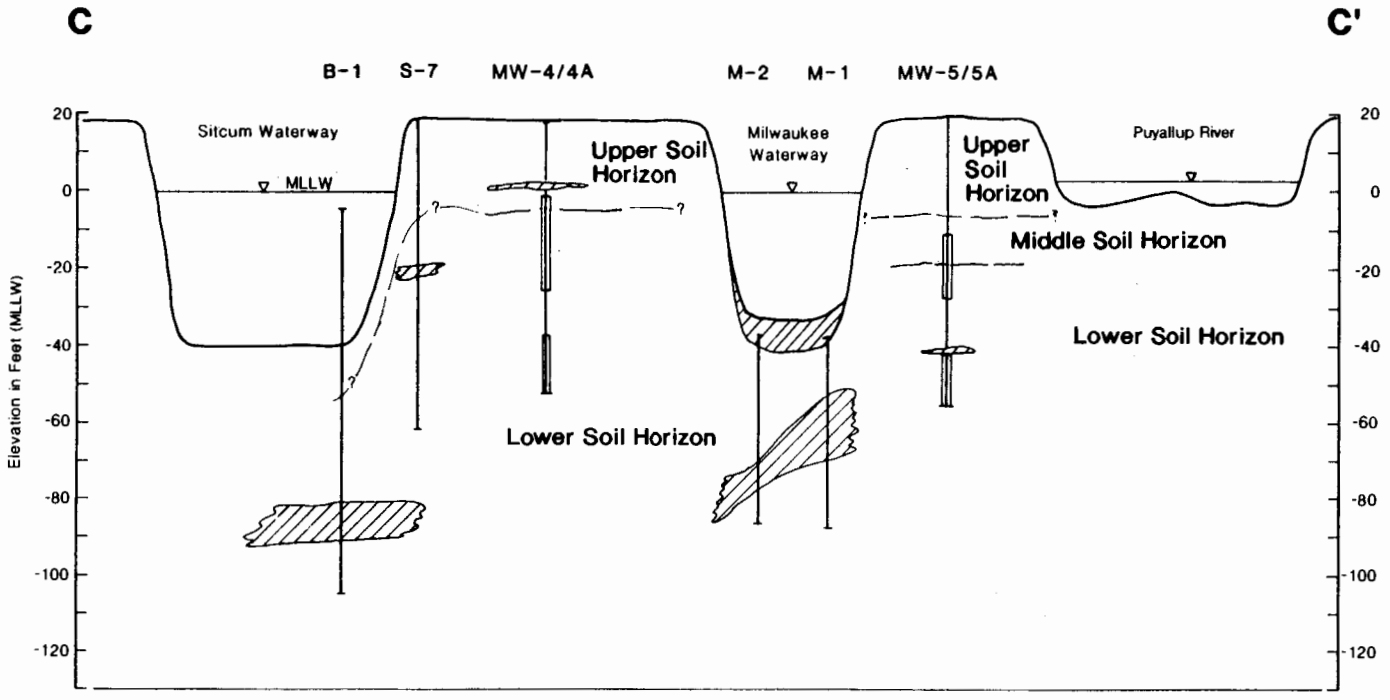

Note:

1. Contact lines between soil types are based on interpolation between borings and represent our interpretation of subsurface conditions based on boring logs.
2. Elevations are Relative to MLLW

MW-4/4A Well/Boring Number

Well/Boring Location

Sand Pack

Slightly silty to silty SAND with small silt and clay lenses locally

Silty CLAY to clayey SILT

0 500 1000

Scale in Feet

HARTCROWSER J-3203-08 4/94 Figure 3-7

Generalized Subsurface Profile D–D' and E–E'

Monitoring Well Screened Intervals

(See Figure 3–1 for Plan View)

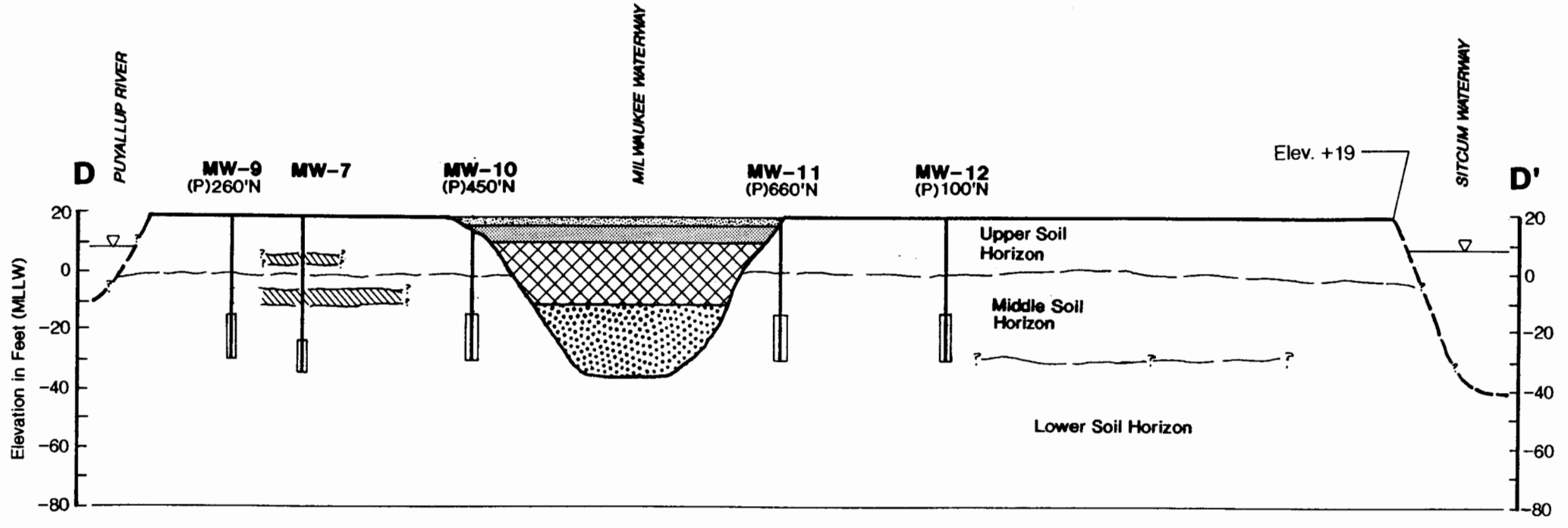

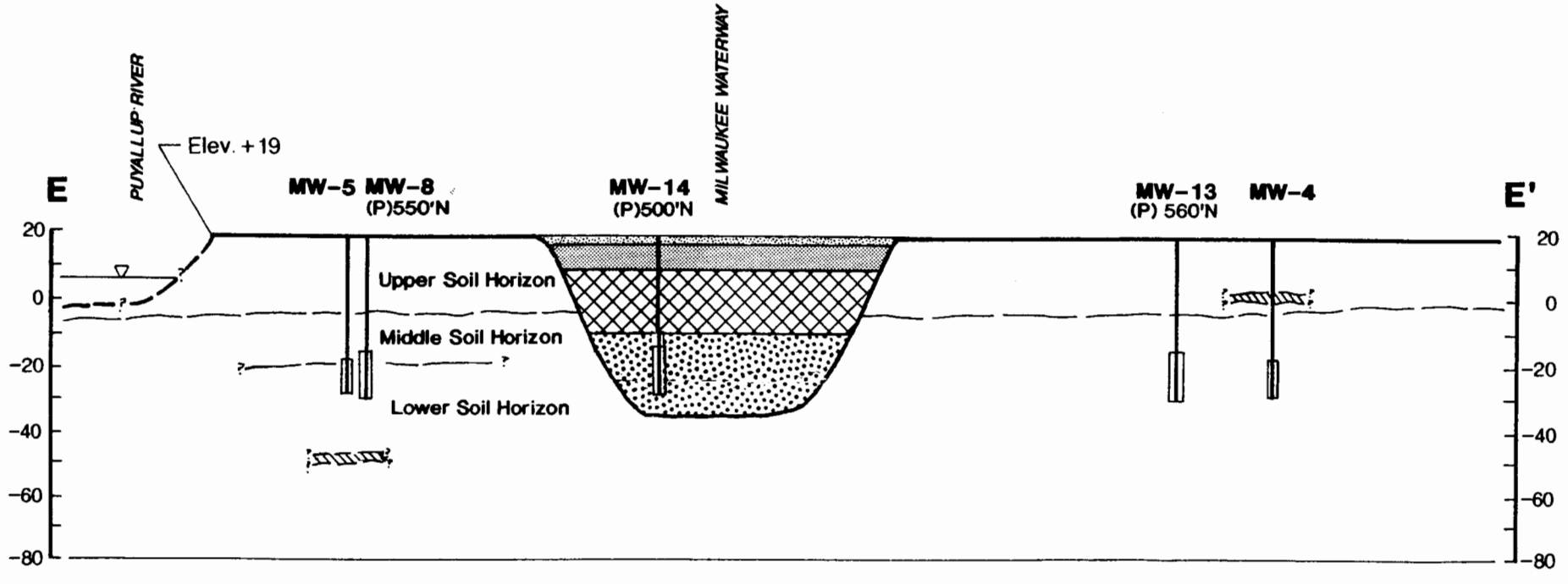

MW–9 Well Number

(P)400'N Offset Distance and Direction

Well Location

Screened Interval (Mean Tide Level)

Water Level

Soils

Slightly silty to silty SAND with small silt and clay lenses locally

Silty CLAY to clayey SILT

Sediments

Blair Clean Sediments

Blair Sediments Designated for Confined Disposal

Sitcum Sediments, Mud Lake Sediments and Initial Placement of Blair Sediments Designated for Confined Disposal

Ballast and Paving

Notes: 1. Contact lines between soil types are based on interpolation between borings and represent our interpretation of subsurface conditions based on boring logs.

2. Elevations are relative to MLLW.

Horizontal Scale in Feet

0 200 400

0 50 100

Vertical Scale in Feet

Vertical Exaggeration x 4

HARTCROWSER

J–3203–08 4/94

Figure 3–8

4.0 SEDIMENT QUALITY MONITORING

This section describes the sediment quality monitoring program designed to address the effectiveness of sediment removal as part of the Sitcum Waterway Remediation Project. Sediment quality monitoring objectives of this program are to:

- Select indicator chemicals;
- Describe the statistical basis for determining the frequency and location of Phase 1 and Phase 2 sediment sampling for the initial post-construction monitoring program;
- Describe the method, identified by the Port and EPA, for evaluating the effectiveness of remediation with respect to sediment quality objectives (SQOs);
- Describe the monitoring data chemical analysis; and
- Develop a decision framework for evaluating Sitcum Waterway sediment quality.

Based on sampling and analysis of Sitcum Waterway sediments presented in the Phase 1 and Phase 2 Data Report (Port, 1992a), the Port has identified a dredge plan which generally includes Phase 1 sediment removal to an elevation approximately 2 feet below the elevations of the deepest sample locations that are above SQOs and are technically feasible for dredging. The 2 foot additional cut provides a high level of confidence that the material exceeding SQOs would be effectively removed by conventional dredging. In the Phase 2 area, sediments above the design slope will be removed. Further, constituent distribution and detection frequency determined in the Phase 1 and Phase 2 Data Report (general trend of fewer problem chemicals and lower concentrations observed with increasing sediment depth in the core), indicate that metals, PAHs, bis(2-ethylhexyl)phthalate, dibenzofuran, and total PCBs are the primary concerns in the waterway.

Consequently, metals, PAHs, bis(2-ethylhexyl)phthalate, dibenzofuran, and total PCBs have been selected as indicator chemicals because these chemical classes have the highest detection frequency and the highest percent SQO exceedence in the Sitcum Waterway (Table 4-1). The success of the Sitcum Waterway Remediation Project can be confirmed by these indicator chemicals.

In addition to post-construction sediment quality monitoring in the Sitcum Waterway, this section of the OMMP presents the post-construction and long-term sediment quality monitoring activities to be performed on the

habitat/mitigation area, and the long-term monitoring activities in the Sitcum Waterway. These activities include:

- Post-construction sampling and analysis of Blair Waterway sediments prior to placement of the clean imported materials which will provide the select surface substrate;
- Long-term sampling and analysis of the fine-grained sediments on the surface of the habitat/mitigation area in years 2, 4, and 10;
- Long-term sampling and analysis of the Phase 1 area once every five years unless an Additional Response Action is required; and
- Long-term monitoring for the Phase 2 area will be identified and implemented pursuant to the Additional Response Action provisions set forth in Section VII of the Sitcum Waterway Remediation Project Consent Decree.

The sediment quality monitoring program master schedule is presented on Figure 2-2.

4.1 Selection of Indicator Chemicals

The Phase 1 and Phase 2 Data Report reports the analysis of 106 samples (including 11 replicates) for constituents specified in Table 6-2 of the Final Project Plans (Port, 1991). Samples were analyzed for conventional parameters, including total solids, total volatile solids (TVS), total organic carbon (TOC), ammonia, sulfides, pH, metals, pesticides, total PCBs, PAHs, and other semivolatile organics.

The spatial extent of detection and distribution of observed concentrations corroborated previous investigations in which higher concentrations of chemicals were found, in general, along the Terminal 7 side and at the head of the Sitcum Waterway. As to the distribution with depth, there appeared to be a general trend of fewer chemicals and lower concentrations detected in deeper sediment horizons.

Evaluation of the entire data set for Phase 1 and Phase 2 sediment samples indicated that metals, PAHs, bis(2-ethylhexyl)phthalate, dibenzofuran, and total PCBs had elevated detection frequencies and percent SQO exceedences (Table 4-1). Based on these data, the Port has developed this sediment monitoring program to focus on metals, PAHs, bis(2-ethylhexyl)phthalate, dibenzofuran, and total PCBs.

4.2 General Monitoring Approach to Phase 1 Area

Remediation success of the Phase 1 area will be determined by evaluating the post-construction sediment quality. This will be done by evaluating individual samples based on the SQOs, the sediment chemistry of surrounding samples, calculated SRALs (see Technical Memorandum; Attachment 4-1), and historical data. Additionally, a statistical analysis of the Phase 1 area data collected as part of the post-construction sampling will be performed as discussed below. The Port will evaluate all of these data and provide its recommendation(s) to EPA as to the success of the remediation, and/or propose additional sediment quality sampling to identify the extent (area and depth) of SQO exceedence, and/or propose implementation of dredging additional sediments for placement in the Milwaukee Waterway confined disposal site below +9 feet MLLW (pre-consolidation and settlement elevation), and/or identify any Additional Response Action(s) (i.e., natural recovery). The Port will submit its recommendation(s) for EPA approval.

The statistical analysis involves calculating 95th percentile confidence limits. The number of sediment samples and the selection of sampling locations were determined considering the need for statistical comparisons of sediment concentrations against SQOs. The study design initially divides the Phase 1 area into three subareas, allowing the Phase 1 area to be considered as one entire area, or for each subarea to exist as an independent statistical sample or any combination thereof (Figure 4-1). As appropriate, alternative subareas, which incorporate portions or all of the Phase 2 area, can also be established for statistical analysis (Section 4.3).

4.2.1 Phase 1 Area Work

Sediment Sampling Locations. The Phase 1 area sediment sampling locations are shown on Figure 4-1. They were selected by non-aligned systematic sampling location methods.

Sediment Sampling Methods. Sediment sampling will be performed by van Veen methods. The entire retrieved sediment sample will be retained for chemical analysis. Field methods are discussed in detail in Appendix B.

Chemical Analysis. Chemical analysis of the constituents listed in Table 4-4 will be performed to assess the effectiveness of the removal of the Phase 1 area sediments which exceeded the SQOs as part of the Sitcum Waterway Remediation Project. The Quality Assurance Project Plan (QAPP) for chemistry is presented in Appendix B.

Data Evaluation. Data from the chemistry testing will be tabulated and validated according to the QAPP presented in Appendix B.

Reporting. Chemistry data will be presented in a written data report and electronic form.

4.2.2 Estimation of Number of Samples

Sediments within the Phase 1 area of the Sitcum Waterway will be sampled by van Veen grab sampler methods. To ensure that the mean sediment concentration for the Phase 1 area of the Sitcum Waterway can be determined, with a 1 in 20 chance of being in error (α=0.05), the estimated number of sediment sampling locations required were determined from sediment quality metal data collected as part of the Final Project Plans and reported in the Phase 1 and Phase 2 Data Report.

The number of sediment sampling locations was based on an approach (Hale, 1972) developed to approximate the number of independent samples required to estimate the true mean of a lognormal distribution. In this approach, the sample variance of metal concentrations detected in the lowermost core section reported in the Phase 1 and Phase 2 Data Report was assumed to be an unbiased estimator of metal variance for this study. The number of samples required to approximate the true mean concentration, with a specified alpha error level (α=0.05), was estimated using the relationship between the variance (S^2), sample size (N=20), and a pre-specified relative error in the estimated mean (where p=100(1-α)% is the percent confidence required that this error is not exceeded). For this study, we have accepted a 15 percent relative error. The following relationship is used:

$$N = \frac{Z^2_{(1-\alpha/2)} S^2}{\ln(d+1)^2}$$

Sediment quality data, collected as part of the Final Project Plans and reported in the Phase 1 and Phase 2 Data Report, are assumed to be approximately lognormally distributed; therefore, the data were logarithmically transformed for this analysis, using the formula Z=log(X+1). The number of samples required to approximate the mean metal concentration in the Sitcum Waterway sediments after remedial action are in the range of 1 to 25, depending on the metal (Table 4-2). Based on this analysis, the Port concluded that 24 van Veen samples are required for the Phase 1 areas of the Sitcum Waterway which exceeded the SQOs.

4.2.3 Randomization of Phase 1 Area Sampling Locations

Representative coverage of the Phase 1 areas of the Sitcum Waterway which exceeded the SQOs, was desired, and systematic sampling was used to define location coordinates in preference to simple random sampling. Unaligned systematic grid sampling, where locations are randomly and independently placed within each subdivision of the grid, was used for the Phase 1 area (Gilbert, 1987).

The Phase 1 areas of the Sitcum Waterway, which exceeded the SQOs, was divided into three roughly equal sections. Each section was then divided into eight equal area subsections. The first of eight sampling locations within each section row was randomly and independently placed within the first grid. Using the x coordinate from the first grid row, three randomly selected y coordinates were used to determine sampling points in the other three grids. This process was repeated for both rows within each subsection. Phase 1 area van Veen sediment quality sampling locations are presented on Figure 4-1. Pre-determined sample location coordinates are listed in Table 4-3.

4.3 General Monitoring Approach to Phase 2 Area

Remediation success of the Phase 2 area will be determined by evaluating the post-construction sediment quality. This will be done by evaluating individual samples based on the SQOs, the sediment chemistry of surrounding samples, calculated SRALs (see Technical Memorandum; Attachment 4-1), and historical data. Additionally, a statistical analysis of the Phase 2 area data collected as part of the post-construction sampling will be performed as discussed below. The Port will evaluate all of these data and provide its recommendation(s) to EPA as to the success of the remediation, and/or propose additional sediment quality sampling to identify the extent (area and depth) of SQO exceedence, and/or identify any Additional Response Action(s) (i.e., natural recovery, and/or enhanced natural recovery through thin layer placement). The Port will submit its recommendation(s) for EPA approval.

The statistical analysis involved calculating 95th percentile confidence limits. The number of sediment samples and the selection of sampling locations were determined considering the need for statistical comparisons of sediment concentrations against SQOs. Based on the Phase 1 and Phase 2 area post-construction monitoring results, the Phase 2 area may be treated as an independent statistical unit, or in combination with one or more Phase 1 subareas (Figure 4-1).

4.3.1 Phase 2 Area Work

Sediment Sampling Locations. The Phase 2 area sediment sampling locations are shown on Figure 4-1. They were selected by systematic transect sample location methods.

Sediment Sampling Methods. Phase 2 area sediments that are on top of the existing engineered and riprapped side slopes will be removed concurrently with the Phase 1 area remediation. Sediment still remaining will be sampled. Sediment sampling will be performed by diver methods. Depending on conditions at the individual sampling locations, samples will be taken by either manual corer or other applicable methods in order to collect samples of sediment still remaining above the riprap, or easily accessible between the riprap. Methods of sediment collection within the Phase 2 area are described in detail in Appendix B.

Chemical Analysis. Chemical analysis of the constituents listed in Table 4-4 will be performed to assess remaining sediment quality after Phase 2 area sediment removal as part of the Sitcum Waterway Remediation Project. The Quality Assurance Project Plan (QAPP) for chemistry is presented in Appendix B.

Data Evaluation. Data from the chemistry testing will be tabulated and validated according to the QAPP presented in Appendix B.

Reporting. Chemistry data will be presented in a written data report and electronic form.

4.3.2 Estimation of Number of Samples

Sediments within the Phase 2 area of the Sitcum Waterway will be sampled by diver methods. After removal of the Phase 2 area sediments, as part of the Sitcum Waterway Remediation Project, remaining sediments may be located between the riprap; therefore, sample locations and sampling methods may vary depending on the actual distribution of the remaining sediments. In order to determine the extent and quality of the remaining sediment, samples will be collected approximately every 500 feet along the Phase 2 area (except as discussed in Section 4.3.3) resulting in ten Phase 2 area sediment samples.

4.3.3 Randomization of Phase 2 Area Sampling Locations

Representative coverage of the Phase 2 area of the Sitcum Waterway was desired and systematic sampling was used to define location coordinates in preference to simple random sampling (Gilbert, 1987). The Phase 2 area was treated as a single transect (5,318 feet long). The first location on the transect was determined randomly and independently. Additional locations

(nine) were then systematically placed 500 feet apart to cover the full length. All locations were placed at the mid-point of Phase 2 area. The lack of adequate, accessible sediment for sampling at the Phase 2 area predetermined sites may require alternative sites be sampled. During field sampling activities, should the pre-determined sample locations have insufficient sediments, alternative sites that contain sufficient amounts of sediments will be looked for and identified. Should alternative sites need to be identified in the field due to insufficient sediments, those areas with insufficient sediments shall be reported and considered as part of the decision framework process (see Section 4.6.3). Phase 2 sediment quality sampling locations are presented on Figure 4-1. Pre-determined sample location coordinates are listed in Table 4-3.

4.4 Monitoring Schedule and Reporting

The sediment quality monitoring program's sampling activities will be implemented immediately following the completion of the removal of the Phase 1 and Phase 2 sediments which exceeded the SQOs, as part of the Sitcum Waterway Remediation Project. The results of the sediment quality monitoring program activities will be presented to and discussed with EPA within 4 weeks of completing the sediment quality monitoring field program. This timeframe provides sufficient time to allow additional Sitcum Phase 1 area sediments to be dredged, if necessary, and placed below the +9 feet MLLW pre-consolidation and settlement elevation. The formal report of the sediment quality monitoring activities will be submitted to EPA within 4 months of sediment sampling. The sediment quality monitoring program master schedule is presented on Figure 2-2.

4.5 Monitoring Data Chemical Analysis

Sediment samples will be analyzed for the constituents listed in Table 4-4. Detection limit goals and method references are also provided in this table. Actual sample detection limits may vary from method detection limits depending on the influences of limited sample volume, matrix interferences, blank contamination, and moisture content. The number of analyses expected to be performed are as follows:

Sitcum Waterway Sample Area	Number of Tests
Phase 1 Area	24
Phase 2 Area	10

Quality assurance samples will be analyzed as follows:

- Sediment MS/MSD (MS/dup for inorganics) at a frequency of one per batch; and

- One sediment standard reference material where such are available.

In the event of insufficient sample volume for any reason, blank spikes would be substituted for matrix spikes. The complete quality assurance program is contained in the Quality Assurance Project Plan for Sediment Quality Analysis Chemistry (Attachment B-1).

4.6 Sediment Quality Monitoring Decision Framework

As discussed previously, remediation success of the Phase 1 and Phase 2 areas will be determined by an approach that evaluates individual samples based on SQOs, surrounding surface chemistry, calculated SRALs, historical data, and 95th percentile upper confidence limits (UL) of the mean sediment concentration for a particular chemical in the Phase 1 or Phase 2 areas and/or any appropriate subarea(s). This section provides additional information on the calculation of 95th percentiles and presents the decision framework process by which all available information will be evaluated and considered.

4.6.1 Phase 1 Area

The UL, the point below which at least 100(1-α) percent of the data falls, will be computed for the Phase 1 area (N=24) to evaluate the post-construction sediment quality with the SQOs. The data will be assumed to follow a lognormal distribution. Therefore, statistical analyses will be performed on natural logarithm transformed data (EPA, 1989) and statistical results will be back transformed. The upper one-sided 100(1-α) percent confidence limit (α=0.05) for the true sample mean will be computed for the Phase 1 area to evaluate sediment quality by the following equation:

$$UL_{(1-\alpha)} = X_{mean} + \frac{t_{(1-\alpha)}(S)}{\sqrt{N}}$$

where $t_{(1-\alpha)}$=1.740 *with* α=0.05 *and* N=24

In the event that it is appropriate to statistically evaluate post-construction sediment quality of the Phase 1 area by subareas, the actual number of samples (N) will vary accordingly.

4.6.2 Phase 2 Area

The UL, the point below which at least 100(1-α) percent of the data falls, will be computed for the Phase 2 area to evaluate the post-construction

sediment quality with the SQOs. The data will be assumed to follow a lognormal distribution. Therefore, statistical analyses will be performed on natural logarithm transformed data (EPA, 1989) and statistical results will be back transformed. The upper one-sided 100(1-α) percent confidence limit (α=0.05) for the true sample mean will be computed for the Phase 2 area sediment quality with the SQOs by the following equation:

$$UL_{(1-\alpha)} = X_{mean} + \frac{t_{(1-\alpha)}(S)}{\sqrt{N}}$$

$$where\ t_{(1-\alpha)} = 1.833\ with\ \alpha = 0.05\ and\ N = 10$$

In the event that it is appropriate to statistically evaluate post-construction sediment quality of the Phase 2 area by subareas or if portions of the Phase 2 area is considered as part of the Phase 1 area or Phase 1 subareas, the actual number of samples (N) will vary accordingly.

4.6.3 Decision Framework Process

This section presents the decision framework process for evaluating the effectiveness of sediment removal in the Phase 1 and Phase 2 areas of the Sitcum Waterway (Figure 4-2). The Port will consider all available sediment chemistry data to assess remediation success and/or propose additional sediment quality sampling to identify the extent (area and depth) of SQO exceedence, and/or propose implementation of dredging additional Phase 1 area sediments for placement in the Milwaukee Waterway confined disposal site below +9 feel MLLW, and/or identify any Additional Response Action(s) (i.e., natural recovery, and/or enhanced natural recovery through thin layer placement) that may be appropriate for either Phase 1 and/or Phase 2 area sediments. The Port will submit its recommendation(s) for EPA approval.

The surface chemistry data collected as part of this OMMP sediment quality monitoring program will be evaluated based on SQOs. The absence of SQO exceedences will indicate that the sediment remediation was successful. In the event that SQO exceedences are noted, surface chemistry from adjacent sampling locations, calculated SRALs, and applicable historical data will be reviewed to assess the extent and degree of the exceedence(s). Further, the determination of 95th percentile ULs will strengthen this understanding by presenting a statistical basis for evaluating SQO exceedence(s). Together, this information will indicate whether the SQO exceedence(s) is isolated or indicative of an area that exceeds the SOQs and/or SRALs.

4.7 Long-Term Monitoring of the Phase 1 Area (Not for Additional Response Actions)

Long-term monitoring of the Phase 1 area for metals, PAHs, bis(2-ethylhexyl)phthalate, dibenzofuran, and total PCBs (Table 4-4) will be performed, once every five years, as part of the five-year review process outlined in the ROD and further discussed in the Consent Decree. EPA and the Port reserve the right to modify this list of indicator chemicals, as appropriate, based on the results of the post-construction sediment quality monitoring program or previous long-term monitoring results. Based on EPA's notice to proceed with the work under the Consent Decree, the five-year period begins on the effective date of the Consent Decree. The Port will submit a Long-Term Sediment Quality Monitoring Plan one year prior to the five-year review. This schedule would continue until the Port, with EPA approval, proposes to modify it. The City of Tacoma's Sitcum Waterway Enhanced Stormwater Program will be considered in any long-term monitoring program. The sediment quality monitoring program master schedule is presented on Figure 2-2.

4.8 Long-Term Monitoring of the Phase 2 Area

Long-term monitoring for the Phase 2 area will be identified and implemented pursuant to the Additional Response Action provisions set forth in Section VII of the Sitcum Waterway Remediation Project Consent Decree. The results of the post-construction sediment monitoring will be considered as part of that process.

4.9 Post-Construction Sediment Quality of the Habitat/Mitigation Area

As part of the overall sediment quality monitoring program for the Sitcum Waterway Remediation Project, the Port will sample the surface of the Blair Waterway sediments placed in the habitat/mitigation fill at six locations. This will occur before placement of the clean imported materials which will provide the select surface substrate. The purpose of this sampling and analysis is to ensure that these materials are of the anticipated quality. Also, these samples will provide a baseline for comparison with future sediment chemistry data collected pursuant to the OMMP. The results of habitat/mitigation area sediment sampling will be presented to and discussed with EPA within 4 weeks of completing the sediment quality monitoring field program. This will enable timely placement of the select surface substrate. The report of the habitat/ mitigation area sediment quality monitoring activities will be submitted to EPA within 4 months of sediment sampling. The sediment quality monitoring program master schedule is presented on Figure 2-2.

Sampling will be performed at six locations as shown on Figure 4-3. These locations were assigned using the same statistical approach as

described in Section 4.2.3. Northings and eastings for each location are presented in Table 4-5. The samples will be obtained by a van Veen grab sampler using methods detailed in Appendix B. Sediment sampling, comprised of the entire van Veen sampler volume retrieved, will be analyzed for the parameters listed in Table 4-6. The data will be tabulated and validated according to procedures outlined in Appendix B.

4.10 Long-Term Sediment Quality Monitoring of the Habitat/Mitigation Area

The Port will sample and analyze sediments in the habitat/mitigation area in monitoring years 2, 4, and 10. The purpose of this sampling and analysis is to assess whether potential ongoing sources are resulting in contamination of the habitat/mitigation area. Six samples would be taken at locations determined based on the distribution of finer-grained sediments on the surface of the habitat/mitigation area. Samples would be obtained using van Veen sampling methods or hand excavation methods, depending on the elevation of the sampling location. Only the surface 2 centimeters of sediment would be analyzed. Each sample obtained would be analyzed for the metals and PAHs listed in Table 4-4 and according to the Quality Assurance Project Plan presented in Appendix B.

The results of sediment quality monitoring program activities will be presented to and discussed with EPA within eight weeks of completing the long-term sediment quality field program. The formal report of the long-term habitat/mitigation area sediment quality monitoring activities will be submitted to EPA within 4 months of sampling. If review of sampling and analysis results indicates a sediment quality issue, the Port will notify EPA. Should this occur, the data will be reviewed, the Port will propose, and EPA will determine appropriate actions as deemed necessary. The sediment quality monitoring program master schedule is presented on Figure 2-2.

Once the results of the year 10 sampling and analysis activities of this sediment quality monitoring program have been submitted to EPA, the Port will propose, and EPA will determine whether additional long-term monitoring is required. The Port and EPA may consider long-term monitoring for the metals and PAHs listed in Table 4-4 to be performed once every five years as part of the five-year review process outlined in the ROD and further discussed in the Consent Decree.

Table 4-1 - Percentages of Detection and SQO Exceedence Information for Indicator Chemicals in Phase 1 and Phase 2 Sediment Samples

	Phase 1 Area		Phase 2 Area	
Name	Percent Detection	Percent Exceedence	Percent Detection	Percent Exceedence
Metals in ppm				
Antimony	53.0	0.6	85.1	0.0
Arsenic	92.0	24.4	97.9	58.3
Cadmium	77.2	12.3	100.0	29.8
Copper	100.0	14.9	100.0	29.2
Lead	89.8	21.5	100.0	45.8
Mercury	62.2	7.0	66.0	21.3
Nickel	100.0	0.0	100.0	2.1
Silver	52.1	16.4	86.4	36.4
Zinc	100.0	22.7	100.0	52.1
Low Molecular Weight PAHs in ppb				
2-Methylnaphthalene	46.2	1.3	36.4	4.5
Acenaphthene	48.5	2.4	63.8	23.4
Acenaphthylene	24.8	0.0	17.0	0.0
Anthracene	66.7	0.6	87.2	17.0
Fluorene	54.2	1.2	63.8	19.1
Phenanthrene	83.0	3.0	95.7	36.2
Naphthalene	66.1	0.0	53.2	0.0
Total LPAHs	NA	1.4	NA	23.4
High Molecular Weight PAHs in ppb				
Benzo(g,h,i)Perylene	62.5	2.5	87.2	27.7
Benzo(a)Anthracene	76.4	1.9	100.0	37.0
Benzo(a)Pyrene	79.2	2.5	100.0	31.9
Chrysene	79.5	2.5	100.0	26.1
Dibenzo(a,h)Anthracene	33.3	2.6	61.4	34.1
Fluoranthene	82.6	2.5	100.0	43.5
Indeno(1,2,3-c,d)Pyrene	64.3	3.2	89.1	30.4
Pyrene	84.4	2.5	100.0	31.1
Total Benzofluoranthenes	82.6	1.2	100.0	32.6
Total HPAHs	NA	2.4	NA	36.2
Phthalates in ppb				
Bis(2-Ethylhexyl) Phthalate	62.7	3.1	61.7	25.5
Semivolatiles in ppb				
Dibenzofuran	50.0	0.6	68.2	18.2
Pesticides/PCBs in ppb				
Total PCBs	62.0	4.7	63.8	8.5

JOBS\520308\TBL-4-1.WK1

Table 4-2 - Sample Size Estimation for Phase 1 Area

Lowermost Core Sample Location	Antimony (1) in mg/kg	Transform (2)	Arsenic (1) in mg/kg	Transform (2)	Cadmium (1) in mg/kg	Transform (2)	Copper (1) in mg/kg	Transform (2)	Lead (1) in mg/kg	Transform (2)
R1-A1	1.40	0.380	0.76	0.246	0.37	0.137	7.00	0.903	1.20	0.342
R1-B3	1.60	0.415	0.94	0.288	1.20	0.342	7.60	0.934	1.70	0.431
R1-B7	1.40	0.380	1.10	0.322	0.58	0.199	9.50	1.021	1.70	0.431
R1-B6	1.60	0.415	1.20	0.342	1.20	0.342	7.50	0.929	1.20	0.342
R1-2	1.70	0.431	1.30	0.362	0.78	0.250	12.30	1.124	2.10	0.491
R1-C5	1.90	0.462	1.30	0.362	0.57	0.196	8.90	0.996	1.40	0.380
R1-B2	1.70	0.431	1.40	0.380	1.50	0.398	15.40	1.215	2.50	0.544
R1-A3	1.40	0.380	1.40	0.380	0.59	0.201	10.10	1.045	1.80	0.447
R1-C1	1.70	0.431	1.50	0.398	0.52	0.182	9.30	1.013	2.20	0.505
R1-B1	1.40	0.380	1.70	0.431	0.74	0.241	8.90	0.996	9.90	1.037
R1-C4	1.40	0.380	1.80	0.447	0.51	0.179	8.90	0.996	3.10	0.613
R1-A5	1.90	0.462	1.80	0.447	0.92	0.283	11.00	1.079	3.80	0.681
R1-C3	1.90	0.462	2.00	0.477	0.44	0.158	14.60	1.193	2.70	0.568
R1-C2	1.70	0.431	2.00	0.477	0.60	0.204	14.80	1.199	2.00	0.477
R1-1	1.70	0.431	2.00	0.477	0.56	0.193	12.70	1.137	2.00	0.477
R1-A2	1.60	0.415	2.10	0.491	0.44	0.158	8.40	0.973	4.40	0.732
R1-A4	1.70	0.431	2.20	0.505	0.94	0.288	14.20	1.182	6.30	0.863
R1-B4	1.30	0.362	3.50	0.653	0.66	0.220	8.00	0.954	1.50	0.398
R1-B5	1.50	0.398	3.60	0.663	0.85	0.267	17.00	1.255	2.50	0.544
R1-A6	1.80	0.447	4.10	0.708	1.40	0.380	28.50	1.470	19.30	1.307
Data Set Statistics										
N=	20	20	20	20	20	20	20	20	20	20
Mean	1.615	0.416	1.885	0.443	0.769	0.241	11.730	1.081	3.665	0.581
Sample Stardard Deviation	0.187	0.031	0.896	0.122	0.329	0.076	4.963	0.141	4.218	0.245
Maximum Concentration	1.90	0.46	4.10	0.71	1.50	0.40	28.50	1.47	19.30	1.31
Minimum Concentration	1.30	0.36	0.76	0.25	0.37	0.14	7.00	0.90	1.20	0.34
Sample Variance	0.035	0.001	0.802	0.015	0.108	0.006	24.627	0.020	17.795	0.060
Sediment Quality Objective in mg/kg	150	2.179	57	1.763	5.1	0.785	390	2.592	450	2.654
Estimation of Sample Size										
d = 0.15 (3)		0.15		0.15		0.15		0.15		0.15
Z(0.975,19) (4)		1.96		1.96		1.96		1.96		1.96
Estimated Number of Samples		3		12		8		14		25

JOBS\320308\TABLE4-2.WK1

Lowermost Core Sample Location	Mercury (1) in mg/kg	Transform (2)	Nickel (1) in mg/kg	Transform (2)	Silver (1) in mg/kg	Transform (2)	Zinc (1) in mg/kg	Transform (2)
R1-A1	0.10	0.041	8.00	0.954	0.82	0.260	19.80	1.318
R1-B3	0.11	0.045	7.80	0.944	0.25	0.097	22.40	1.369
R1-B7	0.10	0.041	8.90	0.996	0.82	0.260	21.50	1.352
R1-B6	0.11	0.045	8.60	0.982	0.25	0.097	23.20	1.384
R1-2	0.18	0.072	8.10	0.959	0.28	0.107	22.00	1.362
R1-C5	0.13	0.053	7.50	0.929	0.30	0.114	21.10	1.344
R1-B2	0.12	0.049	9.00	1.000	0.27	0.104	25.50	1.423
R1-A3	0.11	0.045	7.90	0.949	0.85	0.267	20.60	1.334
R1-C1	0.12	0.049	8.60	0.982	0.26	0.100	22.80	1.377
R1-B1	0.12	0.049	8.10	0.959	0.85	0.267	21.30	1.348
R1-C4	0.10	0.041	7.40	0.924	0.83	0.262	19.80	1.318
R1-A5	0.12	0.049	7.70	0.940	0.30	0.114	23.00	1.380
R1-C3	0.13	0.053	8.80	0.991	0.30	0.114	26.30	1.436
R1-C2	0.12	0.049	9.50	1.021	0.27	0.104	25.90	1.430
R1-1	0.12	0.049	8.60	0.982	0.27	0.104	26.70	1.442
R1-A2	0.11	0.045	7.70	0.940	0.95	0.290	18.90	1.299
R1-A4	0.12	0.049	8.50	0.978	0.28	0.107	26.30	1.436
R1-B4	0.12	0.049	7.30	0.919	0.80	0.255	17.50	1.267
R1-B5	0.11	0.045	10.70	1.068	0.93	0.286	28.60	1.471
R1-A6	0.13	0.053	9.90	1.037	0.29	0.111	41.80	1.631
Data Set Statistics								
N=	20	20	20	20	20	20	20	20
Mean	0.119	0.049	8.430	0.973	0.509	0.171	23.750	1.386
Sample Stardard Deviation	0.017	0.007	0.876	0.039	0.294	0.082	5.167	0.079
Maximum Concentration	0.18	0.07	10.70	1.07	0.95	0.29	41.80	1.63
Minimum Concentration	0.10	0.04	7.30	0.92	0.25	0.10	17.50	1.27
Sample Variance	0.000	0.000	0.767	0.002	0.086	0.007	26.693	0.006
Sediment Quality Objective in mg/kg	0.59		140	2.149	6.1	0.851	410	2.614
Estimation of Sample Size								
d = 0.15 (3)		0.15		0.15		0.15		0.15
Z(0.975,19) (4)		1.96		1.96		1.96		1.96
Estimated Number of Samples		1		4		8		8

Notes:

1 Metal Concentration of lowest section of Phase 1 area core sampled in Data Report (Port, 1992a).
2 Log-normal data transformed by Y=Log(X+1) (Steel and Torrie, 1960)
3 15 Percent Relative Error between estimated mean and true mean (u).
4 Z Statistic for Alpha= 0.05 (Gilbert, 1987)

Table 4-3 - Pre-Determined Phase 1 and Phase 2 Sediment Quality Sampling Locations

Sample Identification	Northing	Easting
RD-A1	711270	1524904
RD-A2	711121	1525077
RD-A3	710937	1525255
RD-A4	710776	1525414
RD-A5	711074	1524887
RD-A6	710811	1525049
RD-A7	710625	1525137
RD-A8	710485	1525265
RD-B1	711888	1524319
RD-B2	711742	1524522
RD-B3	711566	1524684
RD-B4	711352	1524774
RD-B5	711810	1524314
RD-B6	711636	1524466
RD-B7	711427	1524579
RD-B8	711192	1524634
RD-C1	712592	1523729
RD-C2	712458	1523895
RD-C3	712216	1524021
RD-C4	712298	1524137
RD-C5	712426	1523435
RD-C6	712355	1523716
RD-C7	712092	1523738
RD-C8	711962	1523980
RD-D1	710872	1524734
RD-D2	711253	1524410
RD-D3	711633	1524086
RD-D4	712555	1524153
RD-D5	712175	1524477
RD-D6	711794	1524802
RD-D7	711414	1525126
RD-D8	711033	1525450
RD-D9	710658	1525658
RD-D10	710308	1525301

Note: These are target locations. Actual field locations will vary.

320308\OMMP.fr

Table 4-4 - Methods of Analysis and Detection Limits - Sitcum Waterway Sediment Sheet 1 of 2

Analyte	CLP CRQL	Laucks MDL(7)	Test Methods Sediments Reference	Method	
CONVENTIONALS & MISC.					
Total Solids	NA	1 %	SM	2540 G	
Total Organic Carbon	NA	0.1 %	PSEP	Modified	
METALS in mg/kg (ppm)					
Antimony	12	1	PSEP	Page 18, Metals	(1)
Arsenic	2	1	SW 846	7061	(1)
Mercury	0.1	0.1	CLP	SOW 3/90	
Silver	2	1	CLP	SOW 3/90	(1)
Copper	5	2.5	CLP	SOW 3/90	(1)
Nickel	8	4	CLP	SOW 3/90	(1)
Cadmium	1	1	CLP	SOW 3/90	(1)
Lead	0.6	0.6	CLP	SOW 3/90	(1)
Zinc	4	2	CLP	SOW 3/90	(1)
LPAHs in µg/kg (ppb)					
Naphthalene	330	33	CLP	SOW 3/90	(2)
2-Methylnaphthalene	330	33	CLP	SOW 3/90	(2)
Acenaphthylene	330	33	CLP	SOW 3/90	(2)
Acenaphthene	330	33	CLP	SOW 3/90	(2)
Fluorene	330	33	CLP	SOW 3/90	(2)
Phenanthrene	330	33	CLP	SOW 3/90	(2)
Anthracene	330	33	CLP	SOW 3/90	(2)
HPAHs in µg/kg (ppb)					
Fluoranthene	330	33	CLP	SOW 3/90	(2)
Pyrene	330	33	CLP	SOW 3/90	(2)
Benzo(a)anthracene	330	33	CLP	SOW 3/90	(2)
Chrysene	330	33	CLP	SOW 3/90	(2)
Benzo(b)fluoranthene	330	33	CLP	SOW 3/90	(2)
Benzo(k)fluoranthene	330	33	CLP	SOW 3/90	(2)
Benzo(a)pyrene	330	33	CLP	SOW 3/90	(2)
Indeno(1,2,3-cd)pyrene	330	33	CLP	SOW 3/90	(2)
Dibenzo(a,h)anthracene	330	33	CLP	SOW 3/90	(2)
Benzo(g,h,i)perylene	330	33	CLP	SOW 3/90	(2)
PHTHALATE ESTERS in µg/kg (ppb)					
Bis(2-ethylhexyl)phthalate	330	33	CLP	SOW 3/90	(2)

Table 4-4 - Methods of Analysis and Detection Limits - Sitcum Waterway Sediment

Analyte	CLP CRQL	Laucks MDL(7)	Test Methods Sediments		
			Reference	Method	
MISC. OXY. COMPOUNDS in µg/kg (ppb)					
Dibenzofuran	330	33	CLP	SOW 3/90	(2)
PESTICIDES/PCBs in µg/kg (ppb)					
Total PCBs	NA	20			(5,6)

Notes:

(1) CLP digestion is 1gm/200 ml. Our digestion would be 1 gm/100 ml.
(2) Values are reported as long as spectral confirmation can be made. This means that there will be no laboratory J-flagged values; however, J flags may be assigned during data validation. The J qualifier in CLP data means the analyte was detected above the lab MDL but below the CRQL.
(3) Determined in the ABNs analysis for Sitcum samples.
(4) Determined in the pesticide fraction.
(5) Total values are calculated by summing concentrations above detection limits. Concentrations not detected at the detection limit value will not be included.
(6) Modified as necessary for the limited target analyte list and including any or all of the following cleanups: florisil cleanup; SW 846 Method 3620; sulfite sulfur cleanup; or elemental mercury clenaup for sulfur.
(7) Dry weight basis.

SM	Standard Methods, 18th Edition
CLP	Contract Laboratory Program
MCAWW	Methods for the Chemical Analysis of Water and Waste
CRQL	Contract Required Quantitation Limit
Laucks	Laucks Testing Laboratories, Inc.
MDL	Method Detection Limit
PSEP	Puget Sound Estuary Program

Actual Sample Detection Limits may vary from Method Detection Limits depending on the influences of limited sample volume, matrix interferences, blank contamination, and moisture content of sediments.

JOBS\320308\TAB4-4.wk1

Table 4-5 - Pre-Determined Habitat/Mitigation Sediment Quality Sampling Locations

Sample Identification	Northing	Easting
H-1	712603	1522658
H-2	712390	1522801
H-3	712221	1522907
H-4	712123	1522650
H-5	711831	1522833
H-6	711743	1522899

Note: These are target locations. Actual field locations will vary.

320308\OMMP.fr

Table 4-6 - Methods of Analysis and Detection Limit Goals - Habitat/Mitigation Sediment

Analyte	CLP CRQL	Laucks MDL(7)	Test Methods Sediments Reference	Method	
CONVENTIONALS & MISC.					
Total Solids	NA	1 %	SM	2540 G	
Total Vol Solids	NA	1 %	SM	2540 E	
Total Organic Carbon	NA	0.1 %	SW 846	9060 with I.R.	
Ammonia (on DIW leachate)	NA	50 ppm	MCAWW	350	
Cyanide	2	1 ppm	CLP	SOW 3/90	
pH	NA	NA	SW 846	9045	
Sulfide	NA		PSEP	NA	
METALS in mg/kg (ppm)					
Antimony	12	1	PSEP	Page 18, Metals	(1)
Arsenic	2	1	SW 846	7061	(1)
Mercury	0.1	0.1	CLP	SOW 3/90	
Silver	2	1	CLP	SOW 3/90	(1)
Copper	5	2.5	CLP	SOW 3/90	(1)
Nickel	8	4	CLP	SOW 3/90	(1)
Cadmium	1	1	CLP	SOW 3/90	(1)
Lead	0.6	0.6	CLP	SOW 3/90	(1)
Zinc	4	2	CLP	SOW 3/90	(1)
PHENOLS & SUB PHENOLS in µg/kg (ppb)					
Phenol	330	33	CLP	SOW 3/90	(2)
2-Methylphenol	330	33	CLP	SOW 3/90	(2)
4-Methylphenol	330	33	CLP	SOW 3/90	(2)
2,4-Dimethylphenol	330	33	CLP	SOW 3/90	(2)
Pentachlorophenol	800	330	CLP	SOW 3/90	(2)
LPAHs in µg/kg (ppb)					
Naphthalene	330	33	CLP	SOW 3/90	(2)
2-Methylnaphthalene	330	33	CLP	SOW 3/90	(2)
Acenaphthylene	330	33	CLP	SOW 3/90	(2)
Acenaphthene	330	33	CLP	SOW 3/90	(2)
Fluorene	330	33	CLP	SOW 3/90	(2)
Phenanthrene	330	33	CLP	SOW 3/90	(2)
Anthracene	330	33	CLP	SOW 3/90	(2)

Table 4-6 - Methods of Analysis and Detection Limit Goals - Habitat/Mitigation Sediment

Analyte	CLP CRQL	Laucks MDL(7)	Test Methods Sediments		
			Reference	Method	
HPAHs in µg/kg (ppb)					
Fluoranthene	330	33	CLP	SOW 3/90	(2)
Pyrene	330	33	CLP	SOW 3/90	(2)
Benzo(a)anthracene	330	33	CLP	SOW 3/90	(2)
Chrysene	330	33	CLP	SOW 3/90	(2)
Benzo(b)fluoranthene	330	33	CLP	SOW 3/90	(2)
Benzo(k)fluoranthene	330	33	CLP	SOW 3/90	(2)
Benzo(a)pyrene	330	33	CLP	SOW 3/90	(2)
Indeno(1,2,3-cd)pyrene	330	33	CLP	SOW 3/90	(2)
Dibenzo(a,h)anthracene	330	33	CLP	SOW 3/90	(2)
Benzo(g,h,i)perylene	330	33	CLP	SOW 3/90	(2)
CHLOR. AROMATICS in µg/kg (ppb)					
1,3-Dichlorobenzene	330	33	CLP	SOW 3/90	(2,3)
1,4-Dichlorobenzene	330	33	CLP	SOW 3/90	(2,3)
1,2-Dichlorobenzene	330	33	CLP	SOW 3/90	(2,3)
1,2,4-Trichlorobenzene	330	33	CLP	SOW 3/90	(2,3)
Hexachlorobenzene	330	0.33	CLP	SOW 3/90	(4,6)
CHLOR. ALIPHATICS in µg/kg (ppb)					
Hexachlorobutadiene	330	0.33	CLP	SOW 3/90	(4,6)
PHTHALATE ESTERS in µg/kg (ppb)					
Dimethyl phthalate	330	33	CLP	SOW 3/90	(2)
Diethyl phthalate	330	33	CLP	SOW 3/90	(2)
Di-n-butyl phthalate	330	33	CLP	SOW 3/90	(2)
Butylbenzylphthalate	330	33	CLP	SOW 3/90	(2)
Bis(2-ethylhexyl)phthalate	330	33	CLP	SOW 3/90	(2)
Di-n-octyl phthalate	330	33	CLP	SOW 3/90	(2)
MISC. OXY. COMPOUNDS in µg/kg (ppb)					
Benzyl alcohol	NA	33	CLP	SOW 3/90	(2)
Benzoic acid	NA	830	CLP	SOW 3/90	(2)
Dibenzofuran	330	33	CLP	SOW 3/90	(2)
N-nitrosodiphenylamine	330	33	CLP	SOW 3/90	(2)

Table 4-6 - Methods of Analysis and Detection Limit Goals - Habitat/Mitigation Sediment Sheet 3 of 3

Analyte	CLP CRQL	Laucks MDL(7)	Test Methods Sediments Reference	Method	
PESTICIDES/PCBs in µg/kg (ppb)					
Total PCBs	NA	20			(5,6)
4,4'-DDE	3.3	3.3	CLP	SOW 3/90	(6)
4,4'-DDD	3.3	3.3	CLP	SOW 3/90	(6)
4,4'-DDT	3.3	3.3	CLP	SOW 3/90	(6)

Notes:

(1) CLP digestion is 1gm/200 ml. Our digestion would be 1 gm/100 ml.
(2) Values are reported as long as spectral confirmation can be made. This means that there will be no laboratory J-flagged values; however, J flags may be assigned during data validation. The J qualifier in CLP data means the analyte was detected above the lab MDL but below the CRQL.
(3) Determined in the ABNs analysis for Sitcum samples.
(4) Determined in the pesticide fraction.
(5) Total values are calculated by summing concentrations above detection limits. Concentrations not detected at the detection limit value will not be included.
(6) Modified as necessary for the limited target analyte list and including any or all of the following cleanups: florisil cleanup; SW 846 Method 3620; sulfite sulfur cleanup; or elemental mercury clenaup for sulfur.
(7) Dry weight basis.

SM	Standard Methods, 18th Edition
CLP	Contract Laboratory Program
MCAWW	Methods for the Chemical Analysis of Water and Waste
CRQL	Contract Required Quantitation Limit
Laucks	Laucks Testing Laboratories, Inc.
MDL	Method Detection Limit
PSEP	Puget Sound Estuary Program

Actual Sample Detection Limits may vary from Method Detection Limits depending on the influences of limited sample volume, matrix interferences, blank contamination, and moisture content of sediments.

JOBS\320308\TABLE4-6.WK1

Proposed Sediment Quality Monitoring Sampling Location Plan

Sitcum Waterway Remediation Project

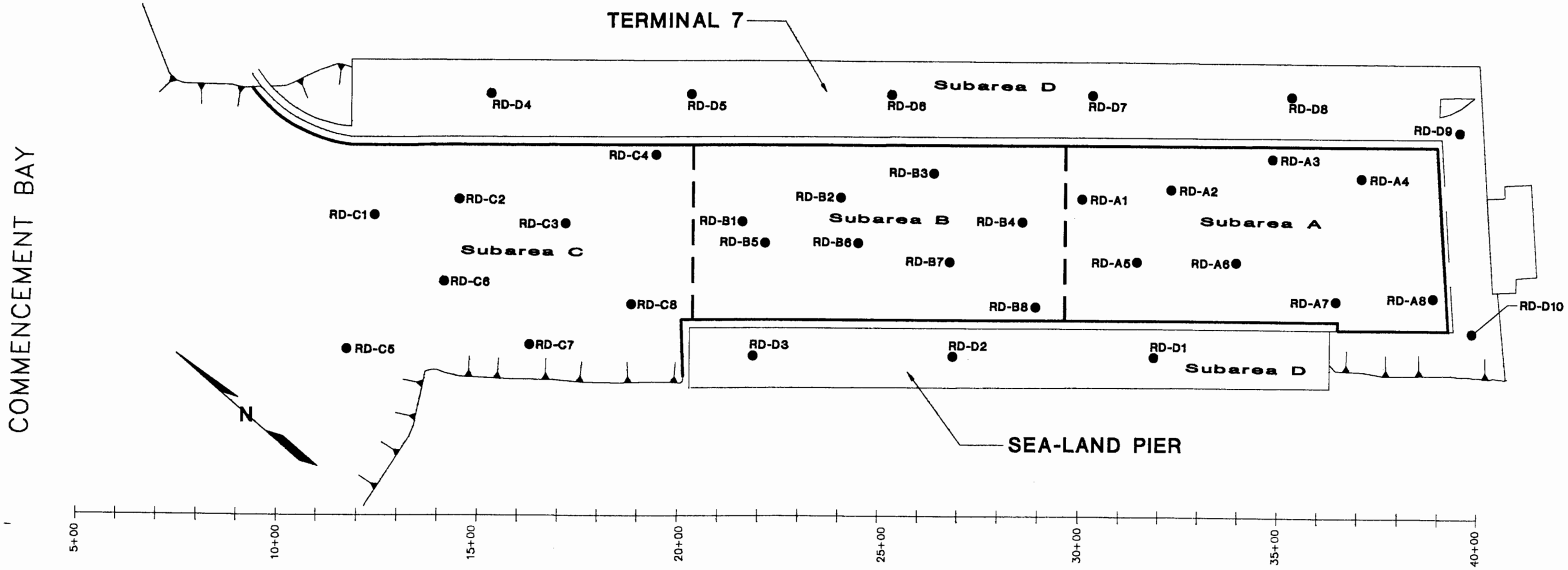

Legend

- ●RD-C4 Sediment Sample Location and Number
- Phase 1 and 2 Boundary
- Pier Face and Bulkhead Line
- Toe of Riprap Slope
- Top of Bank
- Subarea Boundaries

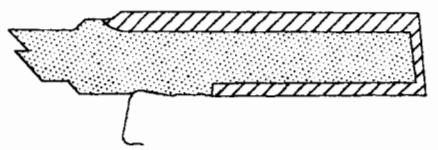

- Phase 1 Sampling Area
- Phase 2 Sampling Area

0 250 500

Scale in Feet

HARTCROWSER

J-3203-08 4/93

Figure 4-1

J-3203-08 10 EJC /94 1=250

Milwaukee Waterway Habitat/Mitigation Area Sediment Sampling Location Plan

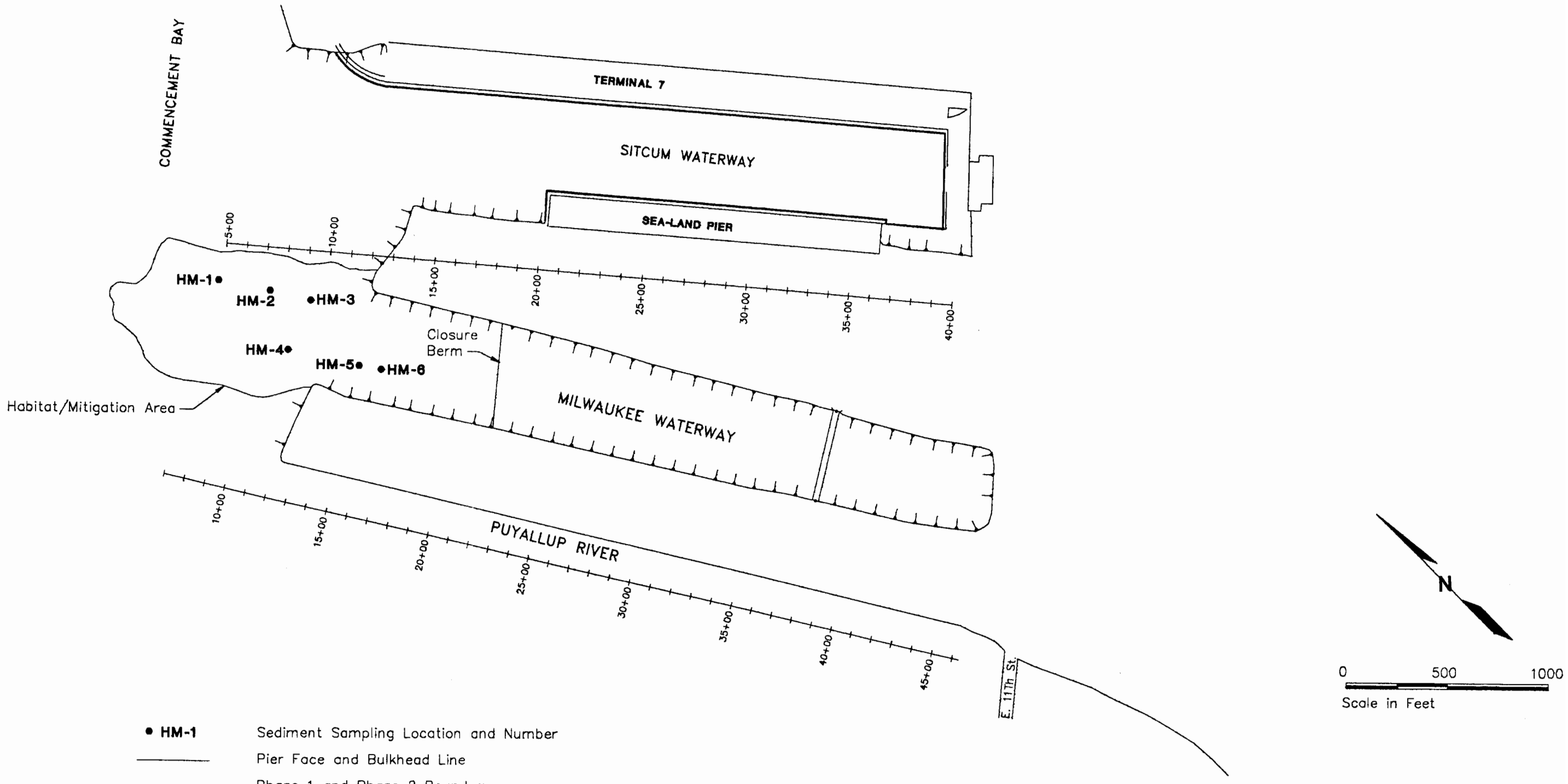

Base map prepared from AutoCAD drawing by ABAM Engineers, Inc. dated November, 1991.

HARTCROWSER
J-3203-08 4/93
Figure 4-3

32030808 EJC /93

Port of Tacoma
April 6, 1994

ATTACHMENT 4-1
TECHNICAL MEMORANDUM DATED MARCH 28, 1994
SITCUM WATERWAY REMEDIATION PROJECT
J-3203-17

HARTCROWSER

Earth and Environmental Technologies

Hart Crowser, Inc.
1910 Fairview Avenue East
Seattle, Washington 98102
FAX 206.328.5581
206.324.9530

TECHNICAL MEMORANDUM

DATE: March 28, 1994

TO: Richard Gilmur, Port of Tacoma

FROM: David W. Templeton and Philip Spadaro, Hart Crowser

RE: Sitcum Waterway Remediation Project
Remaining Natural Recovery Issues
J-3203-17

The Operations, Maintenance, and Monitoring Plan (OMMP) describes the decision framework process for evaluating the effectiveness of sediment removal in the Phase 1 and Phase 2 areas of the Sitcum Waterway. In the event that the evaluation of post-construction sediment quality indicates that relatively small portions of the Phase 1 and/or Phase 2 area exceed sediment quality objectives (SQOs), the Port recommendation(s) to EPA may include the identification of additional response actions (ARAs), as defined in the Consent Decree. Natural recovery will only be appropriate as an ARA for those sediments that are below the sediment remedial action levels (SRALs). Consequently, to evaluate natural recovery as an ARA, it is necessary to recalculate SRALs to reflect post-construction sediment conditions. This letter addresses the three remaining issues identified in EPA's January 13, 1994, letter, regarding natural recovery modeling and monitoring in the Sitcum Waterway:

- Natural Recovery Modeling Input Parameters;
- Recalculation of SRALs; and
- Natural Recovery Monitoring.

Natural Recovery Modeling Input Parameters

The Officer and Lynch (1989) model was applied to the Sitcum Waterway to estimate the physical residence time of sediments within the upper mixed layer of the Phase 1 and Phase 2 areas (Evaluation Report; Port, 1992). Based on this analysis, half of the sediments initially residing at the average depth within the mixed layer of the Phase 1 area are transported (either to deeper zones or to offshore areas of Commencement Bay) over a period of approximately 12 years (half-life). Even though the Phase 2 areas have significantly higher net sedimentation rates (4.1 ± 0.9 gm/cm^2-yr versus 0.6 ± 0.3 gm/cm^2-yr), the Officer and Lynch model was applied to Phase 2 area sediments based on the highest Phase 1 area net sedimentation rate (0.9 g/cm^2-yr) and negligible resuspension. The computed physical half-life of surface sediments in these areas, based on this environmentally conservative assumption, is 11 years. As agreed to in EPA's January 13, 1994, letter, these physical residence times (half-lives) will be retained for the recalculation of SRALs presented in the following section.

Sediment Remediation Action Levels (SRALs)

Overall recovery of the Sitcum Waterway, in terms of SRALs, is a function of two processes: physical processes (surface sediment residence times) and suspended particulate material inputs. Biodegradation, though significant for many organics, is not considered in this recalculation of SRALs; however, biodegradation may be considered if organics are determined to be important to the overall recovery of the waterway.

Modified SRALs

The Evaluation Report presented modified SRALs for indicator chemicals prior to remedial actions (Table 1). The calculation of these modified SRALs was based on the following reasoning. Phase 1 areas, where localized resuspension is a significant source or input of suspended material, were modeled as receiving 80 percent of input material from suspended material and 20 percent from average sediment trap material. The mass balance of material within the waterway is retained. As the physical residence time reduces the mixed layer concentration, the resuspended fraction (80 percent) will exhibit a similar trend. Note that the initial sediment concentration was the average of all surface sediment SQO exceedences, including historical data since 1986. Due to the extreme variability of surface sediment concentrations found in the Sitcum Waterway, this assumption was environmentally conservative. Alternatively, Phase 2 areas, where localized resuspension in not a significant source of input of suspended material, were modeled as receiving 100 percent of current input material from sediment trap material.

This was reasonable, since the sediment trap material is a composite of suspended Phase 1 area surface sediment and other sources. Essentially, the Phase 1 area sediments are the input source to the Phase 2 area.

Recalculation of SRALs

SRALs will be recalculated for those indictor chemicals identified in Section 4.0 of the OMMP above SQOs that will be considered for natural recovery. The method by which SRALs will be recalculated for indicator chemical(s) after sediment removal is based on similar reasoning, as discussed in the previous section. The sediment concentration after ten years is the sum of source reduction in the sediment mixed layer due to physical processes and source input by suspended material. This method is presented in Table 2 and described in the following sections.

- **Concentration for Proposed Natural Recovery Area** is the maximum concentration of the indicator chemical(s) based on post-construction sediment quality monitoring; however, the actual concentration agreed to by the Port and EPA will consider the spatial variability of indicator chemical(s) concentrations. As with the development of modified SRALs, indicator chemical(s) are those problem chemical(s) selected to evaluate natural recovery.

- **Enrichment Ratio (E-Ratio) for Proposed Natural Recovery Area** is the ratio of the maximum concentration of the indicator chemical(s) to the SQO:

$$E\text{-}Ratio = \frac{C_{NRArea}}{SQO} \qquad \text{(Equation 1)}$$

where:

E-Ratio	=	Enrichment Ratio
SQO	=	Sediment Quality Objective
C_{NRArea}	=	Concentration of Indicator Chemical(s) within Proposed Natural Recovery Area

- **Source Reduction in Sediment Mixed Layer over Ten Years (Physical)** is based on physical residence time (half life) where:

$$C_{10Physical} = C_{Phase\ 1\ Area} * e^{-kt} \qquad \text{(Equation 2)}$$

where:

$C_{10Physical}$ = Source Reduction within the Proposed Natural Recovery Area Mixed Layer over 10 Years Due to Physical Processes
$C_{Phase\ 1\ Area}$ = Average Phase 1 Area Concentration of Indicator Chemical(s)
t = 10 years
k_{Phase1} = 0.059743 (Half-life = 12 years)
k_{Phase2} = 0.0643 (Half-life = 11 years)

- **Source Input by Suspended Materials to Phase 1** natural recovery areas, where localized resuspension is the significant source of suspended material, is modeled as receiving input material from suspended material comprised of the average Phase 1 area chemical concentration (N=24) determined during the evaluation of post-construction sediment quality. The average chemical concentration is appropriate due to the variability of surface sediments that are resuspended and transported to the proposed natural recovery area.

$$Source\ Input\ by\ Suspended\ Materials = \left(1 - \frac{C_{10Physical}}{C_{NRArea}}\right) C_{Phase\ 1\ Area} \qquad \text{Equation 3}$$

- **Source Input by Suspended Materials to Phase 2** natural recovery areas, where localized resuspension in not a significant source or input of suspended material, are comprised entirely of average Phase 1 area concentrations (N=24).

$$Source\ Input\ by\ Suspended\ Materials = \left(1 - \frac{C_{10Physical}}{C_{NRArea}}\right) C_{Phase\ 1\ Area} \qquad \text{Equation 3}$$

- **Ten-Year Concentration** is the sum of **Source Reduction in Sediment Mixed Layer over Ten Years** and **Source Input by Suspended Material**:

Ten-Year Concentration = *Source Reductions in Sediment Mixed Layer over Ten Years Physical (Equation 2) + Source Input by Suspended Material over Ten Years (Equation 3)* Equation 4

- **Sediment Remedial Action Levels (SRALs) for Indicator Chemical after Sediment Removal** are then calculated as:

$$SRAL = (C_{NRArea} / Ten\text{-}Year\ Concentration)\ SQO \qquad \text{Equation 5}$$

where:

SRAL	=	Sediment Remedial Action Levels for Indicator Chemical(s) after Sediment Removal
Ten-Year Concentration	=	Source Reductions in Sediment Mixed Layer over Ten Years (Physical) + Source Input by Suspended Material

This method for recalculating SRALs is designed specifically for relatively small portions of the Phase 1 area and/or the Phase 2 area and will be implemented, as may be necessary, as part of the post-construction sediment quality evaluation process identified in Section 4.0 of the OMMP.

Natural Recovery Monitoring

As part of the post-construction evaluation of sediment quality, should it be determined that natural recovery is to be considered as part of an ARA, then natural recovery monitoring will be evaluated and determined as part of that ARA. This will enable the actual post-construction condition to be considered as part of the specific ARA.

We believe that this memo should resolve EPA's outstanding issues regarding natural recovery. When sediment quality data are available, we will use the approach described in this memo to calculate SRALs for the Sitcum Waterway.

DWT:cen/tml
NATLRCVR.M1

Attachments:

Table 1 - Calculation of Modified SRALs for Indicator Chemicals Prior to Remedial Action
Table 2 - Recalculation of SRALs for Indicator Chemicals after Sediment Removal
Table 3 - Equations

Table 1 – Calculation of Modified SRALs for Indicator Chemicals Prior to Remedial Action

Phase	Constituent Name	SQO(a)	Average of Surface Sediment SQO Exceedences (a)(e)	Average E-Ratio (b)(e)	Factors Effecting Natural Recovery			Modified SRAL
					Source Reduction in Sediment Mixed Layer over 10 Years (a)(c)	Source Input by Suspended Materials (a)(d)	10-Year Concentration (a)	
1	Arsenic	57	200	3.51	110	42	152	75
2	Arsenic	57	181	3.18	95	12	108	96
1	Copper	390	579	1.48	319	126	445	508
2	Copper	390	579	1.48	304	62	366	617
1	Dibenzofuran	540	1,690	3.13	930	360	1,290	708
2	Dibenzofuran	540	1,550	2.87	815	133	948	883
1	Total HPAH	17,000	21,000	1.24	11,555	4,778	16,333	21,858
2	Total HPAH	17,000	78,830	4.64	41,442	3,273	44,715	29,970
2	Total LPAH	5,200	5,500	1.06	2,891	1,043	3,935	7,268
1	Total LPAH	17,000	15,535	0.91	8,548	3,274	11,821	22,341
1	Lead	450	2,248	5.00	1,237	469	1,706	593
2	Lead	450	1,527	3.39	803	128	931	738
1	Zinc	410	750	1.83	413	194	607	507
2	Zinc	410	1,159	2.83	609	242	851	558

NOTES:

(a) Concentrations, expressed as ug/kg dry weight for organics and mg/kg dry weight for metals.

(b) Enrichment ratio (i.e., observed concentration/SQO) in surface sediment.

(c) Decrease of concentration based on advection process (Officer and Lynch Model). Based on half life of 12 years for Phase 1 areas. Based on half life of 11 years for Phase 2 areas.

(d) Suspended material inputs based on Ecology Sediment Trap data (1990–1991), where:
Phase 1 area sediment lost by advection processes (c) is assumed to be replaced by an equal fraction of sediment comprised of 80% resuspended matter and 20% trap inputs and Phase 2 area sediments assumed to be replaced by 100% trap inputs:

	N	Average Concentration (a)	Concentration Range
Arsenic	10	26	6 to 57
Copper	10	130	66 to 190
Lead	10	270	52 to 370
Zinc	10	510	100 to 580
HPAH	7	6,900	880 to 21,000
LPAH	7	2,200	320 to 8,600
Dibenzofuran	7	280	30 to 1,000

(e) Concentrations are designed to be environmentally conservative and represent the average of all surface (0–2 cm and 0–4 cm) sediment SQO exceedences measured since 1986.

JOBS\320317\Table1.wk1

Hart Crowser
J-3203-17

Table 2 – Recalculation of SRALs for Indicator Chemicals after Sediment Removal

Phase	Constituent Name	SQO(a)	Concentration for Proposed NR Area (a)	E-Ratio for Proposed NR Area (b)	Factors Effecting Natural Recovery			SRAL
					Source Reduction in Sediment Mixed Layer over 10 Years (a)(c)	Source Input by Suspended Materials (a)(d)	Ten-Year Concentration (a)	
1	Arsenic	57	Determined during	Equation 1	Equation 2	Equation 3	Equation 4	Equation 5
1	Copper	390	Evaluation of	"	"	"	"	"
1	Dibenzofuran	540	Post-Construction	"	"	"	"	"
1	Lead	450	Sediment Quality	"	"	"	"	"
1	Total HPAH	17,000	"	"	"	"	"	"
1	Total LPAH	17,000	"	"	"	"	"	"
1	Total PCBs		"	"	"	"	"	"
1	Zinc	410	"	"	"	"	"	"
2	Arsenic	57	"	"	"	"	"	"
2	Copper	390	"	"	"	"	"	"
2	Dibenzofuran	540	"	"	"	"	"	"
2	Lead	450	"	"	"	"	"	"
2	Total HPAH	17,000	"	"	"	"	"	"
2	Total LPAH	5,200	"	"	"	"	"	"
2	Total PCBs		"	"	"	"	"	"
2	Zinc	410	"	"	"	"	"	"

NOTES:

(a) Concentrations, expressed as ug/kg dry weight for organics and mg/kg dry weight for metals.

(b) Enrichment ratio (i.e., concentration within proposed NR area/SQO) in surface sediment.

(c) Decrease of concentration based on advection process (Officer and Lynch Model). Based on half life of 12 years for Phase 1 areas. Based on half life of 11 years for Phase 2 areas.

(d) Suspended material inputs based on average concentrations from the Phase 1 area after sediment removal, where:
Phase 1 area sediment lost by advection processes (c) is assumed to be replaced by an equal fraction of sediment comprised of resuspended matter from the Phase 1 area.
Phase 2 area sediments assumed to be replaced by 100% Phase 1 area suspend material input:

Table 3 - Equations

Equation 1: $$E\text{-}Ratio = \frac{C_{NRArea}}{SQO}$$

Equation 2: $$C_{10Physical} = C_{Phase\ 1\ Area} * e^{-kt}$$

Equation 3: $$Source\ Input\ by\ Suspended\ Materials = \left(1 - \frac{C_{10Physical}}{C_{NRArea}}\right) C_{Phase\ I\ Area}$$

Equation 4:

Ten-Year Concentration = Source Reductions in Sediment Mixed Layer over Ten Years Physical (Equation 2) + Source Input by Suspended Material over Ten Years (Equation 3)

Equation 5: $$SRAL = (C_{NRArea} / Ten\text{-}Year\ Concentration)\ SQO$$

SECTION 5.0
HABITAT/MITIGATION MONITORING

5.0 HABITAT/MITIGATION MONITORING

5.1 Overview

This section addresses the physical and biological aspects of monitoring the habitat/mitigation area at and beyond the mouth of the Milwaukee Waterway relative to mitigation goals and functional objectives.

The intent of the monitoring program is to:

1. Ensure that the mitigation goals and functional objectives are being met.

2. Collect information on parameters that when examined alone or with other data can be used to measure and assess the function of the habitat.

3. Measure habitat characteristics that influence fish and wildlife utilization and fitness.

It should be noted that the Construction Quality Assurance Plan (CQAP) specifies that the Port will perform sampling and analysis of the surface of the Blair Waterway sediments placed in the habitat/mitigation fill at and beyond the mouth of Milwaukee Waterway before placement of the clean imported materials which will provide the select surface substrate. The purpose of this sampling and analysis is to ensure that these materials are of the anticipated quality. Also, these samples will provide a baseline for comparison with future sediment chemistry data collected pursuant to the OMMP. The specifics of the sampling and analysis are set forth in sections 4.9 and 4.10 of the OMMP.

5.2 Baseline Monitoring

Milwaukee Waterway was sampled during the spring of 1988 (Jones & Stokes, Inc., 1989). This effort included quantitative sampling of the abundance of epibenthic prey and qualitative evaluation of the presence of juvenile salmonids. This information was used in evaluation of habitat impacts and mitigation design.

5.3 Post-Construction Habitat/Mitigation Monitoring

The monitoring program includes measurement of physical and biological parameters. Specifically, the Port will collect relevant information, data, and samples to determine if the mitigation habitat is replacing lost functions for the species of concern. The physical and biological components of the monitoring activities at and beyond the mouth of Milwaukee Waterway are summarized in Tables 5-1 and 5-2, respectively.

Monitoring will be conducted over a 10-year period unless terminated by earlier consensus of EPA and the Port (Table 5-3). At the end of the 10-year period, EPA and the Port will evaluate the need for additional monitoring, as a contingency action, based on analysis of previous sampling data. Physical monitoring will commence after construction once the new habitats are completed to evaluate the constructed acreages and elevations for each habitat zone. Biological sampling will begin later to allow colonization by biota.

The Port will submit a report to EPA each year that monitoring activities occur. The report will cover all activities that occurred during the calendar year and will be submitted two months after completion of the last sampling activities.

Monitoring effort will not be uniform over the 10-year period; rather, specific parameters will be measured in specified years (Table 5-3). Appendix C provides detailed descriptions of monitoring activities and analytical methods.

5.3.1 Performance Standards

Performance standards provide a clear means of evaluating the success of a mitigation effort. The performance standards for a mitigation project should reflect the goals and functional objectives of the planning effort. The goals for the mitigation actions are to:

- Provide a saltmarsh.
- Provide habitat characteristics that yield an increase in habitat function relative to existing habitats (provide high quality habitat).

- Provide habitat available to juvenile salmonids throughout the tidal cycle.

- Provide a range of habitat types to compensate for habitat losses for species of concern and indirectly benefit other species with similar or overlapping habitat requirements.

Functional objectives and performance standards for the mitigation site are listed in Tables 5-4 and 5-5.

For the benthic and epibenthic data, testing against performance standards will be conducted either based on location-by-location comparisons, or pooled data, or on a combination of both. The actual number of tests that will be conducted for a single parameter will be determined by the appropriateness of pooling replicates across locations. Therefore, the results of the tests against performance standards could yield as many as eight individual results (if eight locations are tested independently) or one result (if all data can be pooled) for a specific habitat and test parameter. This could yield a situation where some comparisons indicate passage of the performance standards and some indicate failure for a single parameter. If multiple comparisons are conducted, passage of the performance standard will be indicated for the parameter if at least 75% of the replicates are represented in the tests that pass the standard.

The performance standards for epibenthic plankters and benthic infauna contain multiple endpoints that involve different performance standards. The overall performance standard for each of these attributes will be considered to be met if the performance standards that are listed as first-tier standards (Table 5-5) are met, and if one-half or more of the other, or second-tier, performance standards (Table 5-5) are met. If during analysis of epibenthic data an individual performance standards is determined to be inappropriate for statistical testing, then it will not be counted towards these requirements. The statistical issues will be described in the annual report with respect to use or non-use of the performance standards.

All other performance standards listed in Tables 5-4 and 5-5 must be met for the project to be considered a success.

5.3.2 Reference Locations

Benthic infauna and epibenthic plankters at the habitat/mitigation site in the sandflat/mudflat habitat and the gravel/cobble habitat will be compared to reference areas. In addition, other parameters will be tested against performance standards based on reference area comparisons (Tables 5-2 and 5-5). Proposed reference areas will be presented to EPA for approval, along with appropriate supporting rationale at least six months before sampling is to occur.

Reference locations are chosen for two reasons. The first is to provide indications of overall basinwide or baywide changes in the fauna. Numerous baywide or basinwide changes have been documented in Puget Sound in the last twenty years, and the occurrence of such changes should be considered in the analyses of the mitigation areas. Second, reference areas are often used as a benchmark to assess normality of a study area. The study locations and the reference locations are statistically compared, and the results of those comparisons are used in assessing whether or not the study area is "normal".

It should be recognized that it may be difficult or impossible to find true reference locations that are adequate to use for comparison to the mitigation locations. This concern will not preclude use of the reference sites in statistical comparisons, but it must temper the conclusions that are drawn from comparison between mitigation and reference locations.

Reference locations need to be chosen on the basis of sediment and hydrographic parameters to reflect "normal" or unstressed environments similar to the study areas. Previous work in Commencement Bay has indicated that shallow water unconsolidated reference areas are difficult to find (Parametrix 1992a,b). This is primarily due to two factors:

- The hydrographic conditions of Commencement Bay result in a fauna that is not similar to other central Puget Sound sites. For example, numerous taxa found at Brown's Point are commonly found in the Strait of Juan de Fuca or the San Juan Islands, but are rare, uncommon, or lacking in other central Puget Sound areas.

- Effectively all of the shallow-water Commencement Bay habitats have been altered, generally to a significant degree. Virtually no areas can be found in the bay that can be considered *a priori* to be "normal" and thus suitable for providing appropriate reference locations.

The first factor precludes use of distant reference locations such as the Nisqually River delta area. The hydrographic conditions in that area are significantly different from the Puyallup River delta region, and the potential organism groups that might be found will be significantly different. The second factor suggests that no, or few, nearby sites will be useful as reference areas.

Rather than try to find a strict reference area for each of the habitats to be sampled, sampling locations will be chosen to provide "background" information about the basic trends in the abundance and composition of the benthos. The reference locations will be used to provide an indication of baywide or basinwide changes in the fauna. These reference locations will be located in shallow-water, unconsolidated sediment habitats in Commencement Bay. The difficulty of finding true reference locations has been recognized previously for Commencement Bay studies, and similar background locations are being chosen in 1993 for the St. Paul Waterway Habitat Restoration Project.

An attempt will be made to match the descriptive sediment parameters at the reference locations to those of the mitigation locations. However, the reference locations will not be chosen specifically to provide the closest possible sediment match. Rather, locations that approximate as many of the mitigation habitat locations' physical parameters as possible will be targeted. Each background location will be chosen to approximate the mean depth of the various mitigation habitats, so that although the background locations are not a precise match for any particular mitigation location, they should provide a general benchmark and general target condition.

5.3.3 Statistical Power for Analysis of Benthic Infauna and Epibenthic Plankters

Following collection of the data, the Port would test the statistical power of the data by calculating the Minimum Detectable Difference (MDD) for

location-to-location comparisons between mitigation and reference locations. Based on the results of this testing the archived samples may be analyzed to achieve the target level for the MDD. If analysis of the archived samples is not sufficient to attain the target level of statistical power, then subsequent sampling intensity may be increased to reach the target MDD. If pooling of data across locations is appropriate, this will be done prior to testing against performance standards. The approach is outlined as a flow chart in Figure 5-1.

The Port will review the MDD obtained for each year's data and agrees to sample adequate replicates at the locations in subsequent years to achieve a MDD of 50% for location-to-location comparisons between mitigation and reference locations. The Port expects that some pooling of replicate samples across locations will be appropriate and that the data set will be robust enough to allow testing against performance standards at a lower MDD. The approach incorporates the concept of pooling data between locations (if statistically warranted), which will likely decrease the MDD to well below 50% in the actual tests against performance standards. However, the target level for MDD (for the assumption that pooling of data across locations is not appropriate) remains at 50%. Therefore, if the assumption that data can be pooled across locations is valid, then tests against performance standards would be conducted at a low MDD with a high degree of discrimination.

The α for the tests will be set at 0.05 and β at 0.2. The power of the test depends on the error variance of the population being sampled, which will be estimated by the error mean square of an ANOVA comparing the given taxon across the sampled locations (Zar 1984). This value is inversely proportional to the number of samples, consequently the power of a test is related to the number of replicates and the appropriateness of pooling data. To assure consistency in the analyses, all data will be ln(x+1) transformed prior to the analyses of variance.

Power curves will be calculated using the method of Zar (1984) to calculate the MDD between means for location-to-location comparisons between mitigation and reference locations. For the benthic samples, the following values will be held constant, $k = 2$, $\nu_1 = (k-1) = 1$, $n = 8$, and $\nu_2 = k\,(n-1) = 16$. If the samples are pooled for further analyses, the power of the pooled samples will be calculated using the appropriately changed values of k, ν_1, and ν_2. A series of values for δ, the MDD, will

be used to obtain ϕ from formula 9.25 or 11.28 of Zar (1984). Equation 9.25 is appropriate for two-sample tests, while equation 11.28 is appropriate for multi-sample comparisons.

$$\phi = \sqrt{\frac{n\delta^2}{2ks^2}}$$

With the value of ϕ obtained from this formula, and using the appropriate values for v_1 and v_2 given above, a value for the power $(1-\beta)$ can be obtained by using Zar (1984). After a range of MDD values are used, a power curve will be constructed. This will be done for the total numerical abundances as well as for the abundances of the "major" taxa (annelids, arthropods, mollusks, and miscellaneous taxa), and species richness.

Power analyses will be conducted on the data to determine the MDD. With eight replicates per location it is anticipated that the MDD will be 0.5 or lower. If the power analysis indicates that the MDD is higher than 0.5, the sampling plan will be altered for subsequent years to increase the number of replicates at the locations. If the assumption of replicate sample homogeneity can be met, that is, if the replicates from different locations can be shown to be from the same biological assemblage, then the replicates will be pooled across locations. If this is the case, the MDD is expected to decrease. The calculated MDD will be used to provide the limits for subsequent analyses of that year's data.

5.4 Juvenile Salmonid Utilization Study

5.4.1 Introduction

Previous studies have established the general timing and distributions of juvenile salmonids during their nearshore residence in Commencement Bay (Duker et al. 1989, Jones & Stokes 1989, Jones & Stokes 1992). No direct information is available on length of residence or on the movement of marked fish within the bay. Of particular interest are the juvenile salmonids that enter the bay as small fish (generally <60 mm) (chum salmon, pink salmon, and naturally-produced chinook). These components of the salmonid runs are the most dependent on the nearshore

habitats in Commencement Bay in terms of need for feeding and refuge habitat. Examination of the spatial and temporal patterns of use by marked fish would provide insight into the functions provided by nearshore habitats in Commencement Bay.

5.4.2 Study Objective

To examine spatial and temporal use of habitat by small (generally <60mm) salmonids in the vicinity of the mitigation site to evaluate the function provided by nearshore habitats.

5.4.3 Methods

Overview. Juvenile salmonids will be captured at the mitigation site and spray-marked with fluorescent pigments. Sampling to recapture marked fish will be conducted at the mitigation site and other locations in Commencement Bay. Fish captured during different marking periods will be marked with different color pigments to allow identification of marked groups. During subsequent sampling, captured fish would be examined for marks. Analysis of capture dates and locations would allow conclusions to be drawn about spatial and temporal patterns of habitat use and residence times in the complex of habitats comprising Commencement Bay.

Spray-marking. Spray-marking of juvenile fish involves injection of pigments into the hard portions of the surface of the fish's body (e.g., scales) by use of a high pressure spray gun (Phinney et al. 1967, Phinney and Matthews 1973). These pigments are detectable only under ultraviolet light (blacklight). The advantage of this method over other marking methods is that it allows efficient marking of large numbers of juvenile fish with relatively little handling.

The durability or retention of the pigments in the marked fish is an important factor determining the results and reliability of a spray-marking study. Mark retention will be examined by retaining subsamples of fish from each marking period in separate live boxes or live box compartments in Sitcum Waterway (at the Port of Tacoma dock) or another location. These subsamples will contain juvenile salmonids of various sizes and species if multiple sizes and species have been captured.

These captive fish will be examined under a blacklight during the course of the project to evaluate mark retention over time as a function of fish size and species.

Sampling for Marking and Recapture. Sampling will consist of two distinct but overlapping activities, marking of fish and recapture of marked fish. Fish will be captured by beach seine in intertidal habitats and by a small trawl towed by a boat in the deep-water areas. All sampling will be conducted in a manner that allows quantitative estimates of fish density (no./m^2) in the different habitats.

Fish will be captured for marking by intensive beach seining in the mitigation area at and beyond the mouth of Milwaukee Waterway. Three 3-day sampling efforts will be conducted at this location to mark fish. Each of these 3-day efforts will comprise a marking period during which fish will be spray-marked with the same color pigment. These marking periods will be spaced one week apart. Starting during the second marking period, captured fish will be examined for marks from the previous marking period(s) prior to spray-marking. Any fish captured that are from a previous marking period will not be remarked with a new pigment color.

In addition to examining fish at the mitigation area for marks, sampling to recapture marked fish will also be conducted at the following locations with the listed sampling gear:

- Near the Port office in Sitcum Waterway (beach seine).
- The middle of Sitcum Waterway (small trawl).
- The face of Sitcum-Blair Peninsula (beach seine).
- Slip 5 (beach seine).
- The mouth of Blair Waterway (small trawl).

Sampling at these locations would start during the second marking period and continue for two weeks after the third marking period. The sampling effort at each location would consist of a minimum of one set of the sampling gear per week. The proposed sampling is summarized by activity, location, and sampling week in Table 5-6.

During marking and recapture sampling, captured salmonids will be enumerated by species and measured (fork length). If catches exceed ten fish of one year class of a single salmonid species, then a subsample of ten will be measured to characterize the year class.

Schedule. Two separate studies are proposed, with one encompassing a year when pink salmon are present (an even-numbered spring) and one season without pink salmon (an odd-numbered spring). Studies would be conducted in year 4 and year 7 of the habitat/mitigation monitoring schedule presented in Table 5-3. The schedule of sampling may be shifted as necessary to avoid expenditure of effort in a year when few juvenile salmonids are expected to be present. The determination of whether to conduct sampling during the scheduled year or an alternative year will be made by EPA based on input from the Port. If the Port believes that sampling is not warranted in a particular year due to low numbers of spawners for the brood year (i.e., spawner escapements for the fall preceding the spring sampling were very low), a recommendation to adjust the sampling year will be made to EPA.

The marking experiment would be focused on the period that encompasses the bulk of the outmigration of small juvenile salmonids. Minor adjustment to this schedule may be necessary during the different study years to account for annual variability in weather conditions and difference due to the presence or absence of juvenile pink salmon. The Port will notify EPA not less than 30 days prior to the anticipated first day of field sampling for each project year. In addition, the Port will provide a tentative schedule of monitoring activities for the entire year not less than 30 days before the first day of field sampling for the year. The Port will verbally notify EPA of changes in the sampling schedule not less than 14 days prior to the changed sampling date(s).

Analysis. The location and date of capture will be analyzed to determine residence times in the bay for marked groups. Due to the multiple habitats sampled, it may be possible to determine differential preference for habitat types based on fish density. Further, shifts in preference from one habitat type to another (intertidal habitat to habitat in the middle of the waterway) should be detectable.

5.5 Habitat/Mitigation Contingency Planning Procedures

5.5.1 Introduction

These contingency planning procedures pertain only to the monitoring activities outlined in Section 5.3 above. These procedures do not pertain to any aspects of the water quality monitoring program presented in Section 3.0. The contingency planning procedures consist of three parts: (1) problem recognition, (2) contingency planning, and (3) contingency response. Each is briefly discussed below, followed by a more detailed description.

Problem Recognition Process. The purpose of this process is to conduct a rational and deliberate determination of whether there is a problem and, if so, the nature and extent of the problem. As monitoring data are collected they will be examined and interpreted relative to the early warning triggers or the performance standards as appropriate. If data analysis indicates that elements of the monitoring program are flawed or otherwise inappropriate for evaluating project success, then the contingency planning and response processes will be used to determine and implement an appropriate response.

The early warning step contained within the problem recognition process will enable EPA and the Port to determine whether rapid implementation of contingency planning activities may be warranted.

Contingency Planning Process. The purpose of the contingency planning process is to develop contingency actions that may be necessary depending on the results of future monitoring.

The monitoring plan was designed to track physical processes as well as the biological development of the habitat/mitigation area. Should the monitoring data indicate that problems exist, then based on the determination of EPA and the Port, contingency planning process activities would be initiated to address the situation.

The contingency planning process could result in implementation of an approved contingency response action. Alternately, it could result in agreement on a conceptual approach or a set of criteria for taking further action, pending the results of future monitoring. The process incorporates

applicable permit requirements, interagency consultation, and public review of contingency plans prior to approval, as appropriate.

Contingency Response Process. The purpose of the contingency response process is to implement approved plans for contingency actions. This includes agreement on a final schedule, and completion and monitoring of the response action.

Notes on the Overall Contingency Planning and Decision Making Process. The contingency planning procedures set forth below are described in terms of steps. These steps may not occur in strict numerical order, because certain actions may occur simultaneously or more than once in the planning process.

Lack of specific and timely comment by an agency or entity other than EPA that is given the opportunity to consult or comment under this contingency plan shall be construed as lack of objection.

Nothing in the monitoring and contingency plan regulates or limits the Port from voluntarily conducting additional monitoring, sampling, or contingency planning at its own expense beyond the requirements of those plans. These actions do not require consultation with EPA or other agencies or entities under the plan.

5.5.2 Problem Recognition Process

The problem recognition process is outlined in Figure 5-2.

Step 1: Triggers for Early Warning. The following monitoring results are defined to constitute a significant problem that requires immediate notification:

- Loss of more than five percent of the acreage of intertidal habitat compared to the "as-built" survey.
- Loss of more than 10 percent of the acreage of intertidal habitat compared to the previous survey.
- Reduction in coverage of saltmarsh vegetation exceeding 10 percent compared to the previous survey (see note on Table 5-5).

- Reduction in stem density of more than 25% compared to the previous survey.

- A reduction in epibenthos or infauna of 25%, not matched by a similar reduction in abundance at the reference area.

- Areal coverage of the upland area between the top of the bank and the fenceline with greater than 20% of invasive weedy species.

The following monitoring results are defined to constitute a significant problem but do not require immediate notification:

- Data analysis indicates that specific analysis or performance standards are not statistically valid or are clearly inappropriate for evaluating project success.

Step 2: Notice. In the event that the early warning triggers are exceeded, the Port will provide written and verbal notification to EPA and the agencies within 15 days of receipt of this information and will not wait until submitting a data report. For monitoring activities that require data analysis prior to drawing a conclusion, written and verbal notification will be provided to EPA and the agencies within 21 days.

Step 3: Triggers Defining Significant Problems. The determination whether a problem exists is based on either the early warning triggers or the performance standards (see Section 5.3.1). The tests against the performance standards will occur during years 6, 8, and 10 of the program. However, monitoring results will be evaluated relative to the standards during each year that sampling is conducted. In addition, if the data analysis indicates that specific performance standards or analytical approaches are inappropriate for evaluating project success, then this information will be presented as part of the annual report. Following consideration of the information, EPA and the Port may choose to continue to Step 4 or 5.

Step 4: Meeting and Consultation. Agencies or other entities identified by EPA and the Port may be invited to attend meetings. Meeting notices and agendas will specify that the meeting is part of the problem recognition process to determine what type of response to the monitoring results is appropriate. EPA and the agencies may meet and consult

throughout the contingency planning process and prior to final contingency planning decisions.

Step 5: Response to Problems. EPA will make a final determination on an appropriate response based on proposals by and discussion with the Port. Potentially appropriate responses include, but are not limited to, one or more of the following actions:

- Concluding the situation does not require further action.
- Expanding or modifying the monitoring program.
- Verifying the data.
- Seeking expert advice on the interpretation of monitoring data.
- Developing more specific criteria to evaluate the data or future monitoring.
- Initiating the contingency planning process (see below).

5.5.3 Contingency Planning Process

The contingency planning process is outlined in Figure 5-3.

Step 1: Initiation. The contingency planning process may be initiated after the problem recognition process.

Step 2: Contingency Planning Proposal. The Port will propose contingency response actions that will be taken if necessary to address the problems identified in the problem recognition process. The proposal will include a description and schedule for the Port's proposed response or solution.

EPA will review the contingency planning proposal and may decide to (1) refrain from further action at this time, (2) require further planning, or (3) proceed with implementation (see contingency response process below). A meeting will be held prior to the conclusion of the review period if requested by EPA.

Step 3: Meeting, Consultation, and Further Planning. Agencies or other entities identified by EPA and the Port may be invited to attend contingency planning process meetings. Agencies will be sent a memorandum by EPA summarizing the preliminary decision and requesting comments. A meeting will be held prior to final decision if an agency so requests.

Meeting notices and agendas will specify that the meeting is part of the contingency planning process to determine the nature and timing of appropriate response actions necessary to address potential problems identified in the problem recognition process.

The contingency planning proposal identified in Step 2 may be conceptual in nature. The precise technology, cost, timing, and other matters may be refined though a series of revisions, consultations, and meetings as part of further planning.

Step 4: Approvals for Contingency Planning Proposal. Prior to the conclusion of the contingency planning process, EPA will issue a final determination as to the necessity and type of action required to be implemented by the Port. EPA will also determine, after consultation with the Port, whether permits, or approvals, or public participation are needed to implement the proposal. Agencies will be given an opportunity to review such decisions before EPA issues its final determination.

Following EPA's determination, the Port will submit a draft implementation schedule. EPA has 30 days to review the draft implementation schedule. EPA will not make a determination on a final schedule without prior consultation with the Port and the agencies, although EPA is the final decision-maker for the schedule.

EPA and the Port will initiate permit or approval processes in accordance with the implementation schedule. EPA will assist in obtaining any federal, state, or local permits or approvals as deemed appropriate by EPA. This process may occur prior to the contingency response process (below) if obtaining prior approvals is necessary or desirable to facilitate prompt action.

5.5.4 Contingency Response Process

The contingency response process is outlined in Figure 5-3.

Step 1: Initiation. The contingency response process may be initiated after the contingency planning process.

Step 2: Implementation. Upon approval of the contingency planning process, it is anticipated that the approved description of the work to be performed and schedule will be implemented.

5.6 Habitat/Mitigation Potential Contingency Actions

The contingency planning procedures outlined in Section 5.5 will guide the evaluation, selection, and implementation of any contingency actions. In the event that a contingency response is warranted, the Port will consider actions including, but not limited to, the following:

- Further evaluation, monitoring, or contingency planning activities;
- Modification of substrate sizes by placement of additional or different substrates;
- Construction of a wave attenuation fill or structure;
- Placement of additional fill to replace habitat lost by small-scale erosion;
- Placement of additional fill to reduce slopes;
- Reconfiguration of the beach contour;
- Replanting of additional vegetation (either the same or different species depending upon previous success);
- Maintenance dredging in Mitigation Area 2 (would only be considered if dredging were expected to be required infrequently);

- Increasing the height, length or configuration of the training wall at the mouth of the Puyallup River (This action would be contingent upon and require coordination and cooperation of the U.S. Army Corps of Engineers to determine what action would need to be taken and how it would proceed. No modification of the training wall can occur without the coordination and approval of the U.S. Army Corps of Engineers.);

- Placement of additional habitat features (e.g., larger rock for algal attachment); and

- Expansion of productive habitat at the expense of less productive habitats within the designed limits of the mitigation area.

Table 5-1. Physical monitoring program overview.

	Parameters Measured	Season
"As-built" survey	A. Acreage by habitat type	Within several months of construction
	B. Elevation of transects	Within several months of construction
	C. Substrate characterization	Within several months of construction
	D. Photo points	Within several months of construction
Post-construction surveys	A. Acreage by habitat type	Spring or Summer
	B. Elevation of transects	Spring or Summer
	C. Substrate characterization	Spring or Summer
	D. Photo points	Summer

Table 5-2. Biological monitoring program overview.

Habitat Type[1]	Habitat Attributes	Quantitative Performance Standards	Habitat Parameters[2]	Sampling Periods	Season	Sampling Locations[3]	Replicates[4] per Location
Emergent marsh	1. Plant assemblage and coverage	Yes[5]	A. Plant assemblage B. Percent cover by species C. Shoot or stem density by species	1	Summer	10	1
	2. Avifauna	No	A. Species occurrence	4	Once a season	1	
Sandflat/mudflat	1. Benthic microalgae	No	A. Total standing stock	1	Spring	1	5
	2. Benthic macroalgae	Yes[5]	A. Percent cover	1	Summer	10	1
	3. Avifauna	No	A. Species occurrence	4	Once a season	1	
	4. Epibenthic plankters	Yes[5]	A. Species occurrence B. Settled volume C. Density and standing stock	3	Spring	25[6,7,8]	1
	5. Benthic infauna	Yes[5]	A. Species occurrence B. Density and standing stock	1	Spring	8[9, 10]	10[11]
Gravel/cobble	1. Benthic macroalgae	Yes[5]	A. Percent cover	1	Summer	20	1
	2. Avifauna	No	A. Species occurrence	4	Once a season	1	
	3. Epibenthic plankters	Yes[5]	A. Species occurrence B. Settled volume C. Density and standing stock	3	Spring	25[6,7,8]	1
	4. Benthic infauna	Yes[5]	A. Species occurrence B. Density and standing stock	1	Spring	8[9,10]	10[11]
Upland habitat	1. Plant assemblage and cover	Yes[12]	A. Percent survival B. Species diversity C. Percent cover	1	Summer	25	1
	2. Avifauna	No	A. Species occurrence	4	Once a season	1	

1 Habitat categories are based on Simenstad et al., 1991.
2 Methods will follow Simenstad et al. (1991) where possible.
3 Number of sampling locations at the mitigation site, including archived samples. This number does not include the locations at the reference site.
4 Number of replicates per location per sampling period.
5 Performance standards are based on comparisons to reference area.
6 During the first year of sampling five locations will be sampled, and no sampling will occur at a reference site.
7 The samples from ten of these locations will be archived.
8 Twenty-five locations will be sampled at an appropriate reference site. One sample will be collected at each location. The samples from fifteen locations will be analyzed and the samples from the other ten locations will be archived.
9 The eight locations will be split equally between two sampling strata.
10 Two locations will be sampled at an appropriate reference area. Ten replicates will be collected at each of these locations, eight replicates will be analyzed, and two will be archived.
11 Eight replicates will be analyzed and two archived.
12 Performance standards are based on comparison to set values.

Table 5-3. Mitigation monitoring program master schedule.

Prior to Monitoring		1994				1995				1996[1]				1997				1998[1]				1999			
		Year 0				Year 1				Year 2				Year 3				Year 4				Year 5			
		Quarter				Quarter				Quarter				Quarter				Quarter				Quarter			
Habitat Type	Activity	1	2	3	4	1	2	3	4	1	2	3	4	1	2	3	4	1	2	3	4	1	2	3	4
Emergent Marsh	* Plant saltmarsh vegetation					X[3]																			
Gravel/Cobble	* Place select substrates			X[3]																					
Upland	* Plant upland vegetation (except at closure berm)				X[3]																				
	* Plant upland vegetation on face and top of the closure berm								X[4]																
	* Present reference areas for EPA approval							X[5]																	
Monitoring																									
Habitat Type	Habitat Attribute																								
Emergent Marsh	1. Plant assemblage and coverage											X								X					
	2. Avifauna									X	X	X	X					X	X	X	X				
Sandflat/Mudflat	1. Benthic microalgae										X								X						
	2. Benthic macroalgae											X								X					
	3. Avifauna									X	X	X	X					X	X	X	X				
	4. Epibenthic plankters						X				X								X						
	5. Benthic infauna									X								X							
Gravel/Cobble	1. Benthic macroalgae											X								X					
	2. Avifauna									X	X	X	X					X	X	X	X				
	3. Epibenthic plankters						X				X								X						
	4. Benthic infauna									X[6]								X[6]							
Upland Habitat[4]	1. Plant assemblage and coverage							X				X								X					
	2. Avifauna									X	X	X	X					X	X	X	X				
Physical Monitoring						X[7]					X				X[8]					X					
Salmon Utilization Study																				X[9]					
Report Submittal (all activities)									X[10]					X[10]		X[10]									X[10]

Table 5-3. Mitigation monitoring program master schedule (continued).

Monitoring		2000 [2]				2001				2002 [2]				2003				2004 [2]				2005			
		Year 6				Year 7				Year 8				Year 9				Year 10				Year 11			
		Quarter				Quarter				Quarter				Quarter				Quarter				Quarter			
Habitat Type	Habitat Attributes	1	2	3	4	1	2	3	4	1	2	3	4	1	2	3	4	1	2	3	4	1	2	3	4
Emergent Marsh	1. Plant assemblage and coverage			X								X								X					
	2. Avifauna	X	X	X	X					X	X	X	X					X	X	X	X				
Sandflat/Mudflat	1. Benthic microalgae		X								X								X						
	2. Benthic macroalgae			X								X								X					
	3. Avifauna	X	X	X	X					X	X	X	X					X	X	X	X				
	4. Epibenthic plankters		X								X								X						
	5. Benthic infauna	X								X								X							
Gravel/Cobble	1. Benthic macroalgae			X								X								X					
	2. Avifauna	X	X	X	X					X	X	X	X					X	X	X	X				
	3. Epibenthic plankters		X								X								X						
	4. Benthic infauna	X								X								X							
Upland Habitat	1. Plant assemblage and coverage			X								X								X					
	2. Avifauna	X	X	X	X					X	X	X	X					X	X	X	X				
Physical Monitoring			X								X								X						
Salmon Utilization Study							X[9]																		
Report Submittal (all activities)							X[10]		X[10]						X[10]										X[10]

1. Test against early warning triggers.
2. Test against performance standards.
3. Construction may continue into the quarter following that indicated.
4. The schedule for planting and monitoring upland habitat on the face and top of the closure berm is dependent on the completion of consolidation of the disposal site, construction of the final pavement (cap), and removal of the temporary berm road; and may shift accordingly.
5. Reference areas will be identified for EPA approval at least 6 months prior to sampling. Note that the year 1 sampling of epibenthic plankters does not include sampling at a reference area.
6. Sampling of benthic infauna in the gravel/cobble habitat will begin in year 4. However, if habitat supporting this assemblage exists, it will be sampled in year 2. If habitat has not developed adequately to support infauna, no sampling will be conducted in years 2 or 4.
7. This is the "as-built" survey.
8. Substrate characterization is not conducted during this year. The Port will notify EPA not less than 14 days prior to changing scheduled sampling dates.
9. The Port will notify EPA not less than 30 days prior to sampling.
10. Annual report will be submitted to EPA for approval 2 months after the last monitoring activity of each year.

Table 5-4. Physical early warning triggers and performance standards.

Habitat Type	Functional Objective(s)	Early Warning Triggers[1]	Performance Standards[2]
Emergent Marsh	1. A persistent saltmarsh.	1. See Table 5-5.	1. Areal extent of 0.7 acres of saltmarsh at the end of the monitoring period
Other Intertidal Habitat	1. A persistent habitat.	1A. A reduction of 5 percent in acreage of total intertidal habitat compared to "as built" conditions. 1B. A reduction of 10 percent in acreage of total intertidal habitat compared to the previous survey.	1. The acreage of interitdal habitat must equal the acreages measured in the "as-built" survey.

[1] Applied in years 2 and 4.
[2] Applied in years 6, 8, and 10.

Table 5-5. Biological early warning triggers and performance standards.

Habitat Type	Functional Objective(s)	Early Warning Triggers[1]	Performance Standards[2]
Emergent Marsh	1. A diverse, dense, and self-sustaining saltmarsh.	1A. Loss of 10 percent of the areal coverage of saltmarsh vegetation compared to the previous surveys. [3] 1B. Loss of 25 percent of the density of stems of saltmarsh vegetation compared to the previous surveys. [3]	1A. A minimum of 75% of the coverage measured at the reference site. 1B. A minimum of 75% of the stem density measured at the reference site.

Table 5-5. Biological early warning triggers and performance standards (continued).

Habitat Type	Functional Objective(s)	Early Warning Triggers[1]	Performance Standards[2]
Sandflat/ Mudflat	1. A diverse and abundant assemblage of benthic and epibenthic organisms similar to like habitats in Commencement Bay.	1A. A reduction of 25 percent in abundance of infauna not paralleled by a similar trend in the reference site. (Direct comparison of means.)	1A. Benthic infaunal abundance (clusters in Principle Coordinate Analysis) not statistically less than reference and not less than 75% of the reference cluster mean [4,5]. (First tier)
		1B. A reduction of 25 percent in abundance of epibenthos not paralleled by a similar trend in the reference site. (Direct comparison of means.)	1B. Total number of infauna species not statistically less than reference and not less than 75% of the reference mean [4,5]. (First tier)
			1C. Number of numerically dominant infauna taxa not less than 75% of reference[5] (direct comparison of means). (Second tier)
			1D. Number of numerically non-dominant infauna taxa not less than 75% of reference[5] (direct comparison of means). (Second tier)
			1E. Total numerical abundance of all infauna not less than 75% of reference[5] (direct comparison of means). (Second tier)
			1F. Total wet weight biomass of benthic infauna not less than 75% of reference[5] (direct comparison of means). (Second tier)
			1G. Salmonid prey epifauna (clusters in Principle Coordinate Analysis) not statistically less than reference, and not less than 50% of the reference cluster mean[4,5]. (Second tier)
			1H. Number of salmonid prey epifauna taxa not less than 50% of reference[5] (direct comparison of means). (Second tier)
			1I. Total numerical abundance of salmonid prey epifauna not statistically less than reference and not less than 50% of the reference mean[4,5]. (First tier)
			1J. Total wet weight biomass of salmonid prey epifauna not less than 50% of reference[5] (comparison of means). (Second tier)
	2. Abundant benthic macroalgae similar to like habitats in Commencement Bay.		2A. A minimum of 75% of the coverage in the reference area (direct comparison of means).

Table 5-5. Biological early warning triggers and performance standards (continued).

Habitat Type	Functional Objective(s)	Early Warning Triggers[1]	Performance Standards[2]
Gravel/ Cobble	1. A diverse and abundant assemblage of benthic and epibenthic organisms similar to like habitats in Commencement Bay.	1A. A reduction of 50 percent in abundance of infauna not paralleled by a similar trend in the reference site. (Direct comparison of means.)	1A. Benthic infaunal abundance (clusters in Principle Coordinate Analysis) not statistically less than reference and not less than 75% of the reference mean (clusters)[4,5]. (First tier)
		1B. A reduction of 50 percent in abundance of epibenthos not paralleled by a similar trend in the reference site. (Direct comparison of means.)	1B. Total number of infauna species not statistically less than reference and not less than 75% of the reference mean[4,5]. (First tier)
			1C. Number of numerically dominant infauna taxa not less than 75% of reference[5] (direct comparison of means). (Second tier)
			1D. Number of numerically non-dominant infauna taxa not less than 75% of reference[5] (direct comparison of means). (Second tier)
			1E. Total numerical abundance of all infauna not less than 75% of reference[5] (direct comparison of means). (Second tier)
			1F. Total wet weight biomass of benthic infauna not less than 75% of reference[5] (direct comparison of means). (Second tier)
			1G. Salmonid prey epifauna (clusters in Principle Coordinate Analysis) not statistically less than reference, and not less than 50% of the reference cluster mean [4,5]. (Second tier)
			1H. Number of salmonid prey epifauna taxa not less than 50% of reference[5] (direct comparison of means). (Second tier)
			1I. Total numerical abundance of salmonid prey epifauna not statistically less reference and not less than 50% of the reference mean [4,5]. (First tier)
			1J. Total wet weight biomass of salmonid prey epifauna not less than 50% of reference[5] (direct comparison of means). (Second tier)
	2. Abundant benthic macroalgae similar to like habitats in Commencement Bay.		2A. A minimum of 75% of the coverage in the reference area (direct comparison of means).

Table 5-5. Biological early warning triggers and performance standards (continued).

Habitat Type	Functional Objective(s)	Early Warning Triggers[1]	Performance Standards[2]
Upland Habitat Top of Bank to Fenceline	1. Provide a visual buffer for fish and wildlife using the intertidal habitats.	1A. Survival of 70 percent of planted trees and shrubs.	1A. Survival of 70 percent of planted trees and shrubs.
		1B. No more than 20 percent coverage by invasive weedy species.	1B. Survival of a minimum of three tree species. 1C. Survival of a minimum of four shrub species. 1D. A minimum of 30 percent coverage by shrubs and trees. 1E. A minimum of 70 percent coverage by groundcover, shrubs, and trees. 1F. No more than 20 percent coverage by invasive weedy species.
Sideslope (+12 to Top of Bank)	1. Provide a visual buffer for fish and wildlife using the intertidal habitats.	1. Survival of 50 percent of installed live stakes.	1. Survival of 50 percent of installed live stakes.

[1] Applied in years 2 and 4.
[2] Applied in years 6, 8, and 10.
Triggers will be compared against specifications and As-built surveys for the first sampling period.
$\alpha = 0.05$, $\beta = 0.2$, MDD = minimum detectable difference.
[5] If multiple comparisons are conducted for a single parameter, then the performance standard will be considered to have been met if at least 75% of samples are included in the comparisons meeting the standard.

Table 5-6. Proposed sampling for the salmonid utilization study by activity, location, and sampling week.

Activity/Location	Sampling Equipment	Week				
		1	2	3	4	5
Sampling to Mark Milwaukee Waterway Mitigation Area		X[1]	X[1]	X[1]		
Sampling to Recapture Milwaukee Waterway Mitigation Area	Beach Seine		X	X	X	X
Sitcum Waterway (near Port Office)	Beach Seine		X	X	X	X
Sitcum Waterway (in middle of waterway)	Small trawl		X	X	X	X
Sitcum-Blair Peninsula	Beach Seine		X	X	X	X
Slip 5	Beach Seine		X	X	X	X
Mouth of Blair Waterway	Small trawl		X	X	X	X

[1] A different color pigment will be assigned for each marking period.

FLOW CHART OF PORT GUARANTEES OF STATISTICAL POWER FOR BENTHIC SAMPLING AND ANALYSIS

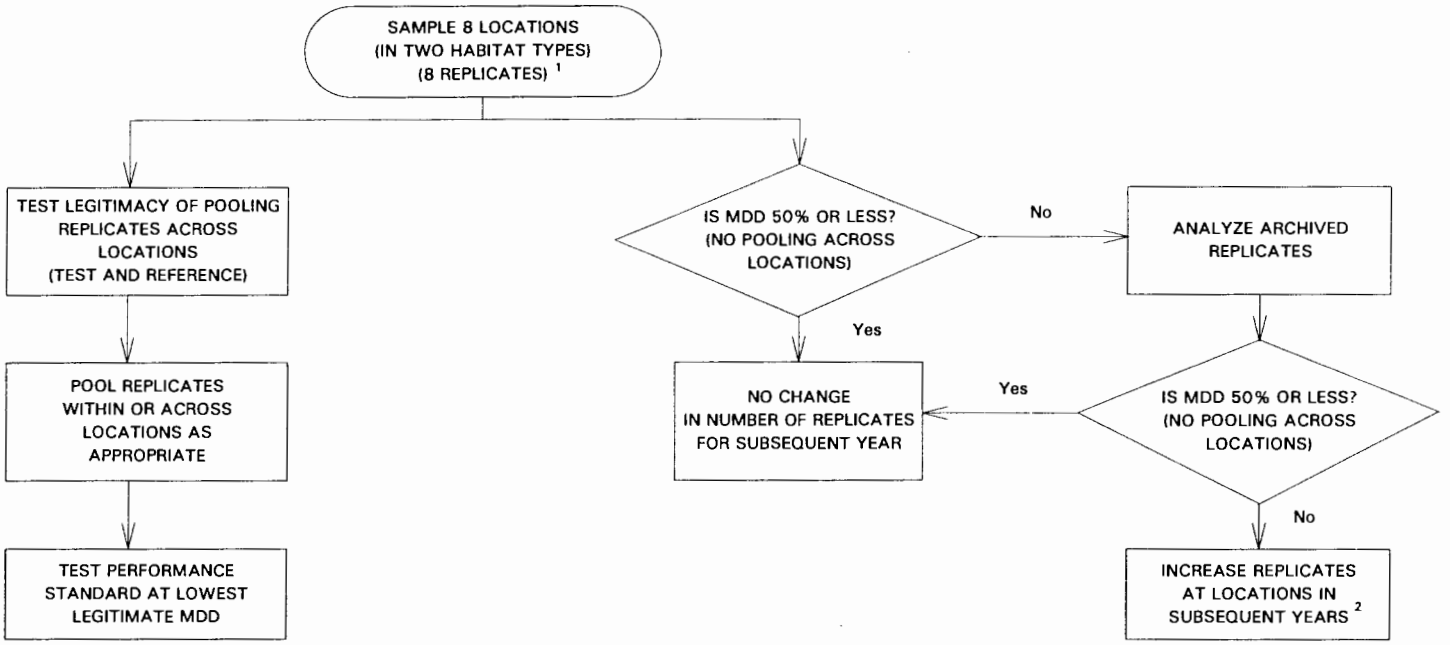

1. Two additional replicates will be archived for each location.

2. The required number of additional replicates will be determined by the MDD that was archived. Section 5.3.3 contains more discussion of statistical power.

Figure 5-1.

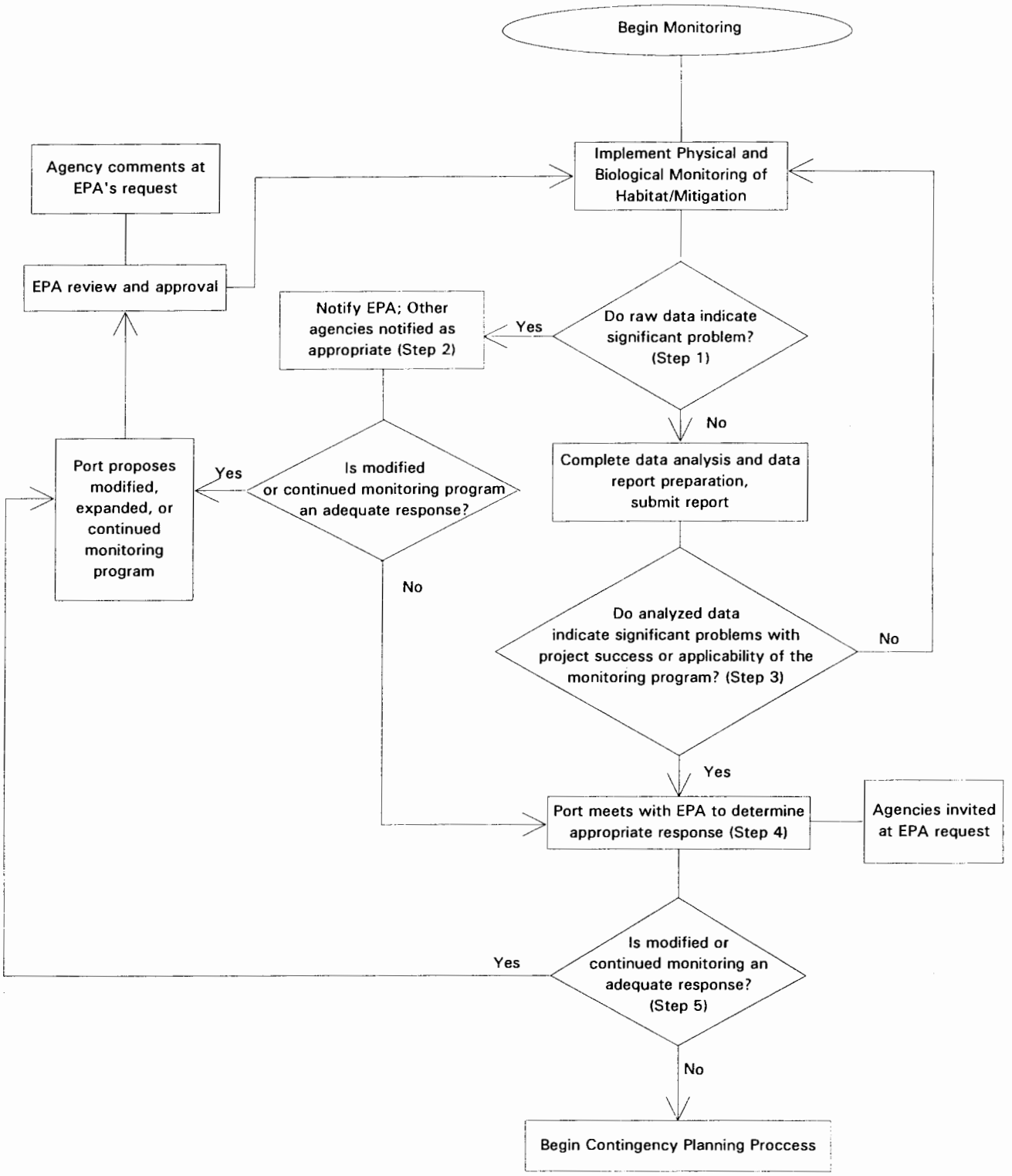
Begin Monitoring
Implement Physical and Biological Monitoring of Habitat/Mitigation
Agency comments at EPA's request
EPA review and approval
Notify EPA; Other agencies notified as appropriate (Step 2)
Yes
Do raw data indicate significant problem? (Step 1)
No
Port proposes modified, expanded, or continued monitoring program
Yes
Is modified or continued monitoring program an adequate response?
Complete data analysis and data report preparation, submit report
No
Do analyzed data indicate significant problems with project success or applicability of the monitoring program? (Step 3)
No
Yes
Port meets with EPA to determine appropriate response (Step 4)
Agencies invited at EPA request
Is modified or continued monitoring an adequate response? (Step 5)
Yes
No
Begin Contingency Planning Proccess

Figure 5-2.

Contingency Planning and Contingency Response Process

Port of Tacoma
February 6, 1995

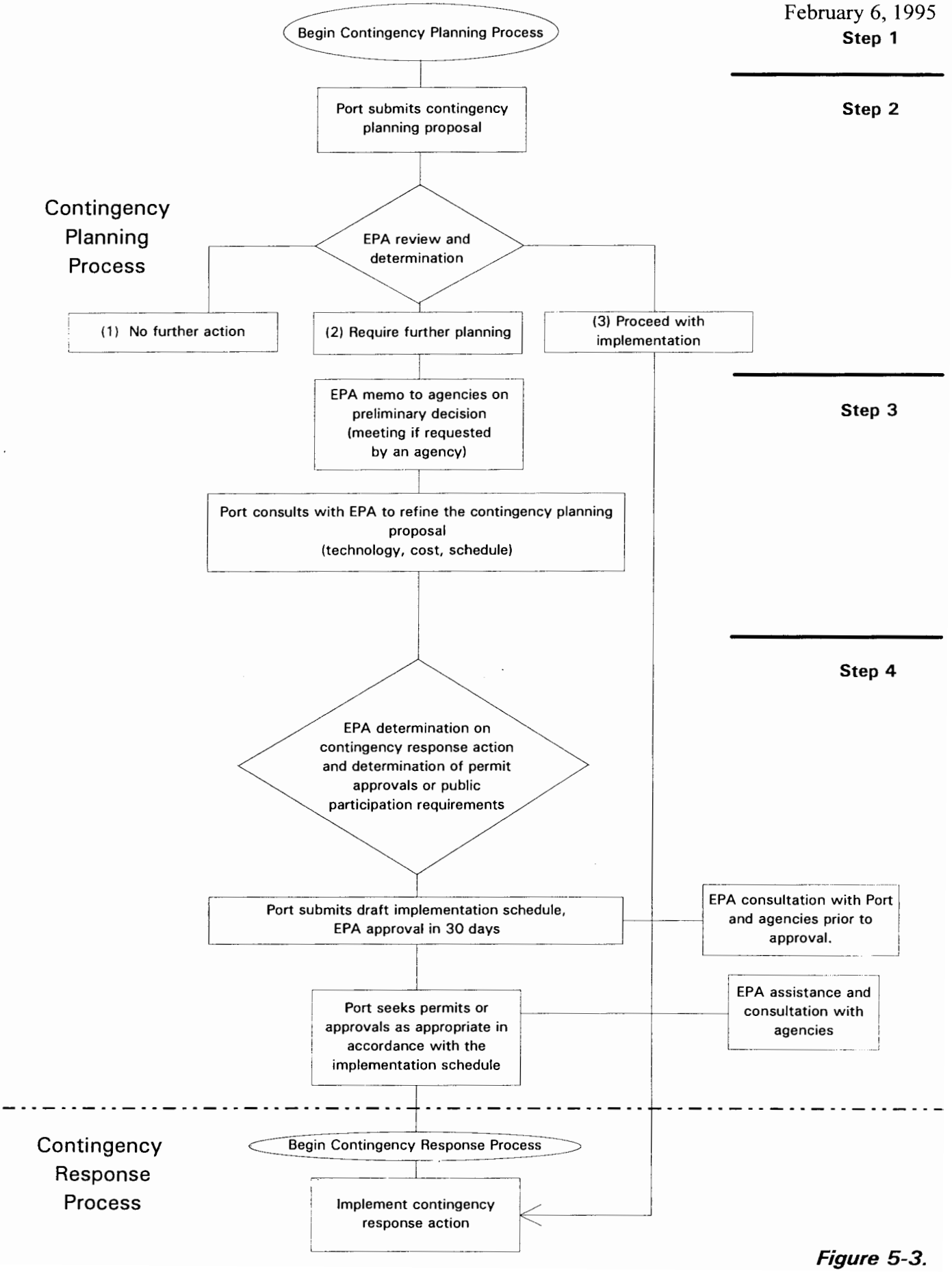

Figure 5-3.

REFERENCES

Duker, G., C. Whitmus, E.O. Salo, G.B. Grette, and W.M. Schuh. 1989. Distribution of juvenile salmonids in Commencement Bay, 1983. Final report to the Port of Tacoma. Fisheries Research Institute School of Fisheries, University of Washington, Seattle, Washington. FRI-UW-8908. 68p

EPA, 1991a. Administrative Order on Consent (Order) for Remedial Design Study.

EPA, 1991b. Statement of Work (SOW) for Remedial Design and Remedial Action for the Sitcum Waterway Problem Area and Other Areas of the Commencement Bay Nearshore/Tideflat Superfund Site.

EPA, 1989. Methods for Evaluating the Attainment of Cleanup Standards Volume 1: Soils and Solid Media. EPA 230/02-89-074 February 1989.

EPA, 1989. Statistical Analysis of Ground-Water Monitoring Data at RCRA Facilities. Office of Solid Waste Management Division, U.S. Environmental Protection Agency, April 1989. EPA/530-SW-89-026.

Gilbert, R.O., 1987. Statistical Methods for Envionmental Pollution Monitoring, Van Nostrand Reinhold Company Inc. New York, New York. 320p

Hale.W.E., 1972. Sample Size Determination for the Log-Normal Distribution, Atmospheric Environment 6:419-422.

Jones & Stokes. 1989. Milwaukee Baseline Monitoring 1988.

Jones & Stokes. 1992. Post-project Monitoring at Slip 5 Mitigation Area, 1991.

Parametrix. 1992a. St. Paul Waterway Remedial Action and Habitat Restoration Project. 1991 Monitoring Report.

Parametrix. 1992b. St. Paul Waterway Remedial Action and Habitat Restoration Project. Draft 1992 Monitoring Report.

Phinney, D.E., D.M. Miller, and M.L. Dahlberg. 1967. Mass-marking young salmonids with fluorescent pigment. Transactions of the American Fisheries Society. 96:157-162.

Phinney, D.E. and S.B. Matthews. 1973. Retention of fluorescent pigment by coho salmon after two years. The Progressive Fish-Culturist. 35:161-163.

Port of Tacoma, 1992. Leaching Test Status Report, Technical Memorandum, Sitcum Waterway Pre-Remedial Design, November 1992.

Port of Tacoma, 1992a. Data Report, Sitcum Waterway Pre-Remedial Design, Phase 1 and Phase 2 Areas, Port of Tacoma, September 1992.

Port of Tacoma, 1992b. Sitcum Waterway Pre-Remedial Design Natural Resource Data Report, Port of Tacoma, September 1992.

Port of Tacoma, 1992c. Sitcum Waterway Remediation Project, Phase 1 Pre-Remedial Design Evaluation and Phase 2 Preliminary Evaluation of Remedial Options Report, Port of Tacoma, September 1992.

Port of Tacoma, 1991. Final Project Plans, Sitcum Waterway Pre-Remedial Design and Related Natural Resources Data Collection, Sitcum, Blair, and Milwaukee Waterways, Port of Tacoma, May 1991.

Simenstad, C.A., C.D. Tanner, R.M. Thom, and L.L. Conquest, 1991. Estuarine Habitat Assessment Protocol, U.S. EPA, EPA 910/9-91-037. 201p

Starks, T.H., 1988. (Draft) Evaluation of Control Chart Methodologies for RCRA Waste Sites. Report by Environmental Research Center, University of Nevada, Las Vegas, for Exposure Assessment Research Division, Environmental Monitoring Systems Laboratory-Las Vegas, Nevada. CR814342-01-3.

Steele, R.G.D. and J.H. Torrie, 1960. Principles and Procedures of Statistics. McGraw-Hill Book Company, New York. 440p

Tetra Tech, Inc., 1986. Recommended Protocols for Measuring Selected Environmental Variables in Puget Sound. Puget Sound Estuary Program (PSEP).

Zar, J. H. 1984. Biostatistical Analysis, 2d ed. Prentice-Hall, Inc. Englewood Cliffs, New Jersey. 718p

Port of Tacoma
June 3, 1994

APPENDIX A
GROUNDWATER SAMPLING OPERATIONS MANUAL FOR THE SITCUM WATERWAY REMEDIATION PROJECT

This appendix names specific contractors for various aspects of work. However, the Port reserves the right to select other qualified contractors with EPA approval.

CONTENTS

Page

APPENDIX A
GROUNDWATER SAMPLING OPERATIONS MANUAL
FOR THE SITCUM WATERWAY REMEDIATION PROJECT A-1

A.1 INTRODUCTION A-1

A.2 PREPARATION FOR SAMPLING A-1

A.2.1 Review this Manual A-2
A.2.2 Know Where to Go A-2
A.2.3 Contact Port of Tacoma A-2
A.2.4 Contact Sea-Land A-2
A.2.5 Contact Laucks Testing Laboratories A-2
A.2.6 Contact Hart Crowser/Field Supplies A-3

A.3 SAMPLING PROTOCOL A-3

A.3.1 Sampling Protocol Consists of Six Activities A-4
A.3.2 Water Depth Measurements A-4
A.3.3 Well Purging A-4
A.3.4 Bottle Labeling A-6
A.3.5 Sample Collection A-6
A.3.6 Sample Collection for Well in Fill A-7
A.3.7 Field Parameters A-7
A.3.8 Leaving the Well A-7

A.4 POST-SAMPLING PROCEDURES A-8

A.4.1 Chain of Custody A-8
A.4.2 Laboratory Services Work Orders A-8
A.4.3 Samples Delivery A-9
A.4.4 Field Report A-9

TABLES

A-1 People to Contact Prior to Sampling Event A-10
A-2 Directions to Sea-Land Terminal and Well Locations A-11
A-3 Summary of Sampling Events A-12
A-4 Supplies and Equipment A-13
A-5 Pump Location in Well/Screened Interval A-14

CONTENTS (Continued)

Page

FIGURES

A-1 Port of Tacoma Vicinity Map
A-2 Sea-Land Terminal Map (Monitoring Well Location Map)
A-3 Laboratory Services Work Order
A-4 Field Equipment and Supplies Form
A-5 Groundwater Monitoring Well System
A-6 Sample Custody Record Form
A-7 Laucks Testing Laboratories Map

ATTACHMENT A-1
BLADDER PUMP OPERATIONS
AND MAINTENANCE MANUAL A-1-1

ATTACHMENT A-2
COMPRESSOR OPERATIONS
AND MAINTENANCE MANUAL A-2-1

ATTACHMENT A-3
CONTROLLER OPERATIONS
AND MAINTENANCE MANUAL A-3-1

ATTACHMENT A-4
QUALITY ASSURANCE PROJECT PLAN
FOR GROUNDWATER QUALITY ANALYSIS
SITCUM WATERWAY REMEDIATION PROJECT A-4-1

ATTACHMENT A-5
LAUCKS TESTING LABORATORIES
QUALITY CONTROL MANUAL A-5-1

ATTACHMENT A-6
BORING LOGS
AND MONITORING WELL INSTALLATION DIAGRAMS A-6-1

ATTACHMENT A-7
HEALTH AND SAFETY PLAN FOR GROUNDWATER SAMPLING
SITCUM WATERWAY REMEDIATION PROJECT A-7-1

APPENDIX A
GROUNDWATER SAMPLING OPERATIONS MANUAL FOR THE SITCUM WATERWAY REMEDIATION PROJECT

A.1 INTRODUCTION

The purpose of this long-term groundwater monitoring program is to assess possible changes in groundwater quality after filling of the Milwaukee Waterway as part of the Sitcum Waterway Remediation Project. Previously, 10 monitoring wells were installed around the Milwaukee Waterway as part of a groundwater monitoring program to establish baseline groundwater quality. Descriptions of the construction details of these wells are included in this plan. As part of this monitoring program, five of these existing wells will be sampled (MW-1, MW-1A, MW-4, MW-5, and MW-7). In addition to the existing wells, seven new wells will be installed as described in Section 3.0. After these wells have been installed, an addendum to this appendix will be produced describing the wells.

The groundwater monitoring system consists of a compressor-driven dedicated bladder pump equipped with a controller box which provides controlled water flow rate. Instructions for the operation and maintenance of the bladder pump, compressor, and controller are detailed in this appendix.

The field manual has been prepared to provide guidance to field personnel involved in this groundwater monitoring program. Any future changes to the groundwater monitoring program (such as installation of additional wells or changes in analyses) will be described in addenda to this appendix.

This manual is organized in three general sections: **PREPARATION FOR SAMPLING**, **SAMPLING PROCEDURES**, and **POST-SAMPLING PROCEDURES**. Reference materials are also provided in tables and figures presented at the end of this appendix, and instructions for equipment use presented as Attachments A-1 through A-3. Attachment A-4 presents the Port's Quality Assurance Project Plan (QAPP) for this project. Attachment A-5 presents the Quality Control Manual for Laucks Testing Laboratories, Inc. Attachment A-6 presents boring logs and construction details for the existing wells, some of which will be monitored for this project. Attachment A-7 presents a project-specific Health and Safety Plan.

A.2 PREPARATION FOR SAMPLING

Before going to the field, a series of steps as discussed in the following sections are necessary.

A.2.1 Review this Manual

Become familiar with this Sampling Operating Procedure. If any questions arise, ask the project manager (Table A-1).

A.2.2 Know Where to Go

Maps and directions to the Sea-Land Terminal and vicinity are provided on Figure A-1. Hardware stores, Port of Tacoma administration offices, restaurants, and hotels are also noted on this figure. Monitoring well location map and directions are presented on Figure A-2 and in Table A-2, respectively.

A.2.3 Contact Port of Tacoma

Notify the Port of Tacoma Project Manager (Table A-1) of sampling schedule.

A.2.4 Contact Sea-Land

Notify the Sea-Land Terminal Manager (Table A-1) of sampling schedule and ask for permission to access the site. Also ask for removal of containers or other equipment that may be obstructing access to the wells.

A.2.5 Contact Laucks Testing Laboratories

Laucks Testing Laboratories (Laucks) is in charge of the chemical analyses of these groundwater samples. About one week before the sampling event, you should call the lab and notify the Lauck's Project Manager (Table A-1) about:

- Date of sampling and date of sample delivery to lab;
- Tests to be performed;
- Number of bottles needed and time of bottle delivery;
- Date you need results; and
- Compensation.

A work order should be completed at this time. Figure A-3 shows an example of a work order form.

Upon receiving bottles from Lauck's, verify that all necessary bottles are present. Organize bottles in coolers (one cooler/well, one cooler for duplicate, and two coolers for MS/MSD sample). Include ice packs and bubble wrap for container protection.

Table A-3 summarizes each sampling event.

A.2.6 Contact Hart Crowser/Field Supplies

The availability of Hart Crowser vehicles is sometimes limited due to the number of projects in progress. Contact the Field Equipment Manager at least a week in advance, or as soon as a sampling date has been established, and reserve a Hart Crowser vehicle. You will need a vehicle large enough to accommodate the compressor/controller, coolers, and other field supplies. A 1-ton van is suggested, if available.

At this time, a Field Supplies/Equipment form can be completed. This will allow the Field Equipment Manager enough time to get everything ready. Figure A-4 presents a sample of a properly filled out Field Supplies/Equipment form. Table A-4 presents a list of required supplies and equipment.

A special note on compressor and controller:

These are kept in the Port of Tacoma locker, lock combination 2350.

The compressor operates on gasoline; therefore, make sure compressor's gas tank is full before you leave Hart Crowser, and take another full gasoline container for refueling in the field. (Refer to Compressor Operation and Maintenance Manual.)

The controller is battery operated and should be left charging overnight. Notify the Field Equipment Manager when you need it and he will get it ready. (Refer to Controller Operating and Maintenance Manual.)

A.3 SAMPLING PROTOCOL

There are two different types of sample collection for this project: samples from the well located in the fill area and all other wells. The differences are described below in Section A.3.5 and A.3.6.

Upon arrival to the site, clear access with the guard at the International Gate. The order of well sampling is not critical. Due to the nature of dedicated pump systems, cross contamination is not expected if good field practices are used. Therefore, the order of well sampling is left to the discretion of the field representative. (Refer to Figure A-2 and Table A-2 for well locations and directions.)

Inspect the area surrounding the well. If well monument is blocked with containers, tires, or other objects, contact the terminal manager at the Dock office; he is in charge of clearing the area for you.

Once the well has been cleared, you are ready to begin.

A.3.1 Sampling Protocol Consists of Six Activities

- Water Depth Measurements
- Well Purging
- Bottle Labeling
- Sample Collection
- Field Parameters
- Leaving the Well

Details for these procedures are outlined below. Items in bold require an entry in the Field Log Book.

A.3.2 Water Depth Measurements

1. Unlock protective casing. You will need an Allen wrench to remove bolts and a large screw driver to lift the protective casing. **Comment on field log about monument/well condition.** Remove accumulated dirt from around the top of the monument.

2. Remove discharge tube, screw it into the male adapter, and place tubing inside of bucket (Figure A-5).

3. Decontaminate well sounder with DI water.

4. Drop probe into hole where discharge tube was kept and determine water level by means of LED or beeper.

5. Measure mark on the probe to the nearest 0.01 foot using a steel tape. **Copy this value into your Field Log Book as the water depth.**

6. Repeat step 3.

A.3.3 Well Purging

1. Start compressor. Turn levers to the CHOKE and FAST position. Pull the cord. Once the compressor is running, adjust to the RUN position, and the speed as desired. Let compressor run a few minutes to warm up. Make sure air hose is not connected to compressor prior to starting. Otherwise, the high pressure will not allow it to start properly.

2. Connect long hose from compressor to controller and shorter hose from controller to the brass valve on top of the well cover.

3. Adjust knobs on controller to a flow of 300 to 500 milliliters per minute. Reduce flow pressure by turning large knob (on right-hand side) several turns to the right. To adjust the length of each stroke, adjust knobs on left side (pressure and exhaust time).

   The flow rate should be adjusted to optimize flow without production of turbid water.

   Pressure time knob adjusts the amount of time exerted on the bladder pump to discharge water. Longer pressure times will allow for a longer continuous flow. Exhaust time knob controls the time for recharging the bladder pump. Longer exhaust times will allow for more water to enter the pump. Different combinations of pressure and exhaust time will give you the appropriate flow. Try different settings until you find the one most appropriate.

4. Begin purging the well. Turn controller to ON position to allow water to run.

5. Calculate the flow rate by timing how long it takes to fill a graduated beaker.

6. Adjust the discharge tube so that the water runs away from the well.

7. Let the well purge until dissolved oxygen and turbidity have stabilized. Measure these field parameters every 3 to 5 minutes. Record these measurements in the field book. Stability is defined by three successive measurements within plus or minus ten percent. Also measure temperature, pH, and conductivity every 3 to 5 minutes. Record these measurements in the field log book. Note that these parameters are also measured after sampling (see Section A.3.7).

Note:

The field representative shall carry an extra bladder pump so that if any bladder pump in use fails, it may be replaced. The field representative should purge until turbidity and dissolved oxygen stabilizes after bladder replacement and before sampling. This ensures that the sampling round will be complete.

A.3.4 Bottle Labeling

1. While the well is purging, label the bottles provided by Laucks. Label each bottle with well number, date and time of collection, your initials, and job number.

2. Prepare the filter for metal collection with appropriate tubing adapters. Attach ¼-inch tubing from the filter to ⅜-inch tubing, Connect ⅜-inch section to the discharge tube.

A.3.5 Sample Collection

1. After purging and labeling the bottles, you are ready to collect samples.

> **Note:**
>
> See Section A.3.6 for sample collection for monitoring well located in fill.

2. Collect samples in the following order:

   - Miscellaneous: (1) 1,000 mL polyethylene blue labeled bottle without preservative.
   - Nutrients: (1) 1,000 mL polyethylene yellow labeled bottle with preservative.
   - Total organic carbon: (2) 40 mL glass vials, teflon septums, and yellow labels with preservative.
   - Attach filter with appropriate fittings to discharge tube. Let 1 liter of water run through filter before the sample is collected.
   - Metals: (1) 1,000 mL polyethylene bottle with red label.

3. Collect a replicate set of samples for all analyses from well MW-4 or other well as determined by the Hart Crowser Project Manager.

4. Place all labeled, filled bottles in coolers packed with Blue Ice.

5. After the cooler is full, seal coolers with chain of custody seals.

A.3.6 Sample Collection for Well in Fill

1. After purging and labeling the bottles, you are ready to collect samples.

2. Collect samples in the following order:

   - Semivolatile organics: (2) 1,000 mL amber glass, teflon lining, blue labeled bottles without preservatives.

   - Pesticides/PCBs: (2) 1,000 mL amber glass, teflon lining, green labeled bottle without preservative.

   - Nutrients: (1) 1,000 mL polyethylene yellow labeled bottle with preservative.

   - Cyanide: (1) 1,000 mL polyethylene green labeled bottle with preservative.

   - Total organic carbon: (2) 40 mL glass vials, teflon septums, and yellow labels with preservative.

   - Attach filter with appropriate fittings to discharge tube. Let 1 liter of water run through filter before the sample is collected.

   - Metals: (1) 1,000 mL polyethylene bottle with red label.

3. Place all labeled, filled bottles in coolers packed with Blue Ice.

4. After the cooler is full, seal coolers with chain of custody seals.

A.3.7 Field Parameters

1. After sample collection, **make a note of water color in your Field Log Book**.

2. Measure dissolved oxygen, turbidity, pH, conductivity, and temperature. Record these measurements in the field log book.

3. Turn off controller and compressor.

A.3.8 Leaving the Well

1. Disconnect hose connecting the well to the controller.

2. Connect short hose for cold weather water discharge from compressor's long hose to Shader valve on well cover.

Warning:

Never use cold weather discharge mechanism with controller attached.

3. Turn on compressor and apply air to the Shrader valve on well cover. This will push residual water out of tubing to avoid damage from freezing.

4. Turn off compressor. Put away hoses.

5. Return discharge tube to its original hole. Cap the well cover. Close monument and screw in bolts.

6. Repeat procedures at each well.

7. Inform the International Gate security guard that you are leaving the premises.

A.4 POST-SAMPLING PROCEDURES

Before sample delivery to Laucks two documents must be completed: Chain of custody form and laboratory work order form.

A.4.1 Chain of Custody

Figure A-6 presents a sample of a completed chain of custody form. Chain of custody should be initiated by you, indicating analyses, number of bottles, and method of delivery. This document should accompany the samples at all times. A copy of this form with all the appropriate signatures will be returned to Hart Crowser with the sample results and is to be kept in project notebook.

Electrical conductivity measurements for each sample will be recorded in the comment section of the chain of custody form. The data will be used by laboratory to estimate the salinity of the sample for analytical purposes.

A.4.2 Laboratory Services Work Orders

Figure A-3 presents a sample Laboratory Services Work Order form. This form should be completed at this time if it hasn't been done yet. As an attachment to this Work Order, include the analytical methods, detection limits, and quality control desired for each analyses. A copy of these

parameters is included in this appendix. Any deviations from these requirements by the laboratory will have to be approved beforehand by responsible Hart Crowser personnel. A copy of this Work Order will be returned to Hart Crowser with sample results and is to be kept in project notebook.

A.4.3 Samples Delivery

Deliver all samples to Laucks immediately after collection. Figure A-7 presents a map and directions to the laboratory.

A.4.4 Field Report

While conducting field work at the site, the Hart Crowser field representative will document pertinent observations and events in a daily field report. Record on the field report:

- Your time of arrival and departure from the site;
- Observations regarding sampling equipment and conditions;
- Arrival and departure of client or agency representatives, topics discussed, and questions or issues to be resolved; and
- Location of duplicate samples.

Upon completion of all field activities, transmit your reports, groundwater sampling forms, and the pink copy of the chain of custody form to the Hart Crowser project manager.

320308\OMMPAPPA.fr

Table A-1 - People to Contact Prior to Sampling Event

Agency	Title	Name (as of 12/93)	Action	Telephone Number
Port of Tacoma	Project Manager	Dick Gilmur	Inform of sampling schedule	838-0142 Seattle 383-5841 Tacoma
Sea-Land	Warehouse Manager or Terminal Manager	Chuck Morrison	Obtain permission to access site. Ask for clear access to wells.	593-1434 Tacoma
Laucks Testing Laboratories	Hart Crowser Project Manager	John Buerger	Obtain bottles; notify samples delivery date.	767-5060 Seattle
Hart Crowser	Project Manager	Philip Spadaro	Questions	324-9530 Seattle

320308\OMMPAPPA.fr

Table A-2 - Directions to Sea-Land Terminal and Well Locations

Sea-Land Terminal	From Seattle take I-5 south toward Tacoma. Exit on Port of Tacoma Road (Exit 136). Continue on Port of Tacoma Road, turning left on Lincoln Avenue (not a major intersection, therefore there is no traffic light. Look for sign on right-hand side of street). Follow Lincoln Avenue to International Gate. Turn right at the International Gate. Stay in the left lane. Identify yourself to the guard at the gate. Refer to Figure A-1.
Well Locations	Refer to Figure A-2.
Well MW-1 and Well MW-1A	Going in through the International Gate, wells MW-1 and MW-1A are in front of the Dock Office on the right side, next to the tire maintenance and repair location. Well MW-1 is closer to the fence (easternmost). Well MW-1A is on container row 2. It might have a container or chassis over it. Chuck Morrison can be contacted in the Dock Office for access if necessary.
Well MW-2	This well is on the south end of container row 39.
Well MW-3	This well is on the south end of container row 73, next to the westerly fence.
Well MW-4 and MW-4A	These wells are located on the north end of container row 24. Well MW-4 is closest to the Milwaukee waterway.
Wells MW-5 and MW-5A	Wells MW-5 and MW-5A are located on the south end of container row 75. Well MW-5 is closest to the Milwaukee waterway.
Well MW-6	This well is located on the south end of container row 18 (between 17 and 18).
Well MW-7	This well is located between the 10th and 11th stall, counting from the northerly end of container row 82.

Note: This table will be modified by an addendum to this appendix after the seven new wells have been installed.

320308\OMMPAPPA.fr

Table A–3 – Summary of Sampling Events

BASELINE MONITORING OF EXISTING WELLS[1]			
Frequency	Wells Sampled	Analytes	Number of QA/QA Samples
Semiannually	MW-1*, MW-1A*, MW-4, MW-5, and MW-7	See Table 3-3	1 Duplicate (MW-4) 1 MS/MSD

BASELINE MONITORING OF NEW WELLS[1]			
Frequency	Wells Sampled	Analytes	Number of QA/QA Samples
Quarterly	MW-8, MW-9, MW-10, MW-11, MW-12, and MW-13	See Table 3-3	1 Duplicate (MW-10) 1 MS/MSD

MONITORING OF MONITORING WELL MW-14[2]			
Frequency	Wells Sampled	Analytes	Number of QA/QA Samples
Semiannually	MW-14	See Table 3-4	None

STAGE 1 GROUNDWATER MONITORING[3]			
Frequency	Wells Sampled	Analytes	Number of QA/QA Samples
Annually	MW-1*, MW-1A*, MW-4, MW-5 MW-7, MW-8, MW-9, MW-10 MW-11, MW-12, and MW-13	See Table 3-3	1 Duplicate (MW-4) 1 MS/MSD

* Sampled at the Port's discretion.

[1] Until statistical baseline has been achieved.

[2] For two years.

[3] Annual until otherwise proposed by Port and approved by EPA or directed by EPA.

JOBS\320308\TABLEA-3.wk1

Table A-4 - Supplies and Equipment

Item	Quantity
DI water	
Alconox	1 packet
Gloves	5 pairs
Paper towel	1 roll
Plastic bags	4 large
Gasoline can (filled)	
6 Feet 1/4-inch tubing	
4 Feet 3/8-inch tubing	
0.45 micron filters	12
Disposable beakers	12
Blue Ice	15
Vehicle - 1 ton van/truck	
Compressor	
Controller	
500 milliliter beaker	
pH, Temperature and conductivity meter	
Turbidity meter	
Electronic well sounder	
Large tool box - Allen wrench	
DI sprayer	5
Buckets	
Traffic cones (safety)	

Note: Field representative will bring an extra bladder pump, located in the Port of Tacoma locker.

320308\OMMPAPPA.fr

Table A-5 - Pump Location in Well/Screened Interval

Well ID	Top of Casing (TOC) Elevation in Feet above MLLW*	Bottom of Well in Feet below TOC	Screened Interval in Feet below TOC	Bottom of Pump in Feet below TOC
MW-1[1]	17.33	28.7	18.7 to 28.7	27.9
MW-1A[1]	17.60	74.2	64.2 to 74.2	69.3
MW-2	17.65	44.5	34.5 to 44.5	40.1
MW-3	18.60	26.2	16.2 to 26.2	25.4
MW-4[1]	17.91	44.3	34.3 to 44.3	37.2
MW-4A	17.76	68.8	58.8 to 68.8	61.7
MW-5[1]	17.20	44.9	34.9 to 44.9	40.2
MW-5A	17.13	74.7	64.7 to 74.7	69.7
MW-6	16.93	18.4	8.4 to 18.4	16.4
MW-7[1]	17.11	48.3	38.3 to 48.3	43.7

* Datum is Port of Tacoma/U.S. Army Corps of Engineers.

[1] These wells are currently included as part of the monitoring program. This table will be modified by an addendum to this appendix after the new wells have been installed.

320308\OMMPAPPA.fr

Port of Tacoma Vicinity Map

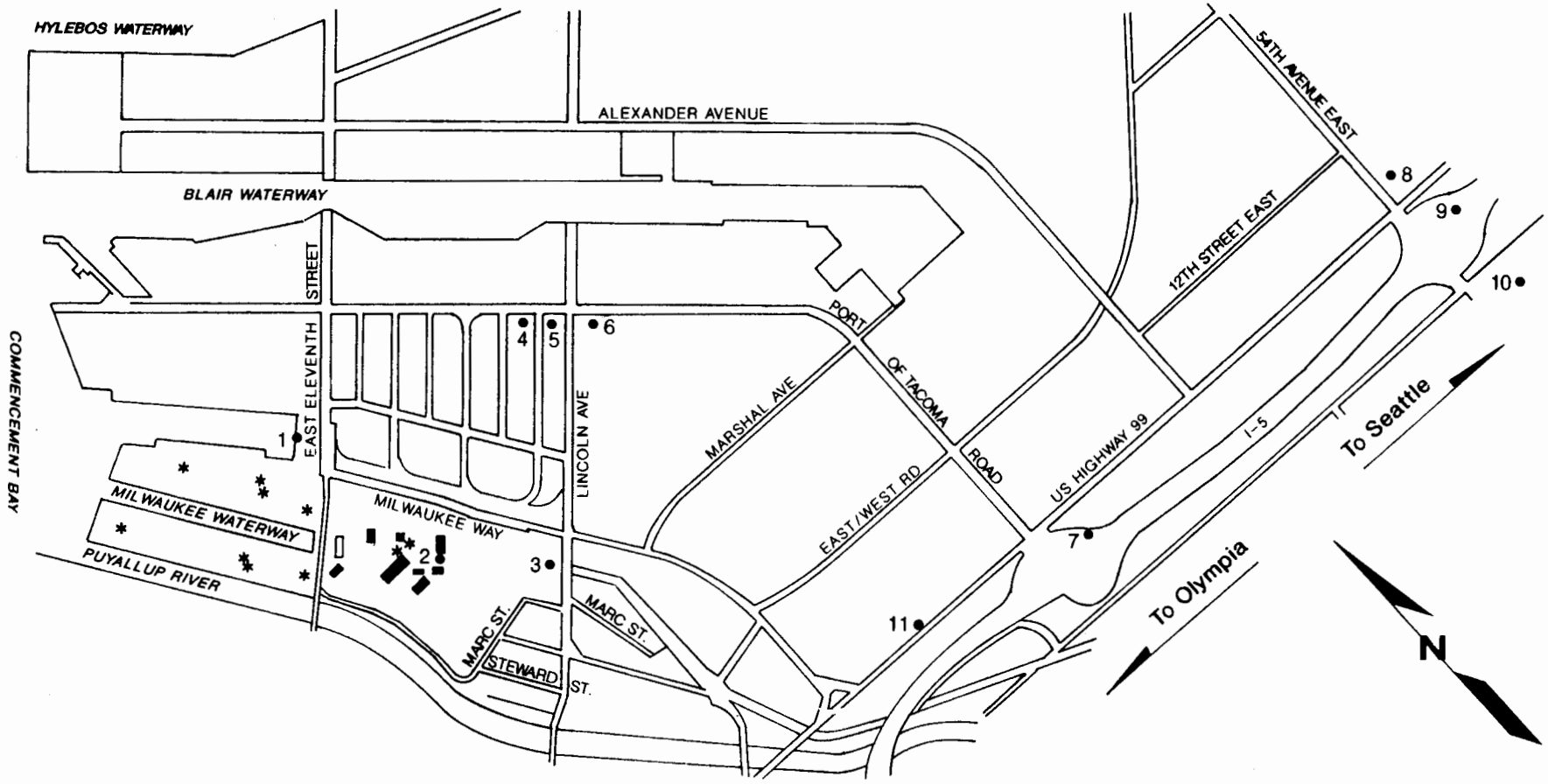

* Existing Milwaukee Waterway Groundwater Monitoring Well

1 Port of Tacoma Administrative Offices
One Sitcum Plaza

2 Sea - Land Terminal and
International Gate Entrance

3 International Gate

4 Platt Electric Sypply
1924 Port of Tacoma Rd.

5 Timco Industrial and Hydraulic Hose and Fittings
1926 Port of Tacoma Rd.

6 Tacoma Screw Industrial Supplies
2222 Port of Tacoma Rd.

7 Exit No. 136 Port of Tscoma Rd.

8 Burger King
Kentucky Fried Chicken
Mc Donalds
Denny's
The Poodle Dog

9 Fife Exit No. 137

10 Shell Gas
Chevron Gas
Best Western Hotel
Comfort Inn Hotel

11 Silver Bullet Restaurant

Note: This will be modified after new wells have been installed.

HARTCROWSER
J-3203-08 4/94
Figure A-1

Sea-Land Terminal Map

Existing Monitoring Well Location Plan

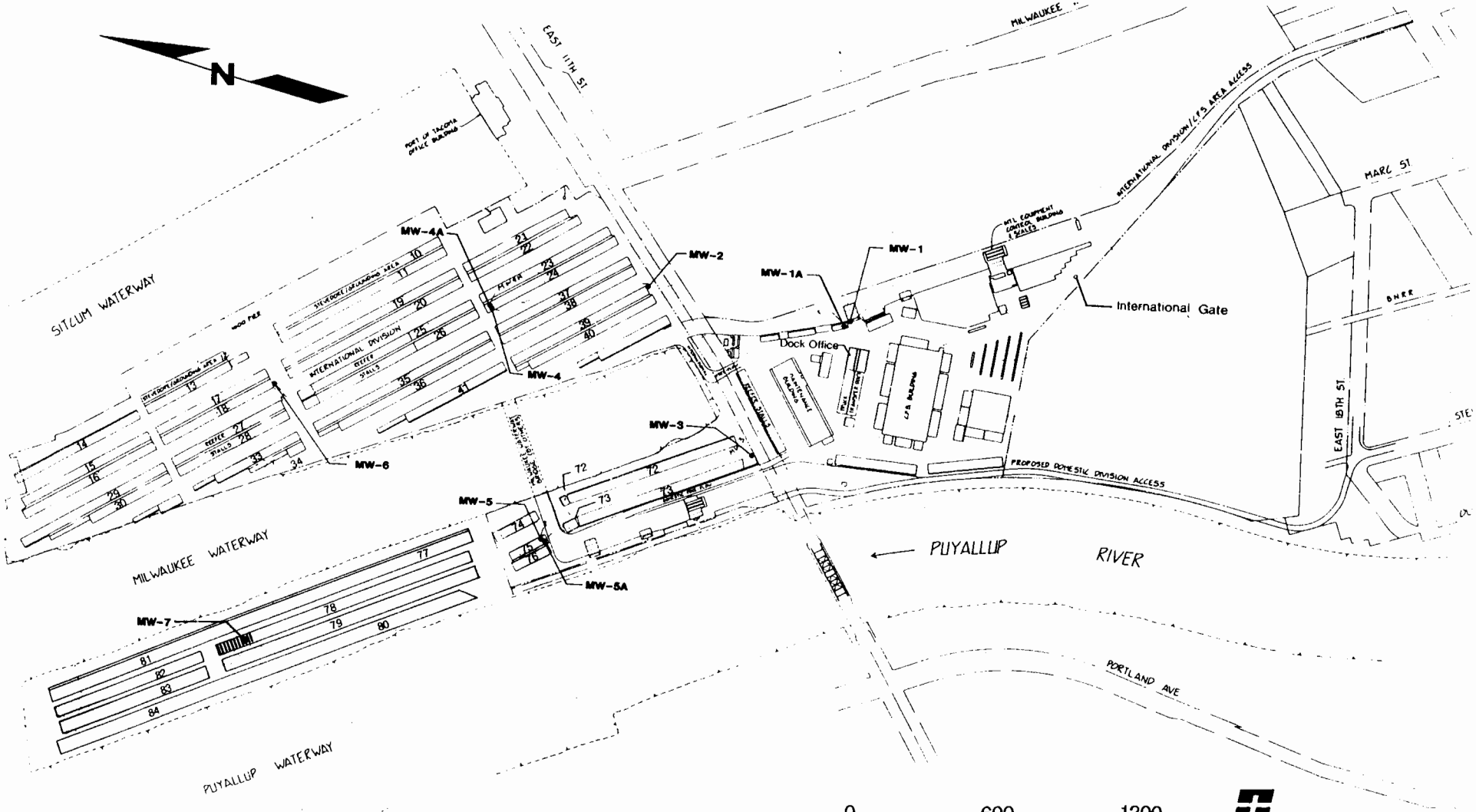

Note: This will be modified after new wells have been installed.

HARTCROWSER

J-3203-08 2/94

Figure A-2

Laboratory Services Work Order Form

HARTCROWSER *Laboratory Services Work Order* *No.* 4198

PROJECT NAME_____ PROJECT NUMBER_____

PROJECT MANAGER_____ TASK MANAGER_____

LABORATORY_____ DATE OF LAB AGREEMENT_____

LAB CONTACT_____ DATE OF WORK ORDER_____

All deliverables, invoices, and correspondence regarding this project will be addressed to:

(check one)

- ☐ *Hart Crowser, Inc.* — *1910 Fairview Ave. E. Seattle, WA 98102-3699*
- ☐ *Hart Crowser, Inc.* — *1201 Jadwin Ave. Suite 204 Richland, WA 99352*
- ☐ *Hart Crowser, Inc.* — *2550 Denali St. Suite 705 Anchorage, AK 99503*
- ☐ *Hart Crowser, Inc.* — *Five Centerpointe Dr. Suite 240 Lake Oswego, OR 97035*
- ☐ *Hart Crowser, Inc.* — *353 Sacramento St. Suite 1140 San Francisco, CA 94111*
- ☐ *Hart Crowser, Inc.* — *One World Trade Center Suite 2300 Long Beach, CA 90831*

Attention_____

I. SCOPE OF SERVICES

_____

_____

_____

_____

Methods of analysis and level of quality control should be specified. If not, selection from established, documented methods will be at the laboratory's discretion and quality control will be performed following the laboratory's in-house protocols.

II. ATTACHMENTS ☐ YES ☐ NO NUMBER OF PAGES_____ Any attachments are incorporated by reference.

III. COMPENSATION

Compensation for work specified above or in attachments shall not exceed amount shown without prior written approval of Hart Crowser's project manager or task manager.

IV. TIME OF PERFORMANCE

Samples will be delivered to the laboratory between the dates of _____ and _____.

Deliverables specified will be received by Hart Crowser no later than _____. The established completion time may only be extended with Hart Crowser's approval, if sample receipt is delayed, or because of unavoidable delays beyond the control of the Laboratory.

V. PRIME AGREEMENT

HC CLIENT_____ DATE OF PRIME AGREEMENT_____

These services are being requested by Hart Crowser because of a prime agreement Hart Crowser has with its client. The obligations under Hart Crowser's agreement with its Client require Hart Crowser to perform certain professional services related to the referenced project. The purpose of this work order is to engage your laboratory to assist Hart Crowser in performing some of these services.

VI. OTHER CONDITIONS

The Subconsultant Agreement for Continuing Laboratory Services between Hart Crowser and your laboratory is herein incorporated and made part of this Work Order. All the terms and conditions of the above referenced agreement are applicable to work performed under this work order.

SUBCONSULTANT

SIGNATURE_____ DATE_____

PRINT NAME_____ POSITION_____

HART CROWSER, INC.

SIGNATURE_____ DATE_____

PRINT NAME_____ POSITION_____

BLUE – HART CROWSER PROJECT FILE

HARTCROWSER

J-3203-08 12/92

Figure A-3

Field Equipment & Supplies Form

HARTCROWSER

FIELD EQUIPMENT & SUPPLIES

Order - Load Out - Billing Form

16002

COMPLETE **RED** AREA ONLY ⟶ PLACE IN **HOT FILE** - BY EQUIPMENT ROOM DOOR

JOB NAME _____ JOB NO _____

PROJECT MANAGER _____ FIELD MANAGER _____

GATE NO.

DATE LOADED

DATE ORDERED _____ DATE REQUIRED _____

SUPPLIES

ITEM	QTY. ORDERED	QTY. DELIVERED	QTY. RETURN	QTY. USED	CODE	UNIT PRICE	EXTENSION
					SUPPLIES TOTAL		

EQUIPMENT

ITEM	DATE OUT	DATE IN	TIME IN USE	CODE	RATE	EXTENSION
				EQUIPMENT TOTAL		

SUPPLIES + EQUIPMENT = JOB TOTAL

WHITE - ACCOUNTING **YELLOW** - PROJECT MANAGER (JOB COMPLETED) **PINK** - STOCKROOM **GOLD** - FIELD MGR.

Groundwater Monitoring Well System

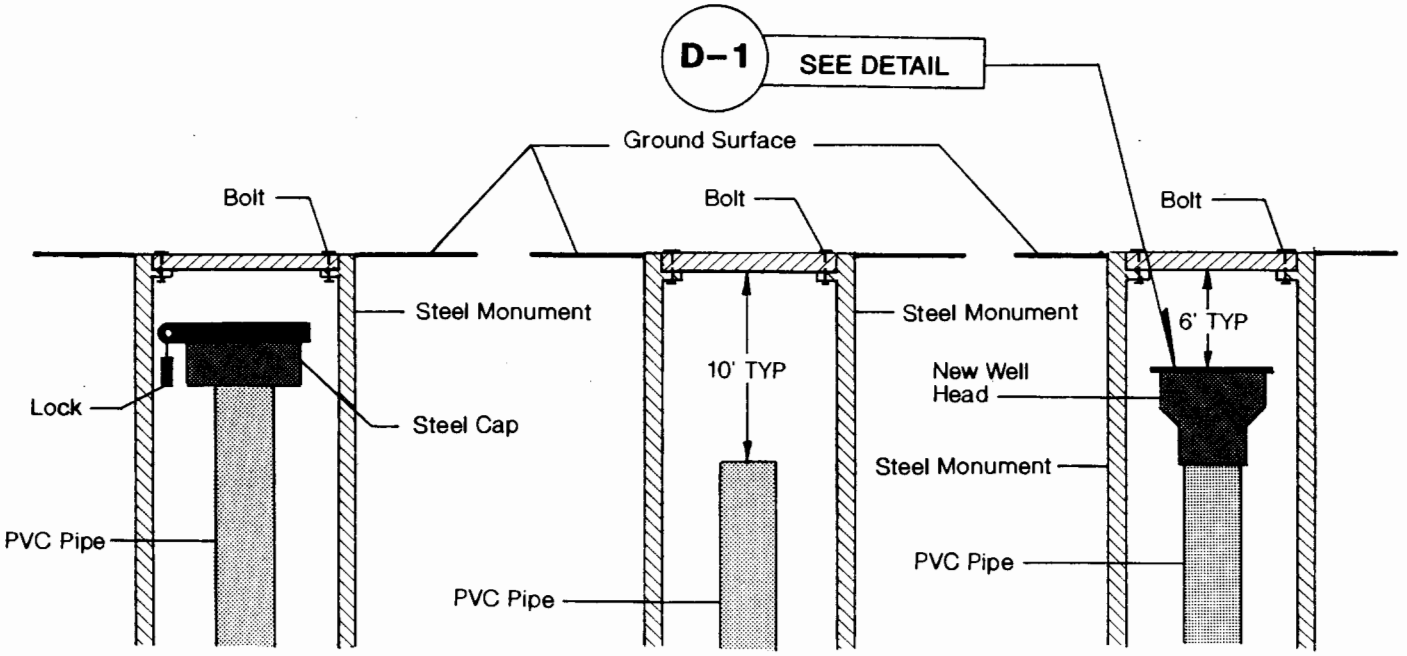

OLD SYSTEM **AFTER CUTTING** **NEW SYSTEM**

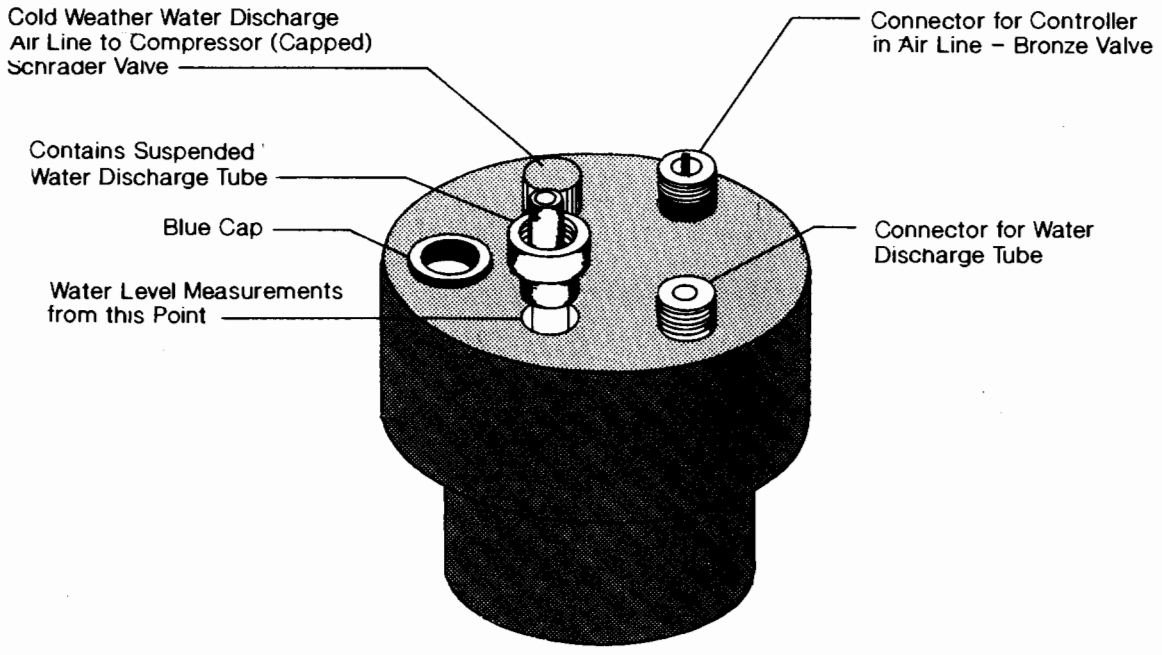

DETAIL D-1

HARTCROWSER
J-3203-08 12/92
Figure A-5

Field Sample Custody Record Form

Sample Custody Record

DATE _____ PAGE _____ OF _____

HARTCROWSER

Hart Crowser, Inc.
1910 Fairview Avenue East
Seattle, Washington 98102-3699

JOB NUMBER _____ LAB NUMBER _____

PROJECT MANAGER _____

PROJECT NAME _____

SAMPLED BY:

LAB NO.	SAMPLE	TIME	STATION	MATRIX	TESTING	NO. OF CONTAINERS	OBSERVATIONS/COMMENTS/ COMPOSITING INSTRUCTIONS

RELINQUISHED BY	DATE	RECEIVED BY	DATE
SIGNATURE	TIME	SIGNATURE	TIME
PRINTED NAME		PRINTED NAME	
COMPANY		COMPANY	
RELINQUISHED BY	DATE	RECEIVED BY	DATE
SIGNATURE	TIME	SIGNATURE	TIME
PRINTED NAME		PRINTED NAME	
COMPANY		COMPANY	

TOTAL NUMBER OF CONTAINERS

METHOD OF SHIPMENT

SPECIAL SHIPMENT/HANDLING OR STORAGE REQUIREMENTS

DISTRIBUTION:

1. PROVIDE WHITE AND YELLOW COPIES TO LABORATORY
2. RETURN PINK COPY TO PROJECT MANAGER
3. LABORATORY TO FILL IN SAMPLE NUMBER AND SIGN FOR RECEIPT
4. LABORATORY TO RETURN WHITE COPY TO HART CROWSER

HARTCROWSER
J-3203-08 2/94
Figure A-6

Laucks Testing Laboratories Map

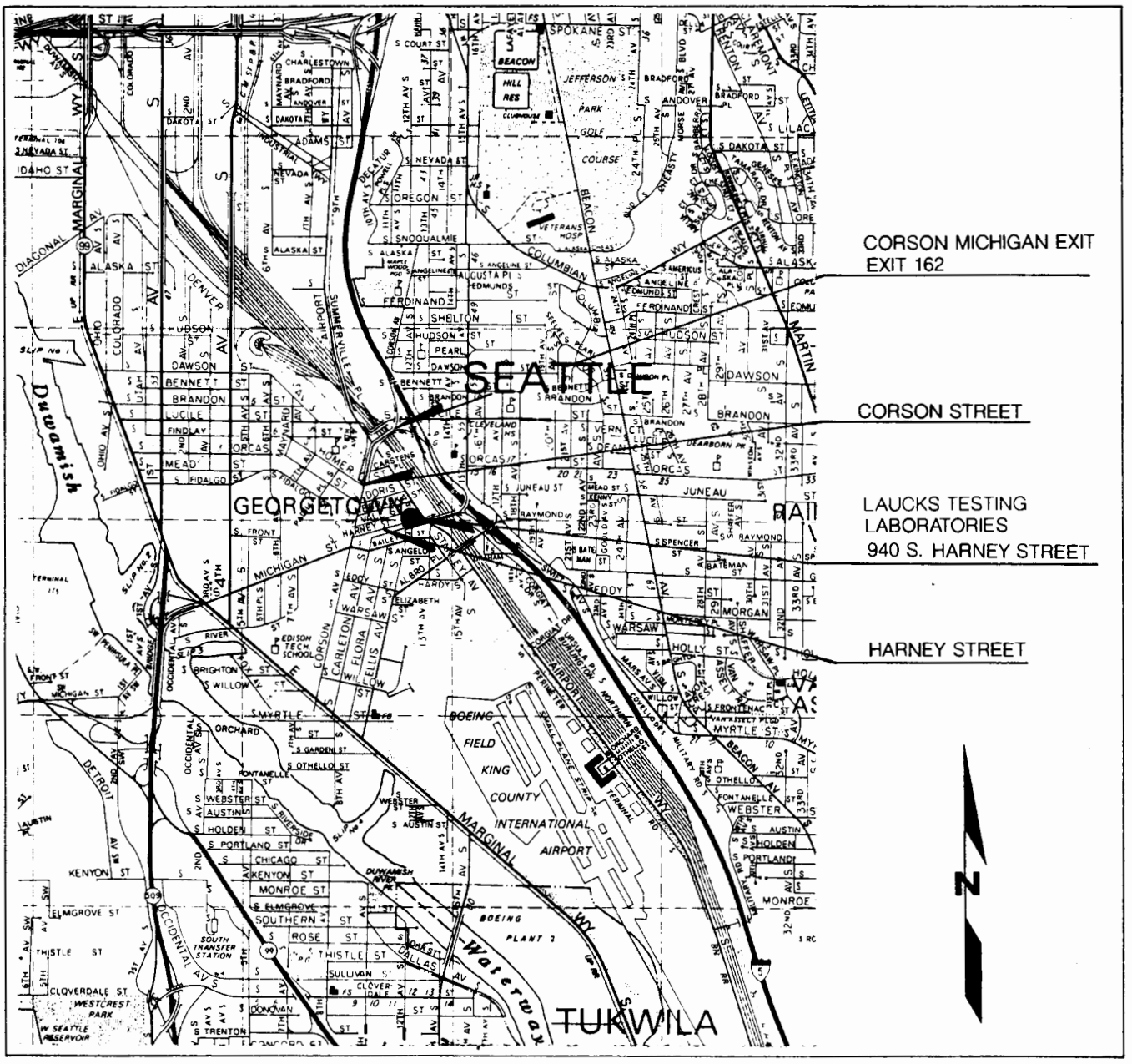

From Downtown Seattle:

Take I-5 Southbound. Exist on Corson – Michigan Streets Exit (Exit 162). One block before traffic light, make a left on to Harney Street. Laucks is halfway down the street on left side at 940 South Harney Street.

From Tacoma:

Take I-5 Northbound. Exit on Corson – Michigan Streets Exit (Exit 162). One block before traffic light, make a left on to Harney Street. Laucks is halfway down the street on the left side at 940 South Harney Street.

HARTCROWSER

J-3203-08 12/92

Figure A-7

Port of Tacoma
June 3, 1994

ATTACHMENT A-1
BLADDER PUMP OPERATIONS AND MAINTENANCE MANUAL

ATTACHMENT A-1
BLADDER PUMP OPERATIONS AND MAINTENANCE MANUAL

This attachment consists of the manufacturer's operations and maintenance manual for the bladder pumps installed in the monitoring wells. Attachments A-2 and A-3 consist of manufacturer's operation and maintenance manuals for the compressor and pump controller, respectively.

An extra bladder pump is kept in the Port of Tacoma locker at Hart Crowser. The field representative shall carry this extra bladder pump so that if any bladder pump in use fails, it may be replaced. This ensures that each sampling round will be complete.

320308\OMMP-ATT.A-1

OPERATING AND MAINTENANCE MANUAL

GEOGUARD MODEL 5915

DEDICATED BLADDER PUMP

Manufacturer and Source of Replacement Parts:

AMERICAN SIGMA, INC.

One Elizabeth Street

P.O. Box 300

Middleport, New York 14105-0300

(716) 735-3616 or (800) 635-4567

Telex 750101 Fax (716) 735-3711

Table of Contents

Introduction	page 1
Model 5915 Bladder Pump	2
Model 5001 Cycle Controller	3
User/Safety Warnings	4
Controller Operation	5
Airline Attachment	6
Automatic Operation	7
Discharge Timer Adjustment	7
Refill Timer Adjustment	8
Flow Rate Adjustment	8
Manual Override	8
Battery/Charger	9
Bladder Pump Schematic	10, 11
Bladder Pump Parts List	12
Bladder Pump Specifications	13

GEOGUARD Dedicated Groundwater Pump

Model 5915

Before using your GEOGUARD Groundwater Sampling System, please read the descriptive material contained herein.

The GEOGUARD Dedicated Sampling System consists of:

- Bladder Pump
- Bonded Twin Tubing
- Well Closure

A drive air source and controller are required to operate your GEOGUARD dedicated bladder pump.

Drive Air Source

The GEOGUARD Model 5404 oil-less compressor assembly has been specifically designed to provide maximum performance for the GEOGUARD Groundwater Sampling System. It consists of an oil-less 125 psi piston compressor rated at 3.25 CFM at 100 psi. It is belt driven by a 3 HP. gasoline engine. Total package weight is 70 lbs.

Alternate Drive Air Sources

The GEOGUARD Groundwater Sampling System may be driven by air compressors or compressed gas cylinders. It is important to note that the equipment is rated for a maximum of 200 psi input pressure. Due to this requirement, a two-stage regulator must be used between the gas bottle and the air line to the controller. Exceeding the 200 psi pressure rating may cause severe damage to the controller as well as personal injury.

Controller

The GEOGUARD Model 5001 automatic cycle controller provides a highly portable and convenient means of cycling the compressed drive air to the GEOGUARD pump. It is housed in a light weight, yet rugged molded carrying case. It comes complete with the necessary air lines for attachment to the groundwater pump and drive air source. As mentioned above, the controller will accept up to 200 psi input pressure, satisfying lift requirements from 430 feet of pumping depth.

The Model 5915 Bladder Pump is constructed of 316 stainless steel and Teflon. All air seals are made using Viton o-rings. The pump is designed and solely recommended for dedicated installations.

The bonded tubing for operation of the pump is standardly available in two configurations: All polyethylene (Model 5896) or with FEP Teflon lined polyethylene water discharge tubing (Model 5897). The individual tubes measure as follows:

Air line	1/4" I.D. x 3/8" O.D.
Water line	3/8" I.D. x 1/2" O.D.

Assembly

The pump is shipped fully assembled, factory cleaned and tested. The tubing standardly pre-cut and assembled to the well head closure (exception: when bulk tubing is supplied). It is the users responsibility to connect the tubing to the pump. The 1/2" O.D. water line connects to the upper check valve compression fitting. Tighten the compression nut 1/2 turn beyond finger tight for a leak tight seal. The 3/8" O.D. air line slips over the S.S. barbed fitting on the pump tube and is held in place with the supplied S.S. hose clamp. The pump is now ready to be inserted into the well.

Disassembly

If the pump requires servicing, the following procedure should be followed to take the pump apart.

a) Remove the 1/2" O.D. water line from the upper check valve by loosening the compression nut.

b) Remove the upper check valve by turning counterclockwise. Remove and save the o-ring seal.

c) Remove the 1/4" O.D. S.S. pin from the lower end of the pump.

d) Pull the bladder out from the pump tube. It is recommended that you keep the lower check valve attached, as it will give you something to grip onto.

Reassemble

Repeat these steps in reverse. Also refer to the cut away drawing on page 10. Typically the only time the pump should be disassembled is to replace the bladder.

Trademarks of DuPont, Inc.

GEOGUARD

Model 5001 Automatic Cycle Controller

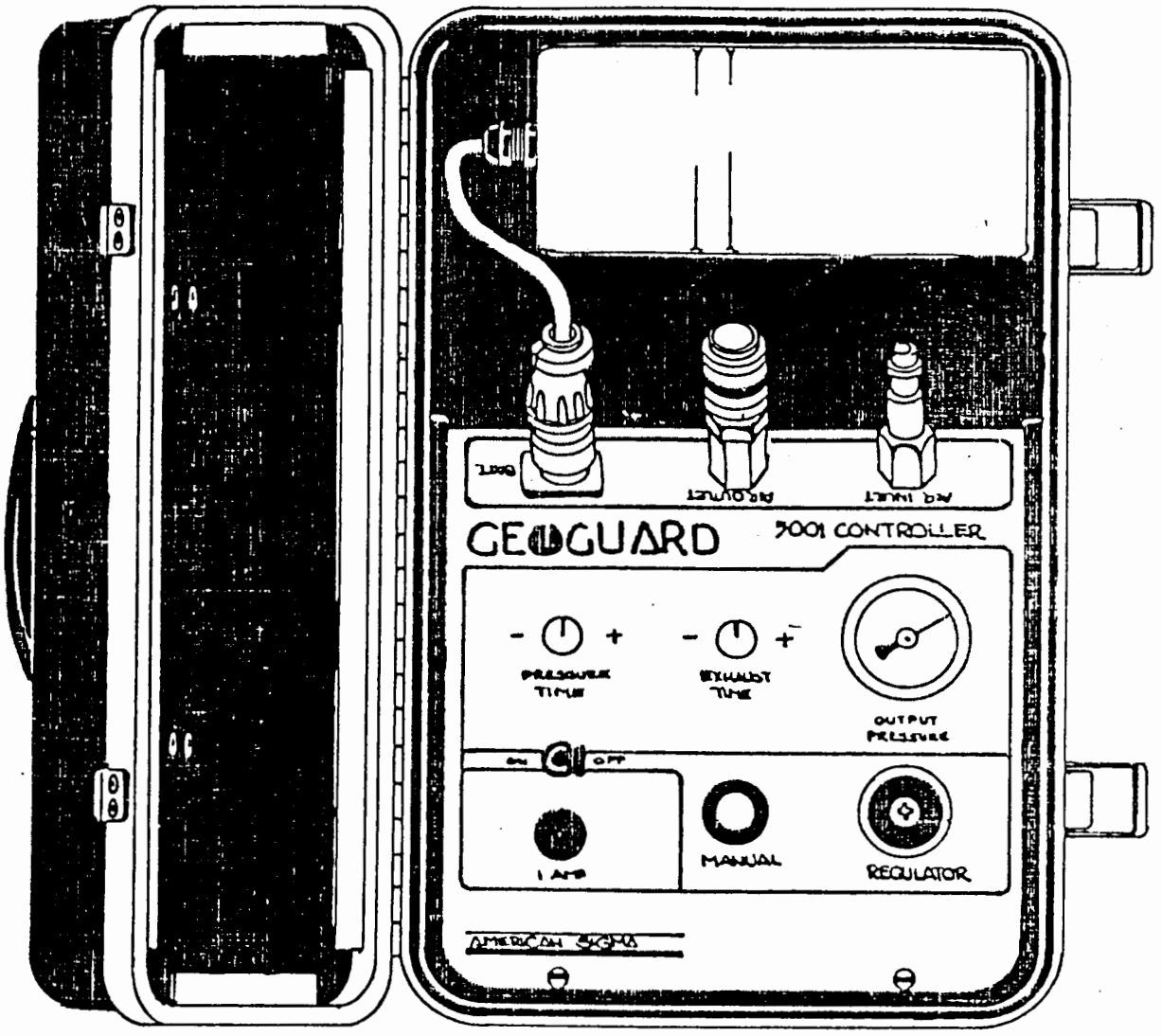

ONE ELIZABETH ST., P.O. BOX 300, MIDDLEPORT, N.Y. 14105-0300 (716) 735-3616

User/Safety Warnings

1) Compressed air can be dangerous. If an air line were to rupture immediately turn off the air supply.

2) Use common sense. Maintain your equipment.

3) If using a bottled gas supply, follow DOT regulations. Always use a two-stage regulator on the tank.

4) AMERICAN SIGMA recommends using a oil-less (i.e. instrument grade) air compressor. It is the operators responsibility to use a filter system to clean up oilly compressed air.

   Consult AMERICAN SIGMA for recommendations.

   Note that a filter is supplied with your unit. Its main purpose is to remove water and particulate from the compressed air supply. It is not a coalescing type filter.

   Any problems that result from failure to use a clean air supply will void warranty.

5) Follow the instructions as contained within this manual. If problems arise consult the factory for assistance.

GEOGUARD Model 5001 Automatic Controller

The GEOGUARD Model 5001 controller is a highly portable and convenient means of cycling the compressed drive air to the GEOGUARD pump. It is housed in a light weight, yet rugged molded polyethylene case. The 5001 Controller is equipped with a pressure gauge which indicates the pressure inside the pump, a flow adjustment which is used to increase or decrease the flow rate of the pump, and two timer adjustments; one for refill and one for discharge. The internal timer board is 100% solid state and is coated with polyurethane for rugged, dependable field use.

The Model 5001 Controller is powered by a 6 amp-hour 12 VDC rechargeable battery. The controller will operate for approximately 40 hours on a fully charged battery. It is also equipped with a mechanical manual override which allows the controller to be actuated without battery power.

The GEOGUARD Model 5001 is standardly equipped with the following accessories:

- 6 Amp-hour 12 VDC gel cell battery
- Battery charger
- 25 feet of 3/8" I.D. air line, with fittings for connecting the controller to the drive air source
- 10 feet of 3/8" I.D. air line, with quick exhaust valve and fittings for connecting the controller to the pump tubing
- High efficiency inlet air filter

The controller is rated for a maximum working pressure of 200 psi, which will operate a Bladder pump, Gas-Drive pump or Two-Stage pump at lift conditions to 430 feet.

Controller Operation

The controller is attached between the compressed air source and the pump tubing. Its function is to regulate the flow of compressed air to the pump. The controller essentially has two systems. One system controls the necessary cycling of the drive air from pressure (discharge) to vent (refill). On the left half of the controller panel are two adjustable knobs. The left knob, marked "Pressure Time", adjusts the time that compressed air is delivered to the pump. Rotating this knob to the left decreases the amount of time that the drive air is allowed to flow into the pump and rotating this knob to the right increases the time of the drive air delivery.

The right knob, marked "Exhaust Time", adjusts the time that the pump is vented to atmosphere. This venting allows the pump to refill after discharging. Rotating this knob to the left decreases fill/vent time, rotating this knob to the right increases fill/vent time.

The second system is located on the right side of the controller panel. At the top right is a pressure gauge which has a range of 0 to 300 psi. Immediately below the gauge is a large knob used to regulate pressure of the drive air. The function of this knob is to increase or decrease drive air pressure which in turn controls the flow rate of the pump. Rotating this knob all the way to the right will cause the pump to discharge as rapidly as possible in any given situation. Rotating this knob to the left will decrease flow rate.

Air Lines

Two compressed air lines are supplied with the Model 5001 Controller. One air line has a large female quick-connect fitting at both ends. One end is for connection to the corresponding male quick-connect fitting on the controller panel, and the other end is for attachment to the drive air source.

The other air line has a "quick exhaust" valve with a small female quick-connect fitting attached at one end and a male quick-connect fitting at the other end. The male quick-connect attaches to the corresponding female quick-connect on the controller panel. The small female quick-connect is for attachment to the corresponding male quick-connect fitting located at the top end of the pump tubing assembly.

Air Line - Controller/Compressor

Part No. 5008

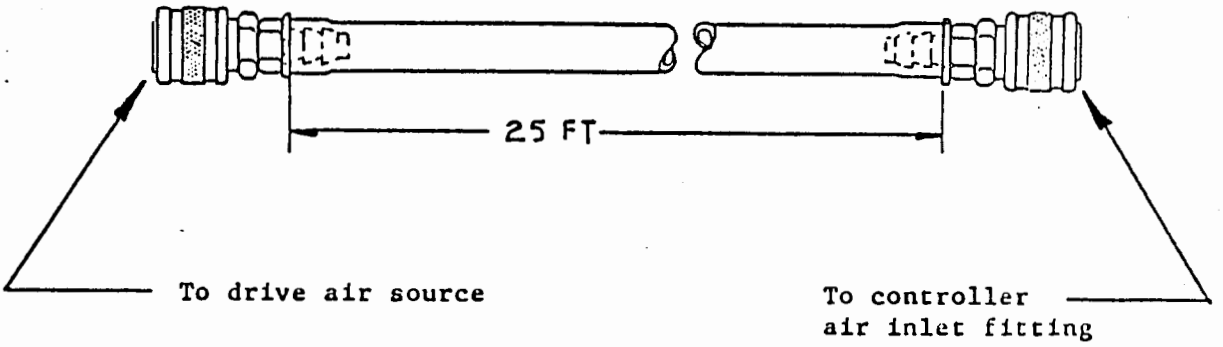

Air Line - Controller/Splitter

Part No. 5009

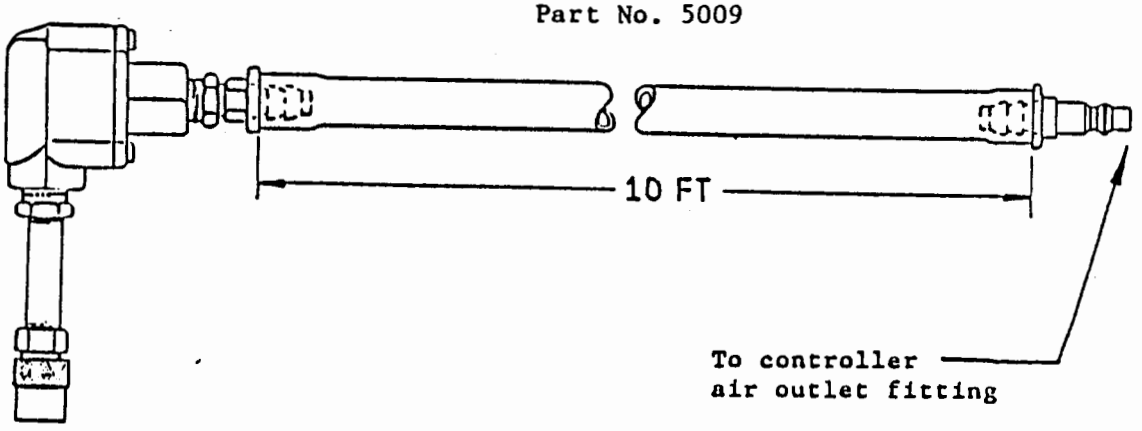

Note: Never have the controller "on" without this end of airline attached to pump air fitting. This may cause the internal pink gasket to be blown out of place.

Automatic Operation

Optimum performance of the pump is achieved by proper adjustment of the pressure and exhaust timers. When properly adjusted the controller will switch from exhaust (refill) to pressure (discharge) at the moment the pump is completely full; and will again switch from pressure (discharge) to exhaust (refill) at the moment that the pump is sufficiently evacuated.

In the field this adjustment is very simple and rapid to accomplish, although trying to follow the written explanation may seem confusing. With a little practice these adjustments will take only seconds.

Using the GEOGUARD System

- Install the pump and tubing assembly in the well.
- Connect the 12 VDC battery to the controller.
- Attach the 10 foot airline from the controller to the pump tubing.
- Attach the 25 foot airline form the controller to the drive air source. (Be sure to have the inline air filter attached to the controller).

Note: If using a gas bottle as the drive air source, a 200 psi two-stage regulator must be used on the gas bottle. Failure to do so may result in damage to the controller and possible personal injury.

- Rotate the pressure time knob until the line on the knob face is at approximately 10 o'clock. This corresponds to approximately 13 seconds.
- Rotate the exhaust time knob until the line on the knob is at approximately 9 o'clock. This corresponds to approximately 7 seconds.
- Turn the drive air source on.
- Move the toggle switch to the "on" position.
- Let the controller go through 3 to 5 full cycles before re-adjusting the pressure and exhaust timers. This will allow the pump discharge tubing to fill with water.

Pressure Time Adjustment (Discharge Mode)

- When water begins to flow from the discharge tubing, watch the flow relative to the pressure time. One of the following will occur:

A) If the controller switches to the exhaust mode (recognizable by the hiss of escaping air) before water stops flowing from the discharge tube increase the pressure time by rotating the knob slightly to the right (clockwise). Allow the controller to go through one complete cycle. Continue to rotate the knob to the right (allowing one full cycle between adjustments) until the controller switches to exhaust just as water stops flowing from the discharge tube.

B) If water stops flowing from the discharge tube before the controller switches to exhaust, decrease the pressure time by rotating the knob slightly to the left (counterclockwise). Allow the controller to go through one complete cycle. Continue to rotate the knob to the left (allowing one full cycle between adjustments) until the controller switches to exhaust just as water stops flowing from the discharge tube.

Exhaust Time Adjustment (Refill Mode)

- The exhaust mode adjustment is similar to the pressure mode adjustment except that this adjustment vents the pump until it can completely refill.

- Adjustment of the exhaust time (pump refill) should follow the pressure time adjustment.

- It is possible to determine when the optimum refill time is achieved by first adjusting the discharge timer as previously explained. Adjust the exhaust time by observing the discharge of water from the discharge tubing. If the pressure time is properly adjusted such that the controller switches from pressure to exhaust at the moment flow from the discharge tube stops, then just enough pressure time is applied to evacuate a completely full pump.

If the exhaust time is shortened to the point that the pump is not completely full, then the water will stop discharging before the controller switches from pressure to exhaust. If this occurs, increase the exhaust time by rotating the knob slightly to the right to allow the pump to completely refill.

Note: In a draw down situation (where the submergence is decreasing) more exhaust time may be required to allow the pump to completely refill. Monitor the volumetric output if possible.

Flow Rate Adjustment

The large knob on the lower right corner of the controller panel labeled "regulator" is used to control the flow and pressure of the drive air to to the pump.

Note: .5 psi is required per foot of pumping depth to develop flow.

For maximum flow and pressure, rotate this knob fully clockwise. Maximum flow rate may be desired during the purge activity. However, when sampling for sensitive parameters where sample agitation or aeration must be avoided, or when pumping through a flow cell, the flow from the discharge tube may be decreased by rotating the regulator knob in a counterclockwise direction. The output pressure gauge on the panel indicates the pressure within the air line to the pump and operates only when the controller is in the pressure (discharge) mode.

Controller Mechanical Manual Override

Under some circumstances it may be useful to apply pressure to the pump for a longer duration than allowed by the 1-40 second adjustable timers. Examples of this might be when using a flow cell where very low flow through the cell is desired or when using in-line filters.

The push-button marked "manual" located directly beneath the "exhaust time" knob is provided to allow the controller to be actuated manually. Manual operation of the Model 5001 does not require battery power.

To operate the controller manually, simply depress the button fully to deliver drive air to the pump and release it to allow the pump to refill.

Charging the Battery

A new, fully charged battery will offer up to 40 hours of service. When the battery has been 90% drained a 16 hour recharge is required. By periodically charging the battery after a day or two of usage, an overnight charge will generally be suffient.

The charger supplied is a constant voltage, limited current type. Therefore it will not cause the battery to be overcharged. Please note that the charger is rated for indoor use only as it is of an ungrounded configuration.

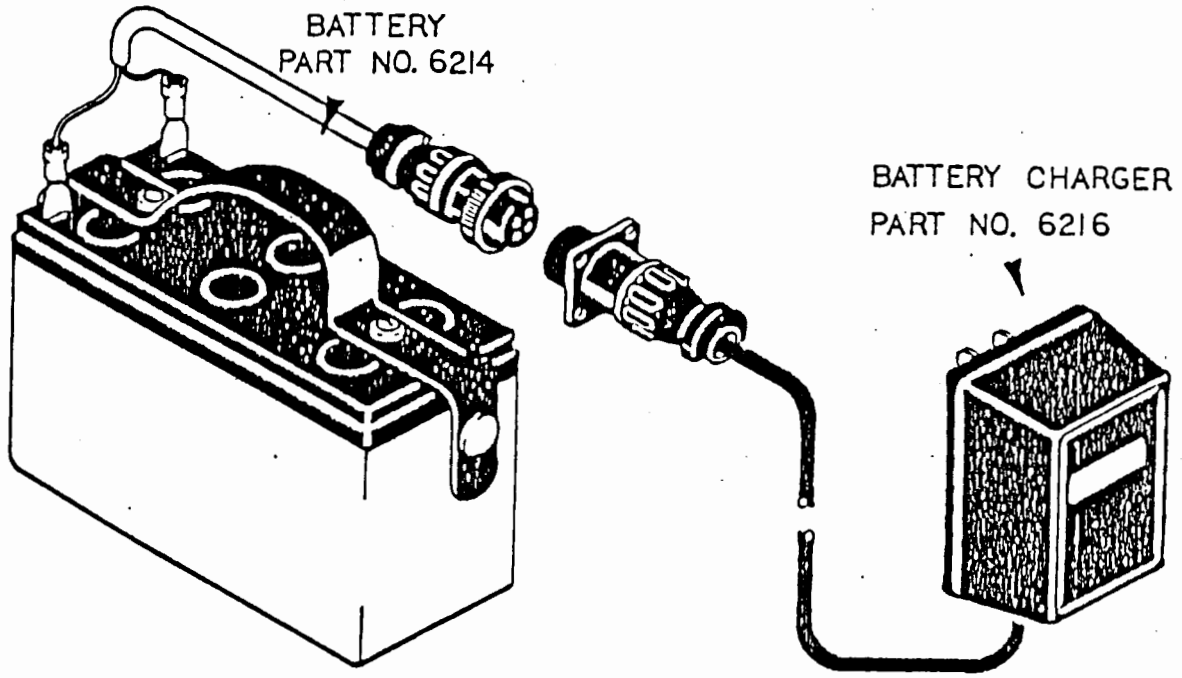

MODEL 5915 BLADDER PUMP

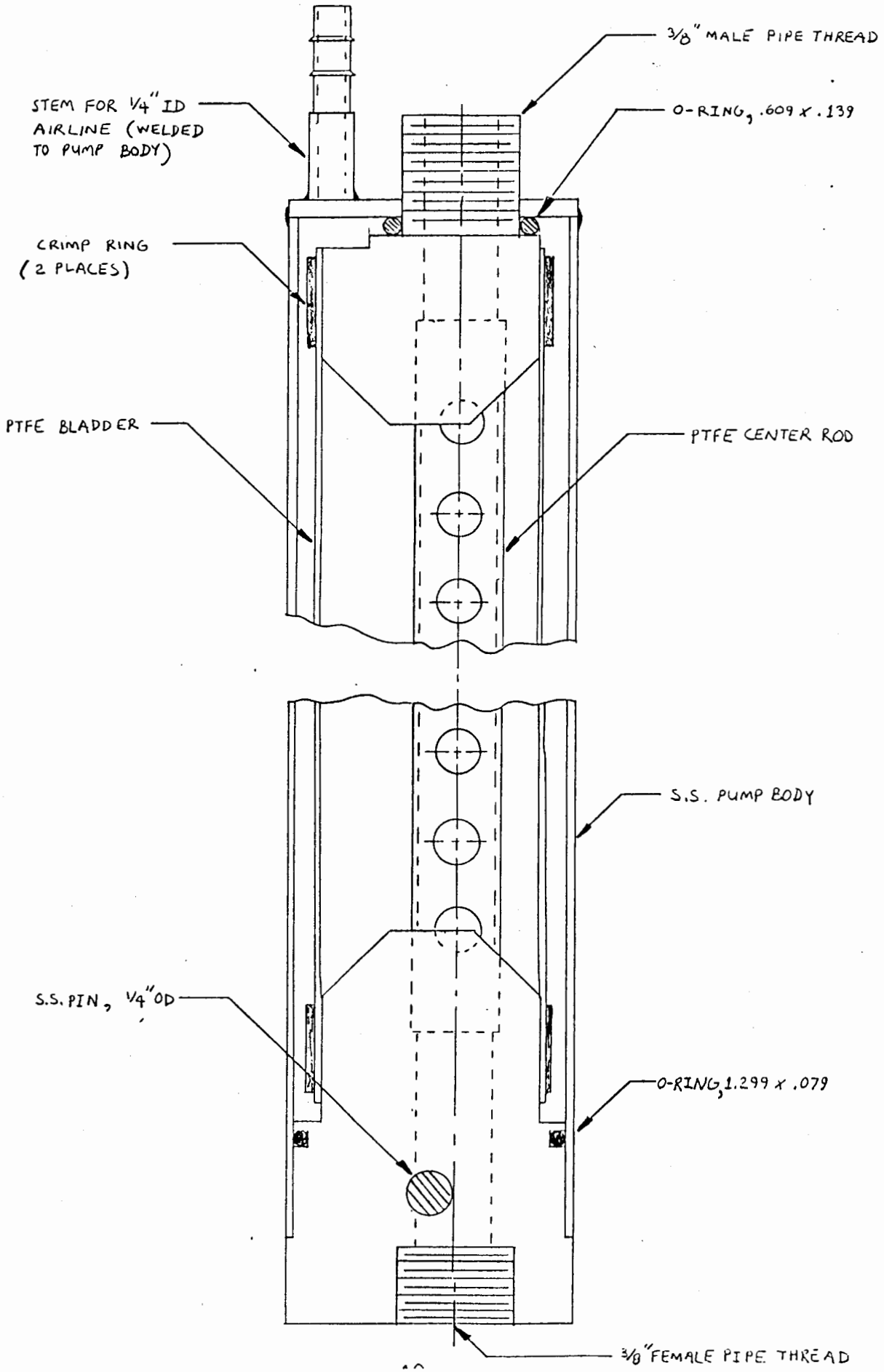

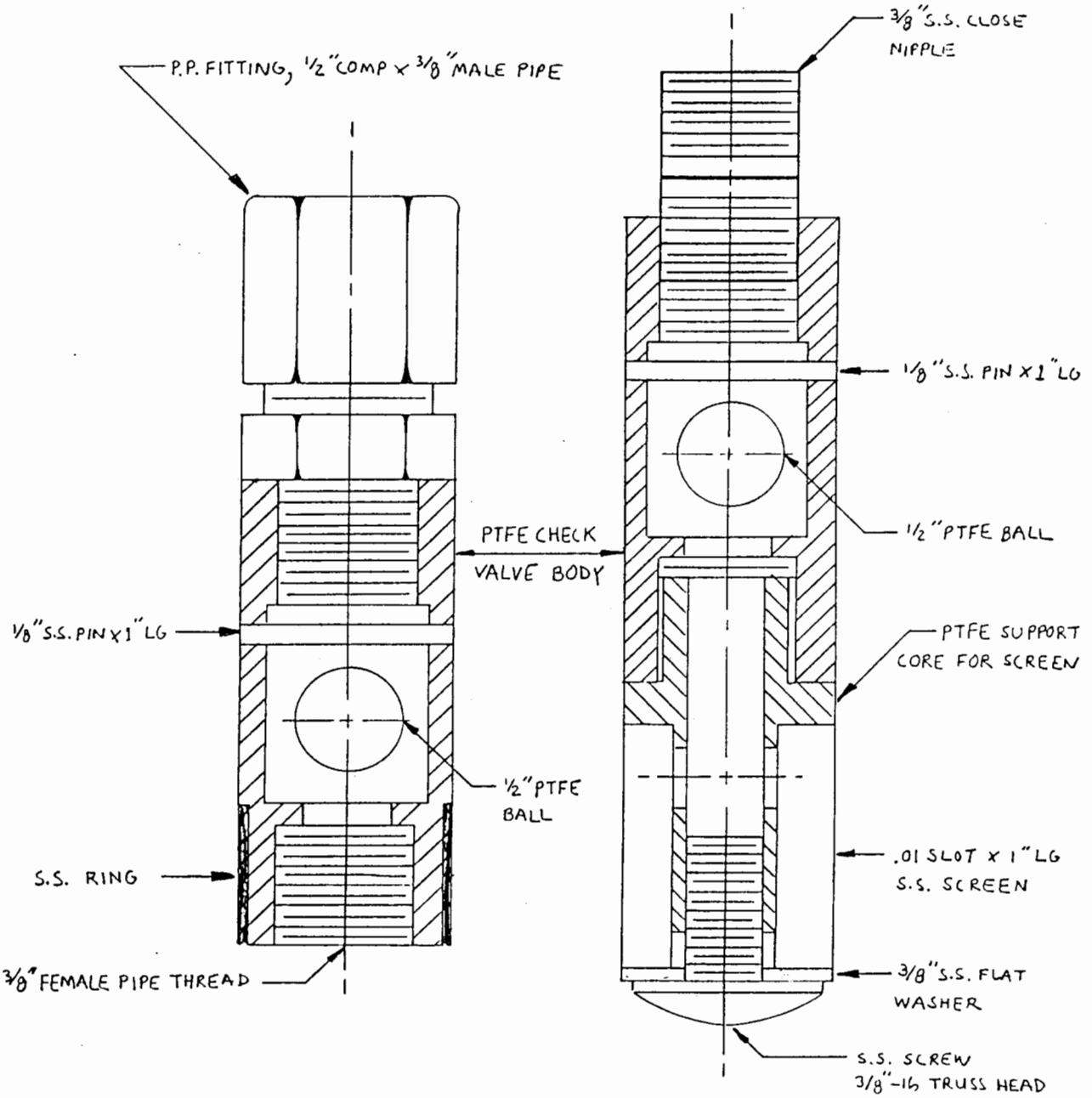

UPPER CHECK VALVE W/ FITTING

LOWER CHECK VALVE W/ SCREEN

Parts List

Model 5915 Bladder Pump

P/N	Description	Quantity Req'd
5226	S.S. Pin, 1/8" O.D.	2
5384	PTFE Center Rod	1
5587	PTFE Ball, 1/2" O.D.	2
5727	S.S. Hose Clamp	1
5844	Aluminum Crimp Ring	2
5882	PTFE Bladder Sleeve	1
5887	P.P. Compression Fitting	1
5921	S.S. Pump Body Tube	1
5922	PTFE Upper Bladder End	1
5923	PTFE Lower Bladder End	1
5924	PTFE Check Valve Body	1
5925	S.S. Pin, 1/4" O.D.	1
5928	PTFE Intake Support Core	1
5930	Viton O-ring, .609 x .139	1
5934	Viton O-ring, 1.299 x .079	1
5937	S.S. Screen, .01 slot x 1" Lg.	1
5938	S.S. Close Nipple, 3/8" Pipe	1
5948	PTFE Check Valve Body w/S.S. ring	1
S.E.	S.S. Screw, 3/8-16 Truss Head	1
S.E.	S.S. Flat Washer, 3/8" I.D.	1

ENGINEERING SPECIFICATIONS

GEOGUARD MODEL 5915 BLADDER PUMP

1. The pump shall have a major diameter of 1.66 inches to permit usage in 2 inch and larger monitoring wells.

2. The pump shall be a positive displacement bladder squeeze pump whereby the drive air does not contact the sample.

3. The pump shall be of construction that permits water to enter the interior of the bladder through a bottom check valve and which permits air to enter the annulus between the pump body through an upper air inlet/outlet.

4. The pump shall be of a design that does not fill by suction assist.

5. The pump shall be constructed from type 316 stainless steel outer body, with external Teflon check valves, Teflon internal parts, and incorporate only VITON seals.

6. The pump shall incorporate a field replaceable Teflon bladder cartridge.

7. The pump shall be capable of withstanding continuous operation at 150 psi with no modifications.

8. The pump shall be capable of lifting from 340 feet with no modification.

9. The pump shall be capable of dry pumping without damage.

10. The pump shall have a minimum water discharge outlet diameter of .375 inch to minimize the potential for outgassing of dissolved gases.

11. The pump shall be delivered pre-assembled and pre-cleaned such that it may be immediately installed.

12. The pump shall be capable at pumping continuously at 80 gph from a depth of 50 feet with 10 feet of submergence, when supplied with compressed gas at a rate of 2.75 cfm at 100 psi.

13. The pump shall be fully field serviceable without requiring <u>any</u> tools.

14. The pump shall utilize a heat bonded twin tubing arrangement.

15. The pump shall have its intake tapped to 3/8" female pipe thread to necessitate usage of an intake filter screen or drop tube probe.

16. The pump shall include a .010" continuous wrap type 316 S.S. screened intake.

Registered Trademarks of DuPont, Inc.

ONE ELIZABETH ST., P.O. BOX 300, MIDDLEPORT, N.Y. 14105-0300 (716) 735-3616

SIGMA

AMERICAN SIGMA

ONE ELIZABETH STREET • PO BOX 300
MIDDLEPORT, NEW YORK 14105-0300

August 14, 1990

Hart Crowser
1910 Fairview Avenue East
Seattle, WA 98102-3699

Attn: Phillip A. Spadoro

Dear Mr. Spadoro:

Thank you for your recent order for GEOGUARD Dedicated Ground Water Sampling Systems.

This is to verify that Hart Crowser has been issued an extended five (5) year warranty on all GEOGUARD downwell components. Additionally, all pumps have been warranted against corrosion for a period of ten (10) years.

We look forward to aiding in the initiation of your ground water monitoring program, as well as providing any long-term support required. As you know, our local representative Dick Gordon of KGS, will be assisting with your system installation in the near future. If at any time we may be of service from the factory, please feel free to call our toll free number.

Sincerely,

AMERICAN SIGMA, INC.

Deborah L. Beach

Deborah L. Beach
GEOGUARD Inside Sales Manager

DLB/smv

cc: Area Representative

KGS & Associates
P.O. Box 1249
Mercer Island, WA 98040
(206) 236-2339

800-635-4567 • 716-735-3616
FAX: 716-735-3711 • TELEX: 750101

Port of Tacoma
June 3, 1994

ATTACHMENT A-2
COMPRESSOR OPERATIONS AND MAINTENANCE MANUAL

OPERATING AND MAINTENANCE MANUAL
GEOGUARD ENGINE DRIVEN COMPRESSOR

Manufacturer and Source of Replacement Parts:

AMERICAN SIGMA, INC.

One Elizabeth Street

P.O. Box 300

Middleport, NY 14105

(716) 735-3616 or (800) 635-4567

Telex 750101 - Fax (716) 735-3711

August 1, 1989

CONTENTS

Compressor Instructions	Page 1, 2
Model 5401 Compressor/Cart	3
Model 5420 Compressor/Cart	4, 5
Compressor Blow-Up Drawing	6
Compressor Maintenance Instructions	7
Warranty Information	8

Loosely contained: Briggs & Stratton operating and maintenance instructions.

The GEOGUARD engine driven compressor assembly provides a portable means of supplying the drive air required for a Gas-Drive Pump, Two-Stage Pump, or Bladder Pump.

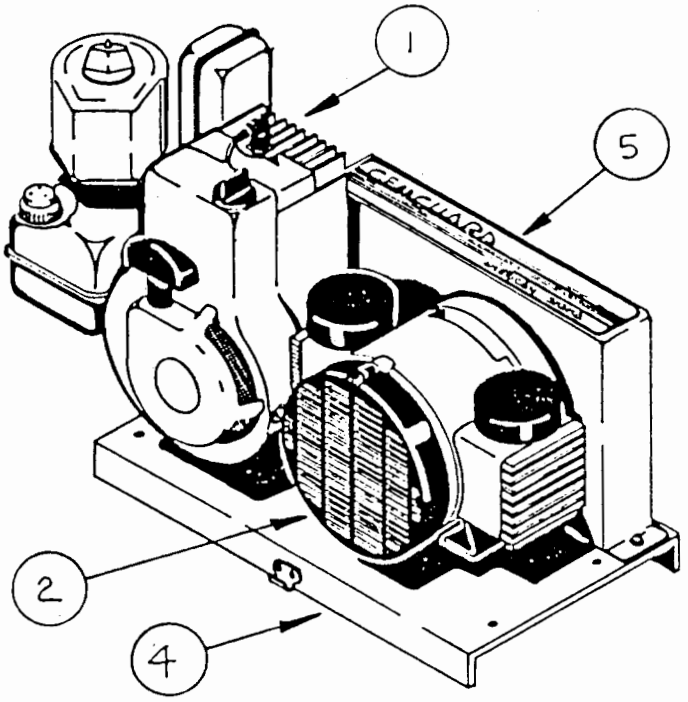

The completed assembly consists of the following:

1) 3 HP Briggs & Stratton I/C gasoline engine with 4" drive sheave.

2) 125 psi oilless twin cylinder compressor (reciprocating piston type) with 6" drive sheave.

3) Drive belt (not shown)

4) Rugged mounting base.

5) OSHA approved belt guard.

Safety Precautions

1) Never operate with out the belt guard in place.

2) Keep crankcase filled with oil.

3) Keep adequate tension on drive belt.

4) Allow a hot engine to cool 5 or 10 minutes before attempting to fill with gasoline.

5) Never attempt to start engine under load (with an airline connected to "nipple" at compressor head).

Starting Instructions

1) Make sure that the throttle lever (located above and to the left of the fuel tank) is pulled out fully.

2) Set the upper control lever to the "choke" position.

3) Set the lower control lever to the "on" position.

4) Pull the rope starter cord to start the engine.

5) As engine begins to run, set the upper control lever to the "run" position.

Maintenance

To obtain the best possible results with your engine driven compressor assembly, a preventative maintenance program must be followed.

1) Keep crankcase filled and change oil periodically.

2) Periodically adjust the engine to keep proper belt tension.

3) Periodically check the condition of the sheaves on the engine and compressor pump.

Refer to the maintenance instructions for additional information.

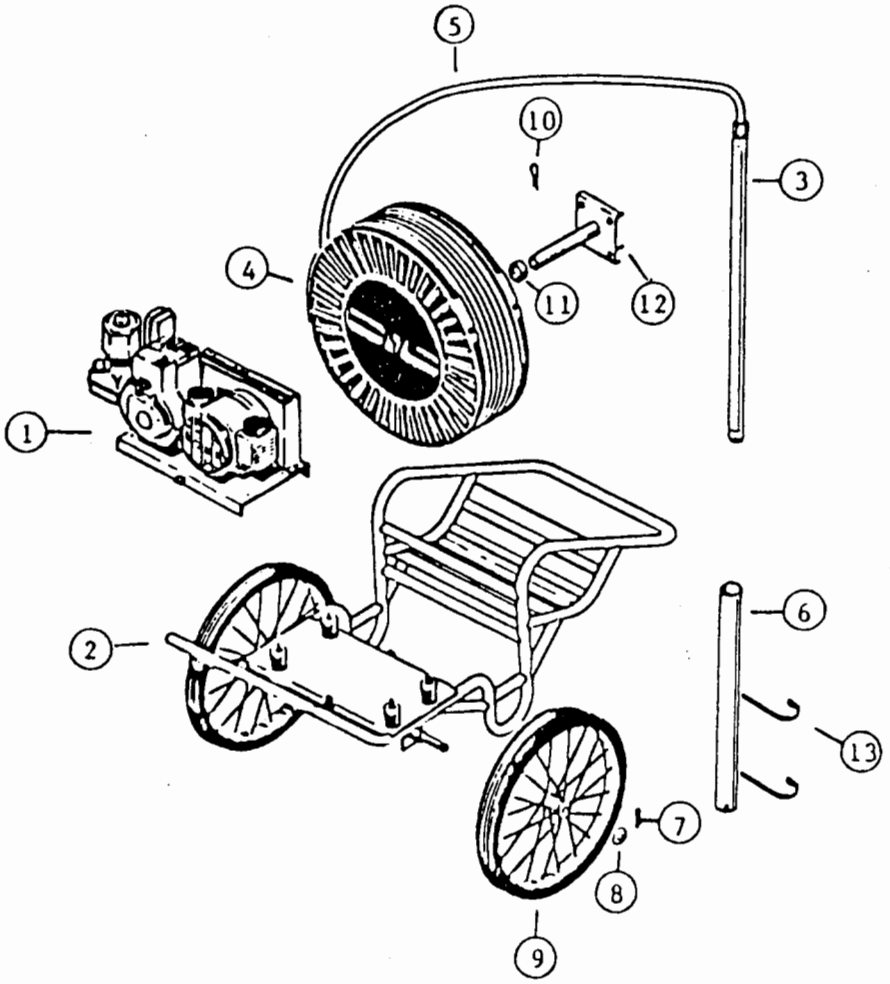

Model 5401 Compressor/Cart Assembly

	Part No.	Description
1	5404	Compressor Assembly: 3 HP. Briggs I/C Engine w/ Industrial Oil-less Compressor
2	5410	Cart Assembly: Tubular Aluminum
3	Opt'l	Bladder Pump or Gas-Drive Pump
4	5406	Tubing Spool
5	Opt'l	Coaxial Tubing Assembly
6	5539	Pump Scabbard
7	5409	Retainer Clip
8	5577	Washer
9	5419	20" Semi-Pneumatic Spoked Wheel
10	5411	Retainer Clip
11	5578	Spacer
12	5416	Spool Spindle
13	5579	Clamp

ONE ELIZABETH ST., P.O. BOX 100, MIDDLEPORT, N.Y. 14105-0100 (716) 735-3616

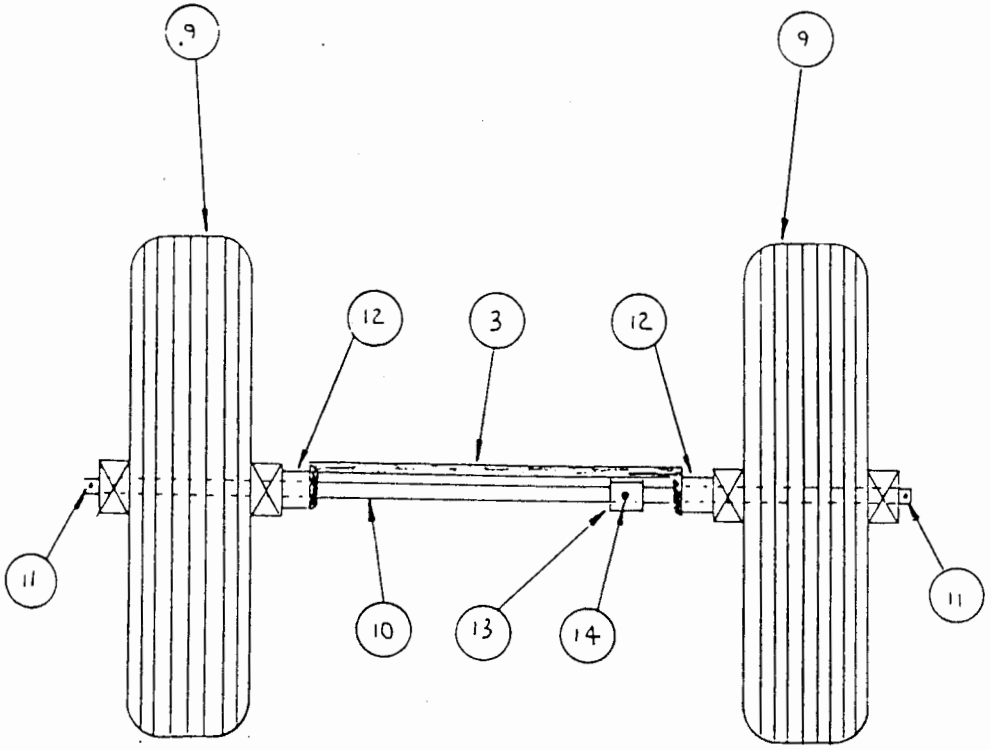

WHEEL/AXLE ASSY

SYM	DATE	DESCRIPTION	ECN NO	DR	CK

ITEM	QTY	DESCRIPTION	P/N
1	1	3HP GAS ENGINE	5182
2	1	OILLESS COMPRESSOR	5181
3	1	MOUNTING BASE	5534
4	1	BELT GUARD	5583
5	1	V-BELT	5514
6	1	BRACKET	5632
7	1	HANDLE	5631
8	1	CONTROLLER BRKT	5633
9	2	16" TIRES	5738
10	1	AXLE	5739
11	2	PIN	5409
12	2	BUSHING	S.E.
13	1	STABILIZER	S.E.
14	1	PIN	5411

(NOT SHOWN)

MATERIAL:

REMOVE ALL BURRS

AMERICAN SIGMA

ONE ELIZABETH ST., MIDDLEPORT N.Y., 14105 [716] 735-3616

TOLERANCES (Unless Noted)	Decimal	Angular	Fractional
Model			
Description: 5420 COMPRESSOR/CART			Dwg: 1 OF 2
Drawn By: JM	Scale	Date: 1/4/88	Rev	Part NO: 5420
Approved				

ENGINEERING SERVICE COMPANY 503 964

5420 COMPRESSOR
(DWG 2 of 2)

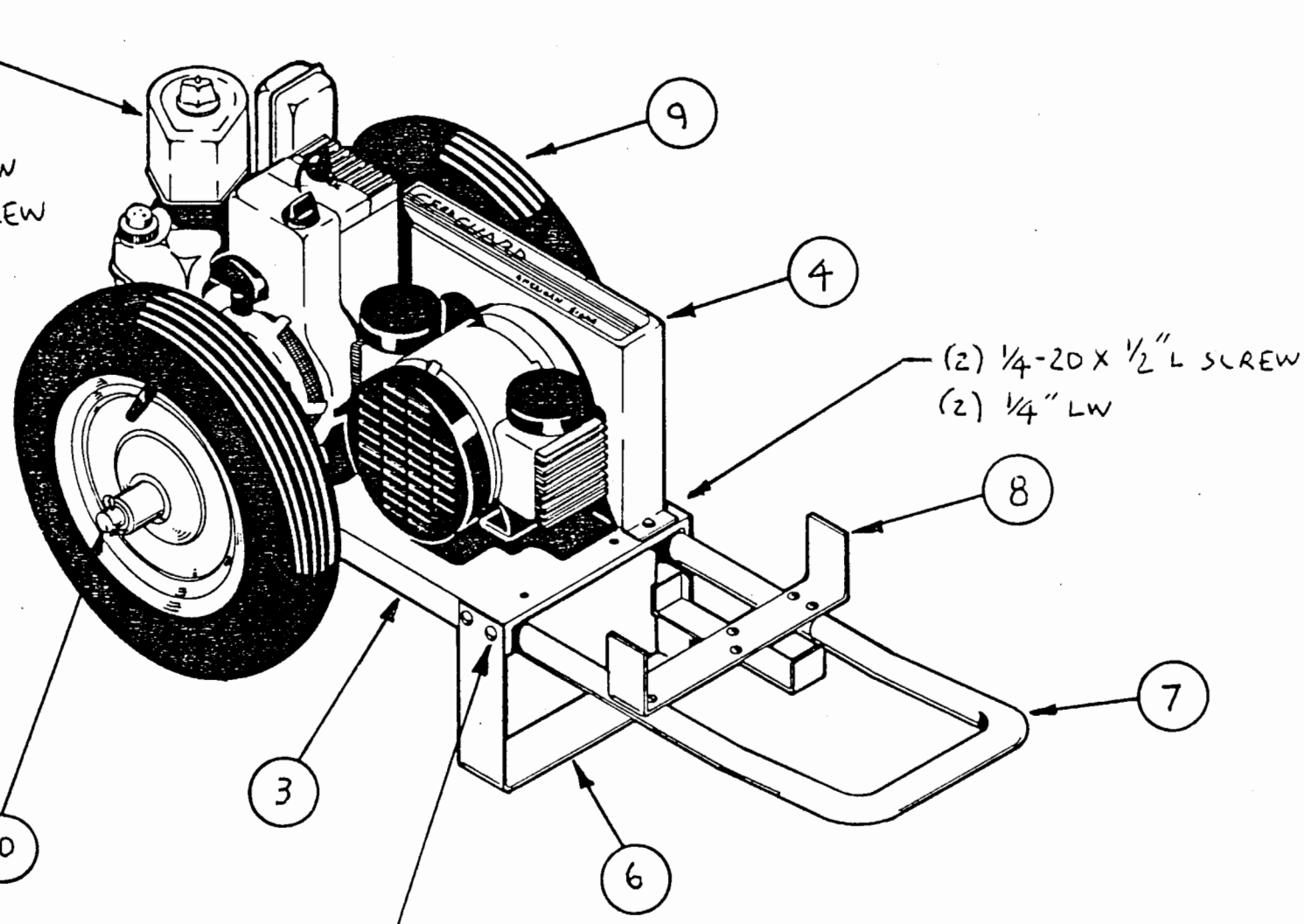

MOUNTING HARDWARE FOR ITEM 1

(8) 5/16" FW
(4) 5/16-18 x 1 3/4" L SCREW
(4) 5/16-18 HEX NUT w/ NYLON INSERT

(2) 1/4-20 x 1/2" L SCREW
(2) 1/4" LW

(4) 1/4-20 x 1 3/4" L SCREW
(4) 1/4" FW
(4) 1/4-20 HEX NUT w/ NYLON INSERT

Blow Up Drawing: Oil-less Compressor Pump

Manufacturer: Gast Corporation

AMERICAN SIGMA P/N 5181

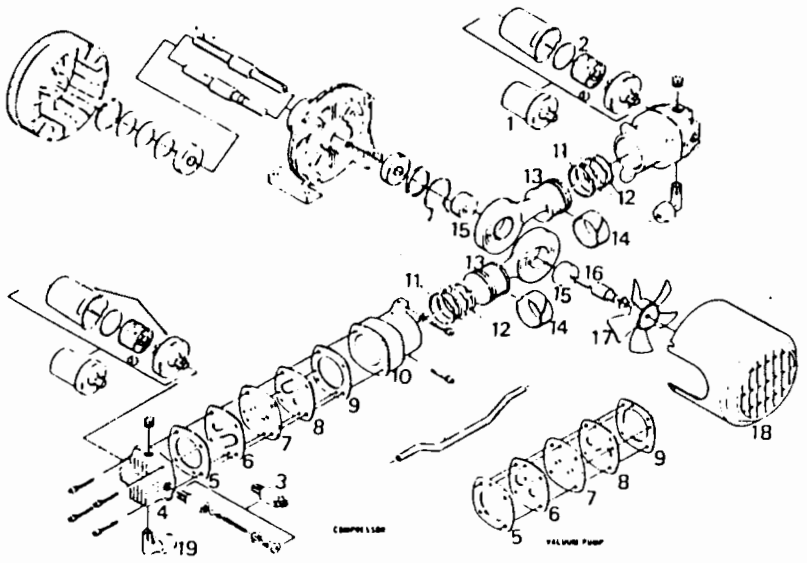

If you are unable to return you Gast unit to an authorized service center, you may want to keep one or two service kits on hand. These service kits contain all parts which should be replaced when servicing your Gast unit, such as piston rings, seals, gaskets and the inlet and outlet valves.

•Indicates parts included in SERVICE KIT.

Ref. No	Description	Part Only.	VBB	VCD	PBB	PCD
1	Filter Assembly	2	B300A	B300A	B300A	B300A
• 2	Felt	2	B344A	B344A	B344A	B344A
3	Safety Valve	1			AF570S	AF570S
4	Cylinder Head	2	AF508	AF507	AF508	AF507
• 5	Head Gasket	2	AF518	AF520A	AF518	AF520A
• 6	Outlet, Valve	2	AF531	AF545	AF531	AF545
7	Valve Plate	2	AF529	AF543	AF529	AF543
• 8	Inlet, Valve	2	AF530	AF544	AF530	AF544
• 9	Cylinder Gasket	2	AF519	AF521	AF519	AF521
10	Cylinder	2	AF510	AF509	AF510	AF509
•11	Piston Ring	4	AF527	AF541	AF527	AF541
•12	Piston Seal	4	AF526	AF540	AF526	AF540
13	Piston Rod Assembly	2	AF560B	AF561D	AF560B	AF561D
•14	Rider Ring	2	AF594	AF595	AF594	AF595
15	Eccentric	2	AF513B	AF515D	AF513B	AF515D
16	Key	1	AF524	AB136D	AF524	AB136D
17	Fan	1	AF533	AF547	AF533	AF547
18	Shroud	1	AF535	AF549	AF535	AF549
•19	Manifold Sleeve	2	AF567A	AF567A	AF567A	AF567A
	Service Kit	1	K260	K263	K260	K263

OPERATING and MAINTENANCE INSTRUCTIONS

CAUTION: Never lubricate this dry oil-less piston pump. The Telfon filled rings are self-lubricating and require no oil. The motor bearings are grease packed for the life of the bearing.

INSTALLATION: If this compressor is being installed in a system where it will be periodically required to start against any form of system back pressure, a positive sealing one way check valve should be installed in the air line between the system and the compressor.
Check valves are provided as standard equipment on all Gast tank mounted compressor assemblies.

DISASSEMBLY: It is not necessary to remove the filters from the cylinder head as metal chips could be dislodged and enter the unit. Remove the shroud, cylinder head, and valve components. Do not re-arrange the valve components. Remove the cylinder and rings. Make sure all parts are clean befor re-assembling. DO NOT use any chlorinated solvents to clean valves, or any liquids to flush units. THE STAINLESS STEEL VALVES MAY BE CLEANED WITH WATER. All parts, except the valves, can be cleaned with any industrial, non-flammable, non-toxic, cleaning solvent.

ELECTRICAL: Remove the plate covering the electrical terminal for wiring instructions.

WARNING – THE MOTOR MAY BE THERMALLY PROTECTED AND CAN AUTOMATICALLY RESTART WHEN THE PROTECTOR RESETS. *ALWAYS* DISCONNECT POWER SOURCE BEFORE SERVICING.

ASSEMBLY: Install piston seals, piston rings, and rider rings on the piston. Locate ring joints approximately opposite each other. Attach cylinder to bracket with the cylinder screws and lock washers. Tighten screws finger tight. Move pistons to top dead center position. Adjust each cylinder flush with top of piston and torque cylinder screws to 150–160 lb. in. Re-torque second time. Stack the valve components in order as shown in the detail. The valve leaf is pre-bent and should not be adjusted in any way. Install the cylinder head, lock washers, and head screws. The exhaust ports in the cylinder head have been marked by omitting the ends of two of the fins. Do not tighten head screws at this time. Install manifold nuts and seals on the manifold and assemble into the other cylinder head and manifold. Torque all head screws to 110-120 in.-lbs. Re-torque again. Position manifold and tighten manifold nut ½ to ¾ turns beyond hand tight.

INSPECTION: If pump or motor shows evidence of overheating or excessive noise, stop immediately for repairs.

Regular inspection may prevent expensive repairs. The rider thickness can be an indication of when rings need replacing. If a rider ring measures. .055" or less in thickness, a change of all rings should be made. For a unit operated at sea level in fairly clean air at an ambient of 65–75° F., relative humidity of approximately 35%, and at maximum advertised duties, it is suggested that 4,000 hours of operation be used as an initial inspection point. As operating conditions on your particular application improve or worsen, your own experience can be used to determine whether this 4,000 hour figure can be lengthened or should be shortened.

IF YOUR PUMP IS EQUIPPED WITH PLASTIC PLUGS IN THE EXHAUST AND/OR INTAKE PORTS, REMOVE BEFORE STARTING THE UNIT.

DANGER: To prevent explosive hazard, DO NOT pump combustible liquids or vapors with these units. Personal injury and/or property damage would result.

It is usually quickest and least expensive to send the motor in for repair. Authorized service facilities are located at:

Gast Manufacturing Co., Ltd.
Halifax Road, Cressex Estate
High Wycombe, Bucks HP12 3SN
England
High Wycombe 23571

Brenner-Fiedler & Assoc.
13824 Bentley Place
Cerritos, CA 90701
213/404-2721

Gast Manufacturing Corp.
2550 Meadowbrook Road
Benton Harbor MI 49022
616/926-6171

Wainbee, Ltd.
121 City View Drive
Rexdale, Ontario, Canada M9W 5A9
416/243-1900

Gast Manufacturing Corp.
505 Washington Ave.
Carlstadt NJ 07072
201/933-8484

Wainbee, LTD.
215 Brunswick Blvd.
Pointe Claire, Montreal,
Canada H9R 4R7
514/697-8810

WARRANTY

Each **AMERICAN SIGMA GEOGUARD** groundwater sampling product is warranted by AMERICAN SIGMA, INC. to be free from defects in material and workmanship according to the following schedule:

Well Dedicated Components (including Two-Stage pumps, bladder pumps, purge pumps, intake screens, packers, tubing, well closures and associated fittings) will be warranted for a period of two years from the date of shipment.

Portable Components will be warranted for a period of one year from date of shipment.

This warranty is the sole and exclusive warranty as regards to the product sold to you by AMERICAN SIGMA, INC. and there are no other warranties, expressed or implied; AMERICAN SIGMA, INC. specifically disclaiming any such warranty. No representative or agent of AMERICAN SIGMA, INC. except a corporate officer, is authorized to modify, enlarge or extend the above warranty and only a written instrument signed by a corporate officer specifically shall be effective to modify, enlarge or extend the same.

The goods are sold and accepted with the understanding and agreement that AMERICAN SIGMA, INC.'s liability is limited to the price of the unit sold.

For repair assistance call the AMERICAN SIGMA GEOGUARD product service center.

Phone: 1-800-635-4567 (within New York State; call: 716-735-3616).

Operating and Maintenance Instructions

Model Series 80200 to 82200

BRIGGS & STRATTON

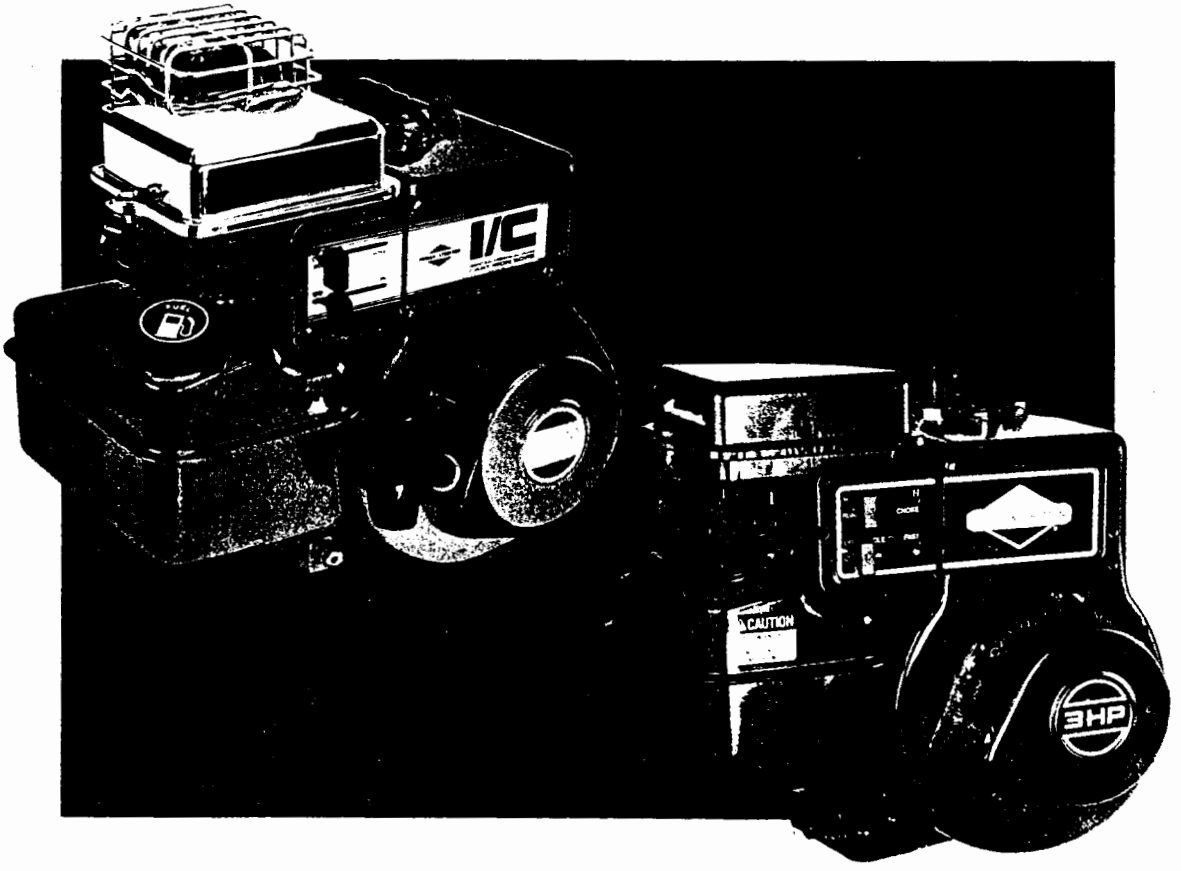

Briggs & Stratton Corporation
Milwaukee, Wisconsin 53201

FORM NO. 271977-10/86
PRINTED IN U.S.A.

⚠ IN THE INTEREST OF SAFETY ⚠

WARNING: DO NOT RUN THE ENGINE IN AN ENCLOSED AREA. Exhaust gases contain carbon monoxide, an odorless and deadly poison.

A FIRE OR EXPLOSION CAN OCCUR RESULTING IN PERSONAL INJURY IF THE FOLLOWING INSTRUCTIONS ARE NOT FOLLOWED:

1. DO NOT FILL GASOLINE TANK while engine is running. Allow engine to cool for two minutes before refueling.
2. Do not operate the engine when an odor of gasoline is present or other explosive conditions exist.
3. If gasoline is spilled, move machine away from the area of the spill and avoid creating any source of ignition until the gasoline has evaporated.
4. DO NOT STORE, SPILL OR USE GASOLINE NEAR AN OPEN FLAME, or devices such as a stove, furnace, water heater which utilize a pilot light, or devices which can create a spark.
5. Refuel outdoors preferably, or only in well ventilated areas.
6. DO NOT OPERATE ENGINE WITHOUT A MUFFLER. Inspect muffler periodically and replace, if necessary.
7. Periodically clean the muffler area to prevent grass, dirt and combustible material from accumulating.
8. DO NOT use this engine on any forest covered, brush covered or grass covered unimproved land unless a spark arrester is attached to the muffler.
9. DO NOT operate the engine if air cleaner or cover directly over the carburetor air intake is removed.
10. DO NOT choke carburetor to stop the engine.

CAUTION: DO NOT RUN ENGINE AT EXCESSIVE SPEEDS. Operating an engine at excessive speeds increases the danger of personal injury.

1. DO NOT TAMPER WITH GOVERNOR SPRINGS, GOVERNOR LINKS OR OTHER PARTS WHICH MAY INCREASE THE GOVERNED ENGINE SPEED.
2. A.N.S.I. Standard Safety Specifications for rotary power lawn mowers specify a maximum blade tip speed of 19,000 feet per minute (96.5 meters per second), primarily to reduce the danger from thrown objects.
3. Do not tamper with the engine speed selected by the original equipment manufacturer.
4. DO NOT TOUCH hot mufflers, cylinders or fins as contact may cause burns.
5. Dirt and grass clippings or other debris, in cooling fins or governor parts can affect engine speed. See cleaning instructions in MAINTENANCE section.
6. TO PREVENT HAND OR ARM INJURY, always pull starter cord rapidly to avoid kickback; starting engine with a loose blade or without a blade may cause a severe kickback.
7. ALWAYS KEEP HANDS AND FEET CLEAR OF MOVING OR ROTATING PARTS.
8. TO PREVENT ACCIDENTAL STARTING when servicing the engine or equipment, always remove the spark plug or wire from the spark plug and insert in holding tab shown on page 3.

WHEN WORKING ON EQUIPMENT

DO NOT STRIKE FLYWHEEL with a hard object or metal tool as this may cause flywheel to shatter in operation, causing personal injury or property damage. To remove flywheel, use Briggs & Stratton approved tools only.

IN THE INTEREST OF ENVIRONMENT

A muffler which leaks because of rust or damage can permit an increased exhaust noise level. Therefore, examine the muffler periodically to be sure it is functioning effectively. To purchase a new muffler, see SERVICE AND REPAIR INFORMATION.

CAUTION: If this engine is not equipped with a spark arrester and is to be used on any forest covered, brush covered, or grass covered unimproved land, before using on such land a spark arrester must be added to the muffler. The arrester must be maintained in effective working order by the operator. In the State of California the above is required by law (Section 4442 of the California Public Resources Code). Other states may have similar laws. Federal laws apply on federal lands. See your Authorized Briggs & Stratton Service Center for spark arrester muffler options.

⚠ THIS SYMBOL MEANS **WARNING** or **CAUTION**. PERSONAL INJURY AND/OR PROPERTY DAMAGE MAY OCCUR UNLESS INSTRUCTIONS ARE FOLLOWED CAREFULLY.

SERVICE & REPAIR INFORMATION

If service or repair is needed, contact an Authorized Briggs & Stratton Service Center. To serve you promptly and efficiently, the Service Center will need the model, type and code number on your engine.

Each Authorized Service Center carries a stock of original Briggs & Stratton repair parts and is equipped with special service tools. Trained mechanics assure expert repair service on all Briggs & Stratton engines.

Major engine repairs should not be attempted unless you have the proper tools and a thorough knowledge of internal combustion engine repair procedure.

Your nearest service center is listed in the "Yellow Pages" under "Engines, Gasoline" or "Gasoline Engines". He is one of over 25,000 authorized dealers available to serve you.

This illustrated book includes "Theories of Operation", common specifications and detailed information covering the adjustment, tune-up and repair procedures for 2 through 16 H.P. single cylinder, 4 cycle models. It is available from any Authorized Briggs & Stratton Service Center. Order as Part Number 270962.

GENERAL INFORMATION

This engine is a single-cylinder L-head, air-cooled type.

MODEL SERIES 80200 and 82200

Bore ..... 2-3/8" (60.33 mm)
Stroke ..... 1-3/4" (44.45 mm)
Displacement ..... 7.75 cu. in. (127.0 cc)
Horsepower Max. ..... 3.0 @ 3600 RPM
Torque (Ft.-Lbs.) Max. ..... 4.6 @ 3100 RPM

The horsepower rating listed is established in accordance with the Society of Automotive Engineers Test Code-J607. For practical operation, the horsepower loading should not exceed 85% of this rating. Engine power will decrease 3-1/2% for each 1,000 feet (304.8 m) above sea level and 1% for each 10° above 60°F (16°C).

In some areas, local law requires the use of a resistor spark plug so as to suppress ignition signals. If an engine was originally equipped with a resistor spark plug, be sure to use the same type of spark plug for replacement.

TUNE-UP SPECIFICATIONS

Spark Plug Type	Champion	Autolite
Short Plug	CJ-8	235
Long Plug	J-8C	295
Resistor Short Plug	RCJ-8	245
Resistor Long Plug	RJ-8C	306

Spark Plug Gap ..... .030" (.76 mm)
Intake Valve
Clearance ..... .005"-.007" (.13-.18 mm)
Exhaust Valve
Clearance ..... .009"-.011" (.23-.28 mm)

STORAGE INSTRUCTIONS

Engines to be stored over 30 days should be completely drained of fuel to prevent gum deposits forming on essential carburetor parts, fuel filter and tank.

NOTE: The use of a fuel additive, such as STA-BIL®, or an equivalent, will minimize the formation of fuel gum deposits during storage. Such an additive may be added to the gasoline in the fuel tank of the engine, or to the gasoline in a storage container.

a. All fuel should be removed from the tank. Run the engine until it stops from lack of fuel.

b. While engine is still warm, drain oil from crankcase. Refill with fresh oil.

c. Remove spark plug, pour approximately 1/2 ounce (15 cc) of engine oil into cylinder and crank slowly to distribute oil. Replace spark plug.

d. Clean dirt and chaff from cylinder, cylinder head fins, blower housing, rotating screen and muffler areas.

e. Store in a clean and dry area.

BRIGGS & STRATTON ENGINES ARE MADE UNDER ONE OR MORE OF THE FOLLOWING PATENTS:
2,999,491 3,305,223 3,526,146 3,625,492 3,745,393 3,971,353 4,233,043
3,194,224 3,457,804 3,572,218 3,650,354 3,961,724 4,168,288 4,270,509
3,276,439 3,465,740 3,625,071 3,738,345 3,968,854 4,189,040

DESIGN
D-247,177
OTHER PATENTS PENDING

BEFORE STARTING

READ THE OPERATING INSTRUCTIONS OF THE EQUIPMENT THIS ENGINE POWERS

OIL RECOMMENDATIONS

Note: Engine is shipped WITHOUT oil.

Use a high quality detergent oil classified "For Service SF, SE, SD or SC." Detergent oils keep the engine cleaner and retard the formation of gum and varnish deposits. No special additives should be used with recommended oils.

RECOMMENDED SAE VISCOSITY GRADES

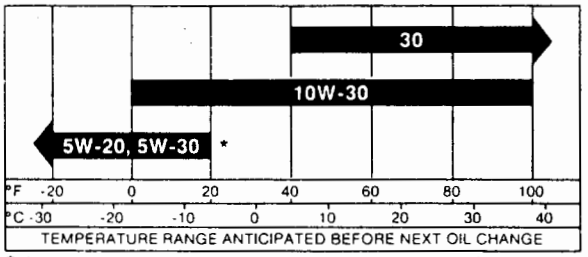

* If not available, a synthetic oil may be used having 5W-20, 5W-30 or 5W-40 viscosity.

NOTE: 10W-40 oil may be used if 10W-30 is not available.

TO FILL CRANKCASE WITH OIL

Place engine level. Clean area around oil fill before removing oil fill plug or oil-minder.

OIL FILL PLUG. Remove oil fill plug or (optional) oil-minder. Fill crankcase to point of overflowing. POUR SLOWLY. Capacity approximately 1-1/4 pints (0.6 liters). Replace oil fill plug or oil-minder.

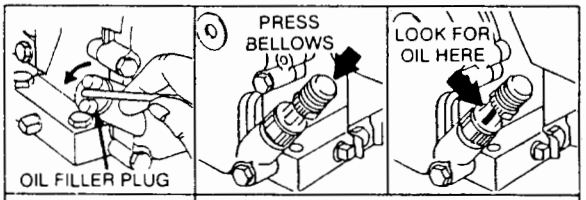

EXTENDED OIL FILL (Optional). Remove cap and dipstick. **FILL TO FULL MARK** on dipstick, POUR SLOWLY. Capacity approximately 1-1/4 pints (0.6 liters). When checking oil level, screw dipstick assembly firmly but slowly until cap bottoms on tube. **DO NOT OVERFILL.** Dipstick assembly must be securely assembled to tube at all times when engine is operating.

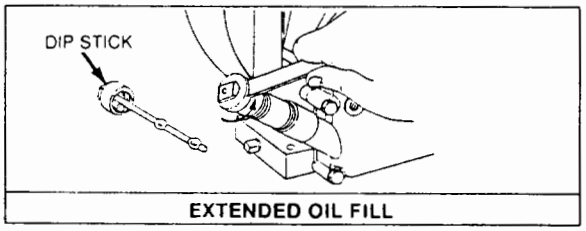

FUEL RECOMMENDATIONS

Our engines will operate satisfactorily on any gasoline intended for automotive use. DO NOT MIX OIL WITH GASOLINE.

We recommend the use of clean, fresh, lead-free gasoline. Leaded gasoline may be used if lead-free is not available. A minimum of 77 octane is recommended. The use of lead-free gasoline results in fewer combustion deposits and longer valve life.

NOTE: We DO NOT recommend the use of gasoline which contains alcohol, such as gasohol. However, if gasoline with alcohol is used, it MUST NOT contain more than 10 percent Ethanol and MUST be removed from the engine during storage. DO NOT use gasoline containing Methanol. See STORAGE INSTRUCTIONS.

⚠ **DO NOT** fill fuel tank to point of overflowing. Provide approximately 1/4" of tank space for fuel expansion.

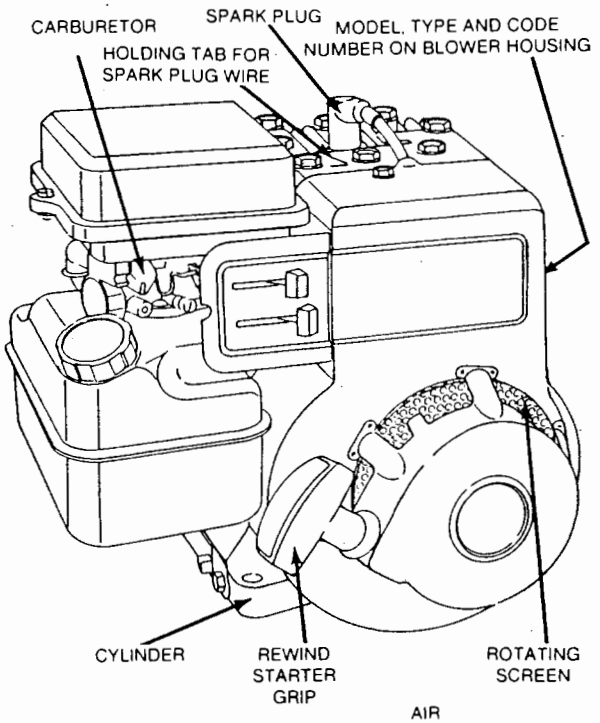

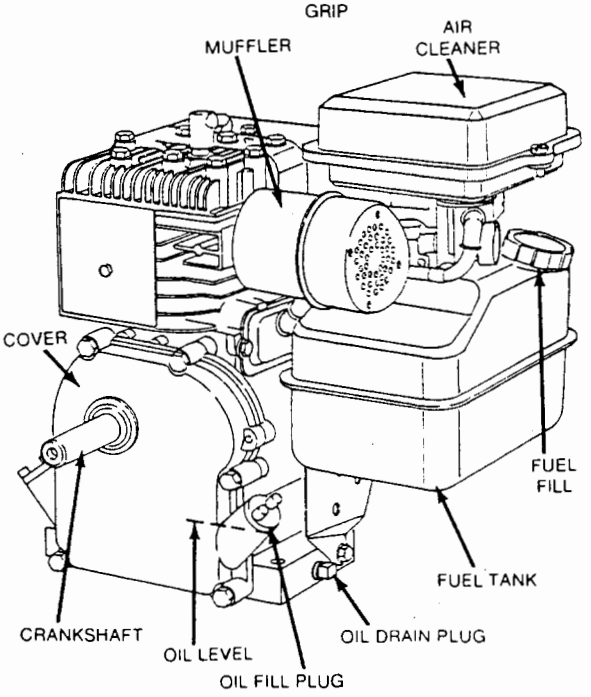

FORM NO. 271977-10/86
PRINTED IN U.S.A.

STARTING

Start, store and fuel engine in a level position.

DO NOT use a pressurized starting fluid as severe internal engine damage may occur due to loss of lubrication.

CHOKE ENGINE:

Engine may be equipped with either manual, remote or choke-a-matic controls.

MANUAL CHOKE: Move lever as illustrated.

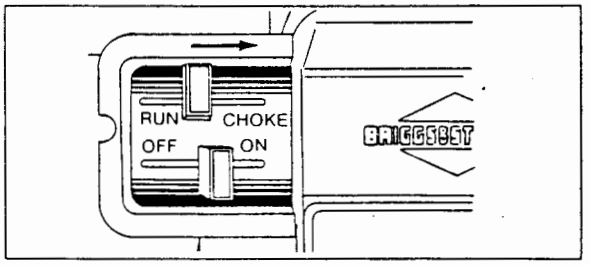

CHOKE-A-MATIC CONTROLS: Move controls as far as possible toward "CHOKE" or "START".

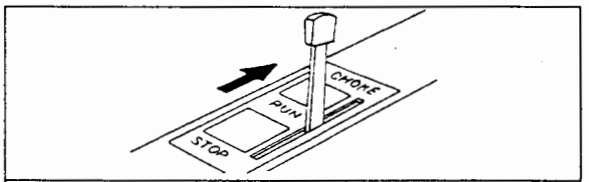

TYPICAL CONTROL

STOP SWITCH: Move STOP lever TO "ON" position as illustrated, if so equipped.

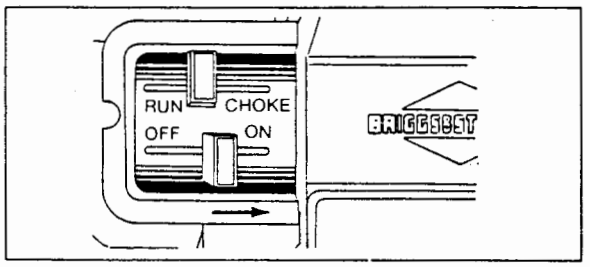

NOTE: A warm engine requires less choking than a cold engine.

NOTE: Engine may not start if controls on powered equipment do not close choke fully. See ADJUSTMENT section.

SPEED CONTROL LEVER: Move speed control lever to "RUN," "FAST" or "START" position if so equipped.

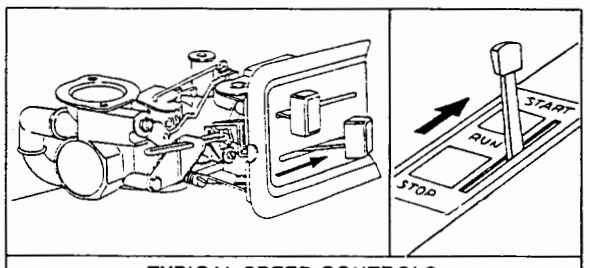

TYPICAL SPEED CONTROLS

TO START ENGINE

⚠ ALWAYS KEEP HANDS AND FEET CLEAR OF MOWER BLADE OR OTHER ROTATING MACHINERY.

Rewind Starter. Grasp starter grip as illustrated and pull slowly until starter engages. Then pull cord rapidly to overcome compression, prevent kickback and start engine. Repeat if necessary with choke opened slightly. When engine starts, open choke gradually.

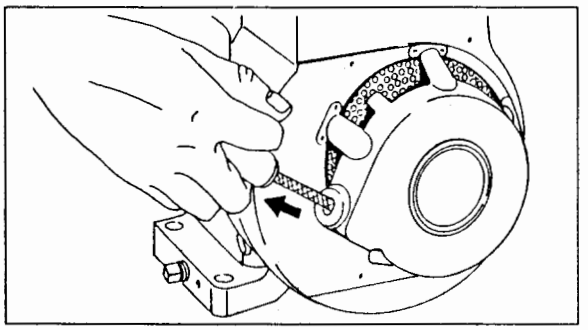

Rope Starter. Wind the starter rope around the pulley in direction shown by arrow. Pull the rope with a quick full arm stroke to overcome compression and prevent kickback. Repeat if necessary with choke opened slightly. When engine starts open choke gradually.

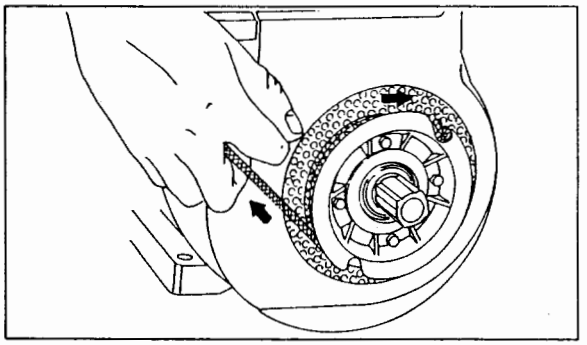

⚠ **CAUTION:** When using rope starter to crank engine, use caution so knotted end of rope does not strike persons standing nearby.

TO STOP ENGINE

Move control to slow, then "STOP" or "OFF" position. Do not choke the carburetor to stop engine.

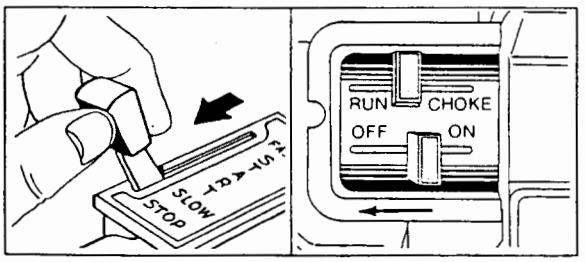

MAINTENANCE

CAUTION: TO PREVENT ACCIDENTAL STARTING when servicing the engine or equipment, always remove the spark plug or wire from the spark plug and insert in holding tab shown on page 3.

CHECK OIL LEVEL regularly -- after each five hours of operation. BE SURE OIL LEVEL IS MAINTAINED.

CHANGE OIL after first five hours of operation. Thereafter change engine oil every 50 hours of operation, under normal operating conditions. Change engine oil every 25 hours of operation if the engine is operated under heavy load, or in high ambient temperatures. Remove oil drain plug and drain oil while engine is warm. Replace drain plug. Remove oil fill plug, oil-minder, or cap and dipstick and refill with new oil of proper grade. Replace oil fill plug, oil-minder or cap and dipstick.

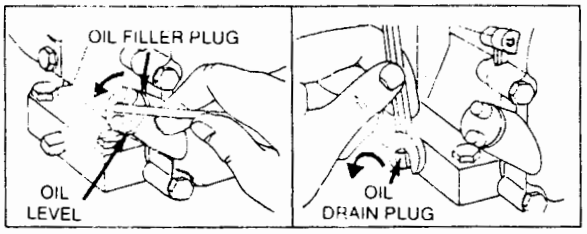

CHANGE OIL (GEAR REDUCTION optional). Remove oil level plug and oil fill plug. Drain oil every 100 hours of operation. To refill, pour 10W-30 oil into filler hole until it runs out level check hole. Replace both plugs. Oil fill plug has a vent hole and must be installed on top of gear case cover.

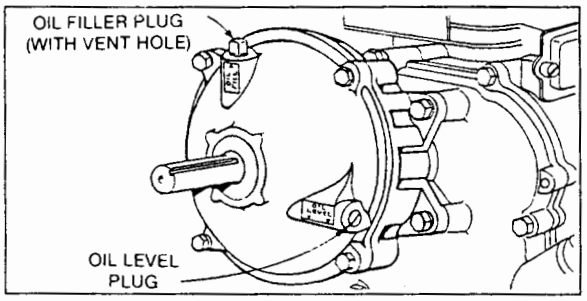

TO SERVICE AIR CLEANER

Clean cartridge at three month intervals or every 25 hours, whichever occurs first.

NOTE: Service more often under dusty conditions.

CARTRIDGE AIR CLEANER

1. Loosen screws and tilt cover as illustrated.
2. Carefully remove pre-cleaner (when so equipped) and cartridge.
3. Clean by tapping gently on a flat surface. If very dirty, replace cartridge and pre-cleaner or clean as follows:

   a. Wash in a low or non-sudsing detergent and warm water solution. **CAUTION:** Do not use petroleum solvents such as kerosene, to clean cartridge.

   b. Rinse thoroughly with flowing water from inside out until water is clear.

   c. Allow cartridge and pre-cleaner (when so equipped) to stand and air dry thoroughly before using. DO NOT OIL CARTRIDGE OR PRE-CLEANER (WHEN SO EQUIPPED). DO NOT USE PRESSURIZED AIR TO CLEAN OR DRY CARTRIDGE.

4. Install cartridge, and pre-cleaner (when so equipped) then close cover and fasten screws securely.

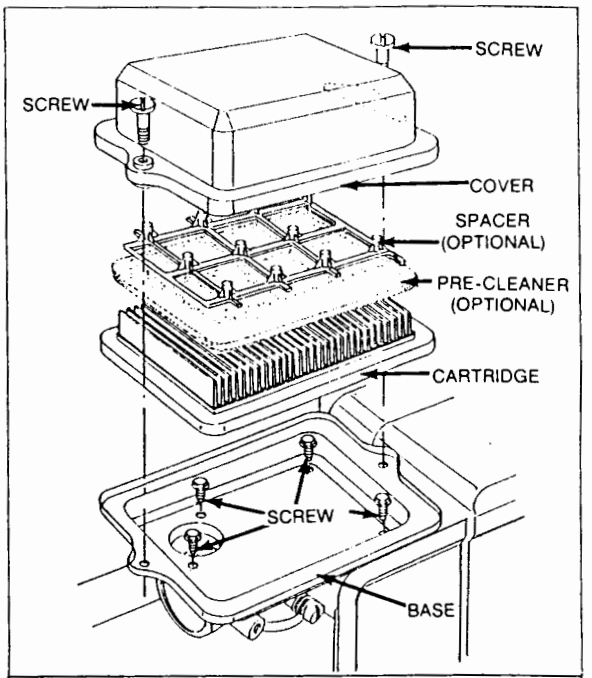

CARTRIDGE AIR CLEANER

REMOVE COMBUSTION DEPOSITS every 100-300 hours of operation. Remove cylinder head and cylinder head shield. Scrape and wire brush the combustion deposits from cylinder, cylinder head, top of piston and around valves. Use a soft brush to remove deposits. Re-assemble gasket, cylinder head and cylinder head shield. Turn screws down finger tight, with the three longer screws around the exhaust valve, if so equipped. Torque cylinder head screws in a staggered sequence to 140 inch pounds (15.82 Nm).

MAINTENANCE (Cont.)

CLEAN ENGINE — Remove dirt and debris with a cloth or brush. Cleaning with a forceful spray of water is not recommended as water could contaminate the fuel system.

CLEAN COOLING SYSTEM — Grass, chaff or dirt may clog the rotating screen and the air cooling system, especially after prolonged service cutting dry grass. Yearly or every 100 hours, whichever occurs first, remove the blower housing and clean the areas shown to avoid overspeeding, overheating and engine damage. Clean more often if necessary.

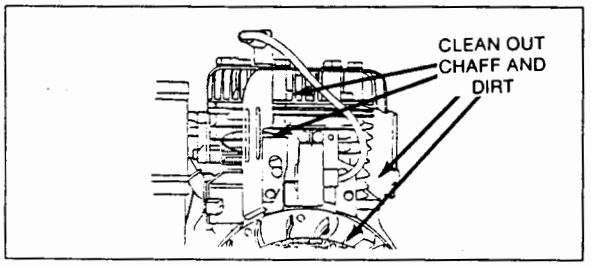

⚠ **WARNING:** Periodically clean muffler area to remove all grass, dirt and combustible debris.

SPARK ARRESTER EQUIPPED MUFFLER — If engine muffler is equipped with spark arrester screen assembly, remove every 50 hours for cleaning and inspection. Replace if damaged.

SPARK PLUG — Clean and reset gap at .030" every 100 hours of operation.

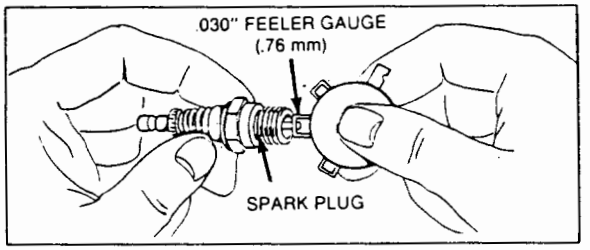

NOTE: Do not blast clean spark plug. Spark plug should be cleaned by scraping or wire brushing and washing with a commercial solvent.

⚠ **CAUTION:** Sparking can occur if wire terminal does not fit firmly on spark plug, or if stop switch vibrates against spark plug. Reform terminal or repair switch if necessary.

ADJUSTMENTS

CARBURETOR ADJUSTMENTS

Minor carburetor adjustment may be required to compensate for differences in fuel, temperature, altitude or load.

NOTE: The air cleaner must be assembled to carburetor when running engine.

TO ADJUST CARBURETOR — Gently turn valve clockwise until it just closes. Valve may be damaged by turning it in too far.

Now open needle valve 1-1/2 turns counterclockwise. This initial adjustment will permit the engine to be started and warmed up (approximately 5 minutes) prior to final adjustment.

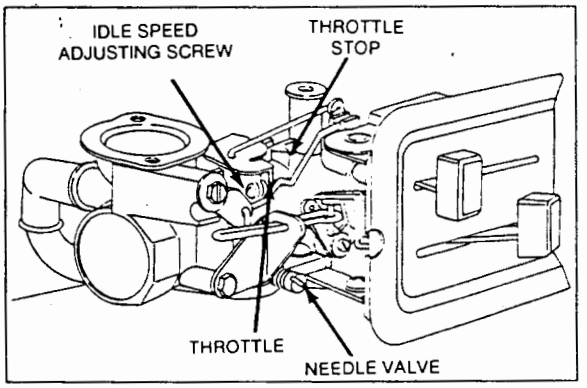

ADJUSTMENTS (Cont.)

Place speed control in "SLOW" position. Turn needle valve in until engine slows (clockwise - lean mixture). Then turn it out past smooth operating point until engine runs unevenly (rich mixture). Now turn needle valve to the midpoint between rich and lean so the engine runs smoothly. Next adjust idle RPM. Rotate throttle counterclockwise and hold against stop while adjusting idle speed screw to obtain 1750 RPM. Release throttle. Engine should accelerate without hesitation or sputtering. If engine does not accelerate properly, the carburetor should be readjusted, usually to a slightly richer mixture.

CONTROL ADJUSTMENTS

The speed control must be properly adjusted to stop, start and operate the engine at maximum speed.

TO CHECK OPERATION OF CHOKE CONTROLS:

Move speed control or choke lever to "choke" position. The carburetor choke should be closed.

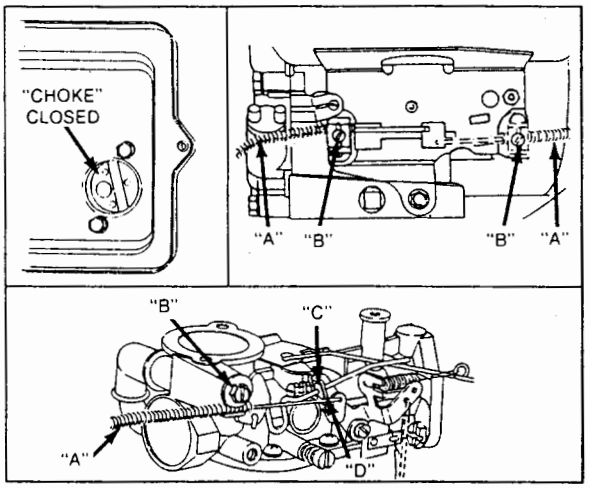

To Adjust:
Place speed control lever on equipment in "FAST" (high speed) position. Loosen control casing clamp screw (B) on control plate. Move control casing (A) and wire forward or backward until washer (C) just touches the choke operating bell crank (D). Tighten casing clamp screw (B) on control plate. Recheck operation of controls after adjustment. Move control lever to "STOP" position. Lever must make good contact with stop switch if so equipped. Replace air cleaner.

SPEED CONTROL ADJUSTMENT

The acceptable operating speed range is 1800 to 3600 RPM. Idle speed is 1750 RPM. The manufacturer of the equipment on which the engine is used, specifies the top governed no load speed at which the engine may be operated. DO NOT EXCEED this speed.

Standard Control — Fixed Speed
The governor speed lever has been adjusted to permit the top no load speed specified by the equipment manufacturer. DO NOT bend governor speed lever.

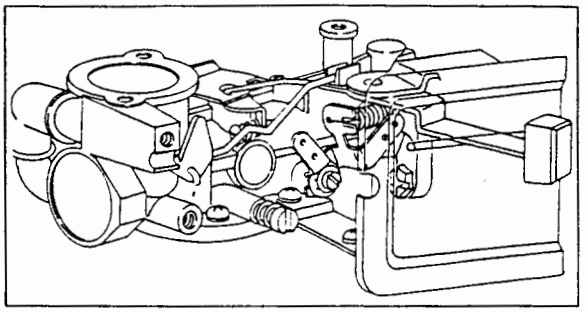

Manual Friction Control
To increase or decrease engine speed, move control lever as shown below.

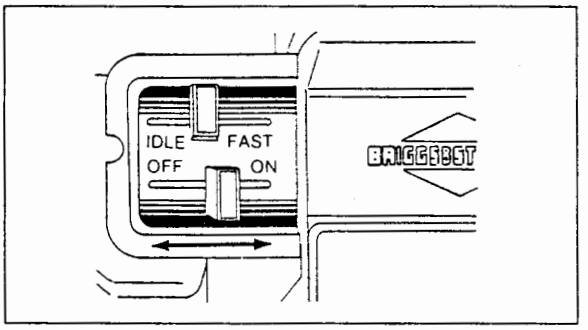

Speed Control
Controls on powered equipment should move governor speed lever in a direction that will elongate governor spring to increase speed.

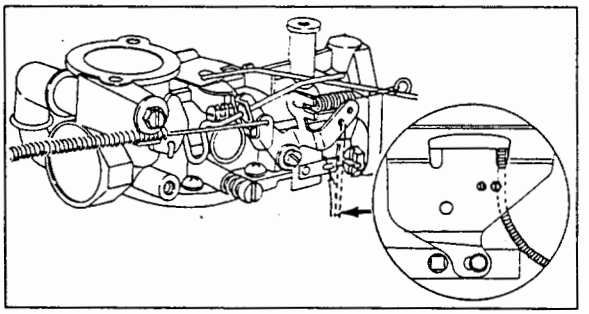

MECHANICAL GOVERNOR

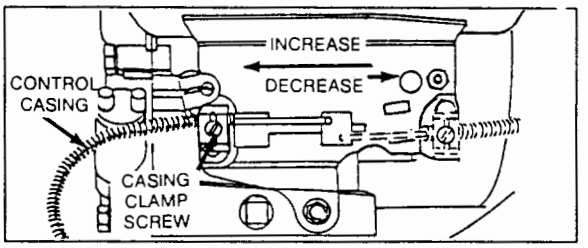

To Adjust:
Loosen clamp screw on carburetor or fuel tank bracket and move casing in or out to obtain proper speed. DO NOT EXCEED maximum speed recommended by manufacturer of your equipment. Retighten clamp screw.

Superseding Warranty
BRIGGS & STRATTON ENGINE WARRANTY POLICY
effective July 1, 1988
Replaces all undated previous Warranties and all Warranties dated before July 1, 1988

When warranty repair is justified, Briggs & Stratton Corporation welcomes such repair by any of its Authorized Service Centers.

In most instances, the requests for warranty brought to the attention of our Service Accounts are handled in a prompt routine manner with no question regarding their validity. However, some requests for warranty are received which appear not justified. In these cases, engine owners may not be aware that the premature failure of their engine was the result of abuse or neglect, or that the difficulty which they experience is caused by the equipment rather than the engine.

BRIGGS & STRATTON WARRANTY covers only DEFECTIVE MATERIAL and/or WORKMANSHIP.

LIMITED WARRANTY

"For time period shown below from date of purchase, Briggs & Stratton Corporation will replace for the original purchasers, free of charge, any part, or parts of the engine, found upon examination by any Factory Authorized Service Center, or by the Factory at Milwaukee, Wisconsin, to be defective in material or workmanship or both; this is the exclusive remedy. All transportation charges on parts submitted for replacement under this Warranty must be borne by purchaser. For warranty service contact your nearest Authorized Service Center as listed in the 'Yellow Pages' under 'Engines, Gasoline' or 'Gasoline Engines.' THERE IS NO OTHER EXPRESS WARRANTY. IMPLIED WARRANTIES, INCLUDING THOSE OF MERCHANTABILITY AND FITNESS FOR A PARTICULAR PURPOSE ARE LIMITED TO ONE YEAR FROM PURCHASE AND TO THE EXTENT PERMITTED BY LAW ANY AND ALL IMPLIED WARRANTIES ARE EXCLUDED. LIABILITY FOR CONSEQUENTIAL DAMAGES UNDER ANY AND ALL WARRANTIES ARE EXCLUDED TO THE EXTENT EXCLUSION IS PERMITTED BY LAW. Some states do not allow limitations on how long an implied warranty lasts, and some states do not allow the exclusion or limitation of incidental or consequential damages, so the above limitation and exclusion may not apply to you. This warranty gives you specific legal rights and you may also have other rights which vary from state to state."

Briggs & Stratton Corporation

F. P. Stratton, Jr.
Chairman and Chief Executive Officer

WARRANTY PERIOD

ENGINES	CONSUMER USE*	COMMERCIAL USE*
All 2 thru 18 hp engines on non-lawn mowing equipment.	1 year-engine	1 year-engine
All 2 thru 18 hp engines on lawn mowing equipment and all Sno Gard engines	2 year-engine*** 5 year-Magnetron® ignition***	1 year-engine
All Vanguard and I/C® engines	2 year-engine Lifetime**-Magnetron® ignition	2 year-engine Lifetime**-Magnetron® ignition

* For purposes of this warranty policy, "consumer use" shall mean personal residential household use by the original retail consumer. "Commercial use" shall mean all other uses, including use for commercial, income producing or rental purposes. Once an engine has experienced commercial use, it shall thereafter be considered as a commercial use engine for purposes of this warranty policy.

** Lifetime limited warranty of the Magnetron® ignition shall cover parts and labor for the first five (5) years from the date of purchase; thereafter only parts. "Lifetime" shall mean lifetime of the engine in the hands of the original purchaser.

*** Applies to equipment retailed in the U.S.A. and Canada. In all other countries, the warranty for CONSUMER USE is the same as COMMERCIAL USE.

NO REGISTRATION (WARRANTY) CARD IS NECESSARY TO OBTAIN WARRANTY ON BRIGGS & STRATTON ENGINES. SAVE YOUR PURCHASE RECEIPT. PROOF OF PURCHASE DATE WILL BE REQUIRED TO OBTAIN WARRANTY.

(over)

If warranty service is needed, contact your nearest Authorized Briggs & Stratton Service Center. For prompt attention, your Center will need to know the engine model, type and code numbers, the trouble experienced and the total number of hours the engine was run.

BRIGGS & STRATTON WARRANTY covers only DEFECTIVE MATERIAL and/or WORKMANSHIP.

Briggs & Stratton Corporation welcomes the opportunity to make justified warranty repairs by any of its Authorized Service Centers. In most instances, the requests for warranty repair are handled in a quick and routine manner. However, some requests for warranty are received which appear not justified. In these cases, though engine owners may not be aware of it, the premature failure of their engine was caused by abuse or neglect, or the equipment on which it was mounted, rather than the engine.

If you differ with the decision of your Service Center, investigation will be made to determine the applicability of warranty. Ask the Service Center to submit all supporting facts to the Factory for review. If the Factory decides that your claim is justified, you will be fully reimbursed for those items accepted as defective. To avoid misunderstanding which might occur between engine owners and Authorized Briggs & Stratton Service Centers, we list below some of the causes of engine failure that Briggs & Stratton warranty does not cover for repair or replacement.

NORMAL WEAR:

Engines, like all mechanical devices, need periodic parts service and replacement to perform well. Warranty will not cover repair when normal use has exhausted the life of a part or an engine.

IMPROPER MAINTENANCE:

Remember that the service life of an engine depends upon the conditions under which it operates and the care it receives. Some applications, such as tillers, trash pumps and rotary mowers, are very often used in dusty or dirty conditions which can cause what appears to be premature wear. Such wear, when caused by dirt, dust, spark plug cleaning grit or other abrasive material that has entered the engine because of improper maintenance, is not covered by warranty.

WARRANTY DOES NOT APPLY FOR SOME ADJUSTMENTS OR IF ABUSE OR NEGLECT CAUSES ENGINE DAMAGE: SUCH AS

1. Bent or broken crankshafts that could be caused by striking a solid object with the cutter blade of a rotary lawn mower;
2. Sticking valves or clogged carburetors, fuel pipes or other damage caused by using contaminated or stale fuel (Use clean, fresh, lead-free gasoline.);
3. Parts which are scored or broken because an engine was operated with insufficient lubricating oil, improper grade of lubricating oil, or contaminated lubricating oil in the case of a 4 cycle engine, or operated with incorrect BIA/NMMA certified oil/gas mixture in the case of a 2 cycle engine. (For a 4 cycle engine, check the oil level daily or after 8 hours and refill when necessary. Change oil at recommended intervals. For a 2 cycle engine, use the correct oil/gas mixture.);
4. Parts damaged by overspeeding or overheating caused by dirt, grass or debris plugging the cooling fins and clogging the flywheel area, or caused by operating the engine in a confined area without sufficient ventilation (Clean fins on the cylinder, cylinder head and flywheel at recommended intervals.);
5. Damage or wear to parts caused by dirt which entered the engine because of improper air cleaner maintenance or re-assembly (Clean and re-oil the foam pre-cleaner and clean or replace the paper cartridge at recommended intervals.);
6. Damage or wear to parts caused by grit which entered the engine from spark plugs cleaned on an abrasive blast cleaning machine;
7. Tune-up or adjustment needed by an engine but not caused by defective material nor workmanship (Follow the "Operating and Maintenance Instructions" when making any minor adjustments.);
8. Parts broken by excessive vibration caused by loose engine mounting, loose cutter blades, unbalanced blades or impellers, improperly attaching equipment to engine crankshaft, overspeeding or abuse in operation;
9. Repair or adjustment of associated parts or assemblies such as clutches, transmissions, remote controls, etc., which are not of Briggs & Stratton manufacture;
10. PARTS THAT ARE NOT ORIGINAL BRIGGS & STRATTON PARTS OR PARTS THAT ARE NOT APPROVED BY BRIGGS & STRATTON.

WARRANTY IS AVAILABLE ONLY THROUGH SERVICE CENTERS WHICH HAVE BEEN AUTHORIZED BY THE BRIGGS & STRATTON CORPORATION. YOUR NEAREST SERVICE CENTER IS LISTED IN THE YELLOW PAGES OF YOUR TELEPHONE DIRECTORY, UNDER "ENGINES, GASOLINE" OR "GASOLINE ENGINES."

FORM 272204-11/88

Port of Tacoma
June 3, 1994

ATTACHMENT A-3
CONTROLLER OPERATIONS AND MAINTENANCE MANUAL

OPERATING AND MAINTENANCE MANUAL

GEOGUARD 5001 CONTROLLER

Manufacturer and Source of Replacement Parts:

AMERICAN SIGMA, INC.

One Elizabeth Street

P.O. Box 300

Middleport, NY 14105

(716) 735-3616 or (800) 635-4567

Telex 750101 - Fax (716) 735-3711

August 1, 1989

Charging the Battery

A new, fully charged battery will offer up to 40 hours of service. When the battery has been 90% drained a 16 hour recharge is required. By periodically charging the battery after a day or two of usage, an overnight charge will generally be sufficient.

The charger supplied is a constant voltage, limited current type. Therefore it will not cause the battery to be overcharged. Please note that the charger is rated for indoor use only as it is of an ungrounded configuration.

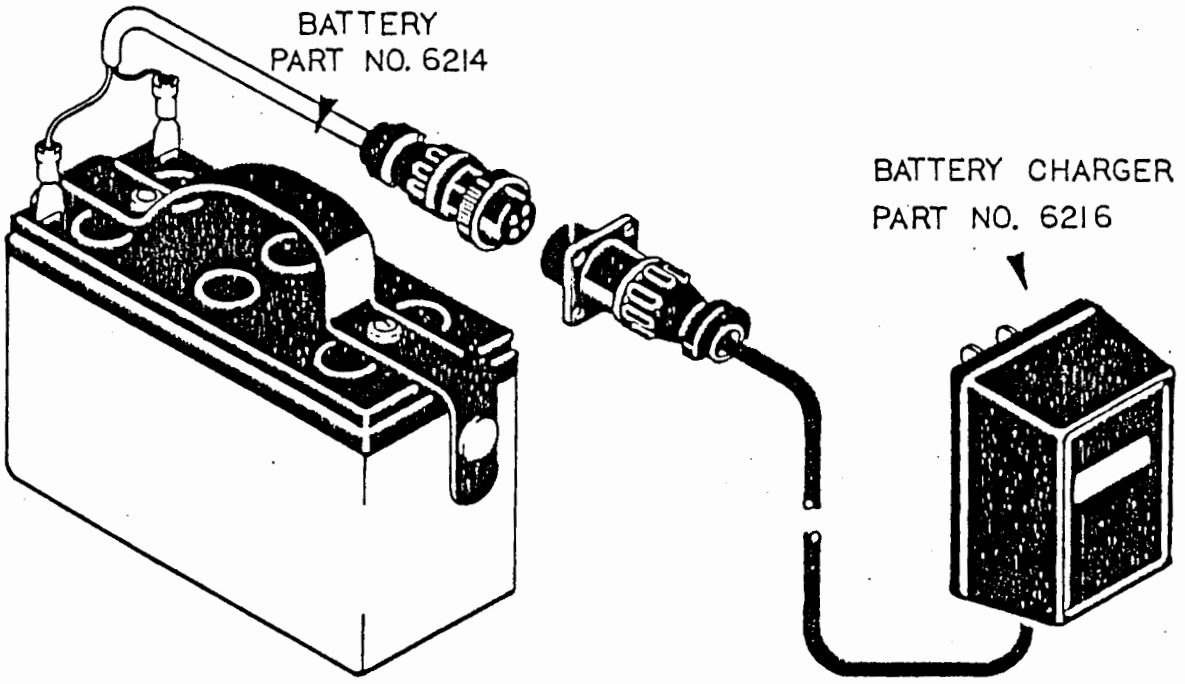

Exhaust Time Adjustment (Refill Mode)

- The exhaust mode adjustment is similar to the pressure mode adjustment except that this adjustment vents the pump until it can completely refill.

- Adjustment of the exhaust time (pump refill) should follow the pressure time adjustment.

- It is possible to determine when the optimum refill time is achieved by first adjusting the discharge timer as previously explained. Adjust the exhaust time by observing the discharge of water from the discharge tubing. If the pressure time is properly adjusted such that the controller switches from pressure to exhaust at the moment flow from the discharge tube stops, then just enough pressure time is applied to evacuate a completely full pump.

If the exhaust time is shortened to the point that the pump is not completely full, then the water will stop discharging before the controller switches from pressure to exhaust. If this occurs, increase the exhaust time by rotating the knob slightly to the right to allow the pump to completely refill.

Note: In a draw down situation (where the submergence is decreasing) more exhaust time may be required to allow the pump to completely refill. Monitor the volumetric output if possible.

Flow Rate Adjustment

The large knob on the lower right corner of the controller panel labeled "regulator" is used to control the flow and pressure of the drive air to to the pump.

Note: .5 psi is required per foot of pumping depth to develop flow.

For maximum flow and pressure, rotate this knob fully clockwise. Maximum flow rate may be desired during the purge activity. However, when sampling for sensitive parameters where sample agitation or aeration must be avoided, or when pumping through a flow cell, the flow from the discharge tube may be decreased by rotating the regulator knob in a counterclockwise direction. The output pressure gauge on the panel indicates the pressure within the air line to the pump and operates only when the controller is in the pressure (discharge) mode.

Controller Mechanical Manual Override

Under some circumstances it may be useful to apply pressure to the pump for a longer duration than allowed by the 1-40 second adjustable timers. Examples of this might be when using a flow cell where very low flow through the cell is desired or when using in-line filters.

The push-button marked "manual" located directly beneath the "exhaust time" knob is provided to allow the controller to be actuated manually. Manual operation of the Model 5001 does not require battery power.

To operate the controller manually, simply depress the button fully to deliver drive air to the pump and release it to allow the pump to refill.

Automatic Operation

Optimum performance of the pump is achieved by proper adjustment of the pressure and exhaust timers. When properly adjusted the controller will switch from exhaust (refill) to pressure (discharge) at the moment the pump is completely full; and will again switch from pressure (discharge) to exhaust (refill) at the moment that the pump is sufficiently evacuated.

In the field this adjustment is very simple and rapid to accomplish, although trying to follow the written explanation may seem confusing. With a little practice these adjustments will take only seconds.

Using the GEOGUARD System

- Install the pump and tubing assembly in the well.
- Connect the 12 VDC battery to the controller.
- Attach the 10 foot airline from the controller to the pump tubing.
- Attach the 25 foot airline form the controller to the drive air source. (Be sure to have the inline air filter attached to the controller).

Note: If using a gas bottle as the drive air source, a 200 psi two-stage regulator must be used on the gas bottle. Failure to do so may result in damage to the controller and possible personal injury.

- Rotate the pressure time knob until the line on the knob face is at approximately 10 o'clock. This corresponds to approximately 13 seconds.
- Rotate the exhaust time knob until the line on the knob is at approximately 9 o'clock. This corresponds to approximately 7 seconds.
- Turn the drive air source on.
- Move the toggle switch to the "on" position.
- Let the controller go through 3 to 5 full cycles before re-adjusting the pressure and exhaust timers. This will allow the pump discharge tubing to fill with water.

Pressure Time Adjustment (Discharge Mode)
- When water begins to flow from the discharge tubing, watch the flow relative to the pressure time. One of the following will occur:

A) If the controller switches to the exhaust mode (recognizable by the hiss of escaping air) before water stops flowing from the discharge tube increase the pressure time by rotating the knob slightly to the right (clockwise). Allow the controller to go through one complete cycle. Continue to rotate the knob to the right (allowing one full cycle between adjustments) until the controller switches to exhaust just as water stops flowing from the discharge tube.

B) If water stops flowing from the discharge tube before the controller switches to exhaust, decrease the pressure time by rotating the knob slightly to the left (counterclockwise). Allow the controller to go through one complete cycle. Continue to rotate the knob to the left (allowing one full cycle between adjustments) until the controller switches to exhaust just as water stops flowing from the discharge tube.

Air Lines

Two compressed air lines are supplied with the Model 5001 Controller. One air line has a large female quick-connect fitting at both ends. One end is for connection to the corresponding male quick-connect fitting on the controller panel, and the other end is for attachment to the drive air source.

The other air line has a "quick exhaust" valve with a small female quick-connect fitting attached at one end and a male quick-connect fitting at the other end. The male quick-connect attaches to the corresponding female quick-connect on the controller panel. The small female quick-connect is for attachment to the corresponding male quick-connect fitting located at the top end of the pump tubing assembly.

Air Line - Controller/Compressor

Part No. 5008

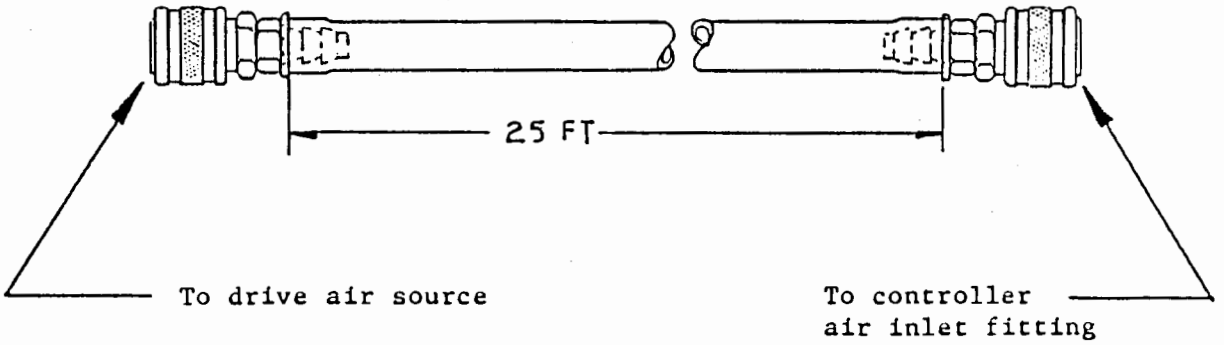

Air Line - Controller/Splitter

Part No. 5009

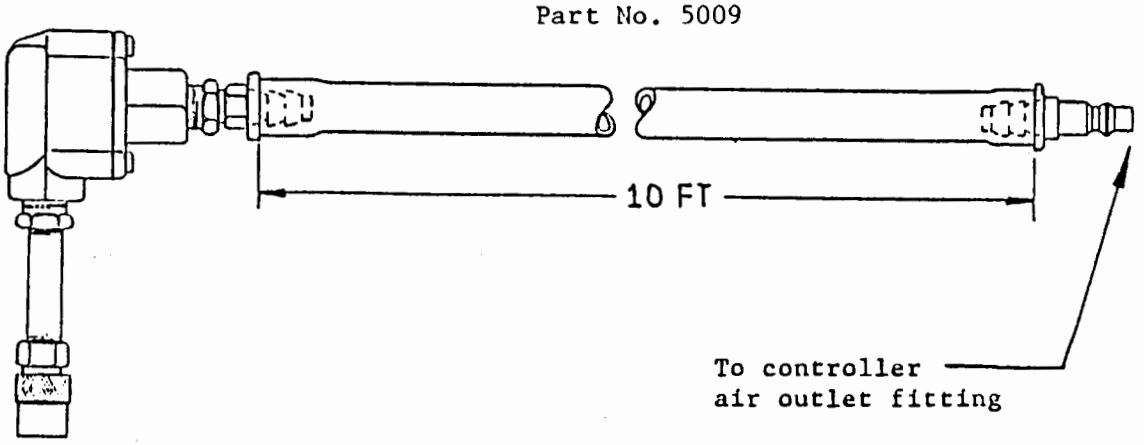

Note: Never have the controller "on" without this end of airline attached to pump air fitting. This may cause the internal pink gasket to be blown out of place.

GEOGUARD Model 5001 Automatic Controller

The GEOGUARD Model 5001 controller is a highly portable and convenient means of cycling the compressed drive air to the GEOGUARD pump. It is housed in a light weight, yet rugged molded polyethylene case. The 5001 Controller is equipped with a pressure gauge which indicates the pressure inside the pump, a flow adjustment which is used to increase or decrease the flow rate of the pump, and two timer adjustments; one for refill and one for discharge. The internal timer board is 100% solid state and is coated with polyurethane for rugged, dependable field use.

The Model 5001 Controller is powered by a 6 amp-hour 12 VDC rechargeable battery. The controller will operate for approximately 40 hours on a fully charged battery. It is also equipped with a mechanical manual override which allows the controller to be actuated without battery power.

The GEOGUARD Model 5001 is standardly equipped with the following accessories:

- 6 Amp-hour 12 VDC gel cell battery
- Battery charger
- 25 feet of 3/8" I.D. air line, with fittings for connecting the controller to the drive air source
- 10 feet of 3/8" I.D. air line, with quick exhaust valve and fittings for connecting the controller to the pump tubing
- High efficiency inlet air filter

The controller is rated for a maximum working pressure of 200 psi, which will operate a Bladder pump, Gas-Drive pump or Two-Stage pump at lift conditions to 430 feet.

Controller Operation

The controller is attached between the compressed air source and the pump tubing. Its function is to regulate the flow of compressed air to the pump. The controller essentially has two systems. One system controls the necessary cycling of the drive air from pressure (discharge) to vent (refill). On the left half of the controller panel are two adjustable knobs. The left knob, marked "Pressure Time", adjusts the time that compressed air is delivered to the pump. Rotating this knob to the left decreases the amount of time that the drive air is allowed to flow into the pump and rotating this knob to the right increases the time of the drive air delivery.

The right knob, marked "Exhaust Time", adjusts the time that the pump is vented to atmosphere. This venting allows the pump to refill after discharging. Rotating this knob to the left decreases fill/vent time, rotating this knob to the right increases fill/vent time.

The second system is located on the right side of the controller panel. At the top right is a pressure gauge which has a range of 0 to 300 psi. Immediately below the gauge is a large knob used to regulate pressure of the drive air. The function of this knob is to increase or decrease drive air pressure which in turn controls the flow rate of the pump. Rotating this knob all the way to the right will cause the pump to discharge as rapidly as possible in any given situation. Rotating this knob to the left will decrease flow rate.

User/Safety Warnings

1) Compressed air can be dangerous. If an air line were to rupture immediately turn off the air supply.

2) Use common sense. Maintain your equipment.

3) If using a bottled gas supply, follow DOT regulations. Always use a two-stage regulator on the tank.

4) AMERICAN SIGMA recommends using a oil-less (i.e. instrument grade) air compressor. It is the operators responsibility to use a filter system to clean up oilly compressed air.

   Consult AMERICAN SIGMA for recommendations.

   Note that a filter is supplied with your unit. Its main purpose is to remove water and particulate from the compressed air supply. It is <u>not</u> a coalescing type filter.

   Any problems that result from failure to use a clean air supply will void warranty.

5) Follow the instructions as contained within this manual. If problems arise consult the factory for assistance.

AMERICAN SIGMA

GEOGUARD

Model 5001 Automatic Cycle Controller

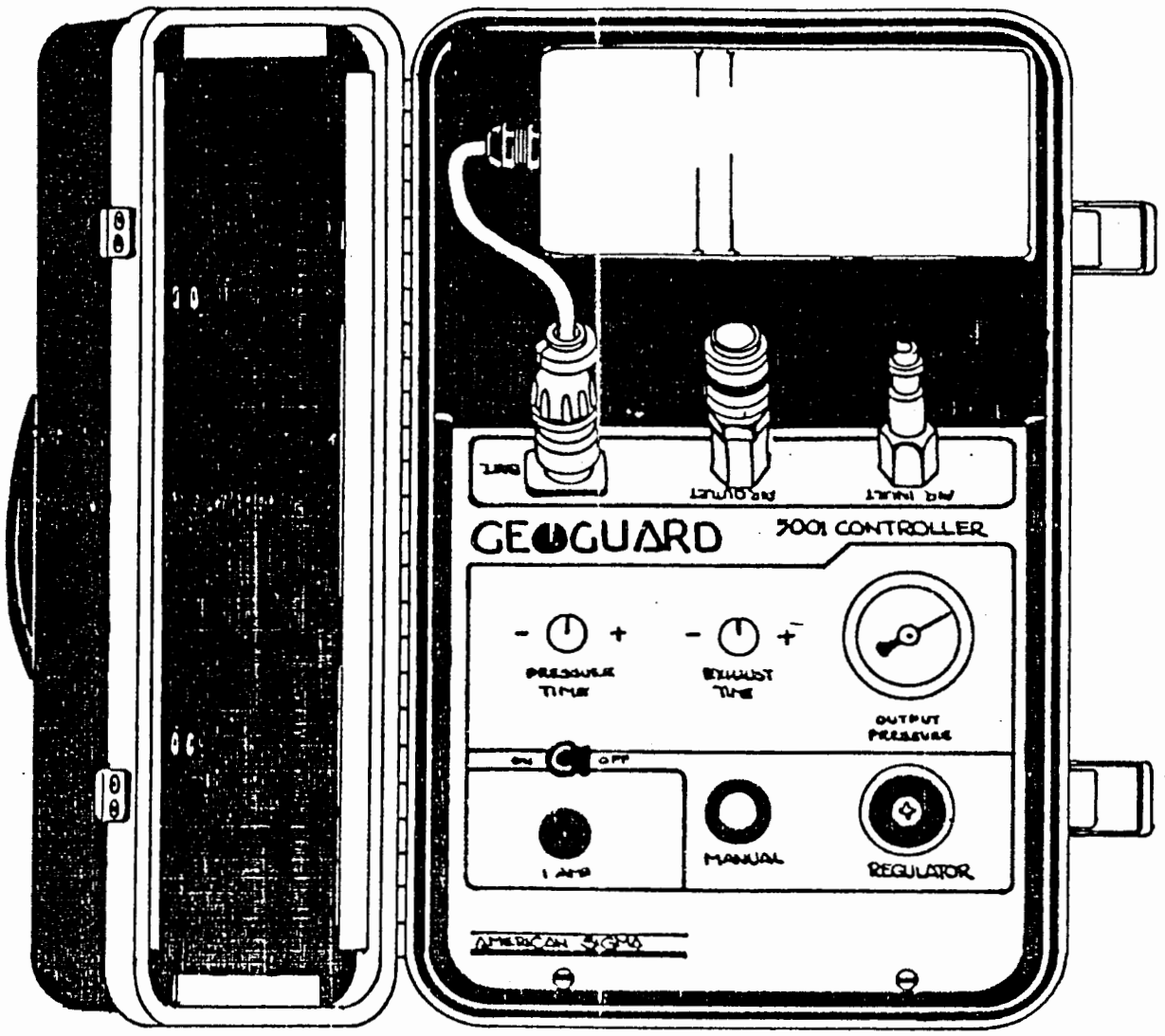

ONE ELIZABETH ST., P.O. BOX 300, MIDDLEPORT, N.Y. 14105-0300 (716) 735-3616

WARRANTY

Each **AMERICAN SIGMA GEOGUARD** groundwater sampling product is warranted by AMERICAN SIGMA, INC. to be free from defects in material and workmanship according to the following schedule:

Well Dedicated Components (including Two-Stage pumps, bladder pumps, purge pumps, intake screens, packers, tubing, well closures and associated fittings) will be warranted for a period of two years from the date of shipment.

Portable Components will be warranted for a period of one year from date of shipment.

This warranty is the sole and exclusive warranty as regards to the product sold to you by AMERICAN SIGMA, INC. and there are no other warranties, expressed or implied; AMERICAN SIGMA, INC. specifically disclaiming any such warranty. No representative or agent of AMERICAN SIGMA, INC. except a corporate officer, is authorized to modify, enlarge or extend the above warranty and only a written instrument signed by a corporate officer specifically shall be effective to modify, enlarge or extend the same.

The goods are sold and accepted with the understanding and agreement that AMERICAN SIGMA, INC.'s liability is limited to the price of the unit sold.

For repair assistance call the AMERICAN SIGMA GEOGUARD product service center.

Phone: 1-800-635-4567 (within New York State; call: 716-735-3616).

Port of Tacoma
June 3, 1994

ATTACHMENT A-4
QUALITY ASSURANCE PROJECT PLAN
FOR GROUNDWATER QUALITY ANALYSIS
SITCUM WATERWAY REMEDIATION PROJECT

ATTACHMENT A-4
QUALITY ASSURANCE PROJECT PLAN
FOR GROUNDWATER QUALITY ANALYSIS
SITCUM WATERWAY REMEDIATION PROJECT

INTRODUCTION

The purpose of the Quality Assurance Project Plan (QAPP) presented herein is to give, in specific terms, the objectives, organization, and functional activities, associated with the Groundwater Monitoring Network around the Milwaukee Waterway in Tacoma, Washington. This program was developed to assess the potential impact on the local groundwater quality from filling the Milwaukee Waterway.

This QAPP covers the sampling and analysis of groundwater samples obtained from the Sea-Land terminal adjacent to the Milwaukee Waterway.

Groundwater monitoring will be performed to assess the possible impact to groundwater quality from filling the Milwaukee Waterway with dredged sediments from the Sitcum Waterway and the Blair Waterway.

The EPA (1980) provides a specific set of guidelines to aid in preparing a QAPP. This document is consistent with and meets the intent of these guidelines. In addition, a number of other EPA documents were used as aids in preparing this document (EPA, 1987; 1988; and 1989).

Hart Crowser personnel will perform field activities for the groundwater monitoring program. Laucks Testing Laboratories (Laucks) of Seattle, Washington will perform the chemical analyses of water samples.

PROJECT ORGANIZATION AND RESPONSIBILITY

Project organization of individuals responsible for quality assurance (QA) are shown on Figure A-4-1. Responsibilities of these individuals are summarized in Table A-4-1.

QUALITY ASSURANCE OBJECTIVES FOR MEASUREMENT OF DATA IN TERMS OF PRECISION, ACCURACY, REPRESENTATIVENESS, COMPARABILITY, AND COMPLETENESS

The primary QA objective for this project is to ensure the data collected are of known and acceptable quality so that the goal of the Groundwater Monitoring Program can be achieved. The groundwater monitoring goal is to:

- Assess the groundwater quality around the Milwaukee Waterway confined disposal facility.

The second QA objective for this project is to collect representative groundwater data that can be compared with historical data and future sampling data collected at the site.

The quality of the laboratory data is assessed by precision, accuracy, representativeness, comparability, and completeness (the "PARCC" parameters). Definitions of these parameters and the applicable quality control (QC) procedures are given below. Applicable quantitative goals for these data quality parameters are listed or referenced in Tables A-4-2 and A-4-3.

Chemical Analyses

The specific analytical methods and the intended use of the data dictate the applicable QC procedures and quantitation limits that will be employed. For this project, the chemical data will be used to assess groundwater quality in the area around the Milwaukee Waterway confined disposal facility.

Groundwater Monitoring Program

Methodologies which are presently approved by the EPA will be used during the groundwater monitoring program. Data collected during the program will be usable for evaluation of the groundwater quality after sediments have been dredged from the Sitcum Waterway and the Blair Waterway, and placed into the Milwaukee Waterway.

Table A-4-2 lists the chemical parameters that will be analyzed during the groundwater monitoring program. Analytical methods and their respective detection limits are identified in the table. CLP and Contract Required Quantitation Limits (CRQLs)/Contract Required Detection Limits (CRDLs) are provided in Table A-4-2.

Table A-4-3 provides precision and accuracy objectives for chemical parameters listed in Table A-4-2. These precision and accuracy objectives are based on the interim analytical methods listed in Table A-4-2.

Quality Assurance Objectives

Precision. Precision measures the reproducibility of measurements under a given set of conditions. Specifically, it is a quantitative measure of the variability of a group of measurements compared to their average values. Analytical precision is measured through matrix spike/matrix spike

duplicate (MS/MSD) samples for organic analyses, MS/duplicate samples for metals, and through duplicate samples for other inorganic analyses.

Analytical precision is quantitatively expressed as the relative percent difference (RPD) between the MS/MSD or duplicates. Analytical precision measurements will be carried out at a minimum frequency of one-per-sampling event or one-in-twenty samples analyzed. A quantitative definition of the RPD is given later in this appendix. Table A-4-3 presents the target quantitative objectives for analytical precision for the groundwater samples.

Accuracy. Accuracy is a measure of the closeness of the measured value to the true value. The accuracy of chemical test results is assessed by analyzing standard reference materials (SRMs) or by "spiking" samples with known standards (surrogates and/or matrix spikes) and measuring the percent recovery. A quantitative definition of percent recovery is given later in this appendix.

Accuracy measurements will be carried out in accordance with EPA CLP Statement of Work (SOW) requirements for organic and inorganic analyses (EPA, 1990a; 1990b) and at a minimum frequency of one-in-twenty samples analyzed. Target quantitative accuracy objectives are presented in Table A-4-3.

The laboratory will also analyze the SRMs listed in Table A-4-4. The SRMs and catalog numbers listed in Table A-4-4 may change due to availability and number variations.

Representativeness. Representativeness is a measure of how closely the measured results reflect the actual concentration or distribution of the chemical compounds in the matrix sampled. The sampling plan design, sampling techniques, and sample handling protocols (e.g., storage, preservation, and transportation) have been developed to assure representative samples. Field replicates obtained at a minimum of 10 percent frequency will be used to assess field and method variation. Laboratory method blanks will be run at a minimum of 5 percent frequency to assess laboratory contamination.

Comparability. Comparability is a qualitative parameter expressing the confidence with which one data set can be compared with another. The use of standard techniques for both sample collection and laboratory analysis should make data collected comparable to both internal and other data generated.

Completeness. Completeness is defined as the percentage of measurements judged to be valid. Results will be considered valid if all the precision, accuracy, and representative objectives are met. A target

completeness goal for this work will be 90 percent. A quantitative definition of completeness is given later in this appendix.

SAMPLING PROCEDURES

Sample site location and description, and sampling procedures are detailed in the Groundwater Sampling Operations Manual for this project. This operations manual provides guidance for field personnel involved in the groundwater monitoring program. This document was written to ensure that representative samples that fulfill the Port's data objectives are collected.

Documentation

The information provided within the QAPP outlines the data documentation procedures which will be followed to assure quality data. The documentation procedures include the specific data forms identified below.

Field Form	Figure Number
Field Groundwater Sampling Data Form	A-4-2
Field Report Form	A-4-3
Field Sample Custody Record Form	A-4-4

These forms will be used to record specific field observations. General field observations will be recorded in a field notebook. Daily field report forms will be completed based on the day's field notes.

Field Sampling

A brief discussion on the QA procedures to be used during field sampling follows. The objective of the field QA program is to ensure representative groundwater samples are collected and that no cross contamination between monitoring wells occurs.

Water Levels. Groundwater levels will be collected from all monitoring wells prior to sampling. The device used to measure water levels will be decontaminated with distilled water between wells to ensure no cross contamination occurs.

Sampling. Monitoring wells will be sampled using their respective dedicated bladder pumps. These pumps were installed to eliminate the potential of cross contaminating monitoring wells during the sampling program. Purging of the wells prior to sampling until turbidity measurements have stabilized will be done to ensure that representative groundwater samples are collected.

Groundwater Parameters. Groundwater parameters, such as temperature, pH, and electric conductivity, will be collected after sampling. Parameters will be recorded on the Field Groundwater Sampling Data Form (Figure A-4-2).

Calibration. Calibration procedures for field equipment shall be performed as described later in this appendix.

Dissolved Metals Field Filtered. Samples collected for dissolved metals will be filtered in the field using an in-line 0.45 micron filter. The sample will be filtered into a certified clean container containing an appropriate preservative, as identified in Table A-4-5.

Saline Groundwater Samples Identified. Saline groundwater samples collected for metal analyses shall be differentiated from fresh water samples. These samples will be identified by their electric conductivity measurement obtained after the sample has been collected. Saline samples for this project will be defined as having electric conductivity readings in excess of 2,000 micromhos/centimeter. These samples will have their respective electric conductivity measurement recorded on the sample label and an appropriate note will be made on the chain of custody form. Saline water interferes with certain metal analyses, therefore, saline samples will be handled differently in the laboratory (Table A-4-2).

Sample Handling. Groundwater samples will be collected in certified precleaned containers obtained from the lab, described below. All samples will be stored at 4 degrees celsius. Samples will be labeled and appropriate chain of custody procedures will be followed as described in the **SAMPLE CUSTODY** section. All wastewater generated will be handled as described in the Groundwater Sampling Operations Manual.

Sample Containers, Storage, and Holding Times

To control the quality of samples submitted for laboratory analysis, established preservation and storage measures will be followed. Table A-4-5 provides information on holding times, sample containers, and sample preservation requirements. All sample containers will be obtained directly from Laucks. Laucks will purchase sample containers which are precleaned and certified free of contamination. These sample containers will be purchased from Environmental Sampling Supply of Oakland, California and Baxter Scientific. Specific container sizes and preservatives added by Laucks are also identified in Table A-4-5.

The containers are precleaned to one of three specifications, depending on the analytical purpose, described below:

Procedure 1. For extractable organics (acid/base/neutral compounds and pesticides/polychlorinated biphenyls). The 1-liter, amber glass bottles, teflon liners, and caps are washed in hot tap water using laboratory grade non-phosphate detergent. All are then rinsed three times with hot tap water. All are then rinsed once with 1:1 nitric acid (HNO_3) and then rinsed three times with American Society for Testing and Materials (ASTM) Type I deionized water (metals-grade HNO_3 and ASTM deionized water). A final rinse is made using pesticide grade.

Procedure 2. For aqueous total organic carbon. The 40 milliliter glass vials, teflon-backed septa, teflon liners, and caps are washed in hot tap water using laboratory grade non-phosphate detergent. All are then rinsed three times with hot tap water followed by three rinses with ASTM Type I deionized water. The vials, septa, and liners are oven-dried at 125 degrees celsius, then allowed to cool to room temperature in an enclosed, contaminant-free environment before assembling.

Procedure 3. For metals, cyanide, and miscellaneous inorganic constituents, the 1-liter polyethylene bottles and caps are washed in hot tap water using laboratory grade non-phosphate detergent, then rinsed three times with hot tap water followed by one rinse with 1:1 HNO_3 (metals-grade HNO_3 and ASTM deionized water). All are then rinsed three times with ASTM Type I deionized water, inverted and air-dried in a contaminant-free environment before assembling.

All containers will be labeled with the cleaning procedure employed and lot number. Holding time requirements are presented in Table A-4-5.

SAMPLE CUSTODY

This section provides guidance on labeling and custody of samples.

Sample Labeling

Sample labels will clearly indicate sampling locations, sample number, date, sampler's initials, and any pertinent comments such as specifics of filtration (for metals). Labels will be filled out at the time of sampling. A typical sample label is presented on Figure A-4-5.

Sample Custody

Definition of Custody. After recovery, samples will be maintained in Hart Crowser's custody until formally transferred to another party. For purposes of this work, custody will be defined as follows:

- In plain view of the field representatives;

- Inside a cooler which is in plain view of the field representative; or

- Inside any locked space such as a cooler, locker, car, or truck to which the field representative has the only immediately available key(s).

Custody Records. A chain of custody record will be initiated at the time of sampling for each sample collected. This record will be signed by the sampler and others who subsequently hold custody of the sample. A typical custody form is presented on Figure A-4-4.

Groundwater samples will be taken directly to Laucks at the end of the sampling day.

Custody Seal. Samples selected for chemical analyses along with their respective custody records will be transported to the chemical laboratory in coolers with custody seals affixed. A typical custody seal is shown on Figure A-4-6.

Laucks Laboratory Custody Procedures

The samples will be logged into an electronic Laboratory Information Management System (LIMS) based on date of receipt and matrix. Each work order generated by the system bears a discrete, sequential number and, within the work order, each sample bears a unique identifier, the "dash" (or sample) number. Both the 7-digit work order number and the unique dash number are written on each sample bottle label in indelible ink. Client sample identification is cross referenced electronically in the LIMS system; the number and types of bottles submitted for each sample are also recorded. The client sample identification and corresponding laboratory identification are used to generate a Sample Delivery Group (SDG) sheet, which is distributed to the laboratory. (A SDG is a CLP convention that associates samples in groups of 20 or fewer, based on date of receipt.)

The electronically generated sample information is cross checked by a second party prior to computerized transmittal of the LIMS information to the laboratory and distribution of the hard copy SDG sheet to analytical group supervisors. A hard copy record of the computerized sample information is made and filed alphabetically by client name. Along with this hard copy record are filed all accompanying documents (such as chain of custody forms) and a copy of the SDG sheet. This hard copy record now comprises the case master file.

Secure Sample Storage. Following log in, samples are removed to secure storage areas appropriate to the sample type. Analysts must sign samples in and out of storage. Volatile organics aliquots are stored at 4 degree celsius, under lock and key, in a refrigerator reserved for the purpose.

They are stored separately from other sample types and from standards. Analysts must sign samples in and out of storage.

Aliquots for extractable organics (semivolatiles and pesticides/PCBs) are removed to secure, refrigerated storage in the extractions laboratory located 921 South Harney Street. The transfer from 940 South Harney (where samples are received and logged) to 921 South Harney is done under internal chain of custody. All entrances to this building are kept locked at all times.

Aliquots for inorganic determinations are stored at 4 degrees celsius in the main building, under lock and key. Analysts must sign samples in and out of storage.

Recordkeeping. All documents received with the samples are retained in the case master file. All bench sheets, raw data, internal chain of custody documents, and other paperwork generated during storage, handling, and analysis of the samples come together at the completion of analysis, prior to reporting, and remain together filed underneath the 7-digit laboratory work order number. Documents are retained in hard copy for 10 years; after the first year, storage is off site at Shurgard Records Management in Seattle, Washington.

CALIBRATION PROCEDURES AND FREQUENCY

Field Calibration

Calibration for pH and conductivity probes will be performed at Hart Crowser by the field equipment maintenance manager according to manufacturer's specifications.

Laboratory Calibration Procedures

The laboratory calibration procedures are specified in the EPA CLP SOWs for each parameter (EPA, 1990) or the method manuals for non-CLP analyses.

ANALYTICAL PROCEDURES

Table A-4-2 presents the target list of compounds. Except where specified in Table A-4-2, organic and metal analyses will be performed in accordance to protocols specified in the March 1990, EPA CLP SOW for organic analyses and the March 1990, EPA CLP SOW of inorganic analyses (EPA, 1990a; 1990b). Tentatively identified compounds (TICs) will also be reported for this program. CLP protocols will be used for TICs.

Modification of Protocols - Organic Analyses

Modifications to protocols for the analysis of organic substances specified in the March 1990, EPA LP SOW (EPA, 1990a) are identified in Table A-4-2 and summarized below.

- Gas chromatograph/mass spectrometer semivolatile and volatile organic compounds will be reported to their respective method detection limits as long as spectral confirmation can be made.

Modification to Protocols - Inorganic Analyses

Modifications to protocols for the analysis of metals specified in the March 1990, EPA CLP SOW (EPA, 1990b) are identified in Table A-4-2 and summarized below.

- Selected metals in fresh water will be analyzed by concentrating the sample 10 times for the purpose of achieving lower detection limits. The sample will first be digested by the March 1990, EPA CLP SOW (EPA, 1990b) protocol and then it will be concentrated. Table A-4-2 identifies these selected metals.

- Selected metals in saline water will be analyzed by digesting the sample using March 1990, EPA CLP SOW (EPA, 1990b), and leaving the sample unconcentrated. The extract may need to be diluted due to the saline matrix. The CLP detection limit in Table A-4-2 is adjusted by a factor of 10 to reflect this need for dilution. Actual dilutions may range between 2 to 10 times depending on the sample matrix, therefore, detection limits identified in Table A-4-2 may actually be lower than that listed.

Non-CLP Analyses

Selected analytes have not had CLP protocols established and will be analyzed using conventional analyses in accordance to the following references:

- "Test Methods for Evaluating Solid Wastes (SW-846)" (EPA, 1986);

- "Methods for Chemical Analysis of Water and Wastes" (EPA, 1983); and

- "Standard Methods for the Examination of Water and Wastewater, 16th edition, 1985".

INTERNAL QUALITY CONTROL CHECKS

The laboratory QC procedures will consist of the following:

Instrument Calibration

Instrument calibration and standards as defined in the March 1990, EPA CLP SOWs for organic and inorganic analyses (EPA, 1990a; 1990b), except where non-CLP procedures will be used in which case modifications as described in the **ANALYTICAL PROCEDURES** section will apply.

Blanks

Method Blank. Laboratory method blanks will be measured at a minimum of 20 percent or at a frequency of one-per-twenty samples.

Field Blank. One field blank will be collected per sampling event. This blank will assist in identifying any contamination which is a result of ambient field conditions.

Precision and Accuracy

Replicates. Replicate samples will be collected at a frequency of one-per-ten samples.

Precision and accuracy measurements will be as defined in the ***Quality Assurance Objectives*** section. Samples will be collected at a minimum of 10 percent or one-per-ten samples.

Reports

Data reports will include CLP documentation for each analysis as described in the March 1990, EPA CLP SOWs for organic and inorganic analyses (EPA, 1990a; 1990b) or as described in the laboratory QA manual for those methods where CLP procedures have been modified.

For non-CLP procedures, data reports should include necessary information to allow the reviewer to perform a QA review equivalent to a CLP review.

DATA REDUCTION, VALIDATION, AND REPORTING

All data will undergo two levels of quality assurance/quality control (QA/QC) evaluation: one at the laboratory, and one at Hart Crowser.

Initial data reduction, evaluation, and reporting at the laboratory will be carried out as described in the EPA CLP SOWs for inorganic analyses (EPA, 1990) or based on the analytical laboratory in-house protocols when CLP procedures are not used or not defined.

Laucks Laboratory Data Validation

All analysts are required to complete a QC Non-Conformance Memo when analysis concludes. The purpose of the memo is to document either:

(1) That all QC parameters were in control; or

(2) That corrective action has been taken if QC indicators fall outside of control limits.

An in-control analysis requires no further action. A memo noting out-of-control circumstances must be reviewed and initialed by the QC Officer (QCO). The QCO may concur with the corrective actions already initiated by the analyst, or may require that further action be taken. If reanalysis is required, the review process is repeated.

After the QC Non-Conformance Memo has been reviewed and accepted (which may occur after reanalysis), the report of test results, associated QC results, raw data, and QC memos are transferred to the analytical department supervisor for review (gas chromatograph and gas chromatograph/mass spectrometer analyses only) or to the Document Control Group (DCG) for data checking/review (inorganic analyses only). The supervisor or DCG reviewer accepts the data, initialing it, or rejects the data based on criteria such as surrogate and MS/MSD recovery values, data package completeness, calibration, and correctly calculated sample results. If rejected, the data are returned to the analyst via the QCO and reanalysis may be performed.

After the analyst, analytical department supervisor or DCG reviewer, and QCO (if out of control events occurred) have accepted the data, the final report is prepared.

Laboratory data flags, or qualifiers, are applied following EPA CLP protocols for organic and inorganic analyses. These data flags may have different meanings than those commonly employed by non-laboratory data reviewers. The flags are defined in the lab Quality Control manual (Attachment A-5).

Hart Crowser Data Validation

One hundred percent of the analytical data will be validated by a qualified environmental chemist. The CLP organics data will be evaluated in accordance with EPA's Laboratory Data Validation Functional Guidelines for Evaluating Organics Analysis (EPA, 1988a). CLP inorganics data will be validated in accordance with EPA's Laboratory Data Validation Functional Guidelines for Evaluating Inorganics Analysis (EPA, 1988b). Chemical data from non-CLP procedures will be reviewed with regard to the following, as appropriate to the particular analysis.

- Holding times;
- Instrument calibration;
- Blanks;
- Detection limits;
- Surrogate recoveries;
- Duplicates and BS/BSDs;
- Precision and accuracy;
- Completeness; and
- Data report formats.

Detection Limits and Quantitation Limits

In general, detection limits will reflect the lowest levels of analyte that can be accurately and reproducibly detected by the analytical method employed.

Organic Analyses

Data for each target compound generated in accordance with the EPA CLP SOW for organics analyses (EPA, 1990a) will be reported with a Sample Detection Limit (SDL) and a CRQL or Method Detection limit (MDL). MDLs will be reported when CLP CRQLs are not low enough to achieve the project goals. The SDLs and CRQL are defined as follows:

- **SDL.** The SDL is the lowest reproducible concentration at which a chemical can be accurately and reproducibly quantitated for a given sample. The SDL can vary from sample to sample depending on sample size, matrix interferences, moisture content, and other sample-specific conditions.

- **CRQL.** The CRQL is the concentration at which the laboratory must be able to routinely detect and quantitate the target compound in a variety of sample matrices. CRQLs established by the EPA in the CLP SOW for organic analyses (EPA, 1990a) will be used for this work unless modifications to CLP procedures are used in which case the MDL presented in Table A-4-2 will be used where applicable.

SDLs may be adjusted for a specific sample as a result of adjustments to the preparation or analytical method (i.e., sample dilution, sample matrix, or variations in sample mass or volume extracted). CRQLs are not adjusted. Because SDLs take into account sample characteristics (i.e., matrix effects), sample preparation, and analytical adjustments, these values are the most relevant quantitation limit for evaluating non-detected chemicals.

Inorganic Analyses

Data for each target analyte generated in accordance with the EPA CLP SOW for inorganics (EPA, 1990b) will be reported with a SDL and a CRDL or MDL. The CRDL is defined as follows:

- **CRDL.** The CRDL is the concentration at which the laboratory must be able to routinely detect and quantitate the target analyte in a variety of sample matrices. CRDLs established by the EPA in the CLP SOW for inorganics analyses (EPA, 1990b) will be used for this work except for analysis where CLP procedures will not be used, in those cases MDLs listed in Table A-4-2 will apply.

Data Qualifiers

CLP data will be qualified by the laboratory in accordance with CLP laboratory data qualifier definitions for organic and inorganic chemical data (EPA, 1989; 1990a; and 1990b). Additional laboratory data qualifiers may be defined and reported in order to more completely explain the laboratory's QC concerns regarding a particular sample result. All additional data qualifiers will be defined in the laboratory's case narrative reports associated with each case.

Data validation qualifiers will be assigned to reported CLP data results, in accordance with data validation procedures and qualifier definitions outlined in the Laboratory Data Validation Functional Guideline for Evaluating Organics Analyses (EPA, 1988a) and for Inorganics Analyses (EPA, 1988b). Additional data qualifiers may be defined to more fully explain data quality concerns associated with a particular sample result. All additional qualifier definitions will be provided in data validation reports for each case.

All other non-CLP data will be evaluated by the laboratory in accordance with standard EPA or laboratory procedures as appropriate. These data will be evaluated, as appropriate, against control limits established through routine laboratory performance of the methods as presented in Table A-4-3.

PERFORMANCE AND SYSTEM AUDITS

Hart Crowser's project QA manager will monitor the performance of the field and laboratory QA program. This will be achieved through regular contact with the field and analytical QA officers.

Field Performance

Field performance will be monitored through review of sample collection documentation, sample handling records (chain of custody forms), field notebooks, and field measurements.

Laboratory Performance

The laboratory shall maintain records to support an audit of the technical quality of all analyses.

Hart Crowser will be in contact with the analytical laboratory on a weekly basis while samples collected during this investigation are being analyzed. This will allow Hart Crowser to assess progress toward obtaining the Port's data quality objectives and to initiate corrective measures as concerns arise.

Specific corrective actions will depend on the situation. Corrective actions are outlined in each respective EPA CLP SOW or method. EPA must approve all corrective actions and changes to the QA plan.

PREVENTIVE MAINTENANCE

Field Preventive Maintenance

Preventive maintenance of field instruments and equipment will follow manufacturer's specifications. All routine maintenance will be recorded in instrument log books or directly on the instrument as appropriate.

Laucks Laboratories Preventive Maintenance

Preventive maintenance in the laboratory will be the responsibility of the laboratory personnel and analysts. This maintenance includes routine care and cleaning of instruments and inspection and monitoring of carrier gases, solvents, and glassware used in analyses.

Precision and accuracy data are examined for trends and excursions beyond control limits to determine evidence of instrument malfunction. Maintenance will be performed when an instrument begins to change as indicated by the degradation of peak resolution, shift in calibration curves,

decrease in sensitivity, or failure to meet one or another of the QC criteria. Details of the maintenance procedures for Laucks are addressed in the Laucks Testing Laboratories Quality Control Manual (Attachment A-5).

SPECIFIC ROUTINE PROCEDURES TO BE USED TO ASSESS DATA PRECISION, ACCURACY, AND COMPLETENESS

Data assessment will be based on the data quality objectives and will include data validation procedures described previously. The quantitative definitions of precision, accuracy, and completeness are presented in this section.

Precision

The results from organic matrix spikes and matrix spike duplicate analyses will be used to determine the RPD between the pair of analyses. This is a measure of analytical precision and can be calculated as follows:

$$RPD = \frac{(C_1 - C_2)}{(C_1 + C_2)/2} \times 100$$

Where:

RPD = relative percent difference
C_1 = larger of the two observed values
C_2 = smaller of the two observed values

Accuracy

For spiked samples, the percent recovery (%R) can be used as the measure of accuracy as follows:

$$\%R = 100 \times \frac{(S - U)}{C_{sa}}$$

Where:

S = measured concentration in spiked aliquot
U = measured concentration in unspiked aliquot
C_{sa} = actual concentration of spike added

Completeness

Measurement of completeness (C) can be defined as the ratio of acceptable measurements obtained to the total number of planned measurements for an activity. Completeness can be defined as:

$$\%C = \frac{(Data\ within\ QC\ Limits)}{(Total\ Data\ Points)} \times 100$$

CORRECTIVE ACTION

If QC audits result in detection of unacceptable conditions or data, the Hart Crowser's project QA manager in conjunction with the project QA coordinator, will be responsible for implementing, with EPA approval, corrective action. Specific laboratory corrective actions are outlined in each respective EPA CLP SOW or method and include, but are not limited to, the following:

- Identifying the source of the violation;
- Re-analyzing samples if holding time criteria permit;
- Resampling and analyzing;
- Evaluating and amending sampling and analytical procedures;
- Accepting data and flagging to indicate the level of uncertainty; and/or
- Rejecting data.

The Port will take additional non-laboratory corrective action as needed.

QUALITY ASSURANCE REPORTS

After data have been received and evaluated by Hart Crowser, a report summarizing the specific QC checks will be written. This summary will also include:

- Validated data;
- Assessment of measurement data precision, accuracy, and completeness;
- Results of system and performance audits; and

- Significant QA problems and recommended solutions.

This report will be submitted to the project QA Coordinator for final confirmation of the validity of the data.

DELIVERABLES

Laucks will provide the deliverables required for all analyses to enable independent QA/QC review of the data package as specified in their EPA CLP contract. Laucks will also provide Hart Crowser with a computer diskette with the data in a format specified by Hart Crowser.

DATA MANAGEMENT SYSTEM

Rationale

A computer-based data management system will be implemented because of the volume of data that has been generated and is anticipated to be generated for this project. Several sampling and analysis events have taken place previously and already comprise a database for this site. It is important that the data collected in the future be managed in a fashion that increases its output potential and facilitates the evaluation of the data. Therefore, groundwater data will be incorporated into a computerized data management system with the following capabilities:

- Generate rapid reports of chemical and physical information;
- Accommodate additional test data or additional criteria; and
- Provide a data exchange mechanism between other databases and geographic information systems.

The data management system which contains the chemistry data is currently maintained in Paradox 3.5, a relational type database, and is used in conjunction with Quattro Pro 3.0, a spreadsheet database.

Records within these databases contain sample description information and corresponding chemical and physical data. These chemistry records are arranged in the following files:

- Sample Information;
- Grain Size;
- Metals;
- Phenols;
- Low Molecular Weight Polynuclear Aromatic Hydrocarbons;

- High Molecular Weight Polynuclear Aromatic Hydrocarbons;
- Phthalates;
- Pesticides/Polychlorinated Biphenyls;
- Semivolatiles;
- Volatiles; and
- Other.

Queries, updates, deletions, and output file generation can be accomplished with using Paradox commands. New data will be incorporated into the database system once they have been validated.

Electronic data submittals to EPA will be formatted based on the October 21, 1992, EPA document entitled "Instructions for Submitting Data to EPA Region 10 and Ground Water Data Element Descriptions and Definitions."

CONCLUSION

This QAPP was developed to give the objectives, organization, and functional activities associated with the Groundwater Monitoring Program being implemented in the area around the Milwaukee Waterway as part of the Sitcum Waterway Remediation Project. The objectives of the QAPP are to ensure the data collected during the monitoring program is acceptable for achieving the project goals and to collect representative groundwater data that can be compared with historical data and future data collected at the site. This appendix provides the protocol to accomplish these objectives.

320308\OMMP-ATT.A-4

REFERENCES

EPA, 1990a (Revised March 1990). Contract Laboratory Program State of Work for Organic Analyses, Multimedia, Multiconcentration, OLMO1.0.

EPA, 1990b (Revised March 1990). Contract Laboratory Program Statement of Work for Inorganic Analyses, Multimedia, Multiconcentration, TIM01.0.

EPA, 1989. Preparation Aids for the Development of RREL Quality Assurance Project Plans (Pocket Guide). Risk Reduction Engineering Laboratory, Cincinnati, Ohio. EPA/600/9-89087, October, 1989.

EPA, 1988a. Laboratory Validation Functional Guidelines for Evaluating Organics Analysis. Prepared for the Hazardous Site Evaluation Division, United States Environmental Protection Agency (USEPA). February 1, 1988.

EPA, 1988b. Laboratory Data Validation Functional Guidelines for Evaluating Inorganic Analysis. Prepared for the Hazardous Site Evaluation Division, USEPA. July 1, 1988.

EPA, 1987. Data Quality Objectives for Remedial Response Activities. Development Processes. EPA/540/a-7/003.

EPA, 1986. Test Methods for Evaluating Solid Waste. SW-846, 3rd Edition, November 1986.

EPA, 1983. Standard Methods for Chemical Analysis of Water and Wastes.

EPA, 1980. Interim Guidelines and Specifications for Preparing Quality Assurance Project Plans, QAMS-005/80. December 29, 1980. Office of Monitoring Systems and Quality Assurance, Office of Research and Development.

Standard Methods for the Examination of Water and Wastewater, 16th Edition, 1985.

Table A-4-1 - Personnel Responsible for Quality Assurance Activities

Personnel	Responsibilities
EPA Project Manager	Oversee project performance to ensure compliance with Consent Decree.
Port of Tacoma Project Manager	Oversee project team performance to ensure contract compliance. Coordinate Hart Crowser activities to implement required work.
Hart Crowser Project Manager	Oversee project team performance to ensure contract compliance. Implement necessary action and adjustments to accomplish program objectives. Monitor field investigations. Coordinate field and laboratory sample tracking. Coordinate Hart Crowser personnel to implement required work.
Hart Crowser Project QA Coordinator	Provide technical QA assistance. Arrange contract or other external procurement packages for QA Coordinator needs. Coordinate corrective actions. Oversee all contractor QA activities to ensure compliance with contract specifications. Direct implementation of QA contractor plan. Prepare and submit QA project reports to management.
Hart Crowser Analytical QA Officer	Ensure data quality, data validation, and QA information are complete and are reported in the required deliveries format as required from the analytical laboratory. Write QA reports and inform project QA coordinator when problem occurs.
Hart Crowser Project Field QA Officer	Ensure that sample collection, preservation, storage, transport, and chain of custody quality control procedures are followed; inform Project QA Coordinator when problems occur, and communicate and document corrective actions taken.
Laucks Laboratory Project Manager	Oversee laboratory analytical performance to ensure contract compliance. Implement necessary action and adjustments to accomplish analytical project objectives.
Laucks Laboratory QC Officer	Ensure the use of proper analytical procedures as specified in laboratory contract; ensure all quality control indicators are within control limits specified; initiate corrective action.

Table A-4-2 - Analytical Methods and Detection Limit Goals for Groundwater Monitoring Program

Analytes	CLP CRDL/CRQL	Laucks Method Detection Limit		EPA Method
		Fresh	Saline	
Metals in µg/L				
Antimony	60.0	2.5 (1)	250 (2)	CLP 3/90 SOW
Arsenic	10.0	1 - 5	1 - 5	SW 7061
Cadmium	5.0	0.5 (1)	50 (2)	CLP 3/90 SOW
Chromium	10.0	1.0 (1)	100 (2)	CLP 3/90 SOW
Copper	25.0	2.5 (1)	250 (2)	CLP 3/90 SOW
Lead	3.0	1-2	1-2	CLP 3/90 SOW
Mercury	0.2	0.2	0.2	CLP 3/90 SOW
Nickel	40.0	2.0 (1)	200 (2)	CLP 3/90 SOW
Silver	10.0	1.0 (1)	100 (2)	CLP 3/90 SOW
Zinc	20.0	1.0 (1)	100 (2)	CLP 3/90 SOW
Other Inorganic Parameters in mg/L unless noted				
Total Dissolved Solids	NA	2.0	2.0	MC 160.1
Total Suspended Solids	NA	2.0	2.0	MC 160.2
Nitrate + Nitrite - N	NA	0.01	0.01	MC 353.2
Sulfate as SO4	NA	1.0	1.0	MC 300.0
Total Phosphate as PO4	NA	0.01	0.01	MC 365.2
Fluoride	NA	0.2	0.2	MC 340.2
Chloride	NA	10.0	100.0	MC 300.0 #
Ammonia as N	NA	0.01	0.01	MC 350.1
Cyanide	5.0	1.0	1.0	MC 335.3
Sulfide	NA	1.0	1.0	MC 376.1
Total Alkalinity as CaCO3	NA	2.0	2.0	MC 310.1
Bicarbonate Alkalinity as CaCO3	NA	2.0	2.0	MC 310.1
Salinity (parts per thousand)	NA	0.02	0.02	SM 209C
Total Organic Carbon (mg/L)	NA	1.0	1.0	MC 415.2
Specific Conductance (micromhos/cm)	NA	5.0	5.0	MC 120.1
pH (unitless)	NA	0.1	0.1	MC 150.1
Phenols in µg/L				
Phenol	10	1 (3)	1 (3)	CLP 3/90 SOW
4-Methylphenol	10	1 (3)	1 (3)	CLP 3/90 SOW
Pentachlorophenol	50	10 (3)	10 (3)	CLP 3/90 SOW
2-Methylphenol	10	1 (3)	1 (3)	CLP 3/90 SOW
2,4-Dimethylphenol	10	1 (3)	1 (3)	CLP 3/90 SOW
LPAH Compounds in µg/L				
Naphthalene	10	1 (3)	1 (3)	CLP 3/90 SOW
Acenaphthene	10	1 (3)	1 (3)	CLP 3/90 SOW
Fluorene	10	1 (3)	1 (3)	CLP 3/90 SOW
Anthracene	10	1 (3)	1 (3)	CLP 3/90 SOW
2-Methylnaphthalene	10	1 (3)	1 (3)	CLP 3/90 SOW
Acenaphthylene	10	1 (3)	1 (3)	CLP 3/90 SOW
Phenanthrene	10	1 (3)	1 (3)	CLP 3/90 SOW

Table A-4-2 - Analytical Methods and Detection Limit Goals for Groundwater Monitoring Program

Analytes	CLP CRDL/CRQL	Laucks Method Detection Limit		EPA Method
		Fresh	Saline	
HPAH Compounds in µg/L				
Fluoranthene	10	1 (3)	1 (3)	CLP 3/90 SOW
Benzo(a)Anthracene	10	1 (3)	1 (3)	CLP 3/90 SOW
Benzo(b)Fluoranthene	10	1 (3)	1 (3)	CLP 3/90 SOW
Benzo(k)Fluoranthene	10	1 (3)	1 (3)	CLP 3/90 SOW
Benzo(a)Pyrene	10	1 (3)	1 (3)	CLP 3/90 SOW
Dibenzo(a,h)Anthracene	10	1 (3)	1 (3)	CLP 3/90 SOW
Pyrene	10	1 (3)	1 (3)	CLP 3/90 SOW
Chrysene	10	1 (3)	1 (3)	CLP 3/90 SOW
Indeno(1,2,3-cd)Pyrene	10	1 (3)	1 (3)	CLP 3/90 SOW
Benzo(g,h,i)Perylene	10	1 (3)	1 (3)	CLP 3/90 SOW
Chlorinated Aromatic Compounds in µg/L				
1,3-Dichlorobenzene	10	1 (3)	1 (3)	CLP 3/90 SOW
1,2-Dichlorobenzene	10	1 (3)	1 (3)	CLP 3/90 SOW
Hexachlorobenzene	10	1 (3)	1 (3)	CLP 3/90 SOW
1,4-Dichlorobenzene	10	1 (3)	1 (3)	CLP 3/90 SOW
1,2,4-Trichlorobenzene	10	1 (3)	1 (3)	CLP 3/90 SOW
Hexachloroethane	10	2 (3)	2 (3)	CLP 3/90 SOW
Chlorinated Aliphatic Compounds in µg/L				
Hexachlorobutadiene	10	1 (3)	1 (3)	CLP 3/90 SOW
Phthalate Esters in µg/L				
Di-Methylphthalate	10	1 (3)	1 (3)	CLP 3/90 SOW
Di-a-Butylphthalate	10	1 (3)	1 (3)	CLP 3/90 SOW
Bis(2-ethylhexyl)phthalate	10	1 (3)	1 (3)	CLP 3/90 SOW
Di-Ethylphthalate	10	1 (3)	1 (3)	CLP 3/90 SOW
Butylbenzylphthalate	10	1 (3)	1 (3)	CLP 3/90 SOW
Di-n-Octyl phthalate	10	1 (3)	1 (3)	CLP 3/90 SOW
Misc. Oxygenated Organic Compounds in µg/L				
Benzoic Acid	NA	25 (3)	25 (3)	CLP 3/90 SOW
Benzyl Alcohol	NA	1 (3)	1 (3)	CLP 3/90 SOW
Dibenzofuran	10	1 (3)	1 (3)	CLP 3/90 SOW
N-Nitrosodiphenylamine	10	1 (3)	1 (3)	CLP 3/90 SOW
Pesticides/PCBs in µg/L				
4,4'-DDE	0.10	0.10	0.10	CLP 3/90 SOW
4,4'-DDD	0.10	0.10	0.10	CLP 3/90 SOW
4,4'-DDT	0.10	0.10	0.10	CLP 3/90 SOW
Total PCBs	NA	0.05	0.05	

Notes:

(1) Derived from analysis of the CLP 3/90 Inductively Coupled Plasma digest concentrated 10 times for the purpose of achieving lower detection limits.

(2) Derived from analysis of the CLP 3/90 Inductively Coupled Plasma digest, unconcentrated, CLP detection limits have been adjusted upward by a factor of 10 to reflect the need for dilution of the digest due to the matrix. Actual dilution is likely to range between 2 and 10 times so there is a possibility some limits in some samples may be lower than these.

Table A-4-2 - Analytical Methods and Detection Limit Goals for Groundwater Monitoring Program

Notes (continued):

(3) Values are reported as long as spectral confirmation can be made (No J-flags).
(4) The value for analysis of a saline sample by graphite furnace for thallium content is a best approximation.
-- Not determined.
Alternate method MC 325 may be employed.

Acronyms and Abbreviations:

CLP -	Contract Laboratory Program
CRDL/CRQL	Contract Reporting Detection Limit (for inorganics)/Contract Reporting Quantitation Limit (for organics)
Laucks -	Laucks Testing Laboratories
Fresh -	Fresh water
Saline -	Saline water
CLP 3/90 SOW	United States Environmental Protection Agency. 1990, March. Contract Laboratory Program, Statement of Work, for Organic and Inorganic Analyses, Multimedia, multiconcentration, OLM01.0 and ILM01.0.
SW -	EPA, 1986. Test Methods for Evaluating Solid Wastes (SW 846).
MC -	Methods for the Chemical Analysis of Water and Wastes.
SM -	Standard Methods, 16th edition, 1985.
NA -	Not Applicable
mg/L -	milligrams per liter
µg/L -	micrograms per liter
N - Nitrogen	
PO4 -	Phosphate
CaCO3 -	Calcium Carbonate
micromhos/cm -	micromhos per centimeter

Actual Sample Detection Limits may vary from Method Detection Limits depending on the influences of limited sample volume, matrix interferences, blank contamination, and moisture content of sediments.

320308\OMMP-ATT.A-4

Table A-4-3 - Quality Assurance Objectives and Precision of Matrix Spike/Matrix Spike Duplicates for Groundwater Monitoring Program Analytical Methods

Analytes	MS/MSD Percent Recovery	MS/Duplicate Relative Percent Difference	Surrogate Percent Recovery
Metals and Metalloids			
Antimony	75 - 125	20	--
Arsenic	75 - 125	20	--
Cadmium	75 - 125	20	--
Chromium	75 - 125	20	--
Copper	75 - 125	20	--
Lead	75 - 125	20	--
Mercury	75 - 125	20	--
Nickel	75 - 125	20	--
Silver	75 - 125	20	--
Zinc	75 - 125	20	--
Other Inorganic Parameters			
Total Dissolved Solids	--	30	--
Total Suspended Solids	--	30	--
Nitrate + Nitrite - N	51 - 143	15	--
Sulfate as SO4	64 - 130	16	--
Total Phosphate as PO4	58 - 140	30	--
Fluoride	74 - 132	17	--
Chloride	71 - 133	10	--
Ammonia as N	35 - 144	23	--
Cyanide	69 - 133	30	--
Sulfide	50 - 150	30	--
Total Alkalinity as CaCO3	81 - 115	10	--
Bicarbonate Alkalinity as CaCO3	81 - 115	10	--
Salinity (parts per thousand)	--	30	--
Total Organic Carbon (mg/L)	64 - 125	30	--
Specific Conductance (micromhos/cm)	--	30	--
pH (unitless)	--	30	--
Semivolatile Extractable Compounds			
Phenol	12 - 100	42	--
Pentachlorophenol	9 - 103	50	--
Acenaphthene	46 - 118	31	--
Pyrene	26 - 127	31	--
2-Fluorobiphenyl	--	--	43 - 116
Terphenyl-d14	--	--	33 - 141
Phenol-d5	--	--	10 - 110
Pesticides/PCBs			
4,4'-DDT	38 - 127	27	--
Tetrachloro-m-xylene	--	--	60 - 150 (Advisory)
Decachlorobiphenyl	--	--	60 - 150 (Advisory)

Table A-4-3 - Quality Assurance Objectives and Precision of Matrix Spike/Matrix Spike Duplicates for Groundwater Monitoring Program Analytical Methods

Notes:

MS/MSD -	Matrix Spike/Matrix Spike Duplicate
mg/L -	milligrams per liter
µg/L -	micrograms per liter
-- -	Not Applicable
N -	Nitrogen
SO4 -	Sulfate
PO4 -	Phosphate
CaCO3 -	Calcium Carbonate
micromhos/cm -	micromhos per centimeter

320308\OMMP-ATT.A-4

Table A-4-4 - Standard Reference Materials and Frequency of Analyses

Fraction	SRM Catalogue Number	Frequency of Analysis
Mass Spectrometer Base/Neutrals	EPA WP 286	one overall
Mass Spectrometer Acids	EPA GAC 489	one overall
Gas Chromatograph Pesticide/Polychlorinated Biphenols	EPA WP series	one overall
Inductively Coupled Plasm Metals	SPEX ICV-1	one overall
Graphite Furnace Metals	SPEX ICV-1	one overall
Mercury	None Available	Not Applicable
Total Organic Carbon	EPA WP series	one overall
Sulfide	None Available	Not Applicable
Sulfate	APG 4873	one overall
Nitrate + Nitride as Nitrogen	EPA WP series	one overall
Chloride	APG 4873	one overall
Total Phosphate	EPA WP series	one overall
Fluoride	EPA WP series	one overall
Ammonia as Nitrogen	EPA WP series	one overall
Cyanide	EPA WP series	one overall
Alkalinity	APG 4873	one overall
Salinity	None Available	Not Applicable

Note: The availability of Standard Reference Materials are subject to change and specific catalog numbers may vary.

320308\OMMP-ATT.A-4

Table A-4-5 - Sample Containers, Preservation, and Holding Times for Groundwater Samples

Analytes/Tests	Containers	Preservation and Handling	Holding Time
Metals/Metalloids	one, 1-Liter poly bottle	nitric acid (pH < 2)	6 months
Hexavalent Chromium	*four, 1-Liter poly bottle	unpreserved	24 hours
Mercury (Metals/Metalloids)	one, 1-Liter poly bottle	nitric acid (pH < 2)	28 days
Ammonia Total Phosphate Nitrate + Nitride - Nitrogen	one, 1-Liter poly bottle	sulfuric acid (pH < 2)	28 days
Sulfate Fluoride Chloride Specific Conductance	*four, 1-Liter poly bottle	unpreserved	28 days
Sulfide	one, 1-Liter poly bottle	zinc acetate	7 days
Cyanide	one, 1-Liter poly bottle	sodium hydroxide (pH > 12)	14 days
Total Organic Carbon	two, 40-ml glass vials with teflon septa	sulfuric acid	28 days
Total Dissolved Solids Total Suspended Solids	*four, 1-Liter poly bottle	unpreserved	7 days
Alkalinity Bicarbonate	*four, 1-Liter poly bottle	unpreserved	14 days
Semivolatile Organic Compounds Pesticides Polychlorinated Biphenols	four, 1-Liter amber glass bottles with teflon lined caps	unpreserved; store 4°C	7 days/ 40 days after extracted
Total Dissolved Metals	one, 1-Liter poly bottle	nitric acid (pH <2); field filtered	6 months/ 28 days for Hg
Turbidity	*four, 1-Liter poly bottles	unpreserved	48 hours

ml - milliliter
poly - polyethylene bottle
* - same four, 1-Liter poly bottle

320308\OMMP-ATT.A-4

Quality Assurance Program Organization Chart

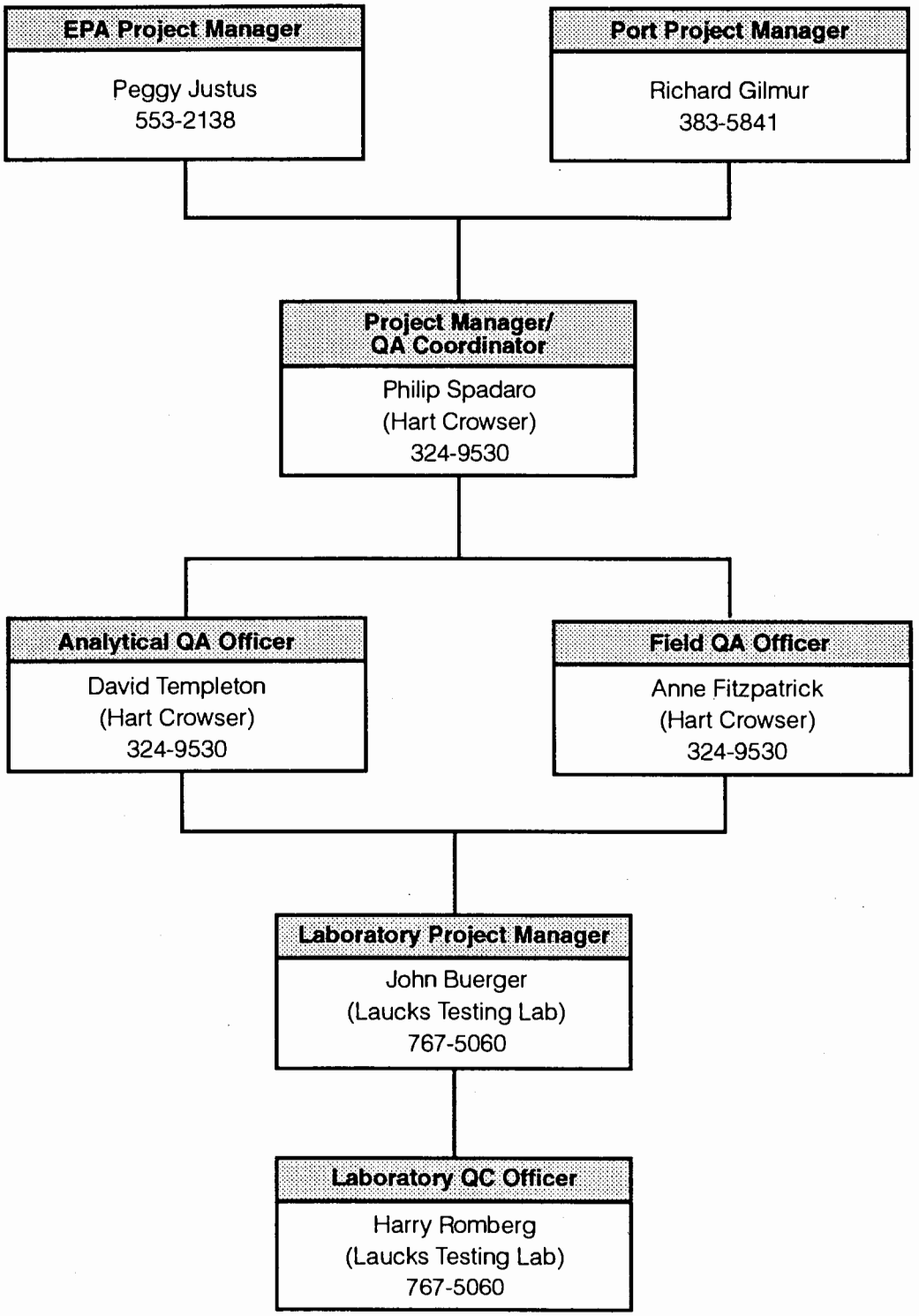

HARTCROWSER
J-3203-08 6/94
Figure A-4-1

Field Groundwater Sampling Data Form

Groundwater Sampling Data

Project _____ Job No. _____

Field Rep. _____ Date _____

WELL NUMBER	DATE SAMPLED	WELL DEPTH IN FEET	DEPTH TO WATER IN FEET	DEPTH TO SEDIMENT IN FEET	SEDIMENT THICKNESS IN FEET	METHOD OF SAMPLING	COMMENTS	T °C	pH	EC IN µMHOS	CASING VOLUME IN GALLONS	PURGE VOLUME IN GALLONS

Hart Crowser, Inc.

HARTCROWSER
J-3203-08 12/92
Figure A-4-2

Field Report Form

HARTCROWSER

FIELD REPORT

Hart Crowser, Inc.
1910 Fairview Avenue East
Seattle, Washington 98102-3699
206.324.9530

Job No. _____
Field Report No. _____
Page _____ of _____
DATE _____
S M T W Th F S

JOB _____ ARRIVAL TIME: _____

LOCATION _____ DEPARTURE TIME: _____

CLIENT _____ WEATHER: _____

PURPOSE OF OBSERVATIONS _____

H-C REPRESENTATIVE _____ H C PROJECT MANAGER _____

CONTRACTOR _____ PERMIT NO. _____

CONTRACTOR REP. _____ JOB PHONE _____

This report presents opinions formed as a result of our observation of the contractor's activities relating to geotechnical engineering. We rely on the contractor to comply with the plans and specifications throughout the duration of the project irrespective of the presence of the Hart Crowser representative. The presence of our field representative will be for the purpose of providing observation and field testing. Our work does not include supervision or direction of the actual work of the contractor, his employees or agents. Neither the presence of our representative nor the observation and testing by our firm shall excuse the contractor in any way for defects discovered in his work. Our firm will not be responsible for job or site safety on this project. The conclusions and recommendations of this field report are subject to review by the Hart Crowser Project Manager.

COMMENTS: _____

BY _____ REVIEWED BY _____ I have read and understand the content of this Field Report

HART CROWSER REPRESENTATIVE _____ HART CROWSER PROJECT MANAGER _____ CONTRACTOR REPRESENTATIVE _____

HARTCROWSER
J-3203-08 12/92
Figure A-4-3

Field Sample Custody Record Form

Sample Custody Record

DATE _____ PAGE _____ OF _____

HARTCROWSER

Hart Crowser, Inc
1910 Fairview Avenue East
Seattle, Washington 98102-3699

JOB NUMBER _____ LAB NUMBER _____

PROJECT MANAGER _____

PROJECT NAME _____

SAMPLED BY:

LAB NO.	SAMPLE	TIME	STATION	MATRIX	TESTING	NO. OF CONTAINERS	OBSERVATIONS / COMMENTS / COMPOSITING INSTRUCTIONS

RELINQUISHED BY	DATE	RECEIVED BY	DATE
SIGNATURE	TIME	SIGNATURE	TIME
PRINTED NAME		PRINTED NAME	
COMPANY		COMPANY	
RELINQUISHED BY	**DATE**	**RECEIVED BY**	**DATE**
SIGNATURE	TIME	SIGNATURE	TIME
PRINTED NAME		PRINTED NAME	
COMPANY		COMPANY	

TOTAL NUMBER OF CONTAINERS

METHOD OF SHIPMENT

SPECIAL SHIPMENT / HANDLING OR STORAGE REQUIREMENTS

DISTRIBUTION:

1. PROVIDE WHITE AND YELLOW COPIES TO LABORATORY
2. RETURN PINK COPY TO PROJECT MANAGER
3. LABORATORY TO FILL IN SAMPLE NUMBER AND SIGN FOR RECEIPT
4. LABORATORY TO RETURN WHITE COPY TO HART CROWSER

Custody Seal

CUSTODY SEAL CUSTODY SEAL CUSTODY SEAL CUSTODY SEAL

Date_____ Initials_____

HARTCROWSER
J-3203-08 12/92
Figure A-4-5

Sample Identification

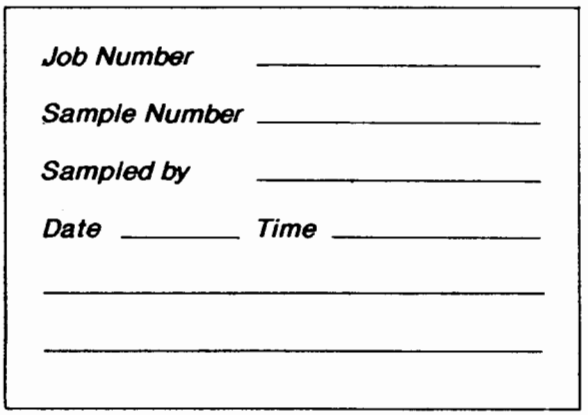

HARTCROWSER
J-3203-08 12/92
Figure A-4-6

Port of Tacoma
June 3, 1994

ATTACHMENT A-5
LAUCKS TESTING LABORATORIES
QUALITY CONTROL MANUAL

LAUCKS TESTING LABORATORIES

QUALITY CONTROL MANUAL

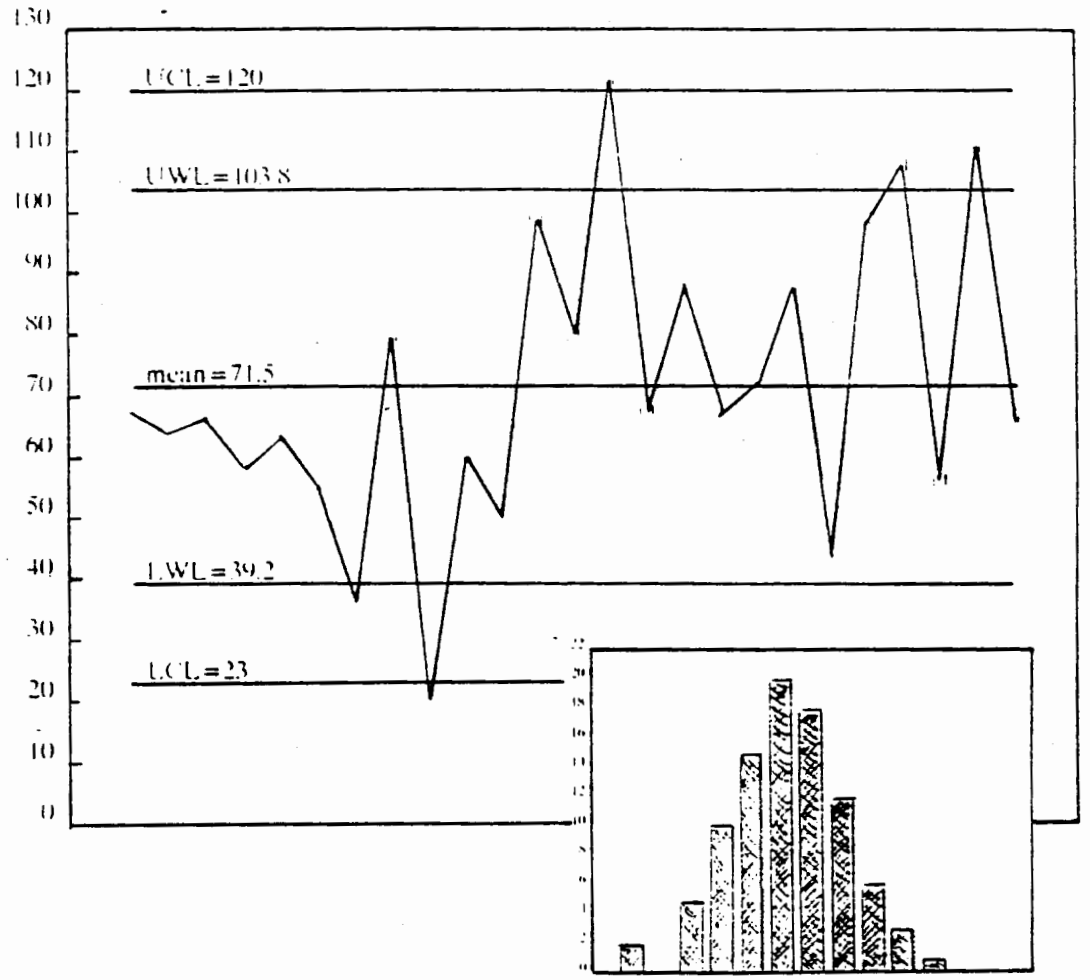

Laucks Testing Laboratories, Inc

940 South Harney Street

Seattle, Washington 98108

(206) 767-5060

FAX (206) 767-5063

QUALITY ASSURANCE POLICY

Laucks has set as one of its goals meeting the need to define and determine data quality. To this end, the management is dedicated to the encouragement of excellence in measurement and to provide the physical and mental environment conducive to its achievement. This involves staffing at a high level of professionalism and investment in state-of-the-art equipment. The use of approved methodology, appropriate calibration standards, and strict adherence to standard operating procedures are mandated by the laboratory management. With this combination of policies, Laucks seeks to assure the client that the final report will reflect the best "true value" for a given analyte.

James M. Owens
President

3-1-94
Date

John Buerger
Laboratory Director

2/28/94
Date

Mike Nelson
Chief Chemist

2/28/94
Date

Harry Romberg
Quality Control Officer

2-28-94
Date

Published: May 1987
Revised: May 1988
January 1991
Cover Page Revised 2/28/94

Corporate Ethics Policy

All staff members at Laucks must agree that it will be their policy to abide by the following code of ethics.

- To cooperate in elevating and maintaining the professional status of our laboratory.
- To deal openly, honestly and fairly in all relationships with clients, the public and fellow staff members.
- To report only clear and reliable data to clients.
- To refrain from intentional and improper manipulation or falsification of data or unauthorized deviations from contractual requirements.

Improper or dishonest actions will not be tolerated at Laucks. Immediate termination may result for anyone altering data or trying to conceal poor data or mistakes.

Analytical judgment can be used to interpret results but changing things that are true and correct will not be tolerated. Typical examples of altering data could include:

- Falsifying holding times in extraction or analysis.
- Back-dating of computers or instruments.
- Changing numbers to make things look good.

If something goes haywire, and sometimes it will, bite the bullet and tell the truth. This applies to all situations, even when re-analysis is required and when the lab faces client wrath or serious monetary penalty for lateness.

If there is ever a question on whether an action is appropriate or not, you should first speak to the QA/QC Officer. If the question is still not resolved, the Technical Director and Laboratory Director should be brought into the discussion.

Remember that a single dishonest act can cast suspicion on the lab and everyone who works here. No amount of corrective action or quality control can erase the doubts of clients or potential clients who depended upon the honesty of their lab and have been deceived.

TABLE OF CONTENTS

SECTION 1 - QUALITY ASSURANCE PROGRAM

Purpose ..... 1 - 1
Scope ..... 1 - 1
Responsibilities ..... 1 - 1
General ..... 1 - 3
Laboratory Description ..... 1 - 3
Security ..... 1 - 3
Confidentiality ..... 1 - 3
Methodology ..... 1 - 4
Inorganic Water Analysis ..... 1 - 4
Organic Analysis ..... 1 - 4
Foods/Feeds ..... 1 - 5
Oils/Materials Testing ..... 1 - 5
Non-Standard Test Methods ..... 1 - 5
Lab Safety ..... 1 - 5
SOPs and Other Documents ..... 1 - 6
Laboratory Accreditation ..... 1 - 6

SECTION 2 - LABORATORY RESOURCES

General ..... 2 - 1
Physical Description ..... 2 - 1
Electrical Services ..... 2 - 1
Illumination ..... 2 - 1
Natural Gas ..... 2 - 2
Water ..... 2 - 2
Hoods/Exhaust Systems ..... 2 - 3
Compressed Air ..... 2 - 3
Vacuum ..... 2 - 3
Safety Equipment ..... 2 - 3

SECTION 3 - CHEMICAL REAGENTS, SOLVENTS, AND GASES

General ..... 3 - 1
Grades ..... 3 - 1
Standards ..... 3 - 1
Storage ..... 3 - 1
Blanks ..... 3 - 1
Reagent Chemicals ..... 3 - 2
Solvents ..... 3 - 2
Compressed Gases ..... 3 - 3

SECTION 4 - INSTRUMENTATION AND EQUIPMENT

Maintenance Manuals ..... 4 - 1
Service Engineer Calls ..... 4 - 1
Instrumentation ..... 4 - 1
Calibration ..... 4 - 1

SECTION 5 - STAFF QUALIFICATIONS AND TRAINING

General ..... 5 - 1
Personnel ..... 5 - 1
Staff Qualifications and Training ..... 5 - 2
Organization ..... 5 - 2

SECTION 6 - SAMPLE ENTERING, DATA HANDLING, AND REPORTING

General ..... 6 - 1
Data Tracking ..... 6 - 1
Computerized Sample Entry ..... 6 - 1
Sample Storage ..... 6 - 2
Task Assignments ..... 6 - 2
Data Handling ..... 6 - 3
Data Archiving ..... 6 - 7
Sample Disposal And Archiving ..... 6 - 7

SECTION 7 - QUALITY ASSESSMENT TECHNIQUES

General ..... 7 - 1
Control Limits ..... 7 - 1
Surrogate and Spike Recovery and RPD Control Limit Generation ..... 7 - 2
Duplicate Control Limits ..... 7 - 3
Standard Reference Material Control Limits ..... 7 - 3
Blank Control Limit Generation ..... 7 - 4
Control Charts ..... 7 - 4
Corrective Actions ..... 7 - 5

SECTION 8 - CONTROL OF TEST PROCEDURES

Control Of Test Procedures ..... 8 - 1
Sample Containers ..... 8 - 1
Standard Curves ..... 8 - 2
Minimum QC Check In Each Analytical Run ..... 8 - 2
Interlaboratory QC ..... 8 - 3
Field Sampling ..... 8 - 3
Holding Times ..... 8 - 4

SECTION 9 - INTERNAL QA PROGRAM AND AUDITING

Responsibilities ..... 9 - 1
Auditing ..... 9 - 1

SECTION 10 - INSTRUMENT CALIBRATION

Introduction and Scope ..... 10 - 1
Instrument Calibration ..... 10 - 1
General Laboratory Instruments ..... 10 - 1
Major Inorganic Laboratory Instruments ..... 10 - 2
Major Organic Laboratory Instruments ..... 10 - 8
GC/MS analyses ..... 10 - 8
Tuning and GC/MS Calibration ..... 10 - 10
Gas Chromatography ..... 10 - 12
Detection Limits ..... 10 - 14

GLOSSARY

APPENDIX A - Organization Chart

APPENDIX B - Sample Preservation And Holding Times

APPENDIX C - Personnel And Equipment

APPENDIX D - SOP And Method Lists

APPENDIX E - Corrective Actions Forms

APPENDIX F - r_{test} Method And Tables

INDEX

SECTION 1

QUALITY ASSURANCE PROGRAM

1.1 PURPOSE - Quality assurance activities should be perceived as useful and not as punitive measures. They can and should enhance the quality of outputs and provide the basis for their evaluation.

The purpose of this document is to formalize the quality assurance practices that have been developed and are established to guide the staff in the production of quality outputs and to inform users of the laboratory services and overall QA program.

1.2 Guidelines established within this publication are, in several instances, a brief summary of more specific documents kept on file with the Quality Control Officer. Copies of these more specific Standard Operating Procedures (SOPs) and Methods are available to analysts and other appropriate individuals or agencies. A directory of currently published procedures is contained in Appendix D of this manual.

1.3 SCOPE - This manual covers all operations of the testing laboratory dealing with chemical analysis. With limited exceptions, microbiological analysis requirements and quality control measures are addressed in a separate document.

1.3.1 The responsibility to update, produce and distribute this manual rests with the Laboratory Director and the Quality Control Officer. Review and possible revisions will occur approximately annually. Minor revisions may be made at any time. When major changes or additions occur or when sufficient minor changes have occurred to warrant it, a revised edition of the manual will be initiated. All staff using this manual are encouraged to make written suggestions as to improvement in QC procedures.

1.3.2 This manual does not detail all activities associated with Project Specific Plans. Detailed instructions for the performance of all aspects of a specific measurement program are compiled as required.

1.4 QA PROGRAM RESPONSIBILITIES - Responsibility for the proper operation of the QA program rests at all levels. The data quality chain is only as strong as its weakest link.

Individuals.....It is the responsibility of each person to support the QA program in principal and detail. Each person is responsible for the technical quality of her/his work. All work must be done with the highest level of integrity and professional competence. Each member must be ever alert to problems or sources of error that could compromise the quality of technical work.

Lab Director, Chief Chemist and Supervisors .....Management has the responsibility for supervising and administering the quality assurance program and providing an environment in which quality work can be produced. It is their responsibility that all quality assurance requirements of clients or sponsors are strictly followed.

Quality Control Officer.....The Quality Assurance director provides an ongoing supervision of the program and reports to management on any actual or perceived problems. She/he periodically reviews the program and make recommendations for its improvement. She/he serves as the focal point for quality assurance in dealings with clients and governmental agencies.

1.4.1 Additionally, each individual is required to adopt as a part of their work principles the following code of laboratory ethics:

- 1. Acquire a full understanding and develop peer technical expertise in every area of analytical chemistry in which professional services are offered or in which they are expected to perform.
- 2. Comprehend, to the extent possible, all problems for which analytical services are required: ascertain the validity of the approach selected; understand any limitations on the measurements and discuss them with supervisors and/or clients as appropriate.
- 3. Use validated methodology exclusively.
- 4. Demonstrate statistical control of the measurement system before definitive measurements are made.
- 5. Calibrate, to the extent necessary and possible, and engage in intercalibration activities as appropriate to minimize chance of internal laboratory bias.
- 6. Utilize recognized Good Laboratory Practices (GLPs) and Good Measurement Practices (GMPs) throughout all aspects of sampling and measurement processes.
- 7. Utilize documented procedures (SOPs and Methods) and record all significant experimental details in such a way that the measurements could be interpreted or reproduced by a competent analyst at a later date as necessary.
- 8. Provide or make available limits of uncertainty of all data reported, including that due to the sample and to measurement, supported by statistical inference and/or professional judgment as pertinent; state clearly the basis for any interpretations provided of the measurement data.

- 9. Confirm the qualitative identification of all parameters measured and provide supporting evidence as necessary.
- 10. Retain all samples, data, and documentary evidence as necessary for a period of time commensurate with their importance and with routine laboratory practice.

1.5 GENERAL ASPECTS - With the acquisition of quality control data, the decision making process with regard to the question "Are these good data?" is greatly simplified. Analysts need only refer to previously compiled guidelines. The client also has greater assurance that the final report reflects the best "true value" for a given analyte. In addition, the analyst's productivity can be optimized because rechecks performed are those based on statistical evidence. The purpose then is two-fold. It enables the analyst to make objective, statistically-based decisions on the quality of the data produced and it enables the client to be assured that the generated data are sound.

1.6 LABORATORY DESCRIPTION - Laucks Testing Laboratories Inc. is a privately owned corporation located in two facilities at 921 and 940 South Harney Street in Seattle, Washington. The "921" building includes an organic extractions lab, while "940" houses all inorganic functions, organic analyses, and offices. A fully staffed and certified microbiology lab is also located at "921". This laboratory maintains separate quality control procedures which are not discussed in this document. The facilities contain over 22,000 square feet of laboratory, office, and storage space. Laucks offers services in the following areas:

Environmental	Food-Dairy Products	Hazardous Waste
Agricultural	Inorganic	Characterization
Organic	Fuels	Bioassay

Sampling, inspections, weighing and certification are also included in the services Laucks offers.

1.7 SECURITY - Laucks is capable of maintaining a strict chain-of-custody process. Sample receipt, storage, analysis and reporting of results in accordance with EPA CLP standards is available on request. Both laboratories maintain controlled physical access.

1.8 CONFIDENTIALITY - The laboratory maintains confidentiality of client identification, project scope, and analytical data as standard operating procedure. Formal confidentiality agreements are available to prospective clients as required.

1.9 METHODOLOGY - This manual does not deal with analytical methods in detail. All protocols are documented in suitable detail in written form in the varied procedures which are used in the laboratory. However, several references are used routinely for many tests performed in the lab. Tests performed for regulatory or similar requirements will be performed using a validated method from one of the following listed sources or from another source appropriate to the analysis at hand and acceptable to the parties involved:

- U.S. Environmental Protection Agency (USEPA)
- Standard Methods for the Examination of Water and Wastewater
- Association of Official Analytical Chemists (AOAC)
- American Society for Testing and Materials (ASTM)

1.9.1 Some analyses may require methodology from publications other than the above list. Only methods documented by officially recognized bodies for the analysis concerned will generally be used. Other methods may be used but documented comparability to a recognized method is required. Analysts are expected to remain current with methodology changes and to be familiar with reference resources available in our library. Deviations from written, accepted methods require prior approval by the client.

1.9.2 Laucks provides bench manuals which condense the more frequently used procedures into one volume. These manuals are reviewed annually or whenever a new edition of an appropriate publication becomes available to keep them current.

INORGANIC ANALYSIS.....The main resources are Standard Methods, Test Methods for Evaluating Solid Waste (SW-846), and the EPA manual Methods for Chemical Analysis of Water and Wastes. The most recently published edition will be used. Other methods are provided by publication in the Federal Register, the Code of Federal Regulations (40 CFR), and ASTM.

ORGANIC ANALYSIS.....Standard Methods, Test Methods for Evaluating Solid Waste (SW-846), and EPA's Methods for Organic Chemical Analysis of Municipal and Industrial Wastewater provide methods for many analytes in water and soil. The Federal Register and the Code of Federal Regulations (40 CFR), have much published information about methods to be used for the analysis of environmental samples. The National Institute for Occupational Safety and Health (NIOSH) manual provides information for the analysis of industrial hygiene samples. The Food and Drug Administration's Pesticide Analysis Manual (PAM) provides information for the analysis of pesticide residues in crops.

FOODS/FEEDS .....The primary source of analytical methodology will be the most current AOAC. Other sources such as ASTM may be used.

OILS/MATERIALS TESTING.....American Oil Chemists Society (AOCS), AOAC, and ASTM will be the primary resources for this work.

1.10 NON-STANDARD TEST METHODS - Whether due to rapid change in state-of-the-art technology or the requirement to test for analytes not included in standard references, it is sometimes more desirable to modify existing methodology or develop new methods. Each time such modifications are made, it is necessary to document the accuracy and precision of the new or altered procedure.

1.10.1 To initially validate a procedure the Chief Chemist and/or Quality Control Officer must develop a study outline to evaluate the precision and accuracy of the method. The exact nature of the validation is dependent on the nature of the analysis but is, in general, a two-step process. The first step is the determination of the sensitivity of the measurement system through the repetitive analysis of low-concentration standards. The second step is to analyze no less than seven matrix spike samples to determine the method detection limit. The values of percent recovery and standard deviation should meet or exceed those found in a standard test method for the same analyte(s) in a comparable matrix.

1.10.2 Continuing performance evaluation are dependent on analytical spike recoveries, surrogates, reference samples and/or other measurable parameters, as defined by the method. Default performance criteria are used until sufficient determinations have been performed to set statistical control limits.

1.10.3 After data review the Chief Chemist and/or Quality Control Officer will summarize the results and submit findings to the Lab Director for final approval. Results of the validation procedure are maintained in files kept by the Quality Control Officer and are available for review by both analysts and clients.

1.11 LAB SAFETY - Laucks has a comprehensive document which deals with the most common safety hazards associated with operations performed in the lab. This document is provided to all staff members on their first day of employment and updates are regularly provided to all staff members. After one month or less of employment, each staff member is required to take a safety quiz to make sure they have read and understood most of the issues presented and have a reasonable understanding of safe laboratory practices. Laucks also supports a five member safety committee which consists of two management members and three staff members (analysts). This committees' duties are fully described in the safety manual. Safety is of primary importance in the laboratory and Laucks makes every effort to comply with and in some instances exceed all regulations and to maintain an active safety program. All analysts are expected to observe laboratory safety requirements, make themselves familiar with safety issues, particularly within their work areas, and are encouraged to report potential safety hazards.

1.12 SOPS and OTHER DOCUMENTS - The objective of a Standard Operating Procedure (SOP) is to eliminate the differences by which an operation is completed. Documentation of in-house procedures eliminate the "Oral Tradition" by which an operation is handed down through generations of analysts (usually not unchanged). Laucks maintains a growing library of SOPs and methods which include method and bench manuals. These are reviewed approximately annually to insure the document(s) accurately reflects procedures currently in place. Lists of current SOPs and methods appear in Appendix D of this manual.

1.13 LABORATORY ACCREDITATION - Laucks Testing Laboratories, at the time of this publication, holds accreditations from the following agencies;

- Washington State Department of Ecology, wastewater (certification No. C030)
- Washington State Department of Health, drinking water (No. 81)
- State of Alaska Department of Environmental Conservation, drinking water
- U.S. Air Force Hazardous Waste Remedial Action Program (HAZWRAP)
- U.S. Navy Installation Restoration Program (IRP), Naval Energy and Environmental Support Activity (NEESA)
- American Oil Chemists Society (AOCS), fish meal series
- U.S. Department of Agriculture (USDA) & FSIS, PCBs and meats

1.13.1 It should be noted that many of the above agencies accredit for a variety of analytes and/or methodologies on an individual basis. Particularly in the area of environmental analysis, the laboratory makes every effort to obtain most of the available certifications for methods performed. For specific areas of accreditation by the appropriate agency, further information is available in files maintained by the QCO. These specific areas of accreditation may vary over time, either increasing or decreasing, at the discretion of the laboratory or the accrediting agency.

SECTION 2

LABORATORY RESOURCES

2.1 GENERAL - Quality laboratory data result when the many constituents which contribute to the final result are maintained at the highest level. This chapter describes what is done to maintain the quality of support services in laboratory operations.

2.2 PHYSICAL DESCRIPTION - Laucks Testing Laboratories, Inc. consists of two separate laboratory buildings plus three detached storage buildings. The main lab is located at 940 South Harney and the organic extractions lab is located at 921 South Harney. The physical data on both are as follow:

	Bldg 940	Bldg 921
Building (gross)	15,000 ft^2	5,000 ft^2
Bench Space (linear)	820 ft	380 ft
Hood Space	230 ft^2	83 ft^2
Sample Storage (4° C)	1024 ft^3	1152 ft^3

Additional Storage Buildings approx. 3000 ft^2 (1000 ft^3 refrigerated)

2.2.1 Laucks also maintains a mobile lab capable of being modified for many on-site analyses, depending on need and practicality.

2.2.2 All efforts are made to evaluate the space necessary for the addition of new equipment/personnel and space provided accordingly.

2.2.3 Proper housekeeping and organization are practiced by all staff members. The laboratory is kept free from environmental contamination to avoid contaminating samples or introducing background artifacts.

2.3 ELECTRICAL SERVICES - All electrical outlets are of the 3-wire grounded type. Services of 110-volt and 220-volt single and three phase are available for laboratory equipment.

2.3.1 All instrumentation is operated on electrical circuits with isolated grounds. Each instrument is operated on a single circuit where required. Those instruments requiring voltage regulation are provided with voltage regulators. The GC/MS systems are provided with buck-boost transformers and line power conditioning for adequate and stable voltage.

2.4 ILLUMINATION - Lighting in work areas is 50-100 fc.

2.5 NATURAL GAS - Natural gas is available in the laboratory for use with burner devices.

2.6 WATER - All sinks in the laboratory are supplied with hot and cold city-supplied water. This portion of the water supply is isolated from the water supply for the remainder of the laboratory.

2.6.1 Reagent water is produced in the laboratory by a deionizing system consisting of two mixed bed deionizers, one carbon bed, and one colloid removal bed. The water is polished by a 0.2u filter before being delivered to bench locations by a PVC plastic plumbing system.

2.6.2 Reagent water is checked monthly and must meet the following minimum specifications for Type III or better as outlined in ASTM D1193-77 (vol. 11.01) and more stringently modified:

Conductivity, less than 1.0 umho/cm
Total Matter, less than 1.0 mg/L
Soluble Silica, less than 10 ug/L
Ammonia, less than 100 ug/L
Non-Purgeable Organic Carbon, less than 1.0 mg/L

NOTE: Organic carbon is checked instead of the potassium permanganate color retention test. The limit has been established based on in-house measurements.

2.6.3 Reagent water is checked semi-annually to meet the following specifications:

Total Heavy Metals, less than 100 ug/L
Arsenic, less than 5 ug/L
Barium, less than 2 ug/L
Cadmium, less than 1 ug/L
Chromium, less than 1 ug/L
Iron, less than 50 ug/L
Lead, less than 5 ug/L
Manganese, less than 1 ug/L
Mercury, less than 1 ug/L
Selenium, less than 5 ug/L
Silver, less than 1 ug/L
Zinc, less than 5 ug/L
Copper, less than 1 ug/L
Nickel, less than 1 ug/L
Chloride, less than 1 mg/L
Sulfate, less than 1 mg/L
Fluoride, less than 0.2 mg/L
Nitrate, less than 0.2 mg/L

2.6.3.1 Since method blanks are analyzed with every batch of samples the above-mentioned metals are thus measured at a much higher frequency than semi-annually.

2.6.4 The pressure drops across the filters are checked and logged weekly. The filters are changed when the pressure drop exceeds 20 psi. Filter changes are recorded in the reagent water notebook.

2.6.5 The results of all checks are recorded in the reagent water logbook. Any maintenance performed by Continental Water Conditioning is recorded in the logbook. This would include all changes of resin and filter beds.

2.6.6 Tell-tale lights for conductance are checked weekly and resin beds exchanged when the light goes out. The specific conductance should also be checked when the light is out to determine the reliability of the warning system.

2.7 HOODS/EXHAUST SYSTEMS - Hoods are located away from areas where drafts could interfere with their proper operation. Hoods are operated at a minimum of 50 ft/min. Hood flows are checked semi-annually and each hood labeled with flow and date of check. This information is summarized in a logbook specifically for that purpose.

2.7.1 The following items of equipment are supplied with exhaust hoods or hood space:

Muffle furnaces
Hot plates
Steam baths
AA and ICP instruments
Diazomethane Derivatization
Majonnier fat extractions
Blow-down area for organic extractions
Soil screening
PCB oils preparation
Kuderna-Danish concentrators
Organics glassware wash sink
Drying Ovens (as required)

2.7.2 Additionally, sufficient hood space is available to perform analytical work generating noxious or toxic fumes. A water-operated fume scrubbing system is used for the Kjeldahl digesters.

2.8 COMPRESSED AIR - House compressed air is supplied by a Beil and Gussett "Oil-less" air compressor. It is filtered to remove water and oil before use. Pressure is regulated to 50 psi.

2.9 VACUUM - Vacuum can be provided at each sink by the use of a water aspirator. Additional sources of vacuum are provided by small vacuum pumps operated in specific areas as needed. The GC/MS systems have their own dedicated rough pumps.

2.10 SAFETY EQUIPMENT - The laboratory is equipped with extensive safety equipment including (but not limited to) safety showers, eyewashes, and class ABC fire extinguishers. Emergency spill response materials and other safety equipment consistent with each procedure are available to all operators. Use of this equipment is covered in the safety manual.

This page intentionally left blank.

SECTION 3

CHEMICAL REAGENTS, SOLVENTS, AND GASES

3.1 GENERAL - This section details some of the measures analysts must follow to preserve the quality of data generated using these materials. No attempt will be made to enumerate all the precautions required to ensure proper selection, preparation, and storage of reagents, solvents, and gases. Instead these instructions are to keep the analyst conscious of the necessity of maintaining their integrity.

3.2 GRADES - Chemical reagents, solvents, and gases come in many grades from technical grade to ultra-pure. The grade required depends on the test performed. Most inorganic analyses can be performed satisfactorily with reagent grade (AR) chemicals, while some trace organic analyses require the highest purity available. Every analyst should ensure that his/her reagents match the needs of the procedure.

3.3 STANDARDS - Reagents must be prepared and standardized with the utmost care against reliable primary standards. Close attention should be paid to their stability and condition. The analyst must be aware of any precipitation, crystallization, or discoloration. The standards are checked periodically throughout their life for degradation. Standards must be properly labeled and logged as to analyte(s), concentration, date of preparation and name of the preparer. Logbooks are provided in the various work areas for this purpose.

3.3.1 Primary standards are obtained from reliable sources and prepared with calibrated glassware. They are stored in a manner consistent with paragraph 3.4.

3.3.2 The deionized water used to prepare reagents must be free from measurable levels of the analytes in question. This is checked through the analysis of method blanks. If the method blank is more than two times the method detection limit (5 times for iron and zinc), the cause must be determined and corrective action taken to remove or reduce contamination.

3.4 STORAGE - All reagents and solvents are stored in a manner consistent with maintaining their integrity. Any light sensitive chemicals are stored in dark glass and/or in a light-limited environment. Any chemical requiring refrigeration is so treated. All standards are kept tightly closed in storage to avoid concentration changes due to solvent evaporation or contamination due to volatile migration.

3.5 BLANKS - All reagent chemicals and solvents are checked to determine if their use would interfere with the determination of a given set of analytes. This is done through the analysis of reagent and method blanks, prepared and analyzed simultaneously with samples and in identical fashion.

3.5.1 The reagent blank measures the background of the reagents and solvents used in an analysis. If the reagent or solvent is found to contain substances which interfere with a given test, it must be treated or replaced with a satisfactory substitute. This determination is made at the time the solutions or solvents are put in the laboratory system.

3.5.1.1 Where large volumes of a given solvent are routinely used in the laboratory, such as the methylene chloride used as the major solvent in most organic extractions, reagent blanks are analyzed on a given manufacturers lot and a large portion of that lot sequestered either in the laboratory or by the supplier for later use. A laboratory SOP exists which more fully describes the process of what and how blank analysis is performed.

3.5.2 The method blank measures the cumulative interferences in an analysis. Method blanks are analyzed at least at a frequency of 1 per 20 samples, or one per each analytical batch of fewer than 20 samples, whichever is more frequent.

3.6 REAGENT CHEMICALS - All chemicals will be dated when received and when opened. At least annually, the chemical stockroom contents will be checked and determinations made on out-of-spec chemicals. Old chemicals will be disposed of periodically. The smallest quantity of chemical needed for a given analysis should be purchased to minimize disposal.

3.6.1 All acids are to be analytical reagent (AR) grade as a minimum. Certain trace metal applications may require the use of ultra-pure or analyzed grade. Ammonium hydroxide will also be AR grade.

3.7 SOLVENTS - For organic residue work, pesticide grade solvents will be used. A method blank will be analyzed with each lot of solvent and the results will be recorded. Other grades of solvents may be required for special applications, such as electronic grade for the cleaning of the MS source. Solvent of lower purity than pesticide residue grade may be used for other work if the analysis of a method blank results in no analyte artifacts or interfering compounds.

3.8 COMPRESSED GASES - The following grades of gases will be used:

Analysis	Gas	Grade
AA Fuel	Acetylene	Welders Grade
AA Oxidant	Nitrous Oxide	Medical Grade
	Compressed Air	House, Filtered for Oil and Water
AA Graphite Furnace	Argon	Welders Grade
TOC,TOX	Oxygen	Welders Grade
GC	Hydrogen	Ultra-Pure
	Helium	Ultra-Pure
	Air - FIDs	Breathing Air
	Air - Pneumatics	House, etc.
	Nitrogen	Water Pumped
	Argon/Methane	Special Mix
GC/MS	Helium	Ultra-Pure
	Carbon Dioxide	Welders Grade
	Air - Pneumatics	House, etc.
ICP	Argon	Welders Grade
	Nitrogen	Water Pumped
	(both gasses generally used in cryogenic form)	
Lachat Ion Analyzer	Helium (purge gas)	any
Extractions (extract blow-downs, etc.)	Nitrogen	cryogenic, dry
GPC	Nitrogen	dry

This page intentionally left blank.

SECTION 4

INSTRUMENTATION AND EQUIPMENT

4.1 MAINTENANCE LOGS - All instruments have maintenance logs. These logbooks cover routine maintenance items which the operators perform on the schedules established in the manual or recommended by the manufacturer. Maintenance intervals are daily, weekly, monthly, semi-annually, or annually depending on the task performed. The operator performing a specific maintenance task will detail any problems and corrective actions and initial/date the entry. Logbooks will be audited at least semi-annually to ensure that all maintenance items are being properly documented.

4.2 SERVICE ENGINEER CALLS - The telephone number to the appropriate service engineer will be readily available to the analysts. This number will be called as required to have service-related questions answered. If it has been determined that a visit by a service engineer is required, this should be approved by the Chief Chemist, Laboratory Director or appropriate supervisor before the call is placed. All visits by service engineers, and actions taken, must be recorded in the maintenance manual, preferably enhanced by keeping a photocopy of the signed service order.

4.3 INSTRUMENTATION - The electronic and/or mechanical instruments used in the generation of data are operated and maintained in such a manner as to ensure production of accurate results. A list of major and minor equipment is kept and updated periodically to reflect the laboratories capability (a copy can be found in Appendix C).

4.4 CALIBRATION - Calibration is a broad term which as a rule means the comparison of an unknown quantity against a known quantity. Analytically, it is most often considered to be the correlation of response to known concentration. Regardless of the exact definition we use, the need for calibration is essential to all laboratory measurements. Any instruments used to generate data must be calibrated to assure that their accuracy is within acceptable limits. The calibration must be done with appropriate standards. The laboratory assures that the proper standard is used to meet the requirements of the test. The frequency of calibration is determined by several factors (instrument stability, accuracy of data required, methodology employed). Calibration schedules are determined around a nominal period and increased/ decreased to fit the requirements of a given test. The calibration schedule is always biased to the increased side.

4.4.1 Section 10 details the calibration requirements of several major pieces of instrumentation.

This page left intentionally blank.

SECTION 5

STAFF QUALIFICATIONS AND TRAINING

5.1 GENERAL - The reporting of reliable quantitative data is dependent upon the conscientious effort of everyone who has any involvement with the service. Therefore it is important that each member of the organization has a clear understanding of his or her duties and responsibilities and their relationship to the total effort. The management of the laboratory has a prime responsibility in defining policy goals in this relationship for the individual staff member.

5.2 PERSONNEL - Laucks seeks to hire the most qualified staff members, develop their current skills, and help them acquire new ones.

5.2.1 All the analytical staff applicants are required to take a diagnostic quiz to evaluate their working knowledge of simple laboratory calculations. The overall best applicants are then interviewed by a group leader to further gauge their suitability for the available position. The group leader then brings his/her recommendation before the Lab Director, who makes the final decision. In some instances, the decision making process may be supplemented by an interview with the Lab Director and/or Chief Chemist.

5.2.2 Job descriptions are available for all analytical and office staff members. Each member is required to fully understand his/her duties as outlined in the job description.

5.2.3 Laucks offers educational assistance for all staff members who are pursuing studies consistent with their job functions.

5.2.3.1 Records are kept in the personnel file of successful course completion.

5.2.4 Periodically, exams are administered to staff members to maintain and evaluate their skills. Results of these exams are documented in individual personnel files.

5.2.4.1 All new analytical staff are required to take a significant figures quiz and a safety quiz, generally within about one month of their initial employment.

5.2.4.2 Extractions staff, as part of their ongoing training, take both written and practical exams on various extraction methods performed in the laboratory.

5.2.5 Internal laboratory training is often done by the analyst's working directly with a staff member experienced with a particular analysis and/or with the departmental supervisor. This training is informal and in instances where the analyst already has sufficient experience from previous work, may only entail familiarization with the specifics of the operation.

5.2.5.1 The analyst is considered trained at the discretion of the appropriate supervisor(s) and when they are consistently able to produce acceptable results from QC samples or pass certification examinations such as noted in 5.2.4.2 above. In the past, this also has been an informal and largely undocumented process. At the time of

this publication, forms and standard operating procedures (SOPs) are being developed to facilitate more formal evaluation and documentation of staff capabilities. As this process is in its infancy, this program is in a state of rapid change and development which will be further defined in future QC Manual revisions.

5.2.6 It is recognized that all staff, regardless of experience, will occasionally be confronted with test methods or test method changes and differences with which they have no previous experience. Such instances require the supervision of senior staff members/supervisors and/or additional training. Where formal training is available, records are kept in the staff member's personnel file.

5.3 STAFF QUALIFICATIONS - Staffing required for the operation of the laboratory will vary, but the minimum personnel and their qualifications shall be generally as follows:

5.3.1 LABORATORY DIRECTOR - A minimum of a bachelors degree in a physical science with chemistry preferred. A minimum of seven years experience as an analyst. Requires the ability to make and execute policy decisions with regard to laboratory operation.

5.3.2 CHIEF CHEMIST - A minimum of a bachelors degree in a physical science with chemistry preferred. A minimum of five years experience as an analyst. Requires the ability to interpret client needs and to supervise all staff analysts. Requires familiarity with all procedures performed.

5.3.3 QUALITY CONTROL OFFICER - A minimum of a bachelors degree in a physical science (chemistry preferred) and two to three years as an analyst; alternately a comparable level of experience and schooling.

5.3.4 GROUP LEADER - An analyst with at least two years experience in the tests being performed. Requires the ability to supervise and train analysts and technicians.

5.3.5 ANALYST - A minimum of two years of college in the physical sciences is required. Inexperienced analysts will perform tests only under the close supervision of a trained analyst. Two years working laboratory experience or a bachelors degree plus one years experience is required for an analyst to work independently.

5.3.6 TECHNICIAN - A minimum of a high school education is required. Technicians will perform only routine procedures under the close supervision of a trained analyst.

5.3.7 OTHER STAFF/CONSULTANTS - Recognized expertise or experience in a given field as evidenced by peer recognition, publications, experience, or special training.

5.3.8 A list of current staff and their experience is included in Appendix C. Resumes of most personnel are kept on file. Resumes of people who leave the staff are also kept on file.

5.4 ORGANIZATION - An organizational chart is included in Appendix A.

SECTION 6

SAMPLE ENTERING, DATA HANDLING, AND REPORTING

6.1 GENERAL - To obtain meaningful data on environmental samples, the sample collector must obtain a representative sample and then deliver it unchanged for analysis. The analyst must perform the proper analysis for permanent recording of the analytical data in meaningful, exact terms.

6.1.1 Laucks has personnel on staff to do some sampling. As a routine, however, particularly on larger projects requiring complex sampling plans, Laucks does not engage in this aspect of a site review but defers to engineering firms or others with greater expertise in this area. Laucks does provide containers and sampling instructions if desired. These activities are further discussed in section 8 of this manual.

6.2 DATA TRACKING - The following sections discuss entry and storage of samples, processing of data values, recording and reporting of data, quality control of data, and the storage and retrieval of data.

6.3 COMPUTERIZED SAMPLE ENTRY - Each sample or set of samples is assigned a unique identifying work order number, generated by the Laboratory Information Management System (LIMS), on receipt. This unique number consists of 7 digits, such as 9007215. In this example, the work order was initiated in 1990 (90), in the month of July (07) and was the 215th such work order that month (215).

6.3.1 Sub-samples are assigned sub-numbers. For instance, 10 samples assigned to work order number 9007215 would be designated 9007215-01 through -10. A sample is considered to be all containers from a given sampling point. If a water sample is submitted, there may be several different bottles preserved appropriately for the tests to be performed. All bottles from one sampling point would receive the same work order and sub-sample number.

6.3.2 At the time of sample entry, the following functions are performed (refer to SOP LTL-0025 for more detailed information on sample log-in).

6.3.2.1 All of the sample's identifying marks, including date and time of sampling, are recorded in the LIMS for inclusion in the final report.

6.3.2.2 For bottles submitted for analytes for which preservation should occur, a determination is made as to whether suitable preservatives have been added to water samples using pH paper and, if not, preservatives are added. Other pH determinations may be made on a project-specific basis. (Preserved aliquots submitted for volatile organics determinations are NEVER checked for pH at log-in, but immediately prior to analysis). When pH adjustment is required, this fact is so noted on the accompanying chain-of-custody document.

6.3.2.3 Each sample is assigned a sub-number and applicable test codes for that sample are entered into the LIMS.

6.3.2.4 Each sample container is physically marked with its associated sub-number. This identifying mark is made on the container itself, not on its lid.

6.3.2.5 Sample distribution to different locations within the laboratory is determined and samples are taken to appropriate storage areas. Samples transported between buildings at 921 and 940 South Harney are done so under chain-of-custody.

6.3.3 All paperwork associated with the samples (including, but not limited to, chain-of-custody documents, correspondence, airbills or shipping documents, purchase orders, etc.) are compiled, marked with the identifying 7-digit work order number, and forwarded to the Operations Manager for "transmittal" (a procedure which includes checking the log-in information, such as test codes, and "forwarding" the approved test requests to the laboratory electronically).

6.3.3.1 At the transmittal stage, additional "sub-numbers" may be added to the work order. These will represent quality control parameters (for instance, method blank and MS/MSD analyses), not actual field samples.

6.3.3.2 Transmittal yields a hard-copy record of the log-in information, which is then attached to all other associated paperwork and filed alphabetically, to be retrieved when the work order is complete.

6.3.4 Following transmittal, which is to occur within 24 hours of sample receipt, the Data Entry Clerk is responsible for collecting and distributing print-outs of test code backlogs (i.e., analytical requests to the laboratory), as well as quality control test codes, and any other case-specific comments entered into the LIMS and directed to the laboratory. These are all assembled into individual packets based on work groups (for instance, the inorganics department includes four work groups: spectroscopy [IS], wet chemistry [IW], instrumental analysis [II], and special chemistries [SC]) and provided to the leaders of each work group.

6.4 SAMPLE STORAGE - Following sample log-in, samples are distributed to suitable storage areas. The samples are stored in such a manner as to protect them from deterioration, loss or tampering. This may include refrigeration and/or secure (locked) storage if required, at least until the appropriate analyses have been completed. See Appendix B for the preservation and storage of water samples.

6.4.1 Storage areas are defined by test and samples for a given test are stored together. All refrigerators are identified by a letter and/or number. The sample location is noted in the LIMS, or on a companion database ("Bottles"), or on the organic extractions chain-of-custody (for transfer between the buildings at 921 and 940 South Harney).

6.5 TASK ASSIGNMENTS - Most task assignments are made within the LIMS system by analysts requesting work from assigned test codes. This occurs on a variable but routine basis, though in no case is allowed to exceed the holding time. For special cases or when work orders do not conform to the routine and paper work orders are

established, within 24 hours of the transmittal of the entry package to the laboratory, each lab supervisor will determine the tasks to be performed to accomplish the required tests and will make work assignments and schedule due-dates. At the time of task assignment a "T" card is filled out and placed in a rack which has a section for each analyst and/or type of task. These written assignments are used by each analyst to determine an individual work schedule. Work priorities are determined in accordance with project requirements.

6.5.1 For major work, a project leader may be designated by either the group leader or the chief chemist. A project leader will perform all scheduling functions, monitor job progress, and make periodic reports to the office.

6.5.2 At no time is the entry package to be taken to the lab bench. All completed data are returned to the entry package and turned in for checking. All final results are entered on the entry form and/or logged into a lab database.

6.6 DATA HANDLING - In the process of taking a measurement and relating that to the level of analyte in the sample, certain guidelines must be followed to avoid distortion of the analytical value through the calculation process.

6.6.1 SIGNIFICANT FIGURES - The term "significant figures" is used, sometimes rather loosely, to describe a judgment on the reportable digits in a result. When the judgment is not soundly based, meaningful digits are lost or meaningless digits are reported. On the other hand, proper use of significant figures gives an indication of the reliability of the analytical method used. The following discussion describes the process of retention of significant figures.

6.6.1.1 A number is an expression of quantity. A figure or digit is any of the characters 0, 1, 2, 3, 4, 5, 6, 7, 8, 9, which, alone or in combination, serve to express a number. A significant figure is a digit that denotes the amount or the quantity in the particular decimal place in which it stands. Reported analytical values should contain only significant figures. A value is made up of significant figures when it contains all digits known to be true and one last digit in doubt. For example, if a value is reported as 18.8 mg/L, the 18 must be firm while the 0.8 is somewhat uncertain, but presumably better than the values 0.7 or 0.9 would be.

6.6.1.2 The number zero may or may not be a significant figure depending on the situation. Final zeros after a decimal point are always meant to be significant figures. For example, to the nearest milligram, 9.8 grams is reported as 9.800 grams. Zeros before a decimal point with nonzero digits preceding them are significant, such as in the number 100. where both zeros are considered significant. With no preceding nonzero digit, a zero before the decimal point is not significant, such as in the number 0.13. If there are no nonzero digits preceding a decimal point, the zeros after the decimal point but preceding other nonzero digits are not significant, such as in the number 0.0015. These zeros only indicate the position of the decimal point.

6.6.1.3 Final zeros in a whole number may or may not be significant. In a conductivity measurement of 1,000 umhos/cm, there is no implication by convention that the conductivity is 1,000 $\pm$ 1 umhos/cm. Rather, the zeros only indicate the magnitude of

the number. On the other hand, a value of 1,000. would indicate 1,000 ± 1.

6.6.1.4 A good measure of the significance of one or more zeros interspersed in a number is to determine whether the zeros can be dropped by expressing the number in exponential form. If they can, the zeros may not be significant. For example, no zeros can be dropped when expressing a weight of 100.08 grams in exponential form; therefore the zeros are significant. However, a weight of 0.0008 grams can be expressed in exponential form as 8×10^{-4} grams, so the zeros are not significant. Significant figures reflect the limits in accuracy of the particular method of analysis. It must be decided whether the number of significant digits obtained for resulting values is sufficient for interpretation purposes. If not, there is little that can be done within the limits of the given laboratory operations to improve these values. If more significant figures are needed, a further improvement in method or selection of another method will be required.

6.6.1.5 Once the number of significant figures obtainable from a type of analysis is established, data resulting from such analyses are reduced according to set rules for rounding off.

6.6.2 ROUNDING OFF NUMBERS - Rounding off of numbers is a necessary operation in all analytical areas. It is automatically applied by the limits of measurement of every instrument and all glassware. However, when it is applied in chemical calculations incorrectly or prematurely, it can adversely affect the final results. Rounding off should be applied only as described in the following sections.

6.6.2.1 If the figure following those to be retained is less than 5, the figure is dropped, and the retained figures are kept unchanged. As an example, 11.443 is rounded off to 11.44.

6.6.2.2 If the figure following those to be retained is greater than 5, the figure is dropped, and the last retained figure is raised by 1. As an example, 11.446 is rounded off to 11.45.

6.6.2.3 By the most common convention, if the figure following those retained is exactly 5, the figure is dropped and the last retained figure is raised or lowered to the even digit. As an example, 28.35 is rounded up to 28.4, whereas 28.45 is rounded down to 28.4.

6.6.2.4 Laucks recognizes that most computer software is not sophisticated enough to recognize odd or even digits in these instances or in many cases even whether the digit to be dropped is greater than or less than 5. They may also recognize conventions other than those stated above. They will often just drop the trailing digits, effectively always rounding down. Although this is not the preferred convention, Laucks does not consider the overall effect on data quality to be serious enough to warrant complex actions. Where calculations are performed by hand or where simple software modifications can be made, however, the conventions stated above will apply.

6.6.3 ROUNDING OFF ARITHMETIC OPERATIONS - When a series of numbers is added, the sum should be rounded off to the same number of decimal places as the addend with the smallest number of places intact, and rounding off is done afterward. As an example:

$$\begin{array}{r} 11.1 \\ 11.12 \\ +11.13 \\ \hline 33.35 \end{array}$$

The sum must be rounded off to 33.4.

6.6.3.1 When one number is subtracted from another, rounding off should be completed after the subtraction operation, to avoid possible invalidation of the operation.

6.6.3.2 When two numbers are to be multiplied, all digits are carried through the operation, then the product is rounded off to the number of significant digits of the multiplier with the fewer significant digits. For instance, in the operation 11.12 x 5.20 = 57.824, the product is rounded to 57.8.

6.6.3.3 When two numbers are to be divided, the division is carried out on the two numbers using all digits. Then the quotient is rounded off to the number of significant digits of the divisor or dividend, which has the fewer. Thus, 20.24 / 4.0 = 5.05 rounds to 5.0.

6.6.3.4 When a number contains n significant digits, its roots can be relied on for n digits, but its power can rarely be relied on for n digits.

6.6.4 ROUNDING OFF THE RESULTS OF A SERIES OF ARITHMETIC OPERATIONS- The preceding rules for rounding off are reasonable for most calculations; however, when dealing with two nearly equal numbers there is a danger of loss of all significance when applied to a series of computations that rely on a relatively small difference in two values. Examples are calculations of variance and standard deviation. We carry several extra figures through the calculations and then round off the final answer to the proper number of significant figures.

6.6.5 USE OF COMPUTER PROGRAMS IN CALCULATIONS - Laucks uses several different computer systems which are used to perform calculations and generate reports. Techniques are also used which eliminate the manual re-entry of values, thereby reducing the possibility of transcription errors.

6.6.5.1 It is very important that the programs which produce analytical values are checked to ensure that they do not produce erroneous results. All programs performing calculation are checked by another competent programmer, using a data set different than the one used to develop the program.

6.6.6 RAW DATA AND CALCULATIONS - Raw data are recorded by the analyst on either pre-printed data forms or on columnar data pads. Minimum recording requirements are as follows:

- the test performed (methods and references)
- sample information, such as aliquot size, weights, dilutions
- the analyst(s) performing the test and sample preparation
- the date samples were prepared and/or analyzed
- sample results and data qualifying flags
- associated method blank(s), spike(s), replicate(s), and reference material values

The final result should be recorded on the data sheet with proper units indicated.

6.6.6.1 A sample calculation should be included on the data sheet, particularly where the calculations are non-routine and/or complex, as well as any constant factors such as gravimetric conversions. All data sheets are filed in numerical order in files located in the calculation area of the lab until they are archived in our storage facilities.

6.6.7 CHECKING OF CALCULATIONS - All calculations are checked before the laboratory report is submitted for QC review. Two methods of checking calculations are used.

6.6.7.1 In the first, all calculations are repeated by the checker. At the same time, data are checked for completeness and consistency of reporting. The checker initials the data sheet to indicate that checking is completed. The report may then be submitted for the QC review.

6.6.7.2 In the second method, a hard copy report of entered data and final calculations will be produced. The checker determines if data have been entered properly into the program and again examines for completeness and consistency.

6.6.8 LAB SHEETS/LAB REPORTS - The lab sheet may be a duplicate copy of the entry or it may be a pre-printed form, depending on the test(s) to be performed. It contains all the information required for the analyst to identify the samples and to determine which tests to perform.

6.6.8.1 The lab report is a hand-written or computer generated report which may be either the duplicate entry sheet, a pre-printed form, a computer-generated hard copy report, or a computer-generated disk file with sample concentration values and other information entered. It, along with the QC report, is submitted for review to the section supervisor or other appropriate designated person(s) prior to the generation of the final report. The lab report becomes a part of the client's file along with a duplicate of the final, typed report.

6.6.9 QC REPORT - The QC report contains a summary of all information pertaining to precision and accuracy of the test(s) performed. This would include the results of all duplicates, spikes, blanks, standard reference material analyses, etc. Calibration and other information is generally not provided except by special arrangement, preferably prior to initiation of the analysis. Also included in the QC report is a summary of any action taken as a result of the QC information.

6.6.10 REPORT REVIEW - Prior to generation of the final report, all QC results are reviewed by the analyst and the section supervisor or other designated person(s). Questions not addressed by routine laboratory practices are brought to the attention of the QC Officer. If no further work need be performed, the lab report is submitted for generation of the final report. If the QC information indicates that further work is necessary, this is performed and the report is resubmitted for review.

6.6.11 FINAL REPORT - After the QC review indicates that the report meets all acceptability criteria, the final report is produced. Most commonly, a tabular format is employed to report analytical values. QC information is reported in appendices to the analytical report.

6.6.11.1 A copy of the final report and all associated lab data, client communications, QC data, computer transmittal information and other paperwork is stored in a file associated with the specific laboratory number.

6.6.12 More detailed discussion of the data handling process is presented in Laucks SOP LTL-0038.

6.7 DATA ARCHIVING - Hard copy laboratory data are stored for a period of ten years, in a secure, off-site storage facility. Shorter term storage (up to about one year) is in a secure building adjacent to the main laboratory. The keys to this building are kept by the office personnel. Electronic files are archived to 9 track tape, 1/4" magnetic tape, or 5 1/4" floppy diskette.

6.8 SAMPLE DISPOSAL AND ARCHIVING - Samples are not the property of the laboratory, nor are they in any sense "generated" by the laboratory. Nevertheless, the laboratory attempts to act responsibly to both its clients and the public in its sample disposal policies. Samples scheduled for disposal fall into two categories:

- Those which are disposed of thirty days after the date of our final report to a client; and
- Those which are held for longer periods of time as a result of a specific client request and are subsequently released for disposal by the client or returned to the client at its discretion. The laboratory has a significant but finite amount of storage space. In order to be able to store samples for a lengthy period of time, Laucks reserves the right to extend extra charges for long-term storage. In either case, the initial steps taken are the same.

6.8.1 Initiating the Sample Disposal Process - All sample storage areas are surveyed as needed and an inventory made of the identifying laboratory numbers of all samples being held.

6.8.1.1 Files associated with the laboratory numbers are searched for the following information.

- Client Name
- Client Project or Purchase Order Number
- Type of Test Performed
- Date of final Report to Client

6.8.1.2 Having determined which client originally submitted the samples and the date of the laboratory's final report to the client, one of the two sample disposal processes is begun, as described below.

6.8.1.3 Samples received at the laboratory under either of the two EPA contracts (inorganics/organics) are disposed of under a separate schedule. See below.

Option A: Automatic Disposal

- The client has not notified the laboratory that storage in excess of 30 days is required.
- The final report was issued at least 30 days prior to disposal date.

WATER SAMPLES Safety Equipment: Lab coat, gloves and safety goggles are worn. Visual Inspection: Sample aliquots are observed for color and odor. This information, in concert with what is already known about the samples through previous analytical work, may require that samples be returned to the client at the laboratory's discretion.

- All bottles containing sample aliquots for disposal are brought to a laboratory sink.
- The sink is stoppered.
- The bottles are opened and the contents emptied into the sink until full.
- The pH of the sink contents is measured with pH paper.
- If the pH is slightly alkaline, the sink is unstoppered and the water is disposed to the sewer system.
- If the pH is not slightly alkaline, it is adjusted as necessary until it is and the water released as above.
- Empty bottles are placed in the dumpster for ultimate landfilling. Very few bottles are cleaned and recycled, although 40 ml. glass vials with teflon septa, generally used for volatile organic analysis, may be.
- If determined that the sample should be returned to the client for disposal or replacement at the original sampling site, the client is notified and the sample transfer takes place under chain-of-custody.

SOIL SAMPLES Safety Equipment: Lab coat, gloves and safety goggles are worn. Visual Inspection: Sample aliquots are observed for odor and the presence of obvious non-soil substances. This information, in concert with what is already known about the samples through previous analytical work, may require that samples be returned to the client at the laboratory's discretion.

- The jar is opened and the teflon liner removed from the lid for cleaning and recycling.
- The lid is replaced and the sample container placed in the dumpster or transported to a transfer station.
- If determined that the sample should be returned to the client for disposal or placement at the original sampling site, the client is notified and the sample transfer takes place under chain-of-custody.

OTHER SAMPLE TYPES Safety Equipment: Lab coat, gloves and safety goggles are worn.

- All other sample types are visually inspected by the laboratory director, who determines whether the samples may be disposed to a transfer station; should be returned to the client; or should be routed to the laboratory's disposal system for internally generated waste products.

Option B: Disposal at Client's Discretion

- The client has notified the laboratory that storage in excess of 30 days is required.
- The sample identifiers and client information have been logged into a computer tracking system, which monthly generates forms for client update of instructions.
- The client has been contacted by mail and asked to advise its wishes in regard to three options: continued storage; disposal; return.
- If continued storage, no further action currentlly required. Additional charges may be extended for long-term sample storage.
- If disposal, all steps outlined for Water, Soil and Other samples under Option A are implemented.
- if return, the samples are shipped or delivered to the client under chain-of-custody.
- Upon disposal or return of samples, the disposition and date of action are logged into the tracking system.

EPA Samples:

Samples submitted by the EPA for analysis under one or two existing contracts are subject to disposal 60 days after submission of the analytical data. These dates are tracked by the EPA Sample Custodian. All SAFETY EQUIPMENT instructions outlined above are followed.

WATER SAMPLES

- Samples are disposed to the sewer system by pouring down a laboratory sink while tap water is running freely before, during and after the disposal.

SOIL SAMPLES

- Soil samples are bagged and placed in the dumpster for ultimate disposal to a transfer station.

SECTION 7

QUALITY ASSESSMENT TECHNIQUES

7.1 GENERAL - Quality assessment techniques are used to monitor the measurement process in order to determine and document the data quality. Statistical tests are applied to the measurement of a parameter to determine the acceptable method variation within which an analysis is considered precise and accurate. Repetitive analysis of an appropriate number of samples often can provide much of the information needed to perform this evaluation.

7.2 CONTROL LIMITS - Laucks employs several quality control measurements as quality indicators for its analyses. They are:

- Surrogate Spikes - at least 2 recommended with every GC, GC/MS, or HPLC analysis
- Matrix Spikes (MS) - analyzed at a MINIMUM frequency of 5% for all inorganic and organic analyses except for gravimetric and a few selected others (ie pH, conductivity, etc.) where spiking is infeasible.
- Matrix Spike Duplicates (MSD) - routinely analyzed with matrix spikes as MS/MSDs, and at the same frequency, except when contract requirements require MS/duplicates or other similar sample analyses. One exception to this is for TCLP extracts where ONLY a single MS is required PER SAMPLE MATRIX.
- Duplicates (or Replicates) - analyzed for organic or inorganic analytes where contract requirements specify MS/duplicates rather than the more routinely required MS/MSDs or where matrix spikes are not feasible (gravimetric analyses, pH, conductivity, etc.) at a MINIMUM frequency of 5%.
- Instrument Blanks - These are intended as a monitoring of the instrument "baseline," in order to assure a consistent instrument response when no analyte is present. Typically, these are analyzed once at the beginning of the analytical run (initial calibration blank), once after every 10 samples and/or at the end of the analytical run (continuing calibration blanks) or once every QC period, depending on the analysis in question. These blanks are not required of all analyses. Specific methodology, contract requirements and internal laboratory methods and practices should be consulted for specifics.
- Instrument Performance Checks - These include initial and continuing calibration verifications, GC/MS tuning checks, ICP interference check samples and other method-specific checks. Individual methodologies, contract requirements, and internal laboratory methods and practices should be consulted for specifics.

- Method Blanks - analyzed at a frequency of 5% or once per PREPARATION batch, whichever is more frequent, for all appropriate organic or inorganic analytes. The only exceptions to this are analyses such as pH or conductivity where there are no method blanks. In some instances, where no sample preparation is required, the instrument and method blanks may be one and the same. This is intended as a monitoring of potential blank contamination brought about during the sample preparation process and should include all reagents and preparatory steps typical of the samples being analyzed. In many instances, laboratory deionized water or analyte-free sand is substituted for the sample.

- Standard Reference Materials (SRMs) or Laboratory Control Samples (LCSs)- analyzed with each analytical run and at a frequency of 5% for all inorganic analyses where reference materials are readily available and where holding times or volumes required for the analysis allow continued use of that material for a reasonable period of time. For organic analytes and a limited number of short holding-time or high-volume tests, reference materials MAY be available on special prior request.

- Blank Spikes - Blank spikes are currently routine for HAZWRAP and NEESA work and for some selected other analyses, at a frequency of 5%. For inorganic analytes, a laboratory control sample (LCS), also sometimes called a standard reference material (SRM, above), qualifies as a blank spike. For GC/MS analyses, the method blank surrogates qualify as blank spikes. For all other GC, HPLC or other organic analytes or those for which an SRM is not available, an additional sample is analyzed containing the spiking compounds associated with that analysis. For pesticides and herbicides, this should include the appropriate pesticide or herbicide mix. For PCBs, the blank spike should include at least one PCB. Blank surrogates do not qualify as blank spikes for GC or HPLC analyses.

7.2.1 For every parameter measured on a routine basis, control limits are statistically generated to evaluate the measurement involved. This eliminates the need for the analyst to subjectively determine data quality. Use of statistically-derived control limits helps to eliminate subjective evaluation from the data assessment process and is preferred. In certain cases, such as PCB analysis, an experienced analyst's judgment must be followed.

7.2.2 Control limits for surrogate spikes, MS/MSDs and their associated RPDs, and some blanks appear in the Control Limits Catalog. This catalog will be updated approximately every six months.

7.3 BLANK SPIKE, SURROGATE AND MS/MSD RECOVERY AND RPD CONTROL LIMITS GENERATION - Recovery and RPD control limits are generated programmatically from data in the database. These limits are generated every six months from data accumulated over the previous year or longer. If one year of data consists of less than 20 data points, all historical data for that parameter are considered for control limits generation. This operation proceeds through the following steps.

7.3.1 All the data for a given test/analyte/matrix are selected from the database. Any points which have been flagged by the analysts as anomalies are discarded.

7.3.2 If there are less than eight data points the process stops and the following preliminary estimates are assigned.

- Semivolatile base/neutral organic compounds: 20% - 160%
- Semivolatile organic acid compounds: 10% - 160%
- Volatile Organic compounds: 70% - 130%
- Inorganic compounds: 50% - 150%
- MAXIMUM RPD 30%

7.3.3 The mean, sample standard deviation, upper and lower control limits are calculated. Any points exceeding three standard deviations are discarded and the process is repeated.

7.3.4 At this point the control limits are set. The control limits are the mean +3 standard deviations, as based on the previously described calculations.

7.3.5 In some cases the control limits can generate unreasonable values (such as a negative lower control limit). Recoveries have an administrative restriction placed upon them to prevent this from occurring. This limit is generally the default control limit, as defined above for recoveries/RPDs with no established limits.

7.3.5.1 No recovery less than 20% is acceptable for any organic compound which is not an organic acid (phenol). Organic acids must demonstrate greater than 10% recovery.

7.3.5.2 No recovery greater than 160% is acceptable for any compound.

7.3.5.3 Inorganic parameters must demonstrate a minimum 50% recovery (40% for antimony in solid matrix) and can show no greater than 150% recovery.

7.3.5.4 Where upper control limit bounds are determined to be less than 100%, no corrective action is considered necessary until a recovery of greater than 120% is recorded.

7.4 DUPLICATE CONTROL LIMITS - Duplicate control limits are generally assumed to be the same as the RPD limits generated above from the MS/MSD analyses. In the case of duplicate analyses, however, there is a probability that most analytes will be undetected at the limits of the analysis. In such a case, the difference between the duplicate analyses where at least one of them is below 5X the detection limit is equal to plus or minus the detection limit.

7.5 STANDARD REFERENCE MATERIAL (SRM) CONTROL LIMITS - Control limits for SRMs are generally supplied by the vendor (usually EPA or NIST) of that material and are statistically-derived from many analyses by several different laboratories.

7.5.1 Occasionally, an analyte may exist in a reference material but is not a certified value. In this case, the laboratory may choose to generate its own control limits by using 3 times the standard deviation of at least 20 different analyses of that material.

7.5.2 Also occasionally, routine laboratory analysis yields a reproducible value which is consistently lower than the certified value. This may be due to the fact that the certified value was obtained from a different preparation or analytical method. In such case, the laboratory may choose to generate its own control limits by using 3 times the standard deviation of at least 20 different analyses of that material.

7.6 BLANK CONTROL LIMIT GENERATION - Blank control limits are generally considered to be twice the limit of detection for the analyte of concern. Exceptions to this are acetone, benzene, toluene, methylene chloride, and phthalate esters for organic analyses and iron, zinc and selenium (Se in solids only) for inorganic analyses. Limits for these analytes are at 5X the limit of detection.

7.7 CONTROL CHARTS - Laucks currently employs control charts on a limited basis, primarily for parameters monitored under HAZWRAP and NEESA contracts.

7.7.1 Control charts are currently maintained by the QC Officer and are not used at the bench level.

7.7.2 These control charts are based on the surrogate spikes for all volatile and semivolatile organic compounds with the exception of pesticide, PCB, and ordnance compounds.

7.7.3 Pesticide, PCB, and ordnance compounds, in addition to the surrogate spikes, include at least one of the matrix spiking compounds; in other words, at least one pesticide, PCB, or ordnance compound.

7.7.4 Control limits for organic components are based on +3 times the standard deviation of the historical data for that component. Warning limits are based on +2 times the standard deviation. Where fewer than 20 historical data points exist, current EPA CLP control limits are used, if such exist for that compound. If no such limits exist, as for ordnance compounds, Laucks uses default control limits of 20%-160% and warning limits of 43%-137%.

7.7.5 For most inorganic compounds, standard reference materials (SRMs) are monitored. Laucks currently uses control limits based on those supplied by the source (usually EPA or NIST). Warning limits (+2 standard deviations) are calculated by assuming the control limit was calculated at +3 standard deviations from the "true value."

7.7.6 Out-of-control events are defined to be one point outside of the control limit, three consecutive points outside of the same warning limit but within the respective control limit, or 7 consecutive points on the same side of the mean.

7.7.6.1 Actions taken when such events occur may be individualized to the particular analysis. In some cases, it may be that limits need to be re-generated. In other instances, analytical problems may need to be corrected. The QC Officer, Chief Chemist, and/or other appropriate individual(s) should be consulted for appropriate action.

7.8 CORRECTIVE ACTIONS - The need for corrective action in an analysis can be indicated by a QC check value exceeding established control limits. The analyst must investigate the cause and correct the problem. All corrective actions MUST be documented. Sample matrix problems may preclude a resolution of the problem. The laboratory must strive to exceed a minimum standard of 90% completeness in the QC checks. See the corrective actions SOP for further detail. A copy of the corrective actions report form is contained in Appendix E.

7.8.1 Bias is a systematic error inherent in a method which contributes to the difference between the population mean of analytical results and the accepted reference value, sometimes referred to as the "true" or theoretical value. High bias for a particular analyte would result in a reported sample value which could be higher than is actually present. Low bias could result in a reported sample value which could be lower than is actually present. Multiple kinds of bias can occur within the same analysis resulting in a net bias which is high, low, or zero.

7.8.1.1 One form of bias, blanks, are generally considered to be additive, creating high bias. Preparation blanks are routinely analyzed and are further discussed beginning in section

7.8.4. In almost all cases blanks are reported with every job. The primary analyses which are routinely blank-corrected are those for oil & grease. All oil and grease analyses are blank-corrected except for infra-red total oil and grease in water where the water is extracted and analyzed within the instrument itself. For all other analyses, blank data are considered a data qualifier, unless they exceed the control limit. Few analyses at Laucks exhibit significant blank contamination.

7.8.1.2 Recoveries of surrogates, spikes and reference material analytes are considered to be another measure of bias. Ideally, all such analyses would demonstrate 100% recovery. However, for both known and unknown reasons, this rarely occurs. In all cases, with the exception of defined instances such as matrix interference, recoveries are considered to be in control if they are within statistically determined control limits or, in the case of reference materials, within limits defined by the supplier (EPA, NIST, or other source).

7.8.1.3 It is possible to demonstrate recoveries which are in control but are above or below the mean recovery. In most cases, Laucks currently considers this to be acceptable practice, with some bias being allowable. Occasionally, however, circumstances occur which demonstrate a need to either correct significant potential problems or to investigate areas of extraordinary bias. When employing control charts, for instance, 3 points within the control limit (3 standard deviations) but above or below the same warning limit (2 standard deviations) is often considered to be evidence of bias. Seven consecutive points on one side of the mean are also considered evidence

of bias.

7.8.1.4 Consultation with the departmental supervisor, Chief Chemist, and/or Quality Control Officer or knowledgeable experts is often called for in such instances in order to correct problems or consider alternatives.

7.8.2 SPIKE RECOVERIES - Percent recoveries for matrix spikes and/or surrogate spikes are monitored by the analysts and must be within the control limits established by multiple analyses under similar conditions. Outlier values must be documented with an explanation. Some problems may be deemed an unavoidable part of normal operation. Other problems are indicative of the need for re-extraction/re-analysis. All corrective actions are documented using a QC non-conformance memo.

7.8.3 DUPLICATE - Relative Percent Difference criteria are used to evaluate duplicate analyses. The analyst must monitor this value and document the cause of outliers. The spiking levels for MS/MSD should be at least 2 times the native levels and at least 10 times the Method Detection Limit. Poor precision at low concentrations can contribute significantly to the inaccurate determination of RPD.

7.8.3.1 A duplicate OR an MS/MSD set, where a known spiking solution is available, will be performed at least once for every analysis batch or once every 20 samples, whichever is most frequent. This includes all instrumental and wet-chemical methods.

7.8.4 BLANKS - Blank artifacts can originate from the apparatus used, the laboratory environment, the reagents, or even the analyst. The control of blanks is mandated from the need to ensure that false positives are not reported. Method blanks are analyzed once per matrix per batch or per 20 analytical samples, whichever is greater. Method blanks for both GC and GC/MS VOAs are analyzed every 12 hours of instrument operation.

7.8.5 Instrument blanks are those analyzed at the instrument level with as few preparatory steps as possible. They generally consist of solvent or deionized water and are injected directly into the instrument. This blank is primarily intended as a check on instrument performance.

7.8.6 Method blanks consist of an appropriate matrix which has been prepared in a fashion as closely resembling a typical sample as possible. This may be deionized water or sand (to represent the solid matrix) or other analyte-free matrix. The approximate sample size is maintained, as is the volume of reagents used and the conditions to which the sample is exposed. This blank is primarily intended to monitor the performance of the method and to determine if significant contamination is occurring which may create an analytical bias.

7.8.6.1 All titration methods will analyze a blank at the beginning of the analysis batch. One blank should be analyzed for every 20 or fewer samples per matrix.

7.8.6.2 All tests in which absorbances are manually read (colorimetric, atomic absorption, etc.) will have a zero standard blank read just after the initial calibration verification standard (usually an EPA reference material) and after every 10 sample readings. In some cases it may be necessary to prepare additional blank solution.

7.8.6.3 Control limits exist for all analytes and are as follows:

❍ Five times the MDL	Zinc Iron Methylene chloride Acetone
❍ Any determination using blank correction	The value of the blank must be monitored as described and the blank value determined and recorded. The control limit will be an absolute amount which cannot be exceeded.
❍ Special Requirements	Phthalate esters. Re-preparation is required only for those samples that contain a phthalate concentration less than 5X the method blank.
❍ Two times the MDL	All other tests.

7.8.7 INSTRUMENT PERFORMANCE CHECKS - An instrument performance check is the repetitive analysis of a given standard to ensure consistent instrument operation from day-to-day. Some methods utilize specific procedures to evaluate this check. If the value exceeds control limits, the analysis must be stopped and corrective action implemented.

7.8.7.1 When the instrument performance check is started, preliminary limits are calculated and used for control purposes.

This page intentially left blank.

SECTION 8

CONTROL OF TEST PROCEDURES

8.1 CONTROL OF TEST PROCEDURES - The two elements of QC, the determinant portion and the measurement process, combine to form the total analytical process. This manual and any specific test procedures should be consulted to properly perform and document the total analytical process. Any special requirements of a given analytical scheme will document the minimum requirements of QC performance. More stringent requirements may be necessary under some circumstances.

8.2 SAMPLE CONTAINERS - Sample containers supplied by the laboratory bear color-coded labels to indicate preservative present. By extension, the type of preservative indicates the test(s) which may be performed on the contents of any given container. The color coding is as follows:

COLOR	PRESERVATIVE
Blue	None
Yellow	Sulfuric Acid
Orange	Phosphoric Acid/Copper Sulfate
Red	Nitric Acid
White	Sodium Thiosulfate
Green	Variable

8.2.1 Cleaning methods appropriate to the test(s) performed and expected levels are used to prepare bottles for sample collection. See individual methods for any specific requirements.

8.2.2 Sample bottles for specific programs (such as NEESA and HAZWRAP) are periodically checked for contamination on a lot-by-lot basis. Essentially, preserved bottles are filled with deionized water for at least 24 hours (but within the proper holding time) and the contents analyzed for the appropriate target analytes. Records are maintained by the QC Officer of analysis lots. Appropriate project sample containers are denoted in the individual job file so they can be traced back to a QC lot. This process is further detailed in the SOP LTL-0034.

8.2.2.1 Large projects will also often submit field and transport blanks as samples for analysis. Although data from these analyses is not currently tracked by the laboratory as specific to a bottle lot, the lack of analyte detection from these blanks may be used by the client as additional proof of bottle cleanliness. Positive blank results from these would be inconclusive as to the source of contamination without the additional use of bottle-lot-specific QC analysis.

8.3 STANDARD CURVES - For spectrophotometric determinations at least a 6-point (5 standards and a reagent blank) standard curve will be made for each analytical run. Some instruments, (such as the Auto-analyzer), can use a continuing calibration check to verify a 5 point calibration curve. At least a 3-point calibration curve will be used for AA metals analysis.

8.3.1 After determination of the linear response range of a GC detector, a single point calibration is acceptable as long as calibration stability can be demonstrated. The system response for this single calibration must fall within predetermined limits for the calibration to be valid. 8.3.2 Multi-point calibration curves are analyzed using a number of different techniques depending on the specific method requirements. Many of these are discussed in greater detail in other sections of this manual and/or within the specific methods. Methods not discussed in this manual may be used only if detailed in the specific method and considered scientifically sound and generally acceptable by senior supervisory staff.

8.3.2.1 Linear regression techniques are commonly used to determine the best-fit straight line. This best-fit line will be used to determine the analytical values. If the curve is determined to be non-linear, (fails rtest, generally for the 95% confidence interval) a graphical calibration curve may be used for the determination of analyte concentration. Note: rtest is defined in the glossary as well as in Appendix F. A table of acceptable rtest values also appears in Appendix F. Another commonly accepted practice is to consider the curve to be sufficiently linear if the correlation coefficient for a curve of at least 3 points is 0.995 or greater.

8.3.2.2 For many chromatographic analyses, the % Relative Standard Deviation (% RSD) of calibration factors, response factors, or relative response factors is used to determine acceptable linearity.

8.3.2.3 For many chromatographic analyses, after the standard curve has been determined to be acceptable by one of the above methods, the average calibration factor or a single point standard within the QC period is used for sample analyte determination.

8.3.2.4 For certain analyses, where the standard curve is never linear, sample results are often calculated from multiple straight-line segments. In such instances, the points on the curve MUST bracket the sample value and be sufficiently close to one another to give adequate estimation of the sample analyte level.

8.4 MINIMUM QC DETERMINATIONS - At least one method blank per matrix must be analyzed with each batch of samples analyzed or per 20 samples, whichever is more frequent. Method blanks at a frequency of 10% may be required for certain trace analytes. The results of method blanks must be recorded in a method blank file.

8.4.1 Spike samples must be analyzed at a frequency of 5% or 1 per analytical run per matrix, whichever is more frequent. It is generally advisable to determine duplicate spikes in preference to sample duplicates due to the fact that some samples do not contain detectable concentrations of the target analyte(s) and will not yield a meaningful duplicate result. Duplicate spike samples should be analyzed at a frequency

of 5% or 1 per analytical run per matrix. NOTE: Spiking increases the amount of sample required for analysis.

8.4.2 For trace organic analysis, surrogate compounds must be spiked into the sample prior to processing. Surrogates are either isotopically labeled compounds or are compounds chemically similar to those being determined. Isotopically labeled compounds are used when GC/MS determinations are to be made and unlabeled compounds when other types of instrumental analyses are to be performed.

8.5 INTERLABORATORY QC - Reference samples are used in the laboratory to measure the accuracy of laboratory determinations against known samples. Reference materials from NIST (National Institute for Standards and Technology, formerly the NBS), EPA (Environmental Protection Agency), NOAA (National Oceanic and Atmospheric Administration), and Can-Met (Canadian Centre for Mineral and Energy Technology) are available in the laboratory. Upon request, the QC Officer can obtain reference materials from other sources. These cover a wide range of solid matrices as well as water and waste samples. Specific requirements are to analyze an EPA or other reference sample with each ICP, flame AA, graphite furnace AA, auto-analyzer or most other inorganic analyses. Reference samples on other matrices will be analyzed at a frequency determined by each method.

8.5.1 Participation in performance evaluation programs is also practiced. Certifications and approvals are maintained by participation in the following programs:

- EPA Water Pollution Performance Evaluation Studies (WP series), primarily for use in Washington Department of Ecology (DOE) certification
- EPA Contract Lab Program Performance Evaluation Study (CLP), Organics
- EPA Drinking Water Program Performance Evaluation Studies (WS series), primarily for use by the Washington State Department of Health (DOH) certification
- Smalley (AOCS) Fish Meal Series
- USDA-FSIS Meat Certification
- USDA-FSIS PCB Certification

8.6 FIELD SAMPLING - Some field sampling is performed by laboratory staff. In such instances, appropriate collection techniques as required by a specific method are used.

8.6.1 When field sampling is performed by other persons, Laucks may provide instruction in the collection of proper samples. All samples should be collected in properly preserved containers provided by the laboratory.

8.6.2 Trip blanks will be provided when necessary. Duplicate field samples are advised at a frequency of 10% and may be submitted to the laboratory blind. The collection of field replicates measures the variability of the collection process, as well as monitoring laboratory performance.

8.7 HOLDING TIMES - Many tests for water have established holding times in which the samples must be prepared and/or analyzed. There is however, only limited information concerning soil holding times.

8.7.1 Holding times start at the time of collection and stop when the analysis and/or preparation of the sample begin unless otherwise stated in a specific protocol. The only exception to this are EPA CLP samples for which holding times begin at the Verified Time of Sample Receipt (VTSR). Actual EPA CLP holding times are generally somewhat shorter than most published criteria in order to accommodate the time difference between sample collection and laboratory receipt. Projects which require CLP forms and methods but are not actual EPA CLP will use the time of collection as the basis for determining holding times and will use routine published holding times, not those of the CLP, as guidelines.

8.7.1.1 Although the laboratory makes every effort to analyze all samples within specified holding times based on the time of collection, regardless of time of receipt, in order for the laboratory to accept responsibility, the samples must be received in a timely fashion based on the following schedule:

METHOD HOLDING TIME	MAXIMUM SHIPPING ALLOWED
Immediate	None - Immediate*
24 hours	None - Immediate*
48 hours	24 hours MAXIMUM
7 days	2 days
14 days	3 days
28 days	5 days
6 months	Within any reasonable timeframe allowing at least 30 calendar days for analysis.

*As soon as practical following sampling; receipt after 4PM on a Monday-Thursday is equivalent to receiving the sample the following regular business day; receipt after 4PM on a Friday is equivalent to receiving the sample on Monday or the following regular business day, although Laucks will always make every attempt to process a short holding time analysis immediately, if at all possible.

8.7.2 There is some variation between similar methods in regard to holding times. It is also recognized that there are occasional differences between contract required holding times and those commonly accepted by the EPA (NOT the CLP program). In such cases, it is policy to select the most conservative time constraint. In all cases the data reviewer must use professional judgment to determine the consequences of the delays between collection and analysis.

SECTION 9

INTERNAL QA PROGRAM REVIEW AND AUDITING

9.1 RESPONSIBILITIES - The QA program includes the periodic review and inspection of procedures within the laboratory. The nature and frequency of these audits is dependent upon the specific item being monitored. These audits are performed by the Quality Control Officer (QCO) or a designated individual.

9.1.1 The results of all QA inspections and resulting corrective actions are to be filed together and are under the control of the QCO. After an inspection, a summary report will be issued to the Lab Director by the QCO for any items which require the Director's attention.

9.2 AUDITING - There are three basic types of audits: System Audits, Performance Audits, and Data Quality Audits.

9.2.1 System Audits - These audits consist of evaluation of the measurement systems to ensure their proper care and use. They are qualitative audits. A schedule will be kept of each audit and when it must be performed. The list of items monitored includes:

- Maintenance Manuals
  - Balances
  - Conductivity Meter
  - pH/Selective Ion Meters
  - Sample Storage (Refrigerator/Freezer)
  - Instruments
    - AAs/ICPs
    - Spectrophotometers
    - Auto-Analyzer
    - Total Organic Carbon (TOC) Analyzer
    - Total Organic Halogens (TOX) Analyzer
    - GCs
    - GC/MSs
    - Ion Chromatograph
    - Lachat Ion Analyzer
    - HPLC
    - Microtox Analyzer
    - Oil and Grease Analyzers
- Lab Reagent Water Supplies
- Standard Tracking System
- Reagent Chemicals

9.2.1.1 In the event a major defect(s) is discovered as a result of one of these inspections, a follow-up inspection will be conducted after sufficient time has passed to correct the deficiency. The follow-up need only review the deficient point(s). The results of the follow-up will be attached to the original report.

9.2.2 Performance Audits - These audits consist of the introduction of blind spike samples into the laboratory sample stream to evaluate the accuracy of an analysis. They are quantitative audits. A schedule will be kept of each audit and when it must be performed. The list of items checked includes:

Organics

- Volatiles
- Semi-volatiles
- Pesticides/PCBs
- PNAs

Inorganics

- Priority Pollutant Metals
- TOC & TOX
- Anions

Other analytes

9.2.2.1 The results of these checks will be reviewed by the QCO and the results discussed with the analyst(s), the Chief Chemist, and the Laboratory Director. Any procedural changes implemented as a result of this evaluation will be documented.

9.2.3 Data Quality Audits - Internal data quality audits are performed upon client request, when specific problems are observed by those checking results (see section 6.6.7), or when analysts or others observe inconsistencies or abnormalities in results. Audits are occasionally performed, generally by client request, when there is no occasion to suspect erroneous results, primarily in order to affirm data validity or to assess deviations from prescribed conditions. At least one full-scale audit is performed each quarter for all departments.

9.2.3.1 These audits may be as simple as observation of a single analysis to full scale review of an entire project. Control parameters, such as calibration, surrogate and MS/MSD recoveries, blanks, reference material recoveries, etc. are routinely observed as are interrelationships between analyses and, on occasion, historical consistency.

SECTION 10

INSTRUMENT CALIBRATION PROCEDURES

10.1 Introduction and Scope

10.1.1 The purpose of the Quality Assurance/Quality Control (QA/QC) procedures outlined here is the definition of procedures for the evaluation and documentation of laboratory analytical work and for the reduction and reporting of the same data. The objective is to provide a uniform basis for the entire analytical process so that the data reported can be of known quality.

10.1.2 The scope of the procedures is for all laboratory operations from sample receipt to sample reporting.

INSTRUMENT CALIBRATION

10.2. General Laboratory Instruments - The following section covers the calibration of general laboratory instruments.

10.2.1 BALANCES - Balances will be of a type appropriate for the accuracy of the weighing performed. Balances available include triple beam, double pan analytical, single pan analytical, and single pan top-loading. The analytical balances will be used on a heavy table and the level checked and adjusted daily as necessary.

10.2.1.1 Analytical balance calibration is checked daily with a secondary standard. It is also checked weekly with class "S" weights spanning the range of the balance. Balances will be serviced annually by a qualified service engineer. The results of these checks are all recorded in the maintenance manual.

10.2.2 pH/SELECTIVE ION METERS - The pH meter will be standardized daily at two pH levels (generally pH 4 and pH 7). This will be recorded in the maintenance manual. Other buffers may be used as appropriate for the pH range of the samples being measured. The buffers used should be within 3 pH units of the samples. Typically, the primary other buffer used by Laucks is pH 10.

10.2.2.1 The pH electrode will be inspected weekly and cleaned as required. See part 31 of ASTM for a complete cleaning procedure. Records of all inspections and cleaning will be maintained. The electrode(s) will be filled with the proper electrolyte solution when the level is inadequate. Such filling should be noted in the maintenance manual.

10.2.2.2 Specific ion electrodes will be inspected and cleaned at the same frequency as the pH electrodes. Similar records must be maintained.

10.2.3 TURBIDIMETER - The meter will be standardized with 1 reference solution per range. The samples will be diluted to be read within the working range. The reference solution cuvettes will be protected from scratches. Calibrating solutions will be checked against standards from an alternate source on a weekly basis in order to determine if

standard deterioration is occurring. Disagreement between calibrating and reference solutions of 10% or more require initiation of corrective action. Due to the short holding time, analysis may not be able to be discontinued. If such occurs, differences of 20% or greater require remedial action of reanalyzing all samples analyzed under the out-of-control condition after the problem has been corrected. Final results should be reported after consultation with the QC Officer, Chief Chemist, or other appropriate supervisor.

10.2.4 CONDUCTIVITY METER - The meter will be standardized each day that it is used with ranges of KCl standard solution appropriate to the levels of the samples analyzed and the results of the standardization recorded in the maintenance manual. The cell will be examined monthly to ensure that:

(a) the platinized coating is intact;

(b) plates are not coated with suspended matter;

(c) plates are not bent; and

(d) lead wires not frayed or shorting.

Records will be maintained of these checks and notation made of any corrections.

Temperature corrections will be made when the temperature of the sample varies from the temperature of the calibration standard. The cell constant should be checked annually by application of the following equation:

$$L = \frac{K1 + K2}{10^6 \ K_x}$$

Where:

L = Cell Constant

K1 = Conductivity, in umhos/cm, of the KCl solution at the temperature of the measurement.

K2 = Conductivity, in umhos/cm, of the KCl solution at the same temperature as the reagent water used to prepare the reference solution.

K_x = Measured conductance, in umhos.

10.3. Major Inorganic Laboratory Instruments

10.3.1 UV/VIS SPECTROPHOTOMETERS - The Perkin Elmer Lambda 4A automatically aligns itself to an internal deuterium wavelength of 656.1 nm during an initialization process each time the power is turned on, at least once per day of use. At least once per calendar quarter, a graphic printout is made of the wavelength calibration and is dated and kept in a binder. When normalized, the energy output at that wavelength is the maximum of the y-axis. This value, along with the date of calibration is recorded in

the maintenance manual and monitored for significant change. All absorption cells must be kept clean, free of scratches, fingerprints, smudges, and evaporated film residues.

10.3.2 TECHNICON I AUTOANALYZER

10.3.2.1 Initial calibration - The instrument requires no initial calibration since it is recalibrated each day of operation.

10.3.2.2 Ongoing calibration - At least five calibration standards (including a zero standard) are analyzed at the beginning of each analytical run. An EPA reference material is analyzed as a calibration check. The reference material must be within the tabulated acceptance limits. The reference material or a mid-range standard is analyzed after every ten samples. A standard at the MDL is analyzed for all analytes. The minimum requirement for the MDL standard is that it be detectable, although it is desirable that it be within the range of 64% to 220% of the true value.

10.3.2.3 Documentation - All strip chart recordings will be kept as a part of the permanent sample analysis record.

10.3.3 LACHAT QUICKCHEM AE ION ANALYZER

10.3.3.1 Initial calibration - The instrument requires no initial calibration since it is recalibrated each day of operation.

10.3.3.2 Ongoing calibration - At least five calibration standards (including a zero standard) are analyzed at the beginning of each analytical run. An EPA reference material is analyzed as a calibration check. The reference material must be within the tabulated acceptance limits. The reference material or a mid-range standard is analyzed after every ten samples. A standard at the MDL is analyzed for all analytes. The minimum requirement for the MDL standard is that it be detectable, although it is desirable that it be within the range of 64% to 220% of the true value.

10.3.3.3 Documentation - All appropriate calibration printouts will be kept as a part of the permanent sample analysis record.

10.3.4 TOX ANALYZER - The manufacturers manual will be consulted for complete operating instructions.

10.3.4.1 Initial calibration - For water samples the Mitsubishi TOX 10 analyzer is used. 2,4,6-Trichlorophenol is employed as the calibration material. This instrument will detect organic compounds containing bromine, chlorine, and iodine. It does not detect fluorine. The instrument requires no initial calibration since it is recalibrated each day of operation.

10.3.4.2 Linear Range Determination - A linear range determination should be performed every six months and a summary retained by the QC Officer. A series of five standards (not including a blank) will be analyzed to determine the linear range. The lowest standard must be five to ten times the Instrument Detection Limit (IDL) and the highest at the expected maximum of the linear range or lower. The highest level standard must come within 10% of the true value for that level to be considered within the linear range. The correlation coefficient for the curve should be .995 or higher. No

values are reported which are greater than a successful linear range standard.

10.3.4.3 Ongoing calibration - The daily calibration of the TOX analyzer consists of a single point calibration standard. This standard is analyzed after every 10 samples and must be within 15% of true value. A standard at the MDL is analyzed. The minimum requirement for the MDL standard is that it be detectable, although it is desirable that it be within the range of 64% to 220% of the true value.

10.3.4.4 Documentation - The printer tapes are retained as a part of the data file.

10.3.5 TOC ANALYZER - The manufacturers manual will be consulted for complete operating instructions.

10.3.5.1 Initial calibration - For water samples the Dohrman TOC analyzer is used. This instrument employs acid potassium phthalate as the calibration material. The operator's manual for this instrument calls out injection volumes and standard concentrations for calibration. These guidelines are to be followed. The instrument requires no initial calibration since it is recalibrated each day of operation.

10.3.5.2 Linear Range Determination - A linear range determination should be performed every six months and a summary retained by the QC Officer. A series of five standards (not including a blank) will be analyzed to determine the linear range. The lowest standard must be five to ten times the Instrument Detection Limit (IDL) and the highest at the expected maximum of the linear range or lower. The highest level standard must come within 10% of the true value for that level to be considered within the linear range. The correlation coefficient for the curve should be .995 or higher. No values are reported which are greater than a successful linear range standard.

10.3.5.2.1 To calibrate for the volatile organic carbon (VOC) fraction and known solution of benzene in tetraglyme is analyzed using the VOC analysis cycle. A factor is derived as follows:

$$\text{VOC factor} = \frac{C_{theoretical}}{C_{measured}}$$

10.3.5.2.2 This factor is used to adjust all measured VOC values to a "true" value.

10.3.5.3 Ongoing calibration - A single standard is analyzed at the beginning of each analytical run. An EPA reference material is analyzed as a calibration check. If the result is outside the control limits provided by the EPA, corrective action must be taken. Non-purgeable organic carbon standards are analyzed after every 10 samples and must be within 15% of the true value. A standard at the MDL is analyzed. The minimum requirement for the MDL standard is that it be detectable, although it is desirable that it be within the range of 64% to 220% of the true value.

10.3.5.4 Documentation - The printer tapes are retained as a part of the data file.

10.3.6 DIONEX 2000I ION CHROMATOGRAPH - Specific operating procedures for the Dionex 2000I are presented in Laucks SOP LTL-0030. The manufacturers manual will be consulted for complete operating instructions.

10.3.6.1 Initial Calibration - Initial calibration of the Ion Chromatograph consists of the analysis of at least 3 standards plus a blank for every 24 hour period of operation. The correlation coefficient should not be less than 0.995. A calibration check solution is analyzed following the standard curve and must meet the established acceptance criteria. A standard at the MDL is analyzed. The minimum requirement for the MDL standard is that it be detectable, although it is desirable that it be within the range of 64% to 220% of the true value.

10.3.6.2 Continuing Calibration - The mid-range standard is analyzed after every 10 samples and at the end of the analytical run. The response factor (RF) for any given analyte must be within 20% of the calibration curve and the concentration must be within 15% of the true value. A continuing calibration blank must also be analyzed at the same frequency and demonstrate no more than twice the detection limits for the analytes of concern.

10.3.6.3 Documentation - All chromatograms, work sheets, and printouts are filed with the individual data package along with a copy of the run log. Originals of blank and standard data are filed with the first job on the run log. Copies of blanks and a QC summary report (if appropriate to that specific work-order) are filed in each data file.

10.3.7 FLAME ATOMIC ABSORPTION - The manufacturer's manual will be consulted for complete operating instructions. Section 2 and 3 of the QC manual cover gases and other services. Hollow cathode and EDL lamps will be dated when received and when first put into service.

10.3.7.1 Initial Calibration - The instrument requires no initial calibration since it is recalibrated each day of operation.

10.3.7.2 Continuing Calibration - A 3 point calibration is analyzed at the beginning of an 8 hour QC period. Immediately following calibration a Lab Control Standard (LCS) is analyzed. The concentration values for the LCS must be either within the tabulated acceptance window or be within 15% of the stated true value, if no acceptance windows have been tabulated. During analysis the mid-range calibration standard is analyzed after every 10th sample. If the measured concentration differs from the expected value by more than 10%, the instrument is recalibrated. The mid-point calibration standard is also analyzed at the end of the analytical run and must meet the same criteria or else the previous 10 samples are to be reanalyzed. A standard at the MDL is analyzed for all analytes. The minimum requirement for the MDL standard is that it be detectable, although it is desirable that it be within the range of 64% to 220% of the true value.

10.3.7.3 Documentation - All work sheets and printouts are required. Report forms summarizing calibration, calibration verification, and analysis of Laboratory Control Samples (LCSs) are to be provided upon request.

10.3.8 ICP ANALYSES - The manufacturer's manual will be consulted for complete operating instructions. Section 2 and 3 of the QC manual cover gases and other services.

10.3.8.1 Linear Range Determination - On a quarterly basis, a series of five standards

(not including a blank) will be analyzed to determine the linear range. The lowest standard must be five to ten times the Instrument Detection Limit (IDL) and the highest at the expected maximum of the linear range or lower. The highest level standard must come within 5% of the true value for that level to be considered within the linear range. The correlation coefficient for the curve should be .995 or higher. No values are reported which are greater than a successful linear range standard. A summary report must be retained by the QC Officer.

10.3.8.2 Initial Calibration - At the beginning of each 8 hour QC period the instrument will be calibrated using a zero standard (Initial Calibration Blank, ICB) and a single standard which spans the expected analyte concentration range. Typically this standard is 1 mg/L per analyte for environmental analyses. An Initial Calibration Verification standard (ICV) is also analyzed at the beginning of the analytical run. The results of the ICV analysis must either fall within the tabulated acceptance windows, or if these are not available, within 10% of the true value. If both of these conditions are met, the instrument is deemed to be in calibration and samples can be analyzed. The absolute value of the ICB must be no greater than the reporting limit (effectively the method detection limit, MDL) for any analyte. Otherwise, corrective action must be taken and the instrument recalibrated.

10.3.8.3 For ICP calibrations the Interference Check Sample must be analyzed to verify that the analytical lines chosen are free from spectral interference and that background correction is being correctly performed. The ICP interference check standard is analyzed at the beginning and at the end of the analytical run. A standard at the MDL is analyzed for all analytes. The minimum requirement for the MDL standard is that it be detectable, although it is desirable that it be within the range of 64% to 220% of the true value.

10.3.8.3.1 Continuing Calibration - A Continuing Calibration Verification standard (CCV) and a zero standard (Continuing Calibration Blank, CCB) are analyzed at a frequency of 10%. The absolute value of the CCB must be no greater than the reporting limit (effectively the method detection limit, MDL) for any analyte. The continuing calibration verification standard (CCV) must be within 10% of the true value or fall within the EPA or other agency established control limits. Otherwise, corrective action must be taken and the instrument recalibrated. Only analytical results which are between acceptable calibration verification standards and blanks are considered reportable. All sample results not bracketed by acceptable CCVs are reanalyzed.

10.3.8.4 Documentation - All computer printouts and raw data sheets are required to be filed in the client data file.

10.3.9 GASEOUS HYDRIDE - The manufacturer's manual will be consulted for complete operating instructions. Section 2 and 3 of the QC manual cover gases and other services.

10.3.9.1 Initial Calibration - Only a daily calibration is performed for this analysis.

10.3.9.2 Daily Calibration - A 4 point calibration (including a blank) is made at the beginning of the analytical run. Each standard is analyzed in duplicate. If the peak

heights differ by more than 20% for replicate standards a third standard at the same concentration is analyzed. All standards are used for the calibration curve and must demonstrate a MINIMUM correlation coefficient of 0.995. Immediately following calibration an EPA ICV solution is analyzed. The concentration values for the ICV must be either within the tabulated acceptance window or be within 15% of the stated true value, if acceptance windows have not been tabulated. A standard at the MDL is analyzed for all analytes. The minimum requirement for the MDL standard is that it be detectable, although it is desirable that it be within the range of 64% to 220% of the true value.

10.3.9.2.1 During analysis the mid-range calibration standard is analyzed after every 10th sample. If the measured concentration differs from the expected value by more than 10%, the instrument is recalibrated as previously described and all samples analyzed since the last correct calibration are reanalyzed. The mid-point calibration standard is also analyzed at the end of the analytical run and must meet the same criteria or else the samples analyzed since the last satisfactory calibration check are to be reanalyzed.

10.3.9.3 Documentation - All work sheets, strip chart recordings and printouts are to be filed in the client data file.

10.3.10 GRAPHITE FURNACE ATOMIC ABSORPTION - The manufacturer's manual will be consulted for complete operating instructions. Section 2 and 3 of the QC manual cover gases and other services.

10.3.10.1 Initial Calibration - Only a daily calibration is performed for this analysis.

10.3.10.2 Daily Calibration - A 4 point calibration (including a blank) is made at the beginning of the analytical run. Each standard is analyzed in duplicate. All standards are used for the calibration curve and the correlation coefficient for that curve must be .995 or greater. Immediately following calibration an EPA ICV solution is analyzed. The concentration values for the ICV must be either within the tabulated acceptance window or be within 15% of the stated true value, if acceptance windows have not been tabulated. A standard at the MDL is analyzed for all analytes. The minimum requirement for the MDL standard is that it be detectable, although it is desirable that it be within the range of 64% to 220% of the true value.

10.3.10.2.1 During analysis the mid-range calibration standard is analyzed after every 10th sample. If the measured concentration differs from the expected value by more than 10%, the instrument is recalibrated as previously described and all samples analyzed since the last satisfactory calibration check are reanalyzed. The mid-point calibration standard is also analyzed at the end of the analytical run and must meet the same criteria or else the samples analyzed since the last satisfactory calibration check are to be reanalyzed.

10.3.10.3 Documentation - All work sheets, strip chart recordings and printouts are to be filed in the client data file.

10.3.11 COLD VAPOR MERCURY - The manufacturer's manual will be consulted for complete operating instructions. Section 2 and 3 of the QC manual cover gases and

other services.

10.3.11.1 Daily Calibration - A 5 point calibration, including a blank, is made at the beginning of the analytical run. All standards are used for the calibration curve which fall within the linear range, those producing a correlation coefficient of at least 0.995. Occasionally a single standard may produce an absorbance not conforming with the others. This may be judged to be due to contamination, as all standards are digested the same way as samples. Immediately following calibration an EPA ICV solution is analyzed. The concentration values for the ICV must be either within the tabulated acceptance window or be within 15% of the stated true value. During analysis a mid-range calibration standard is analyzed after every 10th sample and at the end of the analytical run. If the measured concentration differs from the expected value by more than 10%, either the instrument is recalibrated as previously described and all samples analyzed since the last satisfactory calibration check are reanalyzed or, if all samples are undetected and the sensitivity is judged by the QC Officer to be sufficient to justify reporting undetected values, the data may be reported. No values with quantifiable levels of mercury will be reported from data where the calibration has drifted out-of-control. A standard at the MDL is analyzed. The minimum requirement for the MDL standard is that it be detectable, although it is desirable that it be within the range of 64% to 220% of the true value.

10.3.11.2 Documentation - All work sheets, strip chart recordings and printouts are to be filed in the client data file.

10.4. Major Organic Laboratory Instruments

10.4.1 VOLATILE COMPOUNDS BY GC/MS - The manufacturer's manual will be consulted for complete operating instructions. Section 2 and 3 of the QC manual cover gases and other services.

10.4.1.1 Initial Calibration - Initial calibration of volatile compounds is performed with a minimum of a 3 point (typically a 5 point) curve. Surrogate and internal standards are added to all calibration standards.

10.4.1.1.1 The Relative Response Factor (RRF) for all compounds at each concentration level are calculated using the internal standard method. The mean response factor for each compound is also calculated. The percent relative standard deviation (%RSD) of the RRF for the specific method criteria will be met.

10.4.1.1.2 Any method specific minimum RRFs will be met before samples can be analyzed.

10.4.1.2 Continuing Calibration - Every 12 hours of instrument operation a mixed standard is analyzed which contains all target compounds at a mid-range level. The standard also contains all surrogate compounds and internal standards, including Bromofluorobenzene (BFB).

10.4.1.2.1 Any method specific minimum RRFs for the continuing calibration standard will be met before samples can be analyzed.

10.4.1.2.2 Any method specific percent differences (%D) of the RRFs must also be met

before samples can be analyzed.

10.4.1.2.3 If the Continuing Calibration verifies the Initial Calibration then it is satisfactory to recalibrate using the current standard.

10.4.1.3 Documentation - After the initial calibration has been validated the mean RRF and percent RSD are calculated for all compounds. A report form is completed detailing the results of the initial calibration. The results of the tune(s) performed during initial calibration must also be generated. All Reconstructed Ion Chromatograms (RICs) and data system printouts are filed in the calibration file.

10.4.1.3.1 Each day a report is required for each GC/MS for each 12 hour time period in which samples are analyzed. This report will consist of the standard quantitation report generated by the data system software. It will document that RRF deviation criteria from the initial multipoint calibration curve and any other method specific calibration criteria have been met. All RICs and sample specific data system printouts must be filed in the client data file. Copies of the daily laboratory standard, along with continuing calibration reports are kept in files specific to each instrument.

10.4.2 SEMIVOLATILE COMPOUNDS BY GC/MS - The manufacturer's manual will be consulted for complete operating instructions. Section 2 and 3 of the QC manual cover gases and other services.

10.4.2.1 Initial Calibration - Initial calibration of volatile compounds is performed with a minimum of a 3 point (typically a 5 point) curve. Surrogate and internal standards are added to all calibration standards.

10.4.2.1.1 The Relative Response Factor (RRF) for all compounds at each concentration level are calculated using the internal standard method. The mean response factor for each compound is also calculated. The percent relative standard deviation (%RSD) of the RRF for the specific method criteria will be met.

10.4.2.2 Continuing Calibration - Every 12 hours of instrument operation a mixed standard is analyzed which contains all target compounds at a mid-range level. The standard also contains all surrogate compounds and internal standards, and DFTPP.

10.4.2.2.1 Any method specific minimum RRFs for the continuing calibration standard will be met before samples can be analyzed.

10.4.2.2.2 Any method specific percent differences (%D) of the RRFs must also be met before samples can be analyzed.

10.4.2.2.3 If the Continuing Calibration validates the Initial Calibration then it is satisfactory to recalibrate using the current standard.

10.4.2.3 Documentation - After the initial calibration has been validated the mean RRF and percent RSD are calculated for all compounds. A report form is completed detailing the results of the initial calibration. The results of the tune(s) performed during initial calibration must also be generated. All Reconstructed Ion Chromatograms (RICs) and data system printouts are filed in the calibration file.

10.4.2.3.1 Each day a report is required for each GC/MS for each 12 hour time period

in which samples are analyzed. This report will consist of the standard quantitation report generated by the data system software. It will document that RRF deviation criteria from the initial multipoint calibration curve and any other method specific calibration criteria have been met. All RICs and sample specific data system printouts must be filed in the client data file. Copies of the daily laboratory standard, along with continuing calibration reports are kept in files specific to each instrument.

10.5. Tuning and GC/MS Calibration

10.5.1 Prior to the analysis of any standards or sample extracts the GC/MS system(s) used must demonstrate the ability to meet standard mass spectral abundance criteria. The tuning compound for semi-volatiles is decafluorotriphenylphosphine (DFTPP) and the tuning compound for volatiles is p-bromofluorobenzene (BFB).

10.5.2 Each GC/MS system used for the analysis of semi-volatile or pesticide compounds must meet the tuning criteria for an injection of 50 ng DFTPP; DFTPP must be injected to meet these criteria. These criteria are outlined in Table 1 except when EPA CLP analysis is to be performed under the 3/90 Statement of Work (SOW) in which case the criteria from Table 2 are used. The DFTPP can be injected separately or as part of the 12-hour calibration standard. Background subtracting or spectrum averaging may be used in order to eliminate column bleed or background ions, but software manipulation of the DFTPP spectra solely to meet tuning requirements is unacceptable. Instrument conditions must be consistent with those used during sample analysis.

TABLE 1. DFTPP KEY IONS AND ION ABUNDANCE CRITERIA, 2/88 EPA SOW

Mass	Ion Abundance Criteria
51	30.0 - 60.0 percent of mass 198
68	less than 2.0 percent of mass 69
70	less than 2.0 percent of mass 69
127	40.0 - 60.0 percent of mass 198
197	less than 1.0 percent of mass 198
198	base peak, 100 percent relative abundance
199	5.0 - 9.0 percent of mass 198
275	10.0 - 30.0 percent of mass 198
365	greater than 1.00 percent of mass 198
441	present but less than mass 443
442	greater than 40.0 percent of mass 198
443	17.0 - 23.0 percent of mass 442

TABLE 2. DFTPP KEY IONS AND ION ABUNDANCE CRITERIA, 3/90 EPA SOW

Mass	Ion Abundance Criteria
51	30.0 - 80.0 percent of mass 198
68	less than 2.0 percent of mass 69
69	present
70	less than 2.0 percent of mass 69
127	25.0 - 75.0 percent of mass 198
197	less than 1.0 percent of mass 198
198	base peak, 100 percent relative abundance
199	5.0 - 9.0 percent of mass 198
275	10.0 - 30.0 percent of mass 198
365	greater than .75 percent of mass 198
441	present but less than mass 443
442	40.0 - 110.0 percent of mass 198
443	15.0 - 24.0 percent of mass 442

10.5.3 p-Bromofluorobenzene (BFB)

Each GC/MS system used for the analysis of volatile compounds must meet the tuning criteria for an injection of 50 ng BFB; 50 ng BFB may be added to 5 ml of reagent water and purged onto the GC column to meet these criteria. These criteria are outlined in Table 3 except when EPA CLP analysis is to be performed under the 3/90 Statement of Work (SOW) in which case the criteria from Table 4 are used. The BFB can be injected separately or as part of the 12-hour calibration standard. Background subtracting or spectrum averaging may be used in order to eliminate column bleed or background ions, but software manipulation of the BFB spectra solely to meet tuning requirements is unacceptable. Instrument conditions must be consistent with those used during sample analysis.

TABLE 3. BFB KEY IONS AND ABUNDANCE CRITERIA, 2/88 EPA SOW

Mass	Ion Abundance Criteria
50	15.0 - 40.0 percent of the base peak
75	30.0 - 60.0 percent of the base peak
95	base peak, 100 percent relative abundance
173	less than 1.00 percent of the base peak
174	greater than 50.0 percent of the base peak
175	5.0 - 9.0 percent of mass 174
176	greater than 95.0 percent but less than 101.0 percent of mass 174
177	5.0 - 9.0 percent of mass 176

TABLE 4. BFB KEY IONS AND ABUNDANCE CRITERIA, 3/90 EPA SOW

Mass	Ion Abundance Criteria
50	8.0 - 40.0 percent of mass 95
75	30.0 - 66.0 percent of mass 95
95	base peak, 100 percent relative abundance
96	5.0 - 9.0 of mass 95
173	less than 2.0 percent of mass 174
174	50.0 - 120.0 percent of mass 95
175	4.0 - 9.0 percent of mass 174
176	93.0 - 101.0 of mass 174
177	5.0 - 9.0 percent of mass 176

Note: Any laboratory action taken which may affect tuning for either DFTPP or BFB (e.g., ion source cleaning) requires that the tune be verified irrespective of the 12-hour tuning requirement.

The 12-hour time period for GC/MS tuning and standards calibration (either initial or continuing) begins at the moment of the injection of either the DFTPP or of the BFB. The time period ends after 12 hours have elapsed according to the system clock.

10.5.4 GC Analyses - The manufacturer's manual will be consulted for complete operating instructions. Section 2 and 3 of the QC manual cover gases and other services. Analytical criteria outlined in this section are general. Individual methods vary in both scope and detail and will not be outlined here. For method specific criteria, the individual methods must be consulted.

10.5.4.1 Retention Time Windows - Retention time windows are established when any significant change is made to an instrument or its configuration (such as a new column), every six months, or whenever specified in a method, whichever is shorter. A MINIMUM of three standards are analyzed over the course of a method specific QC period. These should include the beginning and end of the sequence with at least one in the middle and should be analyzed throughout the course of a typical analysis, to include samples so as to simulate real analytical conditions. The mean and standard deviation of the retention times (RT) of ALL standards for all compounds in the analytical run are determined. The retention time windows are defined as the window half-width $\pm$ the MAXIMUM of 3 times the standard deviation OR 0.3% of the relative retention time (RRT) for narrow bore capillary columns or 1.0% of the RRT for megabore columns. These are calculated to the nearest 0.001 minutes. The RT windows for the QC period are set at the above determined width from either the average RT of the DAILY multipoint standards or of a midpoint standard.

10.5.4.2 Initial Calibration - At the beginning of a method specific QC period, a multipoint calibration curve is constructed from the number of standards specified by the method, generally 3 or 5. More standards may be added for any reason, such as to determine the instrument linearity, but no fewer may be analyzed if sample results are to be reported.

Calibration factors are determined for each analyte and standard using the formula:

$$CF = \frac{\text{Response}}{\text{ng on column}}$$

Any of three methods may be used as defined in the specific method to determine the calibration. Either the linear regression coefficient OR the %RSD is used to evaluate the calibration curve.

10.5.4.2.1 A linear regression analysis may be performed on the calibration factors. The correlation coefficient for the curve must be greater than or equal to the r_{test} value for the number of points in the curve for a 99% confidence interval (see r_{test} in glossary and in Appendix F). The number of points and the corresponding r_{test} values for a limited number of points are listed in the table below:

# of points	minimum r value
3	1.000
4	.990
5	.959
6	.917
7	.875
8	.834
9	.798
10	.765

Sample values may be determined by using the equation $y = mx + b$, where m = slope, x = sample response, and b = intercept of the line from the linear regression calculation.

10.5.4.2.2 The percent relative standard deviation (%RSD) for the calibration factors for the various analytes are calculated. Acceptable values are specified in the individual method, usually 20% to 35% RSD. Sample values are calculated from either the mid-point calibration factor or the average of the calibration factors, depending on the method. In any event, the calibration must pass one of the two criteria specified, either an acceptable correlation coefficient (r value) or an acceptable %RSD.

10.5.4.3 Continuing Calibration - During any time period in which samples are analyzed, a mid-range standard is analyzed at a minimum of the method-specific frequency, usually 24 hours, and at the end of the QC period. The value obtained is compared to the true value and a percent difference (%D) calculated. The %D must be less than the method specific limit, usually about 25%. For these purposes, a sample is defined as an analytical sample, a reagent blank, a sample spike, or a sample duplicate.

10.5.4.4 Documentation - A tabular presentation of compound calibration factors (CFs) for all standard levels is required as well as retention times (RTs), and the standard deviation of the RTs for each compound. The results of the analyses of all mid-range standards analyzed during the QC period are reported as well as the %D for the CFs of

all compounds. All chromatograms and data system printouts are also required.

10.6. Detection Limits - Most instrumental and method detection limits are determined using statistical methods described in Laucks SOP LTL-0027, Determination of Detection Limits. General descriptions of the techniques used are discussed below. Some specific methods have their own ways of determining detection limits which are followed as closely as possible.

10.6.1 Determination of Instrument Detection Limit

10.6.1.1 Laucks SOP LTL-0027, Determination of Detection Limits, gives specifics for determining most detection limits. For most analytes, a standard at a concentration of about 3 to 5 times the expected detection limit is analyzed at least 7 times throughout the course of at least one typical analytical run. The standard deviation and t-statistic of the results of these analyses are calculated. If the absolute value of the t-statistic is less than the appropriate value from the Student's t-table for the 99% confidence interval, the IDL is calculated as 3 times the standard deviation. Otherwise a higher or lower estimate must be made and the IDL analysis redetermined. EPA CLP and specific other methods often have their own prescribed ways to determine appropriate limits. These methods are followed as closely as possible.

10.6.2 Determination of Method Detection Limit

10.6.2.1 The Method Detection Limit (MDL) is determined in accordance with 40 CFR Pt. 136, Appendix B. Laucks has an established SOP, using this and standard statistical calculations, which specifically defines in-house practices.

10.6.3 Documentation - A sample report form labelled "Instrument Detection Limits" will be included in the calibration data file when necessary and may be presented as part of the analytical report if requested.

Glossary

Glossary

Accuracy -- Difference between individual analytical measurements and the true value, corresponding to the sum of systematic and random errors. Accuracy is usually assessed by means of reference sample analysis and percent recoveries of spiked samples.

Analyte -- Compound or element of interest.

Analytical Batch or Analytical Run -- The group of samples which are analyzed together. This may or may not be samples in the same preparation batch but should be validated by appropriate quality control; such as, calibration verification samples, instrument calibration and tuning, etc. This QC is in addition to the QC required to validate the preparation.

Analytical Method -- Set of written instructions completely defining the procedure to be adopted by the analyst in order to obtain an analytical result.

Audit -- Systematic check to determine the quality of operation of some function or activity.

Bias -- A systematic error inherent in a method which contributes to the difference between the population mean of analytical results and the accepted reference value, sometimes referred to as the "true" or theoretical value. High bias for a particular analyte would result in a reported sample value which could be higher than is actually present. Low bias could result in a reported sample value which could be lower than is actually present. Multiple kinds of bias can occur within the same analysis resulting in a net bias which is high, low, or zero.

Blank -- See Field Blank, Trip Blank, Method Blank, Equipment Blank, Instrument Blank

Blank Spike -- Standard matrix sample to which analyte of interest has been added that is processed in the same manner and with the same reagents as a sample. The purpose of this is to monitor the execution of the preparation/analysis. A blank spike which is within specified control limits is a strong indicator that the method is in control and that other out-of-control effects may be due to the specific sample matrix. It may also be used, over time, to measure systematic bias of the method independent of any specific sample.

Calibration Check -- Verification of the ratio of instrument response to analyte amount. A calibration check is made in the same matrix as the standards but from sources of analyte stocks different from those of the standards. Chain of Custody -- An accurate written record which can be used to trace the possession and handling of a sample from the moment of collection through analysis.

Coefficient of Variation -- Same as Percent Relative Standard Deviation.

Confidence Limit -- The statistically derived upper and lower bounds of a particular quality control measurement within which a particular analysis can be expected to fall with a specified probability. These bounds describe the range of acceptability for this measurement, in which case they are considered to be a Control Limit. Typically, the range is +3 standard deviations (99% confidence interval). The lower bound is never less than zero.

Control Samples -- Samples introduced into the sample stream to be used as monitors on the performance of the analytical method (Section 7.2).

Correlation coefficient -- A number between -1 and 1 that indicates the degree of linear relationship between two sets of numbers. It is represented by an "r". It is calculated with the formula:

$$r_{xy} = \frac{n\sum XY - \sum X \sum Y}{\{[n\sum X^2 - (\sum X)^2][n\sum Y^2 - (\sum Y)^2]\}^{1/2}}$$

An r value of either -1 and 1 means perfect linear agreement. r = 0 means no relationship at all.

For more information see Linear Regression and r_{test}.

Contract Required Detection Limit (CRDL) -- The detection limit required to successfully meet the requirements of a contract. These limits should be attainable in the analysis of a typical sample barring any unforeseen interferences.

Data Quality -- Totality of features and characteristics of a data set that bears on its ability to satisfy a given purpose.

Equipment Blank -- Standard matrix sample, to which no analyte of interest has been added, that are used to rinse the sampling equipment. They are used to document adequate decontamination of the sampling equipment between uses. These are also often referred to as rinse blanks.

Field Blank -- Standard matrix sample, to which no analyte of interest has been added, that is transferred from one vessel to another or exposed to whatever conditions may be present at the sampling site. They are used to measure incidental or accidental contamination of a sample during the whole process (sampling, transport, sample preparation, and analysis). These should be distinguished from trip blanks or equipment blanks.

Holding Time -- The maximum time allowable between laboratory receipt of a sample and extraction and/or analysis.

Instrument Blank -- Solvent or reagent blanks used to measure interference or contamination or instrument baseline drift. They are prepared by cycling analyte-free reagent through the instrument and monitoring the response. There are no preparation steps involved other than those necessary to introduce the matrix to the instrument.

Instrument Detection Limit (IDL) -- The amount of analyte statistically determined to be detectable in the solution being introduced to the instrument or presented in the final analysis extract or digestate. This limit is independent of any dilutions or concentrations that are made in the course of preparation and are only related to the sensitivity of that instrument to the analyte(s) of interest.

Laboratory Blank -- See Method Blank

Linear Regression -- The function that indicates the linear relationship between two variables (usually denoted X and Y). The average value of Y can be estimated with the formula:

$$Y\hat{} = mX + b$$

Where: $Y\hat{}$ = Y estimate (called Y hat)

m = slope

b = Y intercept

$$m = \frac{n\sum XY - \sum X \sum Y}{n\sum X^2 - (\sum X)^2}$$

$$b = \frac{\sum X^2 \sum Y - \sum X \sum XY}{n\sum X^2 - (\sum X)^2}$$

Also see Correlation coefficient and r_{test}.

Maintenance Manual - A written record of what has occurred on any given day in the life of a piece of equipment. Any day that an instrument is touched there is to be an entry explaining why.

Matrix Spike/Matrix Spike Duplicate -- See Spike Sample.

Mean -- A measure of central tendency or location which is the sum of the observations divided by the number of observations.

$$\bar{X}_i = \frac{\sum X}{n}$$

This is also called the Arithmetic Mean or Average. Method -- An assemblage of measurement techniques and the order in which they are performed.

Method Blank -- Standard matrix sample to which no analyte of interest has been added that is processed in the same manner and with the same reagents as a sample. The purpose of this is to monitor the introduction of contamination artifacts in the preparation/analysis.

Method Detection Limit (MDL) -- The amount of analyte determined to be statistically detectable in a typical sample analyzed in accordance with the standard procedures for analyzing that analyte in that matrix. This includes any dilutions or concentrations typically associated with all samples of that type analyzed by that method but does not include any allowance for additional dilutions necessary to eliminate a specific matrix interference or to bring the analyte concentration into the range of the standard curve.

Outlier -- An extreme observation that is shown to have a low probability of belonging to a data population.

Practical Quantitation Limit (PQL) -- The lowest level of analyte of interest that can routinely be reliably achieved and quantitated within specified limits of precision and accuracy for a given matrix analyzed by a given method. Amounts below this level may be considered detectable but cannot be relied upon for quantitation within the specified limits. Such levels should be considered estimates. The level often considered as the PQL is about 5 to 10 times the sample detection limit.

Precision -- Degree of mutual agreement among individual measurements made under prescribed conditions with a single test procedure without regard to the true value. Precision is assessed by the analysis of replicate samples.

Preparation Batch -- Samples which are extracted or digested together using the exact same method, reagents, reagent lots and manipulations. These batches should contain batch-specific QC samples; that is, reference materials appropriate to the matrix of the samples and any duplicates and/or spikes required either by client request or routine laboratory practice. Samples from the same preparation batch may or may not be analyzed in the same analytical run but the preparation should be validated for the results to be considered acceptable. This QC is in addition to that required to validate the analytical run.

Quality Assurance (QA) -- The total integrated program for assuring and documenting the reliability of monitoring and measurement data and for integrating quality planning, quality assessment, and quality improvement efforts to meet user requirements.

Quality Control (QC) -- The routine application of procedures for obtaining prescribed standards of performance in the monitoring and measurement process. Reagent or Solvent Blank -- A blank consisting only of the solvent(s) or reagent(s) used to analyze the sample with no preparation involved. The blank is used to identify and monitor or correct signals produced by the reagent or impurities contained in it.

r_{test} -- r_{test} is the value used to evaluate the correlation coefficient used in linear regression. It is a measure of the "degree of certainty" of the correlation coefficient, r, and is calculated as follows:

$$r_{test} = \sqrt{\frac{t^2}{t + df}}$$

t = t value for df from a table of Students t Distribution

df = degrees of freedom

For any value of the correlation coefficient, r, in order to ensure it falls within an acceptable confidence limit, r_{test} will give the minimum acceptable coefficient to meet the specified limit.

(ref. Calculator Decision Making Sourcebook, 2nd ed., 1981, Texas Instruments, pp. 3-17 to 3-18)

Recovery -- Difference between a known and observed value (the analytical results before and after spiking) divided by known amount (of spiking compound) and multiplied by 100 to convert to percentage.

$$\text{Recovery} = \frac{100 \times \text{observed}}{\text{known}}$$

or

$$\text{Recovery} = \frac{100 \times (\text{observed} - \text{background})}{\text{Spike or Surrogate added}}$$

Note that the same relationship holds true for both spike and surrogate "recoveries". The percentage of any analyte observed where the "true" amount OR additional amount is known, is often referred to as recovery.

Relative Percent Difference (RPD) -- The absolute value of the difference between two numbers divided by the average of the two numbers:

$$RPD = \frac{|X - Y|}{1/2 (X + Y)}$$

The RPD value is always a positive number.

Relative Percent Standard Deviation -- A measure of dispersion that is the standard deviation divided by the mean and multiplied by 100 to yield a percentage value.

$$\% \text{ RSD} = \frac{100\,\sigma}{\text{mean}}$$

Relative Response Factor -- The measure of an instrument's response as compared to an appropriate internal standard, all other factors remaining constant. RRFs are used to calculate concentrations of analytes which are appropriate to that internal standard.

$$RRF = \frac{A_x \, C_{is}}{A_{is} \, C_x}$$

Where: A_x = Area of analyte C_x = Concentration of analyte

A_{is} = Area of internal standard C_{is} = Concentration of internal standard

Replicate Sample -- A sample prepared by sub-dividing a sample into two or more separate aliquots. Duplicate samples are considered to be two replicates.

Rinse Blank -- See Equipment Blank

Sample Detection Limit (SDL) -- The level of analyte determined to be detectable in any specific sample after accounting for any and all concentrations or dilutions necessary to analyze that particular sample, regardless of whether or not they were inherent in the method itself, and accounting for such factors as total solids.

Significant Figures -- The number of digits used to express a result in scientific notation. All digits are expected to be known definitely, except the last digit, which may be in doubt.

Spike Sample -- A sample to which predetermined quantities of target analytes are added prior to any preparation/analysis steps. Percent recoveries of the added analytes are calculated to assess method accuracy. Duplicate spike samples are analyzed to assess method precision. These samples are also called Matrix Spike/Matrix Spike Duplicate (MS/MSD) samples. It is necessary to determine the sample level both before and after spiking in order to calculate recoveries and, subsequently, RPDs.

Standard Curve -- A mathematical curve which plots concentrations of a known analyte standard against the instrument response to those standards. The curve should bracket the responses of any samples or it should be demonstrated in some appropriate fashion that the curve is linear up to and beyond the response of any samples quantitated using the curve.

Standard Deviation -- A measure of variability of observations.

$$s = \sqrt{[\,[1/(n-1)]\,\Sigma(Xi-X)^2]}$$

$$\sigma = \sqrt{[\,[1/n]\,\Sigma\,(Xi-X)^2]}$$

$$s = \frac{\sigma}{\sqrt{[(n-1)/n]}}$$

As n gets larger, s .

Standard Operating Procedure (SOP) -- A written document which details an operation, analysis or action whose mechanisms are thoroughly prescribed and which is commonly accepted as the method for performing certain routine or repetitive tasks.

Surrogate -- Organic compounds which are similar to analytes of interest in chemical composition, extraction, and chromatography, but which are not normally found in environmental samples or which are not being determined as analytes of interest. These compounds are spiked into all samples, standards, blanks and spiked samples prior to extraction and analysis. Percent recoveries are calculated and used to monitor the analytical method and, under some conditions, prompt corrective action.

t test -- The test to see if a value is significantly different from a population mean:

$$t_x = \frac{|X - u|}{\sigma}$$

u = population mean

The value for tx is an unsigned number. This value is compared to a critical value from a Student's t distribution table for the number of degree of freedom in ?. If the tx value exceeds the critical value, X is considered an outlier.

Traceability -- The ability to completely reconstruct all activities from the time of sampling to data reporting, including all sample handling as well as instrument maintenance, QC results, and calibration curves.

Trip Blank -- Standard matrix sample, to which no analyte of interest has been added, that is transported to the sampling site and back, to monitor contamination from the container and preservative potentially introduced during transport, field handling, and storage. These are generally used only for volatile parameters. The container should remain unopened once it has been prepared by the laboratory. This should be distinguished from the field blank.

Validity -- Degree to which the reported results represent that which they are intended

Appendix A

Organization Chart

Organizational Chart
Laucks Testing Laboratories

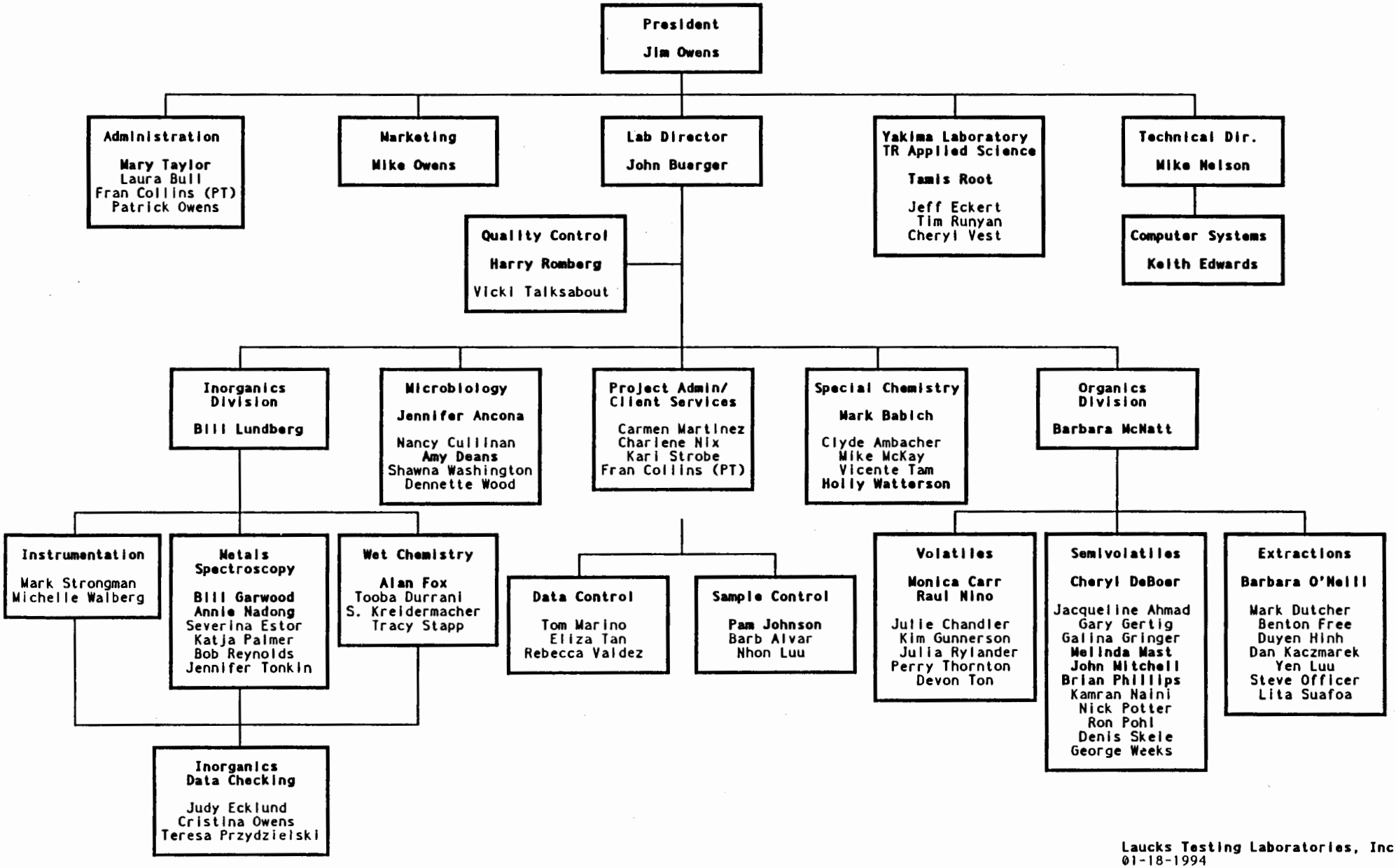

Laucks Testing Laboratories, Inc.
01-18-1994

Appendix B

Sample Preservation And Holding Times

Sample Preservation and Holding Times for Groundwater

Name	Container[1]	Preservation	Maximum Holding Time
Bacterial Tests:			
Coliform, fecal and total	P,G	Cool, 4°C, 0.008% $Na_2S_2O_3$	6 hours
Fecal streptococci	P,G	Cool, 4°C, 0.008% $Na_2S_2O_3$	6 hours
Inorganic Tests:			
Acidity	P,G	Cool, 4°C	14 days
Alkalinity	P,G	Cool, 4°C	14 days
Ammonia	P,G	Cool, 4°C, H_2SO_4 to pH<2	28 days
Biochemical oxygen demand	P,G	Cool, 4°C	48 hours
Bromide	P,G	None required	28 days
Biochemical oxygen demand, carbonaceous	P,G	Cool, 4°C	48 hours
Chemical oxygen demand	P,G	Cool, 4°C, H_2SO_4 to pH<2	28 days
Chloride	P,G	None required	28 days
Chlorine, total residual	P,G	None required	Analyze immediately
Color	P,G	Cool, 4°C	48 hours
Cyanide, total and amenable to chlorination	P,G	Cool, 4°C, NaOH to pH>12, 0.6g ascorbic acid[1]	14 days
Fluoride	P	None required	28 days
Hardness	P,G	HNO_3 to pH<2, H_2SO_4 to pH<2	6 months
Hydrogen ion (pH)	P,G	None required	Analyze immediately
Kjeldahl and organic nitrogen	P,G	Cool, 4°C, H_2SO_4 to pH<2	28 days
Metals:			
Chromium VI	P,G	Cool, 4°C	24 hours
Mercury	P,G	HNO_3 to pH<2	28 days
Metals, except Chromium VI and mercury	P,G	HNO_3 to pH<2	6 months
Nitrate	P,G	Cool, 4°C	48 hours
Nitrate-nitrite	P,G	Cool, 4°C, H_2SO_4 to pH<2	28 days
Nitrite	P,G	Cool, 4°C	48 hours
Oil and grease	G	Cool, 4°C, H_2SO_4 to pH<2	28 days
Organic carbon	P,G	Cool, 4°C, H_2SO_4 to pH<2	28 days
Orthophosphate	P,G	Filter immediately, cool, 4°C	48 hours
Oxygen, Dissolved Probe	G Bottle and top	None required	Analyze immediately
Winkler	do	Fix on site, store in dark	8 hours
Phenols	G only	Cool, 4°C, H_3PO_4 to pH<2	28 days
Phosphorus (elemental)	G	Cool, 4°C	48 hours
Phosphorus, total	P,G	Cool, 4°C, H_2SO_4 to pH<2	28 days
Residue, total	P,G	Cool, 4°C	7 days
Residue, Filterable	P,G	Cool, 4°C	7 days
Residue, Nonfilterable (TSS)	P,G	Cool, 4°C	7 days
Residue, Settleable	P,G	Cool, 4°C	48 hours
Residue, volatile	P,G	Cool, 4°C	7 days
Silica	P	Cool, 4°C	28 days
Specific conductance	P,G	Cool, 4°C	28 days

1-Should be used only in the presence of residual chlorine.

Name	Container[1]	Preservation	Maximum Holding Time
Sulfate	P,G	Cool, 4°C	28 days
Sulfide	P,G	Cool, 4°C, add zinc acetate plus sodium hydroxide to pH>9	7 day
Sulfite	P,G	None required	Analyze immediately
Surfactants	P,G	Cool, 4°C	48 hours
Temperature	P,G	None required	Analyze immediately
Total organic halogens	G, Teflon-lined cap	Cool, 4°C, H_2SO_4 to pH<2	7 days
Turbidity	P,G	Cool, 4°C	48 hours
Organic Tests:			
Purgeable Halocarbons	G, Teflon-lined septum	Cool, 4°C, 0.008% $Na_2S_2O_3$	14 days
Purgeable aromatic hydrocarbons	G, Teflon-lined septum	Cool, 4°C, 0.008% $Na_2S_2O_3$ HCl to pH2	14 days
Acrolein and acrylonitrile	G, Teflon-lined septum	Cool, 4°C, 0.008% $Na_2S_2O_3$ Adjust pH to 4-5	14 days
Phenols	G, Teflon-lined cap	Cool, 4°C,0.008% $Na_2S_2O_3$	7 days until extraction 40 days to analysis
Benzidines	G, Teflon-lined cap	Cool, 4°C, 0.008% $Na_2S_2O_3$	
Phthalate esters	G, Teflon-lined cap	Cool, 4°C	
Nitrosamines	G, Teflon-lined cap	Cool, 4°C, store in dark 0.008% $Na_2S_2O_3$	
Pesticides	G, Teflon-lined cap	Cool, 4°C, pH 5-9	
PCB's, acrylonitrile	G, Teflon-lined cap	Cool, 4°C	
Nitroaromatics and isophorone	G, Teflon-lined cap	Cool, 4°C, store in dark 0.008% $Na_2S_2O_3$	
Polynuclear aromatic hydrocarbons	G, Teflon-lined cap	Cool, 4°C,store in dark 0.008% $Na_2S_2O_3$	
Haloethers	G, Teflon-lined cap	Cool, 4°C, 0.008% $Na_2S_2O_3$	
Chlorinated hydrocarbons	G, Teflon-lined cap	Cool, 4°C	
TCDD	G, Teflon-lined cap	Cool, 4°C, 0.008% $Na_2S_2O_3$	

[1]Polyethylene (P) or Glass (G)

The above holding times are based upon the time of sampling. EPA CLP holding times (not shown here) are based upon the verified time of sample receipt (VTSR) and are somewhat shorter, making an allowance for time in transit.

Appendix C

Personnel And Equipment

January 1994
Laucks Testing Laboratories Inc.
940 South Harney Street
Seattle, Washington 98108
(206) 767-5060

LABORATORY PERSONNEL

Position/Title	Name	Academic Training HS	BA/BS	Other	Present Duties	Experience (years)
President	**Jim Owens**	X	X	X	Lab Management,cost quotations,project direction,problem solving,report review	36
Laboratory director	**John Buerger**	X	X	X	Oversee dept. heads and direct resources to improve quality and efficiency of operations. Lab management.	10
Technical director	**Mike Nelson**	X	X	X	Methods development,computer operations and technical project management	22
Administration	Mary Taylor	X	X	X	Administrative and personnel	22
	Fran Collins	X			Office manager	8
	Laura Bull	X	X		Accounting	10
	Patrick Owens	X	X		Client services and answering phones	6
Marketing director	Mike Owens	X	X	X	Marketing, client services, and lab management	12
Quality Control	**Harry Romberg**	X	X	X	Supervision of laboratory QC program	20
	Vicki Talksabout	X		AA	Blind spike program, monitor NC events	11
Client Services	Carmen Martinez	X	X		Project Management	4
	Charlene Nix		X		Project Management	10
	Kari Strobe	X		X	Assisting in project management	4
Document	Tom Marino	X	X		EPA coordinator	6
Control	Eliza Tan	X			Word Processing	9
	Rebecca Valdez	X			Word Processing and data entry	4
Sample	Pam Johnson	X			Sample custodian	5
Management	Barbara Alvar		X		Sample entering	4
	Nhon Luu	X			Bottle preparation and shipping	4
Computer support	Keith Edwards	X	X	X	Programming and network maintenance	6

January 1994
Laucks Testing Laboratories Inc.
940 South Harney Street
Seattle, Washington 98108
(206) 767-5060

LABORATORY PERSONNEL

Position/Title	Name	Academic Training HS	BA/BS	Other	Present Duties	Experience (years)
Inorganics	**Bill Lundberg**	X	X	X	Inorganic chemistries supervisor	21
	Clyde Ambacher	X	X	X	Classical and non-routine chemistries	35
	Mark Babich	X	X	X	Special chemistries	7
	Tooba Durrani	X	X		TCLP ext.,total sol,grain size analysis	1
	Judy Ecklund	X		X	Inorganics data checking	8
	Severina Estor	X	X	X	Metals digestions,GFAA, mercury, sodium	14
	Alan Fox	X	X	AA	BOD, COD, IR OGs, nitrite, alk, chlor A	6
	Bill Garwood	X	X	X	GFAA, metals digestions, cond,turb,pH	9
	S. Kreidermacher	X	X		BOD, TS, grain size determinations,TCLP extractions.	< 1
	Mike McKay	X		AA	Sampling, OGs, bioassay,hardness,cond.	8
	Annie Nadong	X	X	X	ICP, GFAA	4
	Jeff Owens	X		X	Miscellaneous Support	2
	Cristina Owens	X	X	X	Inorganics data validation	7
	Katja Palmer	X	X	X	Metals digestions, hexachrome	2
	Teresa Przydzielski	X		X	Clerical Support	7
	Bob Reynolds	X	X	X	Flame AA, hydride, hardness	6
	Tracy Stapp	X	X		WTPH-418.1	1
	Mark Strongman	X	X	X	Cyanide,ammonia,nitrate/nitrite, phenol	5
	Vicente Tam	X	X	X	Proximate, nutritional, fertilizers	23
	Jennifer Tonkin	X	X		Metals digestions and AA-hydride analysis	1
	Michelle Walberg	X	X	X	Mercury, TP, OP,NO2, TKN, TOC (soil)	2
	Holly Watterson	X	X		Mercury in fish, Pb by flame AA	4

January 1994
Laucks Testing Laboratories Inc.
940 South Harney Street
Seattle, Washington 98108
(206) 767-5060

LABORATORY PERSONNEL

Position/Title	Name	Academic Training HS	BA/BS	Other	Present Duties	Experience (years)
GC/MS Organics	**Barbara McNatt**	X	X	X	Organics Division Head	21
	Monica Carr	X	X	X	Volatiles group leader	10
	Kim Gunnerson	X	X		MS volatile analysis	8
	Brian Phillips	X	X	X	CLP semivolatiles, instrument maintenance	7
	Nick Potter	X	X	X	MS semivolatiles analyst	8
	Julia Rylander	X	X	X	MS volatiles analysis	12
	Devon Ton	X	X	X	MS volatile analysis	3
Organic Extractions	**Barbara O'Neill**	X	X	X	Supervisor	24
	Mark Dutcher	X	X	X	PCB, WTPH extractions	3
	Benton Free	X	X		Water extractions	2
	Duyen Hinh	X			Suppport	3
	Dan Kaczmarek	X		X	Multimedia organic extractions	8
	Yen Luu	X		X	Multimedia organic extractions	7
	Steve Officer	X	X	X	Multimedia organic extractions	5
	Lita Suafoa	X	X	X	Multimedia organic extractions, extractions group leader	5
GC Non-VOA	**Cheryl DeBoer**	X	X	X	Gas chromatography supervisor,pest/PCB,PNA,NP pest	8
	Jacqui Ahmad	X	X	X	HPLC analysis	4
	Gary Gertig	X	X	X	GC data reduction of volatiles,alcohols	17
	Galina Gringer	X		X	Support including stds and dilutions	9
	Melinda Mast	X	X		WTPH for gas, diesel and screens	4
	John Mitchell	X	X	X	GC/EC gr.lead,GC data reduc of pest/PCB,PNA,ord,herb	5
	Kamran Naini	X	X	X	CLP pest/herb analysis	13
	Dennis Skeie	X	X	X	Supervision of pest/herb/ord analyses	29
	George Weeks	X		X	HPLC analyses including PNA,ord,indole	28

January 1994
Laucks Testing Laboratories Inc.
940 South Harney Street
Seattle, Washington 98108
(206) 767-5060

LABORATORY PERSONNEL

Position/Title	Name	Academic Training HS	BA/BS	Other	Present Duties	Experience (years)
GC VOA	Julie Chandler	X	X		GC volatiles analyst	4
	Raul Nino	X		X	GC volatiles group leader	10
	Perry Thornton	X	X		GC volatiles analysis	5
Yakima Office	**Tamis Root**	X	X	X	Manager of Yakima WA branch	20
	Jeff Eckert	X			Instrumental Analysis	3
	Tim Runyan	X	X	X	Gas chromatography	19
	Cheryl Vest	X	X		Bacteriological testing of foods and waters	< 1
Microbiology	**Jennifer Ancona**	X	X	X	Microbiology supervisor	9
	Nancy Cullinan		X	X	Majonnier and water testing	9
	Amy Deans	X	X	X	Food and water microbiological testing	8
	Shawna Washington	X			Support	< 1
	Denette Wood	X		X	Support	2

January 1994
Laucks Testing Laboratories Inc.
940 South Harney Street
Seattle, Washington 98108
(206) 767-5060

GENERAL LABORATORY EQUIPMENT AND INSTRUMENTS

Item	No. of Units	Manufacturer	Model	Date Purchased
Analytical Balance				
Topload Balance	1	Mettler	H 34	1977, estimated
	1	Mettler	PE 600	1986
	1	Mettler	PL 200	1986
	1	Mettler	PM 200	1986
	1	Mettler	AC 100	1986
	1	Mettler	PB 300	1979, estimated
	1	Mettler	PE 300	1985
	2	Mettler	PM 600	1988 (1), 1988 (1), estimated
	1	Mettler	PE 360	1986
	1	Mettler	AE 200	1988
	1	Ohaus	B 300	1982, used
	1	American Sci. Products	1982, used	
	1	American Sci. Products	DTL 350	1986
Triple Beam	4	Ohaus	Dial-O-Gram	1975 (2), Pre 1974 (2)
	1	Ohaus	Heavy Duty	1980
pH or pH/ion meters				
	1	Orion	SA 720	1982 (used)
	1	VWR	Digital Mini-pH Meter	1987 (estimated)
	1	Markson	74	1987 (estimated)
	1	X-Tech	651	1988 (estimated)
	1	Corning	155	1983
	1	Orion	611	1991 (used)
	1	Jenco	6071	1987
Electrodes	1+ ea	Orion, Corning	pH,Cl- ,F- ,I- ,Br- ,NH3	1988 to present
Conductivity Meter	1	YSI	32	1988

January 1994
Laucks Testing Laboratories Inc.
940 South Harney Street
Seattle, Washington 98108
(206) 767-5060

GENERAL LABORATORY EQUIPMENT AND INSTRUMENTS

Item	No. of Units	Manufacturer	Model	Date Purchased
Heating Block				
	1	Tecator Digester	Instrument ab	1974
	1	Sybron	DB-17613	Unknown
	1	Hach (for COD)	16500-10	1980 (used)
Cyanide Stills	6	Pyrex		1987
Midi-Cyanide Still Setup	1	Lab Crest	MC-100	1993
Dissolved Oxygen Meter	1	VWR Neslab	8500	1990
Kjeldahl Digestors	12	macro		Pre 1974
Stills	18	macro		Pre 1974
Incubators				
	1	Precision Scientific	805	1979
	1	Precision Scientific	6M	1980
	1	Lab-line Hi-Lo Chamber	3554-17	Pre 1974
	1	GCA Precision Sci.	4EC	Pre 1974
	1	VWR	1550	1988
	1	CCA Precision Sci.	low temp Freas 815	Pre 1974
	1	Fisher	55D	1975
	1	NAC	457	1975
	1	NAC	5720	1978
Flash Point Testers				
SetaFlash	2	Erdco Engineer	O1SF	1985 (1), 1986 (1)
Open/Closed Cup	1	Fisher - Tag		Pre 1974
	1	Pensky-Martens		Pre 1974
	1	Cleveland		Pre 1974

January 1994
Laucks Testing Laboratories Inc.
940 South Harney Street
Seattle, Washington 98108
(206) 767-5060

GENERAL LABORATORY EQUIPMENT AND INSTRUMENTS

Item	No. of Units	Manufacturer	Model	Date Purchased
Sonic Bath				
	2	L&R	2014	Unknown
	1	Branson	12	1991
	1	Branson	1200	Unknown
	1	Branson	2200	Unknown
	2	Branson	3200	1988 (1)
	2	Fisher	550	1992
	4	Fisher	XL 2020	1992
Nitrogen Blow-Down	2	Organomation	111	1984 (1), 1989 (1)
	2	Organomation	112	1984 (1), 1991 (1)
	1	Zymark Turbo Vap	ZW 640-3	1991
Automatic Sieve Shaker	1	WS Tyler, Inc.	RX-20 ROTAP	1982
Ovens				
	1	VWR	1300	1985
	1	VWR	1310	1985
	1	VWR	1320	1987
	1	VWR	1330F	1988
	1	VWR	1370F	1988
	1	Precision Scientific	18	Pre 1974
	1	Lab Line Instruments	L-C Oven	Unknown
	1	Blue M	DL100	Unknown
	1	Blue M	OV-18A	Unknown
	1	Blue M	SW-11TA-1	Unknown
	1	National Appliance Co.	5831 (vacuum)	Pre 1974

January 1994
Laucks Testing Laboratories Inc.
940 South Harney Street
Seattle, Washington 98108
(206) 767-5060

GENERAL LABORATORY EQUIPMENT AND INSTRUMENTS

Item	No. of Units	Manufacturer	Model	Date Purchased
	2	VWR	1410 (vacuum)	Unknown
	1	VWR	1300 (dry sterilization)	1975
Refrigerator				
UpRight	1	Lab Line Instruments	Explosion Proof Frigid.	1987
	2	Westinghouse		1975
	1	Frigidaire	Cycla-Matic	1975
	1	General Electric		1986
	2	Precision Scientific		1982 (1), 1975 (1) estimated
	1	J.C. Penny's	3105	1977
	1	Kenmore		1987
7-11 Type	7	True		1986 (2), 1990 (1), 1992 (4)
	2	Master Bilt		1984
"Walk-in" Type	2	approx. 1000 ft3 each		1979 (1), 1985 (1)
Freezers				
	1	Kenmore	23	1990
	1	Kenmore	Up Right	1986
	1	Kenmore	198	1988
	1	Kenmore	6	1987
Vacuum Oven	1	National Appliance Co.	5831	Unknown
	2	VWR	1410	Unknown
Box Furnace	2	Lindberg	51894	1981
Tube Furnace	1	Lindberg	55035	1982

January 1994
Laucks Testing Laboratories Inc.
940 South Harney Street
Seattle, Washington 98108
(206) 767-5060

GENERAL LABORATORY EQUIPMENT AND INSTRUMENTS

Item	No. of Units	Manufacturer	Model	Date Purchased
Shaker	1	**Eberbach**		**Unknown**
	1	Glas-Col		1985
	1	Gyrotory	G2	1985
	1	New Brunswick Sci.	G33	1976
	2	Lab Line Instr.	3520	1991
	1	Garver	360	Unknown
EP tox/TCLP Filters	3	Millipore		1982
Extraction Units	4		6 bottle/unit	1982
TCLP ZHE Extractors	4	Millipore		1984
Extraction Units	1		4 extractors/unit	1984
Steam/Water baths				
	3	Wells	SMP	1984
	1	National Appliance	Controlled Environment	Unknown
	1	Precision Scientific		Pre 1974
	1	Precision Scientific	circulating	1975
	1	VWR	1220 T	1975
	1	VWR	1260 (circulating)	1975
Microwave	1	CEM	MDS-250	1990
Ultra-Violet Box	1	Chromato-Vue		Pre 1974
Specific Ion Meter	1	Orion		1982 (used)
Thermometer	1	Ertco	ASTM Certified	1987

January 1994
Laucks Testing Laboratories Inc.
940 South Harney Street
Seattle, Washington 98108
(206) 767-5060

GENERAL LABORATORY EQUIPMENT AND INSTRUMENTS

Item	No. of Units	Manufacturer	Model	Date Purchased
Centrifuge	1	IEC	HN-SII	Unknown
	2	Clay Adams	Safty-Head	1987 (1)
	1	Arthur H. Thomas	Inter. Clinical Cent.	Unknown
	1	IEC	UV	Unknown
	1	Baxter/Sci. Prod.	2502	Unknown
	1	Cherry Burrell	TD36HC	1975
Oxygen Bomb	1	Parr Instrument		1987
Autoclave	1	Consolidated	SR-24 A	1987
Microscopes				
	1	Nikon	104278	Unknown
	1	Bausch & Lomb	Stereozoom 7	Unknown
	1	Bausch & Lomb	LK 4870	Unknown
Viscosity Apparatus				
Oil Bath	1	Sargent Welch		1984
Viscosity Tubes	16	Cannon Fenske	assorted sizes	Unknown
Viscometers	1	Brookfield	RVF	Unknown
	1	Brookfield	LVT	1980, estimated
	1	Krebs-Stormer		Unknown
	1	Saybolt		1984
Spectrophotometers				
	1	Milton-Roy	Spectronic 20	1991

January 1994
Laucks Testing Laboratories Inc.
940 South Harney Street
Seattle, Washington 98108
(206) 767-5060

GENERAL LABORATORY EQUIPMENT AND INSTRUMENTS

Item	No. of Units	Manufacturer	Model	Date Purchased
	1	Perkin Elmer	Lambda 4A	1988
	1	Beckman	DB	Pre 1974
Fluorometer	2	Turner	111	1982 (1), Unknown (1)
Automated Analysis System				
	3	Technicon	Auto Analyzer I	1982
Automated Ion Analyzer				
	1	Lachat	QuickChem AE	1990
	1	Robotics Sampler	2000-200	1990
Ion Chromatograph	1	Dionex	2000I	1986
Mercury/Hydride System	1	Perkin Elmer	MHS-10	1980
Atomic Absorption Spectrophotometers				
	1	Perkin Elmer (Flame AA)	5000	1979
	1	Perkin Elmer,Zeeman GFAA	Z-5100	1989
	1	Perkin Elmer,Zeeman GFAA	Z-3030	1987
ICP	1	Jarrell Ash	Enviro 36	1990
ICP/MS	1	Perkin Elmer Sciex	ELAN 5000	1993
Mercury Analyzer	2	Coleman	MAS-50	Pre 1974 (1), 1984
IR Spectrophotometer	1	Perkin Elmer	1600 Series FTIR	1992
TOX Analyzer	1	MCI	TOX 10	1985
TOC Analyzer	1	Dohrman	DC80	1978
Detector	1	Horiba	PIR 2000	1978
Oil & Grease Analyzer 1986(2)		2	Horiba	OCMA 220
Turbidimeter	1	Hach	2100A	1983 (used)

January 1994

Laucks Testing Laboratories Inc.
940 South Harney Street
Seattle, Washington 98108
(206) 767-5060

GENERAL LABORATORY EQUIPMENT AND INSTRUMENTS

Item	No. of Units	Manufacturer	Model	Date Purchased
Turbidimeter	1			
MicroTox Toxicity Analyzer	1	Microbics	M-500	1987
Gas Chromotographs				
	10	Hewlett Packard	5890	1984 (1), 1985 (6), 1986 (3)
	3	Hewlett Packard	5890 series II	1987 (1),1990 (2)
	1	Varian Aerograph	1200	1970
G.C. Mass Spectrometers				
(Volatiles)	1	Hewlett Packard	5970 w/ HP 5890 GC	1988
	2	Hewlett Packard	5970 w/HP 5890 II GC	1989 (1), 1990 (1)
	1	Finnigan Mat	1020 w/PE Sigma3B GC	1983
(Semivolatiles)	4	Hewlett Packard	5970 w/ HP 5890 GCs	1984 (1), 1985 (2)
			(1 series II GC)	1989
Liquid Sample Concentrators				
	5	Tekmar	LSC-2	1985 (4), 1987 (1)
	1	OIC	4460A	1990
Automatic Samplers				
	1	Hewlett Packard	7672A	1985
	10	Hewlett Packard	7673A	1988-1991
	2	Tekmar	ALS	1982 (1), 1988 (1)
	1	Tekmar	4200	1989
	7	Hewlett Packard	18653B	1978

January 1994
Laucks Testing Laboratories Inc.
940 South Harney Street
Seattle, Washington 98108
(206) 767-5060

GENERAL LABORATORY EQUIPMENT AND INSTRUMENTS

Item	No. of Units	Manufacturer	Model	Date Purchased
	1	Alpha Omega	7673	1992
	2	Delta Perspectives	PTA-30	1991 (1), 1992 (1)
Sample/Event Controller	4	Hewlett Packard	19405A	1978
Integrators				
	2	Hewlett Packard	3390A	1981 (1), 1984 (1)
	1	Hewlett Packard	3392A	1990
	3	Hewlett Packard	3396	1980 (1), Unknown (2)
	3	Spectra Physics	4270	1986
Gel Permeation Chromatograph				
	1	Anal. Biochem. Labs, Inc.	(ABC) 1002B	1990
UV Detector	1	Gilson	111B	1990
HPLC System I				
UV Detector	1	Waters	440	1987 estimated
Fluorescence Detector	1	Perkin Elmer	650-15	1986
Auto Injector	1	Micrometrics	725	1986
High Pressure Pump	2	Rainin	Rabbit HP	1987 (1) 1989 (1) estimated
HPLC System II				
Variable Wavelength Det	1	Knauer		1990
Solvent Delivery System	1	Rainin	HPXL	1990
Auto Injector	1	Rainin	AI 2	1990
Fluorescence Detector	1	Rainin- Dynamax	FL-1	1992
Pressure Module	1	Rainin		1990
High Pressure Pump	1	Rainin	Rabbit HP	1990
Data Acquisition/Computers				

January 1994
Laucks Testing Laboratories Inc.
940 South Harney Street
Seattle, Washington 98108
(206) 767-5060

GENERAL LABORATORY EQUIPMENT AND INSTRUMENTS

Item	No. of Units	Manufacturer	Model	Date Purchased
Computers				
	2	Hewlett Packard	150	1989
	1	Hewlett Packard	HP1000E Minicomputer	1985
	2	Hewlett Packard	HP1000A Minicomputer	1989
	50	IBM and compatibles	XT, AT, 286, 386,486	1987-1993
A/D Converters	14	Hewlett Packard	18652A	1991 (6), 1992 (8) estimated
	2	Hewlett Packard	35900B dual channel	1991 estimated
Laboratory Computer Network				
Novell	2	Netware 386	v3.10	1990
File Server	1	AST	486 25 MHz	1990
Hard Drives	2	Maxtor	200 MB	1991 (1), 1992 (1)
	2	Maxtor	600 MB	1991
	2	Maxtor	660 MB	1991

Appendix D

SOP And Method Lists

Standard Operating Procedures

LTL-0001	SOP Format
LTL-0002	Operation of JA 2400 ICP (archived)
LTL-0003	Operation of PE 305/HGA 2100 AA (archived)
LTL-0004	Operation of the PE 5000 AA
LTL-0005	Analytical Balances
LTL-0006	EPA Document Handling System
LTL-0007	Sample Bottle Preparation
LTL-0008	QC Corrective Action
LTL-0009	Preparation of Soils and Sediments
LTL-0010	Performance Audits
LTL-0011	Sample Entry and Log-In
LTL-0012	EPA Sample Entry and Log In
LTL-0013	Operation of PE 3030 Zeeman AA
LTL-0014	Operation of PE Plasma II ICP (archived)
LTL-0015	Technicon AutoAnalyzer Operation
LTL-0016	Operation of Coleman MS-50 Mercury Analyzer
LTL-0017	Preparation of Stock and Working Solutions
LTL-0018	Inorganic Glassware Cleaning
LTL-0019	Microtox Analyzer
LTL-0020	Hard Drive Backup Procedures (archived)
LTL-0021	Volatiles Analysis by GC/MS
LTL-0022	Inorganics Data Entry and Report Generation for CLP
LTL-0023	Methods For Oil And Grease Analysis In Water And Solids
LTL-0024	Operation of the PE 5100 Zeeman AA
LTL-0025	Electronic Sample Entry and Log-In
LTL-0027	Determination of Detection Limits
LTL-0028	EPA Inorganics Data Review
LTL-0029	Using SAM Electronic Bench Sheet to Calculate Sample Detection Limits for Organic Analyses (archived)
LTL-0030	Determination of Anions by Ion Chromatography
LTL-0031-1	Extractions lab certification (in progress by MN)
LTL-0031-2	Inorganics Lab Employee Certification of Competency (in progress by MN)
LTL-0031-3	GC Lab Employee Certification of Competency (in progress by MN)
LTL-0031-4	GC/MS Lab Employee Certification of Competency (in progress by MN)
LTL-0032	Waste segregation and Disposal
LTL-0033	Solvent QC Monitoring for Trace Residue Analysis
LTL-0034	Sample Container Cleanliness And Documentation
LTL-0035	HPLC Determination of Picric and Picramic Acids (in progress by MN)
LTL-0036	HPLC Determination of Ordnance Degradation Compounds (in progress by MN)
LTL-0037	Hood Air Flow Determination and Maintenance
LTL-0038-1	Inorganics Data Handling
LTL-0039	HPLC Determination of RDX
LTL-0040	Operation of the Jarrell-Ash Enviro36 Simultaneous ICP (in draft/review, Mike Deckert)
LTL-0041	CLP Organics Standards Preparation
LTL-0042	CLP Organics Data Handling
LTL-0043	Documentation of Standard Preparation (in draft/review, Harry Romberg)

LTL-0044 Preventing Sample Contamination
LTL-0045 Maintaining Instrument Records and Logbooks
LTL-0046 Determination of PNAs by HPLC
LTL-0047 Determination of Pesticides/PCBs by EPA CLP Protocols (renumbered to LX-0039)
LTL-0048 Blind Spike Program
LTL-0049 LAS Quick Reference (in progress, Denis Skeie)
LTL-0050 WTPH-D (in progress...Tim Runyan, renumbered to LX-0031, Cheryl D)
LTL-0052 Analysis of Semivolatile Organics by GC/MS (in progress, Barbara McNatt)
LTL-0053 Refrigerator, Freezer, and Oven Thermometer Calibration and Maintenance (in progress, Vicki Talksabout)

LTL Method List

LX-0001	EPA Cyanide Preparation
LX-0002	Cyanide Sample Screen
LX-0003	EPA Cyanide Analysis
LX-0004	Cyanide Analysis
LX-0005	Phenol Analysis
LX-0006	Nitrogen, Nitrate + Nitrite Analysis
LX-0007	Nitrogen, Ammonia Analysis
LX-0008	Phosphorus Analysis, all forms
LX-0009	**Method for the Instrumental Analysis of Organochlorine Pesticides and PCBs** **8080 revision by John Mitchell....in progress**
LX-0011	**Method for the Instrumental Analysis of Chlorinated Herbicides** **8150 revision by John Mitchell....in progress**
LX-0012	Method for the Analysis of Volatile Organics
LX-0013	GC Analysis of Otto Fuel
LX-0014	**SAM database maintenance (in progress...Mike Nelson)**
LX-0015	**Network maintenance (in progress...Mike Nelson)**
LX-0016	Method for the Instrumental Determination of Ordnance Compounds (archived)*
LX-0017	GC-FID Screen Instrumental Analysis Of BAN Compounds Calculated As Phenanthrene
LX-0018	**Data handling (in progress...Mike Nelson)**
LX-0019	Culture and Care of Daphnia
LX-0020	48 Hour Daphnia LC50
LX-0021	Culture of Selenastrum Capricornutum (Green Algae)
LX-0022	Care and Maintenance of Pimiphales Promelas (Fathead Minnows)
LX-0023	96 Hour Fathead Minnow (Pimiphales Promelas) Bioassay
LX-0026	48 Hour Rainbow Trout (Oncorhynchus Mykiss) LC50
LX-0027	**Toxic Characteristic Leaching Procedure (TCLP) Methods of Extraction (being revised....in progress, Harry Romberg)**
LX-0028	CLP BNA Analysis
LX-0029	**WTPH-HCID (in progress....Melinda Mast/Tim R)**
LX-0030	**WTPH-G (in progress....Raul N/ Sam Bliden)**
LX-0031	**WTPH-D (in progress....Melinda Mast/Cheryl D)**
LX-0032	**GC\Volatiles by Method 8010 (in draft/review, Raul Nino)**
LX-0033	**GC\Volatiles by Method 8020 (in draft/review, Raul Nino)**
LX-0034	**Total Dissolved Solids (in draft/review.....Harry Romberg)**
LX-0035	**Total Suspended Solids (in draft/review.....Harry Romberg)**
LX-0036	**Alkalinity by EPA 310.1 (in draft/review.....Harry Romberg)**
LX-0037	**Alkalinity by SM 2320 B (in draft/review.....Harry Romberg)**
LX-0038	**PCBs in Materials (in progress Perry T./John M)**
LX-0039	**Determination of Pesticides/PCBs by EPA CLP Protocols (renumbered from LTL-0047, in progress John M./Kamran N.)**
LX-0040	**Modified 8015 (in progress, Melinda M./Karl H.)**
LX-0041	**NH3, Automated Phenate (350.1) by Lachat Ion Analyzer (in progress..Mark S)**
LX-0042	**NO3/NO2, Cd Reduction (353.2) by Lachat Ion Analyzer (in progress..Mark S)**

LX-0043	**TOC by 9060 (in progress, Roger Heather)**
LX-0044	**TOC by 415.2 (in progress, Roger Heather)**
LX-0045	**Volatiles by 524.2 (in progress, Monica)**
LX-0046	**Phenols by 8040 (in progress, Perry)**
LX-0047	**EDB & DBCP by EPA 504 (in progress...Perry)**
LX-0048	**Explosives by HPLC, EPA 8330 (in progress...Ron Pohl)**
LX-0049	The Determination of Total Organic Carbon in Soil/Sediment Samples
LX-0050	**Volatiles EPA CLP 3/90 (in progress, Monica)**
LX-0051	**Methods for the extraction of woods pests**

* An un-numbered and complete method for the analysis of ordnance compounds also exists.

Appendix E

Corrective Action Forms

Laucks Testing Laboratories Inc. Corrective Actions Report

Problem Description:

Tasked to: _____ on _____

By: _____ Suspense Date: _____

Problem Cause and Corrective Action:

Completed by:

Date:

☐ Corrective Actions to be reviewed 30 days after completion to verify problem has been eliminated.

☐ No further action necessary.

Reviewed:

Date:

Number

QC Nonconformance Memo

Date _____ Reported By _____

Test _____

Describe the Non-Conforming Event

Describe the Corrective Action Taken

Reviewed _____

_____

_____

_____

Entered _____

By _____

Sample Do Not Copy

Appendix F

r_{test} Method And Table For Determining Standard Curve Linearity

r_{test} is the value used to evaluate the correlation coefficient used in linear regression. It is a measure of the "degree of certainty" of the correlation coefficient, r, and is calculated as follows:

$$(r_{test})^2 = \frac{t^2}{t^2 + df}$$

t = t value for df from a table of Student's t Distribution

df = degrees of freedom

For any value of the correlation coefficient, r, in order to ensure it falls within an acceptable confidence limit, r_{test} will give the minimum acceptable coefficient to meet the specified limit.

The following table is provided to simplify the process. To evaluate the correlation coefficient, compare the correlation coefficient with the table reading for the number of samples used in the standard curve and the desired confidence level. In general, a 95% or greater confidence level is required for considering the standard curve to be acceptable. Any correlation coefficient which is less than the r_{test} value from the table for that number of standards at the 95% level is considered unacceptable. Any correlation coefficient equal to or greater than that value is usable.

Values below are provided for the 90%, 95%, 99%, and 99.9% confidence levels and up to 10 standards. For more than 10 standards or another confidence interval, calculate from the formula above and a table of Student's t scores, or consult the reference below.

Table of r_{test} Values

# of standards	(df) degrees of freedom	90%	95%	99%	99.9%
3	1	.988	.997	1.000	1.000
4	2	.900	.950	.990	.999
5	3	.805	.878	.959	.991
6	4	.729	.811	.917	.974
7	5	.669	.755	.875	.951
8	6	.621	.707	.834	.925
9	7	.582	.666	.798	.898
10	8	.549	.632	.765	.872

(ref. Calculator Decision Making Sourcebook, 2nd ed., 1981, Texas Instruments, pp. 3-17 to 3-18)

INDEX

Acids ..... 3 - 2
Analyst ..... 5 - 2
AOAC ..... 1 - 4, 5
AOCS ..... 1 - 5, 6
ASTM ..... 1 - 4, 5
Audits ..... 9 - 1, 2

Bench Space ..... 2 - 1
blank spike ..... 7 - 2
Blanks ..... 3 - 1
Blind spike ..... 9 - 2

Calibration
- analytical balances ..... 10 - 1
- Conductivity Meter ..... 10 - 2
- Dionex 2000I Ion Chromatograph ..... 10 - 4
- flame atomic absorbtion, PE 5000 AA ..... 10 - 5
- gas chromatography ..... 10 - 12
- GC/MS Semivolatiles ..... 10 - 8
- GC/MS VOA ..... 10 - 8
- graphite furnace absorbtion ..... 10 - 7
- hydride atomic absorbtion ..... 10 - 6
- ICP ..... 10 - 5
- Lachat Quickchem AE ..... 10 - 3
- mercury cold vapor ..... 10 - 7
- PE Lambda 4A ..... 10 - 2
- pH/specific ion electrodes ..... 10 - 1
- Technicon I autoanalyzer ..... 10 - 3
- TOC analyzer ..... 10 - 4
- TOX analyzer ..... 10 - 3
- Turbidimeter ..... 10 - 1

calibration blank ..... 7 - 1
calibration verification ..... 7 - 1
Checking ..... 6 - 6
Chemical grades ..... 3 - 1
Chemicals ..... 3 - 2
Chief Chemist ..... 1 - 5, 5 - 2
Comparability ..... 1 - 4
Compressed air ..... 2 - 3
Compressed Gases ..... 3 - 3
Computerized Sample entry ..... 6 - 1
Computers ..... 6 - 5

Confidentiality ..... 1 - 3
Consultants ..... 5 - 2
Control Charts ..... 7 - 4
Corrective actions ..... 7 - 5
forms ..... App E

Data Quality Audits ..... 9 - 1, 2
Data tracking ..... 6 - 1
Duplicate analyses ..... 7 - 6
Duplicates ..... 7 - 1

Educational assistance ..... 5 - 1
Electrical ..... 2 - 1
EPA ..... 1 - 4

Federal Register ..... 1 - 4
Field sampling ..... 8 - 3
Final Report ..... 6 - 7

Gases ..... 3 - 3
Group leader ..... 5 - 2

HAZWRAP ..... 1 - 6, 7 - 4
Holding Times ..... 8 - 4, App B
Hood Space ..... 2 - 1
Hoods/exhaust systems ..... 2 - 3

instrument blank ..... 7 - 1, 6
instrument performance check ..... 7 - 1, 7
Instrument service ..... 4 - 1
Instruments ..... 4 - 1
Interlaboratory QC ..... 8 - 3

Job descriptions ..... 5 - 1

Lab report ..... 6 - 7
Lab sheet ..... 6 - 6
Laboratory Accreditation ..... 1 - 6
laboratory control sample ..... 7 - 2
Laboratory description ..... 1 - 3
Laboratory Director ..... 1 - 2, 5 - 2
Lighting ..... 2 - 1
Linear regression ..... 8 - 2

Maintenance logs ..... 4 - 1
Maintenance, water system ..... 2 - 2

Matrix problems ..... 7 - 5
matrix spike ..... 7 - 1, 6
matrix spike duplicate ..... 7 - 1
Method blank ..... 3 - 1, 7 - 2, 6
Methodology ..... 1 - 4, App D
Methods, non-standard ..... 1 - 5
Methods, responsibility ..... 1 - 5

NEESA ..... 1 - 6, 7 - 4
NIOSH ..... 1 - 4

Organizational chart ..... 5 - 2, App A

PAM ..... 1 - 4
Performance Audits ..... 9 - 1, 2
Personnel ..... 5 - 1, App C
Physical description ..... 2 - 1
Preservatives, sample ..... 8 - 1, App B
Primary standards ..... 3 - 1

QA program responsibilities ..... 1 - 1
QA Program review ..... 9 - 1
QC report ..... 6 - 7
Quality Assurance Program ..... 1 - 1
Quality Control Officer ..... 1 - 2, 5 - 2

Reagent blank ..... 3 - 1
Reagent water ..... 2 - 2
Reference samples ..... 8 - 3
Replicates ..... 7 - 1
Report Review ..... 6 - 7
Responsibility, QC Manual ..... 1 - 1
Revisions, QC Manual ..... 1 - 1
Rounding ..... 6 - 4

Safety equipment ..... 2 - 3
Sample containers ..... 8 - 1, App B
sample disposal and archiving ..... 6 - 7
sample identification ..... 6 - 1
Sample storage ..... 6 - 2
Security ..... 1 - 3
Significant figures ..... 6 - 3
Solvents ..... 3 - 2
SOPs and Other Documents ..... 1 - 6, App D
Staff qualifications and training ..... 5 - 2
Standard Methods ..... 1 - 4

standard reference material....7 - 2
Standards....3 - 1
State of Alaska Department of Environmental Conservation....1 - 6
surrogates....7 - 1, 5
SW-846....1 - 4
System Audits....9 - 1
Technician....5 - 2
Trip blanks....8 - 3
tuning and GC/MS calibration....10 - 10

U.S. Department of Agriculture (USDA)....1 - 6

Vacuum....2 - 3

Washington State Department of Ecology (DOE)....1 - 6
Washington State Department of Health (DOH)....1 - 6
Water....2 - 2
Water quality....2 - 2

Port of Tacoma
June 3, 1994

ATTACHMENT A-6
BORING LOGS
AND MONITORING WELL INSTALLATION DIAGRAMS

Key to Exploration Logs

Sample Descriptions

Classification of soils in this report is based on visual field and laboratory observations which include density/consistency, moisture condition, grain size, and plasticity estimates and should not be construed to imply field nor laboratory testing unless presented herein. Visual-manual classification methods of ASTM D 2488 were used as an identification guide.

Soil descriptions consist of the following:
Density/consistency, moisture, color, minor constituents, MAJOR CONSTITUENT, additional remarks.

Density/Consistency

Soil density/consistency in borings is related primarily to the Standard Penetration Resistance. Soil density/consistency in test pits is estimated based on visual observation and is presented parenthetically on the test pit logs.

SAND or GRAVEL Density	N, Standard Penetration Resistance in Blows/Foot	SILT or CLAY Consistency	N, Standard Penetration Resistance in Blows/Foot	Approximate Shear Strength in TSF
Very loose	0 - 4	Very soft	0 - 2	<0.125
Loose	4 - 10	Soft	2 - 4	0.125 - 0.25
Medium dense	10 - 30	Medium stiff	4 - 8	0.25 - 0.5
Dense	30 - 50	Stiff	8 - 15	0.5 - 1.0
Very dense	>50	Very stiff	15 - 30	1.0 - 2.0
		Hard	>30.	>2.0

Moisture

Dry	Little perceptible moisture
Damp	Some perceptible moisture, probably below optimum
Moist	Probably near optimum moisture content
Wet	Much perceptible moisture, probably above optimum

Minor Constituents

	Estimated Percentage
Not identified in description	0 - 5
Slightly (clayey, silty, etc.)	5 - 12
Clayey, silty, sandy, gravelly	12 - 30
Very (clayey, silty, etc.)	30 - 50

Legends

Sampling

BORING SAMPLES

- Solit Spoon
- Shelby Tube
- Cuttings
- Core Run
- * No Sample Recovery
- P Tube Pushed, Not Driven

Well Installation

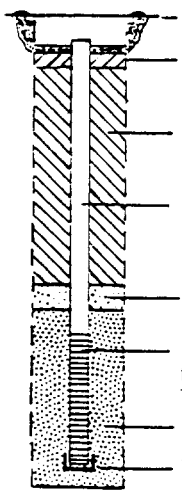

Test Symbols

GS	Grain Size Classification
CN	Consolidation
TUU	Triaxial Unconsolidated Undrained
TCU	Triaxial Consolidated Undrained
TCD	Triaxial Consolidated Drained
QU	Unconfined Compression
DS	Direct Shear
K	Permeability
PP	Pocket Penetrometer Approximate Compressive Strength in TSF
TV	Torvane Approximate Shear Strength in TSF
CBR	California Bearing Ratio
MD	Moisture Density Relationship
AL	Atterberg Limits

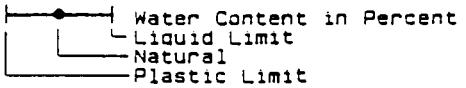

HARTCROWSER
J-3203-08 12/92
Figure A-6-1

Boring Log and Construction Data for Well MW-1

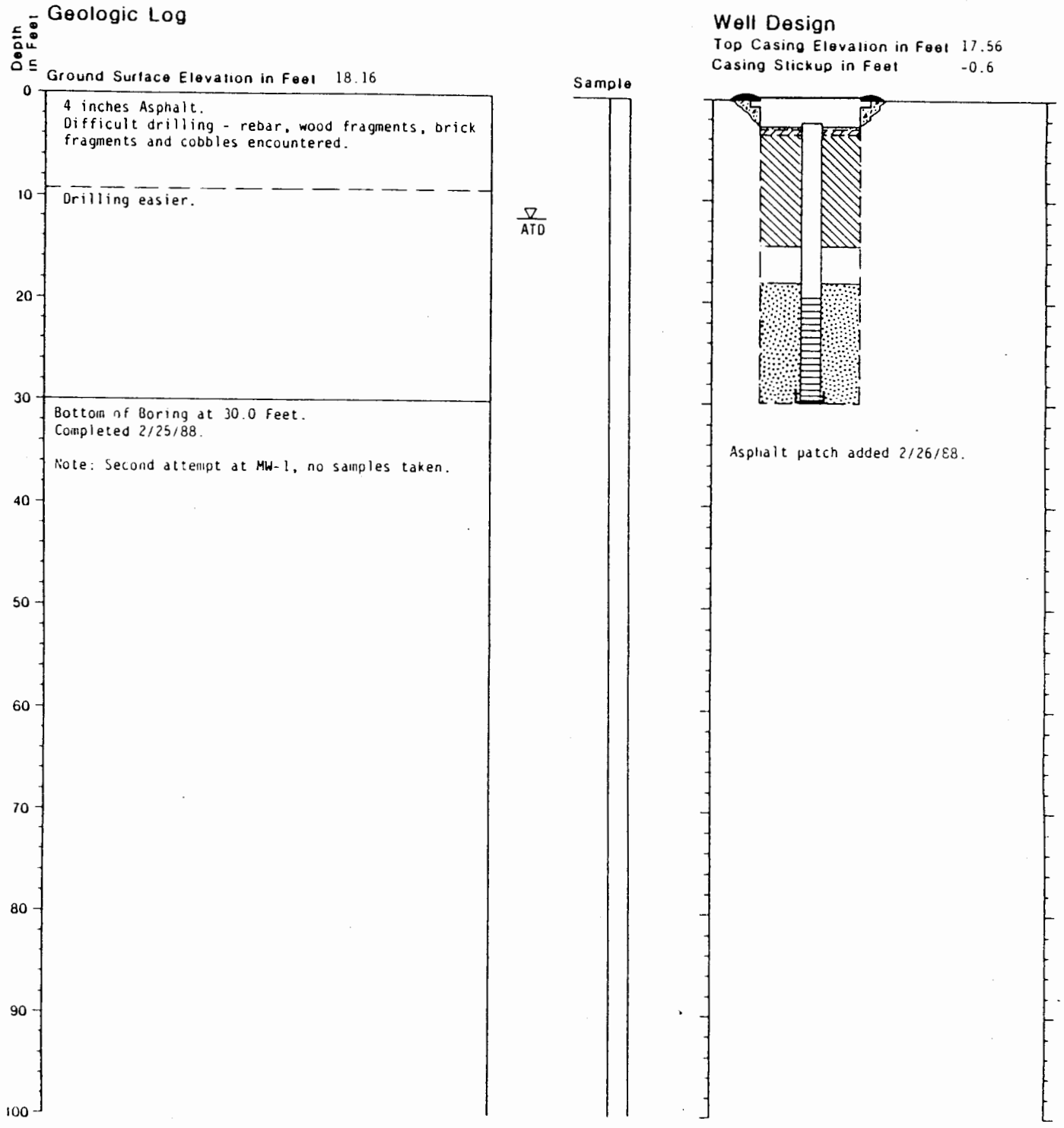

HARTCROWSER
J-3203-08 12/92
Figure A-6-2

Boring Log and Construction Data for Well MW-1A

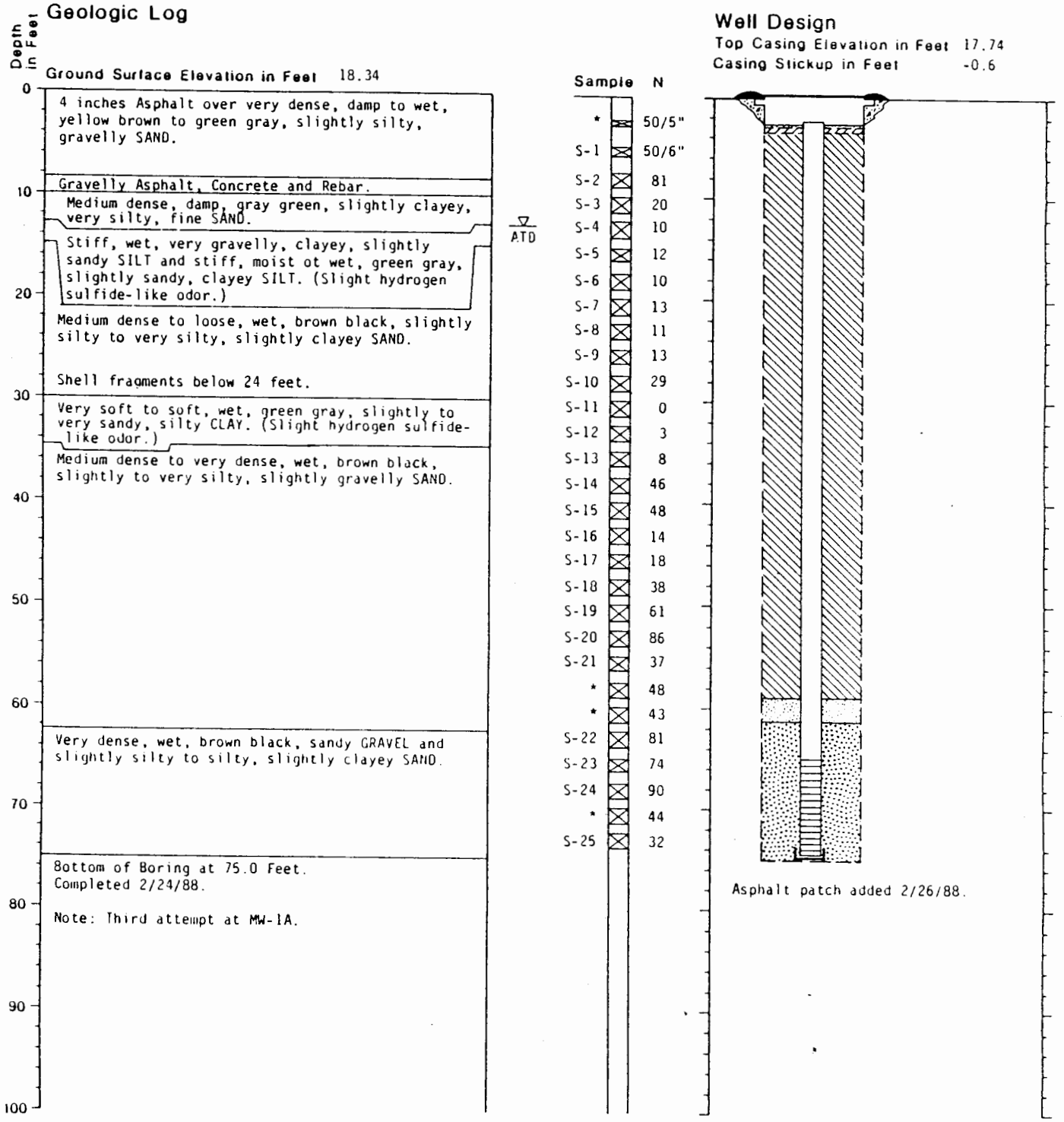

HARTCROWSER

J-3203-08 12/92

Figure A-6-3

Boring Log and Construction Data for Well MW-2

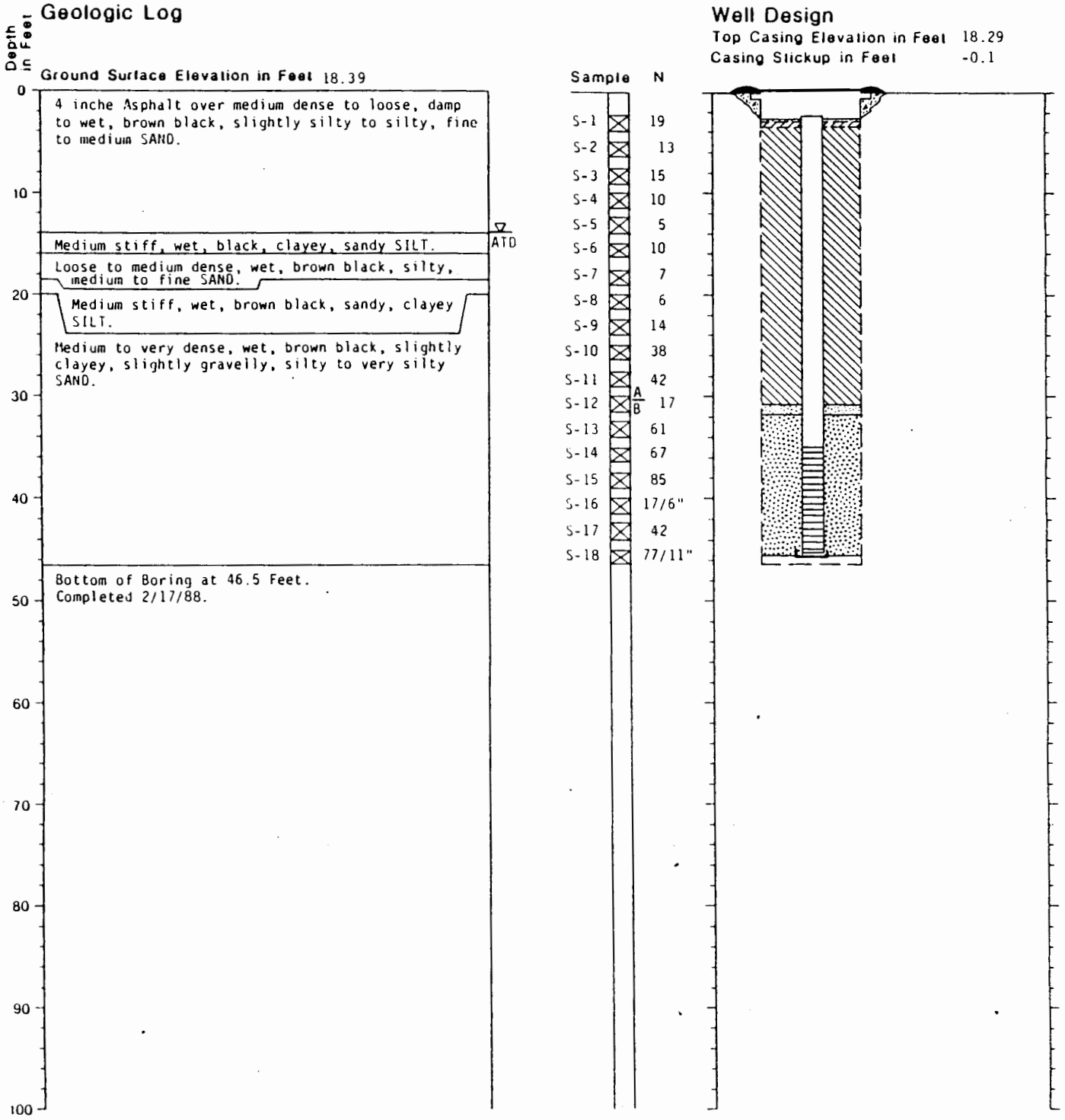

HARTCROWSER

J-3203-08 12/92

Figure A-6-4

Boring Log and Construction Data for Well MW-3

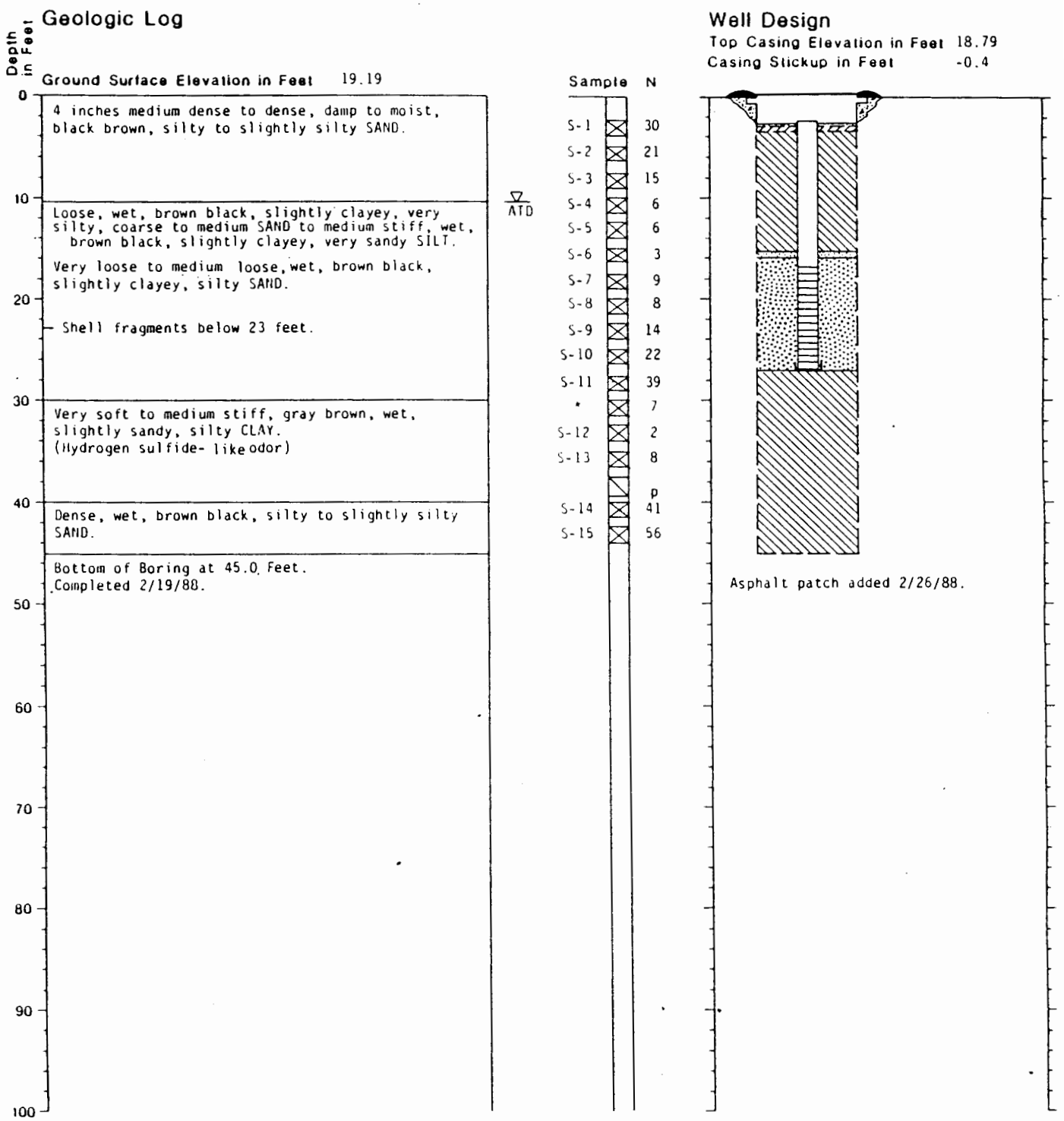

HARTCROWSER

J-3203-08 12/92

Figure A-6-5

Boring Log and Construction Data for Well MW-4

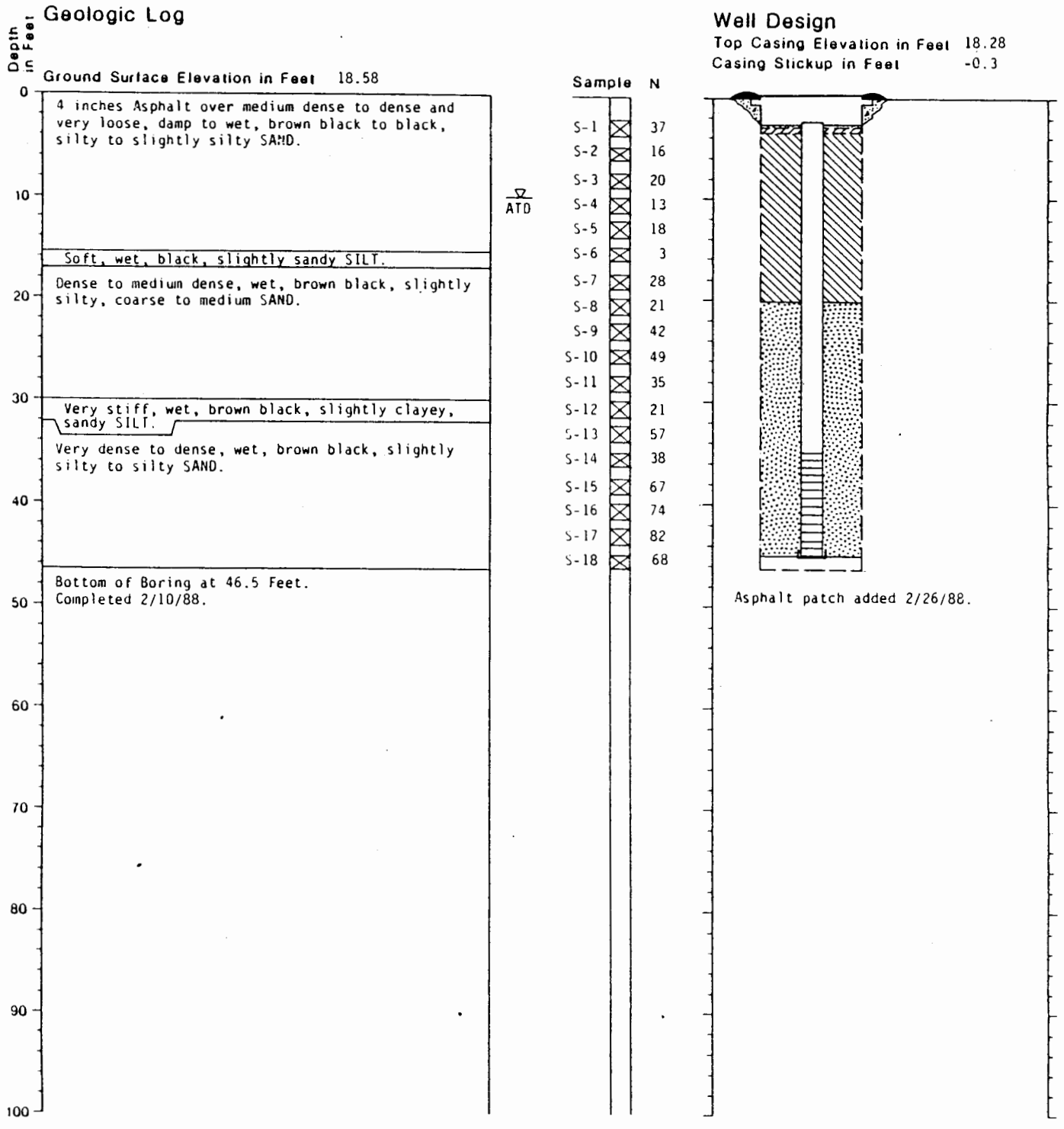

HARTCROWSER
J-3203-08 12/92
Figure A-6-6

Boring Log and Construction Data for Well MW-4A

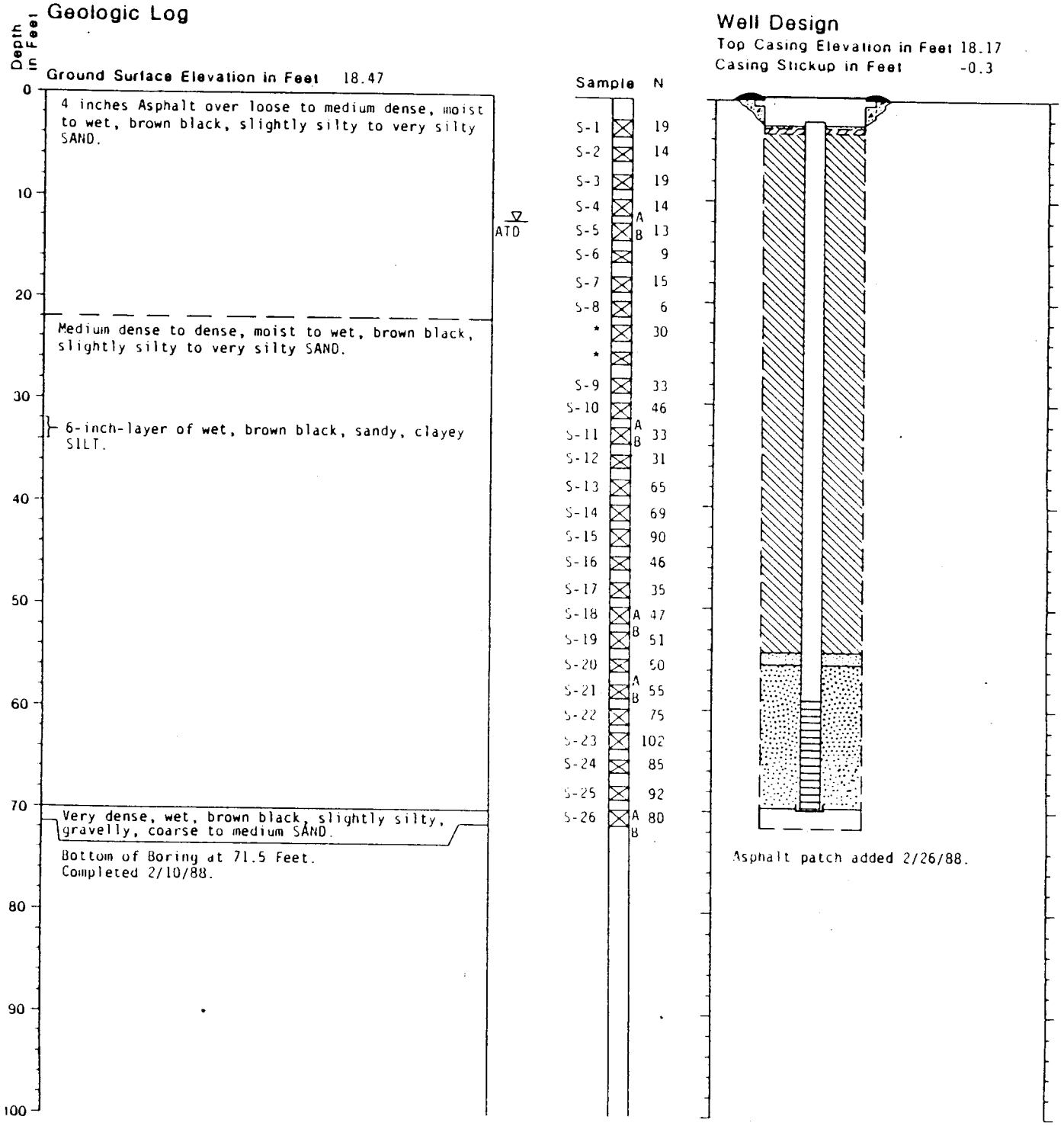

HARTCROWSER
J-3203-08 12/92
Figure A-6-7

Boring Log and Construction Data for Well MW-5

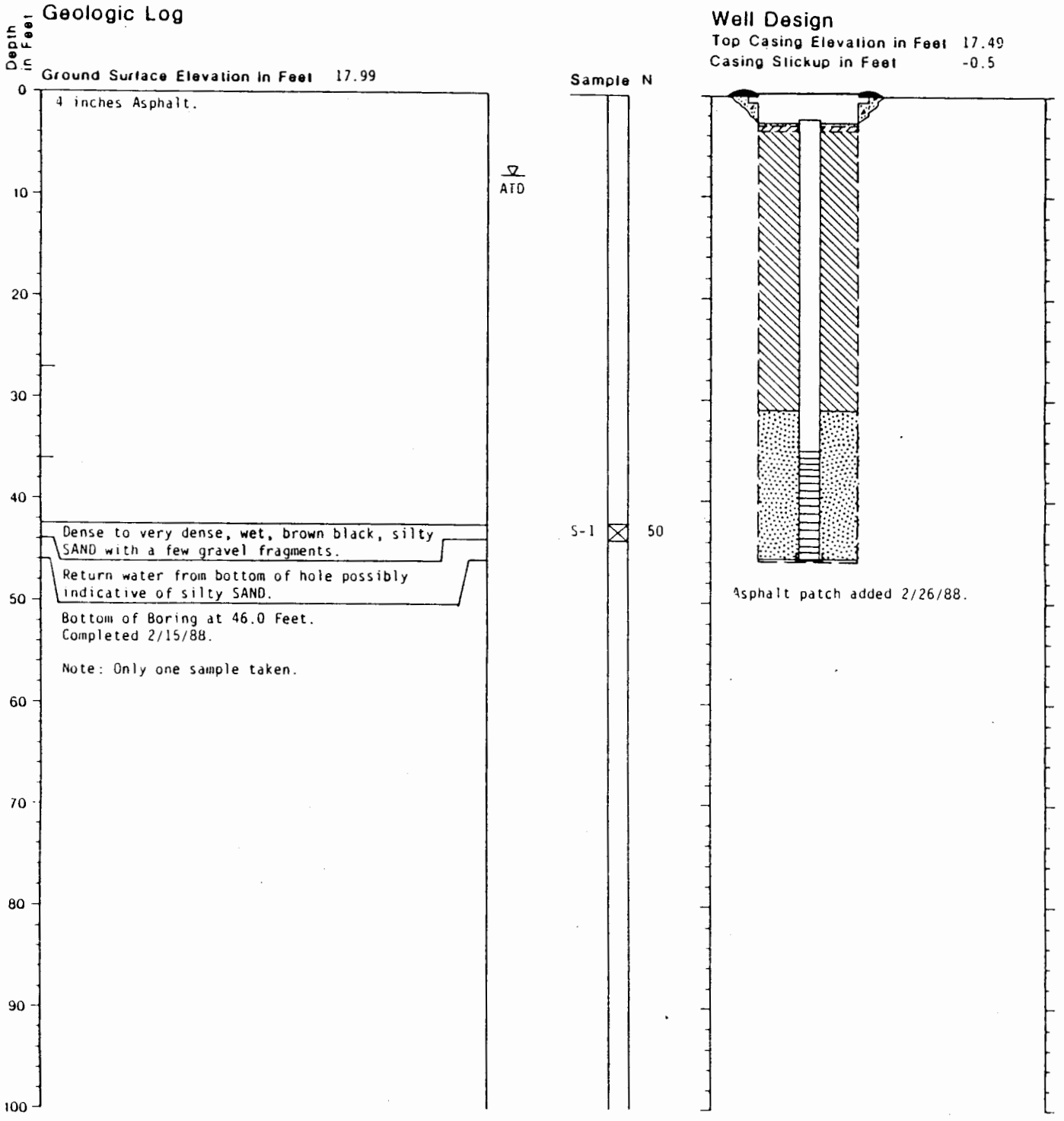

HARTCROWSER

J-3203-08 12/92

Figure A-6-8

Boring Log and Construction Data for Well MW-5A

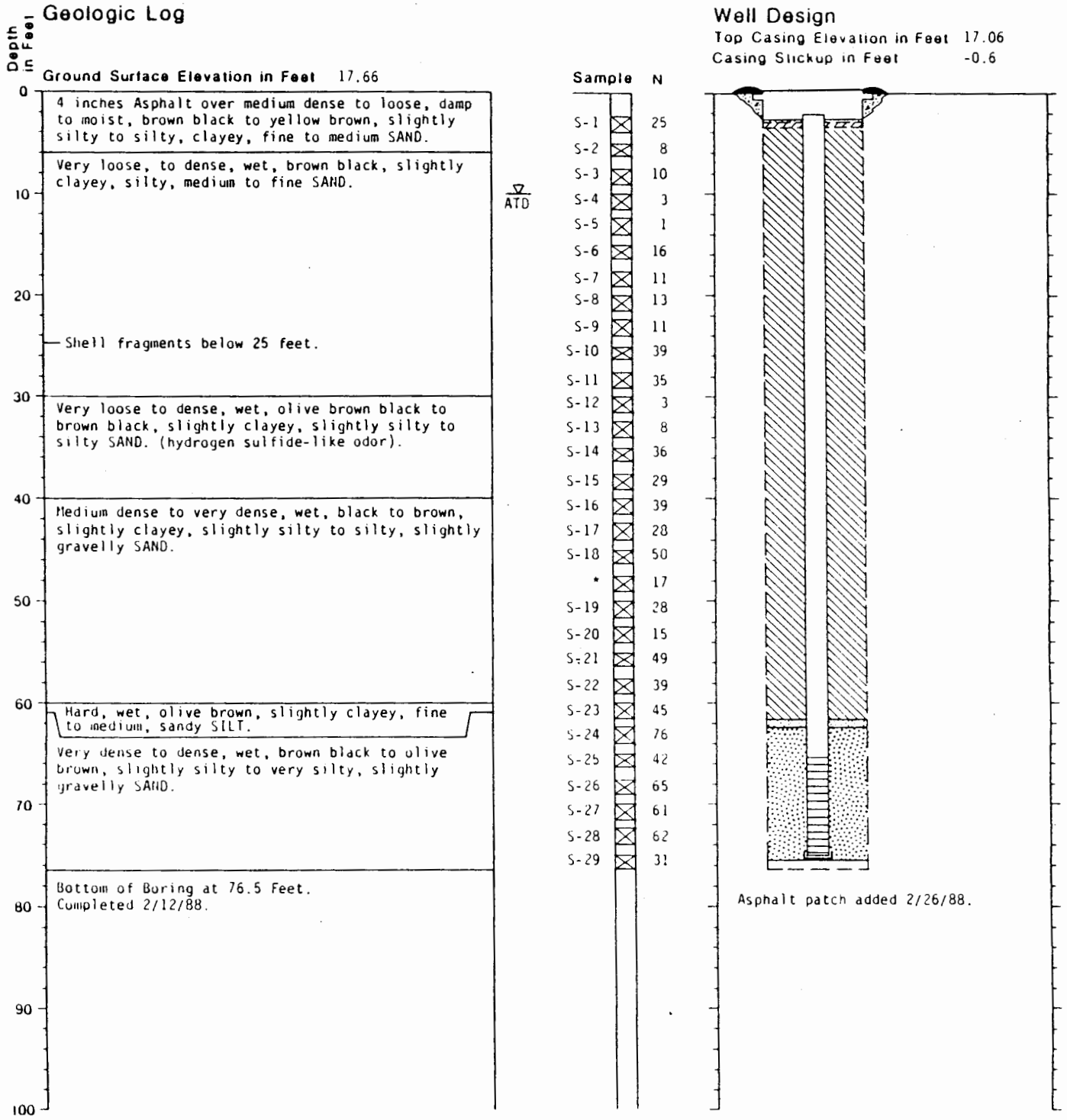

HARTCROWSER
J-3203-08 12/92
Figure A-6-9

Boring Log and Construction Data for Well MW-6

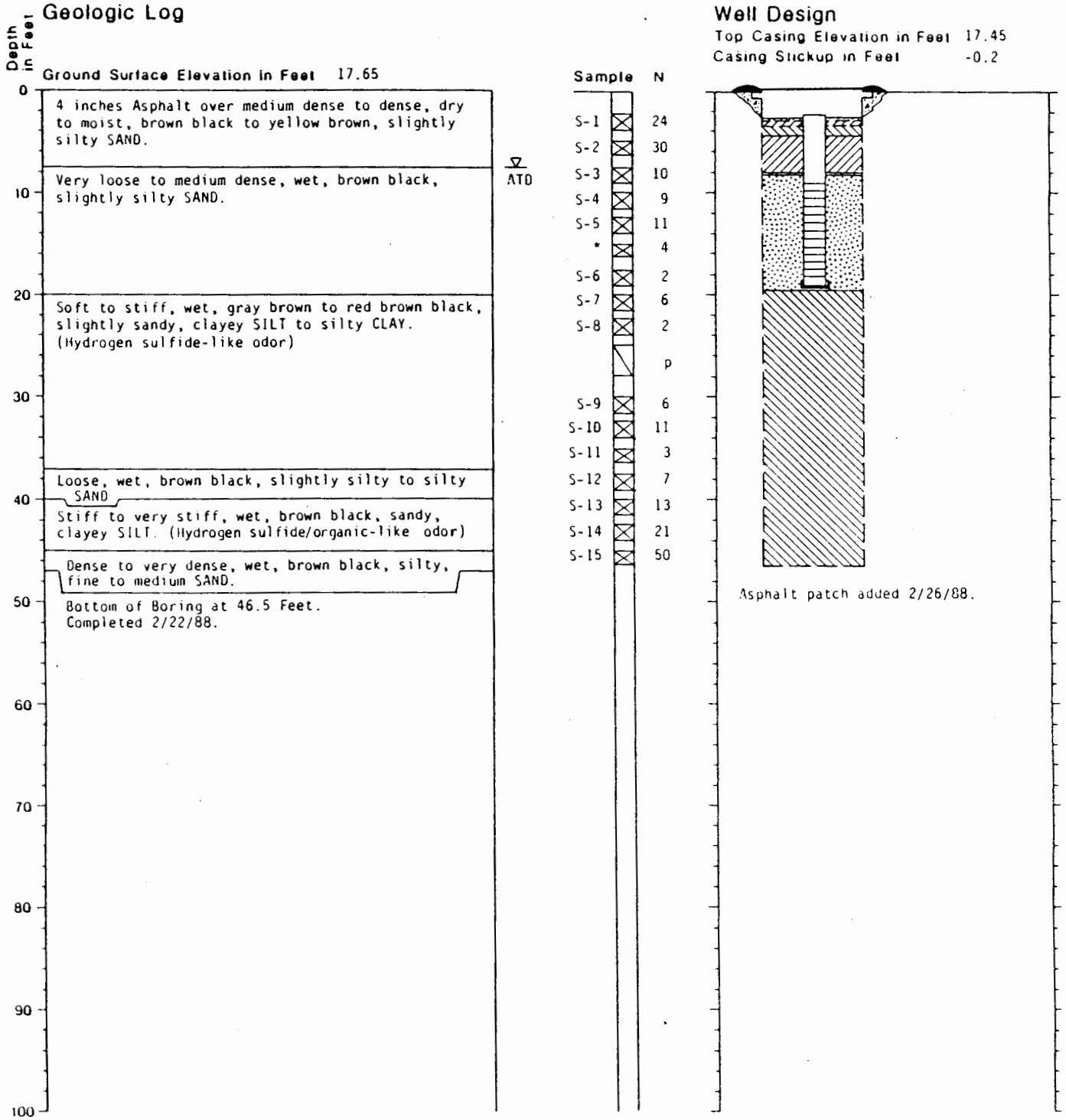

HARTCROWSER
J-3203-08 12/92
Figure A-6-10

Boring Log and Construction Data for Well MW-7

Geologic Log

Depth in Feet

Ground Surface Elevation in Feet 17.70

0 — 4 inches Asphalt over medium dense to loose, damp to wet, brown black, slightly silty, fine to medium SAND.

10 — Very soft, wet, brown black, slightly sandy, slightly clayey SILT. ▽ ATD

20 — Medium dense, wet, brown black, slightly silty, fine to medium SAND.

30 — Very soft to soft, wet, brown black, slightly clayey, very sandy SILT to green brown, silty CLAY.

40 — Medium dense to dense and loose, wet, brown black to green brown, slightly clayey, silty to very silty, fine to medium SAND.

50 — Bottom of Boring at 50.0 Feet. Completed 2/18/88.

60

70

80

90

100

Sample	N
S-1	22
S-2	16
S-3	9
S-4	22
S-5	3
S-6	11
S-7	12
S-8	16
S-9	2
S-10	3
S-11	0
S-12	23
S-13	44
S-14	16
S-15	9
S-16	14
S-17	31
S-18	37
S-19	26

Well Design

Top Casing Elevation in Feet 17.30

Casing Stickup in Feet -0.4

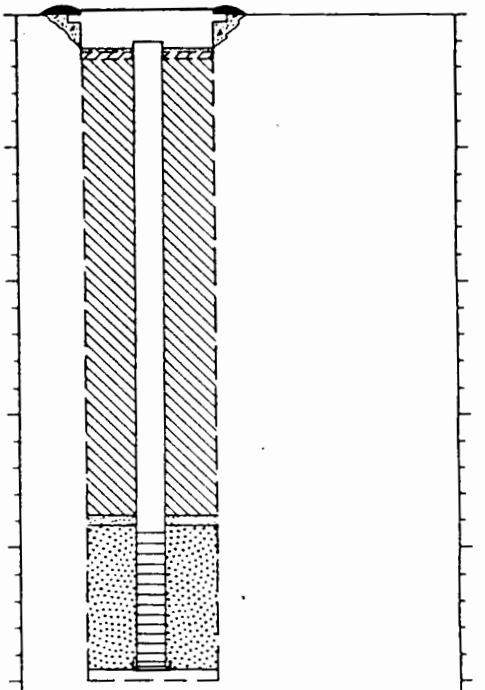

Asphalt patch added 2/26/88.

HARTCROWSER

J-3203-08 12/92

Figure A-6-11

Port of Tacoma
June 3, 1994

ATTACHMENT A-7
HEALTH AND SAFETY PLAN FOR GROUNDWATER SAMPLING
SITCUM WATERWAY REMEDIATION PROJECT

ATTACHMENT A-7
HEALTH AND SAFETY PLAN FOR GROUNDWATER SAMPLING
SITCUM WATERWAY REMEDIATION PROJECT

INTRODUCTION

Hart Crowser, Inc., will perform groundwater sampling as part of the water quality monitoring program for the Sitcum Waterway Remediation Project. Chemical contamination in the groundwater is not expected. However, should groundwater quality change, the Health and Safety Plan will be reviewed and modified as necessary. Major hazards are of physical nature in the form of traffic, machinery, and the potential for physical injuries from impact with containers and the truck chassis.

The requirements of this Health and Safety Plan address the hazards and appropriate hazard controls or protective measures and apply to Hart Crowser personnel, subcontractors, and others present or involved in sample handling.

ASSIGNMENT OF RESPONSIBILITIES

Corporate Health and Safety Manager, David Chawes, C.I.H.

- Agency liaison on matters of health and safety;
- Address matters of corporate health and safety policy;
- Secondary contact in case of illness or injury; and
- Review project Health and Safety Plan.

Project Health and Safety Manager, Philip A. Spadaro

- Develop project Health and Safety Plan;
- Communicate health and safety requirements to involved individuals;
- Consult with Corporate Health and Safety Manager as new site conditions arise; and
- Primary contact in case of illness or injury.

Field Health and Safety Managers, Anne G. Fitzpatrick, David W. Templeton

- Implement health and safety requirements; and
- Take appropriate action as field conditions change.

HAZARD EVALUATION, CONTROL, AND PROTECTIVE MEASURES

Chemical Hazards

Groundwater sampling and sample handling will not present a health hazard because the groundwater at the site does not contain constituents at concentrations expected to cause human health concern during the anticipated contact. Nevertheless, use of coveralls, protective outer wear (such as raincoat), and boots is advised for cleanliness purposes.

Physical Hazards

Machinery

The sampling equipment includes a gasoline-operated compressor. This presents a general physical hazard due to its heavy weight and its loud noise. Further, extreme care to avoid sparks must be exercised while refueling the compressor. Completely fill tank prior to any sampling. , compressor should be placed as far as possible from the well.

Traffic

The wells are located in the Sea-Land terminal. Most of them are in rows between containers. It is important that personnel make themselves visible to the truck drivers and take steps to block traffic as necessary to avoid accidents. sampling locations in a highly visible place. Hart Crowser personnel will exercise extreme caution in areas with heavy vehicular traffic.

Containers

As explained above, the wells are located in rows between containers or chassis. There is the possibility that personnel may bump their heads while standing under a container or chassis. Hart Crowser personnel will use hard hats at all times while on the Sea-Land site.

MEDICAL SURVEILLANCE

The Hart Crowser field representative shall have a current medical surveillance physical as required by the corporate Health and Safety Plan.

CONTINGENCY

In case of serious illness or injury, use the local 911 to summon aid. If it is deemed appropriate to transport the victim to the hospital, all personnel must be familiar with the route to the nearest hospital (see Figure A-7-1).

If unanticipated conditions arise, contact the Hart Crowser Corporate or Project Health and Safety Manager.

TELEPHONE NUMBERS

David Chawes	324-9530 (home: 525-7417)
Philip A. Spadaro	324-9530 (home: 745-6037)
David W. Templeton	324-9530 (home: 487-6049)
Tacoma General Hospital	
General Information	594-1000
Emergency	594-1050
General Emergency	911
Sea-Land	593-1434
Port of Tacoma	383-5841

DOCUMENTATION

Project field personnel shall read and understand this Health and Safety Plan and acknowledge same by signing the consent form on the Hart Crowser field representative's copy.

Record of Health and Safety Requirement Communication

The following personnel were given a copy of the Health and Safety Plan to review for information concerning requirements of work tasks specific to their involvement in the project. By signing, these personnel indicate that they have read the plan including the referenced information and that they understand the requirements which are detailed for work practices on this project.

Field activities shall be documented on a field health and safety report (see Figure A-7-2).

320308\OMMP-ATT.A-7

PRINTED NAME	SIGNATURE	DATE
Philip A. Spadaro		
Anne G. Fitzpatrick		
David W. Templeton		

320308\OMMP-ATT.A-7

PRINTED NAME	SIGNATURE	DATE

320308\OMMP-ATT.A-7

Route to Hospital Map

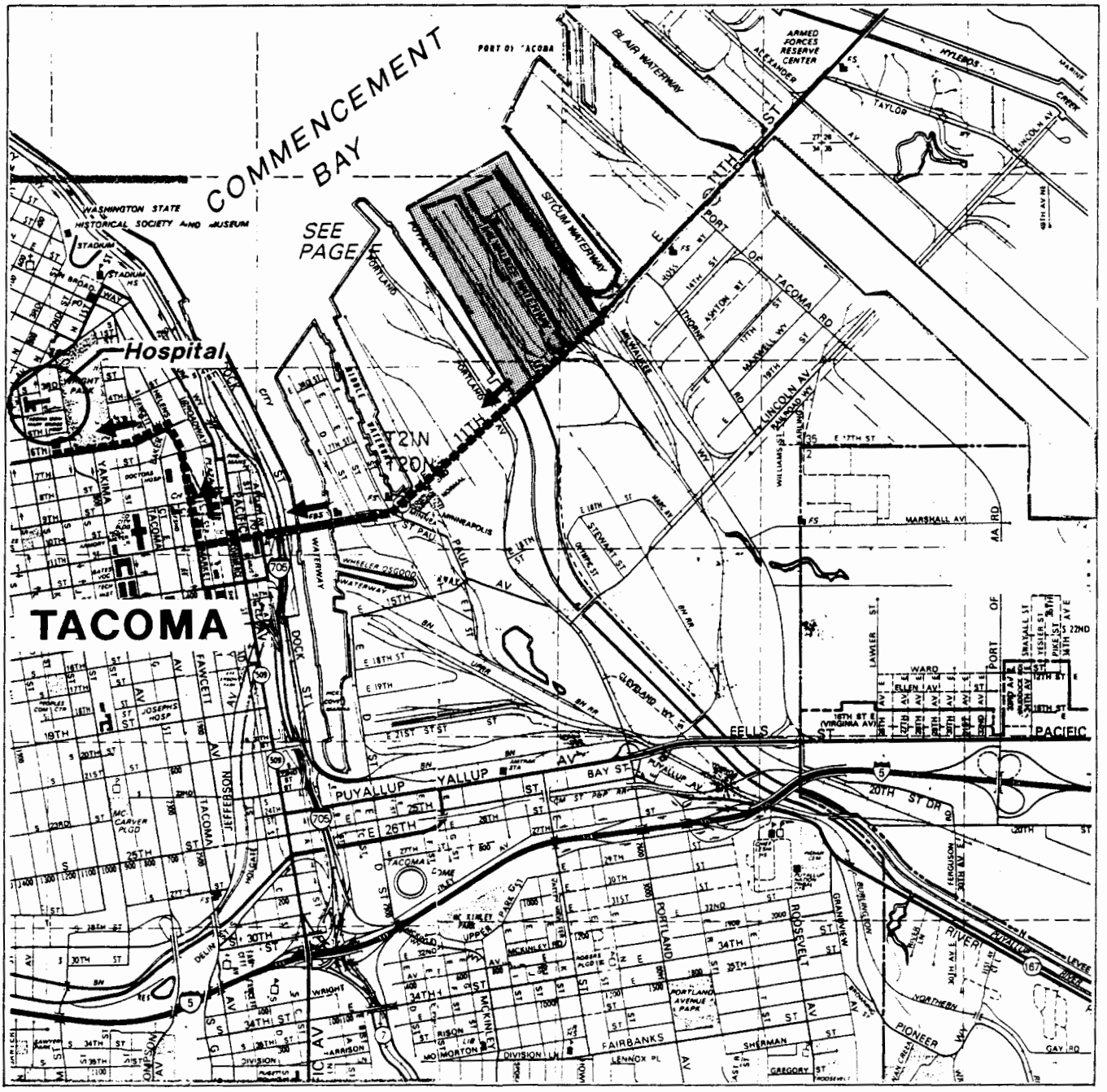

Study Area

N

0 1/2 1

Scale in Miles

HARTCROWSER

J-3203-08 12/92

Figure A-7-1

Field Health & Safety Report

HARTCROWSER

FIELD HEALTH & SAFETY REPORT

JOB NO. ____________
DATE ____________
S M T W Th F S

ARRIVAL TIME: ____________
DEPARTURE TIME: ____________

JOB ____________

LOCATION ____________

CLIENT ____________

FIELD REPRESENTATIVE ____________ PROJECT MANAGER ____________

FIELD H&S MANAGER ____________ PROJECT H&S MANAGER ____________

NAMES OF PERSONNEL ON SITE ____________

SITE ACTIVITIES ____________

POTENTIAL HAZARDS ____________

HAZARD CONTROL USED ____________

PROTECTIVE MEASURES TAKEN ____________

COMMENTS OR OBSERVATIONS ____________

SKETCH POSITION OF EQUIPMENT RELATIVE TO EXPLORATION
INDICATE MONITORING POINT(S) AND PREVAILING WIND DIRECTION

EXPLORATION NO. ________

AIR MONITORING LOG

METER NUMBER 1, TYPE ____________ CALIBRATED ____________ CHECKED ____________

METER NUMBER 2, TYPE ____________ CALIBRATED ____________ CHECKED ____________

BACKGROUND READINGS: METER 1 ____________ METER 2 ____________

TIME	METER 1	METER 2	COMMENTS

HARTCROWSER
J-3203-08 12/92
Figure A-7-2

Port of Tacoma
April 6, 1994

APPENDIX B
SEDIMENT SAMPLING OPERATIONS MANUAL
SITCUM WATERWAY REMEDIATION PROJECT

This appendix names specific contractors for various aspects of work. However, the Port reserves the right to select other qualified contractors with EPA approval.

CONTENTS

Page

APPENDIX B
SEDIMENT SAMPLING OPERATIONS MANUAL
SITCUM WATERWAY REMEDIATION PROJECT B-1

B.1 INTRODUCTION B-1

B.1.1 Purpose and Scope of this Document B-1

B.2 PREPARATION FOR SAMPLING B-1

B.2.1 Review this Appendix B-1
B.2.2 Contact the Port of Tacoma B-1
B.2.3 Contact Analytical Laboratories B-2
B.2.4 Contact Subcontractors B-2
B.2.5 Organize Field Supplies B-3
B.2.6 Install Tide Gauges B-3
B.2.7 Setting up the LASERTRAK® Location Control System B-3

B.3 SEDIMENT SAMPLING PROCEDURES B-4

B.3.1 General Approach B-4
B.3.2 Crew and Vessel Specifications B-4
B.3.3 Arrival at the Site B-4
B.3.4 Phase 1 Area and Habitat/Mitigation Area Sediment Sampling B-5
B.3.5 Phase 2 Area Sediment Sampling B-7
B.3.6 Field Equipment Decontamination B-8
B.3.7 Location Control and Documentation B-9
B.3.8 Sediment Quality Sample Handling B-11

B.4 POST SAMPLING PROCEDURES B-12

B.4.1 Sample Transport and Log-In B-12
B.4.2 Chain of Custody B-12
B.4.3 Field Report B-13
B.4.4 Confirm Sampling Locations B-13

TABLES

B-1 People to Contact Prior to Sampling Event B-14
B-2 Equipment and Supplies B-15
B-3 Sample Containers, Preservation, and Holding Times for Sediment Samples B-16
B-4 Pre-Determined Phase 1 and Phase 2 Sediment Quality Sampling Locations B-17
B-5 Pre-Determined Habitat/Mitigation Sediment Quality Sampling Locations B-18

CONTENTS (Continued)

Page

FIGURES

B-1 Vicinity Map
B-2 Proposed Sediment Quality Monitoring Sampling Location Plan
B-3 Horizontal Control Survey Map
B-4 Sediment Sampling Form
B-5 van Veen Grab Sampler
B-6 Sample Identification Label
B-7 Field Sample Custody Record Form
B-8 Sample Tracking Form
B-9 Custody Seal

ATTACHMENT B-1
QUALITY ASSURANCE PROJECT PLAN
FOR SEDIMENT QUALITY ANALYSIS CHEMISTRY
SITCUM WATERWAY REMEDIATION PROJECT

ATTACHMENT B-2
HEALTH AND SAFETY PLAN FOR SEDIMENT SAMPLING
SITCUM WATERWAY REMEDIATION PROJECT

APPENDIX B
SEDIMENT SAMPLING OPERATIONS MANUAL
SITCUM WATERWAY REMEDIATION PROJECT

B.1 INTRODUCTION

The Port of Tacoma and EPA will assess sediment quality in those areas of the Sitcum Waterway where sediments have been removed by dredging. The purpose of this activity is to evaluate the effectiveness of remediation with respect to SQOs and SRALs. The Port will also document quality of the surface materials in the habitat/mitigation fill before placement of clean imported materials which will provide the select surface substrate. Further, the Port will provide long-term sediment quality monitoring of the habitat mitigation area by sampling and analyzing the upper 2 centimeters of the fine-grained substrate.

This assessment will include sediment sampling of Phase 1 and Phase 2 areas of the Sitcum Waterway by van Veen grab and diver-collected sampling methods.

B.1.1 Purpose and Scope of this Document

This appendix has been prepared to provide guidance to field personnel involved in the offshore sediment sampling program. In addition, this work plan specifies the following:

- Set-up procedures and guidelines;
- Sediment sampling procedures; and
- Sampling handling procedures and documentation.

B.2 PREPARATION FOR SAMPLING

B.2.1 Review this Appendix

Before going into the field, become familiar with this Sediment Sampling Operations Appendix. A number of issues need to be addressed and planned before any field work can begin. If any questions arise, ask the project manager. Discuss the details of the job with the field task manager.

B.2.2 Contact the Port of Tacoma

Table B-1 lists all the people that should be contacted prior to field sampling effort. Begin contacting individuals at least one month in advance. Notify the Port of Tacoma Project Manager of the sampling

schedule and required dock space. Also, discuss where Hart Crowser vehicles should be parked during field activities.

Notify the Port of Tacoma Operations Manager/Engineer of sampling schedule and clarify the following issues:

- Ship and berth space schedule (proposed sampling dates may need to be changed depending on this access);
- Availability of dock space for sampling vessel;
- Installation the tide gauges, preferably one on each pier; and
- Other unforeseen restrictions.

B.2.3 Contact Analytical Laboratories

At least one month prior to the sampling event, the laboratory should be notified and the following should be discussed with the Laboratory Project Manager:

- Date of sampling and date of sample delivery to laboratory;
- Tests to be performed;
- Number and type of bottles needed and time of bottle delivery;
- Date results are needed;
- Sample disposal; and
- Other work order issues.

A work order should be completed at this time and field QA/QC requirements, documentation, frequency, and nomenclature discussed with the Hart Crowser Project and Task Managers.

Upon receiving bottles from the lab, verify that all necessary bottles are present, and familiarize yourself with the bottles and which analyses go with which bottles. Review required minimum sample volumes.

Organize bottles into coolers. Prepare necessary ice packs and bubble wrap for container protection.

B.2.4 Contact Subcontractors

Planned field work must be coordinated with the sampling vessel owner/operator (i.e., Underwater Specialists Inc., SeaLease, or other qualified contractor) and the location control (i.e., lasertracking system or other location control system or method as approved by EPA) specialists (i.e., Chris Ransome and Associates [CRA] or other qualified contractor). The following specifications should be discussed:

- Availability and duration;

- Number of personnel needed for operation and how many personnel can be onboard at one time;
- Set up time required (travel, shipping, software, maps); and
- Other work order issues.

The responsibilities of each subcontractor will be discussed in detail later in this appendix. Refer to Table B-1 for the names and phone numbers of people to contact.

B.2.5 Organize Field Supplies

Start organizing field equipment at least one week in advance of established sampling date. Contact the Field Equipment Manager and reserve a Hart Crowser vehicle and special supplies.

At this time, complete a Field Supplies/Equipment form. This will allow the Field Equipment Manager enough time to get everything ready. Table B-2 presents a list of required supplies and equipment.

Also, obtain northing and easting coordinates for the newly proposed sampling locations, if any. These coordinates will be added to the location control software program.

B.2.6 Install Tide Gauges

Field work cannot begin until tide gauges have been installed in the Sitcum Waterway. Whether the Port of Tacoma or Hart Crowser installs them, be sure that they are correctly in place at least one day before field work begins. For reference on Terminal 7, the top of the concrete is at 18.0 feet elevation and the top of concrete on the Sea-Land pier is 20.5 feet elevation based on Port of Tacoma and U.S. Army Corps of Engineers datum.

If absolutely necessary, the tide readings can be measured manually from the pier faces, but this is very time consuming.

B.2.7 Setting up the LASERTRAK® Location Control System

Contact location control specialists (CRA or other qualified contractor) and have the prism, tracking device, and telemetry sent to Hart Crowser. Set up the LASERTRAK® system and all of the necessary backsights the day before sampling begins. If possible, set up the prism and telemetry aboard the vessel. Refer to Table B-1 for CRA contacts.

One person will be responsible for tracking the boat from land and another person will be aboard the vessel monitoring vessel position, updating

northing and easting coordinates for sampling locations, and communicating with the tracker.

Alternatively, location control may be achieved with the Del Norte Transponder and Global Positioning System (GPS) configuration as currently employed by Manson Construction and Engineering Company (Manson) or other location control system or method as approved by EPA.

B.3 SEDIMENT SAMPLING PROCEDURES

This section describes the methods and strategies to be used in performing the offshore field work. This section also describes step-by-step procedures to successfully complete and execute field objectives. The objective will be to determine sediment quality after dredging by a series of analyses for chemical and geotechnical parameters.

B.3.1 General Approach

Sediment samples will be collected for chemical and physical analyses. These analyses are described in Attachment B-1 of this document. For clarity, sediment sampling tasks have been divided into Sitcum Waterway Phase 1 area and Sitcum Waterway Phase 2 area. Refer to Figure B-2 for a diagram of the Sitcum Waterway.

A 0.1 cubic meter van Veen sampler will most likely be used to collect the sediments in the Phase 1 area. A diver-pushed core sampler will most likely be used to collect remaining sediment in the Phase 2 area. These methods will be described in detail later in the Section B.3.4 and B.3.5.

B.3.2 Crew and Vessel Specifications

Field sampling activities will be accomplished in a joint effort by Underwater Specialists, Inc. (USI) or another qualified contractor and on-site Hart Crowser representatives. Operation of the LASERTRAK® system and sample processing will be the responsibility of Hart Crowser personnel.

B.3.3 Arrival at the Site

As equipment is being loaded aboard the vessel, stow the sampling and storage equipment in appropriate areas in accordance with the deck layout work area plan. If necessary, use this time to modify the work areas (Exclusion Zones, Decontamination Zones, and Support Zones) and caution-tape off areas to distinguish them from each other.

Check the location control equipment to make sure everything is running correctly. State plane coordinates for the proposed sampling locations should already be input to the location control software program for referencing.

Before leaving the dock, conduct a brief Health and Safety meeting to observe the zoned areas, to discuss potential contamination migration pathways and their preventions, and to observe potential vessel hazards. Be sure that everyone understands and signs the Health and Safety Plan.

B.3.4 Phase 1 Area and Habitat/Mitigation Area Sediment Sampling

Sediment in the Phase 1 area of the Sitcum Waterway will be sampled at the conclusion of sediment removal activities to determine compliance with SQOs. The sampling locations, testing parameters, and decision-making framework to be applied to these post-construction samples is described in Section 4.0. In addition, sediments in the Phase 1 area will undergo long-term monitoring as described in Section 4.7.

Sediment from the Blair Waterway that is placed in the habitat/mitigation area will be sampled and analyzed before placement of the imported surface materials. The locations of these samples and the related testing requirements are described in Section 4.9. In addition to these post-construction samples, monitoring will be performed on surface sediments of the habitat/mitigation area at selected intervals as described in Section 4.9. The locations of these samples will be determined by the Port and EPA based on the sediment conditions at the time of sampling. Chemical analysis of these long-term monitoring samples will be for metals and PAH as specified in Section 4.10.

Sampling procedures and sample handling protocols for these sediment sampling activities are described below.

van Veen Sediment Sampling. Sediment samples will be collected in general accordance with Puget Sound protocols as outlined in the Puget Sound Estuary Program (PSEP) (Tetra Tech, 1986) and as specified herein. If there are procedures or protocols specified below that conflict with PSEP, the statements of this document shall take precedence. A 0.1 cubic meter stainless steel van Veen grab sampler (Figure B-5) will be used to collect sediment samples as follows:

- For post-construction sediment sampling in the Phase 1 area and the habitat/mitigation area, the full van Veen recovery (approximately ½ to 1 foot) will be used.

- For long-term sediment sampling in the Phase 1 area and the habitat/ mitigation area, only the top 0 to 2 cm of sediment recovered will be used.

Sediment samples will be collected in the following manner:

1. A laser tracking system (described in Section B.3.7) is used to help maneuver the vessel to pre-determined locations.

2. The van Veen jaw assembly is decontaminated using procedures specified in Section B.3.6 of this document.

3. At the predetermined location, a cable winch lowers the cocked van Veen grab sampler overboard.

4. The cable to the van Veen grab sampler is drawn taut and perpendicular to the water surface. Once this had been achieved, the state plane coordinates are determined using the laser range-azimuth survey techniques. Tide gauge readings, depth to sediment (DTS), and vessel depth soundings will also be recorded (Section B.3.7).

5. The van Veen jaw assembly is then lowered to the bottom at a controlled speed of approximately 1 foot/second.

6. The van Veen grab sampler is retrieved and brought on board the vessel. Sediment samples in which the top 0 to 2 cm of sediment is being analyzed will be inspected relative to the following criteria:

   - The sampler is not overfilled;
   - Overlying water is present;
   - Overlying water is not excessively turbid;
   - The sediment surface is relatively flat; and
   - The desired penetration depth is achieved.

   Samples collected for the top 0 to 2 cm of sediment not meeting these criteria will be rejected. For all sediments collected with the van Veen sampler, the overlying water will be carefully decanted off.

7. The required sediment interval (the entire contents of the van Veen grab or the top 0 to 2 cm) is placed directly into a decontaminated stainless steel bowl. Uneven bottom conditions often result in limited recoveries. Due to variable recovery, repeated (3 to 4) van Veen

deployments will sometimes be required to fill the necessary volume requirements. If repeated deployments are necessary, the recovered sediment will be homogenized. Samples for chemistry analysis will then be placed into appropriate sample containers obtained from laboratories performing the analyses (see Table B-3). Sediment sampling forms (Figure B-4) should be completed.

8. Sediment descriptions are performed in accordance with ASTM methods.

9. The sample containers are sealed (Figure B-7), labeled (Figure B-8), and placed on ice. Sediment samples are then transported to Hart Crowser and refrigerated at 4°C until transport to analytical laboratories. Table B-3 indicates preservation and holding times for sediment samples.

Refer to Section B.3.8 for further details on proper sample handing.

B.3.5 Phase 2 Area Sediment Sampling

Sediment samples collected from Phase 2 area (Figure B-2) will be recovered by divers. Depending on conditions at the individual sampling locations, samples will be collected by either manual corer or other applicable methods in order to collect samples of sediment, which may still remain above the riprap, or easily accessible between the riprap.

In the Phase 2 area, the divers will use hand-pushed corers, trowels, or shovels for sample collection using the following procedure:

1. Equipment will be decontaminated before use (Section B.3.6).

2. Pre-determined sample locations will be identified on the site plan. The lack of accessible sediment at the pre-determined location will require that the diver locate an area with sufficient, accessible sediment.

3. Precise location of diver collected sample site will be measured and recorded by the underwater survey subcontractor.

4. Diver will perform manual collection of sample to desired depth and retrieve sample in a core barrel or other sample container to be hoisted aboard the vessel. At a given location, sufficient sample will be collected and homogenized.

5. Diver will be sprayed with seawater before boarding the vessel.

6. Samples for chemistry analyses will then be placed into appropriate sample containers obtained from the laboratories performing the

analyses (Table B-3). The sample containers are sealed (Figure B-7), labeled (Figure B-6), and placed on ice. Sediment samples are then transported to analytical laboratories.

7. Hart Crowser representative will confirm and record the bent number, pile number, and distance upslope from the face of the pier where sample was collected.

8. The date, time, tidal elevation, and vertical DTS will also be recorded. The DTS will be measured by a pressure gauge attached to the diver's belt.

The diver requires special safety and attention, which will be the responsibility of the subcontractor.

B.3.6 Field Equipment Decontamination

Decontamination is necessary for all equipment which contacts any sample to be used for chemical testing. The decontamination procedure will utilize a detergent wash and successive rinses between all sampling locations. No solvents or acid washes will be used.

Solvent or Acid Washes Excluded. Acid or solvent washes will not be used because of safety considerations, rinseate disposal, and sample integrity. The use of acids or organic solvents on the congested deck of the vessel may pose a safety hazard to the crew. Disposal and spillage of acids and solvents during field activities aboard ship poses an environmental concern. Residues of solvents and acids on sampling equipment may affect sample integrity for chemical testing.

Decontamination Protocol. This decontamination procedure, based on PSEP Protocols (Tetra Tech, 1986), is designed to prevent cross-contamination between sample locations, contamination from the field crew, or contamination from the equipment. Equipment for reuse will be decontaminated between sample locations aboard the vessel according to the procedure below before each use:

- Seawater will be sprayed over equipment to dislodge and remove any remaining sediments from previous sample location.

- Surfaces of equipment contacting sample material will be scrubbed with brushes using an Alconox solution.

- Scrubbed equipment will be rinsed and scrubbed with clean tap water.

- Equipment will undergo a final spray rinse of deionized water to remove tap water impurities.

This process will be repeated prior to use at the next sediment location.

B.3.7 Location Control and Documentation

This section summarizes the methods of location control utilized for all sampling activities. The following parameters will be documented at every sample location:

- Horizontal location in State Plane Coordinates, as appropriate;
- Vertical elevation in feet (including mudline and tidal elevation above mudline);
- Time and date; and
- Tidal elevation referenced to Mean Lower Low Water (MLLW). All references to MLLW used in this study are based on the Port of Tacoma and U.S. Army Corps of Engineers elevation datum.

Parameters listed above will be measured using combinations of:

- Range Azimuth Laser Tracking or the Del Norte Transponder and GPS configuration, or other location control system or method as approved by EPA;
- Elevation Tide Gauges; and
- Electronic Depth Sounders and Hand Measurements.

The other location control system and the Del Norte system are currently being employed by Manson under an EPA-accepted procedure. The Range-Azimuth Laser Tracking system method is discussed below.

B.3.7.1 Range-Azimuth Laser Tracking

Equipment. Horizontal location control for all sampling activities will be achieved by range-azimuth laser positioning methods using the LASERTRAK® system (provided by CRA or other qualified contractor). The LASERTRAK® system is set up at a reference point on land and measure both the distance to the sampling location and the azimuth angle from that sampling location to other established survey points. See Figure B-3 for horizontal control survey points. The equipment used for communicating the laser tracking coordinates to the vessel is a Motorola "Miniranger"® microwave radiopositioning system. Northing and easting coordinates of the vessel are updated every 2 seconds and radioed directly to the computer screen. The whole LASERTRAK® system includes the following components:

- Telescope and mechanical survey control for target tracking;
- Omni cluster 360 rotational reflective prism;
- UHF radio telemetry modules with interfacing;
- On board ship computer/graphics display module; and

- Direct computer interfacing from the laser to the vessel computer.

Procedure. The following procedures will be executed by a Hart Crowser representative aboard the vessel for each van Veen sampling deployment in the Phase 1 area:

1. A grid system is established across the waterway based upon reference points with known northing and easting coordinates. These State Plane Coordinates are supplied by the Port.

2. A transit is positioned at a known location along the perimeter of the waterway. The sampling vessel is equipped with a lap top computer and a 360 degree reflective prism attached on top of the sampling A-frame.

3. A technician located on shore visually tracks the vessel using the LASERTRAK® telescope.

4. Using at least two fixed known coordinates, the laser system sets up a latitude/longitude grid pattern based upon azimuth bearings from North, over the Sitcum Waterway. This grid pattern, combined with azimuth readings, gives an accurate boat location anywhere in the waterway as long as the prism is visible. The horizontal accuracy of the LASERTRAK® system is approximately one foot.

5. The laser takes a reading off the prism every two seconds and transmits the coordinates to the onboard computer through UHF radio telemetry.

6. The onboard computer then updates the fixed positions. The position is shown both in State Plane Coordinates and graphically on a video screen.

   The coordinates are communicated in two ways. The first is a digital reading of northings and eastings, which are recorded before and after sampling. The second is an area grid map displayed in feet on a video screen to help position the boat. The sampling location is in the center of the grid and the ship's location is displayed as a moving dot on that grid pattern. The scale of the grid can be changed as the vessel gets closer to the pre-determined sample location (Tables B-4 and B-5). During sampling, boat position can be monitored constantly using this computer display.

7. When the sampler is deployed, actual northing and easting display coordinates are recorded. A field representative records these coordinates at the time of entry and exit for project documentation.

8. The time of day, tide gauge reading, and the DTS are also recorded.

B.3.7.2 Elevation

The elevation parameters measured are DTS (Mudline) and tidal readings (for elevation reference). The DTS is measured before and after each sampling event. Vertical measurements are taken by hand-held weighted tape and checked with an electronic echo sounder. The incremented weighted tape is dropped off the bow of the boat, pulled taut from the bottom and measured to the nearest foot. These measurements are then confirmed with an echo depth sounder on board the vessel. The echo sounder method determines depth by bouncing sound waves off the mud layer and back to a receiver.

Tidal readings will be taken from tide gauges installed in the Sitcum Waterway. Tide elevations and time are monitored and recorded before and after each sample is collected to the nearest 0.5 foot. Where tide gauges cannot be seen, depth to water (DTW) measurements will be taken from the underside of the piers themselves. Sample elevations are calculated using a reference elevation of 18 feet MLLW for the top of concrete on Terminal 7 and 20.5 feet MLLW for top of concrete on Sea-Land Pier.

B.3.8 Sediment Quality Sample Handling

Hart Crowser field personnel will log each sample and package samples for transport. Samples will be transported to the Hart Crowser soils laboratory for further processing or taken directly to Laucks Testing Laboratory for analysis.

Sample Logging in the Field. Samples will be inspected for signs of excessive disturbance and appropriate recovery. After samples are deemed acceptable, the following information will be recorded on the field log sheet:

- Date, time, and name of person logging sample;
- Sample location number;
- Depth of water at the location;
- Sediment sample depth;
- Sample recovery; and
- Sample description.

Sample Packaging in the Field. Samples from the van Veen, the push corer, and those collected with a shovel or trowel will be homogenized in a stainless steel bowl and placed in appropriate containers supplied by the laboratory.

The sample containers are then sealed, labeled, and placed on ice aboard the vessel. Sediment samples are then transported to Hart Crowser and refrigerated until transport to analytical laboratories.

B.4 POST SAMPLING PROCEDURES

B.4.1 Sample Transport and Log-In

Sample containers will be clearly labeled with the project name and number, sampling location, sample identification, date, and sampler's initials. Samples will be kept on ice while in transit.

The holding times of all samples will be verified prior to delivery of the samples to the analytical laboratory. A Laboratory Services Work Order form will accompany the samples. Samples remaining at Hart Crowser pending chemical analysis results will be kept in refrigeration.

B.4.2 Chain of Custody

This section provides guidance on labeling and custody of samples Hart Crowser personnel will follow.

Sample Labeling

Sample labels will clearly indicate sampling locations and sample number. Depth interval, date, sampler's initials, and any pertinent comments will also be included. Labels will be filled out at the time of sampling. A typical sample label is presented on Figure B-6.

Sample Custody

Definition of Custody. After recovery, samples will be maintained in Hart Crowser's custody until formally transferred to another party. For purposes of this work, custody will be defined as follows:

- In plain view of the field representatives;
- Inside a cooler which is in plain view of the field representative; or
- Inside any locked space such as a cooler, locker, car, or truck to which the field representative has the only immediately available key(s).

Custody Records. A chain of custody record will be initiated at the time of sampling for each sample collected. This record will be signed by the field representative and others who subsequently hold custody of the sample. A typical custody form is presented on Figure B-7.

Sediment samples will be transported to Hart Crowser's soils laboratory for soil classification and sample packaging for chemical testing. All the samples will be logged in on the Hart Crowser internal sample tracking form (Figure B-8). The soils laboratory manager will keep all samples under his custody while tests are performed.

A typical custody seal for sediment and water samples is shown on Figure B-9.

A copy of this form with all the appropriate signatures will be returned to Hart Crowser with the sample results and is to be kept in the project notebook.

B.4.3 Field Report

While conducting field work at the site, the Hart Crowser field representative will document pertinent observations and events in a daily field report. Record on the field report:

- Your time of arrival and departure from the site;
- Observations regarding sampling equipment and conditions;
- Arrival and departure of client or agency representatives, topics discussed, questions or issues to be resolved; and
- Where duplicative samples were collected from.

Upon completion of all field procedures, a field report must be written, documenting all field activities. Be sure to include the names of any site visitors. A copy of this field report will go into the project file and another one to the Hart Crowser project manager.

B.4.4 Confirm Sampling Locations

After offshore field activities have been completed, the Sitcum Waterway Basemap should be updated with the actual sampling locations. Check all the field data and submit State Plane Coordinates for the sampling locations to the drafting department.

320308\OMMPAPPB.FR

Table B-1 - People to Contact Prior to Sampling Event

Agency	Title	Name as of 12/93	Action/Purpose	Telephone Number
Port of Tacoma	Project Manager	Dick Gilmur	Inform of schedule	383-5841 Tacoma
	Project Engineer	Doug Saathoff	Tide gauges; waterway clearance	383-5841 Tacoma
Underwater Specialists Inc.*	Vessel Operator/Owner	Matt Kramer	Reserve vessel and diver	1-800-439-7356 Port Orchard
CRA*	Owner/Operator	Chris Ransome	Rent LASERTRAK® system	(713) 932-9891
Lauck's Testing Laboratory*	Hart Crowser Project Manager	John Buerger	Obtain bottles; notify samples delivery date	767-5060 Seattle
Beak Consultants*	Engineer	Bob Suggs	Rent van Veen sampler	823-6919 Kirkland
Hart Crowser*	Project Manager	Philip Spadaro	Questions	324-9530 Seattle
	Task Manager	David Templeton	Consult for details	324-9530 Seattle

* Or other qualified contractor.

320308\OMMPAPPB.fr

Table B-2 - Equipment and Supplies

Item	Quantity
Deionized water in jugs	5 gallons
Deionized water in clean amber bottles	3 gallons
Tap water in jugs	5 gallons
Alconox	10 packets
Scrub brushes	4
Wash buckets	2
DI sprayer	1
Plastic sheeting	1 roll
Plastic bags	5 bags
Paper towels	2 rolls
Inner gloves (N-dex)	2 boxes
Outer gloves (Scorpio)	10 pairs
Sulfide badges	5
MSA 361	1
Poly coated Tyvek	20
Caution tape	1 roll
Personal flotation devises	5
Stainless steel spoons/trowels	2
Stainless steel bowls	2
5 gallon buckets with lids	20 or more
Duct tape	1 roll
Blue ice and coolers	
Sample containers	
25 gallon plastic tubs (for van Veen decon)	2
150 ft. weighted tape measure	1
Laptop computer and accessories	1
Chair	1
Tool box	1
Camera	1
Film	2 rolls
Mobile phone	1

320308\OMMPAPPB.fr

Table B-3 - Sample Containers, Preservation, and Holding Times for Sediment Samples

Analyte	Surface Sediment					
	Containers			Preservation	Holding Time	
	Type	Size	Quantity		Prep.	Analysis
Total Solids	G	16 oz.	1	Cool, 4°C	N/A	N/A
Total Organic Carbon					N/A	N/A
Metals, except Mercury					N/A	180 days
Mercury					N/A	28 days
Sulfide	P	16 oz.	1	ZnOAc	N/A	7 days
GC/MS ABNs	G/T	16 oz.	1	Cool, 4°C	14 days	40 days
GC/ECD Pesticides/PCBs					14 days	40 days

Analyte	Core Sediment					
	Containers			Preservation	Holding Time	
	Type	Size	Quantity		Prep.	Analysis
Sulfide	P	16 oz.	1	Cool, 4°C	Same as surface sediment	
All other analyses	W/G	1 quart	1	Cool, 4°C		

Notes:

P Polyethylene
G Glass
G/T Glass with Teflon liner
W Widemouth jar
W/T Glass widemouth jar

320308\OMMPAPPB.fr

Table B-4 - Pre-Determined Phase 1 and Phase 2 Sediment Quality Sampling Locations

Sample Identification	Northing	Easting
RD-A1	711270	1524904
RD-A2	711121	1525077
RD-A3	710937	1525255
RD-A4	710776	1525414
RD-A5	711074	1524887
RD-A6	710881	1525049
RD-A7	710625	1525137
RD-A8	710485	1525265
RD-B1	711888	1524319
RD-B2	711742	1524522
RD-B3	711566	1524684
RD-B4	711352	1524774
RD-B5	711810	1524314
RD-B6	711636	1524466
RD-B7	711427	1524579
RD-B8	711192	1524634
RD-C1	712592	1523729
RD-C2	712458	1523895
RD-C3	712216	1524021
RD-C4	712298	1524137
RD-C5	712426	1523435
RD-C6	712355	1523716
RD-C7	712092	1523738
RD-C8	711962	1523980
RD-D1	710872	1524734
RD-D2	711253	1524410
RD-D3	711633	1524086
RD-D4	712555	1524153
RD-D5	712175	1524477
RD-D6	711794	1524802
RD-D7	711414	1525126
RD-D8	711033	1525450
RD-D9	710658	1525658
RD-D10	710308	1525301

Note: These are target locations. Actual field locations will vary.

320308\OMMPAPPB.fr

Table B-5 - Pre-Determined Habitat/Mitigation Sediment Quality Sampling Locations

Sample Identification	Northing	Easting
H-1	712603	1522658
H-2	712390	1522801
H-3	712221	1522907
H-4	712123	1522650
H-5	711831	1522833
H-6	711743	1522899

Note: These are target locations. Actual field locations will vary.

320308\OMMPAPPB.fr

Vicinity Map

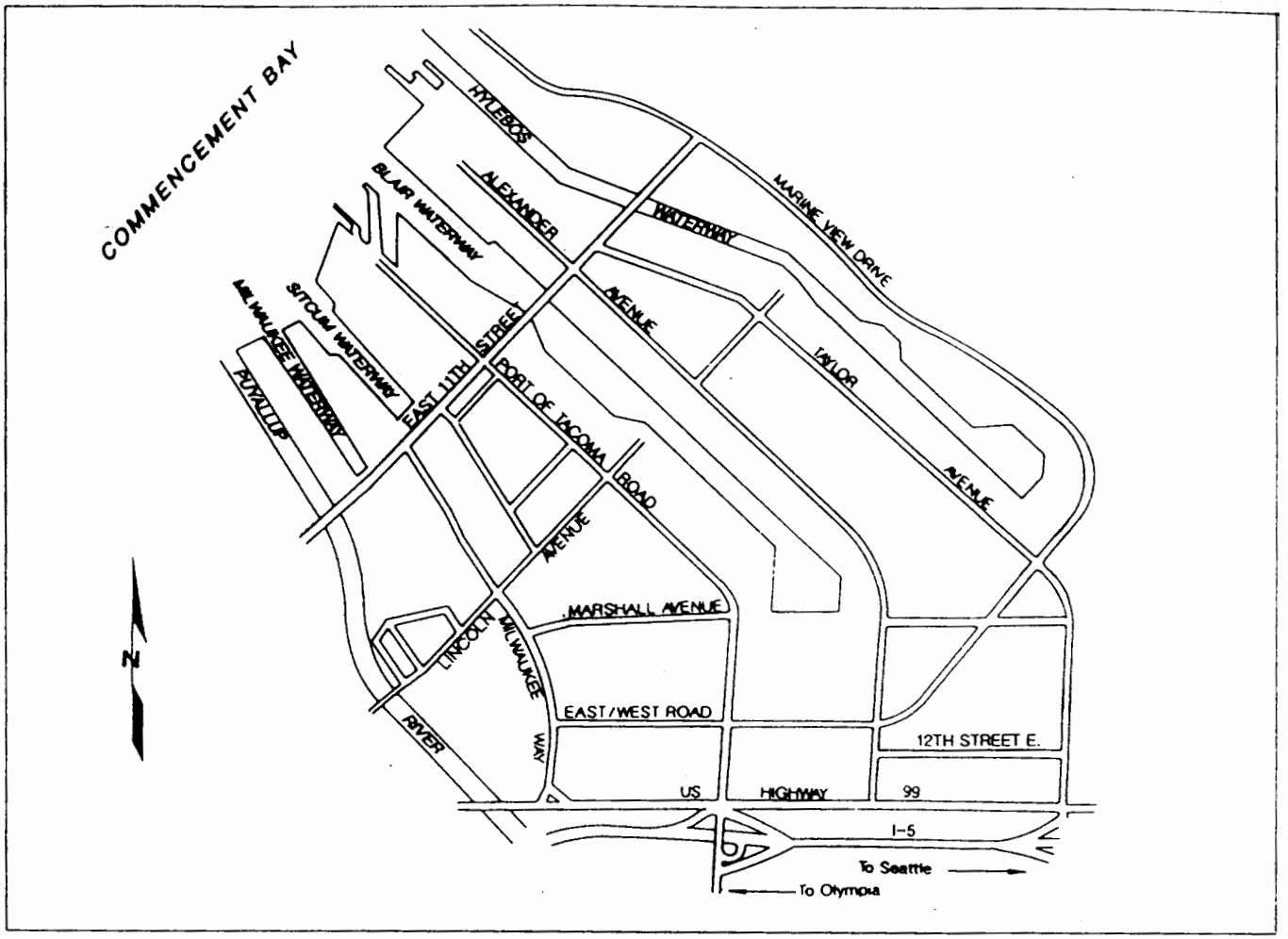

Regional Map

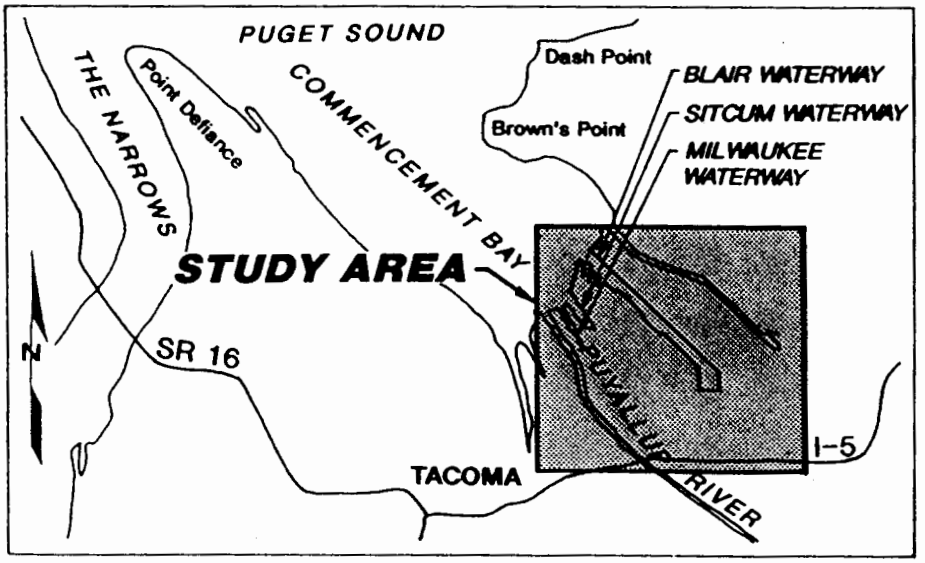

NOT TO SCALE

HARTCROWSER
J-3203-08 12/92
Figure B-1

Proposed Sediment Quality Monitoring Sampling Location Plan

Sitcum Waterway Remediation Project

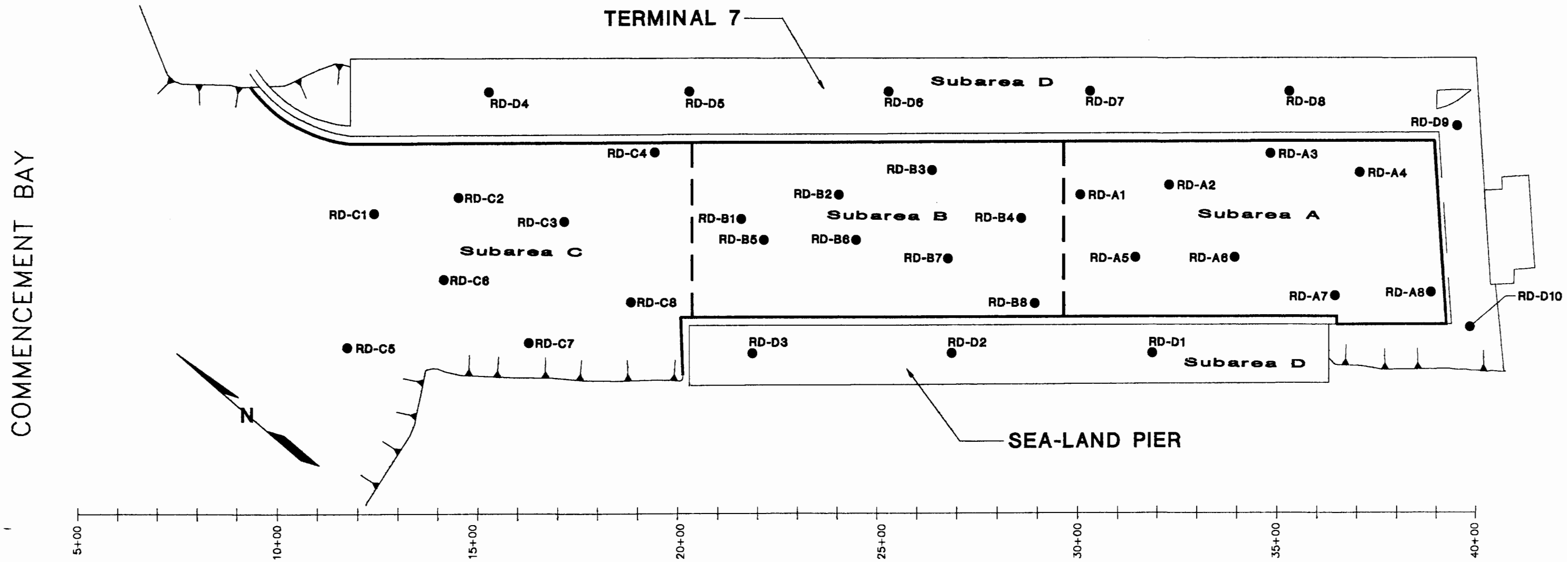

Legend

- ●RD-C4 Sediment Sample Location and Number
- Phase 1 and 2 Boundary
- Pier Face and Bulkhead Line
- Toe of Riprap Slope
- Top of Bank
- Subarea Boundaries

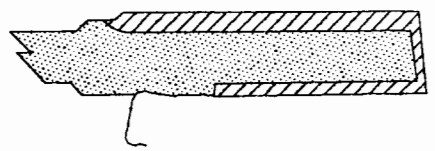

- Phase 1 Sampling Area
- Phase 2 Sampling Area

0 250 500

Scale in Feet

HARTCROWSER

J-3203-08 4/93

Figure B-2

32030800 EJC '94 1=250

Sediment Sampling Form

Project _____

Job No._____

Subcontractor _____

Date _____

HC Reps _____

Conditions _____

Sample Location _____

Sample Method _____

Proposed Coordinates N: _____

E: _____

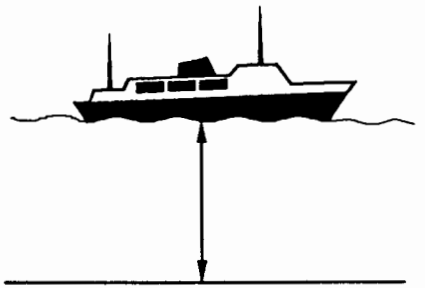

Elevation of Water _____

Tide _____

Elevation of Sediment _____

Run #	Time	Northing	Easting	Comments

van Veen Grab Sampler

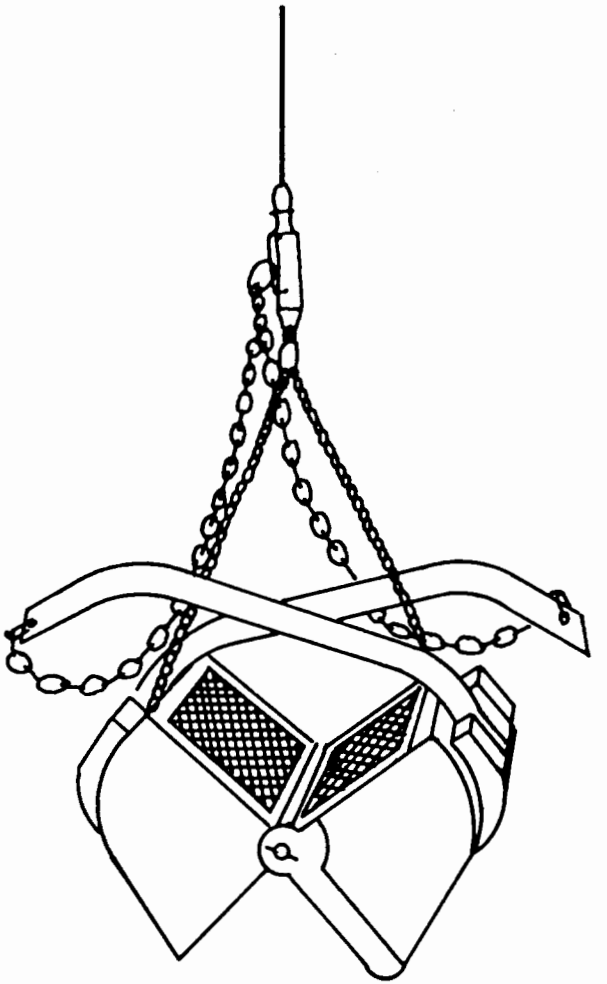

Sample Identification Label

Job Number _____

Sample Number _____

Sampled by _____

Date _____ *Time* _____

_____

_____

e Custody Record Form

Custody Record

DATE _____ PAGE _____ OF _____

HARTCROWSER

Hart Crowser, Inc.
1910 Fairview Avenue East
Seattle, Washington 98102-3699

_____ LAB NUMBER _____

GER _____

IPLE	TIME	STATION	MATRIX	TESTING	NO. OF CONTAINERS	OBSERVATIONS / COMMENTS / COMPOSITING INSTRUCTIONS

HED BY	DATE	RECEIVED BY	DATE
	TIME	SIGNATURE	TIME
		PRINTED NAME	
		COMPANY	

HED BY	DATE	RECEIVED BY	DATE
	TIME	SIGNATURE	TIME
		PRINTED NAME	
		COMPANY	

TOTAL NUMBER OF CONTAINERS

METHOD OF SHIPMENT

SPECIAL SHIPMENT / HANDLING OR STORAGE REQUIREMENTS

DISTRIBUTION:

1. PROVIDE WHITE AND YELLOW COPIES TO LABORATORY
2. RETURN PINK COPY TO PROJECT MANAGER
3. LABORATORY TO FILL IN SAMPLE NUMBER AND SIGN FOR RECEIPT
4. LABORATORY TO RETURN WHITE COPY TO HART CROWSER

cking Form

e Tracking Form

DATE _____ PAGE ____ OF ____

HARTCROWSER

IMBER _____ DATE IN _____	POSSIBLE HAZARDS _____
CT MANAGER _____	_____
CT NAME _____	SAMPLED BY _____
AND CONDITIONS: HAZ. _____ NON-HAZ. _____	REFRIGERATE: YES _____ NO _____

ITY:	BOXES _____	BAGS _____	TUBES _____	LOOSE JARS _____	OTHER _____
ICAL IATIONS:	_____	_____	_____	_____	_____
	_____	_____	_____	_____	_____

DESCRIPTION	LOCATION	DATE OUT	TO WHOM	INITIAL	DATE IN	COMMENTS

ITE: JOB FILE AFTER DISPOS. | YELLOW: LAB W/SAMPLES | PINK: DISPOSITION FILE | GREEN: PROJECT MANAGER

Custody Seal

CUSTODY SEAL *CUSTODY SEAL* *CUSTODY SEAL* *CUSTODY SEAL*

*Date*_____ *Initials*_____

Port of Tacoma
April 6, 1994

ATTACHMENT B-1
QUALITY ASSURANCE PROJECT PLAN
FOR SEDIMENT QUALITY ANALYSIS CHEMISTRY
SITCUM WATERWAY REMEDIATION PROJECT

CONTENTS

	Page
INTRODUCTION	B-1-1
PROJECT ORGANIZATION AND RESPONSIBILITY	B-1-1
QUALITY ASSURANCE OBJECTIVES FOR MEASUREMENT OF DATA IN TERMS OF PRECISION, ACCURACY, COMPLETENESS, REPRESENTATIVENESS, AND COMPARABILITY	B-1-1
Chemical Analyses	B-1-2
Quality Assurance Objectives	B-1-2
SEDIMENT SAMPLING PROCEDURES	B-1-3
SAMPLE CUSTODY	B-1-5
Sample Labeling	B-1-5
Sample Custody	B-1-5
Laucks Laboratory Custody Procedures	B-1-6
CALIBRATION PROCEDURES AND FREQUENCY	B-1-7
Field Calibration	B-1-7
Laboratory Calibration Procedures	B-1-7
SEDIMENT ANALYTICAL PROCEDURES	B-1-7
INTERNAL QUALITY CONTROL CHECKS	B-1-8
Instrument Calibration	B-1-8
DATA REDUCTION, VALIDATION, AND REPORTING	B-1-9
Data Reduction, Validation, and Reporting	B-1-9

CONTENTS (Continued)

	Page
PREVENTATIVE MAINTENANCE	B-1-12
Field Preventative Maintenance	B-1-12
Analytical Laboratory Preventative Maintenance (Laucks)	B-1-13
SPECIFIC ROUTINE PROCEDURES TO BE USED TO ASSESS DATA PRECISION, ACCURACY, AND COMPLETENESS	B-1-13
Precision	B-1-13
Accuracy	B-1-13
Completeness	B-1-14
CORRECTIVE ACTION	B-1-14
QUALITY ASSURANCE REPORTS	B-1-14
DELIVERABLES	B-1-15
DATA MANAGEMENT SYSTEM	B-1-15
Rationale	B-1-15
REFERENCES	B-1-17

TABLES

B-1-1	Personnel Responsible for Quality Assurance Activities	B-1-18
B-1-2	Methods of Analysis and Detection Limits - Sitcum Waterway Sediment	B-1-20
B-1-3	Methods of Analysis and Detection Limit Goals - Habitat/ Mitigation Sediment	B-1-22

ATTACHMENT B-1
QUALITY ASSURANCE PROJECT PLAN
FOR SEDIMENT QUALITY ANALYSIS CHEMISTRY
SITCUM WATERWAY REMEDIATION PROJECT

INTRODUCTION

The purpose of the Quality Assurance Project Plan (QAPP) presented herein is to give, in specific terms, the objectives, organization, and functional activities, associated with the sediment quality monitoring program for the Sitcum Waterway Remediation Project. This QAPP covers the post-construction sampling and analyses of sediment samples for this project.

The EPA (1980) provides a specific set of guidelines to aid in preparing a QAPP. This document is consistent with and meets the intent of these guidelines. In addition a number of other EPA documents were used as aids in preparing this document (EPA, 1987, 1988a, 1988b, and 1989).

Field activities will be performed by Hart Crowser personnel for sediment-related activities. Collection of sediment samples will be performed by contractors under the direct supervision of Hart Crowser personnel.

Chemical analyses of sediments will be performed by Laucks Testing Laboratories (Laucks) of Seattle, Washington. Laucks was chosen based on past accomplishments with Hart Crowser and their recent work on the Sitcum Waterway pre-remedial design sediment chemistry characterization.

PROJECT ORGANIZATION AND RESPONSIBILITY

Quality assurance responsibilities of project personnel are summarized in Table B-1-1.

QUALITY ASSURANCE OBJECTIVES FOR MEASUREMENT OF DATA IN TERMS OF PRECISION, ACCURACY, COMPLETENESS, REPRESENTATIVENESS, AND COMPARABILITY

The quality of the laboratory data is assessed by precision, accuracy, representativeness, comparability, and completeness (the "PARCC" parameters). Definitions of these parameters and the applicable quality control procedures are given below.

Chemical Analyses

The applicable quality control procedures and quantitation limits are dictated by the specific analytical methods employed and the intended use of the data. For this project, the chemical data will be used to assess the effectiveness of sediment removal as part of the Sitcum Waterway Remediation Project and will be usable for subsequent analyses as may be determined by EPA and the Port.

Chemical analysis for the parameters on Tables B-1-2 and B-1-3 will be performed on the sediment samples from the Phase 1 and Phase 2 areas and the habitat/mitigation area, respectively (see Section 4.0, OMMP). These tables present a compilation of analytes of concern with their associated method of analysis, Contract Required Detection or Quantitation Limits (CRDLs or CRQLs), as appropriate for sediment samples.

Quality Assurance Objectives

Precision. Precision measures the reproducibility of measurements under a given set of conditions. Specifically, it is a quantitative measure of the variability of a group of measurements compared to their average values. Analytical precision is measured through matrix spike/matrix spike duplicate (MS/MSD) samples for organics analyses, MS/duplicate for metals, and through duplicate samples for other inorganic analyses. Analytical precision is quantitatively expressed as the relative percent difference (RPD) between the MS/MSD or duplicates. Analytical precision measurements will be carried out at a minimum frequency of one per case or one in 20 samples per matrix analyzed.

Accuracy. Accuracy is a measure of the closeness of the measured value to the true value. The accuracy of chemical test results is assessed by analyzing standard reference materials or by "spiking" samples with known standards (surrogates and/or matrix spike) and measuring the percent recovery.

Fraction	Sediment	Frequency	Water	Frequency
MS B/Ns	ERA PPS-45*	2 overall	EPA PP-41	1 overall
MS Acids	ERA PPS-45	2 overall	EPA PP-41	1 overall
ICP Metals	EPA PPS-46	1 per batch	SPEX ICV-1	1 overall
GF Metals	EPA LCSS 0287	1 per batch	EPA ICV-2/ICV-4	1 overall
Mercury	EPA LCSS 0287	1 per batch	None Available	--
Total Organic Carbon	NIST-2704	2 overall	EPA WP series	1 overall
Sulfide	--	--	EPA WP series	1 overall

* Or may substitute NIST 1941

The availability of SRMs is always subject to change and specific catalog numbers may vary.

In the event that low recoveries of SRM ABN analytes are encountered, blank spikes may be concurrently analyzed with the SRM. Acceptable blank spike recoveries would take precedence over low SRM ABN analyte recoveries.

Completeness. Completeness is defined as the percentage of measurements made which are judged to be valid measurements. Results will be considered valid if all the precision, accuracy, and representative objectives are met. A target completeness goal for this work will be 90 percent.

Representativeness. Representativeness is a measure of how closely the measured results reflect the actual concentration or distribution of the chemical compounds in the matrix sampled. The sampling plan design, sampling techniques, and sample handling protocols (e.g., storage, preservation, and transportation) have been developed to assure representative samples; these procedures are discussed in Section 4.0, of the OMMP. Field replicates obtained at a minimum 10 percent frequency will be used to assess field and method variation. Laboratory method blanks will be run at a minimum of 5 percent frequency to assess laboratory contamination.

Comparability. Comparability is a qualitative parameter expressing the confidence with which one data set can be compared with another. The use of standard techniques for both sample collection and laboratory analysis should make data collected comparable to both internal and other data generated. Comparability with previously generated data will be

representative samples to fulfill these data needs. Section 4.2 and Table 4-3 presents a summary of number of samples to be collected and locations.

The information provided within the QAPP outlines the data documentation procedures which will be followed to assure quality data. The documentation procedures include specific data forms presented below. Individual forms will be used for recording specific field observations. These forms include the following:

Sediment Sampling Form	(Figure B-4)
Sample Custody Record	(Figure B-7)

General field observations will be recorded in a field notebook. Daily field reports will be completed based on the day's field notes.

To control the quality of samples submitted for laboratory analysis, established preservation and storage measures will be followed. Table B-3 provides information on holding times, sample containers, and sample preservation requirements for sediment samples. All sediment sample containers will be obtained directly from Laucks. Laucks will purchase precleaned and certified free of contamination sample containers from Environmental Sampling Supply of Oakland, California, and Baxter Scientific.

The containers are precleaned by the supplier(s) to one of two specifications, depending on the analytical purpose, as described below:

- **Procedure 1.** For extractable organics (acid/base/neutral compounds). The 16 ounce clear glass jars (for sediments), teflon liners, and caps are washed in hot tap water using laboratory grade non-phosphate detergent. All are then rinsed three times with hot tap water. All are then rinsed once with 1:1 nitric acid (metals-grade HNO_3 and ASTM deionized water) and then rinsed three times with ASTM Type I deionized water. A final rinse is made using pesticide grade methylene chloride. The bottles, jars, and teflon liners are oven-dried at 125°C, then allowed to cool to room temperature in an enclosed, contaminant-free environment before assembling.

All containers will be labeled by the supplier with the cleaning procedure employed and lot number. Holding time requirements are presented in Table B-3.

SAMPLE CUSTODY

This section provides guidance on labeling and custody of samples.

Sample Labeling

Sample labels will clearly indicate sampling locations and sample number. Depth interval, date, sampler's initials, and any pertinent comments will also be included. Labels will be filled out at the time of sampling. A typical sample label is presented on Figure B-6.

Sample Custody

Definition of Custody. After recovery, samples will be maintained in Hart Crowser's custody until formally transferred to another party. For purposes of this work, custody will be defined as follows:

- In plain view of the field representatives;
- Inside a cooler which is in plain view of the field representative; or
- Inside any locked space such as a cooler, locker, car, or truck to which the field representative has the only immediately available key(s).

Custody Records. A chain of custody record will be initiated at the time of sampling for each sample collected. This record will be signed by the sampler and others who subsequently hold custody of the sample. A typical custody form is presented on Figure B-7.

Sediment samples will be transported to Hart Crowser's soils laboratory where soil classification, sample packaging for chemical testing. All the samples will be logged in on the Hart Crowser internal sample tracking form (Figure B-8). The soils laboratory manager will keep all samples under his custody while tests are performed.

Custody Seal. Samples selected for chemical analyses along with their

Laucks Laboratory Custody Procedures

The samples will be logged into an electronic Laboratory Information Management System (LIMS) based on date of receipt and matrix. Each work order generated by the system bears a discrete, sequential number and, within the work order, each sample bears a unique identifier, the "dash" (or sample) number. Both the 7-digit work order number and the unique dash number are written on each sample bottle label in indelible ink. Client sample identification is cross referenced electronically in the LIMS system; the number and types of bottles submitted for each sample are also recorded. The client sample identification and corresponding laboratory identification are used to generate a Sample Delivery Group (SDG) sheet, which is distributed to the laboratory. (A sample delivery group is a CLP convention that associates samples in groups of 20 or fewer, based on date of receipt.)

The electronically generated sample information is cross checked by a second party prior to computerized transmittal of the LIMS information to the laboratory and distribution of the hard copy SDG sheet to analytical group supervisors. A hard copy record of the computerized sample information is made and filed alphabetically by client name. Along with this hard copy record are filed all accompanying documents (such as chain of custody forms) and a copy of the SDG sheet. This hard copy record now comprises the case master file.

Secure Sample Storage. Following log in, samples are removed to secure storage areas appropriate to the sample type. Volatile organics aliquots are stored at 4°C, under lock and key, in a refrigerator reserved for the purpose. They are stored separately from other sample types and from standards. Analysts must sign samples in and out of storage.

Aliquots for extractable organics (semivolatiles and pesticides/PCBs) are removed to secure, refrigerated storage in the extractions laboratory located at 921 South Harney Street. The transfer from 940 South Harney (where samples are received and logged) to 921 South Harney is done under internal chain of custody. All entrances to this building are kept locked at all times.

Aliquots for inorganic determinations are stored at 4°C in the main

work order number. Documents are retained in hard copy for 10 years; after the second year, storage is off site at Shurgard Records Management in Seattle, Washington.

CALIBRATION PROCEDURES AND FREQUENCY

Field Calibration

Calibration for positioning equipment will be performed according to manufacturer's specifications.

Laboratory Calibration Procedures

The laboratory calibration procedures are specified in the EPA CLP SOWs for each parameter (EPA, 1990a and 1990b) or the methods for non-CLP analyses.

SEDIMENT ANALYTICAL PROCEDURES

Table B-1-2 presents the target list of compounds to be analyzed in sediment samples.

All organic and metal analyses for sediments will be performed in accordance to protocols specified on the 1990 Statement of Work (SOW) for the Environmental Protection Agency Contract Laboratory Program (EPA CLP). In some cases, detection limits lower than those in the SOW CLP protocols are required for particular analytes to provide sufficient data resolution for purposes of comparison with sediment cleanup objectives. In such cases where lower detection limits are desired, modifications to CLP SOW 1990 will be made.

Modifications to protocols for the analysis of organic substances specified in the CLP SOW 1990 are:

- GC/MS Semivolatile organic compound identifications will be made and concentrations will be reported down to the method detection limit as long as spectral confirmation can be made, this means there will be

- Arsenic determination will be performed according to method 7061 of the SW 846 methods of analyses. Sediment digest will be diluted to a final volume of 100 ml instead of 200 ml.

- Samples for lead analysis will be analyzed by graphite furnace. Sediment digest will be diluted to a final volume of 100 ml instead of 200 ml.

Conventional analysis will be performed according to one of the following references: Methods for the Chemical Analyses of Water and Waste; Standard Methods, 18th edition, Puget Sound Estuary Program, or SW 846, as presented on Tables B-1-2 and B-1-3, since no CLP protocols have been established for these parameters.

All results for sediment sample analysis will be presented on dry weight basis.

INTERNAL QUALITY CONTROL CHECKS

The laboratory quality control procedures will consist of the following:

Instrument Calibration

Sediment. Instrument calibration and standards as defined in the EPA CLP SOWs for organic and inorganic analyses (EPA, 1990a and 1990b, respectively), except where non-CLP procedures are used.

- **Blanks**

Method Blank. Laboratory method blank measurements at a minimum 5 percent or one-per-20 frequency;

Trip Blanks. Trip blanks for water and soils are typically analyzed for volatile organics to detect contamination associated with sample handling. Since volatile organics are not being analyzed, trip blanks will not be necessary.

Accuracy and precision measurements will be performed at a minimum 5 percent or one-per-20 frequency; and

- **Reports**

  Data reports including CLP documentation for each analysis, as described in the EPA SOWs for organic and inorganic analysis (EPA, 1990a and 1990b, respectively), or according to the laboratory QA/QC procedures described in previous sections when modifications to CLP procedures are used.

  For non-CLP procedures, data reports should include necessary information to allow reviewer to perform a QA/QC review equivalent to CLP review.

DATA REDUCTION, VALIDATION, AND REPORTING

All data will undergo two levels of quality assurance/quality control evaluation: one at the laboratory and one at Hart Crowser.

Initial data reduction, evaluation, and reporting at the laboratory will be carried out as described in the EPA CLP SOWs for organic and inorganic analysis (EPA, 1990a and 1990b, respectively) or based on the analytical laboratory in-house protocols when CLP procedures are not used or not defined.

Data Reduction, Validation, and Reporting

Sediment - Laucks Laboratory Data Validation. All analysts are required to complete a QC Non-Conformance Memo when analysis concludes. The purpose of the memo is to document either (1) that all quality control parameters were in control; or (2) that corrective action has been taken if quality control indicators fall outside of control limits. An in-control analysis requires no further action. A memo noting out-of-control circumstances must be reviewed and initialed by the Quality Control Officer (QCO). The QCO may concur with the corrective actions

(inorganic analyses only). The supervisor or DCG reviewer accepts the data, initialing it, or rejects the data based on criteria such as surrogate and MS/MSD recovery values, data package completeness, calibration, and correctly calculated sample results. If rejected, the data are returned to the analyst via the QCO and reanalysis may be performed.

After the analyst, analytical department supervisor or DCG reviewer, and QCO (if out of control events occurred) have accepted the data, the final report is prepared.

Laboratory data flags, or qualifiers, are applied following EPA CLP protocols for organic and inorganic analyses. These data flags may have different meanings than those commonly employed by non-laboratory data reviewers. The flags will be defined in the accompanying case narrative.

Hart Crowser Data Validation. The CLP organics data will be evaluated in accordance with EPA's Laboratory Data Validation Functional Guidelines for Evaluating Organics Analysis (EPA, 1988a). CLP inorganics data will be validated in accordance with EPA's Laboratory Data Validation Functional Guidelines for Evaluating Inorganics Analysis (EPA, 1988b). Chemical data from non-CLP procedures will be reviewed with regard to the following, as appropriate to the particular analysis.

- Holding times;
- Instrument calibration;
- Blanks;
- Detection limits;
- Surrogate recoveries;
- Duplicates and MS/MSDs;
- Precision and accuracy;
- Completeness; and
- Data report formats.

Detection Limits and Quantitation Limits

In general, detection limits will reflect the lowest levels of analyte that can be accurately and reproducibly detected by the analytical method

SQL = The lowest reproducible concentration at which a chemical can be accurately and reproducibly quantitated for a given sample. The SQL can vary from sample to sample depending on sample size, matrix interferences, moisture content, and other sample-specific conditions.

CRQL = The concentration at which the laboratory must be able to routinely detect and quantitate the target compound in a variety of sample matrices. CRQLs established by the EPA in the SOW for organics analysis (EPA, 1990a) will be used for this work unless modifications to CLP procedures are used.

SQLs may be adjusted for a specific sample as a result of adjustments to the preparation or analytical method (i.e., sample dilution, sample matrix or variations in sample mass or volume extracted). CRQLs are not adjusted. Because SQLs take into account sample characteristics (i.e., matrix effects), sample preparation, and analytical adjustments, these values are the most relevant quantitation limit for evaluating non-detected chemicals.

Data for each target analyte generated in accordance with the EPA SOWs for inorganics (EPA, 1990b) will be reported with a sample quantitation limit (SQL) and a contract required detection limit (CRDL). CRDL is defined as follows:

CRDL = The concentration at which the laboratory must be able to routinely detect and quantitate the target analyte in a variety of sample matrices. CRDLs established by the EPA in the SOW for inorganics analysis (EPA, 1990b) will be used for this work except for analysis where CLP procedures will not be used.

Data Qualifiers

CLP data will be qualified by the laboratory in accordance with CLP laboratory data qualifier definitions for inorganic and organic chemical data (EPA, 1989a, 1990a, and 1990b). Additional laboratory data qualifiers may be defined and reported in order to more completely explain the laboratory's quality control concerns regarding a particular sample result.

data qualifiers to more fully explain data quality concerns associated with a particular sample result. All additional qualifier definitions will be provided in Hart Crowser's data validation reports for each case.

All other non-CLP data will be evaluated by the laboratory in accordance with standard EPA or laboratory procedures as appropriate. These data will be evaluated against control limits established through routine laboratory performance of the methods as presented in Table B-1-2, as appropriate.

PERFORMANCE AND SYSTEM AUDITS

Hart Crowser's project quality assurance manager will monitor the performance of the field and laboratory quality assurance program. This will be achieved through regular contact with the field and analytical QA officers.

Field Performance

Field performance will be monitored through review of sample collection documentation, sample handling records (chain of custody forms), field notebooks, and field measurements.

Laboratory Performance and System Audits

Prior to beginning laboratory analyses, a system audit of the laboratories will be performed. Continuing performance audits are conducted on a regular basis to assure data of known quality are being provided by the laboratory. The laboratory shall maintain records to support an audit of the technical quality of all analyses.

Hart Crowser will be in contact with the analytical laboratory on a weekly basis while sediment samples collected during this investigation are being analyzed. This will allow Hart Crowser to assess progress toward obtaining our data quality objectives and to initiate corrective measures as concerns arise.

Analytical Laboratory Preventative Maintenance (Laucks)

Preventative maintenance in the laboratory will be the responsibility of the laboratory personnel and analysts. This maintenance includes routine care and cleaning of instruments and inspection and monitoring of carrier gases, solvents, and glassware used in analyses.

Precision and accuracy data are examined for trends and excursions beyond control limits to determine evidence of instrument malfunction. Maintenance will be performed when an instrument begins to change as indicated by the degradation of peak resolution, shift in calibration curves, decrease in sensitivity, or failure to meet one or another of the quality control criteria. Details of the maintenance procedures for Laucks are addressed in the Laucks Testing Laboratories Quality Control Manual presented as Attachment A-5.

SPECIFIC ROUTINE PROCEDURES TO BE USED TO ASSESS DATA PRECISION, ACCURACY, AND COMPLETENESS

Data assessment will be based on the data quality objectives. This will include data validation procedures described in this attachment. The quantitative definitions of precision, accuracy, and completeness are presented in this section.

Precision

The results from matrix spikes and matrix spike duplicate analyses will be used to determine the relative percent difference (RPD) between the pair of analyses. This is a measure of analytical precision and can be calculated as follows:

$$RPD = \frac{(C_1 - C_2)}{(C_1 + C_2)/2} \times 100$$

Where:

$$\%R = 100 \times (S-U) / C_{sa}$$

Where:
%R = percent recovery
S = measured concentration in spiked aliquot
U = measured concentration in unspiked aliquot
C_{sa} = actual concentration of spike added

Completeness

Measurement of completeness (C) can be defined as the ratio of acceptable measurements obtained to the total number of planned measurements for an activity. Completeness can be defined as:

$$\%C = \frac{\text{(No. of data within target quality control limits)}}{\text{(Total No. of data points)}} \times 100$$

CORRECTIVE ACTION

If quality control audits result in detection of unacceptable conditions or data, the project manager in conjunction with the project quality assurance coordinator, will be responsible for implementing corrective action. Specific corrective actions are outlined in each respective EPA CLP SOW or method and include but are not limited to the following:

- Identifying the source of the violation;
- Re-analyzing samples if holding time criteria permit;
- Resampling and analyzing;
- Evaluating and amending sampling and analytical procedures; and/or
- Accepting data and flagging to indicate the level of uncertainty.

QUALITY ASSURANCE REPORTS

After data have been received and evaluated by Hart Crowser, a report summarizing the specific QC checks will be written. This summary will

This report will be submitted to the project QA Coordinator for final confirmation of the validity of the data. These reports will be included in the Data Report.

DELIVERABLES

Laucks Testing Laboratories will provide the deliverables required for all analyses to enable independent QA/QC review of the data package as specified in their contract with EPA for the Contract Laboratory Program. Laucks will also provide Hart Crowser with a computer diskette with the data in a format specified by Hart Crowser.

DATA MANAGEMENT SYSTEM

Rationale

The computerized data management system created by Hart Crowser has the following capabilities:

- Generate rapid reports of chemical and physical information;
- Compare test results with established environmental criteria and identify which samples exceed what criteria and at what concentrations;
- Accommodate additional test data or additional criteria; and
- Provide a data exchange mechanism between Hart Crowser's database and other database and geographic information systems.

The Hart Crowser data management system entails the chemistry data and is maintained in Paradox, a relational database, in conjunction with Quattro Pro.

Each record contains sample description information and corresponding chemical and physical data. These chemistry records are arranged in the

The electronic data submittals to EPA will be formatted based on the June 2, 1993, EPA document entitled "Instructions for Formatting of Digital Data, Sediment (Chemical, Benthic, Bioassay), Water Column, and Shellfish Monitoring Data, Commencement Bay Nearshore/Tideflats Superfund Site."

REFERENCES

EPA, 1990a. Contract Laboratory Program Statement of Work for Organic Analyses, Multimedia, Multiconcentrations, TIM01.0.

EPA, 1990b (Revised March 1990). Contract Laboratory Program Statement of Work for Inorganic Analyses, Multimedia, Multiconcentration, TIM01.0.

EPA, 1989. Preparation Aids for the Development of RREL Quality Assurance Project Plans (Pocket Guide). Risk Reduction Engineering Laboratory, Cincinnati, Ohio. EPA/600/989087, October, 1989.

EPA, 1988a. Laboratory Data Validation Functional Guidelines for Evaluating Organic Analyses. Prepared for the Hazardous Site Evaluation Division, USEPA, February 1, 1988.

EPA, 1988b. Laboratory Data Validation Functional Guidelines for Evaluating Inorganic Analysis. Prepared for the Hazardous Site Evaluation Division, USEPA. July 1, 1988.

EPA, 1987. Data Quality Objectives for Remedial Response Activities. Development Processes. EPA/540/a-7/003.

EPA, 1986. Test Methods for Evaluating Solid Waste. SW-846, 3rd Edition, November 1986.

EPA, 1983. Standard Methods for Chemical Analysis of Water and Wastes.

EPA, 1980. Interim Guidelines and Specifications for Preparing Quality Assurance Project Plans, QAMS-005/80. December 29, 1980. Office of Monitoring Systems and Quality Assurance, Office of Research and Development.

Standard Methods for the Examination of Water and Wastewater, 16th

Table B-1-1 - Personnel Responsible for Quality Assurance Activities

Personnel	Responsibilities
EPA Project Manager	Oversee project performance to ensure compliance with Consent Decree. Act as liaison between Port and the agencies.
EPA QA Coordinator	Provide technical QA assistance. Coordinate corrective actions. Prepare and submit QA project reports to Hart Crowser Project QA Coordinator.
Port of Tacoma Project Manager	Oversee project team performance to ensure contract compliance. Coordinate Hart Crowser activities to implement required work.
Hart Crowser, Inc. Project Manager	Oversee project team performance to ensure contract compliance. Implement necessary action and adjustments to accomplish program objectives. Monitor field investigations. Coordinate field and laboratory sample tracking. Coordinate Hart Crowser personnel to implement required work.
Hart Crowser, Inc. Project QA Coordinator	Provide technical QA assistance. Arrange contract or other external procurement packages for QA needs. Coordinate corrective actions. Oversee all contractor QA activities to ensure compliance with contract specifications. Direct implementation of QA contractor plan. Prepare and submit QA project reports to management.
Hart Crowser, Inc. Analytical QA Officer	Ensure data quality, data validation, and QA information are complete and are reported in the required deliveries format as required from the analytical laboratory. Write quality assurance reports and inform project QA coordinator when problem occurs.
Hart Crowser, Inc. Project Field QA	Ensure that sample collection, preservation, storage, transport, and chain of custody quality control procedures are

Table B-1-1 - Personnel Responsible for Quality Assurance Activities Sheet 2 of 2

Personnel	Responsibilities
Hart Crowser, Inc. Soils Laboratory QA Officer	Ensure that physical testing procedures are performed as required; leaching test quality control and documentation performed as specified; proper storage, transport, and chain of custody quality control procedures are followed. Inform project QA coordinator when problems occur, and communicate and document corrective actions taken.
Hart Crowser, Inc. Soils Laboratory QA Technician	Ensure that instruments are calibrated and maintained as specified; internal quality control measures and methods are performed as required; corrective action is taken and Soils Lab QA Officer is notified when problems occur.
Laucks Testing Labs Analytical Laboratory Project Manager	Oversee laboratory analytical performance to ensure contract compliance. Implement necessary action and adjustments to accomplish analytical project objectives.
Laucks Testing Labs Laboratory QA Officer	Ensure the use of proper analytical procedures as specified in laboratory contract; ensure all quality control indicators are within control limits specified; initiate corrective action.
	Oversee laboratory analytical performance to ensure contract compliance. Implement necessary action and adjustments to accomplish analytical project objectives.
	Ensure the use of proper analytical procedures as specified in laboratory contract; ensure all quality control indicators are within control limits specified; initiate corrective action.

Table B-1-2 - Methods of Analysis and Detection Limits - Sitcum Waterway Sediment

Analyte	CLP CRQL	Laucks MDL(7)	Test Methods Sediments		
			Reference	Method	
CONVENTIONALS & MISC.					
Total Solids	NA	1 %	SM	2540 G	
Total Organic Carbon	NA	0.1 %	PSEP	Modified	
METALS in mg/kg (ppm)					
Antimony	12	1	PSEP	Page 18, Metals	(1)
Arsenic	2	1	SW 846	7061	(1)
Mercury	0.1	0.1	CLP	SOW 3/90	
Silver	2	1	CLP	SOW 3/90	(1)
Copper	5	2.5	CLP	SOW 3/90	(1)
Nickel	8	4	CLP	SOW 3/90	(1)
Cadmium	1	1	CLP	SOW 3/90	(1)
Lead	0.6	0.6	CLP	SOW 3/90	(1)
Zinc	4	2	CLP	SOW 3/90	(1)
LPAHs in µg/kg (ppb)					
Naphthalene	330	33	CLP	SOW 3/90	(2)
2-Methylnaphthalene	330	33	CLP	SOW 3/90	(2)
Acenaphthylene	330	33	CLP	SOW 3/90	(2)
Acenaphthene	330	33	CLP	SOW 3/90	(2)
Fluorene	330	33	CLP	SOW 3/90	(2)
Phenanthrene	330	33	CLP	SOW 3/90	(2)
Anthracene	330	33	CLP	SOW 3/90	(2)
HPAHs in µg/kg (ppb)					
Fluoranthene	330	33	CLP	SOW 3/90	(2)
Pyrene	330	33	CLP	SOW 3/90	(2)
Benzo(a)anthracene	330	33	CLP	SOW 3/90	(2)
Chrysene	330	33	CLP	SOW 3/90	(2)
Benzo(b)fluoranthene	330	33	CLP	SOW 3/90	(2)
Benzo(k)fluoranthene	330	33	CLP	SOW 3/90	(2)
Benzo(a)pyrene	330	33	CLP	SOW 3/90	(2)

Table B-1-2 - Methods of Analysis and Detection Limits - Sitcum Waterway Sediment

Analyte	CLP CRQL	Laucks MDL(7)	Test Methods Sediments Reference	Method	
MISC. OXY. COMPOUNDS in µg/kg (ppb)					
Dibenzofuran	330	33	CLP	SOW 3/90	(2)
PESTICIDES/PCBs in µg/kg (ppb)					
Total PCBs	NA	20			(5,6)

Notes:

(1) CLP digestion is 1gm/200 ml. Our digestion would be 1 gm/100 ml.
(2) Values are reported as long as spectral confirmation can be made. This means that there will be no laboratory J-flagged values; however, J flags may be assigned during data validation. The J qualifier in CLP data means the analyte was detected above the lab MDL but below the CRQL.
(3) Determined in the ABNs analysis for Sitcum samples.
(4) Determined in the pesticide fraction.
(5) Total values are calculated by summing concentrations above detection limits. Concentrations not detected at the detection limit value will not be included.
(6) Modified as necessary for the limited target analyte list and including any or all of the following cleanups: florisil cleanup; SW 846 Method 3620; sulfite sulfur cleanup; or elemental mercury clenaup for sulfur.
(7) Dry weight basis.

SM	Standard Methods, 18th Edition
CLP	Contract Laboratory Program
MCAWW	Methods for the Chemical Analysis of Water and Waste
CRQL	Contract Required Quantitation Limit
Laucks	Laucks Testing Laboratories, Inc.
MDL	Method Detection Limit
PSEP	Puget Sound Estuary Program

Actual Sample Detection Limits may vary from Method Detection Limits depending on the influences of limited sample volume, matrix interferences, blank contamination, and moisture content of sediments.

Table B-1-3 - Methods of Analysis and Detection Limit Goals - Habitat/Mitigation Sediment

Analyte	CLP CRQL	Laucks MDL(7)	Test Methods Sediments		
			Reference	Method	
CONVENTIONALS & MISC.					
Total Solids	NA	1 %	SM	2540 G	
Total Vol Solids	NA	1 %	SM	2540 E	
Total Organic Carbon	NA	0.1 %	SW 846	9060 with I.R.	
Ammonia (on DIW leachate)	NA	50 ppm	MCAWW	350	
Cyanide	2	1 ppm	CLP	SOW 3/90	
pH	NA	NA	SW 846	9045	
Sulfide	NA		PSEP	NA	
METALS in mg/kg (ppm)					
Antimony	12	1	PSEP	Page 18, Metals	(1)
Arsenic	2	1	SW 846	7061	(1)
Mercury	0.1	0.1	CLP	SOW 3/90	
Silver	2	1	CLP	SOW 3/90	(1)
Copper	5	2.5	CLP	SOW 3/90	(1)
Nickel	8	4	CLP	SOW 3/90	(1)
Cadmium	1	1	CLP	SOW 3/90	(1)
Lead	0.6	0.6	CLP	SOW 3/90	(1)
Zinc	4	2	CLP	SOW 3/90	(1)
PHENOLS & SUB PHENOLS in µg/kg (ppb)					
Phenol	330	33	CLP	SOW 3/90	(2)
2-Methylphenol	330	33	CLP	SOW 3/90	(2)
4-Methylphenol	330	33	CLP	SOW 3/90	(2)
2,4-Dimethylphenol	330	33	CLP	SOW 3/90	(2)
Pentachlorophenol	800	330	CLP	SOW 3/90	(2)
LPAHs in µg/kg (ppb)					
Naphthalene	330	33	CLP	SOW 3/90	(2)
2-Methylnaphthalene	330	33	CLP	SOW 3/90	(2)
Acenaphthylene	330	33	CLP	SOW 3/90	(2)
Acenaphthene	330	33	CLP	SOW 3/90	(2)

Table B-1-3 - Methods of Analysis and Detection Limit Goals - Habitat/Mitigation Sediment

Analyte	CLP CRQL	Laucks MDL(7)	Test Methods Sediments		
			Reference	Method	
HPAHs in µg/kg (ppb)					
Fluoranthene	330	33	CLP	SOW 3/90	(2)
Pyrene	330	33	CLP	SOW 3/90	(2)
Benzo(a)anthracene	330	33	CLP	SOW 3/90	(2)
Chrysene	330	33	CLP	SOW 3/90	(2)
Benzo(b)fluoranthene	330	33	CLP	SOW 3/90	(2)
Benzo(k)fluoranthene	330	33	CLP	SOW 3/90	(2)
Benzo(a)pyrene	330	33	CLP	SOW 3/90	(2)
Indeno(1,2,3-cd)pyrene	330	33	CLP	SOW 3/90	(2)
Dibenzo(a,h)anthracene	330	33	CLP	SOW 3/90	(2)
Benzo(g,h,i)perylene	330	33	CLP	SOW 3/90	(2)
CHLOR. AROMATICS in µg/kg (ppb)					
1,3-Dichlorobenzene	330	33	CLP	SOW 3/90	(2,3)
1,4-Dichlorobenzene	330	33	CLP	SOW 3/90	(2,3)
1,2-Dichlorobenzene	330	33	CLP	SOW 3/90	(2,3)
1,2,4-Trichlorobenzene	330	33	CLP	SOW 3/90	(2,3)
Hexachlorobenzene	330	0.33	CLP	SOW 3/90	(4,6)
CHLOR. ALIPHATICS in µg/kg (ppb)					
Hexachlorobutadiene	330	0.33	CLP	SOW 3/90	(4,6)
PHTHALATE ESTERS in µg/kg (ppb)					
Dimethyl phthalate	330	33	CLP	SOW 3/90	(2)
Diethyl phthalate	330	33	CLP	SOW 3/90	(2)
Di-n-butyl phthalate	330	33	CLP	SOW 3/90	(2)
Butylbenzylphthalate	330	33	CLP	SOW 3/90	(2)
Bis(2-ethylhexyl)phthalate	330	33	CLP	SOW 3/90	(2)
Di-n-octyl phthalate	330	33	CLP	SOW 3/90	(2)
MISC. OXY. COMPOUNDS in µg/kg (ppb)					
Benzyl alcohol	NA	33	CLP	SOW 3/90	(2)

Table B-1-3 - Methods of Analysis and Detection Limit Goals - Habitat/Mitigation Sediment

Analyte	CLP CRQL	Laucks MDL(7)	Test Methods Sediments		
			Reference	Method	
PESTICIDES/PCBs in µg/kg (ppb)					
Total PCBs	NA	20			(5,6)
4,4'-DDE	3.3	3.3	CLP	SOW 3/90	(6)
4,4'-DDD	3.3	3.3	CLP	SOW 3/90	(6)
4,4'-DDT	3.3	3.3	CLP	SOW 3/90	(6)

Notes:

(1) CLP digestion is 1gm/200 ml. Our digestion would be 1 gm/100 ml.
(2) Values are reported as long as spectral confirmation can be made. This means that there will be no laboratory J-flagged values; however, J flags may be assigned during data validation. The J qualifier in CLP data means the analyte was detected above the lab MDL but below the CRQL.
(3) Determined in the ABNs analysis for Sitcum samples.
(4) Determined in the pesticide fraction.
(5) Total values are calculated by summing concentrations above detection limits. Concentrations not detected at the detection limit value will not be included.
(6) Modified as necessary for the limited target analyte list and including any or all of the following cleanups: florisil cleanup; SW 846 Method 3620; sulfite sulfur cleanup; or elemental mercury clenaup for sulfur.
(7) Dry weight basis.

SM	Standard Methods, 18th Edition
CLP	Contract Laboratory Program
MCAWW	Methods for the Chemical Analysis of Water and Waste
CRQL	Contract Required Quantitation Limit
Laucks	Laucks Testing Laboratories, Inc.
MDL	Method Detection Limit
PSEP	Puget Sound Estuary Program

Actual Sample Detection Limits may vary from Method Detection Limits depending on the influences of limited sample volume, matrix interferences, blank contamination, and moisture content of sediments.

Port of Tacoma
April 6, 1994

ATTACHMENT B-2
HEALTH AND SAFETY PLAN FOR SEDIMENT SAMPLING
SITCUM WATERWAY REMEDIATION PROJECT

CONTENTS

	Page
Introduction	B-2-1
Assignment of Responsibilities	B-2-1
Hazard Evaluation and Control Measures	B-2-2
Medical Surveillance	B-2-10
Contingency	B-2-11
Telephone Numbers	B-2-12
Documentation	B-2-12
Follow Up Report	B-2-13
Training	B-2-13
Record of Health and Safety Requirement Communication	B-2-13

FIGURES

B-2-1 Deck Layout for Work Operations - U.S. Retriever
B-2-2 Decontamination Layout - Offshore Sediment Sampling
B-2-3 Route to Hospital Map
B-2-4 Field Health & Safety Report

ATTACHMENT B-2
HEALTH AND SAFETY PLAN FOR SEDIMENT SAMPLING
SITCUM WATERWAY REMEDIATION PROJECT

Introduction

The project team will perform sediment sampling in the Sitcum Waterway and the habitat/mitigation area at and beyond the mouth of the Milwaukee Waterway for the Sitcum Waterway Remediation Project. Major hazards are of physical nature in the form of vessel traffic, machinery, and containers; and those associated with sample collection and analysis activities such as diving and deployment of sampling equipment.

The requirements of this Health and Safety Plan address the hazards and appropriate hazard controls or protective measures and apply to Hart Crowser personnel, subcontractors, and others present or involved in sample collection and handling activities.

Assignment of Responsibilities

Hart Crowser Corporate Health and Safety Manager, David Chawes, C.I.H.

- Coordinate with contractors;
- Agency liaison on matters of health and safety;
- Address matters of corporate health and safety policy;
- Secondary contact in case of illness or injury; and
- Review project Health and Safety Plan.

Hart Crowser Project Health and Safety Manager, Philip A. Spadaro

- Coordinate with contractors;
- Develop project Health and Safety Plan;
- Communicate health and safety requirements to involved individuals;
- Consult with Corporate Health and Safety Manager as new site conditions arise; and
- Primary contact in case of illness or injury.

Hart Crowser Soils Laboratory Manager, Daniel Berta

- Ensure that all laboratory employees have been trained in safe laboratory procedures;
- Ensure that laboratory employees read the Material Safety Data Sheets (MSDS) or toxicological briefs for chemicals that they may be exposed to; and
- Post instructions in a prominent location for proper disposal of the most commonly used chemicals.

Hazard Evaluation and Control Measures

Contact with Potentially Contaminated Sediments

Potential Site Chemicals of Concern

Health and safety practices established for the Sitcum Waterway Remediation Project will be continued for the OMMP activities. Sampling and sample handling activities may result in limited exposure to potentially contaminated sediments. The sediments removed as part of the remedial action were known to contain various heavy metals and polynuclear aromatic hydrocarbons (PAHs); however, this Health and Safety Plan will consider their presence. Hydrogen sulfide may also be encountered in some of the samples.

This section presents pertinent toxicological information for potential site chemicals. The information presented covers potential toxic effects from relatively significant acute and/or chronic exposures, and is not meant to indicate that such effects might occur from the planned site activities. In general, the sediment samples are expected to contain chemicals of limited volatility at concentrations which are not expected to produce significant exposures. The types of planned work activities should also limit potential exposures at this site. Furthermore, appropriate protective equipment and monitoring will be used as discussed below to further minimize any exposures which might occur.

As a point of reference, standards for occupational exposures to these chemicals are included as available. As noted above, site exposures are

PEL	Permissible exposure limit.
TWA	Time-weighted average exposure limit for any 8-hour work shift of a 40-hour work week.
STEL	Short-term exposure limit expressed as a 15-minute time-weighted average and not to be exceeded at any time during a work day.
Ceiling	Ceiling exposure limit not to be exceeded at any time during a work day.
SKIN	Skin exposure.

PAHs Health Effects. PAH exposure can occur via inhalation of vapors, ingestion, and skin and eye contact. Skin contact can result in reddening or corrosion. Ingestion can cause nausea, vomiting, lowering of blood pressure, abdominal pain, convulsions, and coma. Damage to the central nervous system can also occur. The U.S. Department of Health and Human Services has classified 15 PAH compounds as having sufficient evidence for carcinogenicity, while the EPA has classified at least 5 PAHs as human carcinogens. There are no currently assigned PEL-TWA for PAHs, but the closely related material coal tar is regulated as coal tar pitch volatiles with a PEL-TWA of 0.2 milligrams per cubic meter (mg/m^3). The American Conference of Governmental Industrial Hygienists (ACGIH) also lists coal tar pitch volatiles as a confirmed human carcinogen.

Arsenic Health Effects. Arsenic is toxic by inhalation and ingestion of dusts and fumes or by inhalation of arsine gas. Trivalent arsenic compounds are the most toxic to humans, with significant corrosive effects on the skin, eyes, and mucous membranes. Dermatitis also frequently occurs, and skin sensitization and contact dermatitis may result from arsenic trioxide or pentoxide. Trivalent arsenic interacts with a number of sulfhydryl proteins and enzymes, altering their normal biological function. Ingestion of arsenic can result in fever, anorexia, cardiac abnormalities, and neurological damage. Liver injury can accompany chronic exposure. Skin and inhalation exposure to arsenic has been associated with cancer in humans, particularly among workers in the arsenical-pesticide industry or

This disease is hard to diagnose, but may include symptoms of decreased physical fitness, fatigue, sleep disturbances, headaches, aching bones and muscle, digestive symptoms (constipation), abdominal pains, and decreased appetite. These symptoms are reversible and complete recovery is possible.

Severe exposure could lead to anemia, pallor, a "lead-line" on the gums, and decreased hand-grip strength. Nerve damage may occur, with symptoms such as "wrist-drop." These symptoms may be irreversible. Further damage can occur to the nervous system and the kidneys. The PEL-TWA for lead is 0.05 mg/m^3.

Copper Health Effects. Copper exposure can occur via inhalation of dust or fume, ingestion, or skin and eye contact. Copper salts can act as skin irritants, causing itching and dermatitis. Eye contact can result in severe damage, including corneal damage. Metallic copper can result in skin thickening, but is not associated with dermatitis in industrial settings. Copper dusts can irritate the respiratory tract. Ingestion can result in irritation, but industrial exposure seldom results in damage because copper salts normally induce vomiting. Extensive exposure can damage the lungs, kidneys, skin, and liver. The current PEL-TWA for copper as dust and mists is 1.0 mg/m^3.

Cadmium Health Effects. Cadmium is toxic via inhalation or ingestion of fumes or dust. Acute effects resulting from such exposures include respiratory distress and irritation which may culminate in chronic emphysema. Chronic exposure to fumes or dust may result in emphysema and kidney damage. These effects may be worsened by smoking. Cadmium is considered to be a probable human carcinogen. The current PEL-TWA for cadmium is 0.005 mg/m^3.

Zinc Health Effects. Zinc can be hazardous by inhalation of dust and fumes, ingestion, and skin and eye contact. Solid zinc chloride is corrosive to skin and mucous membranes, and sensitization can occur resulting in dermatitis. Eye contact can produce inflammation and corneal ulceration. Ingestion can result in corrosive damage to the digestive tract. The current PEL-TWA for exposure to zinc chloride fume is 1 mg/m^3.

Inorganic mercury compounds are toxic by inhalation, ingestion, and skin and eye contact. Acute poisoning results in lung damage. Chronic poisoning typically produces four classical symptoms: gingivitis; salivation; increased irritability; and muscular tremors. Delirium and other psychological abnormalities can also result from chronic exposures. Inorganic mercurials also have a corrosive effect on the alimentary tract, and kidney damage can result from exposure. The current PEL for inorganic mercury is 0.1 mg/m^3 (ceiling, SKIN).

Organomercury compounds include the methyl mercuries and aryl mercuries, many of which are used as herbicides or pesticides. Methyl mercury is toxic by inhalation, resulting in central nervous system damage manifested in tremors or sensory disturbances. Infants exposed to high methyl mercury before birth can exhibit severe central nervous damage. The current PEL-TWA for organo-alkyl compounds as Hg is 0.01 mg/m^3 with an STEL of 0.03 mg/m^3 (both SKIN), and the PEL for aryl mercury compounds is the same as for inorganic mercury, described above.

Chromium Health Effects. Chromium metal and insoluble chromium salts can affect the body if inhaled or swallowed. Ferrochrome alloys have been associated with lung disease in humans. Certain forms of chromium (VI) compounds have been found to cause increased respiratory cancer among workers. Unless it can be demonstrated that no chromium (VI) compounds are present, it should be treated as a carcinogen. The PEL-TWA for chromium (III) compounds it is 0.5 mg/m^3, and for chromic acids and chromates (chromium VI) the PEL is 0.1 mg/m^3.

Hydrogen Sulfide Health Effects. Hydrogen sulfide is a gas which is potentially toxic via inhalation, ingestion, and skin and eye contact. Inhalation can result in respiratory irritation, rhinitis, and edema of the lungs. Eye irritation results from exposure to hydrogen sulfide, and symptoms include photophobia and lacrimation. Subacute exposures to hydrogen sulfide may result in headache, dizziness, staggering gate, and agitation. Tremors, weakness, nausea, and diarrhea may also occur, but recovery is usually complete from such exposures. Acute exposure at higher concentrations may result in immediate coma, and death can follow rapidly as a consequence of respiratory failure. The mode of toxic action involved in this reaction is believed to be inhibition of the respiratory

Inhalation. This route of entry could occur if volatile chemicals or dried sediments become airborne during site activities, especially upon exposure to open air, warm temperatures, and sunlight. Based on previous site information, however, volatile organic chemicals are not expected to be present in the sediments at levels of concern for occupational exposures. It is possible that hydrogen sulfide could be encountered at levels of concern for occupational exposure in some sediment samples. Air monitoring and control measures specified below in this plan will minimize the possibility for inhalation of hydrogen sulfide.

Skin Contact. This route of entry could occur if contaminated sediments contact the skin or clothing. Protective clothing and decontamination activities specified in this plan will minimize the potential for skin contact with the contaminants.

Ingestion. This route of entry could occur if individuals eat, drink, smoke, or perform other hand-to-mouth contact in contaminated areas. Eating or drinking will be restricted to clean areas and personal decontamination will be required prior to these activities. Smoking will not be permitted in any active work areas. Decontamination procedures, discussed below, will minimize the inadvertent ingestion of contaminants.

Air Monitoring and Action Levels

Personnel who handle sediments will wear hydrogen sulfide detector badges. The badges indicate the presence of hydrogen sulfide colorimetrically, and will turn from white to brown with a 10 minute exposure to hydrogen sulfide at the PEL level of 10 ppm. The badges have a 6 month shelf life from the date of receipt, and will not be used in the field beyond 5 months from receipt. If any badges at any time register a color change, the Field Health and Safety Manager will arrange for fan ventilation of the work area. Monitoring will be continued to ensure that hydrogen sulfide levels remain below the PEL. A portable hydrogen sulfide sensing meter (MSA 361 or equivalent) will also be available for measuring ambient concentrations on a continuous basis, as needed.

Protective Clothing

Work Zones and Decontamination Procedures

Site control will be accomplished by establishing exclusion, contamination reduction, and support zones on the work boat, barge, and all land work areas. These zones will be required whenever contaminated sediments or samples are being handled. As an example, Figure B-2-1 demonstrates the general plan for establishment of these zones aboard the U.S. Retriever. Exact zone locations will be established for the contracted sampling vessel during the field work start-up activities.

Personal decontamination procedures, as shown on Figure B-2-2, will be followed whenever contamination of the clothing or skin occurs. The field representative shall ensure that these procedures are followed. The field representative will have an emergency eye wash bottle, soap, and five gallons of fresh water for washing. Scrub brushes and buckets will also be available. All personnel handling full core liners will wash their hands prior to eating, drinking, or attending to personal needs.

Physical Hazards due to Machinery

The sampling vessel will be equipped with various winches, motors, booms, and other machines. These present a general physical hazard from moving parts.

Personnel will stand clear of machinery at all times unless specific instructions are given by the vessel skipper or other person in authority. Hard hats and steel toe shoes or boots will be worn at all times when on the vessel. When possible, appropriate guards will be in place during equipment use.

Falling in the Water

As with any offshore work, there is a possibility of falling overboard. When possible, personnel will stand well in from the edges of the deck. Personal floatation devices will be worn at all times when on the vessel. At least one person trained in First Aid and CPR will be on site at all times.

Chapter 296-37 WAC will be performed by a commercial diver in full compliance with Chapter 296-37 WAC.

Pre-Dive Procedures

- All divers will be issued and will read a copy of the Washington Department of Labor and Industries Title 296 WAC.

- A First Aid Kit appropriate for the diving operation shall be available at the dive location.

- An American Red Cross standard first-aid handbook and a bag-type manual resuscitator with transparent mask and tubing will be available at the dive location.

- The dive boat will be equipped with a VHF radio and cellular telephone to aid in obtaining emergency assistance.

- Only certified SCUBA divers will be allowed to use SCUBA equipment.

- SCUBA divers will take a CPR class, a basic first aid class, and a "Rescue Diver" safety class prior to engaging in any SCUBA diving activities.

- Divers shall always use the buddy system and work in teams or be in voice communication with the support vessel.

    - Each diver shall have the following safety equipment:

        - Buoyancy compensator with power inflator;
        - Tank pressure gauge;
        - Depth gauge;
        - "Octopus" regulator for emergency use;
        - Knife; and
        - Quick release buckle on the weight belt.

- Diving equipment will be inspected prior to each dive by the diver.

- If the dive is expected to be deeper than 40 feet, each dive team shall carry a U.S. Divers brand decompression meter.

- Divers will participate in a pre-dive briefing on the work to be performed, any unusual surface or underwater conditions or hazards, safety procedures, communications, any modifications to standard operating procedures necessitated by the specific diving operation.

- Divers who feel that they cannot safely dive for any reason (health, strong currents, boat traffic, etc.) shall immediately terminate the dive until the problem is corrected.

- Decompression diving will not be performed. A decompression meter will be used to keep the bottom time down to the point that decompression is not required.

- Divers will not exceed 75 feet in depth at any time.

- Diving will not be performed in currents exceeding 1 knot in speed.

- The dive-tending boat's engine shall be shut down when divers are leaving or entering the boat unless doing so would result in a serious risk to the vessel.

- A diver tender will remain in the boat while divers are in the water. It is the responsibility of the tender to keep other boats away from the dive site and to aid the divers as necessary.

- The dive tender shall not deploy anchors or lower or lift heavy objects over the side of the boat which could fall on the divers. Such movement of heavy objects shall only be permitted if the dive tender and SCUBA divers can coordinate their actions to eliminate any risk (for example, divers would stay underneath a pier while the operation is in progress).

- The appropriate safety warning flags shall be flown while divers are in the water. Both the red and white "Diver Down" flag and the international "Alpha" flag (vessel has limited maneuverability) will

- Divers shall immediately report any physical problems or adverse physiological effects including symptoms of decompression sickness to the senior staff person at the dive site.

- Divers will arrange their schedule to avoid flying within 24 hours of diving.

- A dive log will be maintained which will include: Date, location, project number, bottom time, maximum depth, dive team members including designated person-in-charge, approximate underwater and surface conditions (visibility, water temperature and current) and purpose of dive.

- Any person involved in a SCUBA diving accident which results in unconsciousness will IMMEDIATELY be taken, by the fastest route available, to the nearest recompression chamber, Virginia Mason Hospital, 925 Seneca, Seattle, phone (206) 583-6433.

- For emergency transportation, call "911" for aid car or contact the U.S. Coast Guard on VHF channel 16. All diving accidents are life threatening and should be considered a "Mayday" situation.

- The diving partner of victim of a SCUBA accident shall accompany the victim to the hospital assure that the medical personnel are properly informed of the facts leading to the accident.

- If the victim is transported via aircraft, the flight crew should be urged to fly at the lowest safe altitude so that the victim's condition is not made worse by lowered ambient air pressure.

Medical Surveillance

- All employees will have a medical surveillance physical performed prior to working on the field site and annually thereafter. An additional medical surveillance physical will be performed as soon as possible following any emergency incident involving chemicals or at any time that signs or symptoms of a chemical overexposure are detected.

- The physician will:
  - Provide a written medical report containing:
    - The results of the medical examination.
    - The examining physician's opinion of the employee's fitness to be exposed to work site conditions including any recommended restrictions or limitations.
  - Notify patient of any abnormal findings at time of exam.
  - Call the employee's Safety Officer if there are any medical abnormalities or irregularities.
  - Supply patient with copies of exam results if they request them.
- The medical facility will retain all records of exam.
- The employer will pay all fees associated with the exam.
- The Occupational & Medical History (Baseline) physical examination will include the following:
  - Medical History and General Physical
  - Visual Acuity
  - Audiogram
  - Pulmonary Function Test
  - EKG w/interpretation
  - Occupational Medical Screen (CBC, UA-Micro, Calculations, HDL Cholesterol, Direct Bilirubin, T4)
  - Chest X-Ray (1 view, optional)
  - Occupational Medical Profile
  - Any other toxicology tests that the physician believes are appropriate.

Contingency

In case of illness or injury, use the local 911 to summon aid. If it is

If unanticipated conditions arise, contact the Corporate or Hart Crowser Project Health and Safety Manager.

Telephone Numbers

Hart Crowser Personnel	
Hart Crowser Home Office	324-9530
David C. Chawes	324-9530
Philip A. Spadaro	745-6037 (home)
	972-0474 (mobile)
David W. Templeton	487-6049 (home)
	369-3586 (mobile)
U.S. EPA Region 10	
General Information and Emergency	553-1200
Washington State Department of Ecology	
General Information and Emergency	867-7000
Coast Guard	
General Information	442-5295
Emergency	286-5400
VHF	Channel 16
Tacoma General Hospital	
General Information	594-1000
Emergency	594-1050
Virginia Mason Hospital	
General Information	624-1144
Emergency	583-6433
Emergency Services	
General Emergency	911

The primary sampling vessel will be equipped with a mobile telephone.

Documentation

Safety Manager for review and then filed with the project file at Hart Crowser.

In addition, all individuals expecting to work on the site will read this Health and Safety Plan, and indicate on the ***Record of Health and Safety Requirement Communication*** that they have read the plan and that they understand the requirements which are detailed for work practices on this project.

Follow Up Report

At the end of the work, health and safety monitoring information will be summarized for the project files.

Training

All of the project field personnel are professionals trained in a specific academic area.

The project team will consist of chemists, engineers, geologists, biologists, divers, vessel operators, sampling specialists, technicians, and industrial hygienists. They will all have received the required 40 hours of initial health and safety instruction, as well as periodic refreshers and additional training. Participants have attended conferences and seminars highlighting sampling and handling of hazardous substances. Many seminars have been devoted to the safe handling of hazardous substances and specific problems encountered on non-routine sites. In addition, some members of the team have attended courses presented by the U.S. Environmental Protection Agency's Environmental Response Team and similar courses given by private companies. Such course contents include: hazard recognition and evaluation, setting up work zones, field sampling methods and appropriate equipment, toxicology, and decontamination procedures. The field team also participates in regular in-house training programs. These programs review and update field personnel on the respiratory equipment, protective clothing, and field monitoring instruments. In addition to hazardous substance training, most members of the field team have attended an American Red Cross course in CPR and First Aid.

Port of Tacoma
April 6, 1994

PRINTED NAME	SIGNATURE	DATE
Philip A. Spadaro		
Anne G. Fitzpatrick		
David W. Templeton		
Yip Chun		

PRINTED NAME	SIGNATURE	DATE

ut for Work Operations

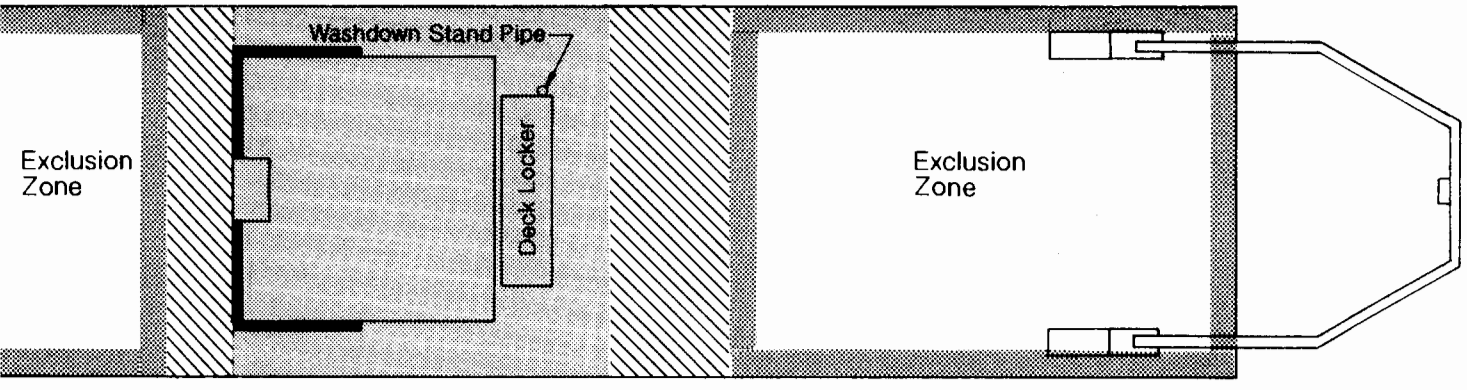

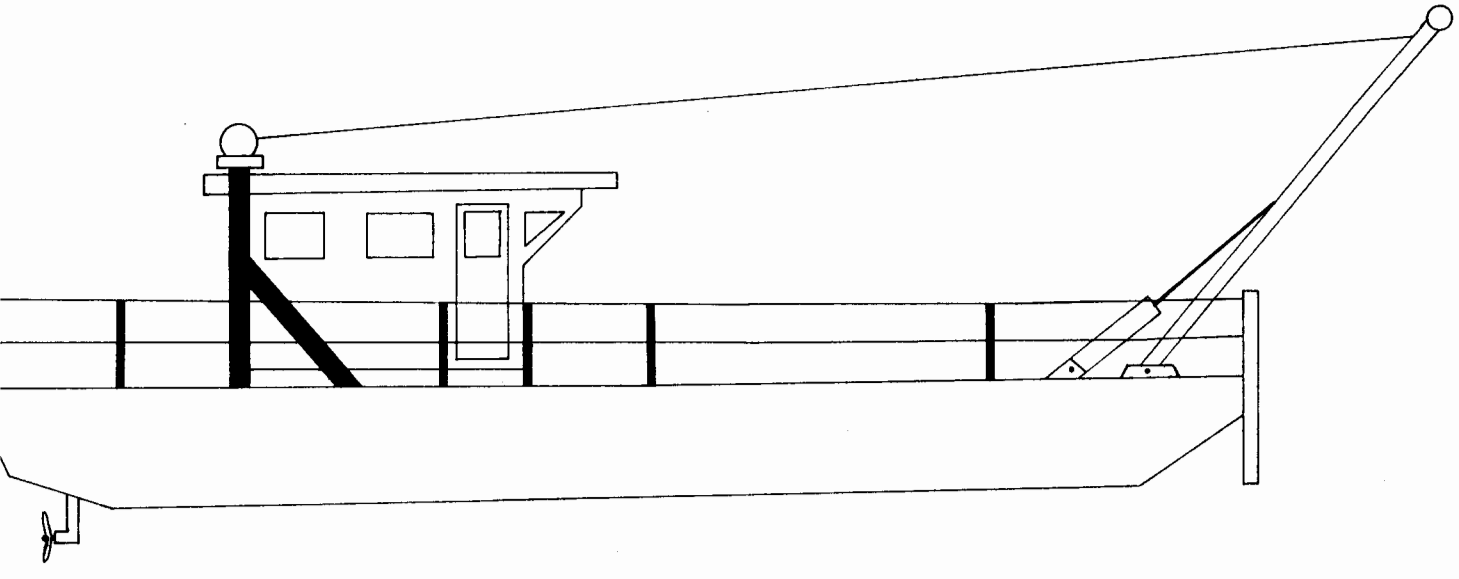

Contamination Reduction Zone

Support Zone

Not to Scale

Decontamination Layout

Offshore Sediment Sampling

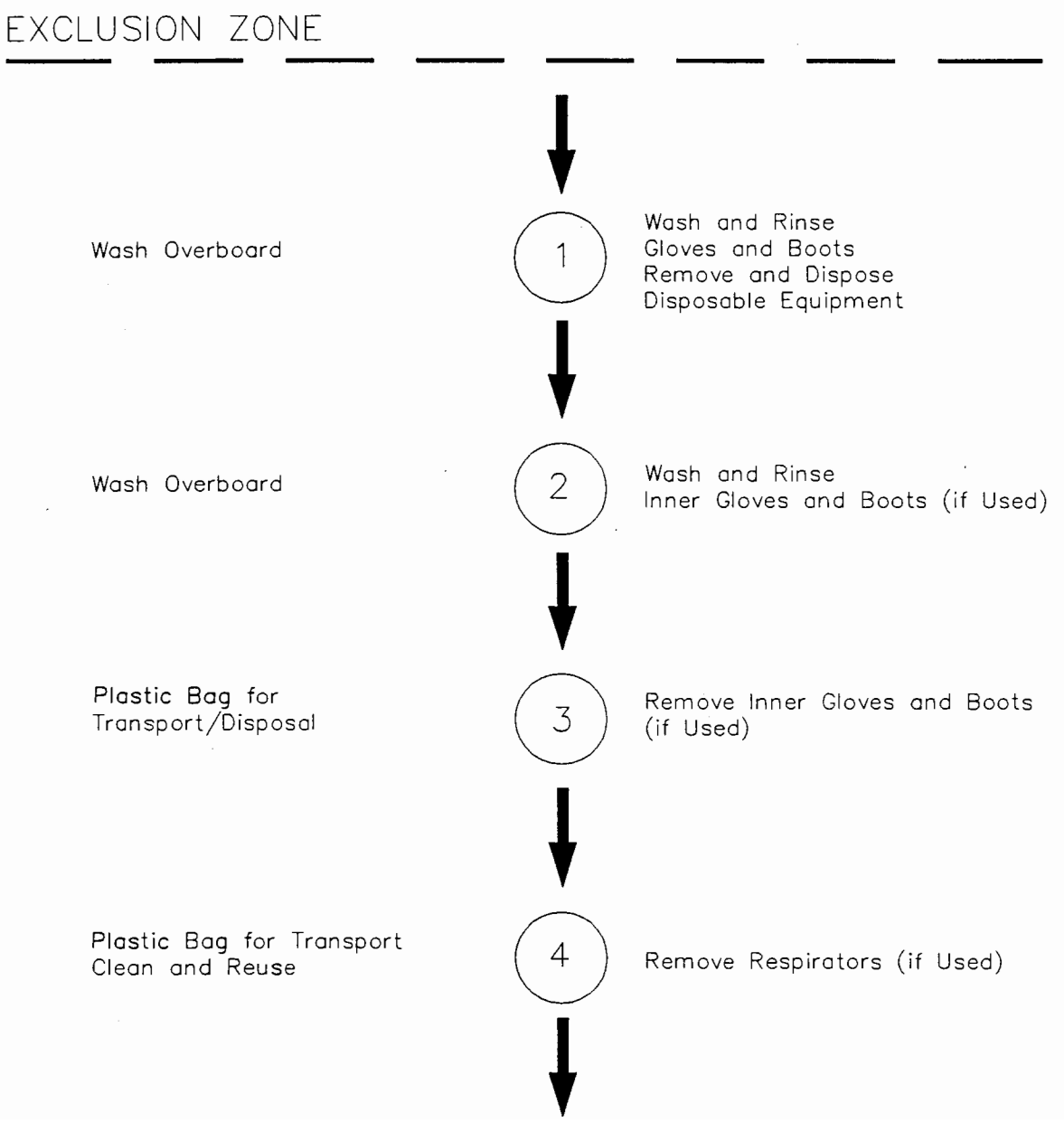

Route to Hospital Map

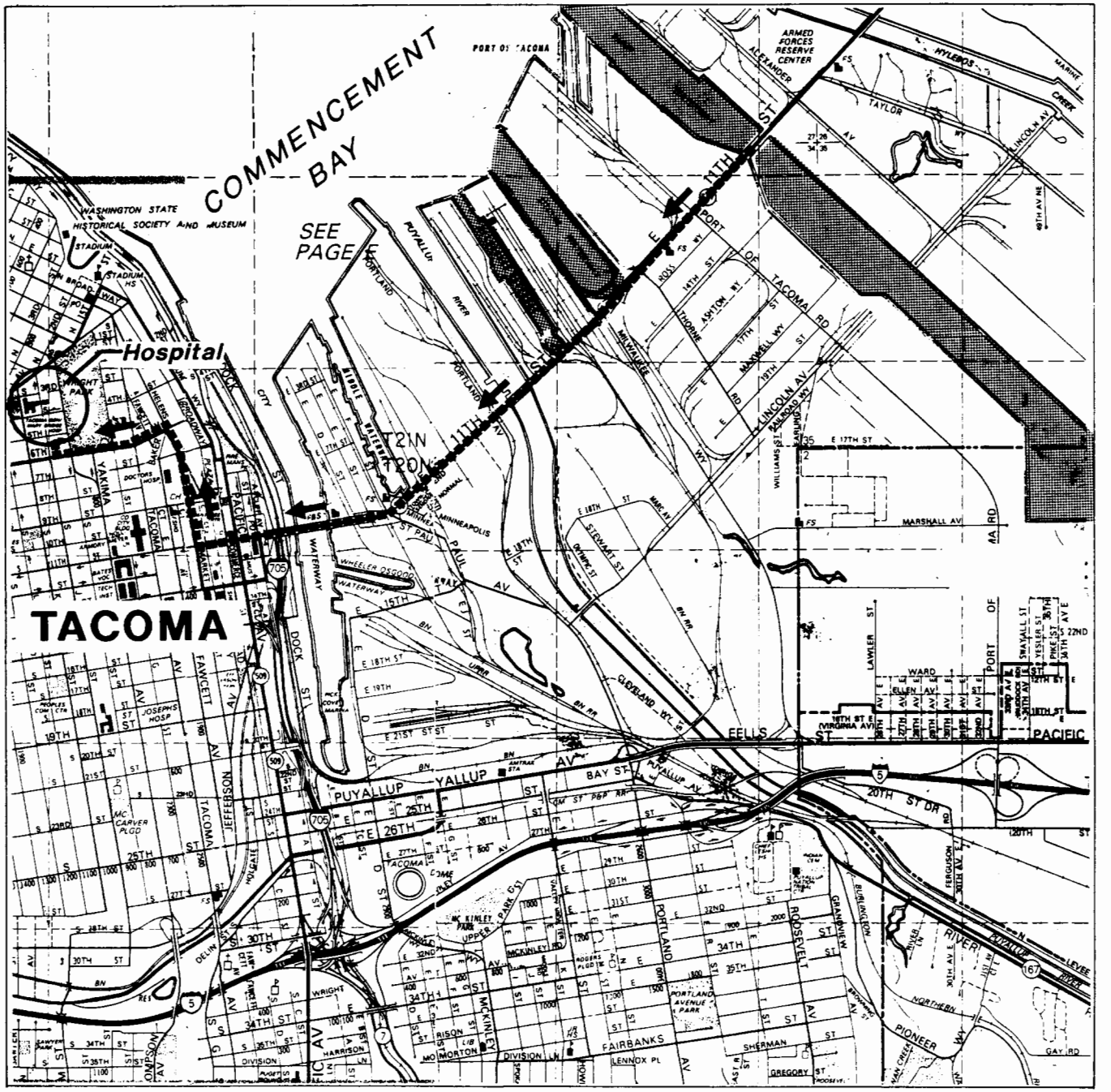

lealth & Safety Report

/SER

TH & SAFETY REPORT

JOB NO. ______
DATE ______
S M T W Th F S
ARRIVAL TIME: ______
DEPARTURE TIME: ______

ATIVE ______ PROJECT MANAGER ______
ER ______ PROJECT H&S MANAGER ______

INEL ON SITE ______

DS ______

USED ______

URES TAKEN ______

SERVATIONS ______

OF EQUIPMENT RELATIVE TO EXPLORATION
ING POINT(S) AND PREVAILING WIND DIRECTION

AIR MONITORING LOG

METER NUMBER 1, TYPE ______ CALIBRATED ______ CHECKED ______
METER NUMBER 2, TYPE ______ CALIBRATED ______ CHECKED ______
BACKGROUND READINGS: METER 1 ______ METER 2 ______

TIME	METER 1	METER 2	COMMENTS

Port of Tacoma
February 6, 1995

APPENDIX C
MONITORING MANUAL FOR THE HABITAT/MITIGATION AREA AT AND BEYOND THE MOUTH OF THE MILWAUKEE WATERWAY SITCUM WATERWAY REMEDIATION PROJECT

This appendix names specific contractors for various aspects of work. However, the Port reserves the right to select other qualified contractors with EPA approval.

CONTENTS

	Page
C.1.0 HABITAT/MITIGATION MONITORING MANUAL — MILWAUKEE WATERWAY	C-1
C.1.1 Physical Monitoring	C-1
C.1.1.1 Introduction	C-1
C.1.1.2 Scheduling	C-1
C.1.1.3 Preparation for Field Sampling	C-2
C.1.1.4 Field Sampling Protocols	C-2
C.1.1.5 Laboratory Procedures	C-5
C.1.1.6 Data Formats	C-6
C.1.2 Biological Monitoring	C-6
C.1.2.1 Introduction	C-6
C.1.2.2 Scheduling	C-6
C.1.2.3 Preparation for Field Sampling	C-7
C.1.2.4 Field Sampling Protocols	C-7
C.1.2.5 Laboratory Procedures	C-23
C.1.2.6 Data Formats	C-27
C.2.0 DATA ANALYSIS AND PERFORMANCE STANDARDS	C-28
C.2.1 Benthic Infauna	C-28
C.2.1.1 Analysis of Benthic Infauna	C-28
C.2.1.2 Primary Factor Analysis	C-29
C.2.1.3 Secondary Factor Analysis	C-31
C.2.2 Epibenthic Plankters	C-33
C.2.3 Plant Assemblage and Coverage (Saltmarsh and Upland)	C-33
C.2.4 Avifauna	C-33
C.2.5 Benthic Microalgae	C-33
C.2.6 Benthic Macroalgae	C-33
C.2.7 Juvenile Salmonid Utilization Study	C-34

FIGURES

C-1 Physical Monitoring - Survey of Habitat Boundaries

C-2 Physical Monitoring - Permanent Elevation Transects and Substrate Sampling Locations

C-3 Physical Monitoring - Permanent Photograph Points and Perspectives

C-4 Biological Monitoring - Epibenthic Plankters Sampling Locations (Approximate)

C-5 Biological Monitoring - Benthic Infauna Sampling Locations (Approximate)

C-6 Flow Chart of Analysis of Benthic Infauna and Epibenthic Plankter Data

ATTACHMENT C-1
QUALITY ASSURANCE PROJECT PLAN FOR
HABITAT/MITIGATION MONITORING
SITCUM WATERWAY REMEDIATION PROJECT

ATTACHMENT C-2
HEALTH AND SAFETY PLAN FOR HABITAT/
MITIGATION MONITORING
SITCUM WATERWAY REMEDIATION PROJECT

APPENDIX C
MONITORING MANUAL FOR THE HABITAT/MITIGATION AREA AT AND BEYOND THE MOUTH OF THE MILWAUKEE WATERWAY
SITCUM WATERWAY REMEDIATION PROJECT

C.1.0 HABITAT/MITIGATION MONITORING MANUAL — MILWAUKEE WATERWAY

C.1.1 Physical Monitoring

C.1.1.1 Introduction

The purpose of this long-term physical monitoring is to document the acreage occupied by different habitat types; changes in the elevation of the habitat in relation to established reference points; and the substrate characteristics at fixed reference points. Additional characterization of substrates is included in Section C.1.2 as part of the biological monitoring. Fixed photo points are included to ensure adequate photographic coverage of the habitat/mitigation site.

This appendix presents the field and laboratory procedures necessary to conduct the monitoring. Attachments C-1 and C-2 present the Quality Assurance Project Plan and Health and Safety Plan for these activities, respectively.

C.1.1.2 Scheduling

The physical monitoring of the mitigation site includes an "as-built" survey that occurs immediately after construction to document the final constructed configuration, compliance with the approved plans and specifications, and to serve as a baseline for post-construction monitoring to detect erosion and deposition in subsequent years. All physical sampling will occur in the spring or summer during a low tide cycle to

C.1.1.3 Preparation for Field Sampling

Before going into the field a series of steps are necessary:

- Review this manual: Become familiar with the Field Sampling Protocols. If questions arise, ask the project manager.

- Submit reference areas for EPA approval along with supporting rationale, at least six months prior to sampling.

- Contact the Port of Tacoma: Notify the Port of Tacoma project manager of the sampling schedule. Arrange access to the study and reference areas, if necessary. Access by boat does not require special permission. The mouth of the Milwaukee Waterway is accessible by boat or vehicle without special permission.

- Mobilization/demobilization: Field equipment check-off lists will be available for each type of sampling event. Notify the field equipment manager at least 1 week prior to a sampling event to ensure that all equipment will be available. Ensure that sufficient Ziploc bags are available to hold all the sediment cores collected. Electronic instrumentation such as the total station EDM will be checked, and field personnel will review operating procedures.

C.1.1.4 Field Sampling Protocols

Acreage by Habitat Type. Surveying of the different habitat types and calculation of the acreage of different habitat types will be accomplished with the use of a total station EDM or similar instrument. The survey bench mark will be tied to state plane coordinates and elevations referenced to the Port of Tacoma (Port) and U.S. Army Corps of Engineers' datum for Mean Lower Low Water (MLLW). All survey points measured will include both the coordinates and the elevation.

The saltmarsh, the high intertidal sandflat/mudflat, and the gravel/cobble

The sandflat/mudflat habitats below about 0 ft MLLW will not be delineated into separate components. The focus of the survey in the areas below 0 ft MLLW will be on determining the location of the -10-ft and -4-ft contour lines that bound the outer portion of Mitigation Area 2 (see Figure C-1). At a minimum, the survey will extend out to the coordinates of the -10-ft and -4-ft contours, as defined by the as-built survey.

Elevation of Transects. Changes in the bathymetric contours of the habitat/mitigation area will be documented using standard land surveying techniques along four permanent transects (Figure C-2). Elevation profiles will be surveyed referenced to MLLW.

Mitigation Area 1 will be surveyed along two transects. The first transect (Transect 1, Figure C-2) will be established 300 ft north of the closure berm and will be perpendicular to the slope of the beach. Two surveyed benchmarks will be placed on the top of the east and west banks. The elevation profile along the transect will be determined using standard survey techniques referenced to MLLW. The second transect (Transect 2, Figure C-2) will be established at the mouth of the waterway using surveyed benchmarks placed on the top of the east and west banks at the ends of the peninsulas. The distance between survey points along the transects will be variable depending on the complexity of the slope. The survey points will be a minimum of 50 ft apart and a maximum of 100 ft apart.

Mitigation Area 2 will be surveyed along two transects. The first transect (Transect 3, Figure C-2) will be established 200 ft from the end of the peninsula approximately parallel to the inner harbor line. The second transect (Transect 4, Figure C-2) will be located 300 ft beyond Transect 3. The zero reference points for both transects will be located on the training wall. These reference points will be tied to benchmarks established on the peninsula. The survey points will be spaced 100 ft apart. Systematic placement of points every 100 ft is expected to be appropriate in this uniformly sloped habitat.

each of the surveyed transect lines. See Section C.1.2 for discussion of additional substrate sampling tied to biological sampling.

For Transects 1 and 2, sediment samples will be collected at points 150 and 350 ft east from the top of the west bank. Sediment cores will be taken at locations 500 and 700 ft east of the training wall along Transects 3 and 4.

Sediment cores will be collected at low tide with a 4-in-diameter hand-held corer. In the event that a corer cannot be used successfully, an alternate sampling method will be used (e.g., excavation of quadrats). The core sampler will be placed on the sediment surface and pushed into the surface with a repeated twisting motion (clockwise to counterclockwise). The valve on the top of the corer will remain open during this operation to allow air and water to escape. The substrate will be penetrated completely (to approximately 10 cm) so that the top of the sampler is level with the sediment surface. The sampler will be inserted slowly, and compression of the top of the sampler against the sediment surface will be avoided to minimize loss of solid material through the venting valve. Sufficient adjacent material will be removed to allow space to slide the sample retention plate in a slot near the bottom of the sampler. After the sample retention plate is inserted, the valve on the sampler will be closed, and the sampler will be withdrawn from the substrate.

After the sampler has been withdrawn from the substrate, the sample will be inspected carefully before it is accepted. Sample quality comments on leakage, winnowing, and disturbance will be recorded.

After a sample is accepted, the Qualitative Sample Characteristic form will be completed. The fields are: date (MM/DD/YY), location, elevation (± ft MLLW), depth, replicate, time, gear type, initials of the collector, and sample type. The surficial sample characteristics—color, odors, and presence of biological or debris structures—will be described. Vertical profile characteristics will be described relative to changes in

Photo Points. Photographic documentation of the habitat/mitigation areas requires establishment of set photo points around the waterway. Photo points will be established on top of the bank near the intersection of the closure berm and the east and west sides of the waterway. Additional points will be established at the corners of the peninsulas between the Puyallup River and Milwaukee Waterway, and the Milwaukee and Sitcum waterways and on the western edge of Mitigation Area 1. The precise locations for the photo points will be determined in the field based on their relative value for documenting conditions. These photo points will be surveyed and marked with permanent stakes.

All photographs will be taken at low tide (maximum water elevation 0-ft MLLW). Photographs of Mitigation Area 2 should be taken at tide levels below -2 ft MLLW if possible. Figure C-3 shows the locations of the photo points and the appropriate direction for each photograph. Two exposures will be taken in each of the directions shown.

All photographs will be taken at a set height above the ground level. Film speed will be less than or equal to 100 ASA. Photos will include a portion of the shoreline in the field of view when possible. A photographic log will be kept and will include the date, time, photo point designation, compass bearing, lens focal length, and photographer. In subsequent years, copies of photographs will be taken into the field to aid in obtaining similar perspectives.

C.1.1.5 Laboratory Procedures

Grain size distribution will be analyzed on samples in general accordance with ASTM D 422. Wet sieve analysis will be used to determine the size distribution greater than the U.S. No. 200 mesh sieve. The size distribution for particles smaller than the No. 200 mesh sieve will be determined by hydrometer or pipet method for a selected number of samples. The results of the hydrometer test will be presented as curves plotting percent fines by weight versus grain size. The results of the pipet tests will be tabulated presenting percent fines versus phi size.

C.1.1.6 Data Formats

All electronic data will be reported in a format consistent with guidance contained in : *Instructions for Formatting of Digital Data - Sediment (Chemical, Benthic, Bioassay), Water Column, and Shellfish Monitoring Data - Commencement Bay Nearshore/Tideflats Superfund Site* (USEPA, 1994).

C.1.2 Biological Monitoring

C.1.2.1 Introduction

The purpose of the long-term biological monitoring program is to document changes in the flora and fauna of the habitat/mitigation area and test conditions against performance standards. The habitats monitored include the saltmarsh, the gravel/cobble habitat, and sandflat/mudflat habitat in Mitigation Area 2. With the exception of the vascular plants planted in the saltmarsh and the uplands, the establishment of the plant communities (macroalgae and microalgae) will be by natural recruitment.

C.1.2.2 Scheduling

Emergent Marsh (Saltmarsh). Sampling of the rooted vascular plant assemblage will occur during the season of peak biomass production in late August to early September. Avifauna observations will be made once a month in January, April, July, and October.

Sandflat/mudflat. Sampling of the benthic macroalgae community will occur during the period of peak biomass production (July). The benthic microalgae community will be measured once in May. Sampling of the epibenthic plankters will occur three times during the spring (late April, mid-May, and early June), spaced about three weeks apart. Avifauna observations will be made once in January, April, July, and October. Sampling of the benthic infauna will occur in March.

Upland. Sampling the upland habitat will occur during the season of peak biomass production in late August to early September. Avifauna observations will be made once in January, April, July, and October.

C.1.2.3 Preparation for Field Sampling

Before going into the field a series of steps are necessary:

- Review this manual: Become familiar with the Field Sampling Protocols. If questions arise, ask the project manager.

- Contact the Port of Tacoma: Notify the Port of Tacoma project manager of sampling schedule. Arrange access to the study and reference areas, if necessary. Access by boat does not require special permission. The mouth of the Milwaukee Waterway is accessible by boat or vehicle without special permission.

- Contact state agencies: Obtain the necessary sampling permits.

- Contact subcontractors, if appropriate: About 1 week prior to the sampling event, notify the subcontracting project manager regarding:

  - Date of sampling and date of sample delivery to lab
  - Work to be performed
  - Date results are needed
  - Compensation.

- Mobilization/demobilization: Field equipment check-off lists will be available for each type of sampling event. Notify the field equipment manager at least 1 week prior to a sampling event to ensure that all equipment will be available. Collect sufficient bottles and Ziploc containers for all the samples. Check and calibrate electronic instrumentation such as dissolved oxygen meters. Collect sufficient coolers, blue ice cold packs, and field preservatives.

Emergent Marsh (Saltmarsh). Sampling will be conducted to measure four parameters that assess the following habitat attributes:

- Plant assemblage and coverage
- Avifauna.

- **Plant Assemblage and Coverage.** The composition and percent cover of the rooted vascular plant assemblage in the saltmarsh and reference area(s) will be assessed during the period of peak biomass in late August to early September. Qualitative indicators of performance will also be recorded. An assessment will be made of the presence and absence of planted species, and presence of species that have established naturally. Other information such as apparent stress or death, and dead plants will be recorded.

  Because of low initial planting densities, the sampling units in the established saltmarsh will be 1.0 m^2 quadrats. This 1 m^2 quadrat will be divided into four 0.25 m^2 sections that will be enumerated separately. Later in the monitoring program, as plant density increases, a single 0.25 m^2 quadrat will be used.

  A random stratified sampling design will be used to establish the permanent sampling points. Sampling points in the saltmarsh will be determined using a baseline established along the top of the bank on the peninsula between the Milwaukee Waterway and Puyallup River. The baseline establishes the starting points for each of five transects that will project easterly from the baseline. The baseline will be marked at 10 ft intervals. Each of these points defines a potential transect that projects perpendicularly from the baseline. When the first sampling event is to occur, random numbers will be selected to determine which of the potential transects will be sampled then and in the future. The precise sampling locations will be established by setting a quadrat at two elevations (+11.5 and +10 ft MLLW) along each of the five transects. The following parameters will be measured in each quadrat:

2. Locate the +11.5 and +10 ft MLLW isobaths on each transect (all elevations are based on MLLW).

3. Place the quadrat perpendicular to the transect and with the upslope edge at the designated tidal elevation.

4. Record the elevation on the field data form.

5. Identify each of the species present in the quadrat and record them on the field data form.

6. Collect a representative specimen of any unknown plant species and place it in a labeled bag. Information included on the label will include transect, elevation, collection time and date, and a temporary field name. Record additional field data concerning the species using the temporary field name.

B. Percent cover by species:

Visually estimate the cover class for each taxon present and record it on the field data form. Cover classes are <1 percent, 1 to 5 percent, 6 to 15 percent, 16 to 25 percent, 26 to 50 percent, 51 to 75 percent, 76 to 95 percent, 96 to 100 percent and are listed on the bottom of the field data form. Total percent cover may exceed 100 in communities with more than one vegetation layer (i.e., canopy, understory, surface).

C. Shoot/stem density:

Enter the number of shoots/stems of each taxon within the quadrat. Count standing live shoots/stems (i.e., those with green leaves) separately from standing dead shoots/stems.

- **Avifauna.** Observations will be made using binoculars and spotting scopes from an established and permanently marked location. Species occurrence will be determined, and generally plotted on a map of the

2. Record site location, time of day, weather conditions, and tide level on the field data form.

3. Observe for a 2-hour period on the falling tide and for a second 2-hour period on the rising tide.

4. Identify birds observed in the saltmarsh to species, and, when possible, sex and life history stage.

Sandflat/mudflat. Sampling will be conducted to measure ten parameters that assess the following five habitat attributes:

- Benthic microalgae
- Benthic macroalgae
- Avifauna
- Epibenthic plankters
- Benthic infauna.

- **Benthic Microalgae.** Measurement of the benthic microalgae community of the sandflat/mudflat will be conducted once during May. One location (at -2.0 ft MLLW in Mitigation Area 2) will be sampled by collecting five replicate samples. The samples will be analyzed for chlorophyll *a* content as an estimate of algal biomass.

  A. Total standing stock:

  1. Record the transect designation, date, time, and core size on the field data form.

  2. Record the elevation on the field data form.

  3. Using the modified plastic 5-cc syringe as a piston corer, extract a core approximately 1 cm in diameter and 1 cm deep.

  4. Transfer the core to 20-ml glass jars.

6. Record the field sample ID number on the field data sheet.

7. Pack the vials in ice in a cooler as soon after collection as possible for transfer to the laboratory. Minimize exposure to light to prevent degradation of the chlorophylls.

8. After collection of the samples, place the chain-of-custody forms in a Ziploc bag, seal them in the cooler with the samples, and deliver them to the laboratory where additional processing will determine levels of chlorophyll.

- **Benthic Macroalgae.** Measurement of the benthic macroalgal community in the sandflat/mudflat will be conducted once during July. Sampling points will be determined by a baseline established along the training wall off the peninsula between the Milwaukee Waterway and Puyallup River. The baseline establishes the starting points for each of five transects that will project easterly from the baseline. The baseline will be marked at 10-ft intervals, each of these points defines a potential transect that projects perpendicularly from the baseline to intersect with an isobath to define a sampling location. When the first sampling event is to occur, random numbers will be selected to determine which of the potential transects will be sampled then and in the future.

  The five transects are established perpendicular to the training wall down slope of the survey points. Sample sites will be located at the +2.0 and -2.0 ft MLLW elevations. A 0.25-m^2 benthic quadrat will be measured at each sample site. Within each quadrat the presence/absence and percent cover by species will be determined. Representative samples of any unknown species will be collected and returned to the laboratory for positive identification. Field data collected for an unknown species will be recorded using a temporary field name recorded on the specimen label.

  A. Percent cover by species:

3. Place the quadrat perpendicular to the transect at the designated tidal elevation.

4. Record the sample elevation on the field data form.

5. Identify each of the species present in the quadrat and record them on the field data form.

6. Collect a representative specimen of any unknown species and place it in a labeled bag. Include transect, elevation, collection time and date, and a temporary field name on the label. Record additional field data concerning the species using the temporary field name.

Visually estimate the cover class for each taxa present and record it on the field data form. Cover classes are <1 percent, 1 to 5 percent, 6 to 15 percent, 16 to 25 percent, 26 to 50 percent, 51 to 75 percent, 76 to 95 percent, and 96 to 100 percent and are listed on the bottom of the field data form. Total percent cover may exceed 100 percent in communities with vegetation layers (i.e., canopy, understory, surface).

- **Avifauna.** Observations of shorebirds and waterfowl on the sandflat/mudflat habitat will follow the procedures outlined for the saltmarsh habitat.

- **Epibenthic Plankters.** Sampling of the epibenthic plankters of the sandflat/mudflat habitat will be conducted during late April, mid-May and early June. The first year that sampling is conducted, five samples will be collected from along the -2 ft MLLW isobath. In subsequent sampling efforts, twenty-five randomly selected locations will be sampled along the -2 ft MLLW isobath (Figure C-4). One sample will be collected at each location. The samples will be collected using a 0.018 m^2 suction sampler. Fifteen samples will be sent to the laboratory for analysis and the balance archived for five

The following outlines the procedure for using the suction pump.

A. Species occurrence:

1. Randomly locate twenty-five sampling locations along the -2-ft isobath.

2. Before taking each sample, clear the pump by running it for 10 seconds, holding the pump in the water but off the bottom.

3. To collect the sample, place the pump gently on the bottom and run the pump for 30 seconds directing the pump discharge hose into a sieve no larger than 253-μm. A smaller sieve can be used.

4. If the pump draws a large amount of silt or sand, the sieve may clog before 30 seconds have elapsed (sampling on a calm day will decrease this problem). In this case, move the hose around the sieve to distribute the sediment evenly. If the sieve becomes too clogged and sample is repeatedly lost over the top, reduce pump running time to a minimum of 15 seconds. Note this reduction on the field chain-of-custody form under "comments."

5. After sieving, rinse the sample to one edge of the screen and flush the sample into a labeled sample container using water from a squirt bottle; fill the sample jar no more than half full of water. Add an equal or greater volume of 10 percent formalin-Rose Bengal solution to fill the container.

   <u>Caution</u>: Formalin is a health hazard and a suspected carcinogen and may cause blindness if splashed in eyes; wear chemical-proof gloves and protective goggles and avoid breathing vapors.

7. Fill out a field chain-of-custody form to accompany the samples to the laboratory. Include: field ID number (on label); date (MM/DD/YY); collection time (2400 hr); and location and station, including transect designation and elevation (under "comments").

8. Place samples in a cooler with the appropriate chain-of-custody (signed off by the field personnel) and seal the cooler with a dated chain-of-custody seal. Transport the cooler to the laboratory.

9. Collect a sediment sample at one location out of five using a 4-inch diameter corer, as outlined in Section C.1.1.4. The corer should be inserted to a depth of 10 cm.

B. Settled volume:

Processing at the laboratory will provide information on settled volume of the sorted animals.

C. Density and standing stock:

Processing at the laboratory will yield counts and biomass for calculating density and standing stock.

- **Benthic Infauna.** A 4-inch diameter hand-held infauna core sampler is used to sample benthic infauna. Eight locations will be sampled, ten replicates will be collected at each of these locations. Eight replicates from each location will be sent to the laboratory for analysis and the balance archived. The archived samples will be analyzed at the discretion of the Port. In addition, one sample will be collected for grain size analysis at each of the locations. This sampling approach is proposed to allow testing between locations and within locations. It is expected that analysis will indicate that all of the samples are true replicates rather than pseudo replicates. Therefore,

A. Species occurrence:

The procedure to collect this sample type is as follows.

1. The core sampler is placed on the sediment surface and with a repeated twisting motion (clockwise to counter-clockwise) and encouraged to penetrate the sediment. The valve on the top surface of the core sampler remains open during this operation to allow air and water to escape.

2. The substrate is penetrated completely (to approximately 10 cm) so that the top of the sampler is level with the surface. The sampler is inserted slowly and compression of the top of the sampler against the sediment surface is avoided to minimize loss of solid material (and organisms) through the venting valve.

3. For easy withdrawal of the sampler, material around the core sampler is excavated by hand or with a trowel. Sufficient material is removed to allow space to place the sample retention plate in the slot near the bottom of the sampler.

4. After inserting the sample retention plate, the valve on the sampler is closed. The sampler is withdrawn slowly from the substrate to minimize sample disturbance.

5. Sieve the sample in the field using a 0.5 mm sieve, or a 1.0 mm sieve nested with a 0.5 mm sieve. If sieving in the field is not practical due to the grain size of the sediments, then whole samples will be preserved carefully in the field.

6. Wash the sample into a labeled sample container using water from a squirt bottle. Add a volume of 10 percent formalin-Rose Bengal solution to the container that is equal to the volume of sample and wash water.

7. Shake the sample immediately after adding the formalin and again 1 hour later to ensure complete fixing of the sample. Attach a label to the container.

8. Fill out a field chain-of-custody form to accompany the samples to the laboratory. Include: field ID number (on label); date (MM/DD/YY); collection time (2400 hr); and location and station, including transect designation and elevation (under "comments").

9. Place samples in a cooler with the appropriate chain-of-custody (signed off by the field personnel) and seal the cooler with a dated chain-of-custody seal. Transport the cooler to the laboratory.

B. Density and Standing Stock:

Processing at the laboratory will yield counts and biomass for calculating density and standing stock. Taxonomic analysis will be conducted to species or lowest practical taxonomic level.

Gravel/cobble. Sampling consists of measuring nine parameters to assess the following habitat attributes:

- Benthic macroalgae
- Avifauna
- Epibenthic plankters
- Benthic infauna.

- **Benthic Macroalgae.** Measurement of the benthic macroalgal community in the gravel-cobble habitat will be conducted once during July. Sampling points in the study area will be determined using a baseline established along the top of the western shore of the waterway. The baseline establishes the starting points for each of five transects that will project easterly from the baseline. The baseline will

random numbers will be selected to determine which of the potential transects will be used during a particular sampling event. Observations will be taken at +6.0 and +2.0 ft MLLW on each side of the waterway. A 0.25-m^2 benthic quadrat will be established at each sample site.

A. Percent cover by species: Procedures are the same as those for the sandflat/mudflat section with the exception that sampling is at +6.0 and +2.0 ft MLLW.

- **Epibenthic Plankters.** Sampling of the epibenthic plankters of the gravel/cobble habitat will be conducted during late April, mid-May and early June. Procedures will follow those outlined for the sandflat/mudflat with the following exceptions: samples will be collected along the +2.0 ft MLLW isobath on the west side of the waterway (see Figure C-4).

A. Species occurrence:

Use the procedures outlined for collection of epibenthic plankters on the sandflat/mudflat, except that samples are collected along the +2.0 ft MLLW isobath on the west side of the waterway.

B. Settled volume:

Processing at the laboratory will provide information on settled volume of the sorted animals.

C. Density and standing stock:

Processing at the laboratory will yield counts and biomass for calculating density and standing stock. Taxonomic analysis will be conducted to species or lowest practical taxonomic level.

- **Benthic Infauna.** Sampling of benthic infauna in the gravel/cobble

A. Species occurrence:

Use the procedures outlined for the sandflat/mudflat habitat except sample along the +2 ft MLLW isobath.

B. Density and standing stock:

Processing at the laboratory will yield counts and biomass for calculating density and standing stock.

- **Avifauna.** Observations of birds on the gravel/cobble habitat will follow the procedures outlined for the saltmarsh habitat.

A. Species occurrence:

Use the procedures outlined for avifauna observations in the saltmarsh section.

Upland Habitat. Sampling will be conducted to measure three parameters that assess the following habitat attribute:

- Plant assemblage and coverage

- **Plant Assemblage and Coverage.** The percent cover of the tree, shrub, and, herbaceous, and grass layers will be assessed during the period of peak biomass in August or early September. Qualitative indicators of performance will also be recorded. An assessment will be made of the presence and absence of planted species, and presence of species that have established naturally. Other information such as apparent stress or death, and dead plants will be recorded.

The sampling unit in the established upland will be 10-ft radius plots. Because the width of the upland behind the top of the bank is narrow (about 15 feet), and the total area is relatively small (1 acre or less), sampling points will initially be chosen randomly and then repeated

A minimum of twenty-five sampling points will be randomly located at approximately +19.5 ft MLLW. The following parameters will be measured in each sampling plot:

A. Percent survival.

Visually estimate the overall condition of the vegetation within the sampling plot. Record the number of trees and shrubs that are dead and the number that are alive and record it on the field data form.

B. Species diversity.

Record the number of species (including planted species and species that naturally establish) within each sampling plot and record it on the field data form. Count the number of live plants separately from dead plants.

C. Percent coverage by species:

Visually estimate the percent cover for each taxon present and record it on the field data form. Cover classes are <1 percent, 1 to 5 percent, 6 to 15 percent, 16 to 25 percent, 26 to 50 percent, 51 to 75 percent, 76 to 100 percent. The total percent cover may exceed 100 percent because there is more than one vegetation layer.

Qualitative indicators of performance will also be recorded. An assessment will be made of the presence and absence of planted species, and presence of species that have established naturally. Other information such as apparent stress or death, and dead plants will be recorded.

Juvenile Salmonid Utilization Study.

This monitoring effort contains four primary elements which are discussed below.

- Examining for marks
- Evaluation of mark retention

1. Sampling

Two types of sampling will be used to capture juvenile salmonids.

A. **Beach Seine Sampling.** A floating beach seine (37 X 2 m net with 18 m wings of 3 cm mesh and a 2 X 2.4 X 2.3 m bag of 6 mm mesh) will be used to sample. The seine will be deployed by a boat 30 m from the exposed beach and retrieved by two people standing on the beach.

- ▸ Boat crew:
  - Deploy the seine 30 m from and parallel to the exposed beach from the stern of a small boat. On the field data form, record the time when the seine is deployed.
  - While the shore crew is retrieving the seine, measure water salinity, water temperature, and dissolved oxygen. Record the data on the field data form.
- ▸ Shore crew:
  - Record the location, date (MM/DD/YY), the tide stage and heights, and weather conditions on the field data form.
  - Stand on the beach 40 m from your partner and retrieve the seine at about 10 m/minute using 30 m x 2 cm poly-propylene lines attached to the bridles at each wing end.
  - When the net is 20 m from shore, move to 10 m from your partner and pull the seine in to shore.

Collect a representative specimen of any unknown species and place it in a labeled bag. Information on the label will include location, collection time and date, and a temporary field name. Record additional field data concerning the species using the temporary field name. Conduct marking as outlined below.

B. **Trawl Sampling.** A small surface trawl or "townet" will be used to sample juvenile salmonids that have left the immediate shoreline area. The net will be identical to that used by Duker et al. (1989) and will have a mouth opening of approximately 3 m deep by 6.1 m wide and have mesh that varies in size along its length. Near the mouth of the net the mesh will be 76 mm tapering to 5 mm at the cod end. Two pipes, with floats at the top and weights at the bottom, will be attached to each side of the net to keep it open vertically. The net will be towed at an average speed of approximately 1 m s-1 (range 0.9 to 1.1 m s-1). Tows will be conducted for a standard period of 5 minutes.

1. Record the location, date (MM/DD/YY), tide stage and height, and weather conditions on the field data form.

2. Collect data on captured fish as described above under Beach Seine sampling.

2. Marking

A. Equipment - Marking will be conducted with a spray paint gun connected to either a compressor or a SCUBA tank of minimum capacity of 8 ft^3/min at 100 psi. Pressure should be set at approximately 100 psi during marking. Granular pigment of appropriate size will be used following the general methods of Phinney et al 1967.

B. If marking has been conducted during previous weeks examine

C. Hold unmarked fish in dip net and apply dye from approximately 18". Move net to roll fish and allow complete coverage of body parts. Focus spray at the opercles on each side of the fish. Use the appropriate dye for the sampling week as directed by the Project Manager.

3. Examination for Marks

A. Equipment - fish will be examined under a 20-watt ultraviolet light (blacklight) with a wave length between 3,000 an 4,400 A. The light will be contained within a portable darkened viewing chamber.

B. All captured juvenile salmonids will be examined under the ultra violet light by placing them in a porcelain pan. If fish are too active to allow examination, then an anaesthetic will be used. Special attention will be focused on the hard body parts that are most likely to retain pigments.

4. Mark Retention

The key to understanding the results of this monitoring effort is to have direct evidence of the longevity of the marks on the different groups of fish. Factors such as dye color, pressure of application, and fish size will effect the amount of pigment retained which will directly determine the visibility of the mark. Of particular importance is the state of development of the hard body parts (e.g., scales, opercles) at the time of marking, as these features are the sites of pigment retention. Mark retention will be examined for each marked group up through the end of the scheduled sampling.

A. Equipment for this work includes a floating live box with feeder. This equipment will be placed at the Port's dock on Sitcum Waterway or another secure location.

additional metal mesh will be affixed over the finer mesh to exclude entrance of predators into the live box. The top will be solid to provide shade for the fish during captivity.

Flotation will be attached to the sides of the live box and will consist of styrofoam or other suitable floatant. The buoyant material will be contained to prevent its release to the waterway.

The box will be partitioned into six holding chambers which are totally isolated from each other. Two of the chambers are allocated for each sampling period to allow segregation of fish by size to minimize agonistic behavior and predation.

B. After marking fish as outlined above, retain a subsample of at least ten of each species and year class for the retention study. Place small fish in one compartment of the live box and larger fish in another. If this is the second marking period, make sure fish are placed in a different compartment than were the previous week's fish.

C. Each day that sampling is conducted, load the fish feeder. The Project Manager will determine the daily ration of commercial fish food that should be administered to each compartment. On the last day of sampling each week, make provisions with Port staff to load the feeder sufficiently to cover the entire period until the next sampling event.

D. On the first day of each 3-day sampling period for recaptures, examine all the fish in the live box compartments using methods outlined in 3 above.

C.1.2.5 Laboratory Procedures

Emergent Marsh (Saltmarsh).

Sandflat/Mudflat.

- **Benthic Microalgae.**

A. Total standing stock: At the laboratory, samples will be processed within 24 hours of collection.

1. Wash the samples onto a glass fiber filter (1-μm mesh) and pump to dryness. Carry out all steps in the dark to prevent pigment breakdown.

2. Grind the sample in a mortar and pestle with 10 ml of 90 percent spectroanalyzed acetone.

3. Transfer the slurry to a graduated centrifuge tube and store it in a refrigerator. After 20 to 24 hours of extraction in the cold and dark, allow the centrifuge tube to return to room temperature and return the volume to the original level by adding 90 percent acetone.

4. Centrifuge the sample for 10 minutes and measure the absorbance of the supernatant at 630, 645, and 665 nm in a spectrophotometer.

5. Use the following formulas to determine the concentration of the three main chlorophyll types where D is the absorbance and C is the concentration of each chlorophyll type:

$$Ca = 11.6D_{665}\text{-}1.31D_{645}\text{-}0.14D_{630}$$
$$Cb = 20.7D_{645}\text{-}4.34D_{665}\text{-}4.42D_{630}$$
$$Cc = 55.0D_{630}\text{-}4.6D_{665}\text{-}16.3D_{645}$$

The concentration of each of the chlorophylls in mg/l in the acetone extract is converted to the amount present/m^2 using the following formula:

where: A = surface area of the core (in m^2)
v = volume (in L) of acetone (90 percent) used
l = path length (in cm) of cuvette

- **Benthic Macroalgae.** No laboratory procedures are required.

- **Avifauna.** No laboratory procedures are required.

- **Epibenthic Plankters.** Laboratory procedures for the epibenthic pump samples collected include receipt at the laboratory, logging the samples in to the laboratory tracking system, rescreening through a screen or set of screens smaller than the 253-μm screen used in the field, sorting, and identification of the animals. The order of processing for this series of analysis is:

    1. settled volume
    2. species occurrence
    3. density and standing stock

A. Species occurrence: Taxonomic identification is done with a dissecting scope and compound scope as needed.

1. Identify the organisms to species or the lowest practical taxonomic level. Count the anterior portion of animals unless otherwise specified.

2. Record the total number of each identified taxon on the appropriate form.

3. If organisms are removed for a voucher collection, record the number removed on the appropriate form.

4. When the entire sample, subsample, or major taxonomic group has been identified, put organisms back into the group vial. Fill the vials completely with 70 percent alcohol. Insert the

B. Settled volume: This measurement reflects total standing stock and is conducted on the entire sample prior to sample sorting.

1. Place the epibenthic plankters in water in a small graduated cylinder.

2. Allow the sample to settle for 30 minutes.

3. Read and record the settled volume.

C. Density and standing stock: These parameters require biomass weights to determine number and types of prey organisms per unit area of habitat.

1. Following identification of animals to species and life history stage, take the wet weight of each group individually.

2. Remove all body parts from the samples for biomass determination.

3. Transfer each group to be weighed to water. Draw off the excess water, and blot any remaining moisture with absorbent paper. Allow the sample to air dry for 30 seconds.

4. Transfer the blotted animals to a weigh boat, piece of Parafilm, or the pan of the analytical balance for weighing.

5. Record the weight on the appropriate form and return the animals to the appropriate vial.

6. Biomass measurements for individual species or lowest practical taxonomic category are summed to yield biomass measurements for the major taxonomic categories.

D. Sediment grain size:

A. Species occurrence:

Samples are screened through a 0.5 mm screen.

B. Density and standing stock:

Use the procedures outlined for epibenthic plankters.

C. Sediment grain size and TOC:

Use the laboratory methods outlined in Section C.1.1.5 for grain size. Total organic carbon will be determined using the PSEP modified method 9060 with I.R. (SW846 Volume C).

Gravel/cobble.

- **Benthic Macroalgae.** No laboratory procedures are required.
- **Avifauna.** No laboratory procedures are required.
- **Epibenthic Plankters.** Processing of samples follows the procedures outlined in the sandflat/mudflat section.
- **Benthic Infauna.** Processing of samples follows the procedures outlined in the sandflat/mudflat section.

Upland. No laboratory procedures are required.

Juvenile Salmonid Utilization Study. No laboratory procedures are required.

C.1.2.6 Data Formats

All electronic data will be reported in a format consistent with guidance contained in: *Instructions for Formatting of Digital Data - Sediment*

C.2.0 DATA ANALYSIS AND PERFORMANCE STANDARDS

C.2.1 Benthic Infauna

C.2.1.1 Analysis of Benthic Infauna

Figure C-6 shows the analytical approach for evaluating the benthic infauna data. The sampling involves collection of eight replicates at eight locations in each of the two habitat types (gravel/cobble and sandflat/mudflat), and at two reference locations. In each habitat, further stratification of sampling will be conducted to yield two strata with four locations each. Analyses are broken into primary factor and secondary factor analyses. If the gravel/cobble habitat does not develop enough interstitial sediment to yield an infauna community, then infauna sampling will not be conducted on this habitat type.

The primary factor analysis is the scheduled analysis. The secondary analysis is essentially a contingency analysis, if the primary analysis is deemed inappropriate or inconclusive (e.g., if the mitigation and reference locations are not directly comparable).

Primary analysis would be composed of analysis of location similarity (Principal Coordinate Analysis and Proportional Similarity) and meristic factors (total number of species, number of numerically dominant species, number of non-numerically dominant species, numerical abundance of all species, wet-weight biomass of all species). Statistical analysis will be conducted on the Principal Coordinate Analysis clusters and the meristic factors. No statistical treatment of the Proportional Similarity data are appropriate.

As stated above and indicated in Figure 5-2, analysis of secondary factors would be conducted only if the primary factor analysis is inappropriate. The secondary factor analysis would be based on analysis of feeding guilds for the assemblages, to draw conclusions as to the "normality" of

C.2.1.2 Primary Factor Analysis

C.2.1.2.1 Similarity

Benthic infaunal community structure analysis requires the comparison of location-by-location species abundances patterns. Unfortunately, no single clear-cut nor easy method exists for the interpretation of similarity data. A two-part approach utilizing both quantitative statistical and qualitative index data will be used.

The qualitative measurement of similarity will involve the use of a sample-size independent version of the Bray-Curtis Index, the Proportional Similarity Index. The analysis will be run on that matrix using a nearest-neighbor group-clustering algorithm. Results will be displayed as optimally rotated dendrograms. Proportional Similarity dendrograms, while relatively simple and easy to interpret, do not provide an unambiguous determination of the significance of clusters formed by the analysis. Although "boot-strap" methods exist for determining the significance of the branching pattern in a given data set, they are cumbersome and are nothing more than modified "Monte Carlo" modifications of the data. These methods do not use an underlying statistical distribution as an basis for interpretation (Nemec and Brinkhurst 1988; Burd et al. 1990).

Quantitative statistical analyses of the same data will be performed using ordination techniques (specifically, Principal Coordinate Analysis). Ordination analysis projects samples into a multi-dimensional (species) universe, then rotates the axis to maximize information content along a subset of new axes (Principal Axes). The projections of samples onto the new axes (Principal Coordinates) are calculated. Statistical analyses of these data can be done using the distribution of these points along these axes. This type of analysis has been used extensively in both basic scientific and regulatory ecological studies (Lie 1974; Bloom 1980, 1986; Hill and Gauch 1980; Santos and Bloom 1980; Feder 1988; Digby and Kempton 1987; Diaz 1989; Feder et al. 1989). However, ordination data

Proportional Similarity Index. The standard Bray-Curtis Index measures taxonomic proportional abundances between locations, but is dependent on total number of taxa sampled in each assemblage. Taxa not represented in both assemblages are excluded from the analysis.

The Proportional Similarity Index is derived from the standard Bray-Curtis index and is independent of the number of taxa in each sample; the total number of taxa collected from all the samples are considered in the calculations (Kohn and Riggs 1982). Over the range of total numbers of organisms collected, the Proportional Similarity Index provides more replicable and reliable indications of location-location faunal similarity among locations than does the standard Bray-Curtis index (Pielou 1975, 1979; Gallaher and Blake 1977; Abrams 1980; Bloom 1981; Kohn and Riggs 1982).

Principle Coordinate Analysis. Ordination analysis will be performed utilizing the species-abundance data. These data can then be displayed as a 3-D plot and the clusters identified or further analyzed by stability analyses (Bloom 1992).

A non-parametric, multivariate analysis will be performed on the transformed scores to answer the question: "Can one or more reference samples be distinguished statistically from a cluster of habitat samples in 3-dimensional ordination space?" The results of the Principal Coordinate Analysis will be used as the data set. The various samples will be classed into reference and habitat sample replicates. There must be five or more replicates in each group. A 95% confidence (3-dimensional) polygon will be calculated about the reference group. Then each habitat sample will be tested using a Mann-Whitney "U" test to determine whether the sample lies within the confidence limits. The distance from that sample to the center, and the nearest edge, of the polygon will be calculated (Bloom 1992).

C.2.1.2.2 Meristic Factors

Initially the samples will be examined on a location-by-location basis to assess differences between mitigation and reference locations. If analyses indicate that the replicate data from two or more locations may be legitimately pooled, they will be pooled and the parameters recalculated.

Statistical analysis may consist of parametric and non-parametric procedures, including analyses of variance using a standard statistical software package (STSC 1992). Statistical comparisons will be conducted between some or all of the locations. Either ANOVA or paired two-sample tests (t-tests or Mann-Whitney U-tests, as appropriate) will be performed, depending upon the determination of whether or not the data are not normally distributed or had substantial heterogeneity of variances.

Analysis of variance procedures are robust and not degraded by small deviations from statistical normality or homoscedasticity (Sokal and Rohlf 1981; Zar 1984). Nevertheless, prior to examination of the data with parametric statistics, the homoscedasticity of data will be tested. If necessary, the data may be logarithmically transformed and the homoscedasticity will be retested. If the data do not meet the assumptions inherent in the parametric statistical tests, non-parametric tests will be performed instead. The graphical presentation of ANOVA results will include location or sample means and 95% confidence intervals.

C.2.1.2.3 Ecological Analysis

The simple enumeration and quantitative description of the fauna of an area may provide insight as to whether or not the assemblage is normal, interactive, and productive. It cannot, however, give any definitive answers as to the ecological interactions occurring at the site. Nevertheless, examination of the collected species abundance data may be able to provide significant information within the framework of previous research. The attempt will be made to provide a synthesis of such data and a functional interpretation of the biological assemblages sampled at the site.

"functional" ecosystem. Most of the common infaunal taxa belong to known feeding guilds or to other ecologically functional groups. Ecological group analyses described previously examine such relevant changes in the biota.

Many unconsolidated sediment taxa collected are sufficiently well-known that either their specific ecological interactions are known or the basic interactions of the whole taxon can be inferred (MacGinitie and MacGinitie 1968; Morris et al. 1980). This is particularly true for intertidal or shallow subtidal taxa (Morris et al. 1980; Kozloff 1983). Within the mollusks, for example, the specific diets and trophic interactions of virtually all predatory gastropod and scaphopod mollusks from the region are known (Robertson 1963; Lloyd 1971; Spight et al. 1974; Abbot and Haderlie 1980; Shimek 1983a, 1983b, 1983c, 1984, 1989, 1990; Hickman and Lipps 1983). The trophic biology of other mollusks, such as aplacophorans, other gastropods, and bivalves, can be inferred with accuracy (Kohn 1983; Abbott and Haderlie 1980; Stanley 1968; Scheltema 1981; Scheltema et al. 1991).

Similarly, the basic feeding biology of many of the local polychaete annelid groups is sufficiently well-known to infer the ecological role for most of the collected taxa (Nichols 1975; Fauchald 1977; Fauchald and Jumars 1979). Arthropods have also been examined in detail, and much information is available (See, for example, Butler 1980; Garth and Abbott 1980; Hart 1982).

Many of the so-called "miscellaneous" taxa are also known sufficiently to determine their trophic or ecological roles (Austin and Hadfield 1980; McEuen 1986). For example, in the Puget Sound region all common sea-stars and their diets are well-understood (Mauzey et al. 1968; Birkeland 1974; Engstrom 1974; Lambert 1981). Thus, the general diet of any species of sea-star collected and its effect on the benthos can be inferred. Finally, the interactions between epifaunal and infaunal organisms are well-known for many of the common taxa (Birkeland 1974; Robilliard 1970; Morris et al. 1980).

C.2.2 Epibenthic Plankters

The analytical scheme will be identical to that presented in Figure 5-2 for benthic infauna, with the exception that analysis will focus on species used as prey by juvenile salmonids, a subset of the epibenthos.

All data to be evaluated with respect to performance-based standards will be presented in the form of performance curves which plot observed levels and statistical range, reference levels and statistical range, and minimum performance levels (y axis) against time (x axis) over the full course of the monitoring period, as outlined in *An Approach to Improving Decision Making in Wetland Restoration and Creation* (USEPA 1992).

C.2.3 Plant Assemblage and Coverage (Saltmarsh and Upland)

Field data will be tabulated and summarized, and compared with performance standards, as determined by sampling at a reference area. The comparison to performance standards will be a direct comparison of data and does not entail statistical analysis.

All data to be evaluated with respect to performance-based standards will be presented in the form of performance curves which plot observed levels and statistical range, reference levels and statistical range, and minimum performance levels (y axis) against time (x axis) over the full course of the monitoring period, as outlined in *An Approach to Improving Decision Making in Wetland Restoration and Creation* (USEPA 1992).

C.2.4 Avifauna

Observations of bird use will be tabulated and summarized.

C.2.5 Benthic Microalgae

Data will be tabulated and summarized.

C.2.6 Benthic Macroalgae

All data to be evaluated with respect to performance-based standards will be presented in the form of performance curves which plot observed levels and statistical range, reference levels and statistical range, and minimum performance levels (y axis) against time (x axis) over the full course of the monitoring period, as outlined in *An Approach to Improving Decision Making in Wetland Restoration and Creation* (USEPA 1992).

C.2.7 Juvenile Salmonid Utilization Study

Data will be summarized and tabulated. Appropriate conclusions regarding residence and habitat preference of juvenile salmonids will be presented.

REFERENCES

Abbot, D. P. and E. C. Haderlie 1980. Prosobranchia: marine snails. Pages 231-307 *in* Morris, R. H., D. P. Abbott, and E. C. Haderlie, editors. Intertidal invertebrates of California. Stanford University Press, Stanford. California.

Abrams, P. 1980. Some comments on measuring niche overlap. Ecology. 61:44-49.

Austin W. C. and M. G. Hadfield. 1980. Ophiuroidea: the brittle stars. Pages 146-159 *in* Morris, R. H., D. P. Abbott, and E. C. Haderlie, editors. Intertidal invertebrates of California. Stanford University Press, Stanford. California.

Birkeland, C. 1974. Interactions between a sea pen and seven of its predators. Ecological Monographs. 44:211-232.

Bloom, S. A. 1986. Reanalysis and recovery analysis of shell dredging in Lake Ponchatrain. Unpublished report to Taylor Biological, Inc., Panama City, Florida, for U. S. Army Corps of Engineers.

Bloom, S. A. 1980. Multivariate quantification of community recovery. Pages 141-151 *in* J. Cairns, Jr. editor. The recovery process in damaged ecosystems. Ann Arbor Science Publ. Ann Arbor, Michigan.

Bloom, S. A. 1981. Similarity indices in community studies: potential pitfalls. Marine Ecology Progress Series. 5: 125-128.

Bloom, S. A. 1992. Community analysis system. Version 4.2. ©S. A. Bloom. Ecological Data Consultants. Archer, Florida.

Burd, B. J., A. Nemec, and R. O. Brinkhurst. 1990. The development

Diaz, R. J. 1989. Pollution and tidal benthic communities of the James River estuary, Virginia. Hydrobiologica 180:195-211.

Digby, P. G. N., and R. A. Kempton. 1987. Multivariate analysis of Ecological Communities. Chapman and Hall, Inc., New York, New York. 206 p.

Duker, G., C. Whitmus, E.O. Salo, G.B. Grette, and W.M. Schuh. 1989. Distribution of Juvenile Salmonids in Commencement Bay, 1983. Final Report to the Port of Tacoma. Fisheries Research Institute, University of Washington. Seattle, Washington. 68 p.

Engstrom, N. A. 1974. Population dynamics and prey-predation relations of a dendrochirote holothurian, *Cucumaria lubrica*, and sea stars in the genus *Solaster*. Ph. D. Dis. University of Washington. Seattle, Washington. 144 p.

Fauchald, K. and P. Jumars. 1979. The diet of worms: a study of polychaete feeding guilds. Oceanography and Marine Biology Annual Review. 17:193-284.

Fauchald, K. 1977. The polychaete worms. Definitions and keys to the orders, families, and genera. Natural History Museum of Los Angeles County and the Allan Hancock Foundation. Science series 28:1-186.

Feder, H. M. 1988. Chukchi sea benthos. Alaska Outer Continental Shelf (OCS) Region. 1987 Arctic information transfer conference proceedings. U. S. Minerals Management Serv., pp. 181-189.

Feder, H. M., A. S. Naidu, M. J. Hameedi, S. C. Jewett, and W. R. Johnson. 1989. Chuckchi Sea continental shelf: Benthos - environmental interactions. Report for the Minerals Management Service. 313 p.

Gallaher, E. E., and N. J. Blake. 1977. On equivalent forms of

Garth, J.S. and D.P. Abbott 1980. Brachyura: The true crabs. Pages 594-630 *in* Morris, R. H., D.P. Abbott, and E.C. Haderlie. Intertidal invertebrates of California. Stanford University Press, Stanford, California.

Hart, J. F. L. 1982. Crabs and their relatives of British Columbia. Handbook no. 40. British Columbia Provincial Museum. Victoria, British Columbia. 267 pp.

Hickman, C.S. and J.H. Lipps. 1983. Foraminiferivory: selective ingestion of foraminifera and test alterations produced by the neogastropod *Olivella*. Journal of Foraminiferal Research. 13:108-114.

Hill, M. O. and H. G. Gauch. 1980. Detrended correspondence analysis, an improved ordination technique. Vegetatio. 56:31-46.

Kohn, A.J. 1983. Feeding biology of gastropods. Pages 1-63 *in* Wilbur, K.M., editor. The Mollusca. Volume 5, Physiology.

Kohn, A.J. and A.C. Riggs. 1982. Sample size dependence in measures of proportional similarity. Marine Ecology-Progress Series. 9:147-151.

Kozloff, E. N. 1983. Seashore Life of the Northern Pacific Coast. An illustrated guide to Northern California, Oregon, Washington, and British Columbia. University of Washington Press. Seattle, Washington. 370 p.

Lambert, P. 1981. The sea stars of British Columbia. British Columbia Provincial Museum. Handbook no. 39. Victoria, B.C. 153 p.

Lie, U. 1974. Distribution and structure of benthic assemblages in Puget Sound, Washington, U.S.A. Marine Biology. 26:203-223.

Mauzey, K.P., C. Birkeland, and P.K. Dayton. 1968. Feeding behavior of asteroids and escape responses of their prey in the Puget Sound region. Ecology. 49:603-619.

McEuen, F.S. 1986. The reproductive biology and development of twelve species of holothuroids from the San Juan Islands, Washington. Ph.D. Dis. The University of Alberta, Edmonton, Alberta, Canada. 286 pp.

Morris, R.H., D.P. Abbott and E.C. Haderlie. 1980. Intertidal invertebrates of California. Stanford University Press. Stanford, California. 690 p.

Nemec, A., and R. O. Brinkhurst. 1988. Using the bootstrap to assess statistical significance in the cluster analysis of species abundance data. Canadian Journal of Fisheries and Aquatic Sciences. 45:965-970.

Nichols, F.H. 1975. Dynamics and energetics of three deposit feeding benthic populations in Puget Sound, Washington. Ecological Monographs. 45:57-82.

Phinney, Duane E., Denny M. Miller, and Michael L. Dahlberg. 1967. Mass-marking young salmonids with fluorescent pigment. Transactions of the American Fisheries Society, vol. 96, p. 157-162.

Pielou, E. C. 1979. Interpretation of paleoecological similarity matrices. Paleobiology. 5:435-443.

Pielou, E. C. 1975. Ecological diversity. John Wiley & Sons. New York, New York.

Robertson. R. 1963. Wentletraps (Epitoniidae) feeding on sea anemones and corals. Proceedings of the Malacological Society of London. 35:51-63.

Scheltema, A. H., J. Buckland-Nicks, and F.-S. Chia. 1991. *Chaetoderma argenteum* Heath, a northeastern Pacific aplacophoran mollusk redescribed (Chaetodermomorpha: Chaetodermatidae). Veliger. 34:204-213.

Scheltema, A. H. 1981. Comparative morphology of the radulae and alimentary tracts in the Aplacophora. Malacologia. 20:361-383.

Shimek, R.L. 1989. Shell morphometrics and systematics: A revision of the slender, shallow-water *Cadulus* on the Northeastern Pacific (Scaphopoda: Gadilida). Veliger 32:233-246.

Shimek, R.L. 1984. The diets of Alaskan *Neptunea*. Veliger. 26:274-281.

Shimek, R.L. 1990. Diet and habitat utilization in a Northeastern Pacific Ocean scaphopod assemblage. American Malacological Bulletin. 7:147-169.

Shimek, R.L. 1983c. The biology of the Northeastern Pacific Turridae. III. The habitat and diet of *Kurtziella plumbea* (Hinds, 1843). Veliger. 26:10-17.

Shimek, R.L. 1983a. Biology of the Northeastern Pacific Turridae. I. *Ophiodermella.* Malacologia. 23: 281-312.

Shimek, R.L. 1983b. The biology of the Northeastern Pacific Turridae. II. *Oenopota.* J. Moll. Stud. 49: 146-163.

Sokal, R. R. and F. J. Rohlf. 1981. Biometry. W. H. Freeman and Company. New York, New York. 859 p.

Spight, T. C. Birkeland, and A. Lyons. 1974. Life histories of small and large murexes (Prosobranchia, Muricidae). Mar. Biol. 24: 229-242.

USEPA. 1992. An Approach to Improving Decision Making in Wetland Restoration and Creation (EPA/600/R-92/150).

USEPA. 1994. Instructions for Formatting of Digital Data - Sediment (Chemical, Benthic, Bioassay), Water Column and Shellfish Monitoring Data - Commencement Bay Nearshore/Tideflats Superfund Site (version of October 10, 1994).

Weinberg, J. R. 1984. Interactions between functional groups in soft-substrata: Do species differences matter? Journal of Experimental Marine Biology and Ecology. 80:11-28.

Zar, J. H. 1984. Biostatistical Analysis, 2d ed. Prentice-Hall, Inc. Englewood Cliffs, New Jersey. 718 p.

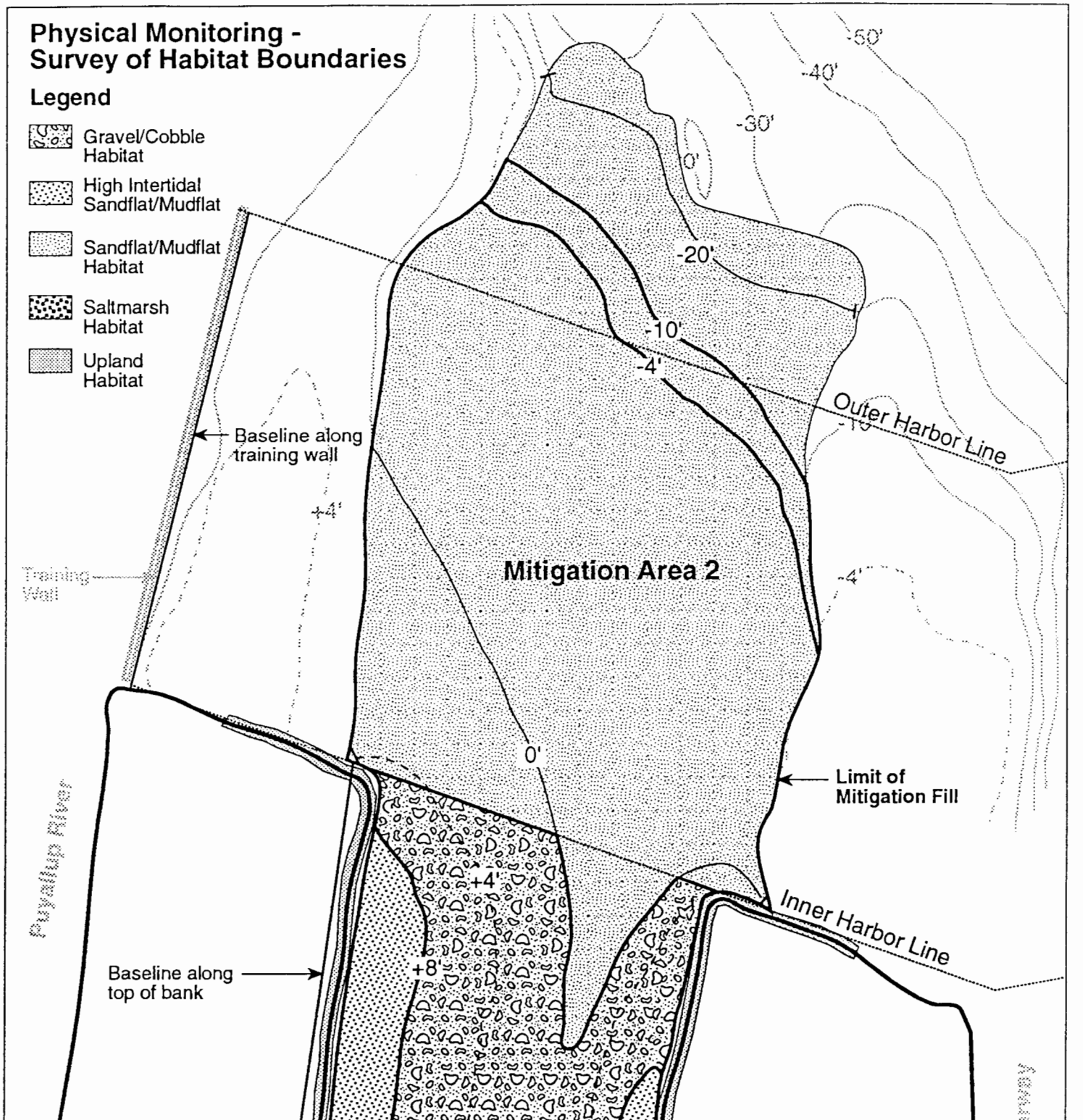
Physical Monitoring -
Survey of Habitat Boundaries
Legend
Gravel/Cobble Habitat
High Intertidal Sandflat/Mudflat
Sandflat/Mudflat Habitat
Saltmarsh Habitat
Upland Habitat
-50'
-40'
-30'
0'
-20'
-10'
-4'
Outer Harbor Line
Baseline along training wall
+4'
Training Wall
Mitigation Area 2
-4'
0'
Limit of Mitigation Fill
Puyallup River
+4'
Inner Harbor Line
Baseline along top of bank
+8'

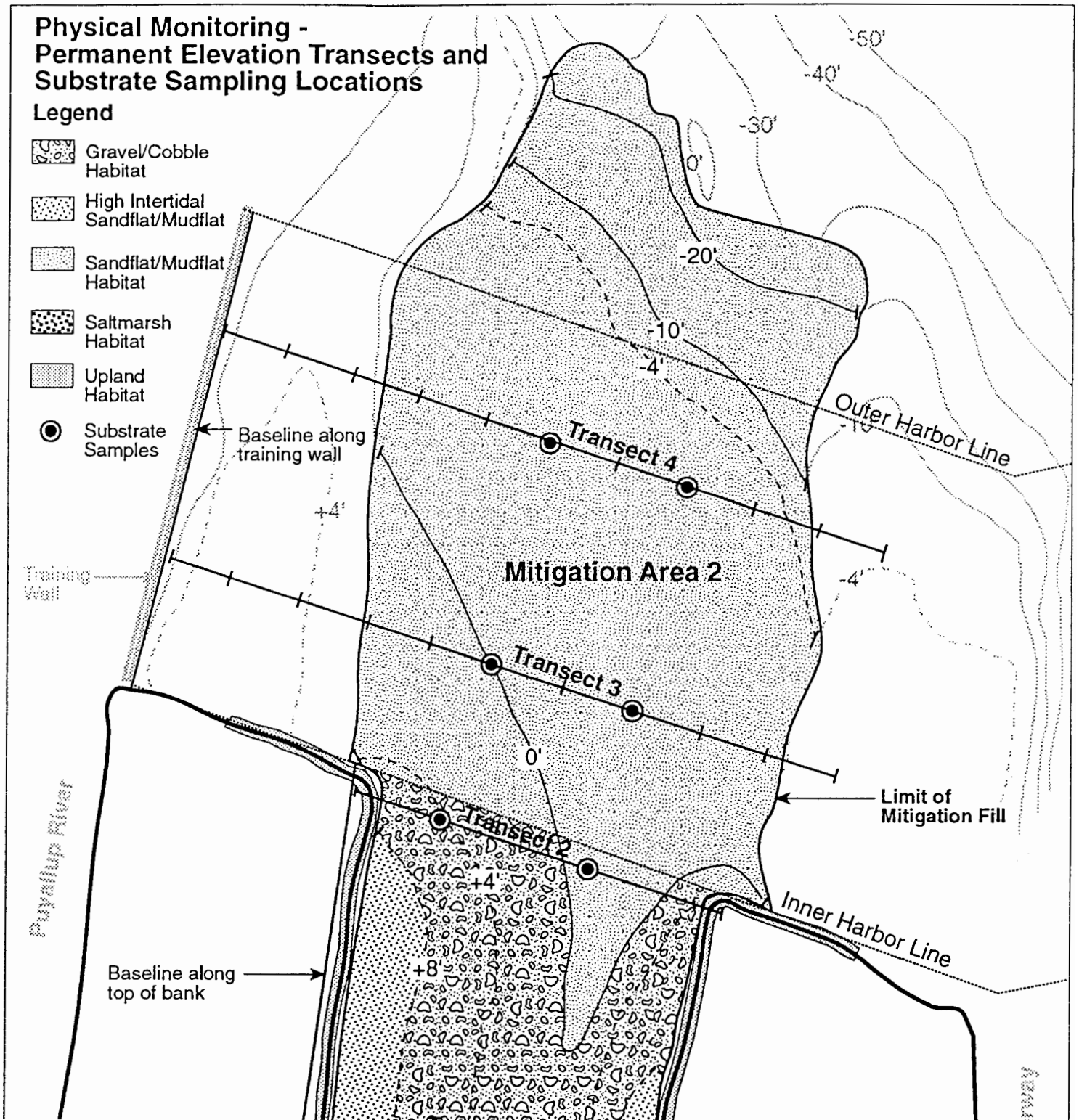
Physical Monitoring -
Permanent Elevation Transects and
Substrate Sampling Locations
Legend
Gravel/Cobble Habitat
High Intertidal Sandflat/Mudflat
Sandflat/Mudflat Habitat
Saltmarsh Habitat
Upland Habitat
Substrate Samples
Baseline along training wall
Baseline along top of bank
Transect 4
Transect 3
Transect 2
Mitigation Area 2
Outer Harbor Line
Inner Harbor Line
Limit of Mitigation Fill
Training Wall
Puyallup River
-50'
-40'
-30'
0'
-20'
-10'
-4'
+4'
+8'

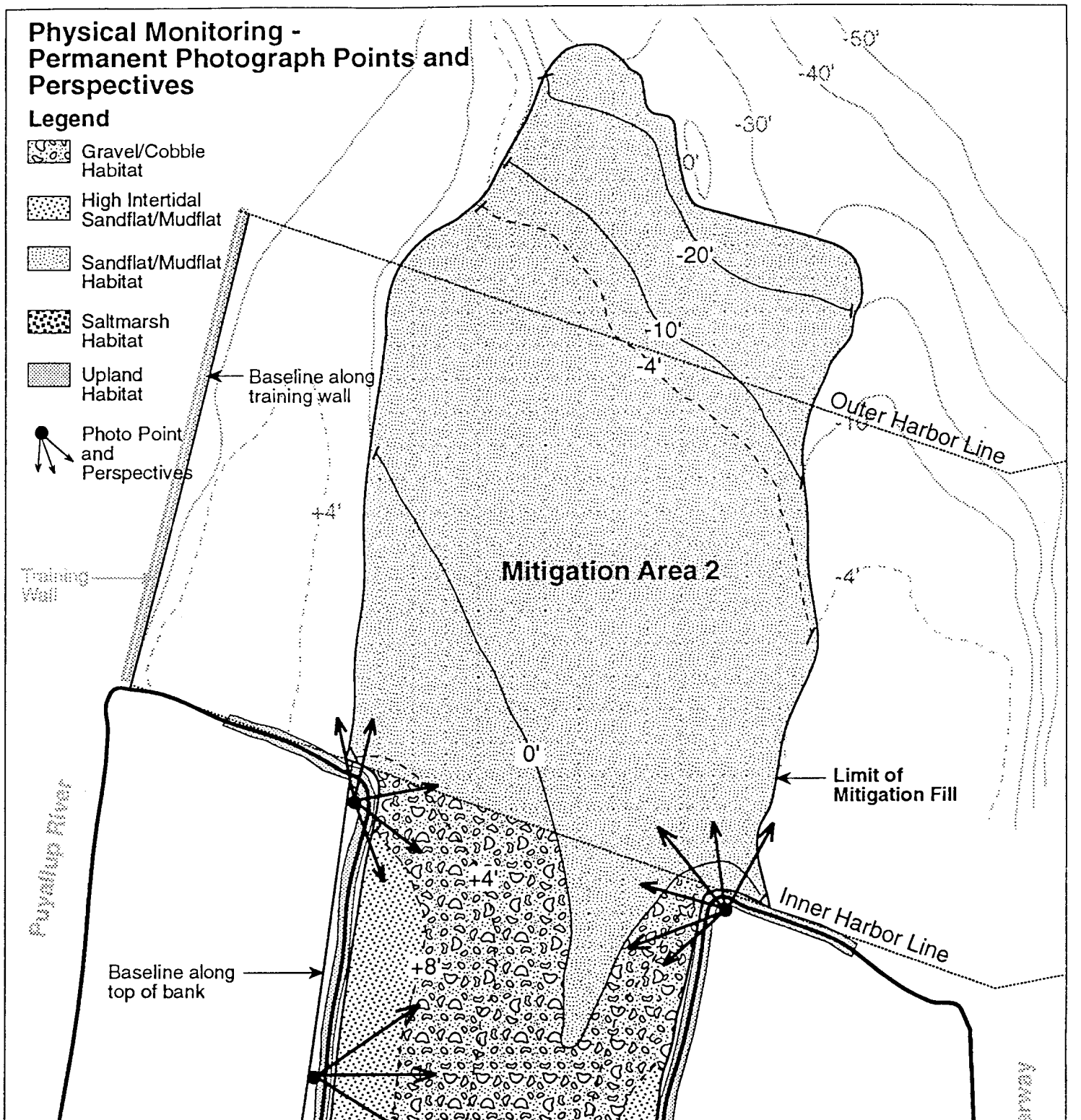
Physical Monitoring -
Permanent Photograph Points and Perspectives
Legend
Gravel/Cobble Habitat
High Intertidal Sandflat/Mudflat
Sandflat/Mudflat Habitat
Saltmarsh Habitat
Upland Habitat
Photo Point and Perspectives
Baseline along training wall
Outer Harbor Line
Training wall
Mitigation Area 2
Limit of Mitigation Fill
Puyallup River
Inner Harbor Line
Baseline along top of bank
-50'
-40'
-30'
-20'
-10'
-4'
0'
+4'
+8'

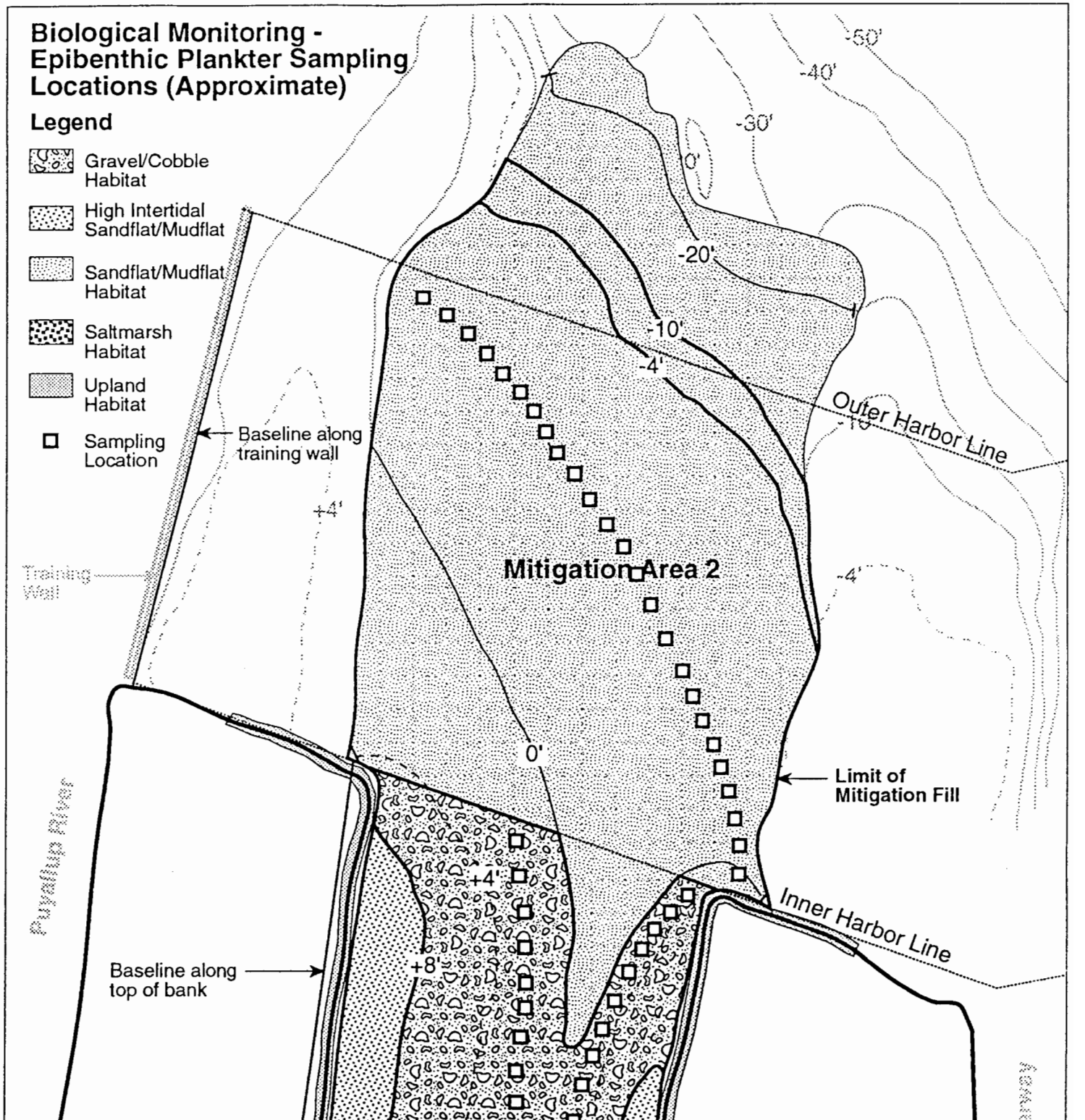
Biological Monitoring -
Epibenthic Plankter Sampling
Locations (Approximate)
Legend
Gravel/Cobble Habitat
High Intertidal Sandflat/Mudflat
Sandflat/Mudflat Habitat
Saltmarsh Habitat
Upland Habitat
Sampling Location
Baseline along training wall
Training Wall
Baseline along top of bank
Puyallup River
Mitigation Area 2
Limit of Mitigation Fill
Outer Harbor Line
Inner Harbor Line
-50'
-40'
-30'
0'
-20'
-10'
-4'
+4'
+8'

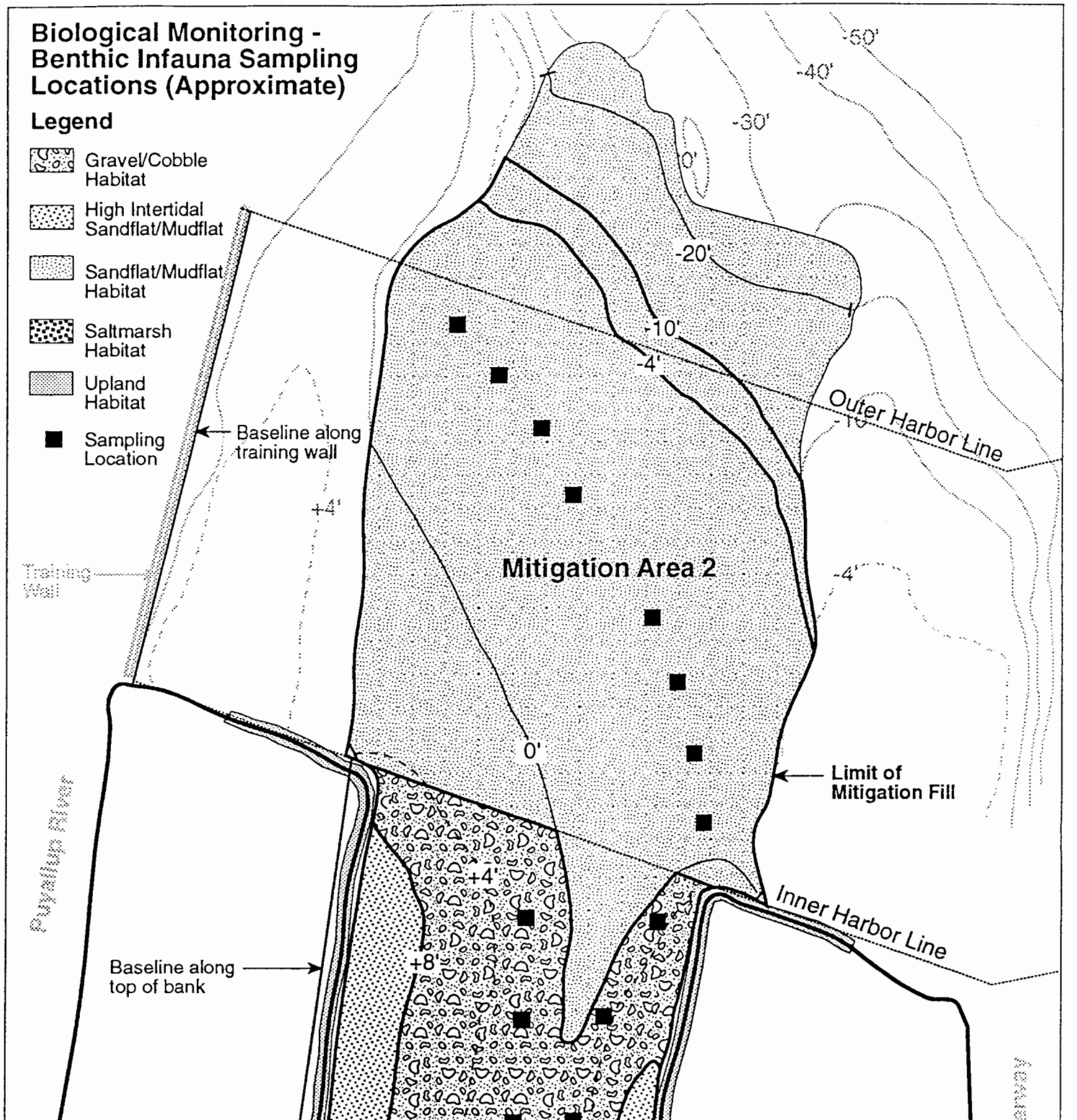
Biological Monitoring -
Benthic Infauna Sampling
Locations (Approximate)
Legend
Gravel/Cobble Habitat
High Intertidal Sandflat/Mudflat
Sandflat/Mudflat Habitat
Saltmarsh Habitat
Upland Habitat
Sampling Location
Baseline along training wall
Baseline along top of bank
Training Wall
Puyallup River
Mitigation Area 2
Outer Harbor Line
Inner Harbor Line
Limit of Mitigation Fill
-50'
-40'
-30'
-20'
-10'
-4'
0'
+4'
+8'

Port of Tacoma
February 6, 1995

FLOW CHART OF ANALYSIS OF BENTHIC INFAUNA AND EPIBENTHIC PLANKTER DATA

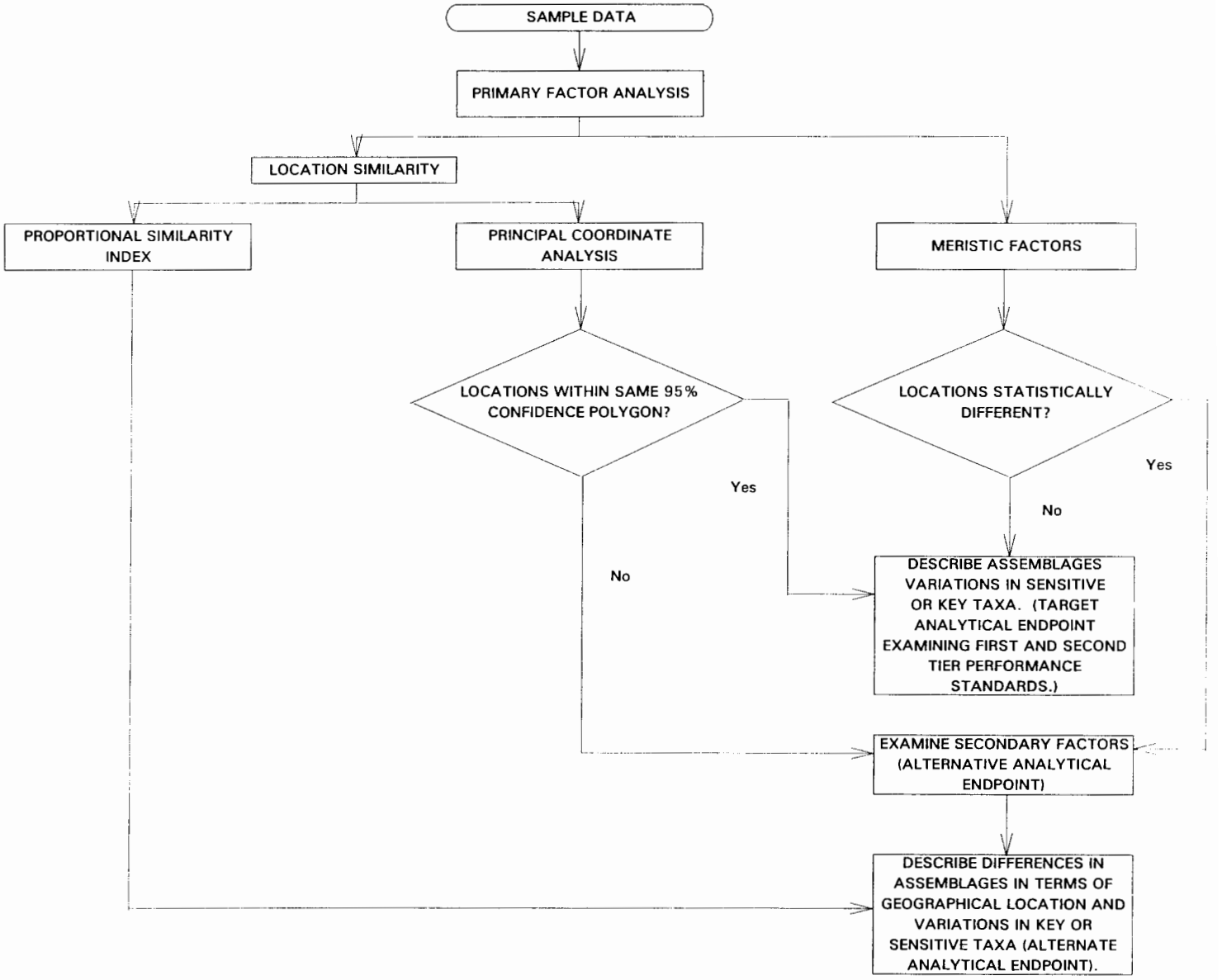

Port of Tacoma
February 6, 1995

ATTACHMENT C-1
QUALITY ASSURANCE PROJECT PLAN FOR HABITAT/MITIGATION MONITORING SITCUM WATERWAY REMEDIATION PROJECT

ATTACHMENT C-1
QUALITY ASSURANCE PROJECT PLAN FOR HABITAT/MITIGATION MONITORING SITCUM WATERWAY REMEDIATION PROJECT

INTRODUCTION

The purpose of this quality assurance plan is to describe the responsibilities and procedures proposed to ensure that data collected as part of the habitat/mitigation monitoring effort is suitable for the Port's needs.

This QAPP covers sampling and analysis of data collected at all the habitat/mitigation areas.

Parametrix will perform field activities for the habitat/monitoring program. Laboratory analysis will be conducted both at Parametrix and subcontractors laboratories.

PROJECT ORGANIZATION AND RESPONSIBILITY

Project organization of individuals responsible for quality assurance (QA) are shown on Figure C-1-1. Responsibilities of these individuals are summarized as follows:

Personnel Responsible for Quality Assurance Activities

Personnel	Responsibilities
EPA Project Manager	Oversee project performance to ensure compliance with Consent Decree. Act as liaison between Port and the agencies.
Port of Tacoma Project Manager	Oversee project team performance to ensure contract compliance. Coordinate Parametrix activities to implement required work.
Parametrix Project Manager	Oversee project team performance to ensure contract compliance. Implement necessary

Parametrix Project QA Coordinator	Provide technical QA assistance. Arrange contract or other external procurement packages for QA needs. Coordinate corrective actions. Oversee all contractor QA activities to ensure compliance with contract specifications. Direct implementation of QA contractor plan. Prepare and submit QA project reports to management.
Parametrix Analytical QA Officer	Ensure data quality, data validation, and QA information are complete and are reported in the required deliveries format as required from the analytical laboratory. Write QA reports and inform project QA coordinator when problem occurs.
Parametrix Project Field QA Office	Ensure that sample collection, preservation, storage, transport, and chain of custody quality control procedures are followed; inform Project QA Coordinator when problems occur, and communicate and document corrective actions taken.
Biological Laboratory Project Manager	Ensure that physical testing procedures are performed as required; oversee laboratory performance to ensure compliance with protocols; proper storage, transport, chain of custody, and quality control procedures are followed. Inform Project QA Coordinator when problems occur, and communicate and document corrective actions taken.

FIELD QUALITY ASSURANCE PROCEDURES

Benthic Infauna Sampling

Sample Acceptability Criteria for Hand-operated Corer

- Minimal or no water is present within the sample core. This would be detectable by visual loss of sample material from around the sample retention plate.

- No loss of sample material occurs during the transfer of a completed core sample to the screen or sample container.

If the sample does not meet all of these criteria, the sample is not accepted. A new sample will then be collected at that location.

Epibenthic Sampling

Sample Acceptability Criteria for Epibenthic Suction Pump

The sampler is deployed by holding it at arms length to avoid disturbing the area to be sampled. The sampler is lowered gently to the surface of the substrate to avoid disturbing surface sediments and organisms. The following acceptability criteria must be met:

- The sample must be collected on an ebbing or slack low tide.

- The minimum acceptable pumping time is 15 seconds.

- Water depth at the time of sampling must be at least 1 ft and less than 4.5 ft.

If the sample does not meet all of these criteria, the sample is not accepted. A new sample will then be collected at that location.

Field Chain of Custody Procedures

A label with the number identical to that on the Qualitative Sample Characteristics form (Figure C-1-2) is attached to the outside of the sample container with a continuous wrap of clear tape around the container. In addition to an external label, a second waterproof label with an identical number is placed inside the sample containers.

from damage. The samples and COC form are placed in a secure container which is sealed by placing a signed and dated Chain-of-custody Seal across the opening (Figure C-1-4).

At the end of each day, all data and log forms are reviewed by the person recording data who corrects any errors or omissions at this time. All data sheets are removed daily from the field clipboard, photocopied, and the original data sheets filed in a fireproof file cabinet.

If someone other than the sample collector transports samples to the laboratory, the collector signs and dates the COC form and inserts the name of the person or firm transporting the samples under "transported by" before sealing the container with a Custody Seal.

LABORATORY QUALITY ASSURANCE PROCEDURES

Benthic Infauna and Epibenthic Laboratory Analysis

Laboratory analyses are performed in the Parametrix laboratory and by subcontractors. Parametrix will notify EPA of the taxonomists proposed for the project, prior to sending samples out to subcontractors.

Standard laboratory procedures used for sample processing are:

- Writing is done with a permanent ink pen (for example, Sharpie marker) unless otherwise indicated.
- Errors or corrections are crossed out with one or two horizontal lines, dated, and initialed.
- Weekly updated photocopies of all forms are kept in a fireproof cabinet; all completed original forms are retained, and, if requested, copies will be distributed to clients.
- Screens are kept over sink drains when samples are screened or otherwise handled.

then signed with the date and time. If the seal on the shipping container is broken, samples are not accepted.

Log-in procedures begin with a check of the general sample condition. Samples are logged in on a Field Sample Check-in Log (Figure C-1-5). Logging in of samples and recording of field data are completed within 24 hours of receipt.

Exterior labels on larger vials and jars are white, self-adhesive labels. Internal labels are waterproof or 100 percent rag paper. The sample ID, job name, job number and number of containers are printed in pencil on the internal label.

The Benthic Sorter Tracking Log, the Sorter Count Sheet, the Benthic Sample Tracking Log — Sediment Portion, and the Benthic Sample Tracking Log — Sorted Animal Portion (Figures C-1-6 through C-1-9) are filled out as appropriate during the sorting process. All blank spaces must be filled in. The location and status of samples can be determined by looking at these forms.

Sorting and Taxonomy Quality Control

Sorting Quality Control (QC)

Twenty percent of each sample is reexamined by an independent sorter. All organisms found are verified by a taxonomist to assure that they are countable parts. Ninety-five percent initial recovery is considered satisfactory (for example, one found in QC check to 100 total in the 20 percent sample portion, or two found to 200, etc). Numbers of additional organisms not extracted by the initial sorter are recorded separately on the Sediment QC Sheet (Figure C-1-10). The recovered organisms are added to the initial organisms sorted.

If 95 percent of the organisms were not removed during the initial sorting, the sample must be resorted.

Additionally, all vials of sorted animals are checked to verify the correct

Sheets (Figure C-1-12). These sheets are returned to Parametrix upon completion of sample identification for data entry.

Five percent of all samples identified by one taxonomist are reidentified by another taxonomist who is also qualified to identify organisms in that major taxonomic group. This is to ensure that identifications are correct and consistent. When a taxonomic error or inconsistency is found, it is necessary to trace all of the work of the taxonomist responsible for the error, to identify those samples into which the specific error or inconsistency may have been introduced. Those samples will all go through the 5 percent check to ensure that the errors are not systematic.

Reference Collection

The verified specimens that are returned by the outside taxonomic experts will be placed in a permanent reference collection. Once a species has been verified, that species will not require additional expert verification.

The reference collection will include all verified specimens held in labeled vials and categorized by species and sample. Label information will be complete, including the survey, sampling locations, verification expert, date of verification, and other pertinent information.

All vials of a given species will be held in a single jar filled with alcohol (95 percent) and sealed with plastic tape. This jar will be labeled with the species name or taxonomic designation on the outside and internally.

Reference specimens will be archived alphabetically within major taxonomic groups.

Data Recording, Reduction, and Storage

This section outlines database management procedures. The primary purpose of the procedures is to ensure the optimal possible integrity of the final data product. These procedures are also designed to document any changes or edits to the data and the reason for making them. The steps used to ensure data integrity include: 1) a careful screening of the data

Original Data Forms

The original field data forms, lab data forms, and the field logs are archived in a fireproof file cabinet located at the Parametrix Kirkland, Washington office.

Standardized forms are used to ensure orderly data collection and recording. The following forms are used for this project:

- Qualitative Sample Characteristics (Figure C-1-2)
- Biological Field Sample Custody (Figure C-1-3)
- Chain of Custody Seal (Figure C-1-4)
- Field Sample Check-in Log (Figure C-1-5)
- Benthic Sorter Tracking Log (Figure C-1-6)
- Sorter Count Sheet (Figure C-1-7)
- Benthic Sample Tracking Log-Sediment Portion (Figure C-1-8)
- Benthic Sample Tracking Log-Sorted Animal Portion (Figure C-1-9)
- Sediment QC Sheet (Figure C-1-10)
- Vial QA/QC Record (Figure C-1-11)
- Taxonomist Count Sheet (Figure C-1-12)

Pre-Entry Data Screening

The working copy of the original data form is reviewed by the field crew leader or trained member of the field crew to ensure that correct field entry procedures were used. Any problems with the data forms noted at this point are corrected directly on the working copy. The reasons for making any changes, if not evident, are written on the form. Errors are lined out and the correction is written next to the error or in the margin. The person conducting the error inspection then dates and initials each page that is checked. In cases where the entire page of data is coded incorrectly, the data are transcribed onto a new data form. The word "transcribed" and the inspector's initials are placed at the top of each page.

Electronic Entry

- **Validation**. As entered data are received from the computer operator, a hard copy is produced. A one hundred percent verification of the hard copy of the entered data is performed by comparing this hard copy to the correction copy of the original field data form.

- **Database Correction**. A record is maintained of all errors identified during entry verification. For each correction the original value, the corrected value, the reason for the change, the date recorded, and the initials of the inspector are recorded on the hard copy of the data.

- **Incorporation of Corrections into the Database**. All entry errors are corrected in the corresponding data file. As a precaution, a backup file of the data are made before the edits are entered.

All edits to the electronic data file are confirmed by creating a hard copy of the edited data file. This edited hard copy is retained, then compared with the original hard copy to verify that the edits were entered accurately.

Data Diagnostics. After the data have been verified and the data file updated, screening of the data begins. Various checks for internal consistency and plausibility of the data are executed.

- **Check Fields**. If several field sampling programs share the same field data entry form, there may be data fields on the form that are undefined for some of the sampling programs. As a quality control check, all such fields are identified and examined to ensure that they were not incorrectly used for the wrong field sampling program.

  All functionally related fields within the data file are identified and the functional relationships checked for internal consistency.

- **Verify Flagged Entries**. Any potential discrepancies are resolved by referring to the field logs, field personnel, or the Project Manager as necessary.

- **Incorporate Corrections**. Any identified corrections are incorporated

QA/QC Records

The following items produced by the data entry QA/QC procedures are archived in a fireproof file located at the office:

- The original data form and the corrected copy, and
- The final, edited version of the electronic data file.

Database Corrections Performed During Data Reduction

Errors in the database determined during data reduction are transferred to the electronic database. Updated copies of the electronic database file are archived as they are produced. These corrections are then available for incorporation into the final reduced database.

Data Storage

The Project Manager is responsible for storing the originals of field records as part of the permanent records. Data stored on magnetic media (e.g., floppy disks, hard disks) as well as a hard copy and appropriate documentation are also to be filed as permanent records. Electronic data will be formatted consistent with the guidelines in *Instructions for Formatting of Digital Data - Sediment (Chemical, Benthic, Bioassay), Water Column and Shellfish Monitoring Data - Commencement Bay Nearshore/Tideflats Superfund Site* (USEPA 1994).

Quality Assurance Program Organization Chart

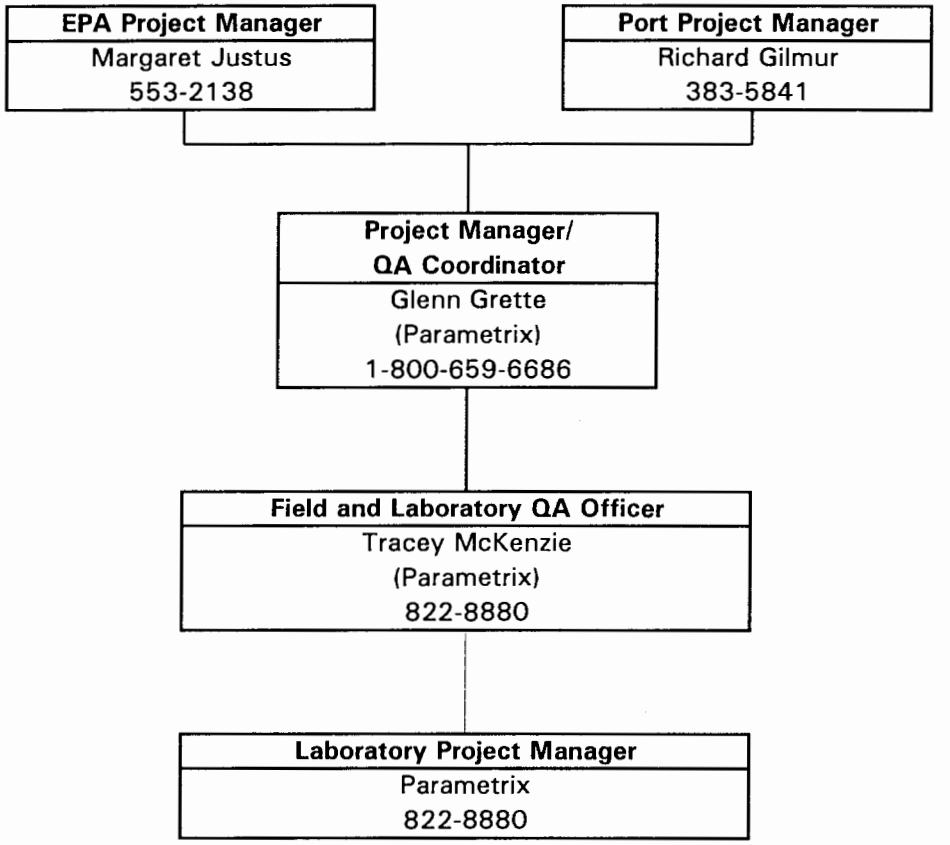

Qualitative Sample Characteristics

Sample ID _____

Type of Sample _____

# of Containers _____

Page ___ of ___

Photograph: Roll_____ Exp_____

Grain Vol. (ml) ☐☐

Date (mmddyy)	Location	Station	Elevation +/-	Elevation Feet	Depth	Rep	Time	Gear	Initials	Sample Type

Surficial sediment characteristics: (circle most descriptive)

Texture Smooth Coarse Clay Silt Sand Gravel Cobble

Color Light Dark Brown Other _____

Odor Normal Sewage Petroleum Chemical None Other _____

Presence of:	Yes/No	Percent	Describe Type
Biological structures			
Debris			
Oily sheen			

Vertical profile characteristics:	Describe
Changes in sediment characteristics	
Presence and depth of redox potential discontinuity layer (rpd)	
Penetration depth	

Sample quality comments:	Describe
Leakage	
Winnowing	
Disturbance	

BIOLOGICAL FIELD SAMPLE CUSTODY

Project Name _____ Project Number _____

Sample Type _____ Page ____ of ____ Date _____

Samplers _____ Recorder _____

Station Number	# Jars	Sample Time	Comments

in of Custody

Parametrix, Inc.

FIELD SAMPLE CHECK-IN LOG

PROJECT NAME ____________________ PROJECT NUMBER ____________________

SAMPLE TYPE ______________ BY ______________________________ PAGE ________ OF _____

STA #	REP.	SAMPLE DATE	DEPTH	SIEVE SIZE	# OF JARS	JAR SIZE	DEL. TO LAB	TIME	RESCREENED			SAMPLE SPLIT (Y/N)	ARCHIVED	
									DATE	INITIALS	TIME		(Y/N)	TIME

IG LOG

Project Number:

Page of

SIEVE SIZE	# SIZE OF JARS	VOL.	SEDIMENT TYPE	SORTER	TOTAL TIME	TAXON-# OF ORGANISMS ANNE.	MOLL.	CRUS.	MISC.	QC (P/F)	COMMENTS
			QC								
			RESORT								
			TOTAL								
			QC								
			RESORT								
			TOTAL								
			QC								
			RESORT								
			TOTAL								
			QC								
			RESORT								
			TOTAL								
			QC								
			RESORT								
			TOTAL								
			QC								
			RESORT								
			TOTAL								
			QC								
			RESORT								
			TOTAL								
			QC								
			RESORT								
			TOTAL								
			QC								
			RESORT								
			TOTAL								
			QC								
			REBORT								
			TOTAL								

SORTER COUNT SHEET

PROJECT NAME ____________________ PROJECT NUMBER ____________________

STATION ____________ REP ________ SORTER ____________________

COUNTS							
ANNELIDS	MOLLUSCS	CRUSTACEA	MISC.		DATE	HOURS	COMMENTS

LE TRACKING LOG - SEDIMENT PORTION, PART ONE

Project Number:

SAMPLE	# / SIZE	SORTER	TAXA - CHECK IF PRESENT				SORT COMPLETE		QC'D			RESORT	
DATE	OF JARS	INIT.	ANNE.	MOLL.	CRUB.	MISC.	INIT.	DATE	INIT.	DATE	P/F	INIT.	DATE

TRACKING LOG - SORTED ANIMAL PORTION

Project Number: Page of

	VIAL QC		BIOMASS		TO TAXONOMIST		FROM TAXONOMIST		VCHR.	ARCHIVED		ARC. TO CLIENT	
XON	INIT.	DATE	INIT.	DATE	INIT.	DATE	INIT.	DATE	Y/N	INITIALS	DATE	INIT.	DATE
NE.													
LL.													
US.													
SC.													
NE.													
LL.													
US.													
SC.													
NE.													
LL.													
US.													
SC.													
NE.													
LL.													
US.													
SC.													
NE.													
LL.													
US.													
SC.													
NE.													
LL.													
UB.													
SC.													
NE.													
LL.													
US.													
SC.													
NE.													
LL.													
US.													
SC.													
NE.													
LL.													
US.													
SC.													
NNE.													
OLL.													
RUS.													
ISC.													

SEDIMENT QC SHEET

PROJECT NAME: ____________________

PROJECT NUMBER: _____________

PERFORMED BY: ____________________

		SORTED	VOL	ORIG #	# ORGS	# OF ORGANISMS FOUND					ORIG	DATE	
STA	REP	SED VOL	QC'D	ORGS	ALLOWED	ANNE.	MOLL.	CRUS.	MISC.	P/F	SORTE	QC'D	TIME

IA/QC RECORD

ROJECT NAME _____ PROJECT NUMBER _____

A/QC BY _____ PAGE _____ OF _____

DATE OMPLETE	STA.	REP.	SORTER	VIAL QC TIME	INCORRECT TAXA TAXA	ANNELIDS NUMBER	MOLLUSCS NUMBER	ARTHROP. NUMBER	ECHINO. NUMBER	MISC. NUMBER	COMMENTS
					ANNELIDS						
					MOLLUSCS						
					ARTHROPODS						
					ECHINODERMS						
					MISCELLANEOUS						
					ANNELIDS						
					MOLLUSCS						
					ARTHROPODS						
					ECHINODERMS						
					MISCELLANEOUS						
					ANNELIDS						
					MOLLUSCS						
					ARTHROPODS						
					ECHINODERMS						
					MISCELLANEOUS						
					ANNELIDS						
					MOLLUSCS						
					ARTHROPODS						
					ECHINODERMS						
					MISCELLANEOUS						
					ANNELIDS						
					MOLLUSCS						
					ARTHROPODS						
					ECHINODERMS						
					MISCELLANEOUS						
					ANNELIDS						
					MOLLUSCS						
					ARTHROPODS						
					ECHINODERMS						
					MISCELLANEOUS						
					ANNELIDS						

TAXONOMIST COUNT SHEETS

OJECT NAME ______________ PROJECT NUMBER ______________ SAMPLING DATE ______________

TAXONOMIST ______________ DATE ______________ PAGE _____ OF _____

STATION # ______________ REPLICATE _______ DEPTH ______________

MAJOR TAXON ______________

TAXON	NODC CODE	COUNT	TO REF. COLLECTION	COMMENTS

Port of Tacoma
February 6, 1995

ATTACHMENT C-2
HEALTH AND SAFETY PLAN FOR
HABITAT/MITIGATION MONITORING
SITCUM WATERWAY REMEDIATION PROJECT

ATTACHMENT C-2
HEALTH AND SAFETY PLAN FOR HABITAT/MITIGATION MONITORING
SITCUM WATERWAY REMEDIATION PROJECT

Introduction

The project team will conduct sampling for the habitat/mitigation monitoring program for the Sitcum Waterway Remediation Project. Major hazards are of physical nature in the form of vessel traffic, machinery, and containers; and those associated with sample collection and analysis activities such as diving and deployment of sampling equipment.

The requirements of this Health and Safety Plan address the hazards and appropriate hazard controls or protective measures and apply to Parametrix personnel, subcontractors, and others present or involved in sample collection and handling activities.

Assignment of Responsibilities

Parametrix will be responsible for all monitoring activities.

Parametrix Corporate Health and Safety Manager

- Coordinate with contractors;
- Agency liaison on matters of health and safety;
- Address matters of corporate health and safety policy;
- Secondary contact in case of illness or injury; and
- Review project Health and Safety Plan.

Parametrix Project Health and Safety Manager, Glenn B. Grette

- Coordinate with contractors;
- Develop project Health and Safety Plan;
- Communicate health and safety requirements to involved individuals;
- Consult with Corporate Health and Safety Manager as new site conditions arise; and
- Primary contact in case of illness or injury

Parametrix Laboratory Manager

- Ensure that all laboratory employees have been trained in safe laboratory procedures;
- Ensure that laboratory employees read the Material Safety Data Sheets (MSDS) or toxicological briefs for chemicals that they may be exposed to; and
- Post instructions in a prominent location for proper disposal of the most commonly used chemicals.

Hazard Evaluation and Control Measures

Contact with Potentially Contaminated Sediments

Sampling and surveying will be conducted at the habitat/mitigation areas at the mouth of the Milwaukee Waterway. This area will be constructed of dredge material that originates from Blair Waterway. The material comprising the surface of the habitat/mitigation is expected to be essentially free of chemical contamination. However, chemical contamination has been detected in sediments from portions of Blair Waterway. Further, Milwaukee Waterway is located within the boundaries of the Commencement Bay Nearshore/Tideflats Superfund Site. For these reasons, the Port of Tacoma will require workers, that could potentially be exposed to sediments at the mitigation site, to follow the control and protection procedure outlined in this manual.

The following discussion of potential chemicals of concern pertains specifically to chemicals that have been detected in sediment samples from Sitcum Waterway. Many of the same chemicals have been detected in Blair Waterway. Therefore, the information presented is pertinent to potential exposure to contaminated sediments from Blair Waterway.

Potential Site Chemicals of Concern

Health and safety practices established for the Sitcum Waterway Remediation Project will be continued for the OMMP activities. Sampling and sample handling activities may result in limited exposure to potentially

relatively significant acute and/or chronic exposures, and is not meant to indicate that such effects might occur from the planned site activities. In general, the sediment samples are expected to contain chemicals of limited volatility at concentrations which are not expected to produce significant exposures. The types of planned work activities should also limit potential exposures at this site. Furthermore, appropriate protective equipment and monitoring will be used as discussed below to further minimize any exposures which might occur.

As a point of reference, standards for occupational exposures to these chemicals are included as available. As noted above, site exposures are generally expected to be well below the level of any of these exposure limits. These standards are presented using the terminology defined by the Washington State General Occupational Health Standards (Chapter 296-62 WAC, Part H) as follows:

PEL Permissible exposure limit.

TWA Time-weighted average exposure limit for any 8-hour work shift of a 40-hour work week.

STEL Short-term exposure limit expressed as a 15-minute time-weighted average and not to be exceeded at any time during a work day.

CEL Ceiling exposure limit not to be exceeded at any time during a work day.

PAHs Health Effects. PAH exposure can occur via inhalation of vapors, ingestion, and skin and eye contact. Skin contact can result in reddening or corrosion. Ingestion can cause nausea, vomiting, lowering of blood pressure, abdominal pain, convulsions, and coma. Damage to the central nervous system can also occur. The U.S. Department of Health and Human Services has classified 15 PAH compounds as having sufficient evidence for carcinogenicity, while the EPA has classified at least 5 PAHs as human carcinogens. There are no currently assigned PEL-TWA for PAHs, but the closely related material coal tar is regulated as coal tar pitch volatiles with a PEL-TWA of 0.2 milligrams per cubic meter (mg/m^3).

arsenic trioxide or pentoxide. Trivalent arsenic interacts with a number of sulfhydryl proteins and enzymes, altering their normal biological function. Ingestion of arsenic can result in fever, anorexia, cardiac abnormalities, and neurological damage. Liver injury can accompany chronic exposure. Skin and inhalation exposure to arsenic has been associated with cancer in humans, particularly among workers in the arsenical-pesticide industry or copper smelters. Arsine is a highly toxic gaseous arsenical, causing nausea, vomiting, and hemolysis. The current PEL-TWA for organic and inorganic forms of arsenic is 0.2 mg/m^3. The PEL-TWA for inorganic arsenic under WAC 296-62-07347 is 0.01 mg/m^3. Arsenic is also regulated as a carcinogen under WAC 296-62-07347.

Inorganic Lead Health Effects. Inorganic lead and its compounds (excluding lead arsenate) can cause a disease known as lead poisoning. This disease is hard to diagnose, but may include symptoms of decreased physical fitness, fatigue, sleep disturbances, headaches, aching bones and muscle, digestive symptoms (constipation), abdominal pains, and decreased appetite. These symptoms are reversible and complete recovery is possible.

Severe exposure could lead to anemia, pallor, a "lead-line" on the gums, and decreased hand-grip strength. Nerve damage may occur, with symptoms such as "wrist-drop." These symptoms may be irreversible. Further damage can occur to the nervous system and the kidneys. The PEL-TWA for lead is 0.05 mg/m^3.

Copper Health Effects. Copper exposure can occur via inhalation of dust or fume, ingestion, or skin and eye contact. Copper salts can act as skin irritants, causing itching and dermatitis. Eye contact can result in severe damage, including corneal damage. Metallic copper can result in skin thickening, but is not associated with dermatitis in industrial settings. Copper dusts can irritate the respiratory tract. Ingestion can result in irritation, but industrial exposure seldom results in damage because copper salts normally induce vomiting. Extensive exposure can damage the lungs, kidneys, skin, and liver. The current PEL-TWA for copper as dust and mists is 1.0 mg/m^3.

Zinc Health Effects. Zinc can be hazardous by inhalation of dust and fumes, ingestion, and skin and eye contact. Solid zinc chloride is corrosive to skin and mucous membranes, and sensitization can occur resulting in dermatitis. Eye contact can produce inflammation and corneal ulceration. Ingestion can result in corrosive damage to the digestive tract. The current PEL-TWA for exposure to zinc chloride fume is 1 mg/m^3.

Mercury Health Effects. The health effects of mercury exposure are dependent on the form. Elemental mercury is toxic by inhalation, skin absorption, eye, and skin contact. Symptoms of exposure include coughing, chest pains, headache, fatigue, salivation, weight loss, and skin and eye irritation. The primary target organ of elemental mercury is the central nervous system, resulting in damage to sensory systems. The PEL-TWA for exposure to mercury vapor is 0.05 mg/m^3 (SKIN).

Inorganic mercury compounds are toxic by inhalation, ingestion, and skin and eye contact. Acute poisoning results in lung damage. Chronic poisoning typically produces four classical symptoms: gingivitis; salivation; increased irritability; and muscular tremors. Delirium and other psychological abnormalities can also result from chronic exposures. Inorganic mercurials also have a corrosive effect on the alimentary tract, and kidney damage can result from exposure. The current PEL limit for inorganic mercury is 0.1 mg/m^3 (ceiling, SKIN).

Organomercury compounds include the methyl mercuries and aryl mercuries, many of which are used as herbicides or pesticides. Methyl mercury is toxic by inhalation, resulting in central nervous system damage manifested in tremors or sensory disturbances. Infants exposed to high methyl mercury before birth can exhibit severe central nervous damage. The current PEL-TWA for organo-alkyl compounds as Hg is 0.01 mg/m^3 with an STEL of 0.03 mg/m^3 (both, SKIN), and the PEL for aryl mercury compounds is the same as for inorganic mercury, described above.

Chromium Health Effects. Chromium metal and insoluble chromium salts can affect the body if inhaled or swallowed. Ferrochrome alloys have been associated with lung disease in humans. Certain forms of chromium (VI) compounds have been found to cause increased respiratory cancer

lungs. Eye irritation results from exposure to hydrogen sulfide, and symptoms include photophobia and lacrimation. Subacute exposures to hydrogen sulfide may result in headache, dizziness, staggering gate, and agitation. Tremors, weakness, nausea, and diarrhea may also occur, but recovery is usually complete from such exposures. Acute exposure at higher concentrations may result in immediate coma, and death can follow rapidly as a consequence of respiratory failure. The mode of toxic action involved in this reaction is believed to be inhibition of the respiratory enzyme cytochrome oxidase, which effectively disrupts the process of respiration. The current PEL-TWA for hydrogen sulfide is 10 ppm, with an STEL of 15 ppm.

Potential Chemical Exposure Routes

Possible exposure routes for site chemicals include inhalation, skin contact, and accidental ingestion, as discussed in the following.

Inhalation. This route of entry could occur if volatile chemicals become airborne during site activities, especially upon exposure to open air, warm temperatures, and sunlight. Based on previous site information, however, volatile organic chemicals are not expected to be present in the sediments at levels of concern for occupational exposures. It is possible that hydrogen sulfide could be encountered at levels of concern for occupational exposure in some sediment samples. Air monitoring and control measures specified below in this plan will minimize the possibility for inhalation of hydrogen sulfide.

Skin Contact. This route of entry could occur if contaminated sediments contact the skin or clothing. Protective clothing and decontamination activities specified in this plan will minimize the potential for skin contact with the contaminants.

Ingestion. This route of entry could occur if individuals eat, drink, smoke, or perform other hand-to-mouth contact in contaminated areas. Eating or drinking will be restricted to clean areas and personal decontamination will be required prior to these activities. Smoking will not be permitted in any active work areas. Decontamination procedures,

Air Monitoring and Action Levels

Personnel who handle sediments will wear hydrogen sulfide detector badges. The badges indicate the presence of hydrogen sulfide colorimetrically, and will turn from white to brown with a 10 minute exposure to hydrogen sulfide at the PEL level of 10 ppm. The badges have a 6 month shelf life from the date of receipt, and will not be used in the field beyond 5 months from receipt. If any badges at any time register a color change, the Field Health and Safety Manager will arrange for fan ventilation of the work area. Monitoring will be continued to ensure that hydrogen sulfide levels remain below the PEL. A portable hydrogen sulfide sensing meter (MSA 361 or equivalent) will also be available for measuring ambient concentrations on a continuous basis, as needed.

Protective Clothing

Hard hats, safety glasses, and safety shoes or boots will be worn at all times while on board the sampling vessel. All personnel handling sediment samples will also wear chemical resistant gloves and appropriate protective clothing. Field workers will wear coated Tyvek or equivalent; laboratory workers will use equivalent clothing or lab coats/aprons in activities with more limited contact potential. Safety glasses and/or goggles will also be worn whenever the possibility of splashing material into the eyes exists.

Work Zones and Decontamination Procedures

Site control will be accomplished by establishing exclusion, contamination reduction, and support zones on the work boat, barge, and all land work areas. These zones will be required whenever contaminated sediments or samples are being handled. Exact zone locations will be established during the field work start-up activities, as necessary.

It is expected that some sampling areas (e.g., upland habitat) will be designated support zones and few or no control and protection procedures will be necessary.

Physical Hazards due to Machinery

The sampling vessel will be equipped with various winches, motors, booms, and other machines. These present a general physical hazard from moving parts.

Personnel will stand clear of machinery at all times unless specific instructions are given by the vessel skipper or other person in authority. Hard hats and steel toe shoes or boots will be worn at all times when on board the sampling vessel. When possible, appropriate guards will be in place during equipment use.

Falling in the Water

As with any offshore work, there is a possibility of falling overboard. When possible, personnel will stand well in from the edges of the deck. Personal floatation devices will be worn at all times when on board the sampling vessel. At least one person trained in First Aid and CPR will be on site at all times.

Laboratory Chemical Safety

- Safety goggles will be worn whenever hazardous chemicals are being used.
- Chemical resistant gloves and aprons will be worn whenever there is a potential for chemical exposure.
- An eye-wash station shall be provided near each chemical handling area.
- All containers will be accurately labeled with the contents and solution strength of the chemical stored within. Nonbreakable containers will be used whenever possible.
- When working aboard a ship, chemical containers will be secured for rough seas before the cruise begins, regardless of the prevailing sea

- Chemicals and samples that are preserved in chemical solutions will be carefully packed and properly labeled before transport to prevent injury to persons handling the samples.

- All preserved samples are to be packaged in DOT-approved containers such as the Nalgene brand DOT-approved bottles.

- A note will be attached to the outside of an ice chest to inform the laboratory of any special hazards involved in handling the samples (formalin preservative, hydrogen sulfide hazard, etc.).

Contact with Field and Laboratory Chemicals

Sample preservation and analysis will require the use of chemicals which may be hazardous. These materials include formaldehyde, ammonium formate, methylene chloride, cadmium chloride, and cytological grade alcohol (ethyl or isopropyl alcohol).

Formaldehyde Health Effects. Formaldehyde is toxic through inhalation, ingestion and dermal contact. The commonest form is aqueous solution, but the fumes are also hazardous. Exposure causes irritation to skin, eyes and respiratory tract. May also cause blindness. Ingestion can cause death. The current PEL-TWA for formaldehyde vapor is 3 ppm. Formaldehyde is suspected of being carcinogenic.

Ammonium Formate Health Effects. Ammonium formate is only moderately toxic. Concentrated solutions may cause skin irritation or ulceration of mucous membranes. Inhalation of dust may irritate the respiratory tract. There are no current PEL-TWA values for ammonium formate.

Methylene Chloride Health Effects. Dichloromethane is toxic via inhalation, ingestion and dermal contact. It is a central nervous depressant; it also causes irritation to the skin, eyes, and respiratory tract. It may cause liver injury and blood disorders. The airborne PEL-TWA is 500 ppm. Dichloromethane is also suspected of being carcinogenic.

Cadmium Chloride Health Effects. Cadmium chloride is very toxic

system depressant; it can also cause gastritis and nausea. The airborne PEL-TWA for ethyl alcohol is 1,000 ppm.

Isopropyl Alcohol Health Effects. Isopropyl alcohol is toxic through ingestion or inhalation. It is a skin irritant. Ingested or inhaled it is a central nervous system depressant; it can also cause vomiting, diarrhea, and death. Eye contact can cause corneal burns. The airborne PEL-TWA is 400 ppm.

Control and Protection

- Safety goggles will be worn whenever hazardous chemicals are being used.

- Chemical resistant gloves, boots, and splash resistant protective clothing will be worn whenever there is a potential exposure to chemicals or contaminated sediments.

- A fit-tested half-mask air purifying respirator (NIOSH approved) with an organic fume respirator cartridge will be worn while using decontamination solvents.

- An eye-wash station shall be provided near each chemical handling area. In the event of eye contamination with chemicals, an immediate 15 minute flush with eye-wash solution will be performed and the employee will be transported to the local medical facility for observation.

- A clean water rinse will be provided near each chemical handling area to aid in decontamination of personnel exposed to chemicals or contaminated sediments. Protective clothing that has become contaminated will be flushed with clean water to remove chemicals or sediments prior to removal of the clothing. Any inner clothing which becomes contaminated through the protective outer wear shall immediately be removed. Any skin which becomes contaminated should be promptly washed with soap and water. If visible effects or symptoms are observed after an accidental exposure to chemicals or contaminated

- A chemical spill cleanup kit will be kept near each chemical handling area.

- All containers will be accurately labeled with the contents and solution strength of the chemical stored within. Nonbreakable containers will be used whenever possible.

- When working aboard a ship, chemical containers will be secured for rough seas before the cruise begins, regardless of the prevailing sea conditions at the time.

- Adequate ventilation will be provided when working with chemicals.

- All hazardous waste materials will be disposed of according to federal and state laws. Dilute chemical solutions (e.g., less than 5 percent formalin) that can be legally sent to the municipal sewage system, will be disposed of in that manner. Concentrated solutions will be stored in clearly labeled waste containers, with one container for each type of chemical, and will be sent to a licensed waste disposal company for disposal.

- Chemicals and samples that are preserved in chemical solutions will be carefully packed and properly labeled before transport to prevent injury to persons transporting the samples.

- All preserved samples are to be packaged in DOT-approved containers such as the Nalgene brand DOT-approved bottles to reduce the chance of leakage of chemical preservatives.

- A note will be attached to the outside of an ice chest to inform the laboratory of any special hazards involved in handling the samples (formalin preservative, hydrogen sulfide hazard, etc.)

Diving Safety

Scope

Pre-Dive Procedures

- All divers will be issued and will read a copy of the Washington Department of Labor and Industries Title 296 WAC.

- A First Aid Kit appropriate for the diving operation shall be available at the dive location.

- An American Red Cross standard first-aid handbook and a bag-type manual resuscitator with transparent mask and tubing will be available at the dive location.

- The dive boat will be equipped with a VHF radio and cellular telephone to aid in obtaining emergency assistance.

- Only certified SCUBA divers will be allowed to use SCUBA equipment.

- SCUBA divers will take a CPR class, a basic first aid class, and a "Rescue Diver" safety class prior to engaging in any SCUBA diving activities.

- Divers shall always use the buddy system and work in teams or be in voice communication with the support vessel.

    - Each diver shall have the following safety equipment:

        - Buoyancy compensator with power inflator;
        - Tank pressure gauge;
        - Depth gauge;
        - "Octopus" regulator for emergency use;
        - Knife; and
        - Quick release buckle on the weight belt.

- Diving equipment will be inspected prior to each dive by the diver. Faulty equipment not be used until repaired by a qualified repair facility.

- Divers will participate in a pre-dive briefing on the work to be performed, any unusual surface or underwater conditions or hazards, safety procedures, communications, any modifications to standard operating procedures necessitated by the specific diving operation.

- Divers who feel that they cannot safely dive for any reason (health, strong currents, boat traffic, etc.) shall immediately terminate the dive until the problem is corrected.

- Decompression diving will not be performed. A decompression meter will be used to keep the bottom time down to the point that decompression is not required.

- Divers will not exceed 75 ft in depth at any time.

- Diving will not be performed in currents exceeding 1 knot in speed.

- The dive-tending boat's engine shall be shut down when divers are leaving or entering the boat unless doing so would result in a serious risk to the vessel.

- A diver tender will remain in the boat while divers are in the water. It is the responsibility of the tender to keep other boats away from the dive site and to aid the divers as necessary.

- The dive tender shall not deploy anchors or lower or lift heavy objects over the side of the boat which could fall on the divers. Such movement of heavy objects shall only be permitted if the dive tender and SCUBA divers can coordinate their actions to eliminate any risk (for example, divers would stay underneath a pier while the operation is in progress).

- The appropriate safety warning flags shall be flown while divers are in the water. Both the red and white "Diver Down" flag and the international "Alpha" flag (vessel has limited maneuverability) will be displayed at the same time.

- Divers shall immediately report any physical problems or adverse physiological effects including symptoms of decompression sickness to the senior staff person at the dive site.

- Divers will arrange their schedule to avoid flying within 24 hours of diving.

- A dive log will be maintained which will include: Date, location, project number, bottom time, maximum depth, dive team members including designated person-in-charge, approximate underwater and surface conditions (visibility, water temperature and current) and purpose of dive.

- Any person involved in a SCUBA diving accident which results in unconsciousness will IMMEDIATELY be taken, by the fastest route available, to the nearest recompression chamber. In the Tacoma area this is: Virginia Mason Hospital, 925 Seneca, Seattle, phone 583-6433.

- For emergency transportation, call "911" for aid car or contact the U.S. Coast Guard on VHF channel 16. All diving accidents are life threatening and should be considered a "Mayday" situation.

- The diving partner of victim of a SCUBA accident shall accompany the victim to the hospital assure that the medical personnel are properly informed of the facts leading to the accident.

- If the victim is transported via aircraft, the flight crew should be urged to fly at the lowest safe altitude so that the victim's condition is not made worse by lowered ambient air pressure.

Medical Surveillance

- All employees will have a medical surveillance physical performed prior to working on the field site and annually thereafter. An additional medical surveillance physical will be performed as soon as possible following any emergency incident involving chemicals or

- The physician will:
  - Provide a written medical report containing:
    - The results of the medical examination.
    - The examining physician's opinion of the employee's fitness to be exposed to work site conditions including any recommended restrictions or limitations.
  - Notify patient of any abnormal findings at time of exam.
  - Call the employee's Safety Officer if there are any medical abnormalities or irregularities.
  - Supply patient with copies of exam results if they request them.
- The medical facility will retain all records of exam.
- The employer will pay all fees associated with the exam.
- The Occupational & Medical History (Baseline) physical examination will include the following:
  - Medical History and General Physical
  - Visual Acuity
  - Audiogram
  - Pulmonary Function Test
  - EKG w/interpretation
  - Occupational Medical Screen (CBC, UA-Micro, HDL Cholesterol, Direct Bilirubin, T4)
  - Chest X-Ray (optional)
  - Occupational Medical Profile
  - Any other toxicology tests that the physician believes are appropriate.

Contingency

If unanticipated conditions arise, contact the Corporate or Parametrix Project Health and Safety Manager.

Telephone Numbers

Parametrix Personnel	
Parametrix Home Office	822-8880
Glenn B. Grette (Home)	509-664-3650
Tracy P. McKenzie (Home)	546-5714
U.S. EPA Region 10	
General Information	553-1200
Emergency	553-1200
Washington State Department of Ecology	
General Information	867-7000
Emergency	867-7000
Coast Guard	
General Information	442-5295
Emergency	286-5400
VHF	Channel 16
Tacoma General Hospital	
General Information	594-1000
Emergency	594-1050
Virginia Mason Hospital	
General Information	624-1144
Emergency	583-6433
Emergency	
General Emergency	911

The primary sampling vessel will be equipped with a mobile telephone.

Safety Manager for review and then filed with the project file at Parametrix.

In addition, all individuals expecting to work on the site will read this Health and Safety Plan, and indicate on the ***Record of Health and Safety Requirement Communication*** that they have read the plan and that they understand the requirements which are detailed for work practices on this project.

Follow Up Report

At the end of the work, health and safety monitoring information will be summarized for the project files.

Training

The project field personnel are professionals trained in a specific academic area.

The project team will consist of chemists, engineers, geologists, biologists, divers, vessel operators, sampling specialists, technicians, industrial hygienists, and others. They will all receive the required level of health and safety instruction, as well as pertinent refreshers and additional training. In addition to health and safety training, most members of the field team have attended an American Red Cross course in CPR and First Aid.

Record of Health and Safety Requirement Communication

The Project personnel will be given a copy of the Health and Safety Plan to review for information concerning requirements of work tasks specific to their involvement in the project. By signing, these personnel indicate that they have read the plan including the referenced information and that they understand the requirements which are detailed for work practices on this project.

Other individuals that may participate in or observe monitoring activities

PRINTED NAME	SIGNATURE	DATE