Removal Action/Stormwater Treatment Completion Report North Boeing Field Seattle, Washington

March 23, 2012

Prepared for

The Boeing Company
Seattle, Washington

LANDAU ASSOCIATES
130 2nd Avenue South
Edmonds, WA 98020
(425) 778-0907

CERTIFICATION FOR
REMOVAL ACTION/STORMWATER TREATMENT COMPLETION REPORT
NORTH BOEING FIELD,
SEATTLE, WASHINGTON

"Under penalty of law, I certify that, to the best of my knowledge, after appropriate inquiries of all relevant persons involved in the preparation of the report, the information submitted is true, accurate, and complete. I am aware that there are significant penalties for submitting false or misleading information, including the possibility of fine and imprisonment for knowing violations."

Joseph A. Kalmar	Landau Associates, Inc.
Printed Name	Company
Signature	Principal Title

The *Administrative Settlement Agreement and Order on Consent for Removal Action* requires this certification to be signed by the person who supervised or directed the preparation of this Removal Action/Stormwater Treatment Completion Report.

TABLE OF CONTENTS

		Page
1.0	INTRODUCTION	1-1
1.1	PROJECT SITE DESCRIPTION	1-1
1.2	PROJECT BACKGROUND	1-1
1.3	TREATMENT SYSTEM SIZING	1-4
1.4	TREATMENT SYSTEM DESIGN	1-5
1.4.1	Stormwater Collection Pump Operation and Control	1-6
1.4.2	LTST System Instrumentation and Controls	1-7
1.4.3	Incorporation of EPA Green Remediation Policy	1-8
1.4.4	System Reliability and Discharge Water Quality	1-8
1.5	OTHER EVALUATIONS AND DOCUMENTS	1-9
1.5.1	Bed Load Sampling	1-9
1.5.2	Media Bed Pilot Study	1-10
2.0	PERFORMANCE STANDARDS AND CLEANUP GOALS	2-1
2.1	LTST SYSTEM PERFORMANCE STANDARDS	2-1
2.2	LTST TREATMENT GOALS	2-2
3.0	TREATMENT SYSTEM CONSTRUCTION ACTIVITIES	3-1
3.1	CONVEYANCE SYSTEM CONSTRUCTION ACTIVITIES	3-1
3.1.1	Earthwork	3-2
3.1.2	Soil Management	3-3
3.1.3	Construction Dewatering and Dewatering Fluids Treatment	3-4
3.2	ACCESS AND PERMITTING	3-6
3.3	LTST EQUIPMENT INSTALLATION AND STARTUP	3-7
3.4	LTST PROJECT CHRONOLOGY	3-9
3.5	GREEN REMEDIATION POLICY	3-9
3.6	PROJECT QA/QC	3-12
3.7	DESIGN FLEXIBILITY AND CONTINGENCIES	3-14
4.0	OPERATION AND MAINTENANCE REQUIREMENTS	4-1
4.1	MONITORING	4-2
4.2	POINT OF COMPLIANCE	4-3
4.3	REPORTING	4-3
5.0	SUMMARY OF PROJECT COSTS	5-1
6.0	USE OF THIS REPORT	6-1
7.0	REFERENCES	7-1

FIGURES

Figure	Title
1	Vicinity Map
2	North Boeing Field Stormwater Drainage Basins
3	STST Sampling Locations and Pre-LTST Storm Drainage Configuration
4	Updated Storm Drainage System and LTST Sampling Locations
5	Long-Term Stormwater Treatment New Storm Drain Construction
6	Schematic Diagram of LTST System Components
7	Overhead View of Completed LTST System
8	LTST Sampling Locations
9	Completed Project Schedule for Long-Term Stormwater Treatment Construction

TABLES

Table	Title
1a	Short-Term Removal Action Sampling and Analysis Summary
1b	Long-Term Removal Action Sampling and Analysis Summary
2	Project Documents Produced Under the ASAOC
3	Project Consultants and Contractors
4	ASAOC-Related Project Costs

APPENDICES

Appendix	Title
A	Record Drawings for the Long-Term Stormwater Treatment System
B	Record Drawings for Storm Drain Re-route and Modifications
C	Environmental Soil Screening Analytical Results and Laboratory Reports
D	Discharge Authorization for Treated Dewatering Fluids and Analytical Results
E	Sand Filter and Media Specifications
F	Documentation of Green Power Purchase
G	Electrical Permit Documentation
H	Operation and Maintenance Manual for Long-Term Stormwater Treatment
I	Soil Disposal Truck Weigh Tickets
J	Contractor Specifications for Green Remediation Practices

LIST OF ABBREVIATIONS AND ACRONYMS

AKART	All Known, Available, and Reasonable Methods of Prevention, Control, and Treatment
ASAOC	Administrative Settlement Agreement and Order on Consent
BGS	Below Ground Surface
BMPs	Best Management Practices
Boeing	The Boeing Company
CERCLA	Comprehensive Environmental Response, Compensation, and Liability Act
CESF	Chitosan-Enhanced Sand Filtration
City	City of Seattle, Washington
DOC	Diesel Oxidation Catalyst
DPF	Diesel Particulate Filter
DTS	Dewatering Treatment System
EAA	Early Action Area
Ecology	Washington State Department of Ecology
EOF	Emergency Overflow
EPA	U.S. Environmental Protection Agency
FAA	Federal Aviation Administration
FOD	Foreign Object Debris
FOG	Fats, Oils and Grease
FSP	Field Sampling Plan
FWAAC	Flow-Weighted Average Annual Concentration
ft	Foot
GAC	Granular Activated Carbon
IG	Interim Goal
gpm	Gallons per Minute
GTSP	Georgetown Steam Plant
g/yr	Grams per Year
HDPE	High Density Polyethylene
HMA	Hot Mix Asphalt
hp	Horsepower
KCIA	King County International Airport
kW	Kilowatt
kWh	kilowatt-hours
LDW	Lower Duwamish Waterway
LF	Lineal Feet
LSIV	Lift Station Inlet Vault
LTST	Long-Term Stormwater Treatment
mg/kg	Milligrams per Kilogram
mg/L	Milligrams per Liter
NBF	North Boeing Field
NOx	Nitrogen Oxides
NTU	Nephelometric Turbidity Unit
O&M	Operation and Maintenance
OSR	Off-site Rule
PAHs	Polycyclic Aromatic Hydrocarbons
Panel	NBF Stormwater Expert Panel
PCBs	Polychlorinated Biphenyls
PLC	Programmable Logic Controller
PM	Particulate Matter
ppb	Parts per Billion

LIST OF ABBREVIATIONS AND ACRONYMS
(Continued)

ppm	Parts per Million
PVC	Polyvinyl Chloride
QAPP	Quality Assurance Project Plan
RAWP	Removal Action Work Plan
RCRA	Resource Conservation and Recovery Act
SAP	Sampling and Analysis Plan
SMS	Sediment Management Standards
SEPA	State Environmental Policy Act
sf	Square Feet
SOW	Statement of Work
SQS	Sediment Quality Standards
STST	Short-Term Stormwater Treatment
SWPPP	Stormwater Pollution Prevention Plan
TESC	Temporary Erosion and Sediment Control
TOC	Total Organic Carbon
TSS	Total Suspended Solids
µg/kg	Micrograms per Kilogram
µg/L	Micrograms per Liter
µm	Micron
VCA	Verification of Continued Acceptability
VFD	Variable Frequency Drive
WAC	Washington Administrative Code
WISHA	Washington Industrial Safety and Health Act
WSDOT	Washington State Department of Transportation

1.0 INTRODUCTION

This document presents a completion report for long-term stormwater treatment (LTST) at North Boeing Field (NBF). A figure showing the vicinity of the site is provided as Figure 1. The U.S. Environmental Protection Agency (EPA) and Washington State Department of Ecology (Ecology) have been working with The Boeing Company (Boeing); the City of Seattle (City), Washington; and King County to eliminate sources of polychlorinated biphenyls (PCBs) in stormwater discharges to Slip 4 of the Lower Duwamish Waterway (LDW). On September 23, 2010, EPA issued an Action Memorandum for the Time-Critical Removal Action at North Boeing Field near the Slip 4 Early Action Area of the Lower Duwamish Waterway Superfund Site (EPA 2010). On September 29, 2010, Boeing entered into an Administrative Settlement Agreement and Order on Consent for Removal Action (ASAOC) with the EPA (EPA and Boeing 2010). This document is a required deliverable under the ASAOC, which requires that Boeing address the discharge of PCBs to the Slip 4 Early Action Area (EAA) through short-term and long-term stormwater treatment removal actions. The LTST system is now functional and operational, and consists of a chitosan-enhanced sand filtration (CESF) system that preferentially treats storm flows from the NBF North Lateral, while also treating storm drain base flow and a portion of all the storm flow that drains to the lift station and to Slip 4 (Figure 2).

1.1 PROJECT SITE DESCRIPTION

NBF is located east of East Marginal Way South, adjacent to the King County International Airport (KCIA) and the City's Georgetown Steam Plant (GTSP). The approximate street address is 7370 East Marginal Way South, Seattle, Washington. NBF is approximately 150 feet (ft) from the head of Slip 4, which is an EAA at approximately River Mile 2.8 on the Duwamish Waterway within the LDW Superfund Site. The location of the site is shown on Figure 1.

1.2 PROJECT BACKGROUND

Boeing has conducted operations at NBF since the 1940s. NBF is used for research, flight testing, aircraft finishing, and delivery facilities. Stormwater from NBF is collected and conveyed by storm drains to Slip 4 of the LDW. In 2001, the LDW was placed on the National Priorities List (Superfund) pursuant to the Comprehensive Environmental Response, Compensation, and Liability Act (CERCLA). In 2003, the sediments and portions of the bank in Slip 4 were identified as an EAA due to the presence of PCBs in the sediment. Prior to cleanup of Slip 4, Ecology determined that ongoing sources of PCB discharges to Slip 4 should be controlled to reduce the likelihood of recontamination of the sediment following cleanup. Previous investigations at the NBF site identified the presence of PCBs

in solids in manholes, catch basins, and sediment traps, and in water in the NBF storm drain system, which discharges to Slip 4 via the KCIA Storm Drain #3 PS44 Emergency Overflow (EOF).

As defined in the ASAOC, "stormwater" shall mean all liquids, including any particles dissolved therein, in the form of base flow, stormwater runoff, snow melt runoff, and surface runoff and drainage, as well as all solids that enter the storm drainage system. "System," when used in the context of storm drainage, shall mean the combination of all manholes, catch basins, pipes, and other drainage devices and conveyances designed, constructed, and used for the purpose of carrying stormwater from NBF to Slip 4 of the LDW, and the drainage basin associated with these devices and conveyances.

The majority of PCBs discharging from NBF to Slip 4 via the NBF storm drain system were previously identified to be from the North Lateral portion of the storm drain (SAIC 2010a). Under the ASAOC, Boeing installed a short-term stormwater treatment (STST) facility to remove PCBs from a large portion of the North Lateral of the NBF storm drain system prior to discharge to Slip 4 (Landau Associates 2010, 2011a). The STST facility, consisting of a 500 gallon per minute (gpm)-capacity CESF system, was placed into continuous operation on September 15, 2010 and operation continued until the 1,500 gpm LTST facility was installed and operating on October 28, 2011.

During operation of the STST facility, whole water grab samples and filtered solids were collected at the STST facility and two ISCO automated samplers were set up downstream of the STST facility to monitor compliance with the Interim Goals established by the EPA for the STST facility, to evaluate performance of the STST facility, and to support design of the LTST facility. Compliance monitoring during the STST operation was performed using ISCO automated samplers to collect flow-weighted stormwater samples. The ISCO samplers were located at MH108 and LS431. A figure showing the STST sample locations and pre-LTST storm drain configuration is provided as Figure 3. In addition, the treatment system supplier and operator, Clear Water Services (Clear Water), analyzed whole water samples of the effluent for residual chitosan.

STST whole water samples were collected from sample ports on both the influent and effluent lines of the treatment system for analysis of PCBs and total suspended solids (TSS). The time of effluent sample was staggered from the time of influent sampling to attempt to sample the same parcel of water before and after treatment. Filtered solids were collected using filter bags on both the influent and effluent lines and analyzed for PCBs. When the submersible pump located in MH130A turned on, a portion of the flow was diverted through the filter bag, through a flow totalizer, and into the pretreatment tank via a dedicated flexible hose. As the treatment system discharged treated stormwater, a portion of the flow was diverted through the filter bag, through a flow totalizer, and rejoined the discharge flow to MH130C. The analytical methods and target reporting limits for the STST facility sampling are provided in Table 1a. Summary information for the STST system includes the following:

- STST criteria in the ASAOC for in-line storm drain solids discharged to Slip 4 were to be below 10 milligrams per liter (mg/L) as a daily maximum concentration and 5 mg/L as an average monthly concentration. In addition, PCB criterion for the whole water aquatic life-marine/chronic water quality standard was established as 0.03 micrograms per liter (µg/L) following completion of the Slip 4 Salinity Study (AMEC Geomatrix 2011).
- Whole water influent and effluent grab samples were analyzed by Analytical Resources, Inc. (ARI) for PCBs using EPA Method 8082 and for TSS using EPA Method 2540.
- Filtered solids influent and effluent samples were analyzed by ARI for PCBs using EPA Method 8082.
- Whole water influent and effluent grab samples and filtered solids influent and effluent samples were also analyzed for other parameters including metals (arsenic, cadmium, chromium, copper, lead, mercury, silver, and zinc); polycyclic aromatic hydrocarbons (PAHs); total organic carbon (TOC); and other conventional parameters following an Ecology sampling and analysis plan (SAP) and addenda (SAIC 2009, 2010b, 2010c).
- For the full duration of operation (September 15, 2010 through October 28, 2011), the system treated and discharged approximately 34.9 million gallons of stormwater, influent concentrations of TSS ranged from 3.0 to 63.2 mg/L with a mean of approximately 11.3 mg/L, and effluent concentrations of TSS were not detected above 1.5 mg/L. The full tabular summary of the data set for TSS and PCBs measured in STST influent and effluent is available in the November 2011 Progress Report (Landau Associates 2011b).
- For PCBs, Aroclor 1254 was the predominant detected Aroclor, with Aroclor 1260 being detected in only 5 of the 66 STST influent samples (including duplicate samples). The concentration range of total PCBs in influent was from non-detect (at a typical reporting limit of 0.010 µg/L) to 0.330 µg/L. The concentration range of total PCBs in effluent was from non-detect (at a typical reporting limit of 0.010 µg/L) to 0.022 µg/L. No detected concentrations of total PCBs exceeded the marine chronic water quality criterion of 0.030 µg/L in treated STST effluent.
- Total amount of solids removed from stormwater and collected within the storage tanks of the treatment system during the full STST operation period was approximately 32.2 tons, of which 22.7 tons of material was sent to Columbia Ridge for disposal and approximately 9.5 tons of material is pending disposal at Roosevelt Landfill.

Compliance with the Action Memorandum (EPA 2010) requirement that "In-line storm drain solids discharged to Slip 4 must be below 100 parts per billion (ppb) dry weight total PCBs" was discussed in an analysis of All Known, Available, and Reasonable Methods of Prevention, Control, and Treatment (AKART) that evaluated stormwater treatment alternatives. In that AKART Analysis Report (Geosyntec Consultants 2011a), it was described how the EPA interim goal of 100 ppb PCBs in solids was not a reasonable or technically achievable goal. As an alternative to the PCB solids interim goal and the SAIC sediment recontamination model, a memorandum was prepared (Jones et al. 2011) for EPA that documented the development of a new mass load-based interim goal that is expected to prevent recontamination of Slip 4 sediments. That analysis, using conservative assumptions, resulted in the development of a flow-weighted average annual concentration (FWAAC) for total PCBs in water of

0.018 µg/L. A more complete summary of the alternative solids interim goal, and how it will be computed, is provided in the SAP (Landau Associates 2012).

The STST facility demonstrated that CESF was very effective at reducing the mass of TSS and PCBs in stormwater. Therefore, the LTST facility was designed around a similar CESF system, although significantly larger in footprint and capacity. Greater detail on the design of the LTST facility can be found in the *100% Design Report, Long-Term Stormwater Treatment* (Landau Associates 2011c), and is summarized below.

Operation of the LTST facility officially began on October 28, 2011. Monitoring, as described in the final *Sampling and Analysis Plan, Long-Term Stormwater Treatment* (Landau Associates 2012) is ongoing at the LTST facility, the point of compliance where stormwater discharges from NBF to Slip 4, and at other locations throughout the NBF site. Revisions were made to the final SAP to incorporate changes to the EPA Interim Goals for solids.

1.3 TREATMENT SYSTEM SIZING

The entire NBF drainage basin area is approximately 303 acres. NBF stormwater drainage basins are shown on Figure 2. Because of the very large drainage area, it is not feasible to treat all stormwater runoff from all storm events. An evaluation of PCB load reductions at various treatment system flow rates was performed in preparation of the LTST pre-design technical memorandum (Geosyntec Consultants and Landau Associates 2011). Based on this evaluation, Boeing and EPA agreed on an acceptable design basis of 1,500 gpm.

A 1,500 gpm CESF system, including a minimum 500 gpm pump capacity at MH130A, is anticipated to achieve a long-term average volume capture at the lift station (LS431) of 81 percent of runoff from only onsite drainage, and 59 percent of runoff from combined onsite and offsite drainage basins. A portion of storm flows from other laterals, all of which are routed to the Lift Station Inlet Vault (LSIV) and commingled, will also be treated subject to available capacity in the LTST system. The LTST system operates at full capacity (1,500 gpm) whenever sufficient stormwater is present.

As described in the *LTST Removal Action Work Plan* (RAWP) and RAWP Addendum (Geosyntec Consultants 2011b,c), the 1,500 gpm LTST system is predicted to achieve a total PCB load reduction of approximately 73 percent annually [or approximately 96 percent in dry weather, reduced from 6.7 to 0.24 grams per year (g/yr), and approximately 68 percent in wet weather, reduced from 32 to 10.4 g/yr]. It was also estimated that the LTST system will comply with the Interim Goal for water approximately 96 percent of the time during a “typical” year (or 100 percent of dry days and 90 percent of wet days per year) based on rough estimates using limited available water and filtered solids dry and wet weather monitoring data. The long-term Interim Goal outlined in the ASAOC statement of work (SOW)

for PCBs in water for Aquatic Life – Marine/Chronic is 0.030 µg/L (EPA 2011a, EPA and Boeing 2010). More information on treatment goals may be found in Section 2.2.

1.4 TREATMENT SYSTEM DESIGN

The CESF treatment process starts by settling out coarse solids in an aboveground settling/storage tank, then the coagulated solids [via chitosan acetate dosage (less than one part per million {ppm} of chitosan acetate solution containing the natural biopolymer chitin)] settle out in additional aboveground settling/storage tanks, and, finally, sand filtration (through a bank of sand filter units) removes the remaining coagulated solids. The sand filter units are automated to perform sequential backflushing to maintain the necessary system treatment capacity and associated TSS and PCB removal efficiency. This approach has proven effective for removing PCBs in water using the NBF STST system.

The main components of the 1,500 gpm-sized system are one inlet weir/settling tank and one backflush solids settling tank (each approximately 17,800-gallon capacity); three storage tanks (each approximately 21,000-gallon capacity); three sand filter systems each consisting of four individual 54-inch diameter sand filter vessels; and a control system housed within a metal storage container. The 1,500 gpm LTST system was designed to fit within an approximately 7,000 square foot (sf) area adjacent to and south of LS431. The as-built condition of the treatment system equipment is shown on the record drawings in Appendix A.

Each of the three independent sand filter systems is sized to treat a design flow rate of 500 gpm, with filtration capacity of up to 700 gpm for temporary processing of backflush water or treated stormwater that is recirculated for additional treatment. One sand filter system is made up of four vessels containing media consisting of gravel, garnet, and sand. The sand filter media does not contain granular activated carbon (GAC). Having three independent sand filter systems allows portions of the treatment system to operate more continuously during low-flow conditions, keeps the size of the system components to within a range that avoids larger special-order equipment, allows more flexibility in maintenance (ability to take one of the systems off-line for periodic maintenance), and allows for potential downsizing of the system in the future.

The sand filter backflush water discharges to the backflush settling tank. Backflushing is automated and sequenced to backflush one vessel at a time, which minimizes backflush flow rates. With a design backflush flow rate of only 239 gpm, there is a relatively long hydraulic retention time in the backflush tank that allows for very effective settling of backflushed solids. Calculations for sizing and selection of tanks, pumps, and pipe diameters were provided in the *100% Design Report* (Landau Associates 2011c).

1.4.1 STORMWATER COLLECTION PUMP OPERATION AND CONTROL

Stormwater is pumped from MH130A (which drains a portion of the onsite North Lateral) directly into the inlet weir tank of the LTST system for treatment. The route of the 8-inch diameter high density polyethylene (HDPE) stormwater conveyance pipe from MH130A to the LTST system is shown on the civil design drawings in Appendix B. The civil design engineer for the new storm drain conveyance piping, URS, estimated that the design piping route, along with the existing submersible pump, should allow continued stormwater pumping from MH130A at a design flow rate of 500 gpm.

The remaining LTST capacity (after treating the flows from MH130A) is utilized by pumping available base and stormwater flow from the LSIV. The LTST system operates at full capacity (1,500 gpm) whenever sufficient stormwater is present.

A submersible pump is installed in the LSIV. This inlet vault is referred to as OWS421 in Boeing storm drain drawings and in some prior LTST documents. This inlet vault structure is not a baffled oil/water separator as might be inferred by its reference number. The inlet weir tank of the LTST system, however, is designed with underflow and overflow baffles to help remove debris and contain floating fuel/oil if spilled fuel/oil were to reach the LSIV and was pumped into the LTST system prior to discovery of the spill.

Typically, significant quantities of solids do not collect in the LSIV due to the turbulence generated by incoming stormwater and the activation of the large 50 horsepower (hp) King County lift station pumps; however, heavier sand particles may accumulate in the corners and near the sides of the lift station sump where turbulence is lower. The new pump in LSIV is not anticipated to significantly alter the accumulation of solids in the LSIV. The initial transfer pump (pre-treatment pump, P-301) is designed to pass up to 7/8-inch solids, and the inlet weir tank allows settling of solids that size or larger. The inlet flow meter is an electromagnetic flow meter, which does not have a turbine wheel or paddle wheel to catch solids or debris. A basket strainer is installed in the outlet pipe of the weir tank to reduce the size of debris that can reach the pre-treatment pump (As-Built Drawing M502, Appendix A). This allows greater assurance of pump protection against neutrally buoyant debris that might pass through the inlet weir tank and otherwise become caught in the primary transfer pump.

Currently, all stormwater from the four main NBF storm drain laterals and King County reroute storm line (with the exception of water pumped from MH130A) mixes together in the LSIV and is pumped to the LTST system (at a flow rate up to the 1,500 gpm treatment capacity of the LTST system). The aboveground inlet weir tank and three storage tanks have water level sensors that are used to adjust pump operation through a programmable logic controller (PLC). Flow rate data from the inlet flow meters are monitored and the LSIV submersible pump can be deactivated or its motor slowed down by the variable frequency drive (VFD). In doing this, normal system controls will act to prevent a tank

overflow event. As an additional safety device, high water level switches are installed at the inlet weir tank and the three connected storage tanks to shut down the lift station submersible pump and/or the pre-treatment pump until the tank levels are back within the normal operational range. In addition, a tank high level overflow pipe is installed on the inlet weir tank and one of the three connected storage tanks that connect and drains to MH443, which is upstream of the LSIV (As-Built Drawing M502, Appendix A). The overflow piping is sized to allow overflow of more than the 500 gpm flow rate from the MH130A pump (which is not directly controlled by the main LTST control unit).

The new LSIV submersible pump is set to produce the full design flow rate of 1,500 gpm at a level below which any of the four 50-hp King County pumps activate based on readings from the pressure transducer mounted in the LSIV (see Drawing K501 in Appendix A). The new LSIV submersible pump is set to turn off at a level that is just above the manufacturer's minimum recommended submergence depth in order to avoid motor overheating or dry run conditions.

1.4.2 LTST System Instrumentation and Controls

Design of the LTST system includes associated instrumentation and controls to monitor and record relevant data and to control the pumps, valves, and filters. Instrumentation is used to conduct the following monitoring and control functions:

- Real-time monitoring of water levels is performed at the lift station inlet vault using a pressure transducer and at the inlet weir settling tank and the set of three storage tanks using ultrasonic sensors.
- Inlet stormwater flow rate and total flow for both MH130A and LSIV are monitored by real-time monitoring and a data recording system. The mounting locations of the flow meter displays are above ground and amongst the electrical panels mounted to the back of the LS431 building (east side of the building).
- With real time monitoring of water levels and flow rates, the three system PLCs turn the LSIV pump on and off, as appropriate, and control flow rates using VFDs to pump and treat up to the full design flow rate of 1,500 gpm when flows are available and when the pump at MH130A is not operating. At the same time, the VFDs are controlled to avoid overfilling either the inlet weir tank or the three connected storage tanks. When the pump in MH130A is providing 500 gpm to the treatment system, the LSIV pump will provide up to 1,000 gpm to meet the full design flow rate of 1,500 gpm, if sufficient water is available in the LSIV. Recirculated (re-treated) flow volume, discharge flow rate, and total discharge flow volume is monitored by the data recording system.
- Backflushing of sand filters is triggered based on maximum time interval and differential pressure rise. PLCs control backflushing and allow only one of the three sand filter systems to backflush at a time. This helps to minimize spikes in treatment system flow rate above the 239 gpm design backflushing flow rate per vessel. The duration of backflushing is adjustable based on the amount and quality of suspended solids encountered.
- Continuous monitoring and recording of influent and effluent turbidity (which correlates to TSS and, thereby, also to PCB concentration) is provided. Automated recirculation is

triggered if filtered stormwater exceeds a selected turbidity setpoint. The initial control setpoint has been set at 5 nephelometric turbidity units (NTUs).

- Monitoring and recording of effluent pH is provided. The NBF facility is covered under the Industrial Stormwater General Permit issued by Ecology, which establishes a pH benchmark range of 5 to 9 standard units. Data from the previous STST CESF system has indicated that influent and effluent pH levels are consistently within that range. Therefore, there are no automatic shutdowns of the LTST system that are triggered by the pH measurements.
- Remote calling/texting alerts operation personnel of any abnormal conditions including long periods in recirculation mode, abnormally high effluent turbidity, pH outside the range of 5.5 to 8.5, high tank water levels that are not corrected within an allowable time, and evidence of pump failure.
- The LTST system includes four independent PLC-controlled chitosan metering pumps. Static mixers are provided in the lines just downstream of the chitosan injection points in order to thoroughly mix the chitosan into the stormwater.
- The three PLCs are programmed to conduct alternating starts of the pumps for each sand filter system. The alternating starts allow the sand filters to balance their operational hours.
- Solids sampling filtering assemblies, constructed of steel and containing 1-micron nominal rated filter bag elements, are connected into the piping at the MH130A influent line, the LSIV influent line, and the LTST system effluent line. Also, downstream of each filter assembly is a flow totalizer, which records the total filtered volume of stormwater.

The LTST system, including instrumentation and controls, was installed generally as planned and as described in the *100% Design Report* (Landau Associates 2011c). Minor system modifications are noted below in Section 3.0.

1.4.3 Incorporation of EPA Green Remediation Policy

Consistent with the EPA Region 10 "Clean and Green Policy" to enhance the environmental benefits and sustainability of federal remediation programs at Superfund sites, Boeing incorporated green technologies into the LTST system design and construction planning. As noted in the "Clean and Green Policy," Region 10 intends to measure the cost differentials and environmental benefits associated with implementing their policy. To support this effort, a summary of all actions implemented consistent with the "Clean and Green Policy" is provided in Section 3.5.

1.4.4 System Reliability and Discharge Water Quality

The LTST system is designed to provide reliable operation and to have minimal downtime. With automated remote notification of alarm conditions, it is expected that any problems can be quickly addressed. The lessons learned during the previous STST startup were incorporated into the LTST system to minimize operational problems.

To address the unlikely event of pump failure, the LTST system supplier and operator, Clear Water, typically has spare pumps available and a full range of pumps are available through local rental companies. With the remote notification from the LTST system alarms and the available rental fleet of pumps, the system downtime following an unlikely pump failure should be minimal. Clear Water also maintains spares of all their general CESF process equipment (e.g., chitosan metering pumps, turbidity meters, valves, instrumentation). Therefore, system operational repairs that may be required can generally occur within 12 hours. The goal for operation of the LTST system is to achieve no more than 3 percent downtime on an annual basis.

The SAP for LTST operation has been prepared to monitor the effectiveness of stormwater treatment and to monitor the quality of stormwater discharged to Slip 4 (Landau Associates 2012). A summary of the sampling to be performed for the LTST system is provided in Table 1b.

1.5 OTHER EVALUATIONS AND DOCUMENTS

Boeing has conducted additional evaluations related to stormwater treatment at NBF and has prepared documents for submittal to EPA that are outside of the specific ASAOC SOW items. A full listing of the document submittals required by the ASAOC is provided in Table 2, and select additional documents are also listed in Table 2. It should be noted that the ASAOC SOW required submittal of a Monitoring Plan for Water and Solids in Influent and Treated Effluent. EPA determined that this work was duplicative of work covered in Task 3A (such as the SAP and the operation and maintenance manual); thus, no documents with this specific title were prepared pursuant to Task 3C.

Boeing has also continued to provide EPA with monthly progress reports starting in October 2010 (following the signing of the ASAOC by Boeing and EPA). These monthly reports have chronicled all significant project activities; Boeing plans to continue submittal of these progress reports to EPA through the end of 2012. The additional evaluations and project documents have been described in the monthly reports. Additional documents not specifically called out in the ASAOC have included bed load sampling and biofilter media bed pilot study testing.

1.5.1 BED LOAD SAMPLING

Bed load sampling was required under the terms of the ASAOC. The goal of bed load sampling was to collect solids that are transported along the bottom of the storm drain system piping and may not be readily sampled by other previously employed sampling techniques in the storm drain system (such as sediment trap sampling, in-line solids filtration, and flow-weighted auto-composite water sampling). Bed load materials have particle sizes or a density that do not normally allow movement far above or for long distances out of contact with the bed at the bottom of the storm drain pipe. The results from the bed load

samplers deployed from March through May 2011 (Landau Associates 2011d), and in follow-up bed load sampling conducted June through July 2011, indicate that the sediment trap and filtered solids samples are adequate to evaluate PCB concentrations in solids in the storm drain system. Solids that travel as bed load within the storm drain system did not appear to have significantly higher concentrations than samples collected in sediment traps or as filtered solids.

1.5.2 Media Bed Pilot Study

One of the potential stormwater treatment technologies considered and evaluated for LTST was the use of a biofilter treatment system that uses a mix of media that would act to filter out PCBs from stormwater. It was later determined that there was not adequate time to test and design a biofilter media bed system given the schedule required by the ASAOC. There is still potential interest in evaluating the effectiveness of such a system in the event additional stormwater treatment may be needed at NBF or to determine if it could be effectively integrated as part of the LTST. Therefore, a final biofilter media pilot study memorandum was prepared and submitted to EPA (Geosyntec Consultants 2011d), which incorporated comments provided by EPA on a previous draft memorandum regarding procedures for a media bed pilot study. A plan for monitoring the media bed pilot study has been incorporated into the sampling and analysis plan for LTST (Landau Associates 2012).

2.0 PERFORMANCE STANDARDS AND CLEANUP GOALS

LTST system performance standards were developed during the design process (including the 60% and 90% design report submittals) and final performance standards are summarized in the *100% Design Report* (Landau Associates 2011c). Treatment goals for LTST were listed in the ASAOC for PCB concentrations in both whole water and in solids discharged in stormwater. The treatment goal for PCBs in solids has been actively reviewed and redeveloped with EPA. LTST system performance standards and cleanup goals are described in more detail in the following sections.

2.1 LTST SYSTEM PERFORMANCE STANDARDS

As described in the *100% Design report*, the design basis and performance standards for the LTST system include:

- The LTST system was constructed adjacent to and south of King County LS431. The system treats all dry weather base flows from the LSIV and from MH130A (which collects a portion of onsite North Lateral drainage) and preferentially treats wet weather storm flows from MH130A and, as capacity allows, additional flows from the LSIV (sometimes referred to in prior LTST documents as OWS421, based on Boeing's identification number). The LTST system was designed to capture and treat approximately 91 percent of onsite storm flows to MH130A (12.8 acres) and 100 percent of onsite and offsite dry weather base flows to the LSIV (approximately 106 acres onsite plus approximately 191 acres offsite). Additional treatment of low storm flows at the LSIV is provided as capacity is available. The system is set to operate at full capacity (1,500 gpm) whenever sufficient stormwater is present.
- The submersible pump at MH130A (initially used for the STST System) is connected to a new force main and routes base and wet weather storm flows from MH130A directly to the LTST system. When the LTST system has capacity beyond that which is required to treat the flows from MH130A, additional storm flows from the LSIV will be pumped to the system.
- Offsite stormwater that formerly drained to the North Lateral (41.1 acres of King County drainage) was rerouted at a storm drain manhole (54-inch diameter) that is located 16 ft upstream of MH178. The rerouted line goes through NBF and terminates at SDMH421, which is upstream of the LSIV. The reroute minimizes overflow bypass at MH130A and allows preferential capture and treatment of onsite North Lateral storm flows. The reroute also allows some treatment of offsite North Lateral flows (as well as other laterals) at the LSIV when capacity allows.
- Dry weather base flows from onsite and offsite laterals discharging to the LSIV are pumped to the LTST system.
- All treated flows from the LTST system are discharged to the Lift Station outlet structure, located downstream of the LSIV and the King County Lift Station pumps.

NBF onsite and offsite drainage basins that drain to the LSIV and are treated by the LTST system, up to its maximum 1,500 gpm, are shown on Figure 2. The boundary of the specific drainage basin that drains to MH130A and is preferentially treated at the LTST system is also shown on Figure 2.

Record drawings prepared by Landau Associates showing the as-built state of the LTST system are provided in Appendix A. Record drawings prepared by URS Corporation showing the as-built state of the storm drain reroute and are provided in Appendix B.

2.2 LTST TREATMENT GOALS

Interim Goals for the LTST facility were set by EPA in the ASAOC as follows:

- Water discharged to Slip 4 must be below the Aquatic Life – Marine/Chronic water quality standard of 0.030 µg/L total PCBs. Boeing conducted (AMEC Geomatrix Inc. 2011) and EPA approved (EPA 2011a) a salinity study in Slip 4 that demonstrates that the use of the Marine/Chronic water quality standard for total PCBs is appropriate.
- In-line storm drain solids discharged to Slip 4 must be below 100 ppb dry weight total PCBs. This interim goal shall be used as a point of departure in considering whether the long-term interim goal for in-line storm drain solids discharged to Slip 4 should be modified in accordance with the AKART.

An analysis of AKART was prepared to present the evaluation of stormwater treatment alternatives. The AKART Analysis Report (Geosyntec Consultants 2011a) it was describes how the EPA interim goal of solids (100 ppb dry weight total PCBs) was not a reasonable or technically achievable goal. Therefore, Boeing brought a Stormwater Expert Panel (Panel), jointly with Geosyntec Consultants, into the project to evaluate an alternative to the interim goal for solids that would be protective of Slip 4 sediment from recontamination. The expert Panel members consist of Jon Jones, P.E., of Wright Water Engineers; Dr. Michael Stenstrom from UCLA; and Dr. Robert Pitt from the University of Alabama. The Panel conducted an analysis of the methodology used and proposed a seven-step approach to estimate a site-specific mass load-based interim goal in a memorandum to EPA (Jones et al. 2011). The approach included:

- The anticipated post-LTST loading of solids and associated PCBs from NBF to Slip 4 was estimated based on existing available monitoring data and calibrated hydrologic model output, assuming steady-state (average) conditions for NBF storm drain base flows and storm flows (both treated and bypassed).
- The effect of varying settling distances in Slip 4 for different sized particles can be accounted for by inclusion of percentage (by mass) of solids settling in Slip 4 as a parameter.
- A mass balance of PCB solids depositing in Slip 4 over the course of a year fully mixed in 10 cm of clean sand cap (to protect the benthos) was computed.
- A time series plot of average surface sediment PCB concentrations in Slip 4 over a 50-year period was developed.
- Computed Slip 4 average surface sediment PCB concentrations were then compared with the Washington Sediment Management Standards (SMS) sediment quality standards (SQS). The SQS is 12 milligrams per kilogram (mg/kg) organic carbon normalized; the dry weight criteria considered by Ecology to be equivalent to the SQS is 130 micrograms per kilogram (µg/kg) total PCBs (1.08% TOC). Using the time series plots, the number of years until the

State standard 130 µg/kg dry weight sediment criteria would be exceeded was determined for a number of different scenarios.

- Use of the time series plots and estimates of the mass of solids that would exit Slip 4 based on particle size to establish an allowable average annual total filterable PCBs mass load (grams per year), such that State dry weight criteria is not exceeded within 50 years.
- In order to avoid exceedances of this average annual PCB load during above-average rainfall years, this load was divided by average annual runoff volume to compute a mass load-based allowable concentration (µg/L total filterable PCBs). For compliance assessment purposes, this interim goal can be compared annually with a volume-weighted average of the lift station discharge concentrations.

The recommended alternative interim goal presented in a subsequent memorandum, *Amended Monitoring Approach Recommendations for North Boeing Field Long-Term Stormwater Treatment System* (Jones et. al. 2012) is as follows:

- A FWAAC for total PCBs in water of 0.018 µg/L.

EPA approved the amended monitoring approach for the alternative solids interim goal in a letter dated January 19, 2012 (EPA 2012). Monitoring has been conducted since LTST operation began to provide data that can be compared to the water interim goal of 0.030 µg/L PCBs and the alternative solids interim goal of a yearly average of 0.018 µg/L PCBs in water.

These interim goals are to be met at the Point of Compliance (POC), also referred to as LS431, which is shown on the Updated Storm Drain System and LTST Sampling Locations (Figure 4).

3.0 TREATMENT SYSTEM CONSTRUCTION ACTIVITIES

Construction activities for the LTST system can be generally described as either relating to the conveyance of stormwater, or the treatment of stormwater. Glacier Environmental Services Inc. (Glacier) was contracted by Boeing to complete the elements of the project relating generally to the conveyance system and Clear Water was contracted to construct the treatment system. Glacier also constructed foundations for the treatment system tanks and equipment, and provided utility connections to the LTST system. A listing of Boeing's consultants and contractors who have performed a significant role in the work under the ASAOC is provided in Table 3.

The layout of the stormwater conveyance piping and the location of the LTST system are presented on Figure 5. The record drawings reflecting as-built conditions of the LTST system are included as Appendix A to this report, and provide details of CESF system equipment layout, piping, valves, and fittings. The record drawings showing the as-built conditions of the belowground stormwater conveyance system are provided in Appendix B.

3.1 CONVEYANCE SYSTEM CONSTRUCTION ACTIVITIES

Construction of the conveyance system was completed in general accordance with design documents prepared by Boeing and approved by EPA. When any notable deviations from the approved construction design documents were necessary, the issues were discussed between Boeing and EPA during construction. The modifications include adjustments to pipe materials selection and adjustments to the proposed alignment of stormwater conveyance piping to avoid conflicts with existing buried utilities. These changes relate to slight modifications in construction or materials, but do not have a significant impact on the overall design and do not impact the anticipated efficacy of the treatment system.

Construction activities for the conveyance system began in June 2011 and were completed in late October 2011. The alignments of the new storm drain lines that were constructed for LTST are shown on Figure 5. Conveyance system upgrades completed for this project include the following:

- Installation of approximately 2,000 linear feet (LF) of 24-inch diameter polyvinyl chloride (PVC) pipe to convey stormwater collected offsite to the LTST system.
- Installation of approximately 1,320 LF of 8-inch-diameter HDPE forcemain and 2-inch-diameter PVC electrical conduit to convey stormwater and facilitate future controls or electrical wiring to run from MH-130A to the LTST system.
- Installation of approximately 730 LF of 6-inch-diameter HDPE to facilitate future pilot studies for stormwater treatment.

As part of the final steps of the conveyance system, Boeing's site services contractor, PSC, performed the cleanout of the newly completed King County bypass storm drain. As that cleanout work

was finishing on October 26, Glacier cut into the old 24-inch line near the GTSP, just upstream of MH178, to connect the new bypass line. On that day, the segment of the old 24-inch north lateral storm drain just upstream of MH178 to the new bypass connection point was temporarily plugged with a pneumatic plug, and the new King County bypass line was operational. The following week Glacier permanently grout-sealed the old 24-inch line between the new connection point and MH178.

3.1.1 EARTHWORK

Glacier installed the three new groundwater conveyance system upgrades described above into the subsurface along the alignments presented on Figure 5. The earthwork activities included pavement preparation, trench excavation and temporary shoring, preparation of pipe bedding, installation of the piping, placement and compaction of backfill materials, and repaving the surface to match the surrounding area.

Several preparatory tasks were completed prior to excavating the utility trenches. These included cutting and removing the pavement within the trench alignment and installing a construction dewatering system to lower the groundwater level where excavation was anticipated to be below static groundwater levels. The contractors cut the pavement along the alignment with a saw cutter, removed the pavement where the trench was to be excavated, and exported the pavement for recycling. Glacier exported approximately 585 cubic yards of asphalt and 129 cubic yards of concrete to local recycling facilities. The deepest excavations were in locations where manholes were installed, and where burial depth was greater to maintain the slope of 0.1 percent specified to facilitate gravity flow of the 24-inch-diameter PVC pipe. Because the 24-inch-diameter PVC pipe conveys water by gravity, it slopes down from its origin in the parking lot west of the GTSP to where it connects at the LTST system. Although existing site topography provides some vertical relief toward the LTST system, a deepening trench excavation depth, reaching a maximum of approximately 10 ft below ground surface (BGS) was required in areas near the terminal end of that conveyance. Details of the construction dewatering system are provided in Section 3.1.3.

After the pavement was removed and the groundwater level lowered to facilitate excavation in unsaturated soil, Glacier began installation of the conveyance piping. Excavation and pipe installation were conducted at various locations along the piping alignment at various times depending on conditions encountered such as unknown utilities, road crossings, groundwater, etc. Glacier used trench shoring boxes to keep the excavations open during excavation and pipe installation. The shoring boxes were removed during the backfilling process. Backfilling and compaction were performed in accordance with design specifications and were verified by Mayes Testing Engineers Inc. In general, trenches were completed from bottom to top as follows: pipe zone bedding (4 inches below the pipe to 6 inches above

the pipe); gravel borrow (above the bedding up to 12 inches below final grade); 6 inches of crushed surfacing base coarse; 2 inches of crushed surfacing top course; and 4 inches of hot mix asphalt (HMA) 1/2 class PG 64-22. Backfill material was furnished to Washington State Department of Transportation (WSDOT) specifications and compacted to 95 percent of the maximum density. The pavement surface was graded and compacted to match the surrounding areas.

In the portion of the alignment between the LTST system and approximately 730 linear ft along the alignment to the north, all three conveyance pipes and the 2-inch electrical conduit were installed in the same trench. Heading northeast along the alignment, near building 3-352, Glacier installed a utility vault and terminated the 6-inch HDPE spare for future use in pilot studies for stormwater treatment. Farther north along the alignment, between Building 3-324 and the power substation just west of that building, the 8-inch HDPE force-main and 2-inch electrical conduit branch off of the main trench alignment and head east toward manhole MH-130A. Between this branch location and the parking lot west of the GTSP (to just upstream of MH178 in the North Lateral), the 24-inch-diameter PVC pipe is the only pipe installed in the trench.

The alignment described in design documents was followed with some modifications to routing when buried utilities were encountered. The most significant modification was for the 8-inch force-main routing stormwater from MH130A to the treatment system. The alignment was modified based on encountering buried electrical utilities, and the altered alignment can be seen on Drawings C295 and C301 in Appendix B. The modification does not affect the functionality of the system. Additionally, the original design specified the 24-inch diameter pipe to be HDPE. Because of the need to install more buried pipe bends than was anticipated during design (and the relative ease of installing PVC pipe bends in the trench versus thermally fused HDPE connections), Boeing requested approval from EPA to use PVC pipe. This request was approved prior to construction.

3.1.2 SOIL MANAGEMENT

The soil excavated during installation of the stormwater conveyances was temporarily staged onsite pending determination of whether it could be reused for backfill material, or would be exported for offsite disposal. Twenty individual stockpiles were generated and evaluated for geotechnical and environmental parameters. Mayes Testing Engineers Inc. performed geotechnical screening including proctor tests to evaluate whether the excavated soil would be likely to meet backfill requirements. Additionally, although the alignment was not excavated through areas where contamination was anticipated, Boeing contracted Landau Associates to collect composite soil samples from each soil stockpile for analysis for the presence of contamination and to help determine suitability for potential reuse onsite.

Stockpiles were sampled for the presence of petroleum hydrocarbons in the gasoline-, diesel-, and oil-range by NWTPH-G and NWTPH-Dx; for PCBs by EPA Method SW8082; and for metals (arsenic, cadmium, chromium, lead, and mercury) by EPA Method 6010B and 7471A (for mercury). Boeing evaluated the results and conservatively identified stockpiles acceptable for reuse. The analytical results of environmental soil screening are summarized in Table C-1 of Appendix C. The full set of laboratory analytical reports is also included in Appendix C. As indicated in Table C-1, approximately 1,050 cubic yards (approximately 1,785 tons) of the 3,455 cubic yards excavated was reused onsite for backfill. EPA approved offsite disposal of soil at Columbia Ridge Landfill in Arlington, Oregon [Resource Conservation and Recovery Act (RCRA) ID# ORD98717357] under the off-site rule (OSR). EPA Region 10 has a policy to conduct verification of continued acceptability (VCA) for facilities that have been previously found acceptable under the OSR. EPA issued a VCA for the Columbia Ridge Landfill for this project on June 27, 2011 and, since this verification is valid for 60-days, provided VCA again in August and October 2011. All soil that was not re-used onsite was exported to Columbia Ridge Landfill through the Alaska Reload and Recycle facility for use at Columbia Ridge Landfill as daily cover material. This quantity of soil was approximately 4,100 tons. A copy of the truck tickets is provided in Appendix I of this report.

Saturated soil was placed into a bermed and lined dewatering cell, where fluids were allowed to drain away from the soil toward a sump. Water generated from this process was treated by the dewatering fluids treatment system discussed in Section 3.1.3.

Temporary Erosion and Sediment Control (TESC) measures were implemented in the soil staging areas to prevent migration of soil. These measures included 6-mil plastic liners placed under and over soil stockpiles; creating berms with ecology blocks and plastic liners around the stockpile staging area; and continuous attention to housekeeping in the area by using brooms, shovels, and a street-sweeping vacuum truck. Boeing's internal foreign objects and debris (FOD) program requires constant monitoring for debris or soil on ground surfaces that could be tracked onto the flight line in crevices of vehicle tires. The frequent monitoring by Boeing employees passing by the area resulted in prompt notification of untidy conditions and quick cleanup.

3.1.3 Construction Dewatering and Dewatering Fluids Treatment

Excavation was anticipated to extend below the groundwater level, which ranges from approximately 5 to 10 ft BGS along the alignment. In order to maintain safe and effective working condition in excavations, a dewatering system was constructed to extract groundwater near the trench in strategic locations. Twelve dewatering wells were installed along the alignment, as presented on Figure 5. Installing dewatering wells is preferred to pumping water directly from an open excavation.

The well screen and filter pack of a properly installed dewatering well develops an effective filter so that water removed is not laden with sediment. The dewatering well system makes subsequent water treatment more effective, and also prevents soil instability that can arise when pumping from an open excavation. Pumps were moved from well to well, as needed, to dewater sections of the trench where work was occurring. The wells were connected to the dewatering fluids treatment system (DTS) with aboveground HDPE pipe.

The DTS was designed and operated to meet King County wastewater discharge criteria. Treatment included particle sedimentation in an under-over weir tank, CESF, and a final polish with granular activated carbon (GAC). The under-over configuration of a weir tank allows the inlet bay to capture floating product, if oil enters the system. The DTS utilized CESF for PCB removal because this technology has proven effective at this site to reduce solids and PCB concentrations in stormwater. After CESF treatment, if the turbidity remained above 5 NTU, the system would recycle the water through the system for additional treatment. The system, automatically operating in recycle mode, would pass the water through the GAC and discharge to the sanitary sewer only if the measured turbidity of the treated water fell below 5 NTU.

King County approved the design approach and conducted a physical inspection of the DTS system on July 1, 2011. King County authorized Boeing to treat dewatering fluids at the DTS and discharge the treated water to the sanitary sewer. A copy of this discharge authorization (827-01) is included in Appendix D. The discharge authorization required that PCBs in water be less than 0.27 µg/L, that pH be between 5.5 and 12 pH units, that fats oils or grease (FOG) be less than 100 mg/L, and that the total discharge for one day be less than 100,000 gallons. PCB monitoring was required for Aroclors 1016, 1242, 1248, 1254, 1260, 1221, 1232, and 1262.

In addition to the physical inspection of the system by King County representatives, the discharge authorization required a demonstration period of 5 days. This system demonstration occurred on July 1, 5, 6, 7, and 8, 2011. A total of 82,888 gallons of water was treated during this demonstration and treated water met all discharge criteria. Discharge of treated water to the sanitary sewer began on July 9, 2011.

Flow and pH monitoring was performed onsite daily, when the system was in operation. For PCB monitoring, Landau Associates' field representatives collected a water sample each week to characterize discharge conditions, and another sample to evaluate the effectiveness of the GAC. The weekly samples were analyzed for the Aroclors listed above with a reporting limit of 0.1 µg/L for each Aroclor.

Table D-1 in Appendix D summarizes the monitoring data for the system. As indicated in the table, all self monitoring was performed at the appropriate frequency, and discharge criteria were met throughout operation of the DTS.

In July 2011, Glacier discovered that proper dewatering of the excavations would require higher pumping flow rates than initially estimated, and might require pumping more than the 100,000 gallons per day the DTS was authorized to treat and discharge. In addition, the DTS was used for treatment of water generated from the NBF/GTSP interim action fenceline soil excavation, further limiting the DTS treatment capacity available for the reroute dewatering. Boeing requested permission from EPA to allow treatment of some dewatering fluids at the STST, which treated stormwater at the site. The STST had the treatment capacity to meet the anticipated increase in flow. At the time of the request, dewatering was already complete at DW-1, DW-2, and DW-3. Water samples were collected from dewatering wells to evaluate treatment options. A summary of the analytical results is provided in Table D-2 of Appendix D. Based on the performance of the STST system since the start of its operation on September 15, 2010, and the analytical results summarized in Table D-2, on July 22, EPA approved the request and allowed the use of the STST system to treat water extracted from dewatering wells DW-5, DW-6, DW-7, DW-9, DW-10, DW-11, and DW-12. Water from wells DW-4 and DW-8 was not considered suitable for treatment at the STST system and was treated at the DTS system. A total of 367,800 gallons of water from dewatering wells DW-5, DW-6, DW-7, DW-9, DW-10, DW-11, and DW-12 was processed at the STST during the project.

3.2 ACCESS AND PERMITTING

The City owns the land where a portion of the King County storm drain bypass conveyance alignment is located. Boeing and the City negotiated a temporary construction easement to allow installation of the conveyance line in this proposed alignment.

As described in the *100% Design Report*, because the work associated with the LTST was conducted under an ASAOC with the EPA, Boeing was not required to apply for or to be granted construction permits from state or local agencies. However, Boeing was required to meet the relevant substantive requirements of applicable regulations. A listing of the permits that might normally apply to this type of construction project, and associated relevant substantive requirements, were described in the *100% Design Report* and are summarized below:

- **Grade and Fill Permit** – Applicable for installation of new storm drain piping and manholes, including a State Environmental Policy Act (SEPA) checklist for excavation of more than 500 cubic yards of soil. Boeing did not apply for or obtain this permit from King County or the City, but Boeing did comply with the substantive requirements of the permit [i.e., followed the applicable City and King County standards for stormwater conveyance design and will submit 100% design drawings and record (as-built) drawings to the City and King County].
- **Land Use Permit** – Can apply to installation of tanks, pumps, and other large equipment in land area not formerly used for such equipment. Boeing complied with the substantive requirements of the permit such as noise ordinances and traffic safety.

- **Side Sewer Permit** – Applicable to modifications of storm drain structures. The side sewer permit process is a method that the City uses to keep accurate records of storm drain utilities. Similar to what is stated above for the grade and fill permit, Boeing did not obtain the permit(s), but did follow the applicable City and King County standards for stormwater conveyance design and will be submitting the 100% design drawings and record (as-built) drawings to the City and King County, so that they can update their utility records, as appropriate.
- **Construction Stormwater Permit** – Not applicable because less than 1 acre was excavated. However, Boeing and its contractor complied with Best Management Practices (BMPs) applicable to Ecology's Construction Stormwater General Permit and with the requirements for TESC in its existing Stormwater Pollution Prevention Plan (SWPPP) under the Industrial Stormwater General Permit.
- **Electrical Permit** – Electrical permits through Washington State are applicable to the new electrical service lines to be installed. Because acquiring electrical permits was not expected to cause a significant delay to the project, and because of the desire to avoid any electrical safety problems, Boeing obtained all necessary electrical permits through its contractors for power supply to the CESF system and associated pumps and equipment. Electrical permits are described in Section 3.6 and copies provided in Appendix G.
- **Federal Aviation Administration (FAA) Permit** – Applicable when any structures or equipment exceeds specified height restrictions within a certain distance from the airport runway. The LTST construction work did not exceed those height restrictions. Boeing submitted a Notice of Proposed Construction or Alteration [Federal Aviation Administration (FAA) Form 7460-1] to King County on June 16, 2011.

3.3 LTST EQUIPMENT INSTALLATION AND STARTUP

Only a few minor changes occurred during system installation, compared to the system presented in the *100% Design Report* (Landau Associates 2011c) and as summarized above in Section 1.4. The as-built plan view of the system and associated equipment is shown on Drawing C505 (Appendix A). Minor changes include the following items, which may be found on the record drawings in Appendix A.

- The two strainers at the inlet of the inlet weir tank were changed to a single strainer located after the inlet weir tank and prior to the pre-treatment pump. This change of location for the strainer reduces the loading of solids in the strainer by utilizing the inlet weir tank to remove the settleable solids.
- Installing the pre-treatment pump so the inlet of the pump is orientated toward the weir tank. This moved the horseshoe-piping bend and associated friction losses from the suction side to the pressure side of the pump. The pump has greater capacity to handle pressure losses on the discharge side than it does on the suction side.
- Installation of additional flex couplings on the storage tank inlets and the sand filters. These were added to remove minor angle discrepancies when connecting the ridged PVC piping to the various system components.
- Addition of check valves on the force main pressure lines coming from MH130A and the LSIV after the filter bag and sampling port branches. This prevents gravity flow back of combined effluent water contained within the weir tank and above the inlet port elevations through the filter bag assembly when the MH130A and LSIV pumps are off and the filter bag

assemblies' shutoff valves are open. Components to the check valves are currently on back order from the manufacture and will be installed when received.

- Addition of check valves on the sampling port branch and located after the filter bad and flow totalizer meters on the MH130A and LSIV forcemains. Minor backflow of water in the overflow line had been occurring when the pumps turn off.
- In order to better quantify both treated stormwater flows as well as high storm flows bypassed by the King County Lift Station, a Marsh-McBirney FLO-DAR® Radar Area/Velocity Sensor has been mounted above the stormwater flow at the point of compliance (at the entrance to the 48-inch LS431 outlet pipe, downstream of the CESF effluent discharge). Flow is measured continuously at 1-minute intervals. Data from the sensor is collected and logged by a Hach FL900 Series Flow Logger, and the automated flow-weighted composite sampler is programmed to collect aliquots of stormwater based on the predetermined volume interval programmed into the flow logger. More details regarding the Flo-Dar unit are provided in the SAP (Landau Associates 2012).

The sand filters were installed as specified in the design, including the use of garnet as part of the sand filter media mix. The use of garnet was determined to be an important component of the sand filter media in order to achieve the highest efficiency for PCB removal. A specification sheet for the sand filter system and media that were installed is provided in Appendix E.

The general schedule for Clear Water to construct the CESF system was to order equipment in June and July, mobilize the equipment and control unit to the site in August (including the five weir and storage tanks acquired by Landau Associates), and to complete piping connection of the equipment in September. The electrical accident and injury on September 18 (described below in the next section) delayed initial testing of CESF pumps and equipment until a 200-amp temporary partial power supply from the 3-380 paint hangar building was provided on October 12. Clear Water was unable to complete final electrical connections and system testing until the week of October 24, following full power supply connection to the new transformer on Sunday, October 23. After final CESF instrumentation connection and performance testing that week by Clear Water, and testing of the Flo-Dar flow meter at the lift station effluent vault that week by Landau Associates, the LTST CESF system was fully operational to treat 1,500 gpm by the established deadline of Friday October 28, 2011. A schematic diagram of the LTST system components is provided as Figure 6. A photo showing an overhead view of the completed LTST CESF system equipment is provided on Figure 7 for visual reference.

Final connection of LTST-related monitoring equipment (i.e, the two CESF inlet and one CESF effluent filter bag housings) was completed the week of October 31 in preparation for the first round of LTST monitoring that was scheduled for the first full week of the month, starting November 7, 2011. The first LTST sampling event was completed, as scheduled, on Friday November 11th. Stormwater monitoring locations and sampling equipment are visible from the overhead view on Figure 7 and are noted on Figure 8.

3.4 LTST PROJECT CHRONOLOGY

Figure 9 shows a Gantt chart that includes major milestones and events. The timeline set forth in the ASAOC was generally adhered to with some exceptions. The original deadline for LTST facility operation was September 30, 2011. On Sunday, September 18, an electrical worker was shocked when the contractor attempted to connect the LTST to the NBF site electrical service. All work to supply power to the LTST was halted to allow for the investigation of the incident to proceed and to ensure safe working conditions prior to resuming work. Boeing requested an extension to the September 30, 2011, completion deadline to October 28, 2011. EPA approved that extension request in a letter dated September 29, 2011 (EPA 2011b). Final testing of the LTST treatment system was conducted the week of October 23, and the LTST system began continuous treatment on October 28, 2011.

The Removal Action/Stormwater Treatment Completion Report was required to be submitted within 45 days of completion of all work required by the ASAOC, and originally would have been November 14, 2011 had the LTST facility operation began according to the original schedule. Due to delay of the start of LTST operation, in a letter dated October 13, 2011, Boeing requested an extension of the Completion Report deadline to December 12, 2011. EPA approved that extension request in a letter dated October 17, 2011.

3.5 GREEN REMEDIATION POLICY

Consistent with the EPA Region 10 "Clean and Green Policy" to enhance the environmental benefits and sustainability of federal remediation programs at Superfund sites, and as noted above in Section 1.4.3, Boeing incorporated green technologies into the LTST system design and construction.

The following specifications were included in the construction contract as an exhibit of special conditions, which is provided in Appendix J of this report:

1) Green Policy: The contractor shall use technologies and practices that are sustainable in accordance with EPA Region 10 Green Cleanups (http://yosemite.epa.gov/R10/extaff.nsf/programs/greencleanups), with the exception of the use of concrete utilizing coal combustion products (see EPA suspension of coal combustion products partnership program, http://www.epa.gov/osw/partnerships/c2p2/index.htm). The contractor shall report on the use of these technologies and practices, including the associated quantities of materials reduced, reused, or recycled as a direct result of these practices, for all remedial activities conducted under this contract after project completion.

2) Cleaner fuels, diesel emissions controls and retrofits, and emission reduction strategies: For diesel-powered equipment exceeding 50 hp, the contractor will utilize construction equipment rented from a local supplier, and will request the rental of construction equipment meeting Tier 4 standards. If Tier 4 construction equipment is not available, equipment will be requested that meets at least the Tier 3 standards. If equipment meeting Tier 4 or Tier 3 standards is not available, then other equipment may be considered if emission devices are added such as oxidation catalysts and/or particulate filters. Equipment with a higher tier

emission standard will not be used if the only available selection is larger equipment that would use more fuel or result in a higher rate of emissions.

3) Clean Fuel: Cleaner fuels will be used in all diesel-powered equipment. Diesel fuels to be used may include biodiesel blends (e.g., B5 or B20). Ultra low sulfur diesel is now legally required for all applicable equipment (this is not a contract requirement).

4) Greenhouse gas emission reduction technologies: Diesel-powered equipment should be used where available instead of gas-powered equipment. The Contractor shall minimize idling to control air pollution and reduce fuel usage. This shall include turning off all diesel engines on construction equipment greater than 50 hp when not in active use (e.g., on standby for more than 5 minutes).

5) Water conservation and efficiency: If water consumption is necessary (e.g., for dust suppression), water conservation measures will be utilized where feasible.

6) Industrial material reuse or recycling within regulatory requirements: Where feasible, the contractor shall recycle all scrap construction materials, wastes from the construction trailer, and other materials generated during the course of construction activities.

7) Environmentally Preferable Purchasing: Where available, all materials purchased will have Post-Consumer Recycled (PCR) content. Ductile iron pipe and fittings shall be made from 85-90 percent recycled metals.

8) Environmental Management System (EMS): Practices such as reducing the use of paper by utilizing electronic transmittal of project documents and implementation of waste reduction and recycling programs at the work site shall be implemented. The contractor shall also provide all recycling services possible through local waste management services for the site trailer, such as waste management recycling and compost containers for site workers. Workers will also be encouraged to minimize waste where possible, e.g., using refillable water bottles instead of single-use bottled water.

9) The Contractor shall purchase and use local materials (such as asphalt and backfill material) where available.

These practices were implemented to the greatest degree practicable as described below.

- **100% use of renewable energy (green power), and energy conservation and efficiency approaches including EnergyStar equipment –** Boeing purchased 100 percent renewable energy through the Seattle City Light *Green Up* program. Boeing will purchase the power as an "Event" for the estimated 200,000 kilowatt-hours (kWh) required to operate the LTST system for each year of operation. Boeing purchased the first "Event" in November 2011 for $3,000, and the billing request, purchase agreement, and invoice are included in Appendix F. The power use was estimated from a maximum system power draw of 120 hp (90 kW) and an average system utilization of 25 percent considering both estimates of base flow and storm flow. The LTST system was designed with high quality pumps and efficient motors. EnergyStar certification was not found to be available for pumps and other equipment required to run the LTST system. However, VFDs are installed to run the pumps efficiently as described above.

- **Cleaner fuels, diesel emissions controls and retrofits, and emission reduction strategies –** Requirements regarding cleaner fuels and emission reduction strategies were included in the contractor specifications. Glacier obtained a new wheel loader for the duration of the project that met EPA Tier 4 emission standards. It featured a diesel particulate filter (DPF) and diesel oxidation catalyst (DOC) to reduce particulate matter (PM) and nitrogen oxides (NOx). Other equipment used met Tier 3 standards. All equipment operators followed a strict policy

of limiting equipment idling to 3 minutes and dump trucks were turned off during loading operations.

- **Water conservation and efficiency approaches including WaterSense products –** Backflushing of sand filter vessels is performed using filtered stormwater and no supplemental water (i.e., potable water) is used as part of the LTST system. Even the non-routine removal of settled solids from weir and storage tanks is to be performed with a vacuum truck without use of a supplemental water source, although a small quantity of water may be used for tank clean-out if determined to be necessary for effective solids removal.
- **Industrial material reuse or recycling within regulatory requirements –** The large steel enclosure for the NBF LTST system control unit and some of its components are equipment from a previous project and were refurbished for reuse on this project. Project dewatering operations required conveyance of groundwater nearly 2,000 ft across the site to the DTS area. Glacier rented HDPE pipe to convey this water, rather than purchase and dispose of new materials.
- **Recycling of materials generated at or removed from the site –** A total of approximately 1,250 tons of concrete and asphalt were transported to a concrete recycling facility (Renton Concrete Recyclers in Renton, Washington) or Miles Industries/Woodworth's in Lakeview for recycling. All excavated suitable soil that was tested and deemed acceptable for reuse was used as backfill for pipe trenching work, to the extent possible. Based on visual estimations of soil stockpile size, and tracking which stockpiles were reused at the site, it is estimated that 1,050 cubic yards of soil (approximately 1,575 tons) was reused during the project as backfill material. As discussed above, a total of approximately 4,100 tons of soil was shipped offsite to the Waste Management Columbia Ridge Subtitle D Landfill for disposal via rail from the Alaska Street Reload and Recycling Facility. Shipment by rail reduces single-truck traffic to the landfill, and soil was used as daily cover. Paper and cardboard generated onsite during construction was transported back to Glacier's home office where it was collected by Waste Management to be recycled.
- **Environmentally Preferable Purchasing –** The general contractor used local suppliers for import backfill materials and only when onsite excavated soil could not be reused. Log books and other paperwork associated with the LTST system operation and maintenance incorporated post-consumer recycled content to the extent reasonably available. The ductile iron pipe and fittings installed in the system are made from recycled metals.
- **Environmental Management System (EMS) practices–** Equipment monitoring and data recording is being done electronically. All data is being transmitted electronically and being distributed via email to reduce paper usage to the extent possible. In addition, Boeing has prepared electronic submittals to EPA for the documents under this project, and avoided the use of paper copies/submittals, to the extent allowed by EPA under the ASAOC. Glacier personnel were provided with refillable water bottles and water coolers to limit waste. Waste from Glacier's office trailer was minimized by recycling efforts and electronic communications. Glacier provided electronic submittals and received electronic approvals from Boeing for material submittals, greatly reducing paper usage. Glacier's project management coordination and communication was handled electronically whenever possible.

In addition to the standard EPA green technologies listed above, the LTST system incorporated the following technologies and practices listed below.

- Motorized and automated discharge valves are installed on the sand filter units that are throttled back only during the backflush cycle to create the necessary higher backpressure. In doing this, the need for constant backpressure is eliminated, which, in turn, reduces the required horsepower of the pumps and overall operational power requirements.
- The natural chitosan polymer used in the CESF process (chitin) of the LTST system is produced from waste shrimp and crab shells, rather than a synthesized chemical or a product of petroleum processing.
- The CESF process generates a smaller amount of waste products that contain PCBs and that need to be disposed of at a landfill, relative to other potential treatment technologies (e.g., GAC, media filtration).
- VFDs are used to control the LSIV pump motor as well as for the CESF pre-treatment pump and three transfer pumps. The use of VFDs for pump motor controls help to reduce power usage by running the pumps only at the speed necessary for the system's need at that time.

The following table summarizes the economic impacts of implementing these green policy practices during this project:

GREEN PRACTICE	COST DIFFERENTIAL TO IMPLEMENT GREEN PRACTICE	NOTES
Purchasing Green Power	Additional Cost of $3,000	1
Using Low-Emissions Heavy Equipment	No additional cost	2
Recycling Concrete & Asphalt	Savings of $31,500	3
Re-using Soil Onsite	Savings of $78,500	4
Renting HDPE for the Temporary Dewatering System to Promote Reuse of Material	Negligible Difference	5

Notes:

1. The purchase price of $3,000 is the estimated difference between the base cost of traditional power and the higher-priced renewable power for the estimated 200,000 kWh.
2. Earthwork contractor has a special preferred agreement with Hertz Equipment Rental to rent Tier 4 heavy equipment at no additional cost over traditional equipment.
3. 1,250 tons of concrete and asphalt debris; typical disposal fee is approximately $35/ton and the typical recycling fee is approximately $9.75/ton; recycling results in a net savings.
4. Approximately 1,575 tons were reused at the site as fill material. Assuming typical disposal cost of $35/ton, approximately $55,000 was saved by reusing the soil. Additionally, assuming a typical cost for importing backfill of $15/ton, approximately $23,500 was saved by offsetting the backfill import requirement.
5. Pipe rental cost approximately $10,500. Assuming a typical unit cost for 6-inch HDPE of $5.25/linear foot, purchasing 2,000 ft of HDPE is approximately equal to renting.

3.6 PROJECT QA/QC

During construction, soil density testing was conducted to verify project compaction requirements were met. Mayes Testing performed 248 soil density tests in the field, and all were within specification requirements (95 percent for the top 4 ft and 90 percent below the top 4 ft).

Electrical inspections were performed and permits were acquired through Washington State Department of Labor and Industries. The electrical work performed by Pacific Crest Electric as a subcontractor to Glacier Environmental was completed under Permit No. 2000794E. The final inspection was approved complete on October 24, 2011. A summary of the permit inspections is available at the Labor and Industries website, and a copy of that summary is provided in Appendix G. The electrical work performed by Unity Electric on the CESF system as a subcontractor to Clear Water was also inspected by Labor & Industries on October 12, and a copy of the electrical work permit (No. 2024393K) for their system is also provided in Appendix G.

A performance evaluation was conducted during startup of the treatment system. On October 28, a final inspection was performed and a moderate-sized rainfall event occurred such that peak flow rate capacity performance of the system could be tested. The lift station pump was observed to operate at a maximum flow rate between 1,100 and 1,200 gpm, as compared to the design maximum flow rate capacity of 1,450 gpm. With stormwater flow from MH130A at approximately 470 gpm when that pump was operational, the system still had the ability to pump 1,500 gpm when MH130A was pumping. The reduced capacity of the LSIV pump was determined to be that the LSIV pump draws slightly higher amperage than the maximum range of the VFD that was installed to control that pump. During construction, a different pump than the one originally specified was approved for use without realizing that it would not be fully compatible with the VFD. A replacement VFD with a matching higher amperage range rating was installed on November 7, 2011, to allow the full design pumping flow rate control range.

There are only limited monitoring results as of the writing of this report to compare with the performance goals and cleanup goals described above in Section 2.1 and Section 2.2, respectively. However, the preliminary results appear to confirm the ability of the LTST system to meet these goals. During the period from November 1 through January 31, 2011, approximately 50.5 million gallons of water were treated by the system. Average measured effluent turbidity from the LTST CESF system during this period has been less than approximately 2 NTU. Water samples of the LTST effluent through December 27, 2011 have been non-detect for PCBs at a reporting limit of 0.010 µg/L for each Aroclor. In addition, four out of five flow-weighted composite water samples collected at the point of compliance (LS431) through December 27, 2011 have been non-detect for PCBs at a reporting limit of 0.010 µg/L for each Aroclor, with only one storm sample measured at a concentration of 0.025 µg/L (which is less than the 0.030 µg/L marine chronic water quality criterion). The FWAAC will be calculated at the end of the first full year of LTST system operation to compare to the 0.018 µg/L alternative interim goal, but, so far, these results appear to confirm that the LTST system was installed correctly and is operating properly.

3.7 DESIGN FLEXIBILITY AND CONTINGENCIES

Several contingencies have been designed into the 24-inch HDPE King County piping reroute for flexibility of future items and/or configurations. Designed and incorporated contingencies are as follows:

1. A valve box or vault is installed on the 24-inch HDPE reroute piping, in the northern portion of the site, to allow for potential future installation of a media filtration basin at available land at the north end of NBF (see Appendix B drawings, Sheet C295 and M502). This media filtration basin has been discussed as an option with EPA (Geosyntec Consultants 2011d) and is currently undergoing a pilot test in the area that the STST system had occupied. Monitoring of that pilot test is being conducted as described in the SAP (Landau Associates 2012).
2. A spare electrical/control conduit and spare 6-inch HDPE stormwater conveyance pipe are installed between the above-mentioned valve box/vault and the lift station to allow for potential future pump control and discharge of treated stormwater from a media filtration basin.
3. A vault structure (wet vault) is installed on the 24-inch HDPE reroute piping upstream of MH422 for potential future installation of a pump to direct bypassed King County stormwater to Slip 4 if it is later determined that the offsite King County flows are negatively affecting the LTST capability of meeting applicable water quality discharge criteria.
4. A weir and pressure/level transducer is installed within the above-mentioned wet vault (see plans in Appendix B) to monitor and estimate flows coming through the offsite King County lines.

4.0 OPERATION AND MAINTENANCE REQUIREMENTS

The operation and maintenance (O&M) of the LTST CESF system will be similar to that of the decommissioned STST system. Appendix H includes a detailed description of operation, maintenance, and monitoring of the LTST system. The O&M manual in Appendix H was recently updated to reflect the new Ecology general use designation for use of up to 1.5 percent chitosan acetate and to reflect EPA's approval to Boeing for use of that higher concentration chitosan solution or the original 1 percent solution. A summary of the prominent O&M tasks and description of LTST specific tasks is given below.

CESF systems are most frequently operated at construction sites where very turbid water (on the order of thousands of NTUs) is being treated, are operated intermittently, and are actively operated by trained personnel. Operation at NBF will differ in that treatment will take place 24 hours a day to treat base flow (although this may use only one of the three sand filters, allowing equipment maintenance to occur on a non-rush basis during dry weather) and storm flow, treating water with turbidity typically less than 25 NTU. Therefore, operation and monitoring of the LTST CESF system will be automated, except for weekly calibration, routine inspections, and troubleshooting to be conducted by trained CESF operators. A remote messaging alarm system will alert personnel if additional unscheduled/immediate maintenance is needed.

Monitoring of the CESF system during operation will include residual chitosan testing, routine inspections, and sensor and chitosan metering pump calibrations. Once the CESF system is optimized and operating smoothly, the chitosan dosing rate is anticipated to remain relatively constant, and a twice-monthly residual chitosan testing frequency is anticipated to be adequate to verify that no chitosan is being discharged to Slip 4. The monitoring frequency is listed in the SAP (Landau Associates 2012) and in the Operation and Maintenance Manual (Appendix H).

Breakthrough of PCBs through the sand filter media at very low levels was seen at the STST system after 6 months of operation and after the four-vessel system had filtered more than 20 million gallons of stormwater. Therefore, special attention will be paid to each of the three sand filter systems as they approach or pass the point of having filtered 20 million gallons. Sand filters will also lose some of their sand during the backflush cycles, so it is planned to open up the sand filters after approximately every 10 million gallons filtered to see if replacement sand is necessary to bring the filter media bed back up to its full height. Replacement of the filter media after treatment of over 20 million gallons may not be necessary if sand media volume is maintained and effluent water quality is meeting the design basis.

The LTST system supplier and operator, Clear Water, maintains spares of all their general system equipment (e.g., chitosan metering pumps, turbidity meters, valves, instrumentation). Therefore, system operational repairs that may be required can generally occur without delay.

4.1 MONITORING

Treatment system performance monitoring and site compliance monitoring will be conducted throughout operation of the LTST in a similar manner to monitoring conducted during STST operation. The details of planned monitoring are provided in the SAP (Landau Associates 2012), which includes a Field Sampling Plan (FSP) and Quality Assurance Project Plan (QAPP).

As described in the SAP, the objectives of the field sampling are to gather data to:

- Monitor stormwater discharges for comparison with the LTST interim goals
- Evaluate the design assumptions for and performance of the LTST facility
- Confirm that the interim goals are reasonably conservative and descriptive of site conditions, including the appropriateness of treating non-detect PCBs concentrations in water as zero when calculating the annual average PCB concentration
- Accurately characterize the offsite stream from the King County North Lateral re-route in order to evaluate this load contribution to the LSIV and the LTST system
- Evaluate individual lateral storm drain inputs, and monitor the effects of future source control actions
- Characterize solids for disposal.

Field sampling locations, sampling devices and sampling methodology are described in detail in the SAP. A summary of the sampling locations follows:

- **Lift Station (LS431) – Compliance Monitoring Point**. The point of compliance for the LTST interim goals is identified in the SAP as just downstream of the King County lift station pumps. This point is also downstream of the LTST system effluent discharge. Compliance monitoring at this location will consist of collecting flow-weighted whole water samples for laboratory analysis, and comparing data to the interim goal for PCBs in water. In addition, continuous flow monitoring will take place at LS431, which will be used to quantify the annual amount of stormwater discharged, as well as to apportion flow volumes to various categories (e.g., CESF treated storm flow vs. untreated bypass storm flow). This information is necessary to calculate the annual average for PCBs in water (alternate solids interim goal).
- **LTST System Influent and Effluent**. To monitor the performance of the LTST facility, whole water samples of the treatment facility influent and effluent, and filtered solids samples from the treatment facility influent and effluent, will be collected for laboratory analysis. The influent to the LTST facility from MH130A (the North Lateral) will be sampled independently from the influent to the LTST facility from the LSIV (all other laterals). Data from these sampling locations will also be used to calculate the annual average concentration of PCBs in water, and to determine the appropriateness of using zero for non-detect results in that calculation.
- **LTST Weir Tanks, Storage Tanks, and Sand Filters.** Samples will be collected of solids retained in the inlet weir and backflush settling tanks (both approximately 18,000-gallon capacity tanks) and storage tanks (each approximately 21,000-gallon capacity), as needed, to determine appropriate disposal options for the solids.

- **Sediment Traps.** To continue to evaluate individual lateral storm drain inputs, Boeing will continue the sediment trap monitoring program that began in 2005, with the modifications described in the SAP to account for changes in flow due to the stormwater reroute
- **Re-routed Storm Drain Pipe from King County.** In order to determine if the re-routed stormwater from King County is contributing to an inability of the LTST system to meet the EPA interim goals, flow-weighted water samples will be taken from one of the new manholes along the King County bypass re-route.

STST and LTST sample analyses are described in the SAP, and summarized in Tables 1a and 1b, respectively. In general, whole water samples will be analyzed for PCBs using EPA Method 8082, for TSS using Standard Method (SM) 2540, and for particle size distribution (PSD) by using the Ecology TAPE Method. In addition, to provide information for the remedial investigation being conducted by Ecology at NBF and the GTSP, samples will be analyzed for total and dissolved metals (arsenic, cadmium, chromium, copper, lead, mercury, nickel, and zinc) using EPA Methods 200.8 and 7470; semivolatile organic compounds (SVOCs) using EPA Method 8270D, and PAHs using EPA Selected Ion Monitoring (SIM) Method 8270D. If insufficient sample is available for all analyses, the priority for analysis will be PCBs, TSS, PSD, total and dissolved metals, SVOCs, and PAHs. The target reporting limits for each analysis are presented in the SAP.

4.2 POINT OF COMPLIANCE

As described above, the POC is the King County lift station effluent vault (LS431), at a point just downstream of the location at which the CESF effluent is discharged into that structure, is identified as the point of compliance because storm drain discharges here represent 94 percent of the NBF onsite drainage area. The remaining 6 percent of the area is known to have relatively lower PCB solids concentrations (Landau Associates 2011c). The lift station is also the farthest downstream location in the storm drain system that is not impacted by tidal flushing. Downstream of the lift station, such as CB433 or at the outfall, water and solids samples would not be representative of solely NBF storm drain discharges (note that the lift station also does currently include significant upgradient offsite contributions). Figure 5 and the as-built drawings in Appendix A show the point of compliance, LS431.

4.3 REPORTING

Until such time that EPA approves of alternate reporting requirements, Boeing will continue to prepare monthly progress reports and submit those reports to EPA by the fifth day of the following month (or the first subsequent work day if the fifth day of the month falls on a weekend or holiday). Monthly progress reports will continue to include information related to stormwater treatment system operation (e.g., total gallons of stormwater treated, rainfall data, any significant operational problems or system

shutdowns) and will contain summary data tables of all validated stormwater analytical testing results that were received from the laboratory by the 24th of the month. Results of the Stage 2A data validation, as described in the SAP (Landau Associates 2012), will be documented in a technical memorandum. The technical memorandum will include a disk with electronic copies of chain-of-custody forms and laboratory data packages, and be submitted to EPA with project monthly reports.

5.0 SUMMARY OF PROJECT COSTS

A summary of project costs that Boeing have incurred as part of the work performed per the ASAOC is included in Table 4. As listed in Table 4, that cost is approximately $5,438,000. It should be noted that the costs presented only include external costs and do not include Boeing internal labor costs.

6.0 USE OF THIS REPORT

This report has been prepared for the exclusive use of The Boeing Company and applicable regulatory agencies for specific application to the installation and operation of a long-term stormwater treatment facility for removal of PCBs from stormwater in the storm drain system at NBF. No other party is entitled to rely on the information, conclusions, and recommendations included in this document without the express written consent of Landau Associates. Further, the reuse of information, conclusions, and recommendations provided herein for extensions of the project or for any other project, without review and authorization by Landau Associates, shall be at the user's sole risk. Landau Associates warrants that within the limitations of scope, schedule, and budget, our services have been provided in a manner consistent with that level of care and skill ordinarily exercised by members of the profession currently practicing in the same locality under similar conditions as this project. We make no other warranty, either express or implied.

This document has been prepared under the supervision and direction of the following key staff.

LANDAU ASSOCIATES, INC.

Martin Valeri, E.I.T.
Senior Staff Engineer

Jeremy Davis, P.E.
Senior Project Engineer

Robert Ludwig

Robert Ludwig, P.E.
Senior Project Engineer

Joseph A. Kalmar, P.E.
Principal

JAK/RCL/JMD/MCV/tam

7.0 REFERENCES

AMEC Geomatrix. 2011. *Slip 4 Salinity Monitoring Data Report, North Boeing Field, Seattle/Tukwila, Washington*. Submitted to The Boeing Company. June.

EPA. 2012. Letter: *EPA Approval of Final Memorandum, Amended Monitoring Approach Recommendations for North Boeing Field Long-Term Stormwater Treatment System, North Boeing Field, Seattle, Washington, prepared for The Boeing Company by Geosyntec Consultants and NBF Stormwater Expert Panel, dated January 10, 2012, ASAOC for Removal Action, CERCLA-10-2010-0242.* From Karen Keeley, Project Manager, U.S. Environmental Protection Agency, to Carl Bach, Project Manager, The Boeing Company. January 19.

EPA. 2011a. Letter: *EPA Approval of Slip 4 Salinity Monitoring Data Report, North Boeing Field, Seattle, Washington, prepared for The Boeing Company by AMEC Geomatrix, Inc., dated June 2011; ASAOC for Removal Action, CERCLA-10-2010-0242.* From Karen Keeley, Project Manager, U.S. Environmental Protection Agency, Region 10, to Brian Anderson, The Boeing Company. June 20.

EPA. 2011b. Letter: *EPA Approval of Schedule Extension for the Long-Term Stormwater Treatment, North Boeing Field, Seattle, Washington, ASAOC for Removal Action, CERCLA-10-2010-0242*. From Karen Keeley, Project Manager, U.S. Environmental Protection Agency, Region 10, to Brian Anderson, Project Manager, The Boeing Company, EHS Remediation. September 29.

EPA. 2010. Memorandum: *Action Memorandum for the Time-Critical Removal Action at North Boeing Field near the Slip 4 Early Action Area of the Lower Duwamish Waterway Superfund Site, Seattle, King County, Washington.* From Karen Keeley, Remedial Project Manager, U.S. Environmental Protection Agency, Region 10, to Daniel D Oplaski, Director, Office of Environmental Cleanup. September 23.

EPA and Boeing. 2010. *Administrative Settlement Agreement and Order on Consent for Removal Action, North Boeing Field and the Slip 4 Early Action Area of the Lower Duwamish Waterway Superfund Site, Seattle, Washington*. U.S. Environmental Protection Agency Region 10 Docket No. CERCLA-10-2010-0242. September 29.

Geosyntec Consultants. 2011a. *AKART Analysis Report for North Boeing Field Long-Term Stormwater Treatment*. February 9.

Geosyntec Consultants. 2011b. *Final Removal Action Work Plan: Long-Term Stormwater Treatment Addendum. North Boeing Field*. March 3.

Geosyntec Consultants. 2011c. *Final Removal Action Work Plan: Long-Term Stormwater Treatment, North Boeing Field*. January 26.

Geosyntec Consultants. 2011d. Biofilter Media Bed Pilot Study for North Boeing Field, Long-Term Stormwater Treatment, North Boeing Field, Seattle, Washington. Prepared for The Boeing Company. June 21.

Geosyntec and Landau Associates. 2011. *Final Pre-Design Technical Memorandum: Long-Term Stormwater Treatment*. North Boeing Field. April 6.

Jones, J., M. Stenstrom, R. Pitt, and Geosyntec Consultants. 2012. Memorandum: *Amended Monitoring Approach Recommendations for North Boeing Field Long-Term Stormwater Treatment System.* From Jon Jones, Michael Stenstrom, and Robert Pitt, NBF Stormwater Expert Panel; jointly with Geosyntec Consultants, to Karen Keeley, U.S.EPA. January 10.

Jones, J., Stenstrom, M., Pitt, R., and Geosyntec Consultants. 2011. Memorandum: *Alternative Interim Goal Recommendations for Protection of Slip 4 Sediment Recontamination.* December 12.

Landau Associates 2012. S*ampling and Analysis Plan, Long-Term Stormwater Treatment, North Boeing Field, Seattle, Washington*. Prepared for The Boeing Company. March 21.

Landau Associates. 2011a. *Removal Action Work Plan, Short-Term Stormwater Treatment, North Boeing Field, Seattle, Washington*. Prepared for The Boeing Company. January 7.

Landau Associates. 2011b. *Technical Memorandum: November 2011 Progress Report, North Boeing Field Stormwater Treatment, Lower Duwamish Waterway Superfund Site, EPA Docket No. CERCLA-10-2010-0242*. From Kristi Hendrickson and Joseph Kalmar, to Karen Keeley, U.S. Environmental Protection Agency. December 5.

Landau Associates. 2011c. *100% Design Report, Long-Term Stormwater Treatment, North Boeing Field, Seattle, Washington*. Prepared for The Boeing Company. June 24.

Landau Associates. 2011d. *Technical Memorandum: Bedload Sampling and Analysis Results, Short-Term Stormwater Treatment, North Boeing Field, Seattle, Washington*. From Colette Griffith and Kristy Hendrickson, to Carl Bach, The Boeing Company. June 20.

Landau Associates. 2010. *Proposed Design, Short-Term Stormwater Treatment Facility, North Boeing Field, Seattle, Washington*. Prepared for The Boeing Company. July 15.

SAIC. 2010a. Draft: *North Boeing Field/Georgetown Steam Plant Site Remedial Investigation/ Feasibility Study: Assessment of Infiltration and Inflow to North Boeing Field Storm Drain System*. Prepared for the Washington State Department of Ecology. Science Applications International Corporation. July 14.

SAIC. 2010b. *North Boeing Field/Georgetown Steam Plant Site Remedial Investigation/Feasibility Study. Work Plan and SAP/QAPP Addendum Expanded Stormwater Monitoring.* Science Applications International Corporation. April 30.

SAIC. 2010c. *North Boeing Field/Georgetown Steam Plant Site Remedial Investigation/Feasibility Study. Stormwater Sampling SAP/QAPP Addendum #2 2010-2011 Stormwater Monitoring.* Science Applications International Corporation. November 12.

SAIC. 2009. *North Boeing Field/Georgetown Steam Plant Site Remedial Investigation/Feasibility Study. Sampling and Analysis Plan and Quality Assurance Project Plan for Preliminary Stormwater and Storm Drain Solids Sampling.* Science Applications International Corporation. July 14.

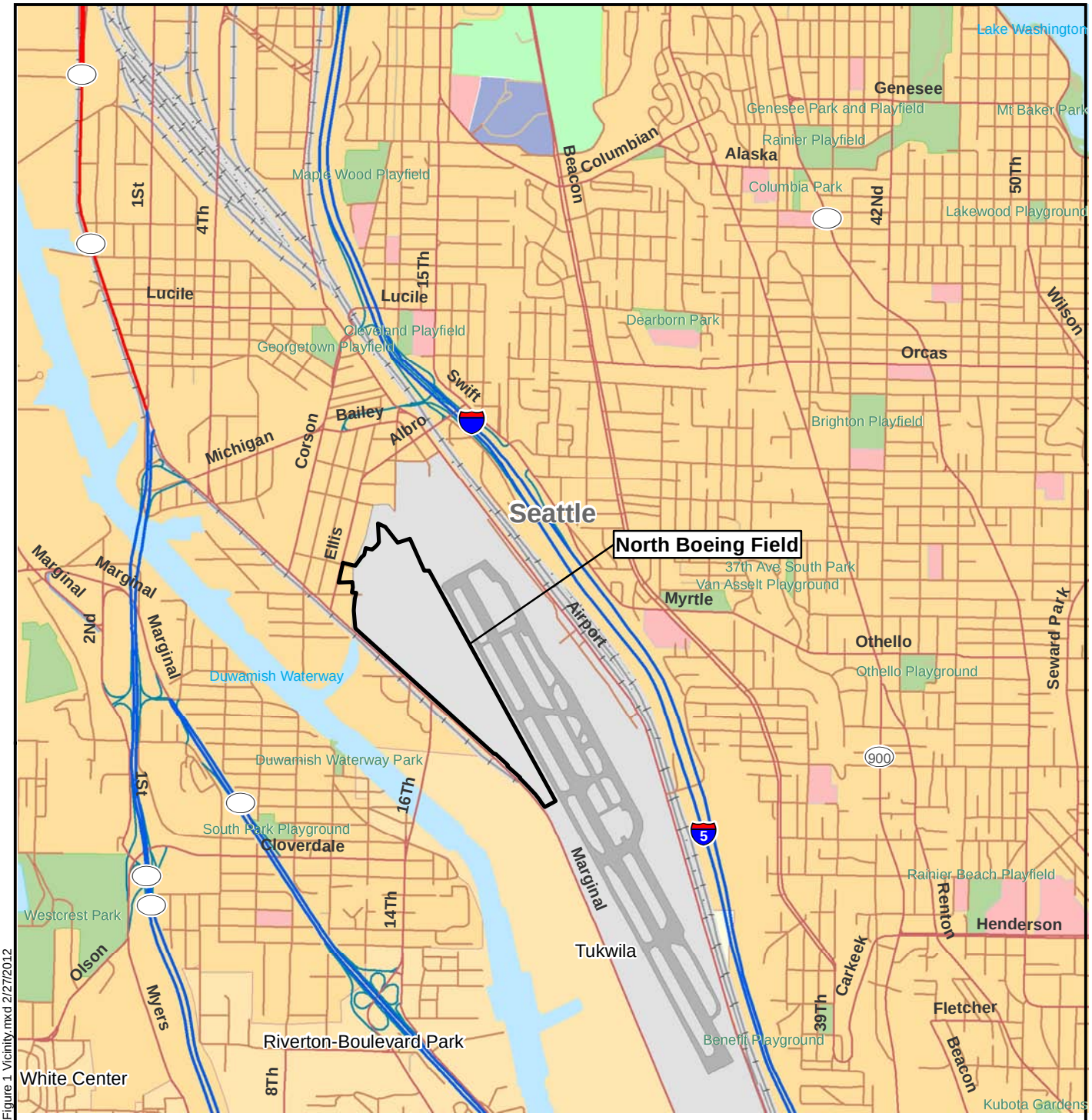

N

0 0.5 1
Miles

Data Source: ESRI 2008

Y:\Projects\025082\MapDocs\311\Completion Report\Figure 1 Vicinity.mxd 2/27/2012

LANDAU ASSOCIATES

North Boeing Field Seattle, Washington	**Vicinity Map**	Figure 1

Y:\Projects\025082\MapDocs\311\Completion Report\Figure 2-On_Offsite_Basins.mxd NAD 1983 StatePlane Washington North FIPS 4601 Feet

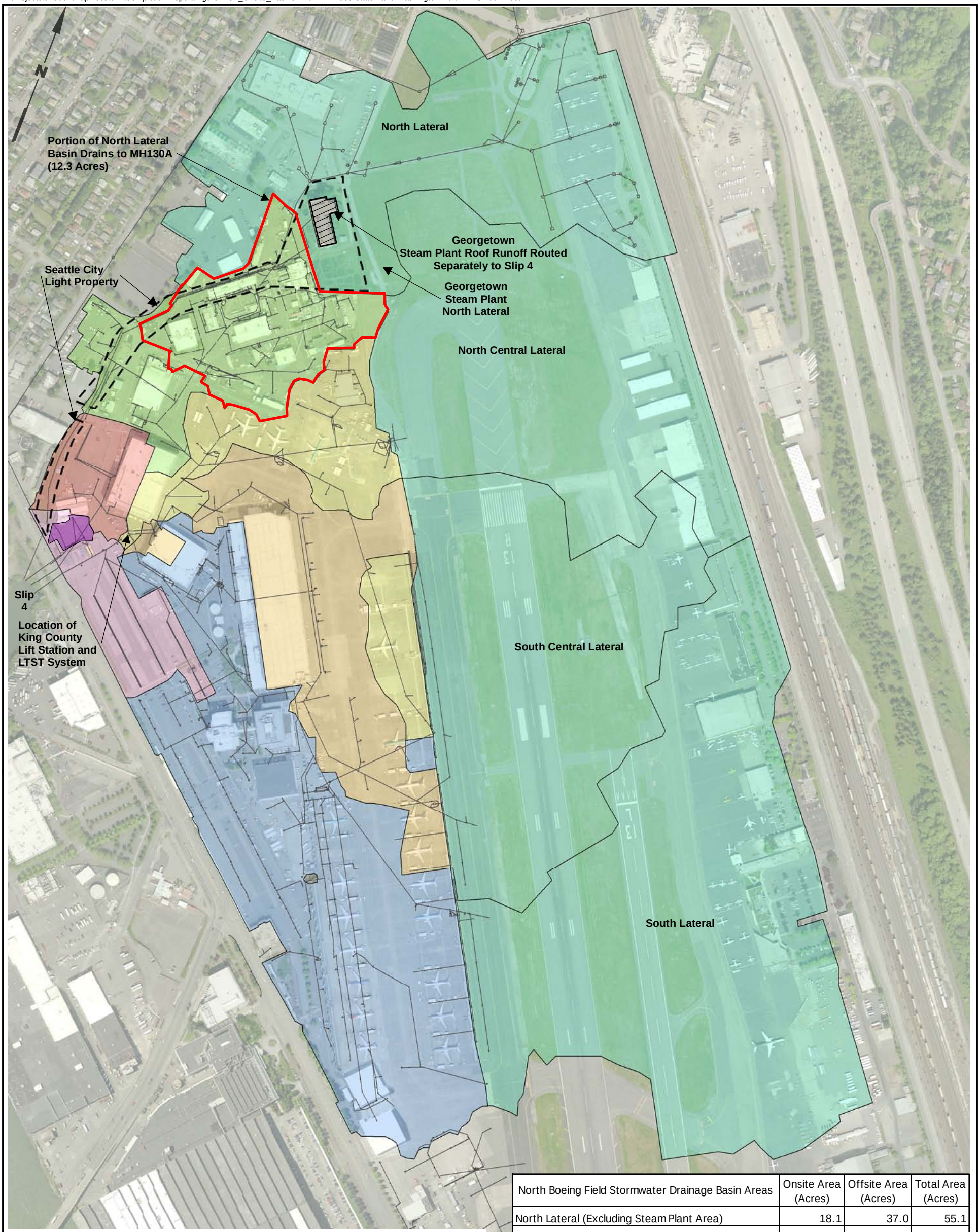

North Boeing Field Stormwater Drainage Basin Areas	Onsite Area (Acres)	Offsite Area (Acres)	Total Area (Acres)
North Lateral (Excluding Steam Plant Area)	18.1	37.0	55.1
North Lateral Steam Plant Only - No Roof	0.0	4.1	4.1
North-Central Lateral	14.7	42.6	57.3
South-Central Lateral	21.9	42.7	64.6
South Lateral	46.3	64.3	110.6
Bldg 3-380 Area	4.6	0.0	4.6
Re-Routed to Combine with 3-380 Drainage Area	0.5	0.0	0.5
Total Drainage Area to Lift Station (LS431)	106.1	190.7	296.8
Parking Lot Area (Downstream of KC Lift Station)	6.8	0.0	6.8
Sanitary Sewer <0.1 Acres			

Legend

- MH130 Drainage Basin
- Off-site
- Drainage to Sanitary Sewer
- Building 3-380 Area
- North-Central Lateral
- North Lateral
- Parking Lot Area (Downstream of King County Lift Station, LS431)
- South-Central Lateral
- South Lateral
- Area Re-Routed to Combine with 3-380 Drainage Area

0 450 900

Scale in Feet

Data Source: Aerial - SAIC 2009; Conveyance System - The Boeing Company (On-site) and SAIC 2009 (Off-site); Basin Boundaries - The Boeing Company (On-site), SAIC 2009 (Off-site) Figure 2-1 "Storm Drain Lines in the Vicinity of NBF-GTSP Site", and City of Seattle Map "Lower Duwamish Waterway Areas Draining to Slip 4"

Note
1. Black and white reproduction of this color original may reduce its effectiveness and lead to incorrect interpretation.

LANDAU ASSOCIATES

North Boeing Field
Seattle, Washington

North Boeing Field Stormwater Drainage Basins

Figure
2

Y:\Projects\025082\MapDocs\311\Completion Report\Figure 3.mxd 2/27/2012 NAD 1983 StatePlane Washington North FIPS 4601 Feet

Legend

- Sediment Trap
- Flow-weighted Water Sampling Location (using an ISCO autosampler)
- NBF Storm Drain Structures
- Short-Term Stormwater Treatment Facility
- North Lateral Drain Line
- North-Central Lateral Drain Line
- South-Central Lateral Drain Line
- South Lateral Drain Line
- Drainage from Building 3-380 Area
- Drainage from parking lot area

0 160 320

Scale in Feet

Storm Drain System Data Source: SAIC

Note

1. Black and white reproduction of this color original may reduce its effectiveness and lead to incorrect interpretation.

LANDAU ASSOCIATES

North Boeing Field Seattle, Washington	**STST Sampling Locations and Pre-LTST Storm Drain Configuration**	Figure 3

Y:\Projects\025082\MapDocs\311\Completion Report\Figure 4-SD Sampling.mxd 3/19/2012 NAD 1983 StatePlane Washington North FIPS 4601 Feet

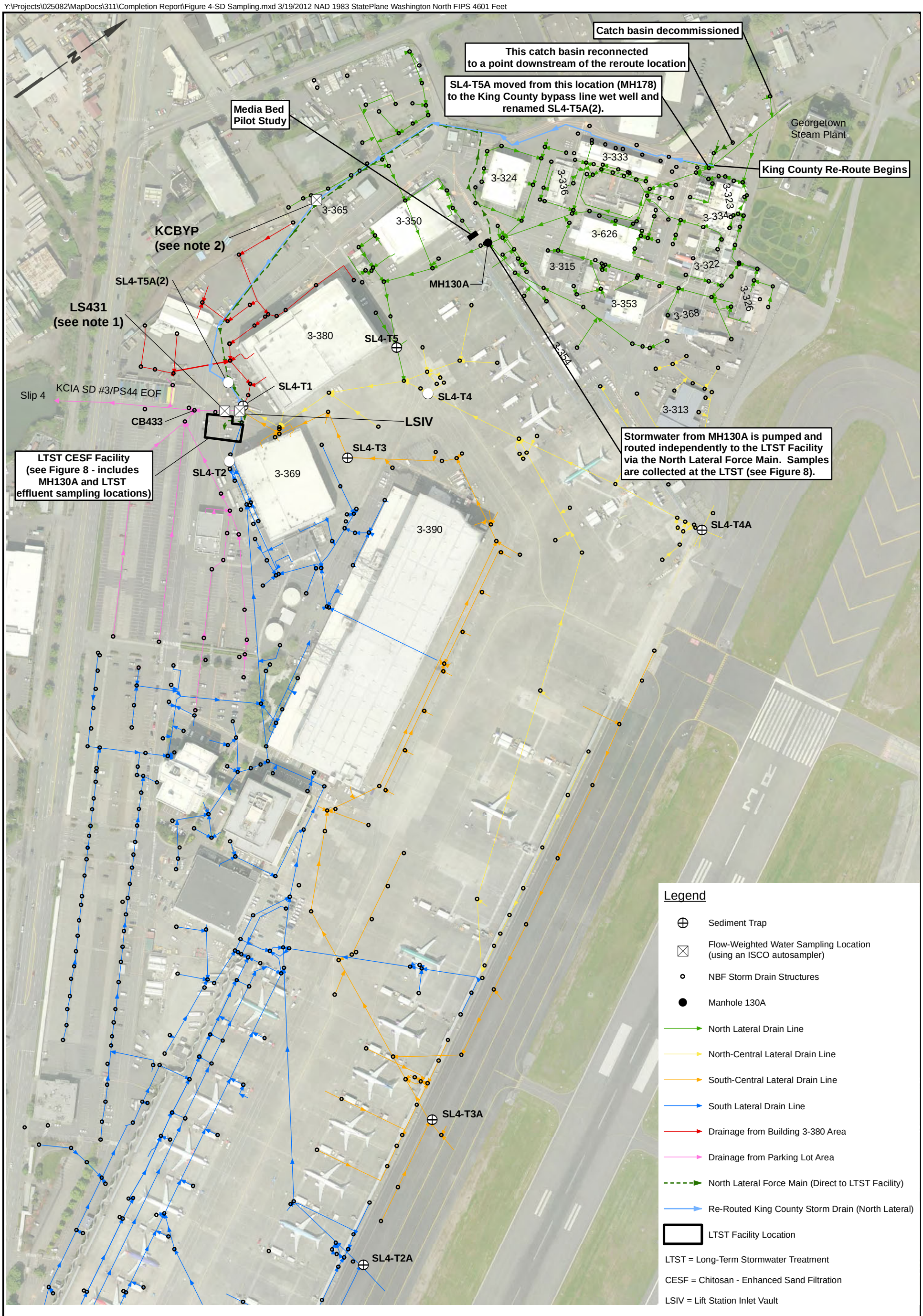

Notes:

1. LS431 is the Point of Compliance (POC).
2. KCBYP is the sampling location for re-routed King County stormwater - north lateral.
3. Black and white reproduction of this color original may reduce its effectiveness and lead to incorrect interpretation.

Storm Drain System Data Source: SAIC

LANDAU ASSOCIATES

North Boeing Field Seattle, Washington	**Updated Storm Drain System and LTST Sampling Locations**	Figure 4

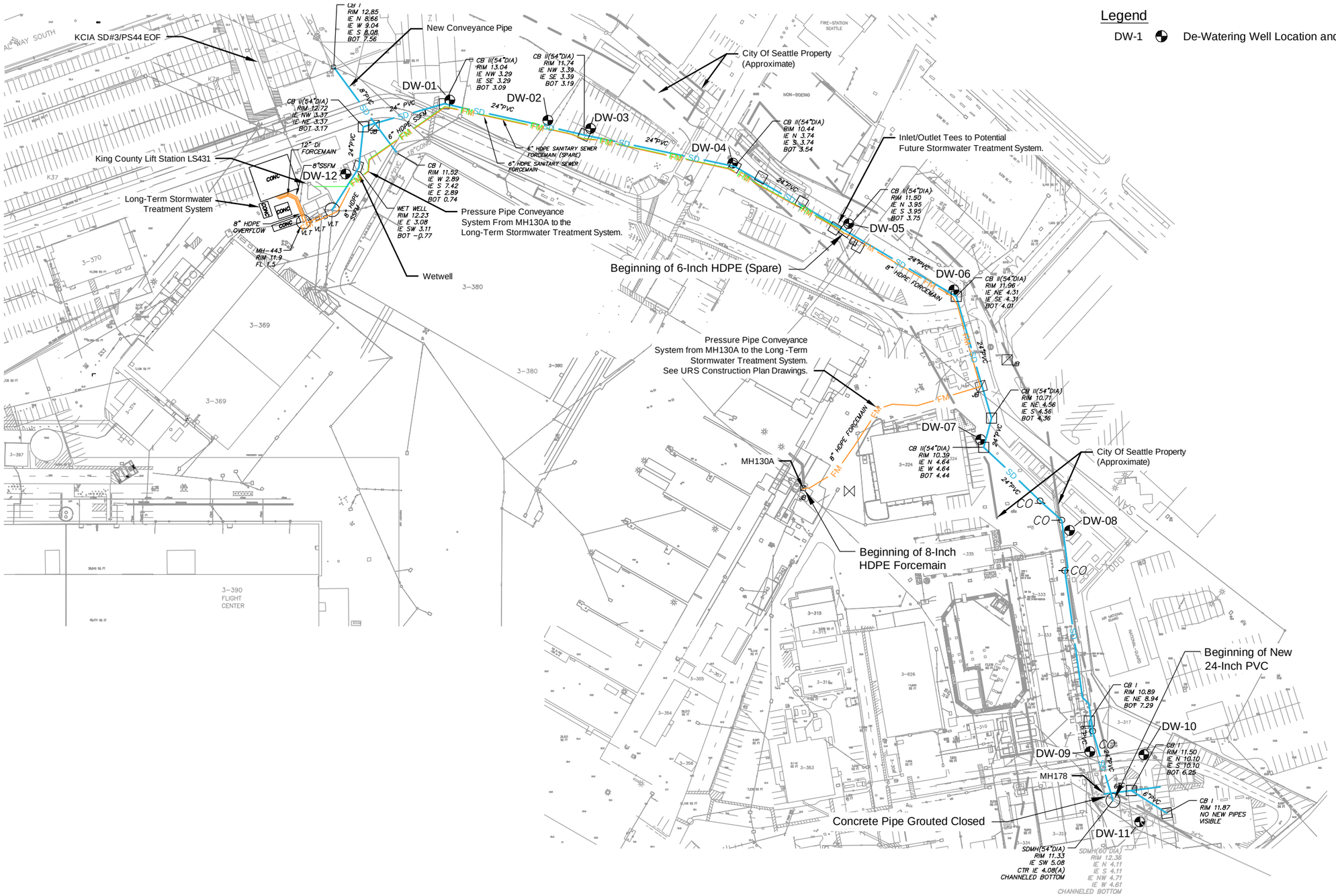

Well Locations: DHA De-Watering Well Survey for North Boeing Field Dated 10/04/11
Base map source: Boeing Stormwater Conveyance Plan C504 Dated 06/23/11

N

0 150 300

Scale in Feet

Note

1. Black and white reproduction of this color original may reduce its effectiveness and lead to incorrect interpretation.

LANDAU ASSOCIATES

North Boeing Field Long-Term Stormwater Treatment Completion Report	**Long-Term Stormwater Treatment New Storm Drain Construction**	Figure **5**

LANDAU ASSOCIATES, INC. | V:\025\082311\001\Completion Report\Figure 5.dwg (A) "Figure 5" 2/27/2012

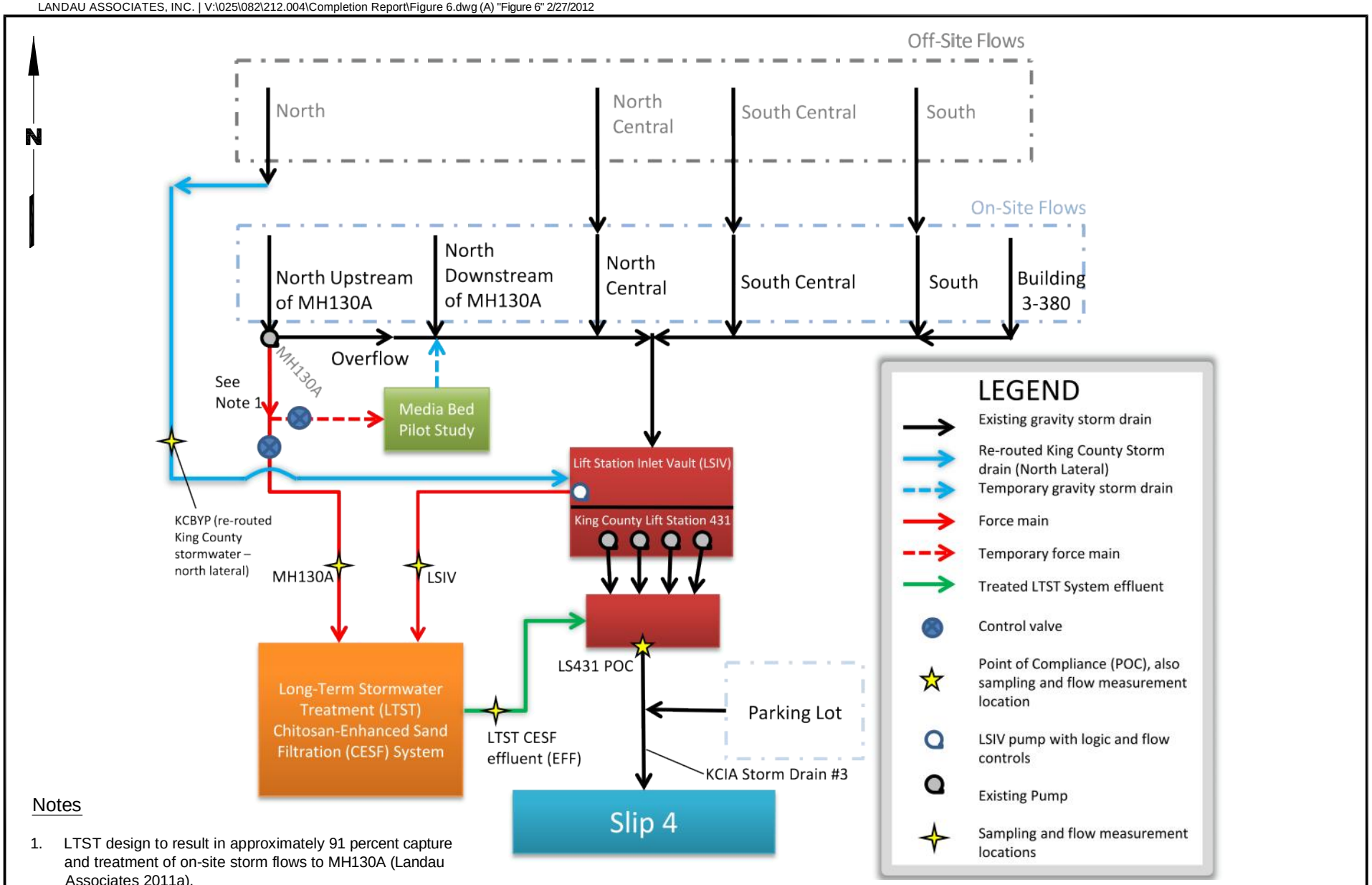

Notes

1. LTST design to result in approximately 91 percent capture and treatment of on-site storm flows to MH130A (Landau Associates 2011a).

2. Black and white reproduction of this color original may reduce its effectiveness and lead to incorrect interpretation.

Source: Adapted from Figure 1 (Jones et. al 2012)

LANDAU ASSOCIATES

North Boeing Field Seattle, Washington	**Schematic Diagram of LTST System Components**	Figure 6

LANDAU ASSOCIATES

North Boeing Field
Long Term Stormwater
Treatment Completion Report

Overhead View of Completed LTST System

Figure
7

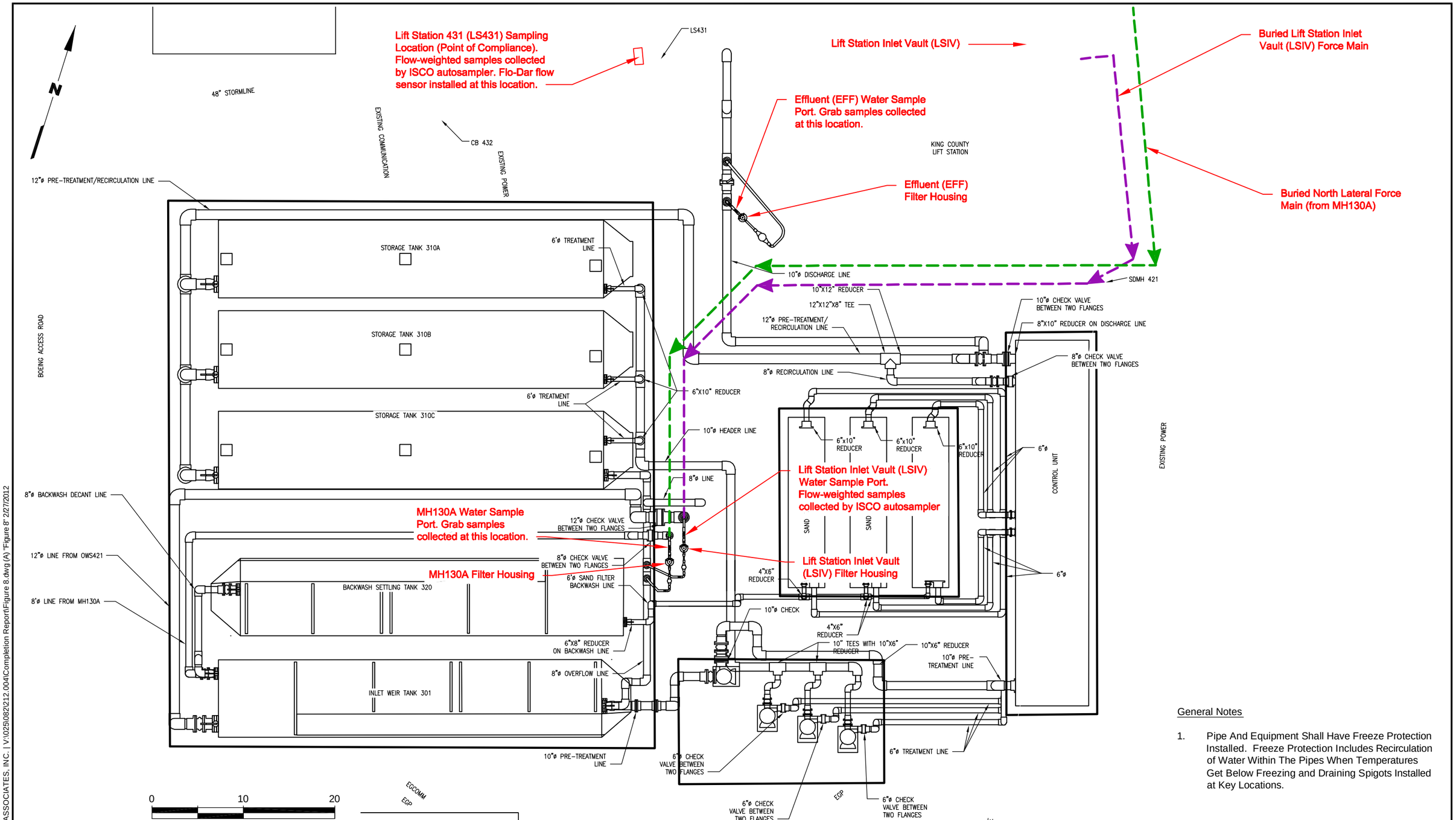

Source: Boeing Treatment System Piping Layout Plan M502 Record Drawing Dated 12/08/11

General Notes

1. Pipe And Equipment Shall Have Freeze Protection Installed. Freeze Protection Includes Recirculation of Water Within The Pipes When Temperatures Get Below Freezing and Draining Spigots Installed at Key Locations.

Note

1. Black and white reproduction of this color original may reduce its effectiveness and lead to incorrect interpretation.

LANDAU ASSOCIATES

North Boeing Field Seattle, Washington	**LTST Sampling Locations**	Figure 8

LANDAU ASSOCIATES, INC. | V:\025\082\212.004\Completion Report\Figure 8.dwg (A) "Figure 8" 2/27/2012

FIGURE 9
COMPLETED PROJECT SCHEDULE FOR LONG-TERM STORMWATER TREATMENT CONSTRUCTION
NORTH BOEING FIELD - SEATTLE, WASHINGTON

ID	Task Name	Duration	Start	Finish
1	Task 3A.1. Draft Pre-Design Technical Memorandum	37 days	Wed 1/26/11	Thu 3/17/11
2	Task 3A.1. Final Pre-Design Technical Memorandum	21 days	Fri 3/18/11	Fri 4/15/11
3	Salinity Monitoring Data Technical Memo (following receipt of final data)	4 wks	Wed 4/20/11	Tue 5/17/11
4	EPA Design Review Meeting	0 days	Thu 4/28/11	Thu 4/28/11
5	Task 3.A.2 Pre-Final (60%) Design	27 days	Fri 3/25/11	Mon 5/2/11
6	Procurement of Major CESF System Components	10 days	Tue 5/3/11	Mon 5/16/11
7	Fabrication and Delivery of Major CESF System Components	12 wks	Tue 5/17/11	Mon 8/8/11
8	EPA Design Review Meeting #2 (tentative)	0 days	Wed 5/25/11	Wed 5/25/11
9	Task 3A.3. 90% Design	19 days	Tue 5/3/11	Fri 5/27/11
10	Task 3B. Draft O&M Manual	19 days	Tue 5/3/11	Fri 5/27/11
11	Task 3A.4. 100% Design	20 days	Mon 5/30/11	Fri 6/24/11
12	Task 3B. Final O&M Manual	20 days	Mon 5/30/11	Fri 6/24/11
13	Prepare and Release Bid Documents	10 days	Tue 4/26/11	Mon 5/9/11
14	Review Bids and Select Contractor	6 days	Fri 5/13/11	Fri 5/20/11
15	Contractor Initial Material Procurement and Mobilization	12 days	Mon 6/13/11	Tue 6/28/11
16	Construction, Subsurface Work, and Electrical Power Supply	17.3 wks	Wed 6/29/11	Wed 10/26/11
17	CESF System Equipment Placement, Piping Connections, Electrical & Instrumentation	11 wks	Mon 8/15/11	Thu 10/27/11
18	Initial Attempt at Connecting Electrical Power Supply and Worker Injury	0 days	Sun 9/18/11	Sun 9/18/11
19	EPA Onsite Project Status Meeting	0 days	Tue 9/20/11	Tue 9/20/11
20	Startup Testing (Full System Testing after Full Power Connection 10/23/11)	10 days	Mon 10/17/11	Fri 10/28/11
21	Long-Term Stormwater Treatment Installed and Operating	0 days	Fri 10/28/11	Fri 10/28/11
22	Complete Installation of Monitoring Equipment and Site Restoration Activities	2 wks	Mon 10/31/11	Fri 11/11/11
23	CESF System Routine Operation and Maintenance	9 wks	Fri 10/28/11	Thu 12/29/11
24	Task 4. Removal Action/Stormwater Treatment Completion Report *	45 edays	Fri 10/28/11	Mon 12/12/11

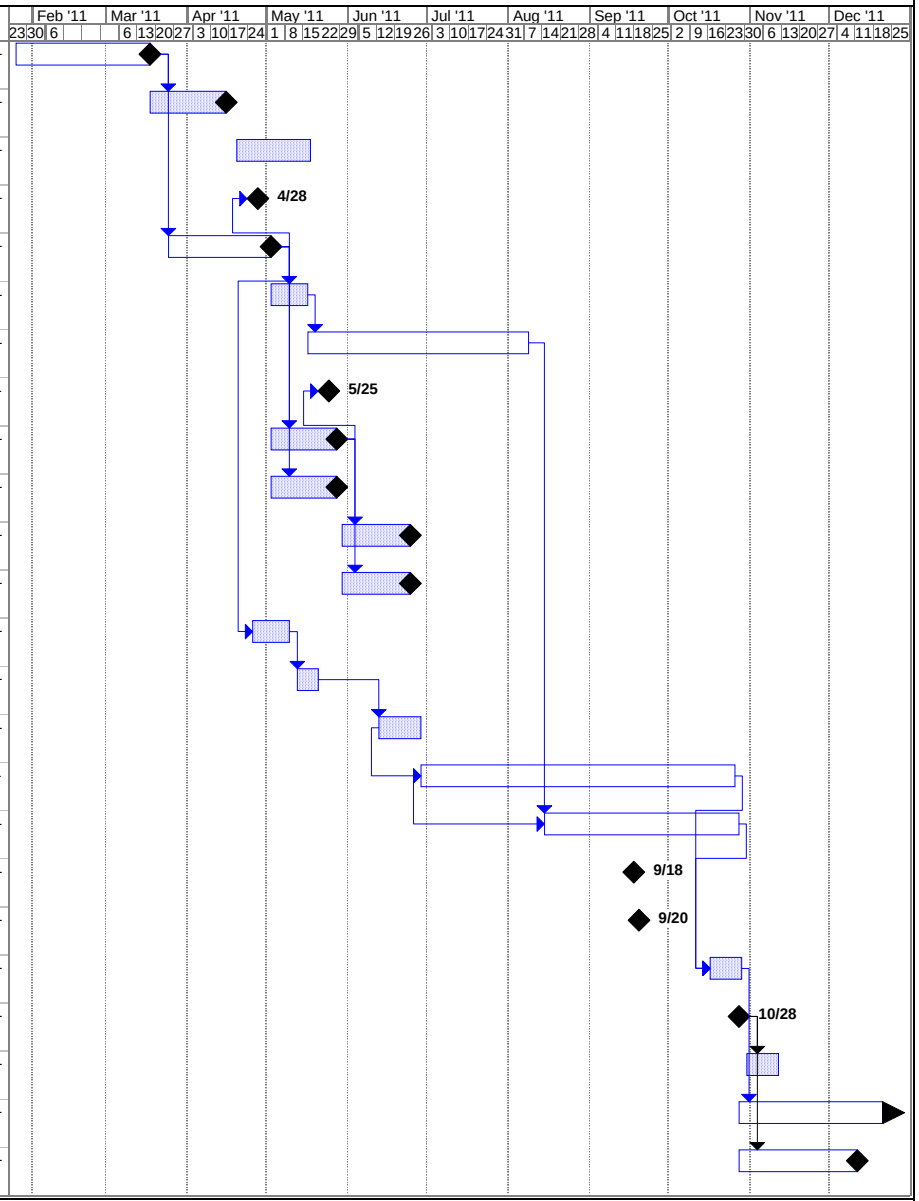

* Revised Final Completion Report due to EPA within 20 days of receipt of any comments from EPA.

Task		Milestone		External Tasks	
Split		Summary		External Milestone	
Progress		Project Summary		Deadline	

TABLE 1a
SHORT-TERM REMOVAL ACTION SAMPLING AND ANALYSIS SUMMARY
NORTH BOEING FIELD - SEATTLE, WASHINGTON

Location	Sample Type	Sample Media	Frequency (a)	Parameters (b)	Analytical Methods
Lift Station (LS431)	Whole Water (c, d, e) (flow-weighted composite)	Stormwater (f)	9 Storm Events and 2 Base Flow Events, November 2010 - May 2011	PCBs	EPA Method 8082
				TSS	SM 2540
				Metals	EPA Method 6010 / 7470
				SVOCs	SW8270D
				Conventionals (g)	Various
	Filtered Solids (c, h) (in-line stormwater filtration)	Stormwater Solids	8 Storm Events and 2 Base Flow Events, November 2010 - May 2011	PCBs	EPA Method 8082
				TSS	Calculated (i)
				Particle Size Distribution	PSEP-PS (j)
			Not Sampled (k)	PCB Concentrations by particle size (k)	EPA Method 8082
			9 Storm Events and 2 Base Flow Events,	Metals	EPA Method 6010 / 7471
			4 Storm Events and 1 Base Flow Event, November 2010 - May 2011	Dioxins/Furans	EPA Method 1613B
				PAHs	SW8270D
Short-Term Stormwater Treatment (STST) System	Whole Water Influent (grab)	Stormwater (f)	Weekly (l)	PCBs	EPA Method 8082
				TSS	SM 2540
	Whole Water Effluent (grab)	Stormwater (f)	Weekly (l)	PCBs	EPA Method 8082
				TSS	SM 2540
	Whole Water Effluent (grab) (m)	Stormwater (f)	Weekly (n)	Residual Chitosan	Ecology approved procedure (o)
	Filtered Solids Influent	Stormwater Solids	Twice monthly (p)	PCBs	EPA Method 8082
				TSS	Calculated (i)
	Filtered Solids Effluent	Stormwater Solids	Twice monthly (p)	PCBs	EPA Method 8082
				TSS	Calculated (i)
Manhole 108 (MH108)	Whole Water Effluent (c, e) (flow-weighted composite)	Stormwater (f)	7 Storm Events Nov 2010 - February 2011 (q)	PCBs	EPA Method 8082
				TSS	SM 2540
				Metals	EPA Method 6010 / 7470
				SVOCs	SW8270D
				Conventionals (g)	Various
	Filtered Solids (c, h) (in-line stormwater filtration)	Stormwater Solids	6 Storm Events November 2010 - April 2011 (q)	PCBs	EPA Method 8082
				TSS	Calculated (i)
			5 Storm Events November 2010 - April 2011 (q)	Particle Size Distribution	PSEP-PS (j)
				Metals	EPA Method 6010 / 7471
			3 Storm Events January 2011 - April 2011 (q)	Dioxins/Furans	EPA Method 1613B
			2 Storm Events January 2011 - April 2011 (q)	PAHs	SW8270D
Manhole 178 (MH178)	Whole Water (c, h, r) (flow-weighted and time-weighted composite)	Stormwater (f)	4 Storm Events and 2 Base Flow Events, November 2010 - May 2011	PCBs	EPA Method 8082
				TSS	SM 2540
				Metals	EPA Method 6010 / 7470
				SVOCs	SW8270D
				Conventionals (g)	Various
	Filtered Solids (c, h) (in-line stormwater filtration)	Stormwater Solids	5 Storm Events and 2 Base Flow Events, March 2011 - May 2011	PCBs	EPA Method 8082
				TSS	Calculated (i)
				Particle Size Distribution	PSEP-PS (j)
				Metals	EPA Method 6010 / 7471
			2 Storm Events and 1 Base Flow Event, March 2011 - April 2011	Dioxins/Furans	EPA Method 1613B
			3 Storm Events and 1 Base Flow Event, March 2011 - May 2011	PAHs	SW8270D

TABLE 1a
SHORT-TERM REMOVAL ACTION SAMPLING AND ANALYSIS SUMMARY
NORTH BOEING FIELD - SEATTLE, WASHINGTON

Location	Sample Type	Sample Media	Frequency (a)	Parameters (b)	Analytical Methods
Sediment Traps (SL4-T1, SL4-T2, SL4-T3, SL4-T4, SL4-T4A, SL4-T5, SL4-T5A)	Grab	Stormwater Solids	Semi-Annually (s)	PCBs	EPA Method 8082
				Semivolatiles	PSDDA SVOCS SW8270D
				Total Metals	Method 6000-7000
				NWTPH-Dx	NWTPH-Dx
				Total Organic Carbon	Plumb, 1981
				Grain Size	PSEP-PS
Bedload Solids (SL4-T1, SL4-T2, SL4-T3, SL4-T4, SL4-T5)	Bed Load	Residual Solids	Twice from SL4-T1, SL4-T3, and SL4-T5; Once from SL4-T2 and SL4-T4	PCBs	EPA Method 8082
			Once at SL4-T3	SVOCs	SW8270D
				Metals	EPA Method 6010 / 7471
Weir tank (filter backwash tank)	Grab	Settled Solids	As Needed (t)	PCBs	EPA Method 8082
				PAHs	SW8270D
				Metals	TCLP and/or Method 6000-7000
				Petroleum Hydrocarbons	NWTPH-Dx and NWTPH-Gx

(a) Monitoring plan beginning November 2010. All sampling and analysis were performed by Boeing/Landau Associates and Boeing's contract laboratory, unless otherwise noted.
(b) Analyses were performed if sufficient sample volume was collected. The priority for analysis of samples if insufficient sample volume was collected is summarized in Table 4.
(c) Boeing coordinated with the Washington State Department of Ecology and their consultant SAIC for sampling at the Lift Station LS431, Manhole 108, and Manhole 178. Samples were collected by either Boeing/Landau Associates or Ecology/SAIC.
(d) During three events, Ecology/SAIC collected whole water samples at the lift station using centrifuge method (Green River) and submitted the samples for PCB analysis.
(e) Lift station LS431, Manhole 108, and Manhole 178 whole water samples were analyzed for metals (arsenic, cadmium, chromium, copper, lead, mercury, silver, and zinc), SVOCs, and TOC and other conventionals in accordance with the Ecology/SAIC storm system sampling work plan and addenda (SAIC 2009, 2010b, 2010c) when sufficient volume was available.
(f) Stormwater is defined as all liquids, including any particles dissolved therein, in the form of base flow, storm water runoff, snow melt runoff, and drainage, as well as all solids which enter the storm drain system.
(g) Conventionals analytes included pH, alkalinity, carbonate, bicarbonate, hydroxide, chloride, nitrate, sulfate, total organic carbon, dissolved organic carbon, and hardness.
(h) Lift station LS431, Manhole 108, and Manhole 178 solids samples were analyzed for metals (arsenic, cadmium, chromium, copper, lead, mercury, silver, and zinc), PAHs, and dioxins/furans in accordance with the Ecology/SAIC storm system sampling work plan and addenda (SAIC 2009, 2010b, 2010c) when sufficient volume was available.
(i) Calculated based on mass of filtered solids and volume of stormwater filtered. This calculation was discontinued in May 2011 due to multiple uncertainties in measuring TSS in this fashion.
(j) Grain size fractionation/particle size distribution was conducted using Puget Sound Estuary Protocols (PSEP) method. When low volumes of sample were collected, grain size fractionation was accomplished using sedigraph for material less than 62.5 µm.
(k) Typically there was an adequate quantity of solids for particle size distribution analysis, but there was not an adequate amount of solids for the laboratory to analyze PCBs within selected particle size fractions.
(l) Three of the weekly influent/ effluent sampling events were performed concurrent with the lift station LS431 storm sampling events. Overflow at MH130B (i.e., treatment system bypass), if any, was measured using a water level transducer during the sampling period.
(m) Whole water effluent grab samples for Residual Chitosan testing were collected from the treatment facility effluent sample port by Clear Water Compliance Services.
(n) Because of the uniform low turbidity of the NBF stormwater relative to typical chitosan effluent sand filtration (CESF) construction site projects and because of the extremely low probability of chitosan passing through the sand filters, residual chitosan testing was conducted weekly. Residual chitosan was never detected in sand filter effluent from this project.
(o) Per Clear Water O&M Manual, Ecology approves procedures for residual chitosan testing for each distributor of chitosan acetate. Testing was conducted in accordance with the distributor's approved procedures.
(p) The influent and effluent flow rate was checked twice monthly. If the flow rate was low enough to suggest adequate amount of solids had collected on the filter, a filtered solids sample was collected and analyzed.
(q) The Manhole 108 stormwater and solids sampling events were performed concurrent with the lift station LS431 storm sampling events.
(r) Flow-weighted sampling was conducted for the first storm event at Manhole 178, but the next attempted event failed to collect samples due to sensor error, and flow-weighted sampling was abandoned in favor of time-weighted sampling.
(s) Sediment traps were installed November 12, 2010. The traps were collected and replaced in April 2011. Depending on the quantity of solids collected, the laboratory may not have been able to analyze all parameters. Analysis of parameters was prioritized in the order listed.
(t) The thickness of accumulated solids (sludge) in the weir tank was checked monthly by Clear Water Compliance Services. If more than an average of 12 inches of solids had accumulated, a grab sample of the solids was collected by Boeing/Landau Associates and analyzed for waste characterization purposes. Similar testing was done of filter sand prior to disposal.

TABLE 1b
LONG-TERM REMOVAL ACTION SAMPLING AND ANALYSIS SUMMARY
NORTH BOEING FIELD - SEATTLE, WASHINGTON

Location	Sample Type	Sample Media	Frequency (a)	Parameters	Analytical Methods
Lift Station (LS431) (Compliance Monitoring Point)	Whole Water (flow-weighted composite)	Stormwater (b)	Monthly routine sampling (multiple day sampling period), November 2011 - December 2012; Five additional 24-hour storm events of ≥0.5 inch precipitation, November 1, 2011 - October 31, 2012	PCBs	EPA Method 8082
				TSS	SM 2540D
				Total & Dissolved Metals (k)	EPA Methods 200.8, 7470 for Hg
				SVOCs (k)	EPA Method 8270D
				PAHs (k)	EPA SIM Method 8270D
				PSD	Ecology TAPE Method (m)
			To be determined (c), starting January 2013	PCBs	EPA Method 8082
				TSS	SM 2540D
				Total & Dissolved Metals (k)	EPA Methods 200.8, 7470 for Hg
				SVOCs (k)	EPA Method 8270D
				PAHs (k)	EPA SIM Method 8270D
				PSD	Ecology TAPE Method (m)
Long-Term Stormwater Treatment System	Whole Water Influent from MH130A (grab)	Stormwater (b)	Twice monthly in 2011, monthly in 2012 (d); To be determined (c) starting January 2013	PCBs	EPA Method 8082
				TSS	SM 2540D
				PSD	Ecology TAPE Method (m)
	Whole Water Influent from Lift Station Inlet Vault (composite)		Twice monthly in 2011, monthly in 2012 (d); To be determined (c) starting January 2013	PCBs	EPA Method 8082
				TSS	SM 2540D
				PSD	Ecology TAPE Method (m)
	Whole Water Effluent (grab)		Twice monthly in 2011, monthly in 2012 (d); To be determined (c) starting January 2013	PCBs	EPA Method 8082
				TSS	SM 2540D
				PSD	Ecology TAPE Method (m)
	Whole Water Effluent (grab) (e)		Twice monthly (f)	Residual Chitosan	Ecology approved procedure (g)
	Filtered Solids Influent from MH130A	Stormwater Solids	Monthly through December 2012, including during the five 24-hr storm sampling events; To be determined (c) starting January 2013	PCBs	EPA Method 8082
			Monthly through December 2012; To be determined (c) starting January 2013	PSD	PSEP-PS (j)
				Metals (l)	EPA Methods 6010/6020, 7471 for Hg
	Filtered Solids Influent from Lift Station Inlet Vault		Monthly through December 2012, including during the five 24-hr storm sampling events; To be determined (c) starting January 2013	PCBs	EPA Method 8082
			Monthly through December 2012; To be determined (c) starting January 2013	PSD	PSEP-PS (j)
				Metals (l)	EPA Methods 6010/6020, 7471 for Hg
	Filtered Solids Effluent (n)		Monthly through December 2012, including during the five 24-hr storm sampling events; To be determined (c) starting January 2013	PCBs	EPA Method 8082
Media Bed Pilot Study: Influent, Effluent from Cell A, and Effluent from Cell B	Whole Water (grab)	Stormwater (b)	Five storm events of >0.2 inch precipitation and five dry weather events by July 1, 2012	PCBs	EPA Method 8082
				TSS	SM 2540D
				PSD	Ecology TAPE Method (m)
				Total Organic Carbon	SM 5310B or SM 5310C
				Dissolved Organic Carbon	SM 5310B or SM 5310C

TABLE 1b
LONG-TERM REMOVAL ACTION SAMPLING AND ANALYSIS SUMMARY
NORTH BOEING FIELD - SEATTLE, WASHINGTON

Location	Sample Type	Sample Media	Frequency (a)	Parameters	Analytical Methods
Sediment Traps [SL4-T1, SL4-T2, SL4-T3, SL4-T4, SL4-T4A, SL4-T5, SL4-T5A(2) (q)] (SL4-T5A to be moved from MH178 to King County bypass line wet well)	Annual Composite, Homogenized	Stormwater Solids	Annually (h)	PCBs	PSDDA Method 8082
				SVOCs	PSDDA SVOCS SW8270D
				Total Metals	Method 6000-7000
				NWTPH-Dx	NWTPH-Dx (with acid silica gel cleanup)
				Total Organic Carbon	Plumb 1981
				Percent Total Solids	EPA 160.3 (modified for solids)
				PSD	PSEP-PS (j)
Weir and Storage Tanks, Sand Filter Media	Composite from 3 or More Grab Samples from Tank or Filter Vessel (grab locations to result in both horizontal and vertical compositing)	Settled Solids	As Needed (i)	PCBs	EPA Method 8082
				SVOCs	EPA Method 8270D
				Metals	TCLP and/or Method 6000-7000
				Petroleum Hydrocarbons	NWTPH-Dx and NWTPH-Gx
Re-routed King County Stormwater - North Lateral (KCBYP) (manhole west of 3-365 building)	Whole Water (flow-weighted composite)	Stormwater (b)	Parallel w/ LS431 sampling: half of the routine monthly events, November 1, 2011 - December 31, 2012, and two storm events, November 1, 2011 - October 31, 2012	PCBs	EPA Method 8082
				TSS	SM 2540D
				Total & Dissolved Metals (k)	EPA Methods 200.8, 7470 for Hg
				PSD	Ecology TAPE Method (m)
			To be determined (c), starting January 2013	PCBs	EPA Method 8082
				TSS	SM 2540D
				Total & Dissolved Metals (k)	EPA Methods 200.8, 7470 for Hg
				PSD	Ecology TAPE Method (m)
Contingency (o): Offsite Stormwater - Other Laterals (SL4-T2A, SL4-T3A, SL4-T4A)	Whole Water (flow-weighted composite)	Stormwater (b)	Two events per location (p), parallel w/ LS431 sampling	PCBs	EPA Method 8082
				TSS	SM 2540D
				Total & Dissolved Metals (k)	EPA Methods 200.8, 7470 for Hg
				PSD	Ecology TAPE Method (m)

(a) Monitoring plan beginning November 2011. All sampling and analysis will be performed by Boeing/Landau Associates and Boeing's contract laboratory, unless otherwise noted.
(b) Stormwater is defined as all liquids, including any particles dissolved therein, in the form of base flow, storm water runoff, snow melt runoff, and drainage, as well as all solids which enter the storm drain system.
(c) For sampling in 2013, Boeing will propose to EPA a sampling frequency and sampling parameters based on the results from the November 2011 - October 2012 sampling events.
(d) One LTST system influent/effluent sampling event per month will be performed during the monthly lift station (LS431) sampling event.
(e) Whole water effluent grab samples for Residual Chitosan testing will be collected from the treatment facility effluent sample port by Clear Water Compliance Services.
(f) Residual chitosan was never detected in weekly effluent samples from the STST facility, and there is extremely low probability of chitosan being able to pass through the sand filters.
(g) Per CESF system O&M Manual, Ecology approves procedures for residual chitosan testing for each chitosan distributor. Testing will be conducted in accordance with distributor's approved procedures.
(h) Depending on the quantity of solids collected in the sediment traps, the laboratory may not be able to analyze all parameters. Laboratory will weigh and report total mass of solids collected per sample location. Analysis of parameters will be prioritized in the order listed. Sediment trap sampling will continue indefinitely until such time that additional data collection is no longer needed to support source control efforts.
(i) The thickness of accumulated solids (sludge) in the weir tank will be checked at least once per month to determine if solids should be removed. Prior to solids removal, a composite sample of the solids will be collected and analyzed for waste characterization purposes. Composite sampling will also be done for used sand filter media prior to disposal. Subsequent waste characterization will not be necessary unless contaminant concentrations in the LTST influent change significantly.
(j) Grain size fractionation/particle size distribution for solids samples will be conducted using Puget Sound Estuary Protocols (PSEP) method. When low volumes of sample are collected, grain size fractionation will be accomplished using sedigraph for material less than 62.5 µm.
(k) If sufficient volume is available, LS431 whole water samples will be analyzed for total and dissolved metals (arsenic, cadmium, chromium, copper, lead, mercury, nickel, and zinc), SVOCs, and PAHs to support Ecology's NBF-GTSP remedial investigation activities.
(l) When sufficient volume is available, LTST filtered solids samples will be analyzed for metals (arsenic, cadmium, chromium, copper, lead, mercury, nickel, and zinc) to support Ecology's NBF-GTSP remedial investigation activities.
(m) The preferred method for particle size distribution (PSD) will continue to be evaluated as the results are received.
(n) From experience with STST filtered solids collection, there will not be enough solids collected in the LTST effluent filter for metals or PSD analysis. Therefore, we do not propose to filter for metals or PSD analysis at the LTST effluent.
(o) Sampling of stormwater from offsite KCIA sources may be performed to assess KCIA stormwater impact on compliance with EPA Interim Goals.
(p) Sampling of some or all events at these locations may not be feasible, as the locations are on the flightline and safety concerns and regulations may interfere with sampling activities.
(q) Location SL4-T5A(2) does not have a bracket and Teflon container like the other sediment trap locations; SL4-T5A(2) shall be sampled by collecting solids from the bottom of the wet well, which collects solids behind a permanent weir.

TABLE 2
PROJECT DOCUMENTS PRODUCED UNDER THE ASAOC
NORTH BOEING FIELD - SEATTLE, WASHINGTON

ASAOC Task	Action or Document Title	Author	Date
N/A	Proposed Design, Short-Term Stormwater Treatment Facility	Landau Associates	July 15, 2010
1	Short-term Stormwater Treatment Facility Installed and Operating	N/A	September 15, 2010
1A	Draft Removal Action Work Plan: Short-term Stormwater Treatment	Landau Associates	September 2, 2010
1A	Final Removal Action Work Plan: Short-term Stormwater Treatment	Landau Associates	January 7, 2011
1B	Draft Short-term Treatment Facility Operation and Maintenance Manual	Landau Associates	September 2, 2010
1B	Final Short-term Treatment Facility Operation and Maintenance Manual	Landau Associates	December 22, 2010
1C	Draft Short-term Treatment Facility Compliance Assessment Technical Memorandum	Landau Associates	October 29, 2010
1C	Final Short-term Treatment Facility Compliance Assessment Technical Memorandum	Landau Associates	November 19, 2010
2	Draft Removal Action Work Plan: Long-term Stormwater Treatment	Geosyntec Consultants	November 12, 2010
2	Final Removal Action Work Plan: Long-term Stormwater Treatment	Geosyntec Consultants	January 26, 2011 Addendum - March 3, 2011
N/A	Final Slip 4 Salinity Monitoring Plan	Geosyntec Consultants	January 2011
N/A	Final Slip 4 Salinity Monitoring Field Sampling Plan	AMEC Geomatrix	January 2011
N/A	Final AKART Analysis Report for North Boeing Field Long-Term Stormwater Treatment	Geosyntec Consultants	February 9, 2011
3	Project Design Documents and Installation, Operation, and Maintenance of Long-term Stormwater Treatment Facility	N/A	N/A
3A.1	Draft Pre-Design Technical Memorandum	Geosyntec Consultants	March 17, 2011
3A.1	Final Pre-Design Technical Memorandum	Geosyntec Consultants and Landau Associates	April 6, 2011
3A.2	Pre-Final (60%) Design Report for Long-Term Stormwater Treatment	Landau Associates	May 2, 2011
3A.3	90% Design Report for Long-Term Stormwater Treatment	Landau Associates	May 27, 2011
N/A	Slip 4 Salinity Monitoring Data Report	AMEC Geomatrix	June 2011
N/A	Memorandum, Bed Load Sampling and Analysis Results	Landau Associates	June 20, 2011
N/A	Biofilter Media Pilot Study for North Boeing Field	Geosyntec Consultants	June 21, 2011
3A.4	100% Design Report for Long-Term Stormwater Treatment	Landau Associates	June 24, 2011
3B	Draft Operation and Maintenance Manual for LTST	Landau Associates	(with 90% Design Report)
3B	Final Operation and Maintenance Manual for LTST	Landau Associates	(with 100% Design Report)
3C	Draft Sampling and Analysis Plan for LTST (Monitoring Plan for Water and Solids in Influent and Treated Effluent)	Landau Associates	(with 60% and 100% Design Reports)
3C	Sampling and Analysis Plan for LTST (revised)	Landau Associates	December 22, 2011
3C	Final Sampling and Analysis Plan for LTST	Landau Associates	February 24, 2012
N/A	Memorandum: Alternative Interim Goal Recommendations for Protection of Slip 4 Sediment Recontamination	Jones et al.	December 12, 2011
4	Draft Removal Action/Stormwater Treatment Completion Report	Landau Associates	December 12, 2011
N/A	Memorandum: Amended Monitoring Approach Recommendations for LTST System	Jones et al.	January 10, 2012
4	Final Removal Action/Stormwater Treatment Completion Report	Landau Associates	March 23, 2012

Jones et. al. = Jones, J., Stenstrom, M., Pitt, R., and Geosyntec Consultants
N/A = Not applicable

TABLE 3
PROJECT CONSULTANTS AND CONTRACTORS
NORTH BOEING FIELD SEATTLE, WASHINGTON

Consultant or Contractor	Description of Work
AMEC/Geomatrix	Completed the Slip 4 Salinity Study
Clear Water Services	Contractor responsible for installing, operating, and maintaining the chitosan enhanced sand filtration (CESF) systems for short-term and long-term stormwater treatment.
Expert Panel	Prepared alternative PCB solids interim goal memorandums for protection of Slip 4 from recontamination.
Geosyntec Consultants	Consulting engineer responsible for pre-design phase environmental engineering evaluations, AKART analysis, and media bed pilot study. Jointly produced alternative solids interim goal memorandums with expert panel.
Glacier Environmental Inc.	Contractor responsible for earthwork and utility installations related to stormwater conveyance and subsurface plumbing; construction support for media bed pilot test feasibilty study.
Landau Associates, Inc.	Consulting engineer responsible for design of short-term and long-term stormwater treatment systems (STST, LTST), monthly progress reports, oversight of installation/operation of treatment sytems by contractors, and compliance stormwater sampling.
PSC	Vactor truck and waste handling services associated with removal of filtered stormwater solids.
URS Engineering	Consulting engineer responsible for designing subsurface portions of the LTST system including storm sewers, force mains, pumps, electrical utilities, and slab foundations.

TABLE 4
ASAOC-RELATED PROJECT COSTS
NORTH BOEING FIELD, SEATTLE, WASHINGTON

Tasks	Amount
Short Term Stormwater Treatment (STST) Design and Installation Oversight Landau Associates costs including ASAOC and technical meetings	$ 57,000
STST - Installation and Operation Clear Water Services supply and O&M of the STST system, other monitoring equipment	$ 302,000
STST Construction (storm drain modifications and pumping system) Glacier Environmental costs for installing the large manholes (130A, 130B, 130C) associated with the STST and for installing pump and controls for MH130A.	$ 152,000
LTST System (CESF system, design, submittals, system startup) Landau Associates design, EPA submittals, and oversight; storage tanks; flow monitoring equipment; Clear Water Services subcontract costs for supply of CESF system	$ 1,250,000
Long-Term Stormwater Treatment (LTST) King County storm drain bypass line installation and LTST system connection Glacier Environmental costs for King County storm drain line installation including soil excavation, backfilling and repaving, MH130A to treatment system force main installation, lift station pump and metering valve installation, treatment system power connection, treatment system foundation installation.	$ 1,889,000
Stormwater sampling Landau costs for collection of stormwater samples under the ASAOC	$ 499,000
Engineering Design URS Engineering design consulting costs for King County storm drain, forced main, lift station pump, electrical service and treatment system foundation	$ 234,000
Soil Disposal 4,082 tons of soil at $32.40 per ton	$ 132,000
City of Seattle Construction Easement Easement for King County storm drain line on City property	$ 65,000
Laboratory Analysis Assumed 50% of North Boeing Field laboratory samples associated with stormwater sampling and storm drain soil excavation sampling analysis. (Oct 2010 - Nov 2011)	$ 195,000
EPA oversight costs EPA oversight and Black & Veatch costs (Nov 2010 and Dec 2011)	$ 160,000
Expert Panel Expert Panel costs for Evaluation of NBF discharges to Slip 4 (through Oct 2011)	$ 131,000
Stormwater Support Geosyntec costs for LTST Work Plan, AKART, Salinity Monitoring Report, Pre-design tech memo, and media bed pilot test (Oct 2010 -Oct 2011)	$ 305,000
Slip 4 Salinity Study AMEC Geomatrix costs for Slip 4 Salinity Study field work	$ 28,000
Media Bed Pilot Test Glacier Environmental costs for the media bed pilot test setup	$ 39,000
Total ASAOC Project Costs	$ 5,438,000

Notes:
1. Costs rounded to nearest $1,000.
2. LTST costs include costs projected in December 2011.
3. Listed costs exclude Boeing labor.

APPENDIX A

Record Drawings for the Long-Term Stormwater Treatment System

CB I
RIM 12.85
IE N 8.66
IE W 9.04
IE S 8.06
BOT 7.56

NEW CONVEYANCE PIPE, SEE SHEET C506

CB II(54"DIA)
RIM 13.04
IE NW 3.29
IE SE 3.29
BOT 3.09

PROPOSED GRAVITY PIPE CONVEYANCE SYSTEM FROM BURIED MANHOLE TO THE LONG TERM TREATMENT SYSTEM. SEE URS CONSTRUCTION PLAN DRAWINGS.

CITY OF SEATTLE PROPERTY (APPROXIMATE)

CB II(54"DIA)
RIM 11.74
IE NW 3.39
IE SE 3.39
BOT 3.19

CB II(54"DIA)
RIM 12.72
IE NW 3.37
IE NE 3.37
BOT 3.17

CONTRACTOR LAY DOWN AREA

CONTRACTOR LAY DOWN AREA

12"DI FORCEMAIN

8"SSFM

6"HDPE SANITARY SEWER FORCEMAIN (SPARE)

8"HDPE SANITARY SEWER FORCEMAIN (SPARE)

CB II(54"DIA)
RIM 10.44
IE N 3.74
IE S 3.74
BOT 3.54

CB I
RIM 11.52
IE W 2.89
IE S 7.42
IE E 2.89
BOT 0.74

WET WELL
RIM 12.23
IE E 3.08
IE SW 3.11
BOT -0.77

PROPOSED PRESSURE PIPE CONVEYANCE SYSTEM FROM MH130A TO THE LONG TERM STORMWATER TREATMENT SYSTEM. SEE URS CONSTRUCTION PLAN DRAWINGS.

PROPOSED INLET/OUTLET TEES TO POTENTIAL FUTURE STORMWATER TREATMENT SYSTEM. SEE URS CONSTRSUCTION PLAN DRAWINGS.

CB II(54"DIA)
RIM 11.50
IE N 3.95
IE S 3.95
BOT 3.75

8"HDPE OVERFLOW

LEVEL OUT
V4.7
V4.7

MH-443
RIM 11.9
FL 1.5

LONG TERM STORMWATER TREATMENT SYSTEM

PROPOSED WETWELL. SEE URS CONSTRUCTION PLAN DRAWINGS

KING COUNTY LIFT STATION LS431

CB II(54"DIA)
RIM 11.98
IE NE 4.31
IE SE 4.31
BOT 4.01

PROPOSED PRESSURE PIPE CONVEYANCE SYSTEM FROM MH130A TO THE LONG TERM STORMWATER TREATMENT SYSTEM. SEE URS CONSTRUCTION PLAN DRAWINGS.

PROPOSED GRAVITY PIPE CONVEYANCE SYSTEM FROM BURIED MANHOLE TO THE LONG TERM TREATMENT SYSTEM. SEE URS CONSTRUCTION PLAN DRAWINGS.

CB II(54"DIA)
RIM 10.71
IE NE 4.56
IE S 4.56
BOT 4.36

8" HDPE FORCEMAIN

CB II(54"DIA)
RIM 10.39
IE N 4.64
IE W 4.64
BOT 4.44

MH130A

CITY OF SEATTLE PROPERTY (APPROXIMATE)

CB I
RIM 10.89
IE NE 8.94
BOT 7.29

CB I
RIM 11.50
IE N 10.10
IE S 10.10
BOT 6.25

CB I
RIM 11.87
NO NEW PIPES VISIBLE

MH178

SDMH(54"DIA)
RIM 11.33
IE SW 5.08
CTR IE 4.08(A)
CHANNELED BOTTOM

SDMH(60"DIA)
RIM 12.36
IE N 4.11
IE S 4.11
IE NW 4.71
IE W 4.61
CHANNELED BOTTOM

NOTES:

1. AS-BUILTS OF THE CONVEYANCE SYSTEM IS FROM THE "SANITARY STORM AS-BUILT" OF "NORTH BOEING FIELD" BY DHA.

SITE PLAN

SCALE: 1" = 60'

60' 30' 0 60' 120'

SCALE IN FEET

KEY PLAN

SCALE : NONE

RECORD DRAWINGS

LANDAU ASSOCIATES

130 2ND AVENUE S.
EDMONDS, WA. 98020
(425) 778-0907, FAX (425) 778-6409

SYM	REVISION	BY	APPROVED	DATE	SYM	REVISION	BY	APPROVED	DATE
1	PRE-FINAL DESIGN (60%)	LANDAU	KALMAR	05.02.2011					
2	90% DESIGN	LANDAU	KALMAR	02.27.2011					
3	100% DESIGN	LANDAU	KALMAR	06.23.2011					
4	AS-BUILTS	LANDAU		12.06.2011					

BOEING®

ACCEPTABILITY
THIS DESIGN AND/OR SPECIFICATION IS APPROVED

APPROVED BY	DEPT.	DATE

		DATE
DRAWN	B.TAYLOR	06.23.2011
CHECKED	J.KALMAR	06.23.2011
ENGINEER	R. LUDWIG	06.23.2011
CHECKED		
APPROVED	J.KALMAR	06.23.2011
APPROVED		

SUBTITLE
LONG-TERM STORMWATER TREATMENT SYSTEM

TITLE
STORMWATER CONVEYANCE PLAN VIEW

CIVIL MASTER COL. NBF

CURRENT REVISION	SYMBOL	DATE
	D	06.23.2011

SHEET C504

JOB NO. | COMP NO.

DWG NO. 3-YD-C504.DWG

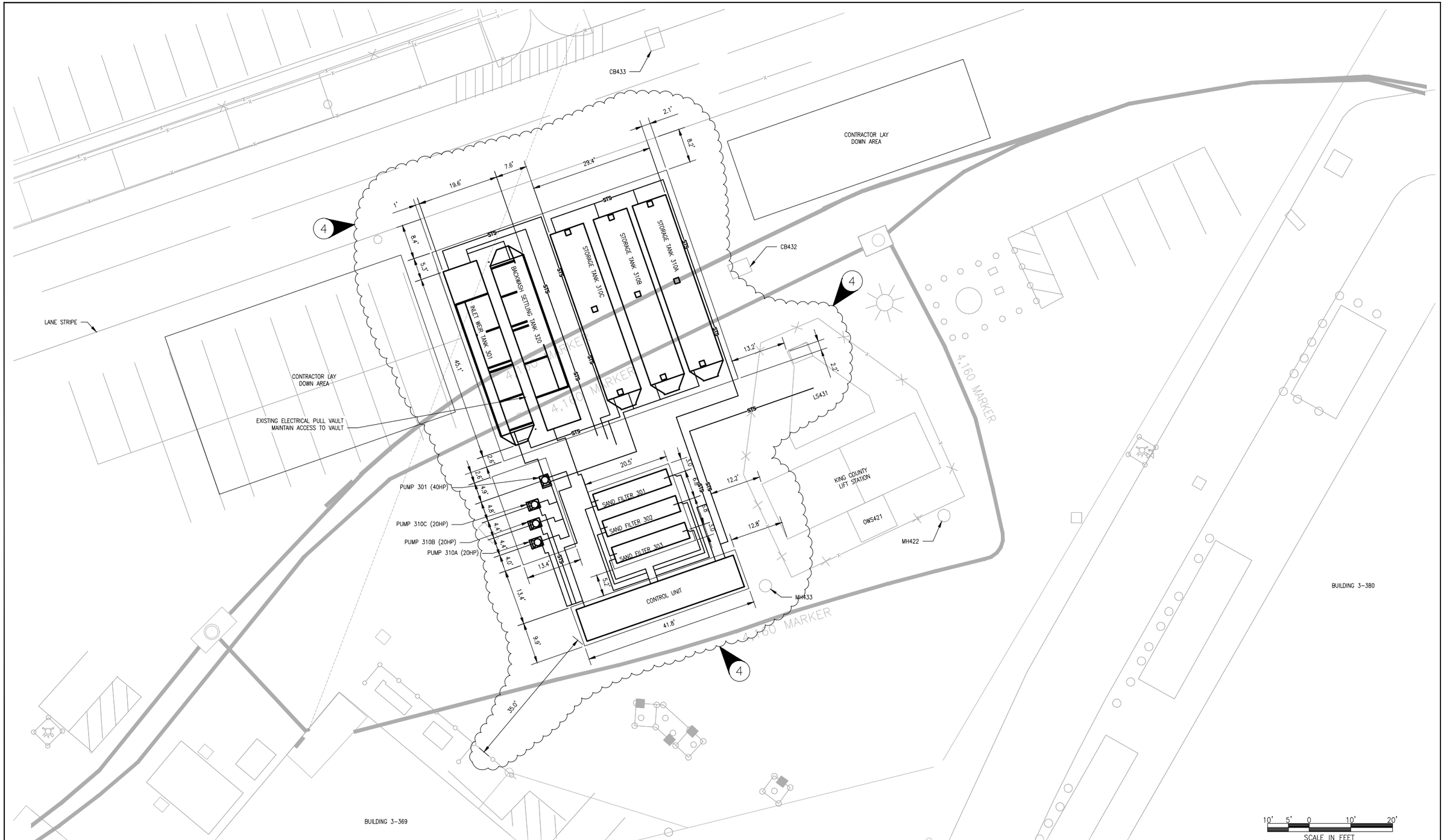

LANDAU ASSOCIATES
130 2ND AVENUE S.
EDMONDS, WA. 98020
(425) 778-0907, FAX (425) 778-6409

SITE PLAN
SCALE: 1" = 10'

KEY PLAN
SCALE : NONE

						C293	C292	C291	C290
				C299	C298	C297	C296	C295	C294
			C307	C306	C305	C304	C303	C302	C301	C300
C332		C317	C316	C315	C314	C313	C312	C311	C310	C309	C308
C330	C329	C328	C327	C326	C325	C324	C323	C322	C321	C320	C319	C318

RECORD DRAWINGS

SYM	REVISION	BY	APPROVED	DATE	SYM	REVISION	BY	APPROVED	DATE
1	PRE-FINAL DESIGN (60%)	LANDAU	KALMAR	05.02.2011					
2	90% DESIGN	LANDAU	KALMAR	05.27.2011					
3	100% DESIGN	LANDAU	KALMAR	06.23.2011					
A	LTST SYSTEM LAYOUT MODIFICATIONS	R. LUDWIG	J. KALMAR	07.29.2011					
4	AS-BUILTS	LANDAU		12.05.2011					

BOEING

ACCEPTABILITY
THIS DESIGN AND/OR SPECIFICATION IS APPROVED

APPROVED BY	DEPT.	DATE

DRAWN B.TAYLOR	06.23.2011	
CHECKED J.KALMAR	06.23.2011	
ENGINEER R. LUDWIG	06.23.2011	
CHECKED		
APPROVED J.KALMAR	06.23.2011	
APPROVED		

SUBTITLE
LONG-TERM STORMWATER TREATMENT SYSTEM

TITLE
TREATMENT SYSTEM
PLAN VIEW

CIVIL MASTER COL. NBF

CURRENT REVISION	SYMBOL D	DATE 06.23.2011
SHEET C505		
JOB NO.		COMP NO.
DWG NO. 3-YD-C505.DWG		

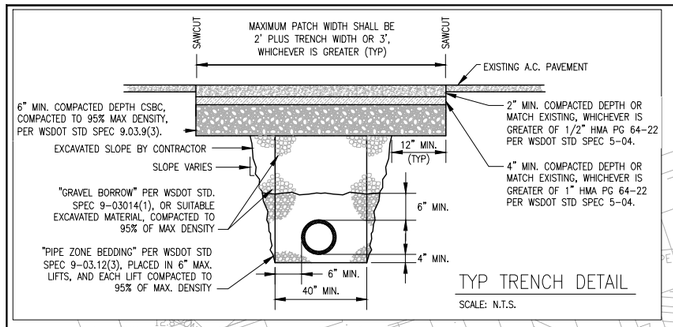

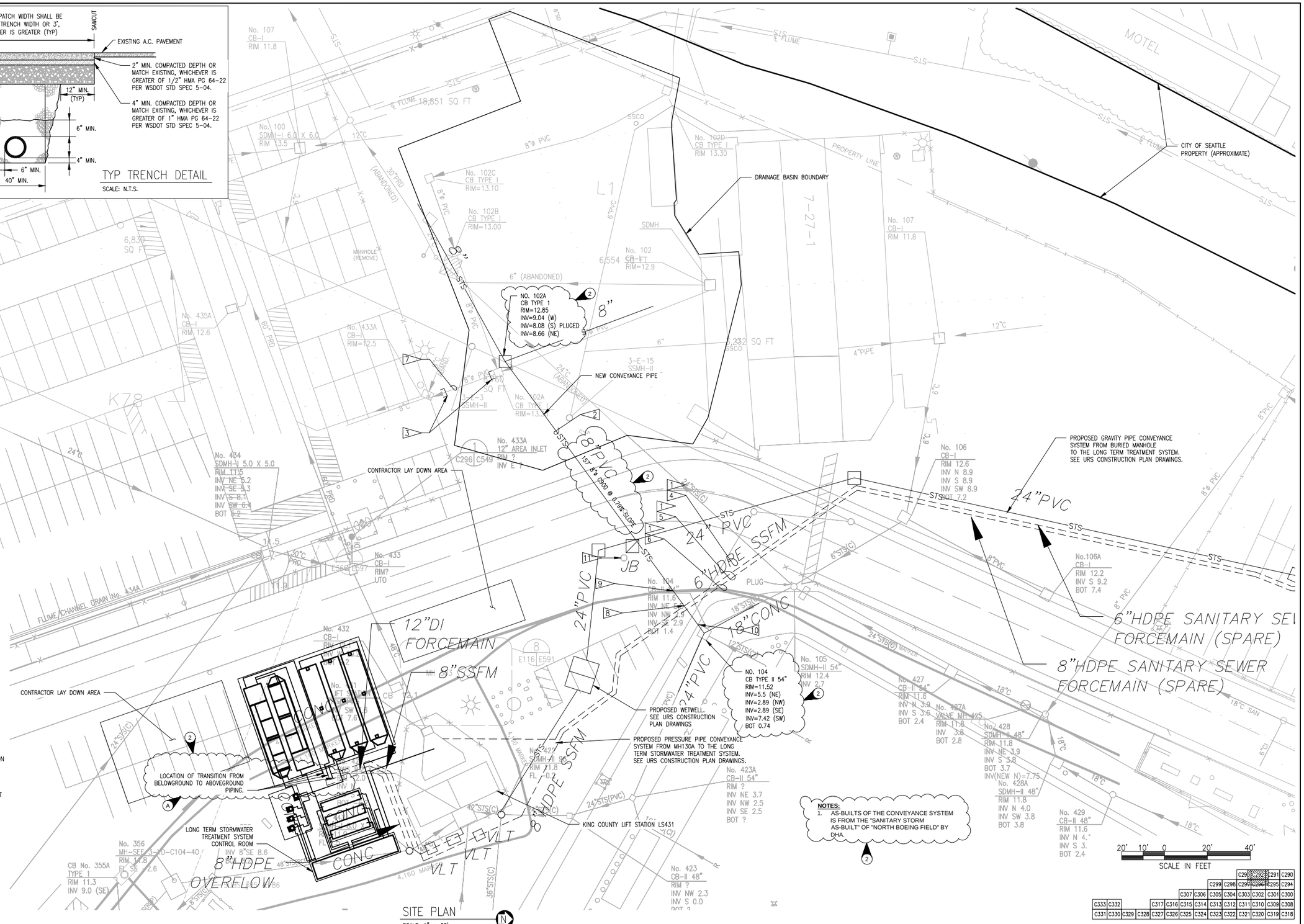

SITE PLAN

SCALE: 1" = 60'

CONSTRUCTION NOTES

1. SEE THE URS NORTH BOEING FIELD PHASE 2 RE-ROUTE STORMWATER LINE PLANS FOR ADDITIONAL PIPE INFORMATION.
2. INSTALL 8"ø C900 STORM DRAIN PIPE, PER TYPICAL TRENCH DETAIL.
3. PLUG END OF PIPE WITH CONCRETE.
4. 24"ø GRAVITY STORM LINE
5. 8"ø FORCE MAIN.
6. ELECTRICAL CONDUIT
7. PIPE TO BE ABANDONED.
8. PIPE CROSSING:
   ~~24"ø INV. 3.25 (STORM)~~
   8"ø INV. = 7.54 (STORM)
   VERIFY 24"ø INVERT ELEVATION ON URS CONSTRUCTION PLANS. COORDINATE FORCE MAIN AND ELECTRICAL CONDUIT CROSSING ELEVATIONS.
9. ELECTRICAL BANK CROSSING. POTHOLE TO VERIFY BANK ELEVATION AND NOTIFY ENGINEER IF A CONFLICT IN DESIGNED CROSSING ELEVATIONS IS FOUND.
10. PIPE CROSSING:
    6"ø INV. = 1.15(SEWER)
    8"ø INV. = 7.65(STORM)
11. UNKNOWN MANHOLE UTILITY.

LANDAU ASSOCIATES
130 2ND AVENUE S.
EDMONDS, WA. 98020
(425) 778-0907, FAX (425) 778-6409

SYM	REVISION	BY	APPROVED	DATE	SYM	REVISION	BY	APPROVED	DATE
1	100% DESIGN	LANDAU	KALMAR	06.23.2011					
A	LTST SYSTEM LAYOUT MODIFICATIONS	R. LUDWIG	J. KALMAR	07.29.2011					
2	AS-BUILTS	LANDAU		12.08.2011					

BOEING

ACCEPTABILITY
THIS DESIGN AND/OR SPECIFICATION IS APPROVED

APPROVED BY	DEPT.	DATE

		DATE
DRAWN	B.TAYLOR	06.23.2011
CHECKED	J.KALMAR	06.23.2011
ENGINEER	R. LUDWIG	06.23.2011
CHECKED		
APPROVED	J.KALMAR	06.23.2011
APPROVED		

RECORD DRAWINGS

SUBTITLE: LONG-TERM STORMWATER TREATMENT SYSTEM

TITLE: STORM DRAIN MODIFICATIONS PLAN VIEW

CIVIL MASTER COL. NBF

CURRENT REVISION: SYMBOL D — DATE 06.23.2011

SHEET: C506

JOB NO. — COMP NO.

DWG NO. 3-YD-C506.DWG

KEY PLAN
SCALE : NONE

																				C299	C298	C297	C296	C295	C294
																		C307	C306	C305	C304	C303	C302	C301	C300
C333	C332							C317	C316	C315	C314	C313	C312	C311	C310	C309	C308								
C331	C330	C329	C328	C327	C326	C325	C324	C323	C322	C321	C320	C319	C318												

NORTH BOEING FIELD
LONG-TERM STORMWATER TREATMENT SYSTEM
LOWER DUWAMISH WATERWAY SUPERFUND SITE
EPA DOCKET NO. CERCLA-10-2010-0242
SEATTLE, WASHINGTON

VICINITY MAP
SCALE: N.T.S.

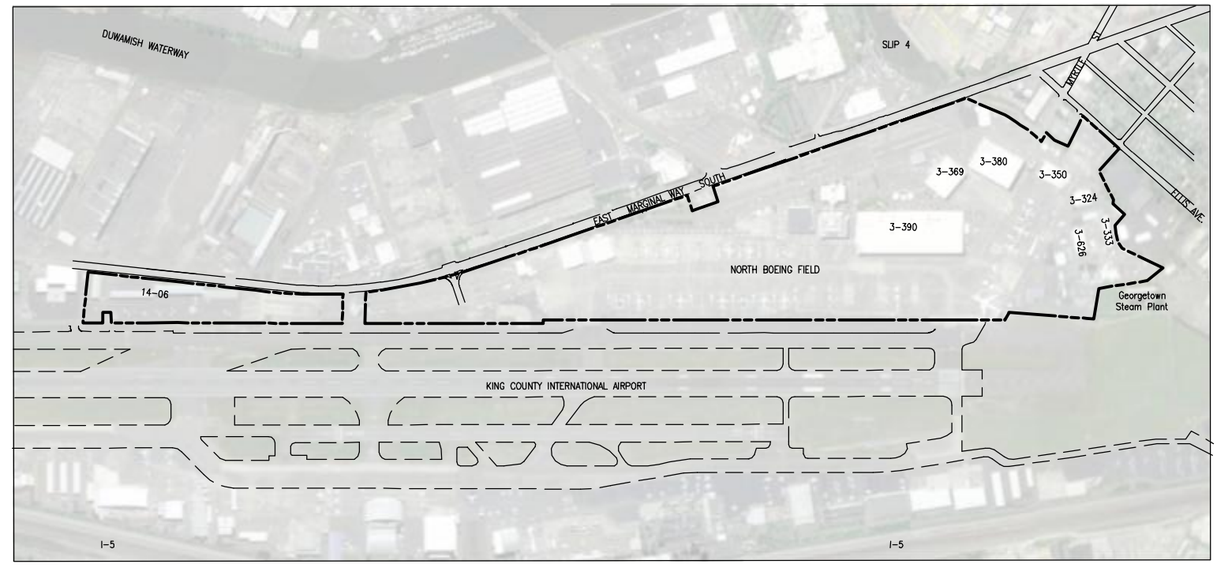

SITE MAP
SCALE: 1" = 500'

DRAWING LIST

SHEET NO.	TITLE
G101	COVER SHEET
G102	ONSITE AND OFFSITE DRAINAGE BASIN MAP
C504	STORMWATER CONVEYANCE, PLAN VIEW
C505	TREATMENT SYSTEM, PLAN VIEW
C506	STORM DRAIN MODIFICATIONS, PLAN VIEW
M502	TREATMENT SYSTEM PIPING LAYOUT, PLAN VIEW
M503	TREATMENT SYSTEM PIPING SECTIONS
M504	TREATMENT SYSTEM PIPING DETAILS
M505	TREATMENT SYSTEM TANK DETAILS
K500	PIPING AND INSTRUMENTATION LEGEND, NOTES AND DETAILS
K501	PIPING AND INSTRUMENTATION DIAGRAM STORMWATER COLLECTION AND STORAGE
K502	PIPING AND INSTRUMENTATION DIAGRAM STORMWATER TREATMENT AND DISCHARGE
K503	STORMWATER TREATMENT PROCESS FLOW DIAGRAM

PROJECT INFORMATION

SITE ADDRESS
7370 EAST MARGINAL WAY SOUTH
SEATTLE, WASHINGTON

REGULATORY LEAD
U.S. EPA REGION 10
1200 SIXTH AVENUE
SUITE 900
SEATTLE, WASHINGTON
MS. KAREN KEELEY
(206) 553-2141

OWNER
THE BOEING COMPANY
MR. CARL BACH
(206) 898-0438

ENGINEER
LANDAU ASSOCIATES, INC.
130 2ND AVENUE SOUTH
EDMONDS, WASHINGTON 98020
MR. JOE KALMAR
(425) 778-0907

LANDAU ASSOCIATES
130 2ND AVENUE S.
EDMONDS, WA. 98020
(425) 778-0907, FAX (425) 778-6409

500' 250' 0 500' 1000'
SCALE IN FEET

RECORD DRAWINGS

SYM	REVISION	BY	APPROVED	DATE	SYM	REVISION	BY	APPROVED	DATE
1	PRE-FINAL DESIGN (60%)	LANDAU	KALMAR	05.02.2011					
2	90% DESIGN	LANDAU	KALMAR	05.27.2011					
3	100% DESIGN	LANDAU	KALMAR	06.23.2011					

BOEING®

ACCEPTABILITY
THIS DESIGN AND/OR SPECIFICATION IS APPROVED

APPROVED BY	DEPT.	DATE

		DATE
DRAWN	B.TAYLOR	06.23.2011
CHECKED	J.KALMAR	06.23.2011
ENGINEER	R. LUDWIG	06.23.2011
CHECKED		
APPROVED	J.KALMAR	
APPROVED		

SUBTITLE: LONG-TERM STORMWATER TREATMENT SYSTEM

TITLE: COVER SHEET

CIVIL MASTER COL. NBF

CURRENT REVISION	SYMBOL	DATE
	D	06.23.2011

SHEET: G101

JOB NO.

COMP NO.

DWG NO. 3-YD-G101.DWG

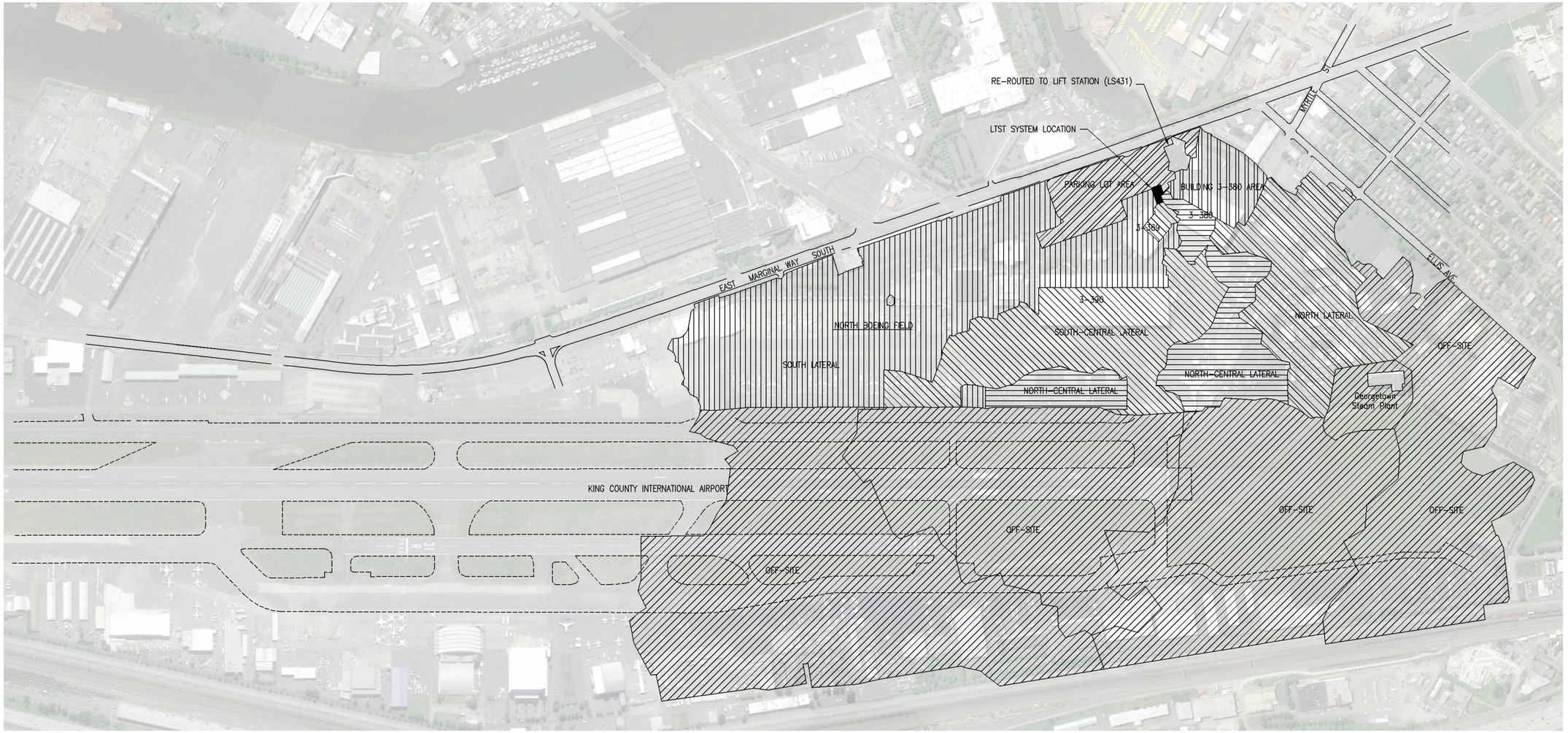

DRAINAGE BASIN MAP

SCALE: 1" = 300'

LEGEND

- OFF-SITE
- DRAINAGE TO SANITARY SEWER
- BUILDING 3-380 AREA
- NORTH-CENTRAL LATERAL
- RE-ROUTED TO LIFT STATION (LS431)
- NORTH LATERAL
- PARKING LOT AREA (DOWNSTREAM OF KING COUNTY LIFT STATION, LS431)
- SOUTH-CENTRAL LATERAL
- SOUTH LATERAL

NORTH BOEING FIELD STORMWATER DRAINAGE BASIN AREAS	ONSITE AREA (ACRES)	OFFSITE AREA (ACRES)	TOTAL AREA (ACRES)
NORTH LATERAL (EXCLUDING STEAM PLANT AREA)	18.1	37.0	55.1
NORTH LATERAL STEAM PLANT ONLY – NO ROOF	0.0	4.1	4.1
NORTH-CENTRAL LATERAL	14.7	42.6	57.3
SOUTH-CENTRAL LATERAL	21.9	42.7	64.6
SOUTH LATERAL	46.3	64.3	110.6
BUILDING 3-380 AREA	4.6	0.0	4.6
RE-ROUTED TO LIFT STATION (LS431)	0.5	0.0	0.5
TOTAL DRAINAGE AREA TO LIFT STATION (LS431)	106.1	190.7	296.7
PARKING LOT AREA (DOWNSTREAM OF KC LIFT STATION)	6.3	0.0	6.3
SANITARY SEWER <0.1 ACRES			
GEORGETOWN STEAM PLANT ROOF = 0.5 ACRES			

300' 150' 0 300' 500'
SCALE IN FEET

LANDAU ASSOCIATES
130 2ND AVENUE S.
EDMONDS, WA. 98020
(425) 778-0907, FAX (425) 778-6409

SYM	REVISION	BY	APPROVED	DATE	SYM	REVISION	BY	APPROVED	DATE
1	PRE-FINAL DESIGN (60%)	LANDAU	KALMAR	05.02.2011					
2	90% DESIGN	LANDAU	KALMAR	05.27.2011					
3	100% DESIGN	LANDAU	KALMAR	06.23.2011					

BOEING

ACCEPTABILITY
THIS DESIGN AND/OR SPECIFICATION IS APPROVED

APPROVED BY	DEPT.	DATE

		DATE
DRAWN	B.TAYLOR	06.23.2011
CHECKED	J.KALMAR	06.23.2011
ENGINEER	R. LUDWIG	06.23.2011
CHECKED		
APPROVED	J.KALMAR	06.23.2011
APPROVED		

RECORD DRAWINGS

SUBTITLE: LONG-TERM STORMWATER TREATMENT SYSTEM

TITLE: ONSITE AND OFFSITE DRAINAGE BASIN MAP

CIVIL MASTER COL. NBF

CURRENT REVISION	SYMBOL	DATE
	D	06.23.2011

SHEET: G102

JOB NO.

COMP NO.

DWG NO. 3-YD-G102.DWG

PIPING SYMBOLS

- LINE MIXER
- RS REMOVABLE SPOOL
- DIAPHRAGM SEAL
- "Y" TYPE STRAINER
- CONE STRAINER
- BASKET STRAINER
- THIEF HATCH
- OPEN SPECTACLE BLIND
- CLOSED SPECTACLE BLIND
- UNION
- HOSE CONNECTION
- OPEN DRAIN
- OPEN DRAIN WITH LIQUID SEAL
- CONCENTRIC REDUCER
- ECCENTRIC REDUCER
- SPECIFICATION BREAK
- LINE NUMBER CHANGE
- PC AUTOMATIC DUMP TRAP (STEAM TRAP)
- FIRE HOSE REEL
- FIRE HYDRANT
- FIRE SPRINKLER HEADS
- VENT TO ATMOSPHERE
- VENT WITH FLAME ARRESTOR
- RUPTURE DISC
- QUICK DISCONNECT
- FLEXIBLE COUPLING
- FLOW ELEMENT (VENTURI OR NOZZLE)
- FLOW ELEMENT (ELECTROMAGNETIC)
- FLOW ELEMENT (TURBINE METER)
- FLOW ELEMENT (PITOT TUBE)
- FLOW STRAIGHTENING VANES
- EJECTOR/EDUCTOR
- EXPANSION JOINT
- WELD CAP
- SCD. CAP
- BLIND FLANGE
- A PULSATION DAMPENER
- BACKFLOW PREVENTOR
- CALIBRATION TUBE
- EMERGENCY SHOWER AND EYE WASH

LINE SYMBOLS

- MAIN PROCESS
- SECONDARY PROCESS
- EXISTING LINES
- LINES TO BE DISMANTLED
- FUTURE
- SKID OR PACKAGE LIMIT
- CAPILLARY TUBE
- LINES FROM (DRAWING NO. IN BOX)
- LINES TO (DRAWING NO. IN BOX)
- TELEPHONE TELEMETRY SIGNAL
- ELECTRIC SIGNAL
- PNEUMATIC SIGNAL
- FLANGED FITTINGS
- SCREWED FITTINGS
- INSULATED LINE
- INSULATED HEAT TRACED LINE

VALVE SYMBOLS

- GATE VALVE (OR MISCELLANEOUS VALVE)
- PLUG VALVE
- BALL VALVE (OR MISCELLANEOUS VALVE)
- GLOBE VALVE
- BUTTERFLY VALVE
- CHECK VALVE
- DIAPHRAGM VALVE
- NEEDLE VALVE
- FOUR-WAY VALVE
- THREE-WAY VALVE
- ANGLE VALVE
- DIAPHRAGM ACTUATED CONTROL VALVE
- PRESSURE REGULATOR (SELF CONTAINED)
- BACK PRESSURE REGULATOR (SELF CONTAINED)
- PISTON-OPERATED VALVE
- SOLENOID VALVE
- MOTORIZED VALVE
- PRESSURE RELIEF VALVE
- VACUUM RELIEF VALVE
- COMBINATION AIR/VACUUM RELIEF VALVE

INSTRUMENT SYMBOLS

- LOCALLY MOUNTED INSTRUMENT/LOCAL DISPLAY
- CENTRAL CONTROL PANEL MOUNTED INSTRUMENT
- REAR OF PANEL MOUNTED INSTRUMENT
- FUNCTIONAL PLC
- FUNCTIONAL PROCESS COMPUTER
- UNDEFINED INTERLOCK LOGIC
- FUNCTION/ALARM LIGHT

EXAMPLE:

- FQI 101 FLOW TOTALIZING INDICATOR NO. 101

EQUIPMENT SYMBOLS

- METERING PUMP
- PUMP, CENTRIFUGAL
- ELECTRIC SUBMERSIBLE PUMP
- WELL PUMP
- INLINE DUCT HEATER
- BLOWER, w/ SILENCER
- MIXER
- TANK, OPEN
- TANK, CLOSED (NON-PRESSURE)
- PRESSURE VESSEL
- PRESSURE VESSEL WITH PACKED BED (SPECIFY BED MATERIAL)
- HEAT EXCHANGER
- EXHAUST FAN
- CELLULAR OR RADIO FREQUENCY TELEMETRY SIGNAL AND ANTENNA
- LEVEL PROBE

LINE IDENTIFICATION SYSTEM

GW101-2"-GALV-000

- LETTERS LINE IDENTIFICATION
- LINE NUMBER
- LINE SIZE
- PIPING SPECIFICATION OR PIPING ABBREVIATION
- CODE DESIGNATING INSULATION

EXAMPLE:
TWO INCH, NON-INSULATED, GALV GROUNDWATER LINE NO. 101

INSTRUMENT IDENTIFICATION TABLE

	FIRST LETTER		SUCCEEDING LETTERS		
	MEASURED OR INITIATING VARIABLE	MODIFIER	READOUT OR PASSIVE FUNCTION	OUTPUT FUNCTION	MODIFIER
A	ANALYSIS		ALARM		
B	BURNER, COMBUSTION		USER'S CHOICE	USER'S CHOICE	USER'S CHOICE
C	USER'S CHOICE			CONTROL	
D	USER'S CHOICE	DIFFERENTIAL			
E	VOLTAGE		SENSOR (PRIMARY ELEMENT)		
F	FLOW RATE	RATIO (FRACTION)			
G	GENERAL (SYSTEM)		GLASS, VIEWING DEVICE		
H	HAND				HIGH
I	CURRENT (ELECTRIC)		INDICATE		
J	POWER	SCAN			
K	TIME, TIME SCHEDULE	TIME RATE OF CHANGE		CONTROL STATION	
L	LEVEL		LIGHT		LOW
M	USER'S CHOICE	MOMENTARY			MIDDLE, INTERMEDIATE
N	TURBIDITY		USER'S CHOICE	USER'S CHOICE	USER'S CHOICE
O	USER'S CHOICE		ORIFICE, RESTRICTION		
P	PRESSURE, VACUUM		POINT (TEST) CONNECTION		
Q	QUANTITY	INTEGRATE, TOTALIZE			
R	RADIATION		RECORD		
S	SPEED, FREQUENCY	SAFETY		SWITCH	
T	TEMPERATURE			TRANSMIT	
U	MULTIVARIABLE		MULTIFUNCTION	MULTIFUNCTION	MULTIFUNCTION
V	VIBRATION, MECHANICAL ANALYSIS			VALVE, DAMPER, LOUVER	
W	WEIGHT, FORCE		WELL		
X	UNCLASSIFIED	X AXIS	UNCLASSIFIED	UNCLASSIFIED	UNCLASSIFIED
Y	EVENT, STATE OR PRESENCE	Y AXIS		RELAY, COMPUTE, CONVERT	
Z	POSITION, DIMENSION	Z AXIS		DRIVER, ACTUATOR, UNCLASSIFIED FINAL CONTROL ELEMENT	

ABBREVIATIONS

LINE IDENTIFICATION LETTERS

AC	ACID
AI	INSTRUMENT AIR
AT	TREATED AIR
AU	UTILITY AIR
AV	AIR VENT
BD	BLOWDOWN
BFW	BOILER FEED WATER
BW	BACKWASH WATER
CA	CAUSTIC
CH	STEAM CONDENSATE
CW	COOLING WATER
CWR	COOLING WATER RETURN
CWS	COOLING WATER SUPPLY
DIW	DEIONIZED WATER
DR	DRAIN
DW	DRINKING (POTABLE) WATER
ELL	90° ELBOW
FG	FUEL GAS
FO	FUEL OIL
FW	FRESH WATER
FWL	FIREWATER LINE
GD	GRAVITY DRAIN
GW	GROUNDWATER
K	CHEMICAL ADDITIVE
N	NITROGEN
OD	DRY OIL
OS	OIL SLOP
O	OIL
R	REFRIGERANT
S	STEAM
SA	SODA ASH
SFW	SOFT WATER
SR	SPENT REGEN.
SS	SANITARY SEWER
SW	STORMWATER
V	VENT
VA	VACUUM
WR	RECLAIMED WATER
WT	TREATED WATER
WW	WASTE WATER

PIPING ABBREVIATIONS

ABS	ACRYLONITRILE BUTADIENE STYRENE
AC	ASBESTOS CEMENT
CI	CAST IRON
CM	CORRUGATED METAL
CPVC	CHLORINATED POLYVINYL CHLORIDE
CU	COPPER
DC	DOUBLE CONTAINMENT
DI	DUCTILE IRON
FRP	FIBERGLASS REINFORCED PLASTIC
GALV	GALVANIZED STEEL
HDPE	HIGH DENSITY POLYETHYLENE
NYL	NYLON
PP	POLYPROPYLENE
PVC	POLYVINYL CHLORIDE
RU	RUBBER HOSE
SD	STEEL DUCT
SS	STAINLESS STEEL
STL	STEEL
TEF	TEFLON
VC	VITRIFIED CLAY

GENERAL IDENTIFICATIONS

FC	FAIL CLOSED
FO	FAIL OPEN
H-O-A	HAND-OFF-AUTOMATIC
NC	NORMALLY CLOSED
NO	NORMALLY OPEN
ST	SAMPLE TAP
TR	TELEMETRY RECEIVER
TT	TELEMETRY TRANSMITTER
VFD	VARIABLE FREQUENCY DRIVE

EQUIPMENT DESIGNATIONS

AS	AIR STRIPPER
B	BLOWER
C	COLUMN
CP	CONTROL PANEL
D	DRUMS & POTS
DH	DUCT HEATER
E	HEAT EXCHANGER
F	FILTER
FE	FLOW ELEMENT
FH	FIRED HEATER OR BOILER
FQIT	FLOW TOTALIZING INDICATING TRANSMITTER
G	ELECTRIC POWER GENERATOR
GAC	GRANULAR ACTIVATED CARBON
GT	GAS TURBINE
K	COMPRESSOR
KR	TIMER DELAY
LAH	LEVEL ALARM HIGH
LI	LEVEL INDICATOR
LSH	LEVEL SWITCH LOW
M	MISCELLANEOUS EQUIPMENT
P	PUMP
PI	PRESSURE INDICATOR
PAL	PRESSURE ALARM LOW
PLC	PROGRAMMABLE LOGIC COMPUTER
PSL	PRESSURE SWITCH HIGH
T	TANK (ATMOSPHERIC VESSEL)
V	PRESSURE VESSEL
W	WELL

PIPING INSULATION

000	NO INSULATION
001	INSULATION
002	INSULATION WITH HEAT TRACING

LANDAU ASSOCIATES
130 2ND AVENUE S.
EDMONDS, WA. 98020
(425) 778-0907, FAX (425) 778-6409

RECORD DRAWINGS

SYM	REVISION	BY	APPROVED	DATE	SYM	REVISION	BY	APPROVED	DATE
1	PRE-FINAL DESIGN (60%)	LANDAU	KALMAR	05.02.2011					
2	90% DESIGN	LANDAU	KALMAR	05.27.2011					
3	100% DESIGN	LANDAU	KALMAR	06.23.2011					

BOEING

ACCEPTABILITY THIS DESIGN AND/OR SPECIFICATION IS APPROVED

APPROVED BY	DEPT.	DATE

		DATE
DRAWN	B.TAYLOR	06.23.2011
CHECKED	M. VALERI	06.23.2011
ENGINEER	J.KALMAR	06.23.2011
CHECKED		
APPROVED	J.KALMAR	06.23.2011
APPROVED		

SUBTITLE: LONG-TERM STORMWATER TREATMENT SYSTEM

TITLE: PIPING AND INSTRUMENTATION LEGEND, NOTES AND DETAILS

CIVIL MASTER COL. NBF

CURRENT REVISION	SYMBOL	DATE
	D	06.23.2011

SHEET: K500

JOB NO. | COMP NO.

DWG NO. 3-YD-K500.DWG

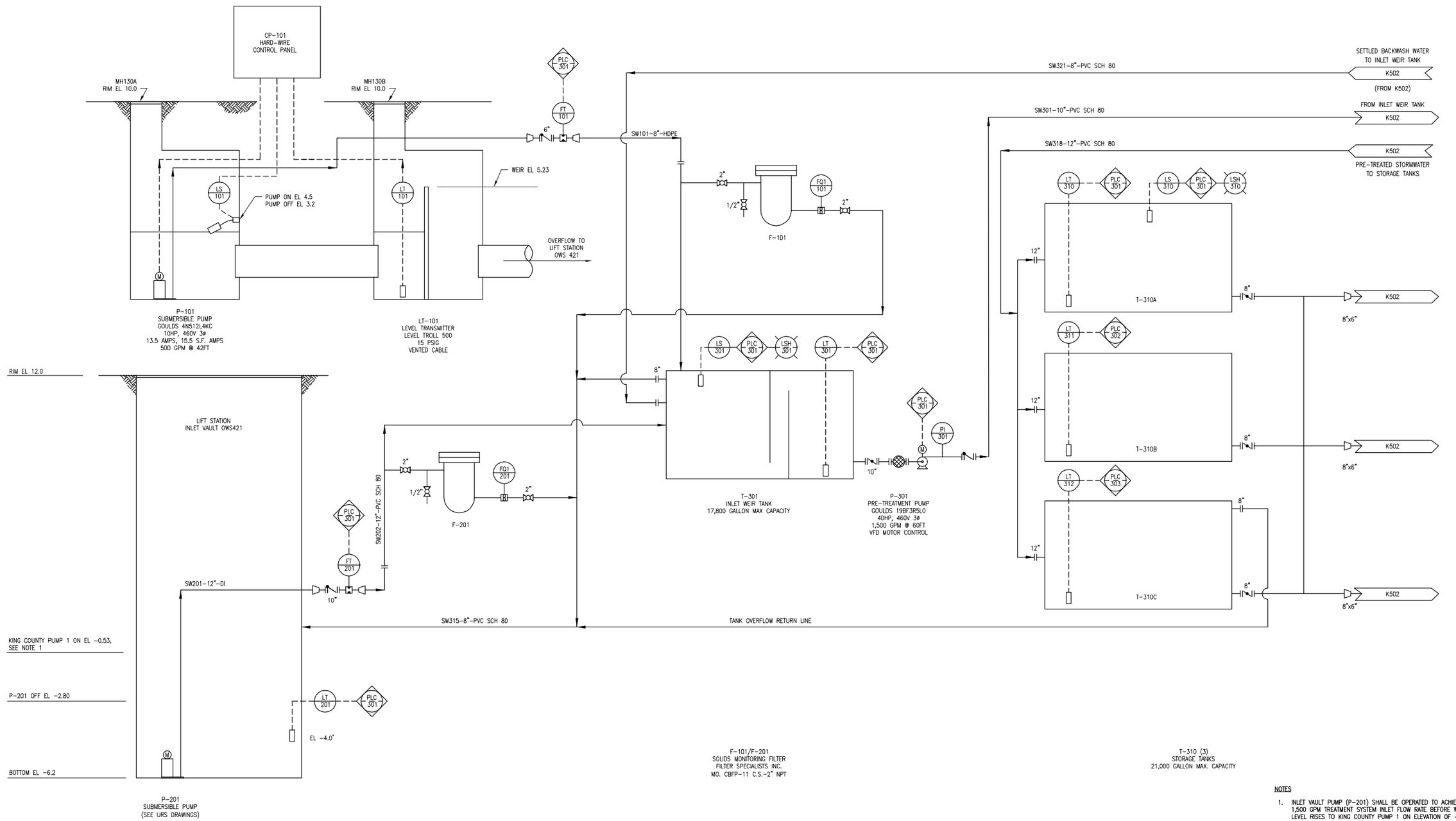

NOTES

1. INLET VAULT PUMP (P-201) SHALL BE OPERATED TO ACHIEVE FULL 1,500 GPM TREATMENT SYSTEM INLET FLOW RATE BEFORE WATER LEVEL RISES TO KING COUNTY PUMP 1 ON ELEVATION OF -0.53 FT.
2. HIGH TANK LEVEL SWITCHES (LS-301, LS-310) SHALL BE MOUNTED TO ACTIVATE A HIGH LEVEL SHUTDOWN ALARM AT 1" BELOW TANK OVERFLOW PIPE ELEVATION.
3. INSERT STRAINER WAS PROVIDED WITH 1/2" PERFORATION OPENINGS.

LANDAU ASSOCIATES
130 2ND AVENUE S.
EDMONDS, WA. 98020
(425) 778-0907, FAX (425) 778-6409

PIPING AND INSTRUMENTATION DIAGRAM

SCALE: N.T.S.

RECORD DRAWINGS

SYM	REVISION	BY	APPROVED	DATE	SYM	REVISION	BY	APPROVED	DATE
1	PRE-FINAL DESIGN (60%)	LANDAU	KALMAR	05.02.2011					
2	90% DESIGN	LANDAU	KALMAR	05.27.2011					
3	100% DESIGN	LANDAU	KALMAR	06.23.2011					

BOEING

ACCEPTABILITY
THIS DESIGN AND/OR SPECIFICATION IS APPROVED

APPROVED BY	DEPT.	DATE

		DATE
DRAWN	B.TAYLOR	06.23.2011
CHECKED	M. VALERI	06.23.2011
ENGINEER	J.KALMAR	06.23.2011
CHECKED		
APPROVED	J.KALMAR	06.23.2011
APPROVED		

SUBTITLE: LONG-TERM STORMWATER TREATMENT SYSTEM

TITLE: PIPING AND INSTRUMENTATION DIAGRAM
STORMWATER COLLECTION & STORAGE

CIVIL MASTER COL. NBF

CURRENT REVISION	SYMBOL	DATE
	D	06.23.2011

SHEET: K501

JOB NO.

COMP NO.

DWG NO. 3-YD-K501.DWG

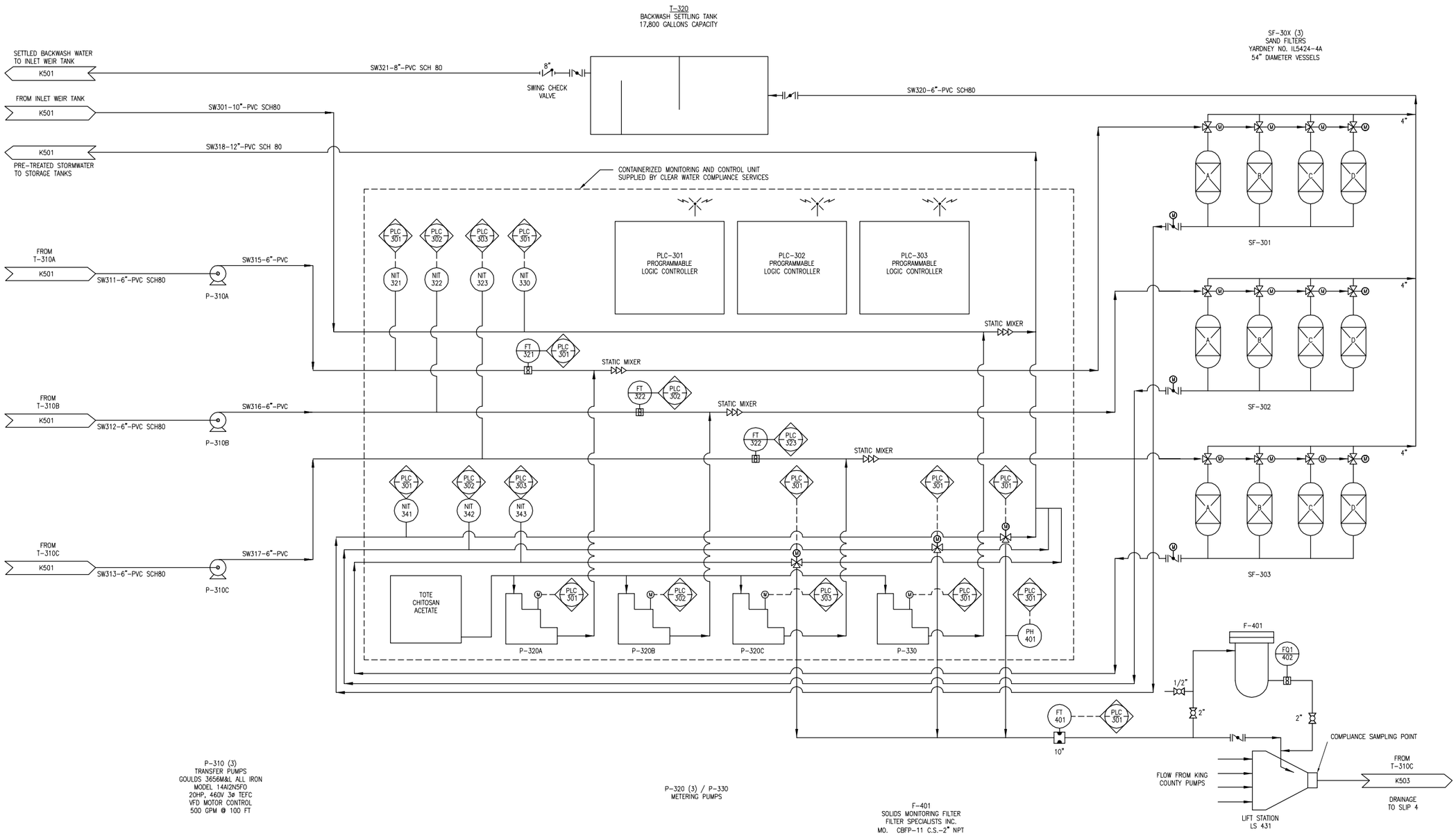

P-310 (3)
TRANSFER PUMPS
GOULDS 3656M&L ALL IRON
MODEL 14N2N5F0
20HP, 460V 3ø TEFC
VFD MOTOR CONTROL
500 GPM @ 100 FT

P-320 (3) / P-330
METERING PUMPS

F-401
SOLIDS MONITORING FILTER
FILTER SPECIALISTS INC.
MO. CBFP-11 C.S.-2" NPT

LANDAU ASSOCIATES
130 2ND AVENUE S.
EDMONDS, WA. 98020
(425) 778-0907, FAX (425) 778-6409

PIPING AND INSTRUMENTATION DIAGRAM

SCALE: N.T.S.

RECORD DRAWINGS

SYM	REVISION	BY	APPROVED	DATE	SYM	REVISION	BY	APPROVED	DATE
1	PRE-FINAL DESIGN (60%)	LANDAU	KALMAR	05.02.2011					
2	90% DESIGN	LANDAU	KALMAR	05.27.2011					
3	100% DESIGN	LANDAU	KALMAR	06.23.2011					

BOEING

ACCEPTABILITY
THIS DESIGN AND/OR SPECIFICATION IS APPROVED

APPROVED BY	DEPT.	DATE

		DATE
DRAWN	B.TAYLOR	06.23.2011
CHECKED	M. VALERI	06.23.2011
ENGINEER	J.KALMAR	06.23.2011
CHECKED		
APPROVED	J.KALMAR	06.23.2011
APPROVED		

SUBTITLE
LONG-TERM STORMWATER TREATMENT SYSTEM

TITLE
PIPING AND INSTRUMENTATION DIAGRAM
STORMWATER TREATMENT AND DISCHARGE

CIVIL MASTER COL. NBF

CURRENT REVISION	SYMBOL	DATE
	D	06.23.2011

SHEET K502

JOB NO.

COMP NO.

DWG NO. 3-YD-K502.DWG

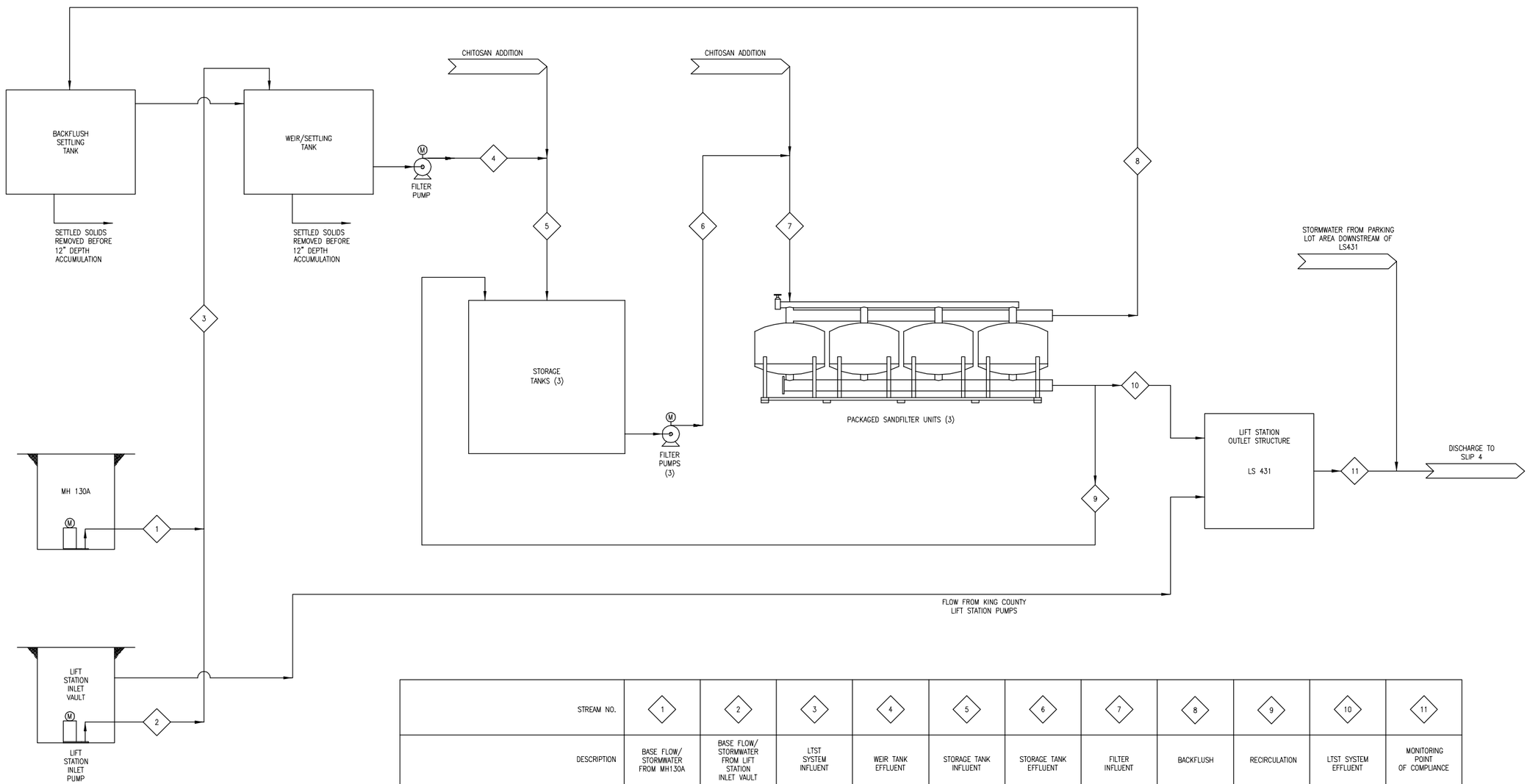

STREAM NO.	1	2	3	4	5	6	7	8	9	10	11
DESCRIPTION	BASE FLOW/ STORMWATER FROM MH130A	BASE FLOW/ STORMWATER FROM LIFT STATION INLET VAULT	LTST SYSTEM INFLUENT	WEIR TANK EFFLUENT	STORAGE TANK INFLUENT	STORAGE TANK EFFLUENT	FILTER INFLUENT	BACKFLUSH	RECIRCULATION	LTST SYSTEM EFFLUENT	MONITORING POINT OF COMPLIANCE
DESIGN FLOW (gpm)	500	1000	1500	1650	1650	1650	1650	0/239*	0/500*	1500	VARIES
TSS (mg/L)	<20	<150	<110	<110	<110	<110	<110	VARIES	VARIES	<2.0	N/A
PCBs (µg/L)	<0.2	<0.1	<0.2	<0.2	<0.2	<0.2	<0.2	VARIES	VARIES	<0.030	<0.030
TURBIDITY (NTU)	<200	<200	<200	<200	<200	<200	<200	VARIES	≥5	<5	N/A
CHITOSAN (ppm)	0	0	0	0	0.2	≤0.2	≤0.67	VARIES	VARIES	<0.2	<0.2
PRESSURE (psi)	19	–	10	26	18	45	32	10	10	10	N/A

* MIN / MAX OF SHORT-TERM INTERMITTENT FLOWS.

LANDAU ASSOCIATES
130 2ND AVENUE S.
EDMONDS, WA. 98020
(425) 778-0907, FAX (425) 778-6409

PROCESS FLOW DIAGRAM

SCALE: N.T.S.

RECORD DRAWINGS

SYM	REVISION	BY	APPROVED	DATE	SYM	REVISION	BY	APPROVED	DATE
1	PRE-FINAL DESIGN (60%)	LANDAU	KALMAR	05.02.2011					
2	90% DESIGN	LANDAU	KALMAR	05.27.2011					
3	100% DESIGN	LANDAU	KALMAR	06.23.2011					

BOEING®

ACCEPTABILITY THIS DESIGN AND/OR SPECIFICATION IS APPROVED

APPROVED BY	DEPT.	DATE

DRAWN B.TAYLOR	DATE 05.072.2011	
CHECKED M. VALERI	06.23.2011	
ENGINEER J.KALMAR	06.23.2011	
CHECKED		
APPROVED J.KALMAR	06.23.2011	
APPROVED		

SUBTITLE: LONG-TERM STORMWATER TREATMENT SYSTEM

TITLE: STORMWATER TREATMENT PROCESS FLOW DIAGRAM

CIVIL MASTER COL. NBF

CURRENT REVISION	SYMBOL	DATE
	D	06.23.2011
SHEET		
K503		
JOB NO.		COMP NO.
DWG NO. 3-YD-K503.DWG		

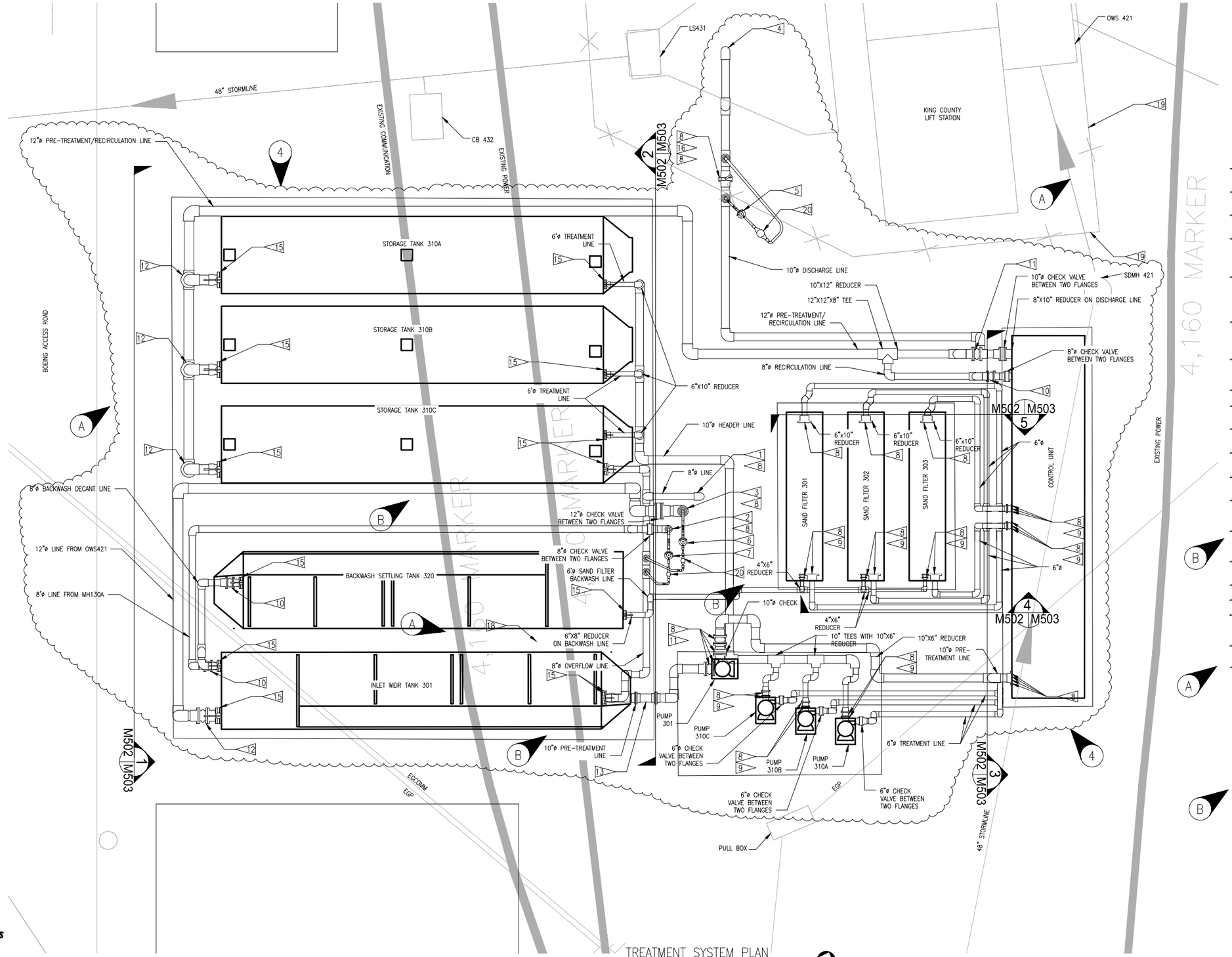

CONSTRUCTION NOTES

1. 8"ø OVERFLOW LINE. FLANGED PIPE CONNECTION INSTALLED BY OTHERS.
2. 8"ø PRESSURE PIPE FROM MH130A. FLANGED PIPE CONNECTION INSTALLED BY OTHERS.
3. 12"ø PRESSURE PIPE FROM OWS421. FLANGED PIPE CONNECTION INSTALLED BY OTHERS.
4. 10"ø OUTLET PIPE LOCATION. SEE DETAIL 4 M502 M504
5. EFFLUENT FILTER BAG ASSEMBLY. SEE DETAIL 1 M502 M504
6. INFLUENT OWS FILTER BAG ASSEMBLY. SEE DETAIL 2 M502 M504
7. INFLUENT MH130A FILTER BAG ASSEMBLY. SEE DETAIL 3 M502 M504
8. INSTALL FLANGED CONNECTION.
9. INSTALL 6"ø PROCO MOLDED WIDE ARCH EXPANSION JOINT MODEL NUMBER 261R, OR APPROVED EQUIVALENT, BETWEEN FLANGES.
10. INSTALL 8"ø PROCO MOLDED WIDE ARCH EXPANSION JOINT MODEL NUMBER 261R, OR APPROVED EQUIVALENT, BETWEEN FLANGES.
11. INSTALL 10"ø PROCO MOLDED WIDE ARCH EXPANSION JOINT MODEL NUMBER 261R, OR APPROVED EQUIVALENT, BETWEEN FLANGES.
12. INSTALL 12"ø PROCO MOLDED WIDE ARCH EXPANSION JOINT MODEL NUMBER 261R, OR APPROVED EQUIVALENT, BETWEEN FLANGES.
13. 10" BASKET STRAINER ASSEMBLY. SEE DETAIL 5 M502 M504
14. NOT USED.
15. BUTTERFLY VALVE AND FLANGED CONNECTION SUPPLIED BY TANK MANUFACTURER.
16. INSTALL 10"ø BUTTERFLY VALVE.
17. INSTALL PIPE SUPPORT.
18. EXISTING ELECTRICAL PULL VAULT. THE FOUR NORTHERN TANKS MOVED 3 FEET NORTHERLY TO MAINTAIN ACCESS TO THE VAULT. RAISE RIM OF VAULT TO FINISHED GRADE.
19. RELOCATE, AS NECESSARY, EXISTING CHAIN LINK FENCE TOWARDS THE PUMP STATION FOR PROPOSED VAULTS PER URS PLAN SHEETS.
20. FLOW METERS

GENERAL NOTES

1. PIPE AND EQUIPMENT SHALL HAVE FREEZE PROTECTION INSTALLED. FREEZE PROTECTION INCLUDES RECIRCULATION OF WATER WITHIN THE PIPES WHEN TEMPERATURES GET BELOW FREEZING AND DRAINING SPIGOTS INSTALLED AT KEY LOCATIONS.

5' 2.5' 0 5' 10'
SCALE IN FEET

TREATMENT SYSTEM PLAN
SCALE: 1" = 5'

LANDAU ASSOCIATES
130 2ND AVENUE S.
EDMONDS, WA. 98020
(425) 778-0907, FAX (425) 778-6409

RECORD DRAWINGS

SYM	REVISION	BY	APPROVED	DATE	SYM	REVISION	BY	APPROVED	DATE
1	PRE-FINAL DESIGN (60%)	LANDAU	KALMAR	05.02.2011	4	AS-BUILT	LANDAU		12.08.2011
2	90% DESIGN	LANDAU	KALMAR	05.27.2011					
3	100% DESIGN	LANDAU	KALMAR	06.23.2011					
A	LTST SYSTEM LAYOUT MODIFICATIONS	R. LUDWIG	J. KALMAR	07.29.2011					
B	BASKET STRAINER AND PIPING MODIFICATIONS	R. LUDWIG	J. KALMAR	08.12.2011					

BOEING®

ACCEPTABILITY
THIS DESIGN AND/OR SPECIFICATION IS APPROVED

APPROVED BY	DEPT.	DATE

		DATE
DRAWN	B.TAYLOR	06.23.2011
CHECKED	J.KALMAR	06.23.2011
ENGINEER	R. LUDWIG	06.23.2011
CHECKED		
APPROVED	J.KALMAR	06.23.2011
APPROVED		

SUBTITLE: LONG-TERM STORMWATER TREATMENT SYSTEM

TITLE: TREATMENT SYSTEM PIPING LAYOUT PLAN VIEW

CIVIL MASTER COL. NBF

CURRENT REVISION: D
DATE: 06.23.2011
SHEET: M502
JOB NO.
COMP NO.
DWG NO. 3-YD-M502.DWG

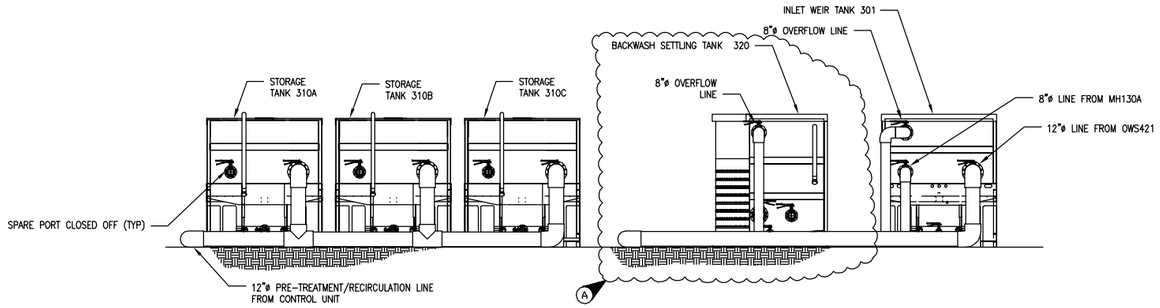

1 M502 C503 TANK SECTION
N.T.S.

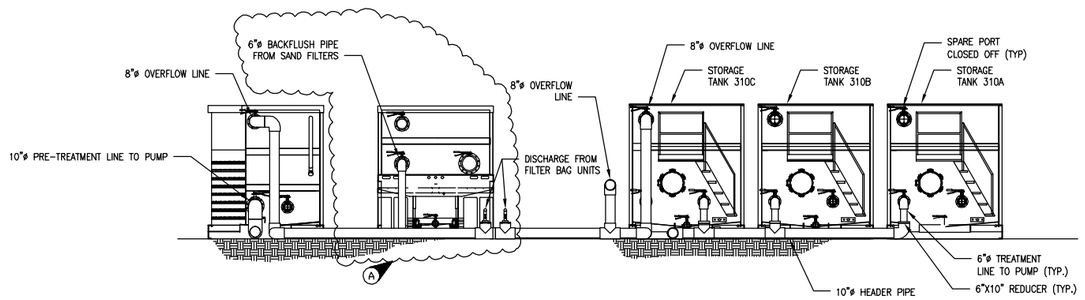

2 M502 C503 TANK SECTION
N.T.S.

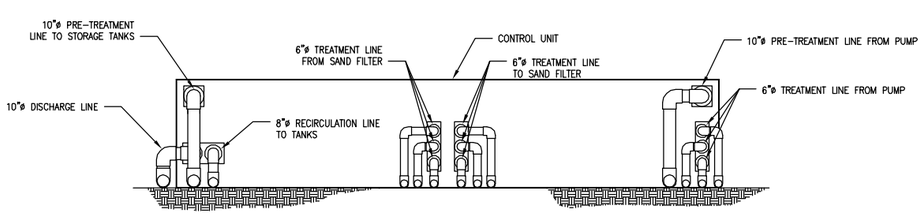

3 M502 C503 CONTROL UNIT SECTION
N.T.S.

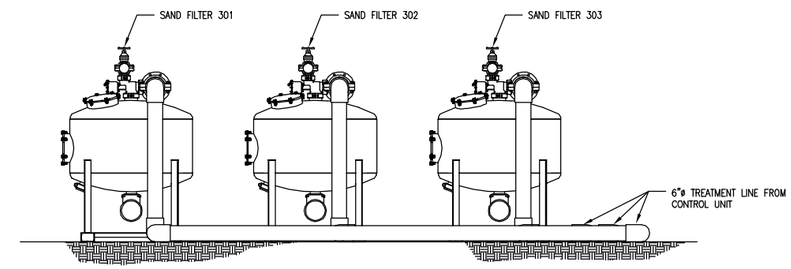

4 M502 C503 SAND FILTER SECTION
N.T.S.

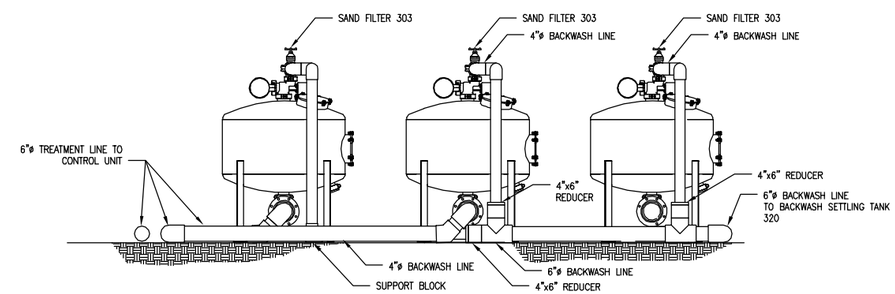

5 M502 C503 SAND FILTER SECTION
N.T.S.

LANDAU ASSOCIATES
130 2ND AVENUE S.
EDMONDS, WA. 98020
(425) 778-0907, FAX (425) 778-6409

SYM	REVISION	BY	APPROVED	DATE	SYM	REVISION	BY	APPROVED	DATE
1	PRE-FINAL DESIGN (60%)	LANDAU	KALMAR	06.23.2011					
2	90% DESIGN	LANDAU	KALMAR	06.23.2011					
3	100% DESIGN	LANDAU	KALMAR	06.23.2011					
A	LTST SYSTEM LAYOUT MODIFICATIONS	R. LUDWIG	J. KALMAR	07.29.2011					

BOEING®

ACCEPTABILITY
THIS DESIGN AND/OR SPECIFICATION IS APPROVED

APPROVED BY	DEPT.	DATE

DRAWN	B.TAYLOR	06.23.2011
CHECKED	J.DAVIS	06.23.2011
ENGINEER	R. LUDWIG	06.23.2011
CHECKED		
APPROVED	J.KALMAR	06.23.2011
APPROVED		

RECORD DRAWINGS

SUBTITLE: LONG-TERM STORMWATER TREATMENT SYSTEM

TITLE: TREATMENT SYSTEM PIPING SECTIONS

CIVIL MASTER COL. NBF

CURRENT REVISION: SYMBOL D — DATE 05.27.2011

SHEET: M503

JOB NO. — COMP NO.

DWG NO. 3-YD-M503.DWG

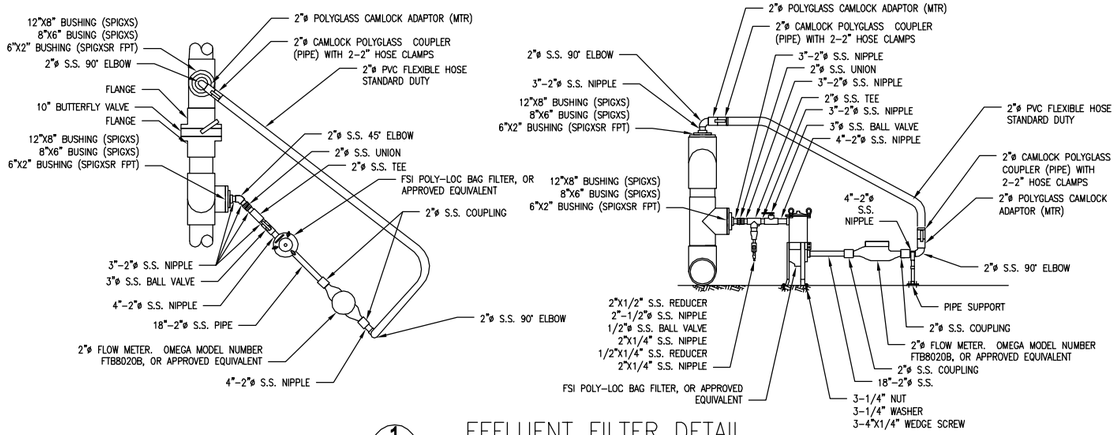

1 M502 C504 EFFLUENT FILTER DETAIL
N.T.S.

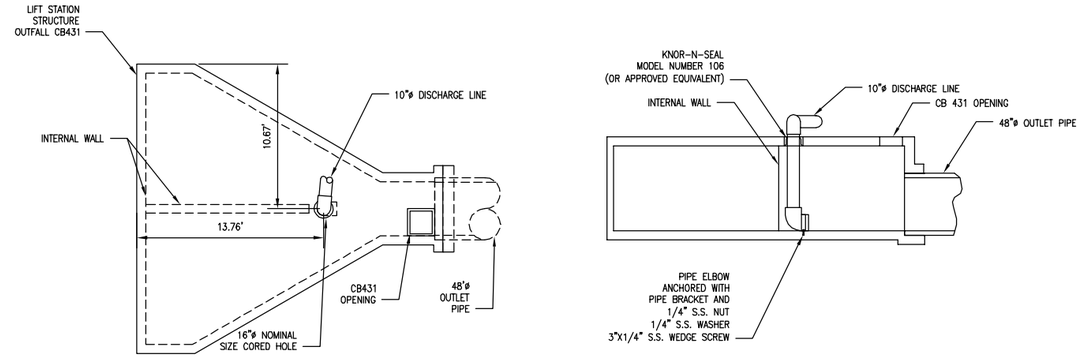

4 M502 C504 OUTLET PIPE PLAN AND PROFILE DETAIL
N.T.S.

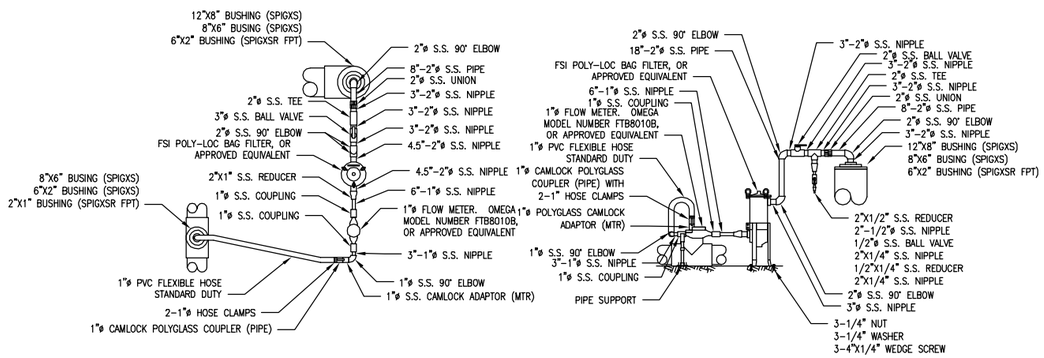

2 M502 C504 INFLUENT OWS FILTER DETAIL
N.T.S.

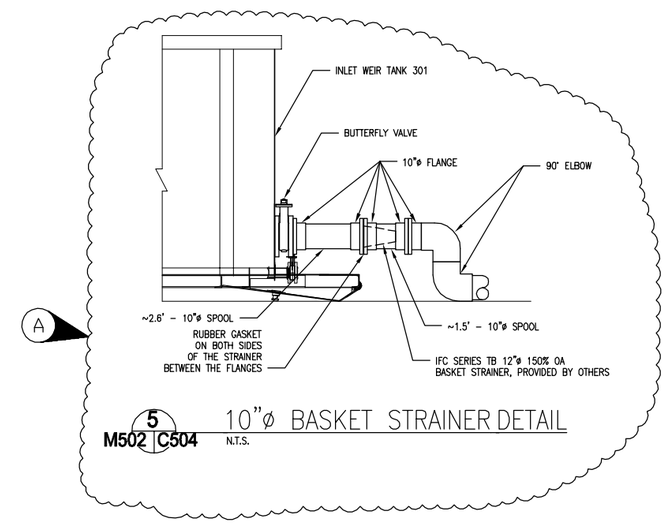

5 M502 C504 10"Ø BASKET STRAINER DETAIL
N.T.S.

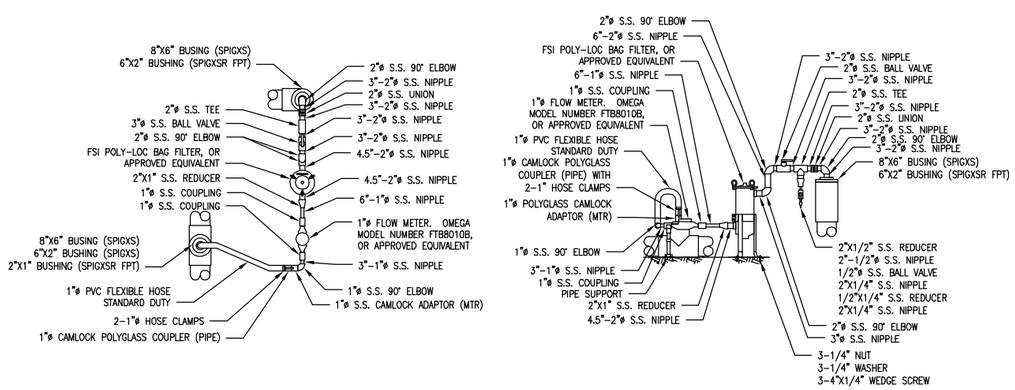

3 M502 C504 INFLUENT MH130A FILTER DETAIL
N.T.S.

LANDAU ASSOCIATES
130 2ND AVENUE S.
EDMONDS, WA. 98020
(425) 778-0907, FAX (425) 778-6409

SYM	REVISION	BY	APPROVED	DATE	SYM	REVISION	BY	APPROVED	DATE
1	PRE-FINAL DESIGN (60%)	LANDAU	KALMAR	05.02.2011					
2	90% DESIGN	LANDAU	KALMAR	05.27.2011					
3	100% DESIGN	LANDAU	KALMAR	06.23.2011					
A	BASKET STRAINER AND PIPE MODIFICATIONS	R. LUDWIG	J. KALMAR	08.12.2011					

BOEING

ACCEPTABILITY
THIS DESIGN AND/OR SPECIFICATION IS APPROVED

APPROVED BY	DEPT.	DATE

DRAWN	B.TAYLOR	06.23.2011
CHECKED	J.DAVIS	06.23.2011
ENGINEER	R. LUDWIG	06.23.2011
CHECKED		
APPROVED	J.KALMAR	06.23.2011
APPROVED		

RECORD DRAWINGS

SUBTITLE: LONG-TERM STORMWATER TREATMENT SYSTEM

TITLE: TREATMENT SYSTEM PIPING DETAILS

CIVIL MASTER COL. NBF

CURRENT REVISION: SYMBOL D — DATE 06.23.2011

SHEET: M504

JOB NO. — COMP NO.

DWG NO. 3-YD-M503.DWG

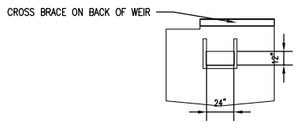

SLUICE GATE DETAIL A

SCALE: N.T.S.

NOTE:
1. SLUICE GATE NOT INCLUDED FOR BACKFLUSH SETTLING TANK.

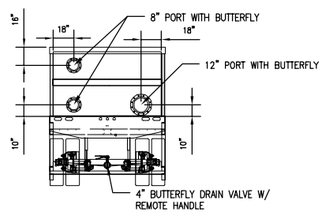

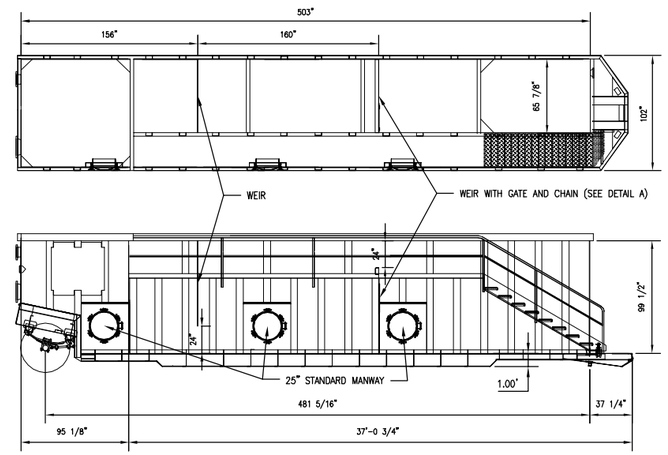

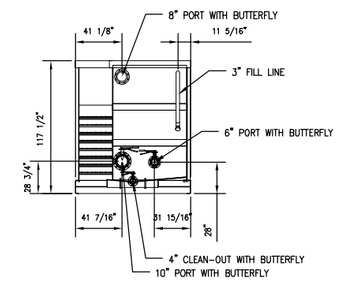

WEIR TANK/BACKFLUSH SETTLING TANK DETAIL

SCALE: N.T.S.

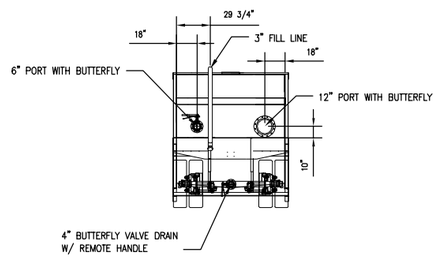

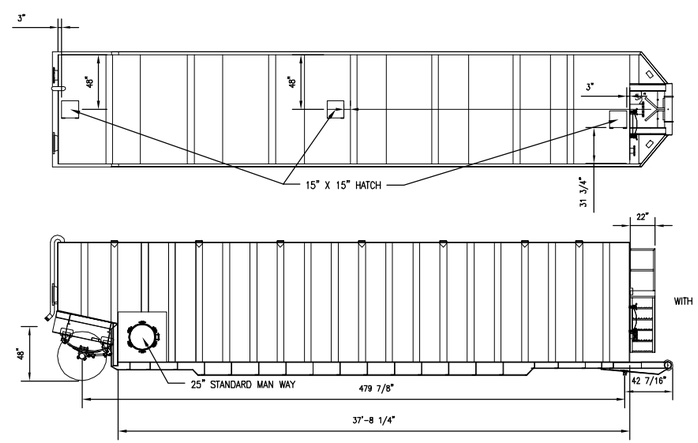

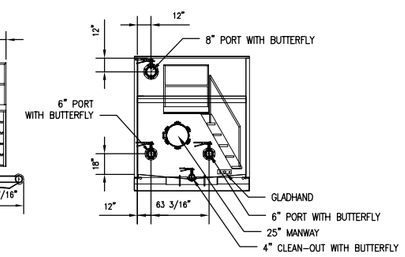

STORAGE TANK DETAIL

SCALE: N.T.S.

LANDAU ASSOCIATES
130 2ND AVENUE S.
EDMONDS, WA. 98020
(425) 778-0907, FAX (425) 778-6409

5' 2.5' 0 5' 10'
SCALE IN FEET

RECORD DRAWINGS

SYM	REVISION	BY	APPROVED	DATE	SYM	REVISION	BY	APPROVED	DATE
1	PRE-FINAL DESIGN (60%)	LANDAU	KALMAR	05.27.2011					
2	90% DESIGN	LANDAU	KALMAR	05.27.2011					
3	100% DESIGN	LANDAU	J.KALMAR	06.23.2011					

BOEING

ACCEPTABILITY
THIS DESIGN AND/OR SPECIFICATION IS APPROVED

APPROVED BY	DEPT.	DATE

		DATE
DRAWN	B.TAYLOR	06.23.2011
CHECKED	J.DAVIS	06.23.2011
ENGINEER	R. LUDWIG	06.23.2011
CHECKED		
APPROVED	J.KALMAR	
APPROVED		

SUBTITLE: LONG-TERM STORMWATER TREATMENT SYSTEM

TITLE: TREATMENT SYSTEM TANK DETAILS

CIVIL MASTER COL. NBF

CURRENT REVISION	SYMBOL	DATE
	D	06.23.2011

SHEET: M505

JOB NO.

COMP NO.

DWG NO. 3-YD-M504.DWG

APPENDIX B

Record Drawings for Storm Drain Re-route and Modifications

3-YD PHASE 2 RE-ROUTE STORMWATER LINES

THE BOEING COMPANY
SEATTLE, WASHINGTON

Boeing Project No. 10012

Record Drawings

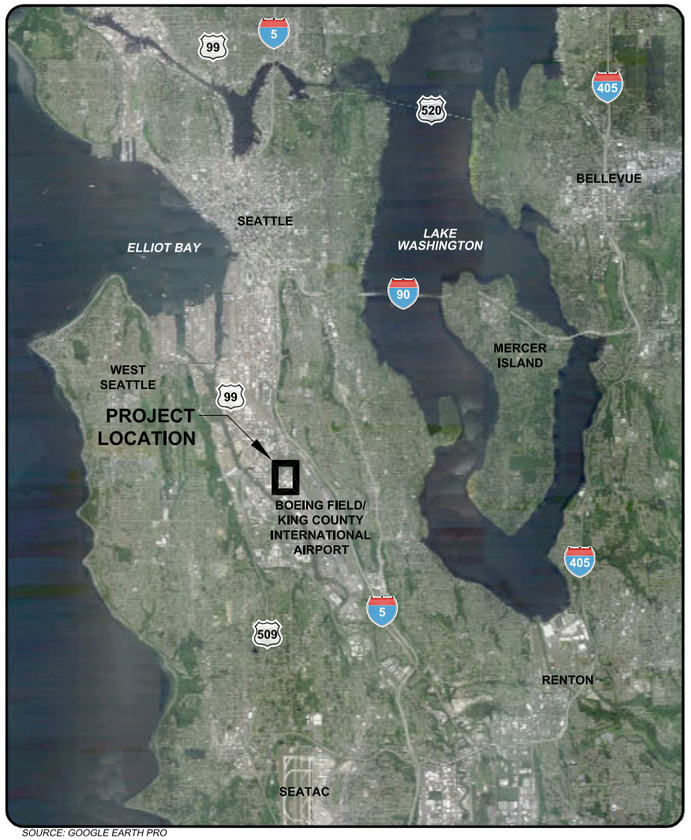

SOURCE: GOOGLE EARTH PRO

VICINITY PLAN
SCALE: NTS

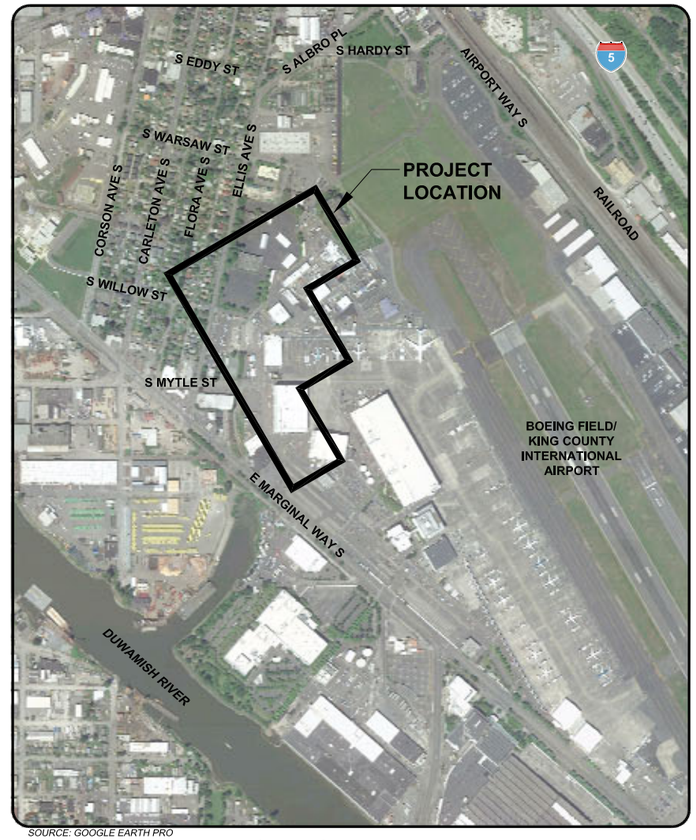

SOURCE: GOOGLE EARTH PRO

PROJECT LOCATION PLAN
SCALE: NTS

DRAWING INDEX

BOEING SHEET NO.	DRAWING TITLE
GENERAL	
3-YD-G0	COVER SHEET
CIVIL	
3-YD-C1	KEY SHEET
3-YD-C294	STORM AND SANITARY SEWER
3-YD-C295	STORM AND SANITARY SEWER
3-YD-C296	STORM AND SANITARY SEWER
3-YD-C300	STORM AND SANITARY SEWER
3-YD-C301	STORM AND SANITARY SEWER
3-YD-C308	STORM AND SANITARY SEWER
3-YD-C450	ENLARGED PAVING PLAN
3-YD-C501	SECTIONS AND DETAILS
3-YD-C502	SECTIONS AND DETAILS
MECHANICAL	
3-YD-M500	SECTIONS AND DETAILS
3-YD-M501	PLAN, ELEVATIONS AND DETAILS
3-YD-M502	SECTIONS AND DETAILS
3-YD-M503	SECTIONS AND DETAILS
ELECTRICAL	
3-YD-E4B	SUB NO.2-LINEUP "B" ONE-LINE DIAGRAM
3-YD-E16	LIGHTING
3-YD-E66	208Y/120V POWER & GROUNDING
3-YD-E116	480V, MEDIUM VOLTAGE
3-YD-E500	SECTIONS AND DETAILS
3-YD-E501	ONE-LINE DIAGRAM
3-YD-E502	DETAILS
3-YD-E503	DETAILS

APPLICABLE CODES & STANDARDS

- CITY OF SEATTLE STANDARD PLANS FOR MUNICIPAL CONSTRUCTION, 2011 EDITION
- CITY OF SEATTLE STANDARD SPECIFICATIONS FOR ROAD, BRIDGE AND MUNICIPAL CONSTRUCTION, 2011 EDITION
- CITY OF SEATTLE STORMWATER MANUAL, 2009 EDITION
- BOEING DRAWING AND DESIGN STANDARDS
- THE 2009 INTERNATIONAL BUILDING CODE WITH 2007 WA AMENDMENTS (WASHINGTON ADMINISTRATIVE CODE (WAC) 51-50)
- NATIONAL ELECTRICAL CODE NFPA 70-2008, WA AMENDMENTS (WAC 296-46B)
- NATIONAL ELECTRICAL SAFETY CODE NESC C2-2007
- INTERNATIONAL FIRE CODE AS ADOPTED BY WAC 51-54
- OCCUPATIONAL SAFETY AND HEALTH STANDARDS, CFR 29, CHAPTER XVII, PART 1910
- WASHINGTON INDUSTRIAL SAFETY AND HEALTH ACT (WISHA), TITLE 296 WAC
- 2005 STORMWATER MANAGEMENT MANUAL FOR WESTERN WASHINGTON
- UNDERWRITERS LABORATORIES (UL)
- INSTITUTE OF ELECTRICAL AND ELECTRONICS ENGINEERS (IEEE)
- NATIONAL ELECTRICAL MANUFACTURERS ASSOCIATION (NEMA)
- AMERICAN NATIONAL STANDARDS INSTITUTE (ANSI)
- AMERICAN WATER WORKS ASSOCIATION (AWWA)
- AMERICAN SOCIETY FOR TESTING AND MATERIALS (ASTM)
- WASHINGTON STATE DEPARTMENT OF TRANSPORTATION (WSDOT) STANDARD SPECIFICATIONS FOR ROAD, BRIDGE, AND MUNICIPAL CONSTRUCTION, 2010 EDITION

PROJECT DIRECTORY

Boeing Shared Services Group — Owner
P.O. Box 3707
Seattle, Washington 98124

URS Corporation
Century Square
1501 4th Avenue, Suite 1400
Seattle, Washington 98101-1616
206-438-2700

Civil Engineering
Geotechnical Engineering
Mechanical Engineering
Electrical Engineering
Structural Engineering

URS 1501 4TH AVENUE, STE. 1400
SEATTLE, WA 98101-1616
TELEPHONE (206) 438-2700

SYM	REVISION	BY	APPROVED	DATE	SYM	REVISION	BY	APPROVED	DATE
A	PHASE 2 RE-ROUTE STORMWATER LINES – 60% DESIGN	URS	CASTRO	04.29.11					
B	PHASE 2 RE-ROUTE STORMWATER LINES – 90% DESIGN	URS	CASTRO	05.27.11					
C	PHASE 2 RE-ROUTE STORMWATER LINES – 100% DESIGN	URS	CASTRO	06.24.11					
D	PHASE 2 RE-ROUTE STORMWATER LINES – RECORD DRAWINGS	URS	CASTRO	02.27.12					

BOEING®

ACCEPTABILITY
THIS DESIGN AND/OR SPECIFICATION IS APPROVED

APPROVED BY	DEPT.	DATE

		DATE
DRAWN	STICKEL	06.24.11
CHECKED		
ENGINEER	CASTRO	06.24.11
CHECKED		
APPROVED		
APPROVED		

SUBTITLE: COVER SHEET

TITLE: PHASE 2 RE-ROUTE STORMWATER LINES
NORTH BOEING FIELD

COL. NBF

CURRENT REVISION	SYMBOL	DATE
	D	06.24.11

SHEET: G0

JOB NO.

COMP NO.

DWG NO. 3.YD-G0

Q:\geo\Boeing\NBFPEL Remediation\Phase 2 Re-Route Storm Lines\R04 (EPA Addutt)\Civil\3-YD-G01 - Cover Sheet.dwg | Mod: 02/22/2012, 11:24 | Plotted: 02/23/2012, 08:39 | Chad_Stickel

ABBREVIATIONS

#	NUMBER
@	AT
'	FEET
"	INCH
AASHTO	AMERICAN ASSOCIATION OF STATE HIGHWAY AND TRANSPORTATION OFFICIALS
ACI	AMERICAN CONCRETE INSTITUTE
AISC	AMERICAN INSTITUTE OF STEEL CONSTRUCTION
ANSI	AMERICAN NATIONAL STANDARDS INSTITUTE
APPROX	APPROXIMATE, APPROXIMATELY
ASCE	AMERICAN SOCIETY OF CIVIL ENGINEERS
ASTM	AMERICAN SOCIETY FOR TESTING AND MATERIALS
AWS	AMERICAN WELDING SOCIETY
AWWA	AMERICAN WATER WORKS ASSOCIATION
BF	BOTTOM FACE
BGS	BELOW GROUND SURFACE
BIGD	BELOW INLET GRATE DEVICE
BMP	BEST MANAGEMENT PRACTICES
BOT	BOTTOM
C	CONCRETE
C/L	CENTERLINE
CB	CATCH BASIN
C-C	CENTER TO CENTER
CDF	CONTROLLED DENSITY FILL
CFR	CODE OF FEDERAL REGULATIONS
CL	CENTERLINE
CLR	CLEAR
CO.	COUNTY
DEPT	DEPARTMENT
DI	DUCTILE IRON
DIP	DUCTILE IRON PIPE
DTL	DETAIL
DWG	DRAWING
E	EAST
E.G.	EXAMPLE
EA	EACH
EL	ELEVATION
ESC	EROSION AND SEDIMENT CONTROL
ETC	ET CETERA
FL	FLOW LINE, FLANGE
FLR	FLOOR
FT	FEET
G	GENERAL
GND	GROUND
GRC	GALVANIZED RIGID CONDUIT
H	HEIGHT
HDPE	HIGH DENSITY POLYETHYLENE
HP	HORSEPOWER
HYD	HYDRANT
IBC	INTERNATIONAL BUILDING CODE
ICC	INTERNATIONAL CODE COUNCIL
ID	INSIDE DIAMETER, INSIDE DIMENSIONS
IE	INVERT ELEVATION
IEEE	INSTITUTE OF ELECTRICAL AND ELECTRONICS ENGINEERS
IN	INCH
INV	INVERT
KAIC	THOUSAND AMPERES INTERRUPTING CURRENT
KC	KING COUNTY
KCMIL	THOUSAND CIRCULER MILS
KV	KILOVOLT
LB	POUND
LTST	LONG-TERM STORMWATER TREATMENT
MAX	MAXIMUM
MH	MANHOLE
MIN	MINIMUM
MJ	MECHANICAL JOINT
MPH	MILES PER HOUR
N	NORTH
NBF	NORTH BOEING FIELD
NE	NORTHEAST
NEC	NATIONAL ELECTRIC CODE
NEMA	NATIONAL ELECTRICAL MANUFACTURER'S ASSOCIATION
NGVD	NATIONAL GEODETIC VERTICAL DATUM
NO.	NUMBER
NTS, N.T.S	NOT TO SCALE
NW	NORTHWEST
O/W	OIL/WATER
OC	ON CENTER
OCT.	OCTOBER
OD	OUTSIDE DIAMETER
OSHA	OCCUPATIONAL SAFETY AND HEALTH ADMINISTRATION
OWS	OIL/WATER SEPARATOR
ϕ, DIA	DIAMETER
P	PIPE
PAV	PAVEMENT
PNL	PANEL
PSF	POUNDS PER SQUARE FOOT
PVC	POLYVINYL CHLORIDE
PWR	POWER
R.C.P.E.S	REINFORCED CONCRETE PIPE EXISTING SYSTEM
RCP	REINFORCED CONCRETE PIPE
REQ'D	REQUIRED
REV	REVISION/REVISED
RGS	RIGID GALVANIZED STEEL
RSC	RIGID STEEL CONDUIT
S	SOUTH, SLOPE
S.S	STAINLESS STEEL
SAN	SANITARY SEWER
SCL	SEATTLE CITY LIGHT
SDMH	STORM DRAIN MANHOLE
SDR	STANDARD DIMENSION RATIO
SE	SOUTHEAST
SQ	SQUARE
SSMH	STORM SEWER MANHOLE
SSTL	STAINLESS STEEL
STA	STATION
STE	SUITE
STS	STORM SEWER
SUB	SUBSTATION
SW	SOUTHWEST
SYM	SYMBOL
TESC	TEMPORARY EROSION AND SEDIMENT CONTROL
TF	TOP FACE
THHN	HEAT RESISTANT THERMOPLASTIC
THW	MOISTURE AND HEAT-RESISTANT THERMOPLASTIC
TYP	TYPICAL
UG	UNDERGROUND
UL	UNDERWRITERS LABORATORIES
U.N.O.	UNLESS NOTED OTHERWISE
V	VOLT
VAR	VARIABLE
VFD	VARIABLE FREQUENCY DRIVE
W	WEST
W/	WITH
WA	WASHINGTON
WAC	WASHINGTON ADMINISTRATIVE CODE
WISHA	WASHINGTON INDUSTRIAL SAFETY AND HEALTH ACT
WSDOT	WASHINGTON STATE DEPARTMENT OF TRANSPORTATION
XFMR	TRANSFORMER
XHHW	MOISTURE HEAT RESISTANT THERMOSET
YD	YARD

ABBREVIATIONS:
THROUGHOUT THE PLANS ARE ABBREVIATIONS WHICH ARE IN COMMON USE. THE LIST OF ABBREVIATIONS PROVIDED IS NOT INTENDED TO BE COMPLETE OR REPRESENTATIVE OF CONDITIONS OR MATERIALS ACTUALLY USED ON THE PROJECT. THE TECHNICAL REPRESENTATIVE WILL DEFINE THE INTENT OF ANY ABBREVIATION IN QUESTION.

LEGEND

EXISTING

- MATCHLINE
- EXISTING EDGE OF PAVEMENT
- EXISTING FENCE
- EXISTING STORM SEWER
- EXISTING SANITARY SEWER
- EXISTING FIRE SUPPLY
- EXISTING PROCESS WATER
- EXISTING COLD WATER
- EXISTING AIR SUPPLY
- EXISTING GAS
- EXISTING POWER
- EXISTING UTILITY STRIPING
- EXISTING FUEL OIL
- EXISTING LIGHTS
- EXISTING CATCH BASIN
- EXISTING MANHOLE
- EXISTING WATER VALVE
- EXISTING FIRE HYDRANT
- EXISTING BOLLARD
- STORM SEWER
- FORCEMAIN
- FORCEMAIN (SPARE LINE)
- ABANDONED AND FILLED AND PLUGGED STORMWATER PIPE
- MANHOLE
- CLEAN OUT

GENERAL NOTES

1. LOCATIONS OF EXISTING UTILITIES AS SHOWN ON THE CONSTRUCTION DRAWINGS ARE BASED ON DRAWINGS PROVIDED BY THE OWNER.
2. SURVEY DATUM FOR THESE DRAWINGS IS NAD83-91 (HORIZONTAL) AND NGVD 29 (VERTICAL).

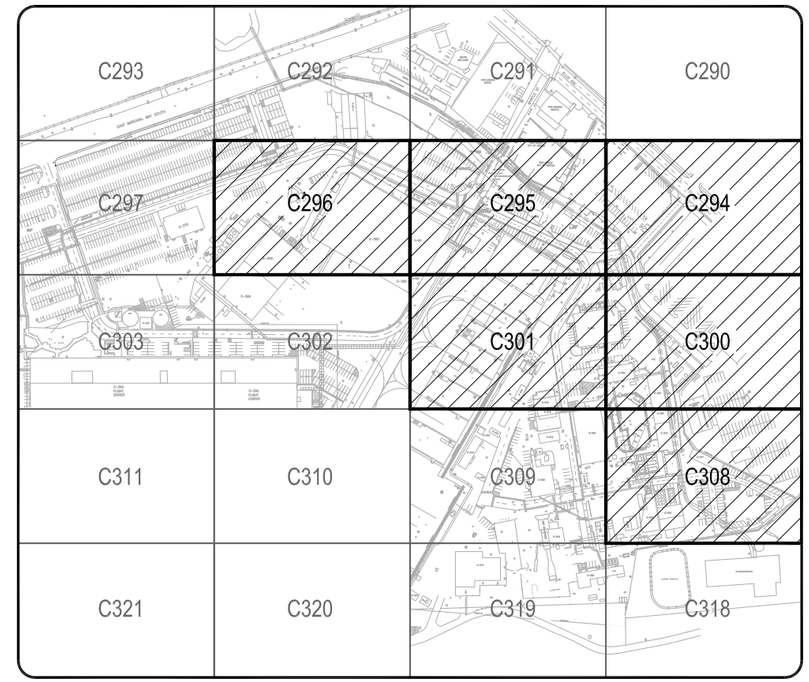

KEY PLAN
SCALE: NTS

URS
1501 4TH AVENUE, STE. 1400
SEATTLE, WA 98101-1616
TELEPHONE (206) 438-2700

SYM	REVISION	BY	APPROVED	DATE	SYM	REVISION	BY	APPROVED	DATE
A	PHASE 2 RE-ROUTE STORMWATER LINES – 60% DESIGN	URS	CASTRO	04.29.11					
B	PHASE 2 RE-ROUTE STORMWATER LINES – 90% DESIGN	URS	CASTRO	05.27.11					
C	PHASE 2 RE-ROUTE STORMWATER LINES – 100% DESIGN	URS	CASTRO	06.24.11					
D	PHASE 2 RE-ROUTE STORMWATER LINES – RECORD DRAWINGS	URS	CASTRO	02.27.12					

BOEING®

ACCEPTABILITY
THIS DESIGN AND/OR SPECIFICATION IS APPROVED

APPROVED BY	DEPT.	DATE

DRAWN STICKEL	DATE 06.24.11	
CHECKED		
ENGINEER CASTRO	06.24.11	
CHECKED		
APPROVED		
APPROVED		

SUBTITLE: KEY SHEET

TITLE: PHASE 2 RE-ROUTE STORMWATER LINES
NORTH BOEING FIELD

COL. NBF

CURRENT REVISION	SYMBOL D	DATE 06.24.11
SHEET C1		
JOB NO.		COMP NO.
DWG NO. 3.YD-C1		

C:\gen\Boeing\NBFPEL Remediation\Phase 2 Re-Route Storm Lines\R04 (EPA Asbuilt)\Civil\3-YD\C1 - Key Sheet.dwg
Mod: 02/22/2012, 11:29 | Plotted: 02/23/2012, 08:33 | Chad_Stickel

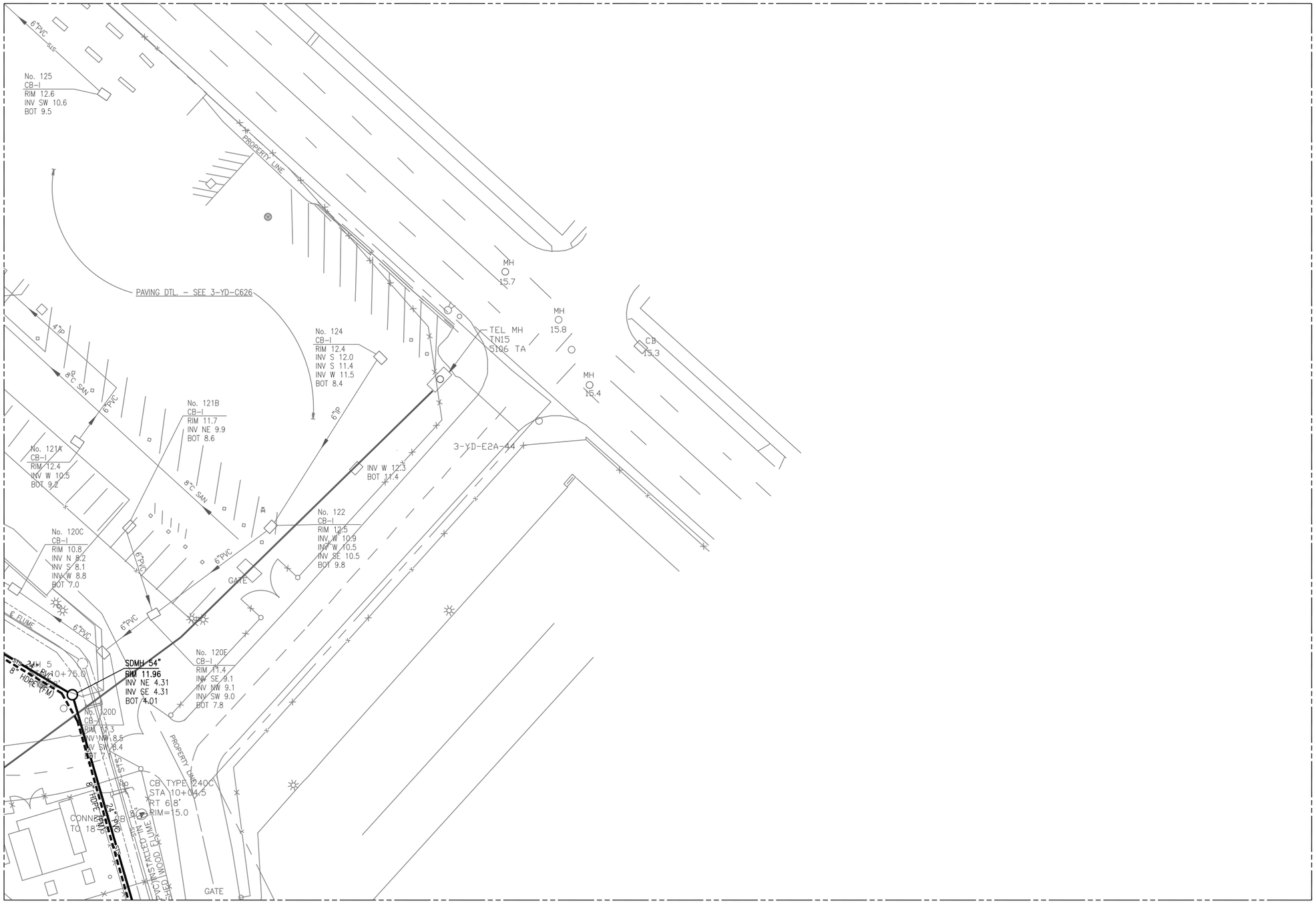

MATCHLINE - FOR CONTINUATION SEE SHEET C295

LEGEND:

- STS — STORM SEWER
- FORCEMAIN
- MANHOLE

GENERAL NOTES:

1. STORMWATER LINE IS 24-INCH PVC PIPE.

20' 10' 0 20' 40'

SCALE IN FEET

																C293	C292	C291	C290
														C299	C298	C297	C296	C295	C294
												C307	C306	C305	C304	C303	C302	C301	C300
C333	C332						C317	C316	C315	C314	C313	C312	C311	C310	C309	C308			
C331	C330	C329	C328	C327	C326	C325	C324	C323	C322	C321	C320	C319	C318						

KEY PLAN
SCALE = NONE

URS
1501 4TH AVENUE, STE. 1400
SEATTLE, WA 98101-1616
TELEPHONE (206) 438-2700

SYM	REVISION	BY	APPROVED	DATE	SYM	REVISION	BY	APPROVED	DATE
A	PHASE 2 RE-ROUTE STORMWATER LINES - 60% DESIGN	URS	CASTRO	04.29.11					
B	PHASE 2 RE-ROUTE STORMWATER LINES - 90% DESIGN	URS	CASTRO	05.27.11					
C	PHASE 2 RE-ROUTE STORMWATER LINES - 100% DESIGN	URS	CASTRO	06.24.11					
D	PHASE 2 RE-ROUTE STORMWATER LINES - RECORD DRAWINGS	URS	CASTRO	02.27.12					

BOEING

ACCEPTABILITY
THIS DESIGN AND/OR SPECIFICATION IS APPROVED

APPROVED BY	DEPT.	DATE

DRAWN STICKEL	DATE 06.24.11	
CHECKED		
ENGINEER CASTRO	06.24.11	
CHECKED		
APPROVED		
APPROVED		

SUBTITLE: STORM AND SANITARY SEWER

TITLE: PHASE 2 RE-ROUTE STORMWATER LINES
NORTH BOEING FIELD

CIVIL MASTER COL. NBF

CURRENT REVISION	SYMBOL	DATE
	D	06.24.11

SHEET: C294

JOB NO.

COMP NO.

DWG NO. 3.YD-C294

O:\gis\Boeing\NBFPEL Remediation\Phase 2 Re-Route Storm Lines\R04 (EPA Actual)\Cid13-YD-C294 - Storm Align Plan.dwg | Mod: 02/22/2012, 11:29 | Plotted: 02/23/2012, 08:33 | Cred_Stickel

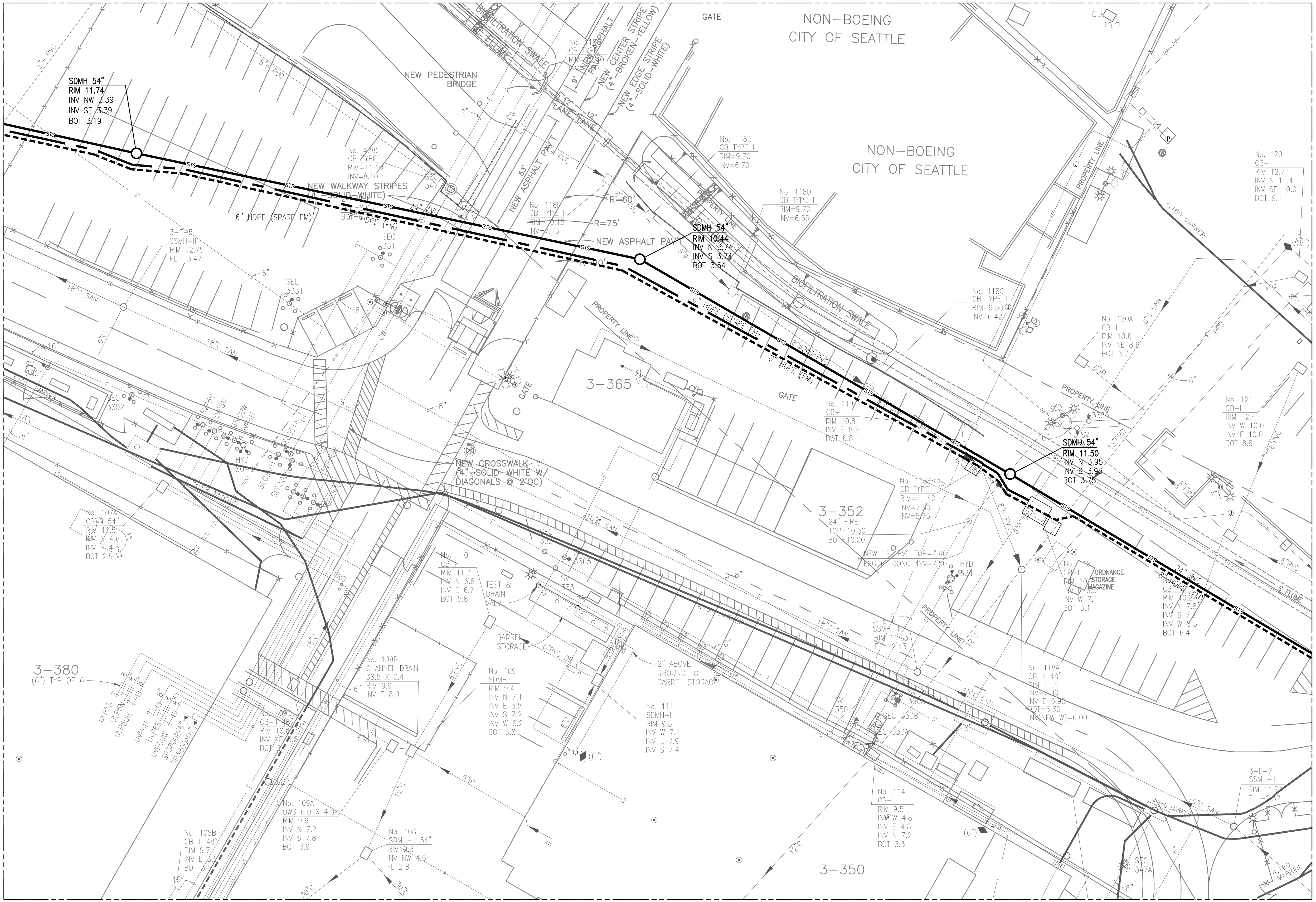

LEGEND:

- STS — STORM SEWER
- FORCEMAIN
- FORCEMAIN (SPARE LINE)
- MANHOLE

GENERAL NOTES:

1. STORMWATER LINE IS 24-INCH PVC PIPE.
2. STORMWATER FORCEMAIN IS 8-INCH HDPE.

SCALE IN FEET: 20' 10' 0 20' 40'

KEY PLAN (SCALE : NONE)

										C293	C292	C291	C290
								C299	C298	C297	C296	C295	C294
							C307	C306	C305	C304	C303	C302	C301	C300
C333	C332			C317	C316	C315	C314	C313	C312	C311	C310	C309	C308
C331	C330	C329	C328	C327	C326	C325	C324	C323	C322	C321	C320	C319	C318

URS
1501 4TH AVENUE, STE. 1400
SEATTLE, WA 98101-1616
TELEPHONE (206) 438-2700

SYM	REVISION	BY	APPROVED	DATE	SYM	REVISION	BY	APPROVED	DATE
A	PHASE 2 RE-ROUTE STORMWATER LINES – 60% DESIGN	URS	CASTRO	04.29.11					
B	PHASE 2 RE-ROUTE STORMWATER LINES – 90% DESIGN	URS	CASTRO	05.27.11					
C	PHASE 2 RE-ROUTE STORMWATER LINES – 100% DESIGN	URS	CASTRO	06.24.11					
D	PHASE 2 RE-ROUTE STORMWATER LINES – RECORD DRAWINGS	URS	CASTRO	02.27.12					

BOEING®

ACCEPTABILITY
THIS DESIGN AND/OR SPECIFICATION IS APPROVED

APPROVED BY	DEPT.	DATE

DRAWN: STICKEL — DATE 06.24.11
CHECKED
ENGINEER: CASTRO — 06.24.11
CHECKED
APPROVED
APPROVED

SUBTITLE: STORM AND SANITARY SEWER

TITLE: PHASE 2 RE-ROUTE STORMWATER LINES
NORTH BOEING FIELD

CIVIL MASTER COL. NBF

CURRENT REVISION — SYMBOL: D — DATE: 06.24.11

SHEET: C295

JOB NO.
COMP NO.
DWG NO. 3.YD-C295

Q:\geo\Boeing\NBF\PEL Remediation\Phase 2 Re-Route Storm Lines\R04 (EPA Asbuilt)\Civil\3-YD-C295 - Storm Align Plan.dwg
Mod: 02/22/2012, 11:28 | Plotted: 02/23/2012, 08:33 | Chad_Stickel

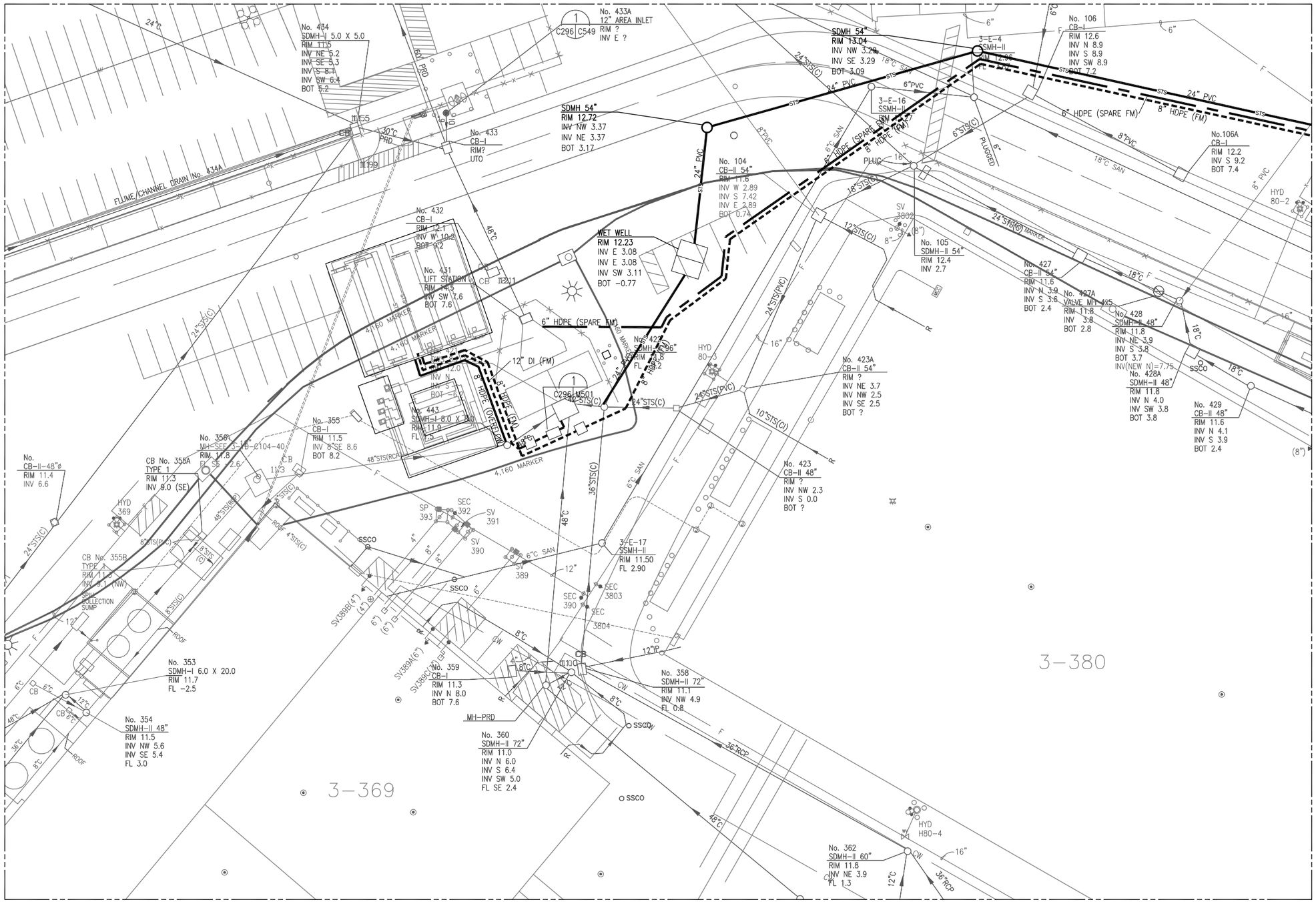

LEGEND:

- STS — STORM SEWER
- FORCEMAIN
- FORCEMAIN (SPARE LINE)
- MANHOLE

GENERAL NOTES:

1. STORMWATER LINE IS 24-INCH PVC PIPE.
2. STORMWATER FORCEMAIN SHOWN IS 8-INCH HDPE.

20' 10' 0 20' 40'
SCALE IN FEET

										C293	C292	C291	C290	
								C299	C298	C297	C296	C295	C294	
						C307	C306	C305	C304	C303	C302	C301	C300	
C332			C317	C316	C315	C314	C313	C312	C311	C310	C309	C308		
C330	C329	C328	C327	C326	C325	C324	C323	C322	C321	C320	C319	C318		

KEY PLAN
SCALE : NONE

URS
1501 4TH AVENUE, STE. 1400
SEATTLE, WA 98101-1616
TELEPHONE (206) 438-2700

SYM	REVISION	BY	APPROVED	DATE	SYM	REVISION	BY	APPROVED	DATE
A	PHASE 2 RE-ROUTE STORMWATER LINES – 60% DESIGN	URS	CASTRO	04.29.11					
B	PHASE 2 RE-ROUTE STORMWATER LINES – 90% DESIGN	URS	CASTRO	05.27.11					
C	PHASE 2 RE-ROUTE STORMWATER LINES – 100% DESIGN	URS	CASTRO	06.24.11					
D	PHASE 2 RE-ROUTE STORMWATER LINES – RECORD DRAWINGS	URS	CASTRO	02.27.12					

BOEING

ACCEPTABILITY
THIS DESIGN AND/OR SPECIFICATION IS APPROVED

APPROVED BY	DEPT.	DATE

DRAWN STICKEL	DATE 06.24.11	
CHECKED		
ENGINEER CASTRO	06.24.11	
CHECKED		
APPROVED		
APPROVED		

SUBTITLE: STORM AND SANITARY SEWER

TITLE: PHASE 2 RE-ROUTE STORMWATER LINES
NORTH BOEING FIELD

CIVIL MASTER COL. NBF

CURRENT REVISION	SYMBOL	DATE
	D	06.24.11

SHEET: C296

JOB NO.

COMP NO.

DWG NO. 3.YD-C296

C:\pw\Boeing\NBFPEL Remediation\Phase 2 Re-Route Storm Lines\R04 (EPA Adult)\Civil\3-YD-C296 - Storm Align Plan.dwg
Mod: 02/22/2012, 11:28 | Plotted: 02/23/2012, 08:34 | Chad_Stickel

MATCHLINE – FOR CONTINUATION SEE SHEET C294

MATCHLINE – FOR CONTINUATION SEE SHEET C308

LEGEND:

- STS — STORM SEWER
- FORCEMAIN
- MANHOLE
- CLEAN OUT

GENERAL NOTES:

1. STORMWATER LINE IS 24-INCH PVC PIPE.

20' 10' 0 20' 40'

SCALE IN FEET

											C293	C292	C291	C290
									C299	C298	C297	C296	C295	C294
							C307	C306	C305	C304	C303	C302	C301	C300
C333	C332			C317	C316	C315	C314	C313	C312	C311	C310	C309	C308	
C331	C330	C329	C328	C327	C326	C325	C324	C323	C322	C321	C320	C319	C318	

KEY PLAN
SCALE : NONE

URS
1501 4TH AVENUE, STE. 1400
SEATTLE, WA 98101-1616
TELEPHONE (206) 438-2700

SYM	REVISION	BY	APPROVED	DATE	SYM	REVISION	BY	APPROVED	DATE
A	PHASE 2 RE-ROUTE STORMWATER LINES – 60% DESIGN	URS	CASTRO	04.29.11					
B	PHASE 2 RE-ROUTE STORMWATER LINES – 90% DESIGN	URS	CASTRO	05.27.11					
C	PHASE 2 RE-ROUTE STORMWATER LINES – 100% DESIGN	URS	CASTRO	06.24.11					
D	PHASE 2 RE-ROUTE STORMWATER LINES – RECORD DRAWINGS	URS	CASTRO	02.27.12					

BOEING

ACCEPTABILITY
THIS DESIGN AND/OR SPECIFICATION IS APPROVED

APPROVED BY	DEPT.	DATE

		DATE
DRAWN	STICKEL	06.24.11
CHECKED		
ENGINEER	CASTRO	06.24.11
CHECKED		
APPROVED		
APPROVED		

SUBTITLE: STORM AND SANITARY SEWER

TITLE: PHASE 2 RE-ROUTE STORMWATER LINES
NORTH BOEING FIELD

CIVIL MASTER COL. NBF

CURRENT REVISION	SYMBOL	DATE
	D	06.24.11

SHEET: C300

JOB NO.

COMP NO.

DWG NO. 3.YD-C300

MATCHLINE – FOR CONTINUATION SEE SHEET C301

Mod: 02/23/2012, 10:28 | Plotted: 02/23/2012, 10:39 | Chad_Stickel

O:\jobs\Boeing\NBFEL Remediation\Phase 2 Re-Route Storm Lines\R04 (EPA Adsulf)\Civil\3-YD-C300 - Storm Align Plan.dwg

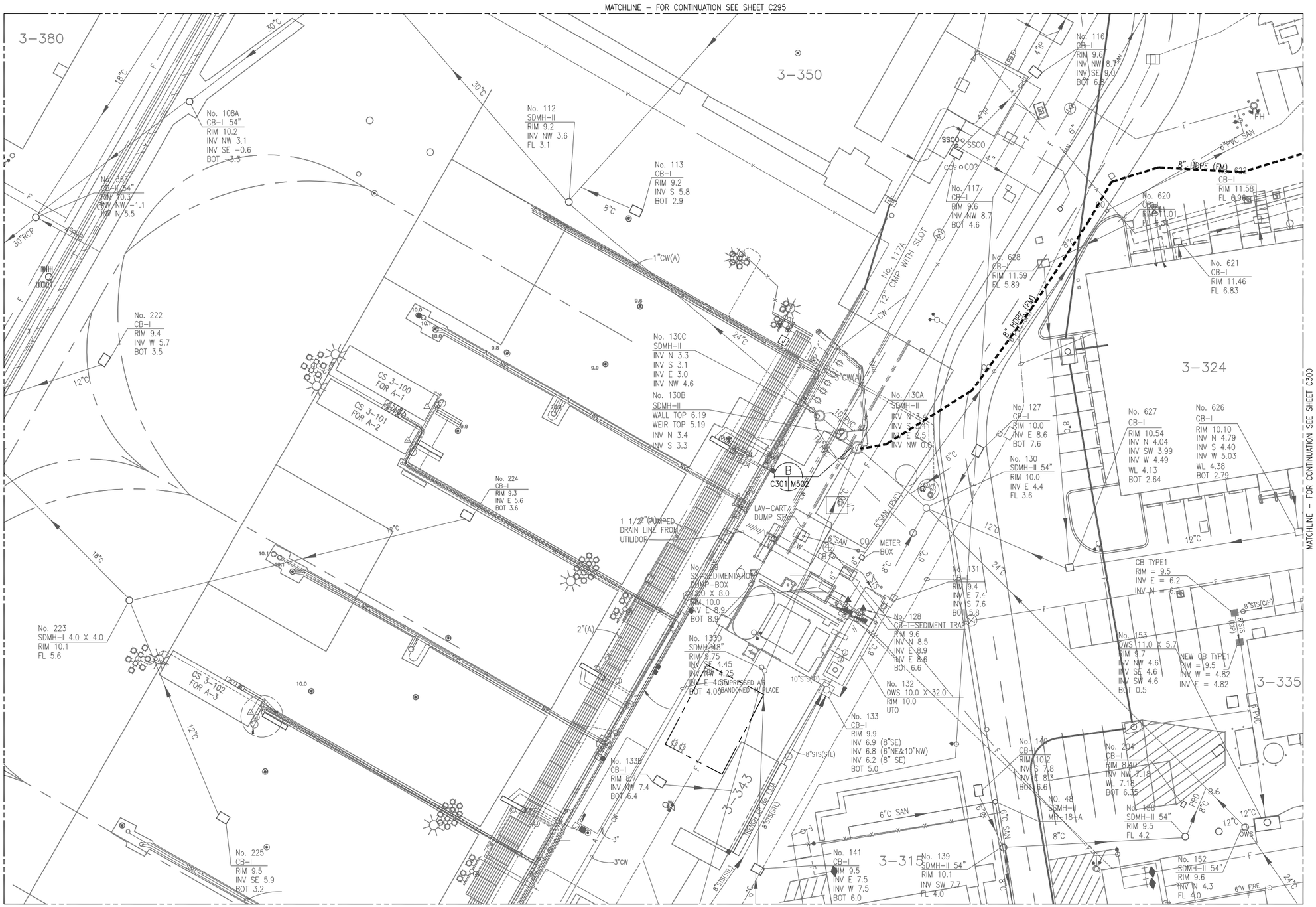

LEGEND:

- STS — STORM SEWER
- FORCEMAIN
- FORCEMAIN (SPARE LINE)
- MANHOLE

GENERAL NOTES:

1. STORMWATER FORCEMAIN IS 8–INCH HDPE.

20' 10' 0 20' 40'

SCALE IN FEET

																				C293	C292	C291	C290
																		C299	C298	C297	C296	C295	C294
																C307	C306	C305	C304	C303	C302	C301	C300
C333	C332								C317	C316	C315	C314	C313	C312	C311	C310	C309	C308					
C331	C330	C329		C328	C327	C326	C325	C324	C323	C322	C321	C320	C319	C318									

KEY PLAN

SCALE : NONE

N

URS 1501 4TH AVENUE, STE. 1400
SEATTLE, WA 98101-1616
TELEPHONE (206) 438-2700

SYM	REVISION	BY	APPROVED	DATE	SYM	REVISION	BY	APPROVED	DATE
A	PHASE 2 RE–ROUTE STORMWATER LINES – 60% DESIGN	URS	CASTRO	04.29.11					
B	PHASE 2 RE–ROUTE STORMWATER LINES – 90% DESIGN	URS	CASTRO	05.27.11					
C	PHASE 2 RE–ROUTE STORMWATER LINES – 100% DESIGN	URS	CASTRO	06.24.11					
D	PHASE 2 RE–ROUTE STORMWATER LINES – RECORD DRAWINGS	URS	CASTRO	02.27.12					

BOEING

ACCEPTABILITY
THIS DESIGN AND/OR SPECIFICATION IS APPROVED

APPROVED BY	DEPT.	DATE

		DATE
DRAWN	STICKEL	06.24.11
CHECKED		
ENGINEER	CASTRO	06.24.11
CHECKED		
APPROVED		
APPROVED		

SUBTITLE: STORM AND SANITARY SEWER

TITLE: PHASE 2 RE–ROUTE STORMWATER LINES
NORTH BOEING FIELD

CIVIL MASTER COL. NBF

CURRENT REVISION	SYMBOL	DATE
	D	06.24.11

SHEET: C301

JOB NO.

COMP NO.

DWG NO. 3.YD–C301

Cygan\Boeing\NBFPEL Remediation\Phase 2 Re-Route Storm Lines\R04 (EPA Actuals)\Civil\3-YD-C301- Storm Align Plan.dwg Mon, 02/22/2012, 11:27 | Plotted: 02/23/2012, 08:34 | Chad_Stickel

MATCHLINE – FOR CONTINUATION SEE SHEET C300

LEGEND:

- STS — STORM SEWER
- ABANDONED AND FILLED AND PLUGGED STORMWATER PIPE
- MANHOLE
- CLEAN OUT

GENERAL NOTES:

1. STORMWATER LINE IS 24-INCH PVC PIPE.

20' 10' 0 20' 40'
SCALE IN FEET

												C293	C292	C291	C290
										C299	C298	C297	C296	C295	C294
								C307	C306	C305	C304	C303	C302	C301	C300
C333	C332				C317	C316	C315	C314	C313	C312	C311	C310	C309	C308	
C331	C330	C329		C328	C327	C326	C325	C324	C323	C322	C321	C320	C319	C318	

KEY PLAN
SCALE : NONE

URS
1501 4TH AVENUE, STE. 1400
SEATTLE, WA 98101-1616
TELEPHONE (206) 438-2700

SYM	REVISION	BY	APPROVED	DATE	SYM	REVISION	BY	APPROVED	DATE
A	PHASE 2 RE-ROUTE STORMWATER LINES – 60% DESIGN	URS	CASTRO	04.29.11					
B	PHASE 2 RE-ROUTE STORMWATER LINES – 90% DESIGN	URS	CASTRO	05.27.11					
C	PHASE 2 RE-ROUTE STORMWATER LINES – 100% DESIGN	URS	CASTRO	06.24.11					
D	PHASE 2 RE-ROUTE STORMWATER LINES – RECORD DRAWINGS	URS	CASTRO	02.27.12					

BOEING

ACCEPTABILITY
THIS DESIGN AND/OR SPECIFICATION IS APPROVED

APPROVED BY	DEPT.	DATE

DRAWN	STICKEL	06.24.11
CHECKED		
ENGINEER	CASTRO	06.24.11
CHECKED		
APPROVED		
APPROVED		

SUBTITLE: STORM AND SANITARY SEWER

TITLE: PHASE 2 RE-ROUTE STORMWATER LINES
NORTH BOEING FIELD

CIVIL MASTER COL. NBF

CURRENT REVISION	SYMBOL	DATE
	D	06.24.11

SHEET: C308

JOB NO.

COMP NO.

DWG NO. 3.YD-C308

Mod: 02/22/2012, 11:26 | Plotted: 02/23/2012, 08:34 | Chad_Sibbel
C:\jobs\Boeing\NBFEL Remediation\Phase 2 Re-Route Storm Lines\R04 (EPA Adsdl\)\Cfd\3-YD-C308 - Storm Align Plan.dwg

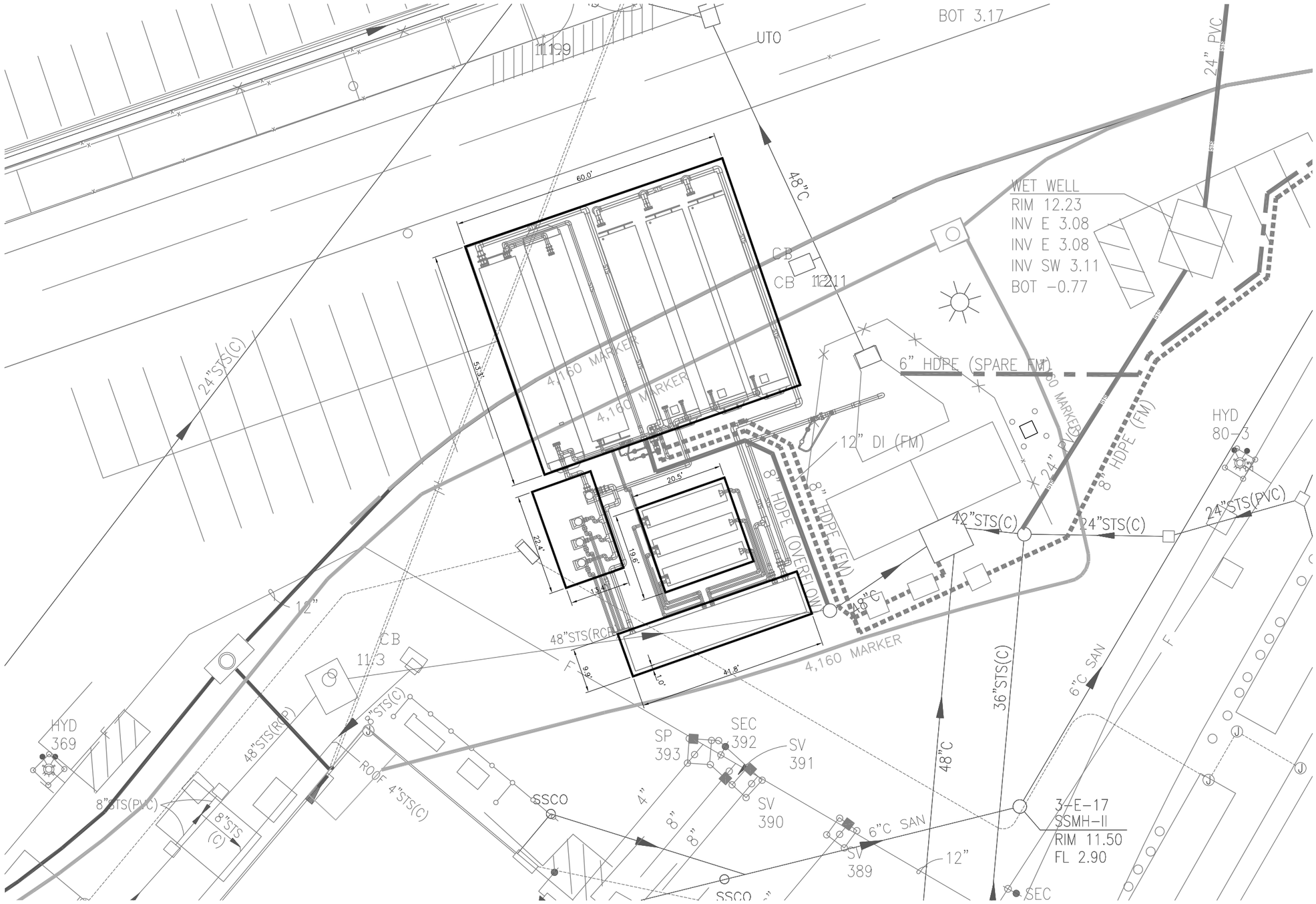

LEGEND:

CONCRETE PAD

CONSTRUCTION NOTES:

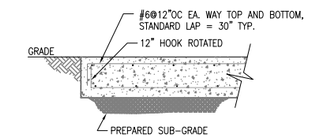

10' 5' 0 10' 20'

SCALE IN FEET

																		C293	C292	C291
															C299	C298	C297	C296	C295
												C307	C306	C305	C304	C303	C302	C301
C332					C317	C316	C315	C314	C313	C312	C311	C310	C309
C330	C329	C328	C327	C326	C325	C324	C323	C322	C321	C320	C319

KEY PLAN
SCALE : NONE

URS 1501 4TH AVENUE, STE. 1400
SEATTLE, WA 98101-1616
TELEPHONE (206) 438-2700

SYM	REVISION	BY	APPROVED	DATE	SYM	REVISION	BY	APPROVED	DATE
A	PHASE 2 RE-ROUTE STORMWATER LINES – 60% DESIGN	URS	FRANCO	04.29.11					
B	PHASE 2 RE-ROUTE STORMWATER LINES – 90% DESIGN	URS	FRANCO	05.27.11					
C	PHASE 2 RE-ROUTE STORMWATER LINES – 100% DESIGN	URS	FRANCO	06.24.11					
D	PHASE 2 RE-ROUTE STORMWATER LINES – RECORD DRAWINGS	URS	FRANCO	02.27.12					

BOEING

ACCEPTABILITY
THIS DESIGN AND/OR SPECIFICATION IS APPROVED

APPROVED BY	DEPT.	DATE

DRAWN MUENCH		DATE 06.24.11
CHECKED		
ENGINEER FRANCO		06.24.11
CHECKED		
APPROVED		
APPROVED		

SUBTITLE: ENLARGED PAVING PLAN

TITLE: PHASE 2 RE-ROUTE STORMWATER LINES
NORTH BOEING FIELD

CIVIL MASTER COL. NBF

CURRENT REVISION: SYMBOL D DATE 06.24.11

SHEET: C450

JOB NO.

COMP NO.

DWG NO. 3.YD-C450

O:\jobs\Boeing\NBFIEL Remediation\Phase 2 Re-Route Storm Lines\R04 (EPA Adduit)\Civil\3-YD-C450 - Enlarged Paving Plan.dwg Mod: 02/22/2012, 11:26 | Plotted: 02/23/2012, 08:34 | Chad_Stickel

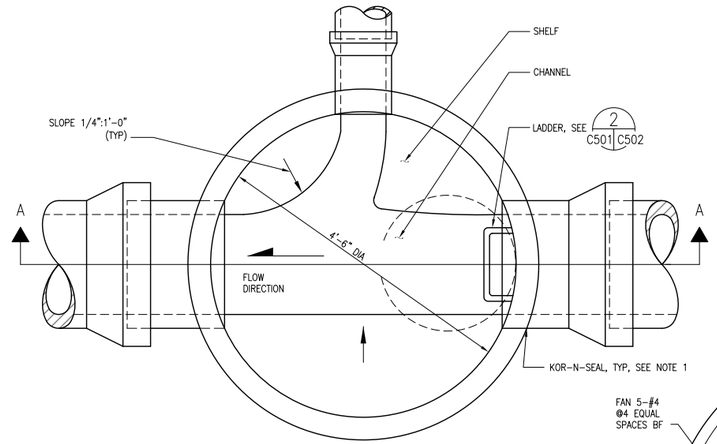

PLAN VIEW

"H"	REINFORCING STEEL "A" MIN SQ IN/FT, TOP FACE, IN EACH DIRECTION	
	PRECAST BASE	CAST-IN-PLACE BASE
20' MAX	0.29	0.21
30' MAX	0.36	0.26
40' MAX	0.42	0.31

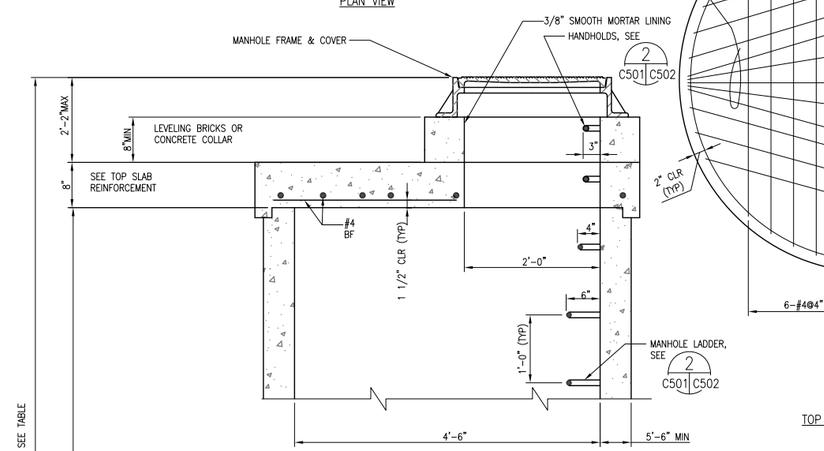

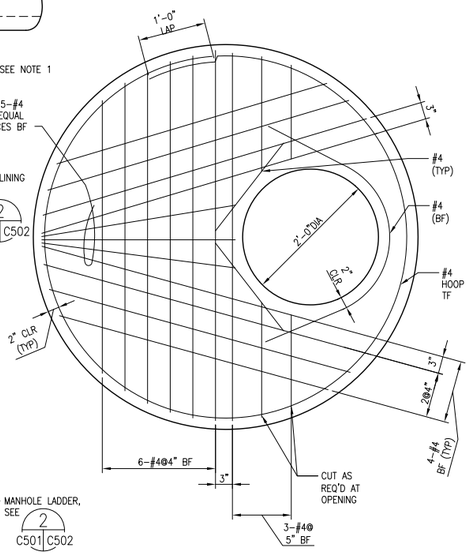

TOP SLAB REINFORCEMENT

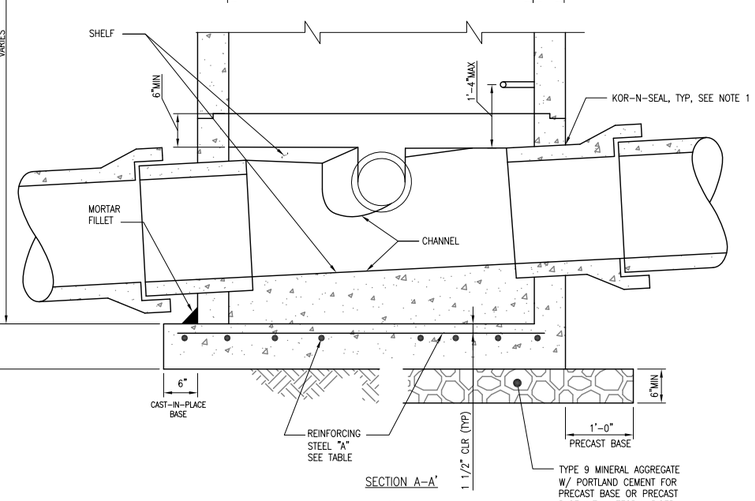

SECTION A-A'

NOTES:
1. KOR-N-SEAL MANHOLE-TO-PIPE CONNECTOR, 506 SERIES.

SOURCE:
CITY OF SEATTLE STANDARD PLAN NO. 204.5b (2011)

TYPICAL 54" MANHOLE

SCALE: N.T.S.

1 VAR C501

URS 1501 4TH AVENUE, STE. 1400
SEATTLE, WA 98101-1616
TELEPHONE (206) 438-2700

SYM	REVISION	BY	APPROVED	DATE	SYM	REVISION	BY	APPROVED	DATE
A	PHASE 2 RE-ROUTE STORMWATER LINES – 60% DESIGN	URS	CASTRO	04.29.11					
B	PHASE 2 RE-ROUTE STORMWATER LINES – 90% DESIGN	URS	CASTRO	05.27.11					
C	PHASE 2 RE-ROUTE STORMWATER LINES – 100% DESIGN	URS	CASTRO	06.24.11					
D	PHASE 2 RE-ROUTE STORMWATER LINES – RECORD DRAWINGS	URS	CASTRO	02.27.12					

BOEING

ACCEPTABILITY
THIS DESIGN AND/OR SPECIFICATION IS APPROVED

APPROVED BY	DEPT.	DATE

DRAWN STICKEL	DATE 06.24.11	
CHECKED		
ENGINEER CASTRO	06.24.11	
CHECKED		
APPROVED		
APPROVED		

SUBTITLE: SECTION AND DETAILS

TITLE: PHASE 2 RE-ROUTE STORMWATER LINES
NORTH BOEING FIELD

CIVIL MASTER COL. NBF

CURRENT REVISION	SYMBOL	DATE
	D	06.24.11

SHEET C501

JOB NO.

COMP NO.

DWG NO. 3.YD-C501

C:\cgn\Boeing\NBFPEL Remediation\Phase 2 Re-Route Storm Lines\R04 (EPA Adult)\CIvil\3-YD-C501 - Manhole Details.dwg Mod: 02/22/2012, 11:25 | Plotted: 02/23/2012, 08:24 | Chad_Stickel

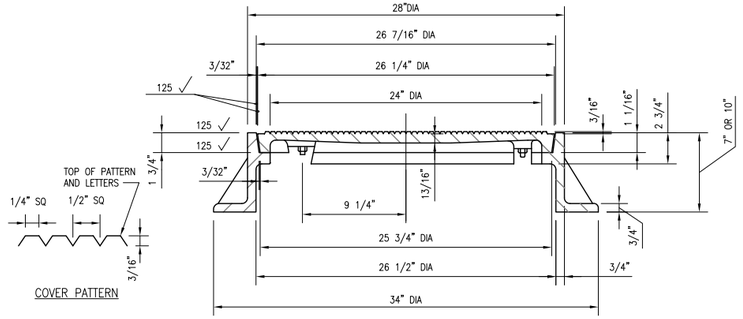

NOTES:
1. "DRAIN" IS 3" RAISED LETTERS.
2. COVER THICKNESS IS MEASURED FROM THE BOTTOM OF THE PATTERN.
3. FRAMES ARE MANUFACTURED FROM CAST IRON OR DUCTILE IRON.
4. COVERS ARE MANUFACTURED FROM DUCTILE IRON.

SOURCE:
CITY OF SEATTLE STANDARD PLAN NO. 230 (2011)

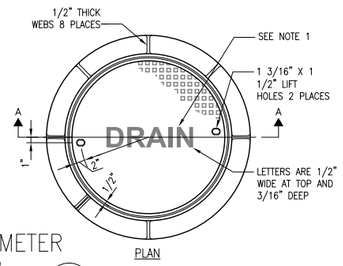

TYPICAL 2'–0" DIAMETER FRAME AND COVER (1)

SCALE: N.T.S.

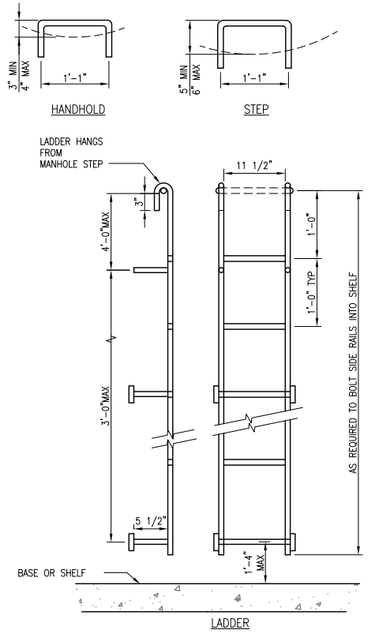

NOTES:
1. MATERIAL – POLYPROPYLENE
2. STEPS AND HANDHOLDS INSTALLED AT 1'–0" SPACING.

SOURCE:
CITY OF SEATTLE STANDARD PLAN NO. 232 (2011)

TYPICAL MANHOLE LADDER, STEP AND HANDHOLD (2)

SCALE: N.T.S.

TABLE 1

TYPE	ID	WIDTH	BEDDING
HDPE FORCEMAIN	6"	40"	MINERAL AGGREGATE TYPE 22
HDPE FORCEMAIN	7.5"	40"	MINERAL AGGREGATE TYPE 22
DIP FORCEMAIN	12"	40"	MINERAL AGGREGATE TYPE 9
HDPE (OR PVC) GRAVITY LINE	24.5"	55"	MINERAL AGGREGATE TYPE 22

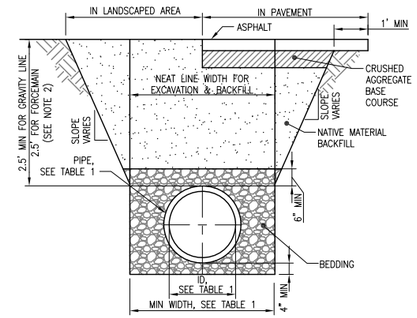

TYPICAL SECTION – GRAVITY LINE OR FORCEMAIN (3)

SCALE: N.T.S.

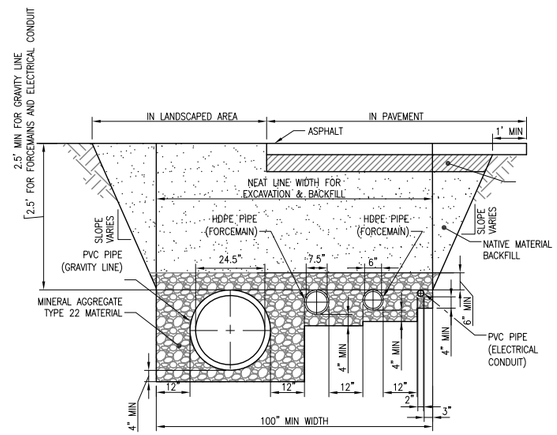

TYPICAL SECTION – GRAVITY LINE, FORCEMAINS AND ELECTRICAL CONDUIT (4)

SCALE: N.T.S.

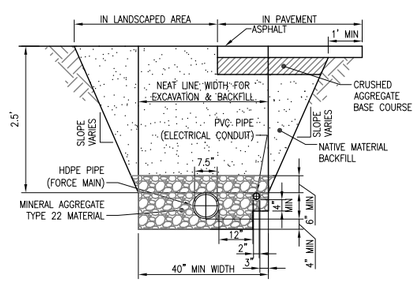

TYPICAL SECTION – FORCEMAIN AND ELECTRICAL CONDUIT (7)

SCALE: N.T.S.

URS
1501 4TH AVENUE, STE. 1400
SEATTLE, WA 98101-1616
TELEPHONE (206) 438-2700

SYM	REVISION	BY	APPROVED	DATE
A	PHASE 2 RE–ROUTE STORMWATER LINES – 60% DESIGN	URS	CASTRO	04.29.11
B	PHASE 2 RE–ROUTE STORMWATER LINES – 90% DESIGN	URS	CASTRO	05.27.11
C	PHASE 2 RE–ROUTE STORMWATER LINES – 100% DESIGN	URS	CASTRO	06.24.11
D	PHASE 2 RE–ROUTE STORMWATER LINES – RECORD DRAWINGS	URS	CASTRO	02.27.12

BOEING

ACCEPTABILITY
THIS DESIGN AND/OR SPECIFICATION IS APPROVED

APPROVED BY	DEPT.	DATE

		DATE
DRAWN	STICKEL	06.24.11
CHECKED		
ENGINEER	CASTRO	06.24.11
CHECKED		
APPROVED		
APPROVED		

SUBTITLE: SECTIONS AND DETAILS

TITLE: PHASE 2 RE–ROUTE STORMWATER LINES
NORTH BOEING FIELD

CIVIL MASTER COL. NBF

CURRENT REVISION: D — DATE: 06.24.11
SHEET: C502
JOB NO.
COMP NO.
DWG NO. 3.YD–C301

O:\proj\Boeing\NBFIEL Remediation\Phase 2 Re-Route Storm Lines\R04 (EPA Addendum)\Dwgs\3-YD-C502 - Trench Details.dwg Mod: 02/22/2012, 11:24 | Plotted: 02/22/2012, 08:34 | Chad_Stickel

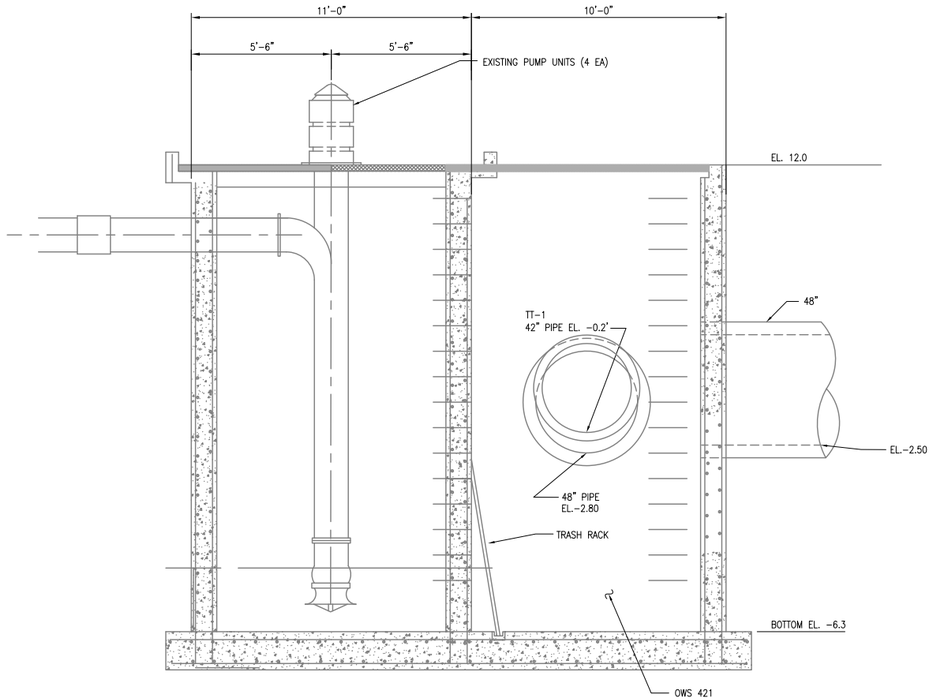

EXISTING KING COUNTY LIFT STATION 431 SECTION (A / M500)

SCALE: 3/8"=1'-0"

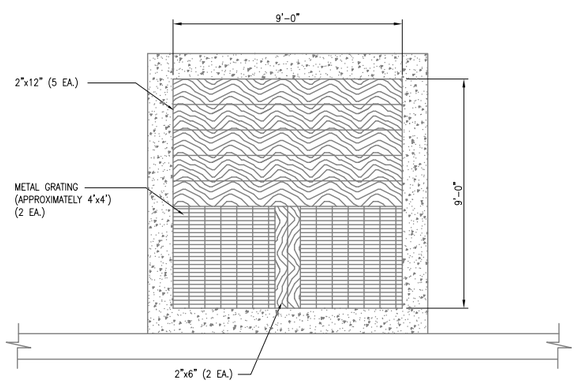

EXISTING COVER FOR OWS 421 (1 / M500)

SCALE: 3/8"=1'-0"

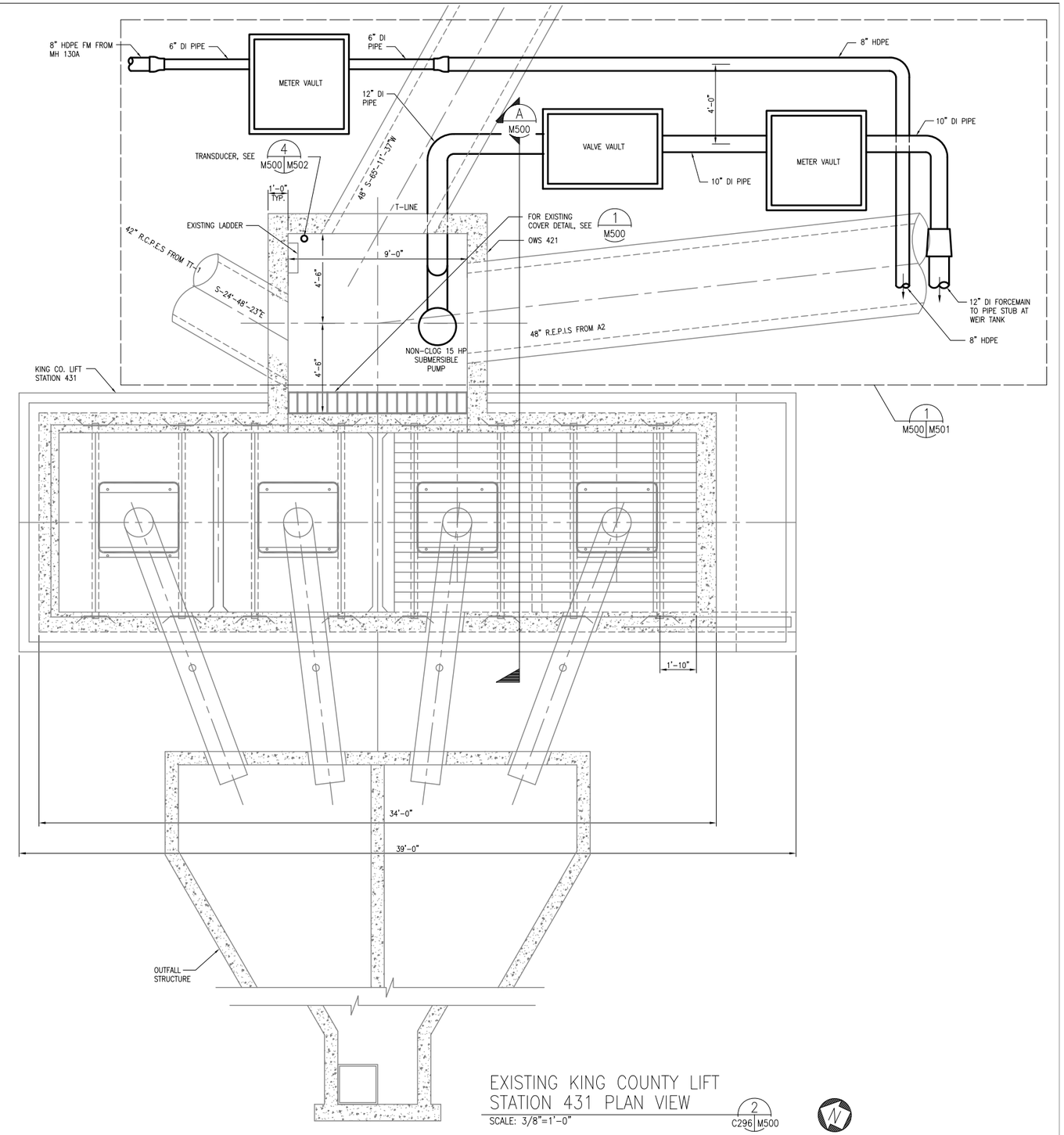

EXISTING KING COUNTY LIFT STATION 431 PLAN VIEW (2 / C296 M500)

SCALE: 3/8"=1'-0"

URS 1501 4TH AVENUE, STE. 1400
SEATTLE, WA 98101-1616
TELEPHONE (206) 438-2700

SYM	REVISION	BY	APPROVED	DATE	SYM	REVISION	BY	APPROVED	DATE
A	PHASE 2 RE-ROUTE STORMWATER LINES – 60% DESIGN	URS	GILLESPIE	04.29.11					
B	PHASE 2 RE-ROUTE STORMWATER LINES – 90% DESIGN	URS	GILLESPIE	05.27.11					
C	PHASE 2 RE-ROUTE STORMWATER LINES – 100% DESIGN	URS	GILLESPIE	06.24.11					
D	PHASE 2 RE-ROUTE STORMWATER LINES – RECORD DRAWINGS	URS	GILLESPIE	02.27.12					

BOEING

ACCEPTABILITY
THIS DESIGN AND/OR SPECIFICATION IS APPROVED

APPROVED BY	DEPT.	DATE

DRAWN JILES	DATE 06.24.11	
CHECKED		
ENGINEER GILLESPIE	06.24.11	
CHECKED		
APPROVED		
APPROVED		

SUBTITLE: SECTIONS AND DETAILS

TITLE: PHASE 2 RE-ROUTE STORMWATER LINES
NORTH BOEING FIELD

MECHANICAL MASTER COL. NBF

CURRENT REVISION: D — DATE: 06.24.11

SHEET: M500

JOB NO. 972108-00 — COMP NO.

DWG NO. 3.YD-M500

O:\geo\Books\NBFIELD\Remediation\Phase 2 Re-Route Storm Lines\R04 (EPA Addult)\Mech\3-YD-M500 - Pump House Sections and Details.dwg Mod: 02/22/2012, 11:34 | Plotted: 02/23/2012, 08:34 | Chad_Sikkel

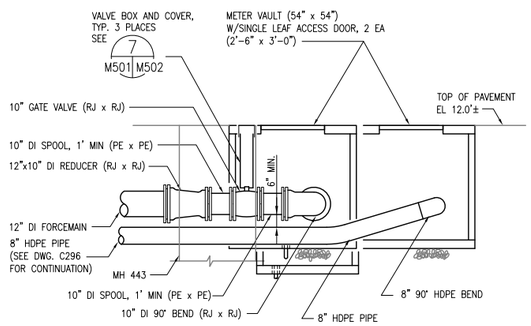

ELEVATION
SCALE: 3/8"=1'-0"
4 M501

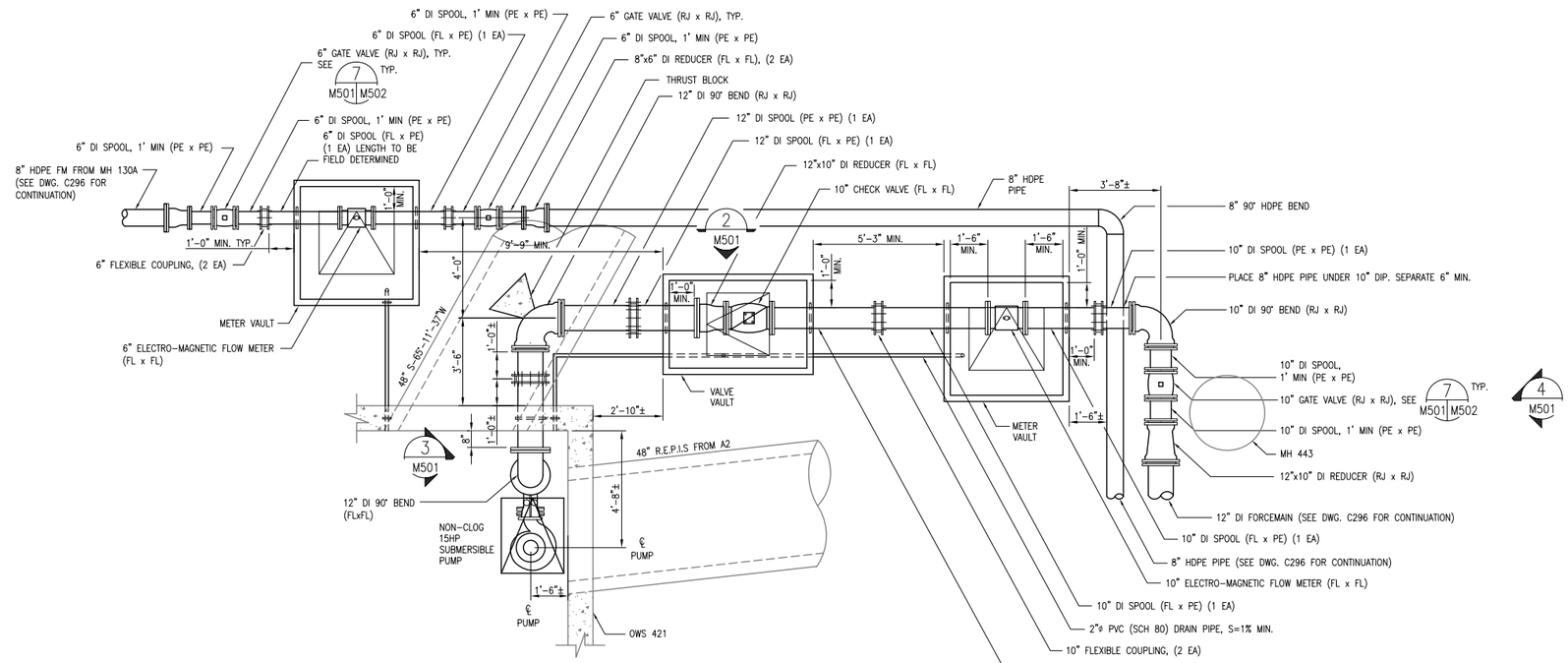

PLAN DETAIL
SCALE: 3/8"=1'-0"
1 M500 M501

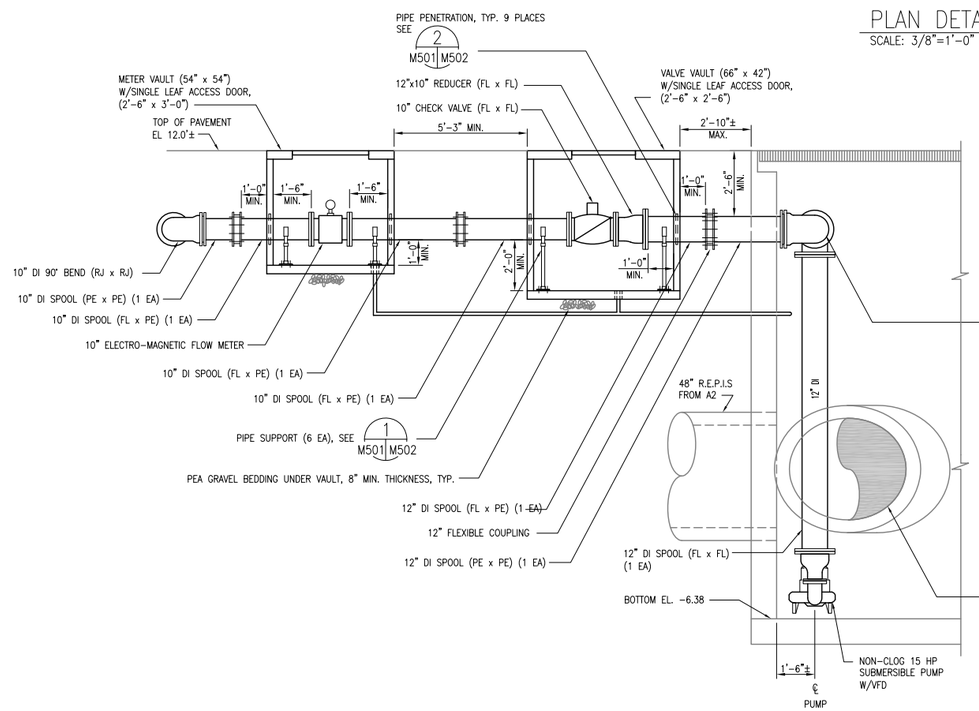

ELEVATION
SCALE: 3/8"=1'-0"
2 M501

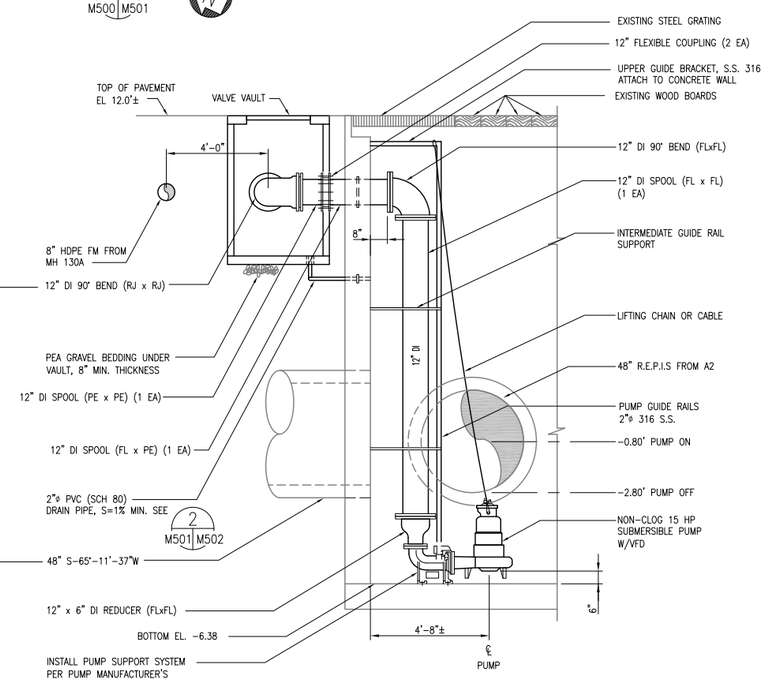

ELEVATION
SCALE: 3/8"=1'-0"
3 M501

EXISTING KING CO. PUMP LEVELS

PUMP 4 ON	1.72'
PUMP 4 OFF	-1.03'
PUMP 3 ON	0.72'
PUMP 3 OFF	-1.53'
PUMP 2 ON	-0.03'
PUMP 2 OFF	-2.03'
PUMP 1 ON	-0.53'
PUMP 1 OFF	-2.53'

NOTES:

1. S.S. 316 BOLTS AND NUTS, TYP. ALL PLACES.
2. NEW OWS 421 PUMP OPERATE IN CONJUCTION WITH MH 130A PUMP. TOTAL MAXIMUM PUMPING FLOW RATE FROM BOTH PUMPS IS 1,500 GPM, WHICH CORRESPONDS WITH THE MAXIMUM TREATMENT RATE. MAXIMUM PUMPING FLOW RATE FROM MH 130A PUMP IS APPROXIMATELY 750 GPM. A THROTTLING VALVE AND VAULT IS NEAR MH 130A TO CONTROL THE FLOW FROM MH 130A TO 530 GPM. SEE DWG. M502. OWS 421 PUMP FLOW RANGE VARIES FROM 970 GPM TO 1,475 GPM, DEPENDING UPON THE FLOW RATE FROM MH 130A. FLOW METERS ARE USED TO CONTROL THE PUMPING RATE OF THE OWS 421 PUMP.
3. SEE SHEETS E116 AND E500 FOR ELECTRICAL WORK.

URS 1501 4TH AVENUE, STE. 1400 SEATTLE, WA 98101-1616 TELEPHONE (206) 438-2700

SYM	REVISION	BY	APPROVED	DATE	SYM	REVISION	BY	APPROVED	DATE
A	PHASE 2 RE-ROUTE STORMWATER LINES – 60% DESIGN	URS	GILLESPIE	04.29.11					
B	PHASE 2 RE-ROUTE STORMWATER LINES – 90% DESIGN	URS	GILLESPIE	05.27.11					
C	PHASE 2 RE-ROUTE STORMWATER LINES – 100% DESIGN	URS	GILLESPIE	06.24.11					
D	PHASE 2 RE-ROUTE STORMWATER LINES – RECORD DRAWINGS	URS	GILLESPIE	02.27.12					

BOEING

ACCEPTABILITY
THIS DESIGN AND/OR SPECIFICATION IS APPROVED

APPROVED BY	DEPT.	DATE

DRAWN JILES	06.24.11	
CHECKED		
ENGINEER GILLESPIE	06.24.11	
CHECKED		
APPROVED		
APPROVED		

SUBTITLE: PLAN, ELEVATIONS AND DETAILS

TITLE: PHASE 2 RE-ROUTE STORMWATER LINES
NORTH BOEING FIELD

MECHANICAL MASTER COL. NBF

CURRENT REVISION	SYMBOL	DATE
	D	06.24.11

SHEET M501

JOB NO. 972108-00

COMP NO.

DWG NO. 3.YD-M501

C:\pwworkdir\NBFDEL Remediation\Phase 2 Re-Route Storm Lines\R04 (EPA Addull)\Mech\3-YD-M501 - Sump Pump Mechanical Plan, Elevations & Details.dwg Mod: 02/22/2012, 11:34 | Plotted: 02/23/2012, 08:34 | Chad_Stickell

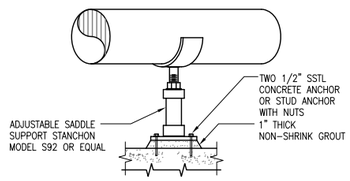

PIPE SUPPORT DETAIL (1 / M501 M502)
SCALE: N.T.S.

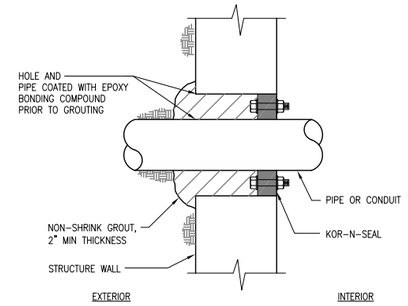

TYPICAL PIPE PENETRATION DETAIL (2 / M501 M502)
SCALE: N.T.S.

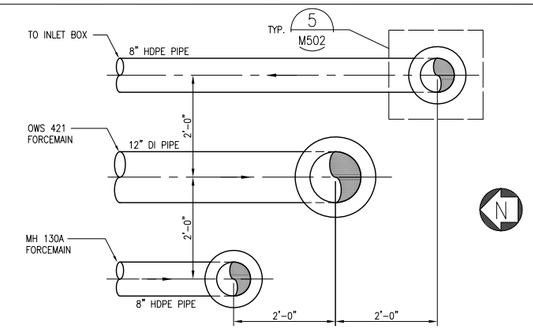

PIPE STUB CONNECTIONS TO LTST (3 / C296 M502)
SCALE: 3/4"=1'-0"

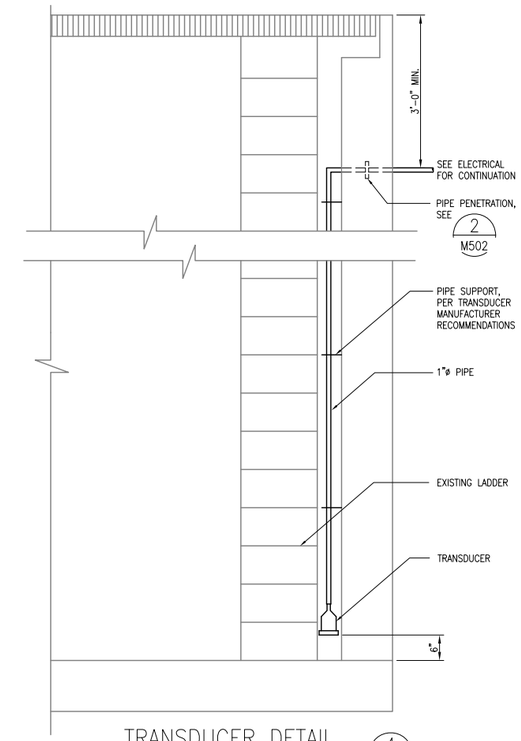

TRANSDUCER DETAIL (4 / M500 M502)
SCALE: 3/4"=1'-0"

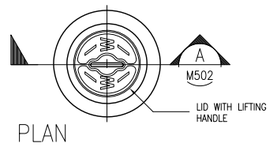

PLAN
SCALE: N.T.S.

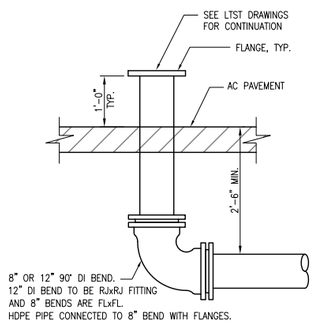

TYPICAL STUB DETAIL (5 / M502)
SCALE: 3/4"=1'-0"

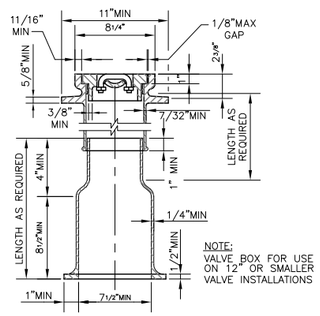

SECTION (A / M502)
SCALE: N.T.S.

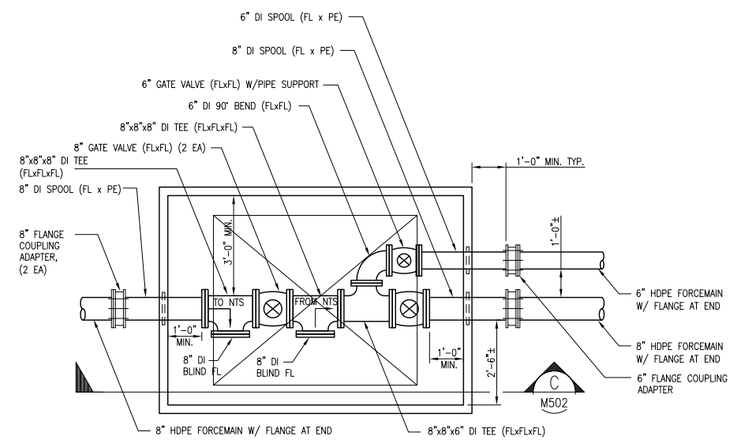

INLET/OUTLET TEES TO POTENTIAL NTS STORMWATER TREATMENT AREA (6 / C295 M502)
SCALE: 1/2"=1'-0"

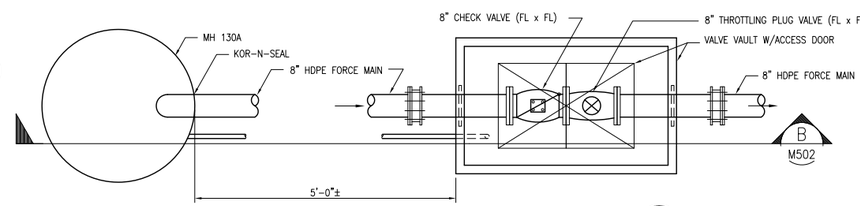

VALVE VAULT DETAIL (8 / C301 M502)
SCALE: 1/2"=1'-0"

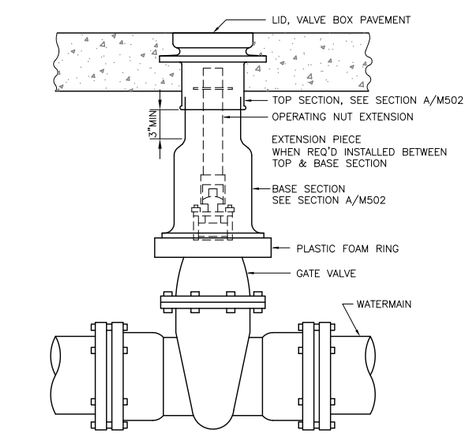

TYPICAL VALVE BOX AND COVER (7 / M501 M502)
SCALE: N.T.S.

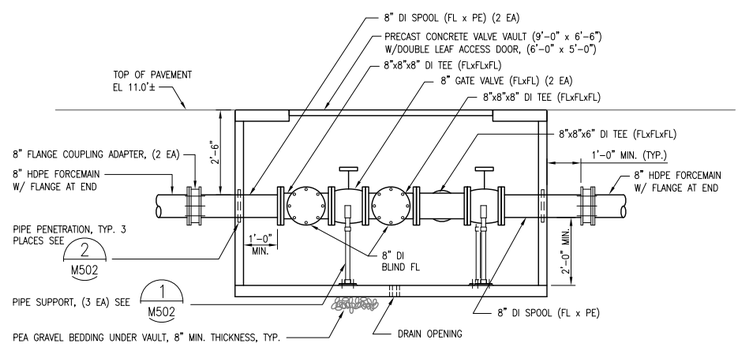

SECTION (C / M502)
SCALE: 1/2"=1'-0"

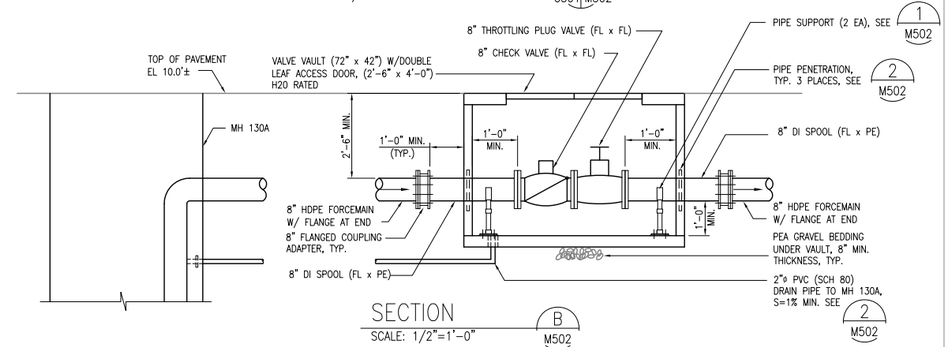

SECTION (B / M502)
SCALE: 1/2"=1'-0"

URS
1501 4TH AVENUE, STE. 1400
SEATTLE, WA 98101-1616
TELEPHONE (206) 438-2700

SYM	REVISION	BY	APPROVED	DATE	SYM	REVISION	BY	APPROVED	DATE
A	PHASE 2 RE-ROUTE STORMWATER LINES – 60% DESIGN	URS	GILLESPIE	04.29.11					
B	PHASE 2 RE-ROUTE STORMWATER LINES – 90% DESIGN	URS	GILLESPIE	05.27.11					
C	PHASE 2 RE-ROUTE STORMWATER LINES – 100% DESIGN	URS	GILLESPIE	06.24.11					
D	PHASE 2 RE-ROUTE STORMWATER LINES – RECORD DRAWINGS	URS	GILLESPIE	02.27.12					

BOEING®

ACCEPTABILITY THIS DESIGN AND/OR SPECIFICATION IS APPROVED

APPROVED BY	DEPT.	DATE

		DATE
DRAWN	JILES	06.24.11
CHECKED		
ENGINEER	GILLESPIE	06.24.11
CHECKED		
APPROVED		
APPROVED		

SUBTITLE: SECTIONS AND DETAILS

TITLE: PHASE 2 RE-ROUTE STORMWATER LINES
NORTH BOEING FIELD

MECHANICAL MASTER COL. NBF

CURRENT REVISION	SYMBOL	DATE
	D	06.24.11

SHEET: M502
JOB NO. 972108-00
COMP NO.
DWG NO. 3.YD-M502

C:\gsc\Boeing\NBFIFEL Remediation\Phase 2 Re-Route Storm Lines\904 (EPA Adduit)\Mech\3-YD-M502 - Details.dwg
Mod: 02/22/2012, 11:33 | Plotted: 02/23/2012, 08:35 | Chad_Stickell

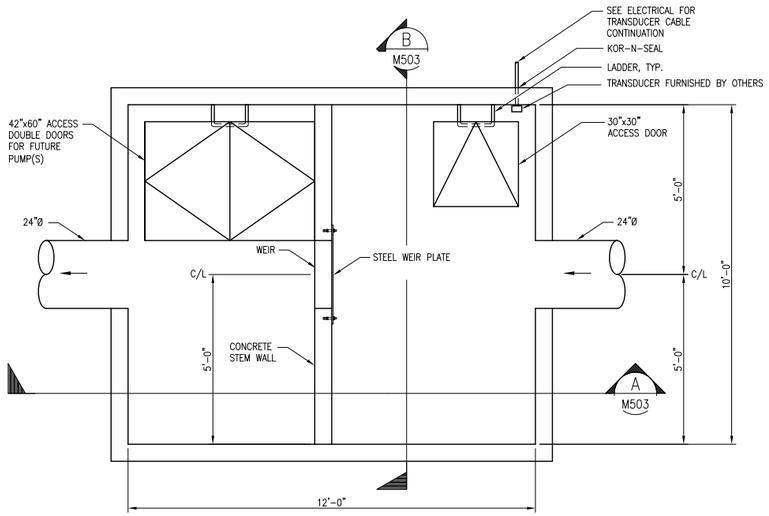

WETWELL PLAN (1 / C296 M503)

SCALE: 1/2"=1'-0"

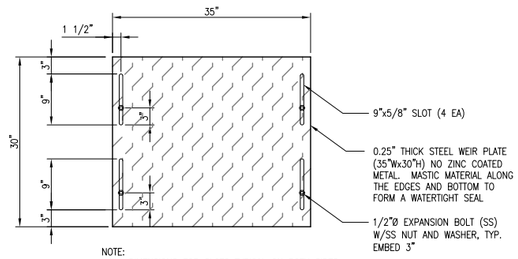

NOTE:
1) DIMENSIONS FOR SLOTS TYPICAL ON BOTH SIDES.
2) NO ZINC COATED METAL.

ADJUSTABLE WEIR PLATE DETAIL (2 / M503)

SCALE: 1"=1'-0"

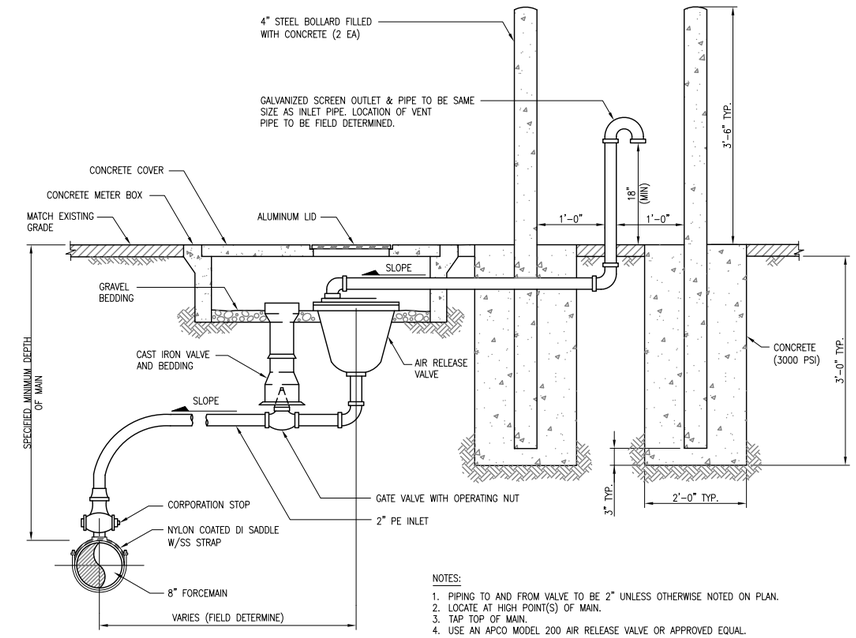

NOTES:
1. PIPING TO AND FROM VALVE TO BE 2" UNLESS OTHERWISE NOTED ON PLAN.
2. LOCATE AT HIGH POINT(S) OF MAIN.
3. TAP TOP OF MAIN.
4. USE AN APCO MODEL 200 AIR RELEASE VALVE OR APPROVED EQUAL.

AIR RELEASE VALVE ASSEMBLY FOR 8-INCH FORCEMAIN (3 / M503)

SCALE: N.T.S.

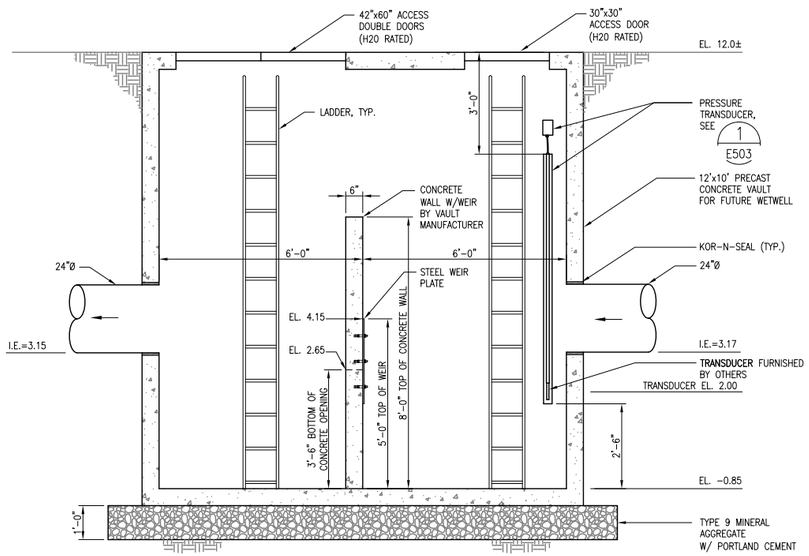

SECTION (A / M503)

SCALE: 1/2"=1'-0"

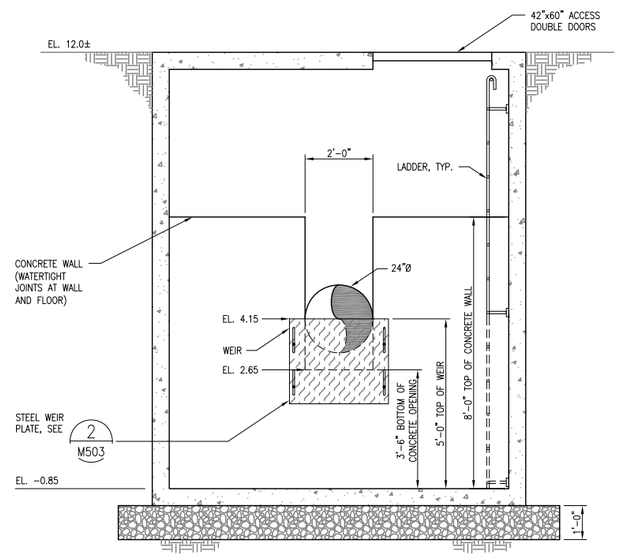

SECTION (B / M503)

SCALE: 1/2"=1'-0"

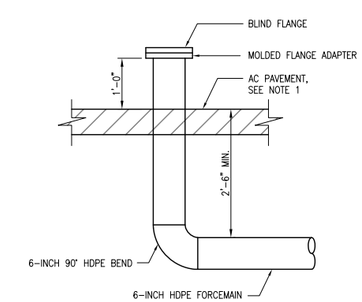

NOTE:
1. SAW CUT AC PAVEMENT AND RESTORE AC PAVEMENT IN-KIND UPON COMPLETION OF THE PIPE WORK.

6-INCH FORCEMAIN STUB DETAIL (4 / C296 M503)

SCALE: 3/4"=1'-0"

URS
1501 4TH AVENUE, STE. 1400
SEATTLE, WA 98101-1616
TELEPHONE (206) 438-2700

SYM	REVISION	BY	APPROVED	DATE	SYM	REVISION	BY	APPROVED	DATE
A	PHASE 2 RE-ROUTE STORMWATER LINES – 60% DESIGN	URS	GILLESPIE	04.29.11					
B	PHASE 2 RE-ROUTE STORMWATER LINES – 90% DESIGN	URS	GILLESPIE	05.27.11					
C	PHASE 2 RE-ROUTE STORMWATER LINES – 100% DESIGN	URS	GILLESPIE	06.24.11					
D	PHASE 2 RE-ROUTE STORMWATER LINES – RECORD DRAWINGS	URS	GILLESPIE	02.27.12					

BOEING®

ACCEPTABILITY
THIS DESIGN AND/OR SPECIFICATION IS APPROVED

APPROVED BY	DEPT.	DATE

		DATE
DRAWN	JILES	06.24.11
CHECKED		
ENGINEER	GILLESPIE	06.24.11
CHECKED		
APPROVED		
APPROVED		

SUBTITLE: SECTIONS AND DETAILS

TITLE: PHASE 2 RE-ROUTE STORMWATER LINES
NORTH BOEING FIELD

MECHANICAL MASTER COL. NBF

CURRENT REVISION	SYMBOL	DATE
	D	06.24.11

SHEET: M503

JOB NO. 972108-00

COMP NO.

DWG NO. 3.YD-M503

C:\pw\Boeing\NBF\EL Remediation\Phase 2 Re-Route Storm Lines\R04 (EPA Addendum)\Mech\3-YD-M503- Details.dwg
Mod: 02/22/2012, 11:03 | Plotted: 02/22/2012, 08:35 | Chad_Stickel

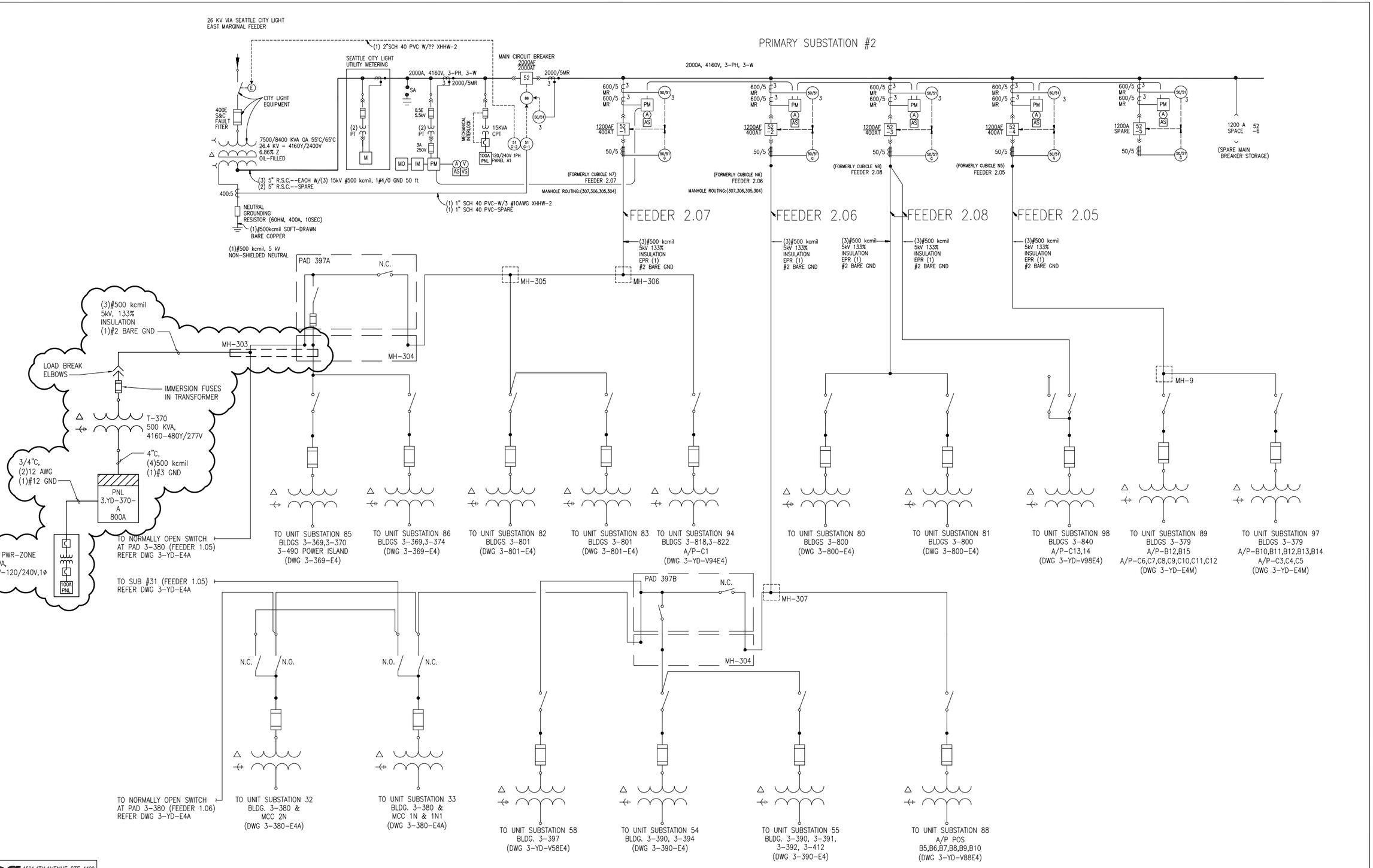

URS
1501 4TH AVENUE, STE. 1400
SEATTLE, WA 98101-1616
TELEPHONE (206) 438-2700

SYM	REVISION	BY	APPROVED	DATE	SYM	REVISION	BY	APPROVED	DATE
A	PHASE 2 RE-ROUTE STORMWATER LINES - 60% DESIGN	URS	GIBSON	04.29.11					
B	PHASE 2 RE-ROUTE STORMWATER LINES - 90% DESIGN	URS	GIBSON	05.27.11					
C	PHASE 2 RE-ROUTE STORMWATER LINES - 100% DESIGN	URS	GIBSON	06.24.11					
D	PHASE 2 RE-ROUTE STORMWATER LINES - RECORD DRAWINGS	URS	GIBSON	02.27.12					

BOEING

ACCEPTABILITY
THIS DESIGN AND/OR SPECIFICATION IS APPROVED

APPROVED BY	DEPT.	DATE

DRAWN OLSZEWSKI	DATE 06.24.11	
CHECKED		
ENGINEER GIBSON	06.24.11	
CHECKED		
APPROVED		
APPROVED		

SUBTITLE: SUB NO. 2 - LINEUP "B" ONE-LINE DIAGRAM

TITLE: PHASE 2 RE-ROUTE STORMWATER LINES
NORTH BOEING FIELD

ELECTRICAL MASTER COL. NBF

CURRENT REVISION	SYMBOL	DATE
	D	06.24.11

SHEET: E4B

JOB NO. 972108-00

COMP NO.

DWG NO. 3.YD-E4B

O:\Jobs\Books\NBFPEL Remediation\Phase 2 Re-Route Storm Lines\R04 (EPA Addulll)\Elec\3-YD-E4B - Sub No 2 One-line Diagram.dwg Mod: 02/22/2012, 11:53 | Plotted: 02/23/2012, 08:35 | Chad_Sikkel

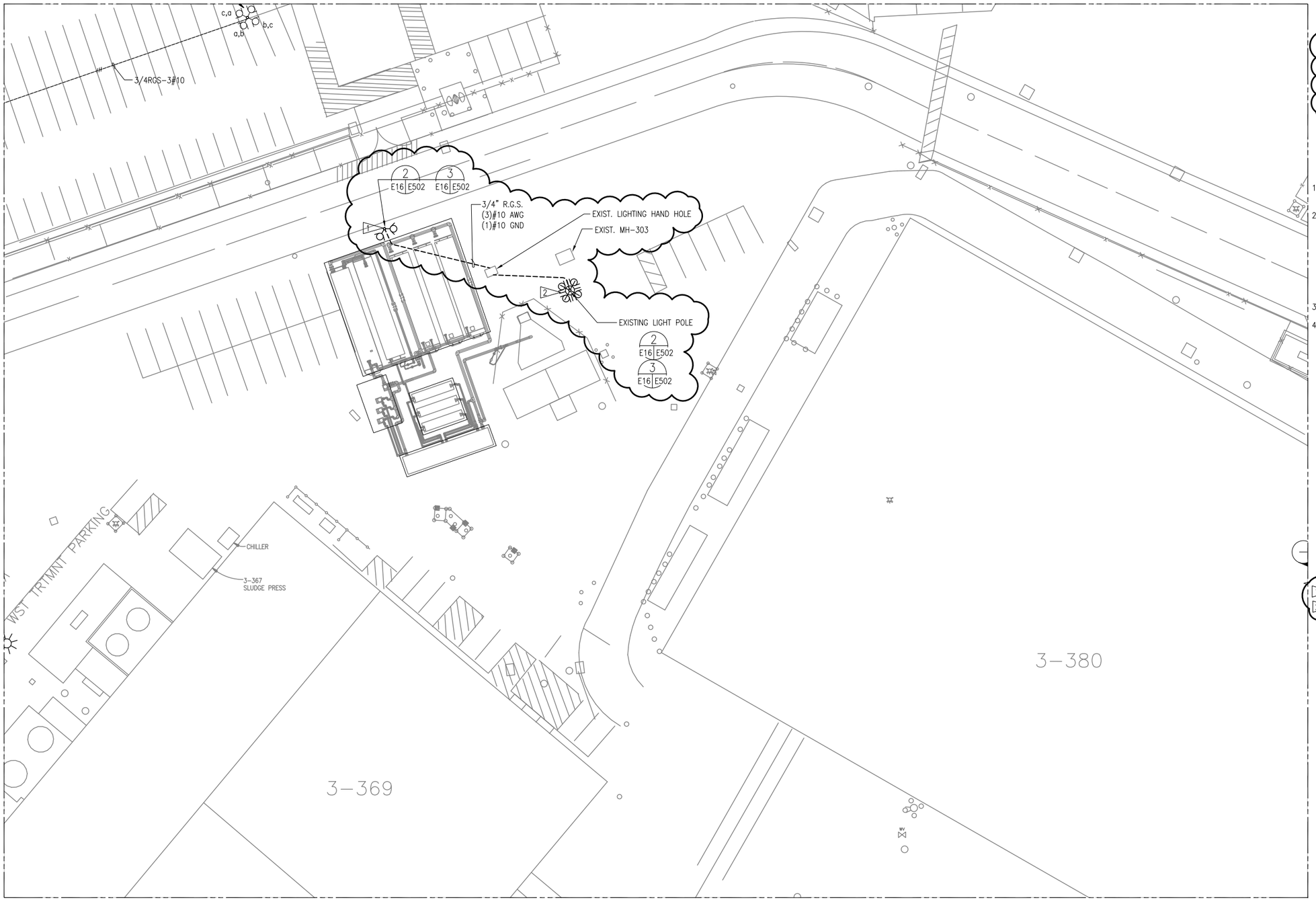

LEGEND:

POLES: LYTE POLE P/N 301-9011-39 DB W/2" TENDON AND BASE COVER (AVAILABLE THROUGH WIDELITE).

2 FIXTURES & BRACKET:
EFIZ-400-W-480-DB-SK-40-EFX-DB-PTA-2090

4 FIXTURES & BRACKET:
EFIS-400-W-480-DB-SK-40-EFX-DB-PTA-4090

LIGHT POLE

GENERAL NOTES:

1. ALL CONDUIT TO BE 3/4"GALVANIZED RIGID STEEL UNLESS OTHERWISE NOTED. WRAP OR COAT ALL STEEL CONDUIT THAT IS TO BE BURIED.
2. ALL WIRE TO BE #12 THHN UNLESS OTHERWISE NOTED ALL WIRE TO BE STRANDED COPPER. THE FOLLOWING COLOR CODING OF CONDUCTORS SHALL BE OBSERVED ON ALL 208Y/120V CIRCUITS:

	208Y/120V	480Y/277V
'A'PHASE (LEFT BUS IN PANEL)	BLACK	BROWN
'B'PHASE (CENTER BUS IN PANEL)	RED	ORANGE
'C'PHASE (RIGHT BUS IN PANEL)	BLUE	YELLOW
NEUTRAL	WHITE	GRAY
GROUND	GREEN	GREEN

3. PERMANENTLY LABEL ALL RECEPTACLES,JUNCTION BOXES, SWITCHES,ETC. WITH CIRCUIT IDENTIFICATION.
4. INSTALL REVISED PANEL SCHEDULES UPON COMPLETION OF JOB.

REFERENCE DRAWINGS

3.YD-E502 DETAILS

CONSTRUCTION NOTES

1. NEW LIGHT POLE.
2. TWO NEW FIXTURE ON EXISTING POLE.

20' 10' 0 20' 40'
SCALE IN FEET

										E13	E12	E11	E10	
								E19	E18	E17	E16	E15	E14	
						E27	E26	E25	E24	E23	E22	E21	E20	
E53	E52			E37	E36	E35	E34	E33	E32	E31	E30	E29	E28	
E51	E50	E49	E48	E47	E46	E45	E44	E43	E42	E41	E40	E39	E38	

KEY PLAN
SCALE : NONE

URS
1501 4TH AVENUE, STE. 1400
SEATTLE, WA 98101-1616
TELEPHONE (206) 438-2700

SYM	REVISION	BY	APPROVED	DATE	SYM	REVISION	BY	APPROVED	DATE
A	PHASE 2 RE-ROUTE STORMWATER LINES - 60% DESIGN	URS	GIBSON	04.29.11					
B	PHASE 2 RE-ROUTE STORMWATER LINES - 90% DESIGN	URS	GIBSON	05.27.11					
C	PHASE 2 RE-ROUTE STORMWATER LINES - 100% DESIGN	URS	GIBSON	06.24.11					
D	PHASE 2 RE-ROUTE STORMWATER LINES - RECORD DRAWINGS	URS	GIBSON	02.27.12					

BOEING

ACCEPTABILITY
THIS DESIGN AND/OR SPECIFICATION IS APPROVED

APPROVED BY	DEPT.	DATE

DRAWN OLSZEWSKI	DATE 06.24.11	
CHECKED		
ENGINEER GIBSON	06.24.11	
CHECKED		
APPROVED		
APPROVED		

SUBTITLE LIGHTING

TITLE PHASE 2 RE-ROUTE STORMWATER LINES
NORTH BOEING FIELD

ELECTRICAL MASTER COL. NBF

CURRENT REVISION D
SYMBOL
DATE 06.24.11
SHEET E16
JOB NO.
COMP NO.
DWG NO. 3.YD-E16

Qc:/geo/Boeing/NBF/PEL Remediation/Phase 2 Re-Route Storm Lines/R04 (EPA Asbuilt)/Elec/3-YD-E16 - Lighting.dwg Mod:02/22/2012, 11:52 | Plotted:02/23/2012, 08:35 | Chad_Siskel

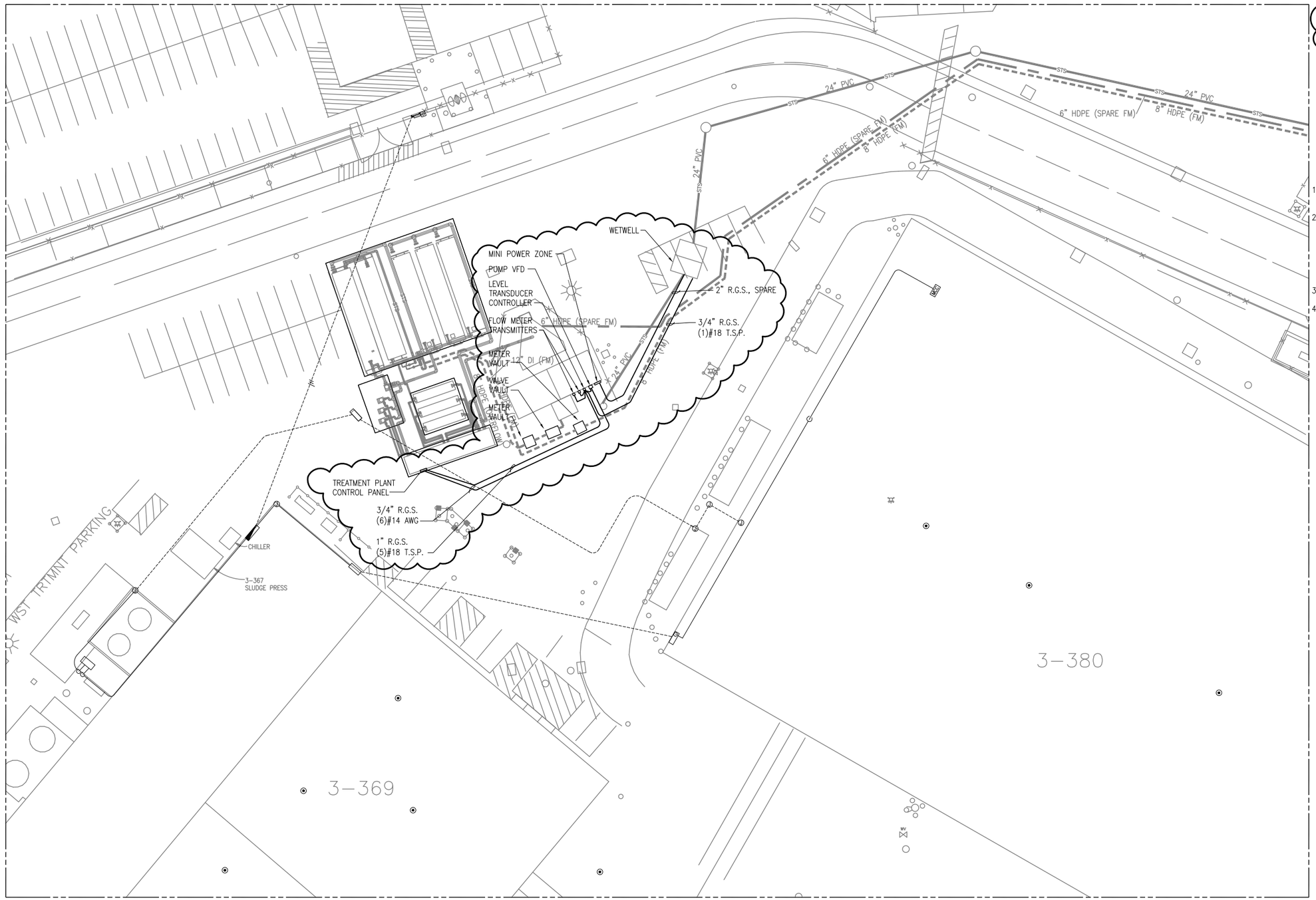

LEGEND

- 208Y/120V NEW UG CONDUIT RUN
- CONDUIT BENT DOWN OR AWAY CONDUIT

GENERAL NOTES

1. ALL CONDUIT TO BE 3/4"GALVANIZED RIGID STEEL UNLESS OTHERWISE NOTED. WRAP OR COAT ALL STEEL CONDUIT THA IS TO BE BURIED.
2. ALL WIRE TO BE #12 THHN UNLESS OTHERWISE NOTED ALL WIRE IS TO BE STRANDED COPPER. THE FOLLOWING COLOR CODING OF CONDUCTORS SHALL BE OBSERVED ON ALL 208Y/120V CIRCUITS:

'A'PHASE (LEFT BUS IN PANEL)	BLACK
'B'PHASE (CENTER BUS IN PANEL)	RED
'C'PHASE (RIGHT BUS IN PANEL)	BLUE
NEUTRAL	WHITE

3. PERMANENTLY LABEL ALL RECEPTACLES,JUNCTION BOXES, SWITCHES,ETC. WITH CIRCUIT IDENTIFICATION.
4. INSTALL REVISED PANEL SCHEDULES UPON COMPLETION OF JOB.

REFERENCE DRAWINGS

CONSTRUCTION NOTES

20' 10' 0 20' 40'
SCALE IN FEET

														E63	E62	E61	E60
												E69	E68	E67	E66	E65	E64
									E77	E76	E75	E74	E73	E72	E71	E70	
E103	E102				E87	E86	E85	E84	E83	E82	E81	E80	E79	E78			
E101	E100	E99	E98	E97	E96	E95	E94	E93	E92	E91	E90	E89	E88				

KEY PLAN
SCALE : NONE

URS
1501 4TH AVENUE, STE. 1400
SEATTLE, WA 98101-1616
TELEPHONE (206) 438-2700

SYM	REVISION	BY	APPROVED	DATE	SYM	REVISION	BY	APPROVED	DATE
A	PHASE 2 RE-ROUTE STORMWATER LINES – 60% DESIGN	URS	GIBSON	04.29.11					
B	PHASE 2 RE-ROUTE STORMWATER LINES – 90% DESIGN	URS	GIBSON	05.27.11					
C	PHASE 2 RE-ROUTE STORMWATER LINES – 100% DESIGN	URS	GIBSON	06.24.11					
D	PHASE 2 RE-ROUTE STORMWATER LINES – RECORD DRAWINGS	URS	GIBSON	02.27.12					

BOEING

ACCEPTABILITY
THIS DESIGN AND/OR SPECIFICATION IS APPROVED

APPROVED BY	DEPT.	DATE

DRAWN OLSZEWSKI	DATE 06.24.11	
CHECKED		
ENGINEER GIBSON	06.24.11	
CHECKED		
APPROVED		
APPROVED		

SUBTITLE 208Y/120V POWER & GROUNDING

TITLE PHASE 2 RE-ROUTE STORMWATER LINES
NORTH BOEING FIELD

ELECTRICAL MASTER COL. NBF

CURRENT REVISION	SYMBOL	DATE
	D	06.24.11

SHEET E66

JOB NO. | COMP NO.

DWG NO. 3.YD-E66

C:\geo\Boeing\NBF\FEL Remediation\Phase 2 Re-Route Storm Lines\R04 (EPA Actual)\Elec\3-YD-E66 - 120V Power & Grounding.dwg Mod: 02/22/2012, 11:32 | Plotted: 02/23/2012, 08:35 | Chad_Stokel

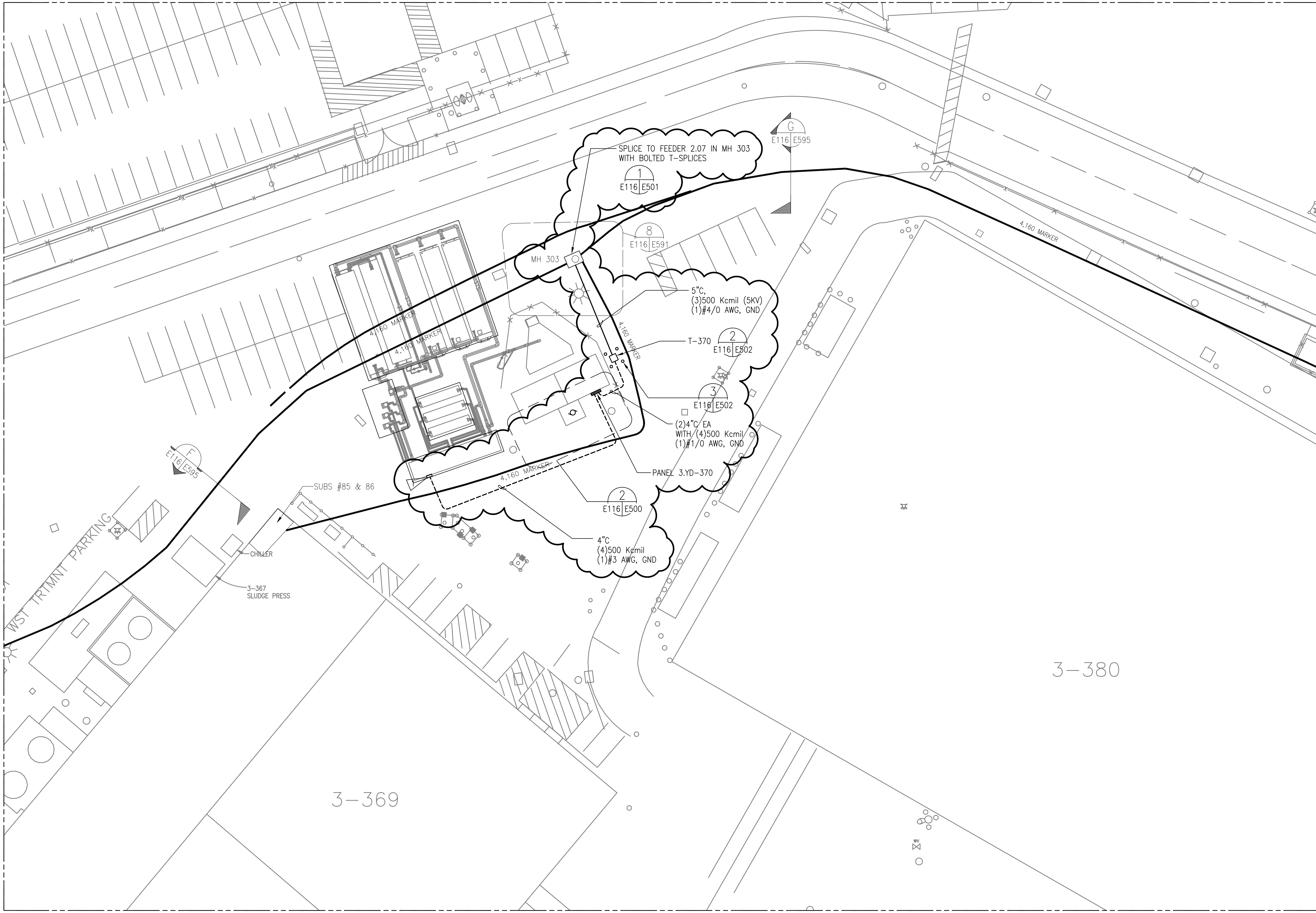

LEGEND:

- - - - - - - - 480Y/277 VOLT NEW UG CONDUIT RUNS
——— 4160 VOLT NEW UG CONDUIT RUNS
——— 26,000 VOLT SCL SERVICE
480Y/277V VOLT THREE PHASE LOAD
TRANSFORMER
PUMP
CONTROL PANEL

GENERAL NOTES:

1 ALL CONDUIT TO BE 3/4"GALVANIZED RIGID STEEL UNLESS OTHERWISE NOTED.

2 ALL WIRE TO BE #12 THHN UNLESS OTHERWISE NOTED THE FOLLOWING COLOR CODING OF CONDUCTORS SHALL BE OBSERVED ON ALL 208Y/120V CIRCUITS:

'A'PHASE (LEFT BUS IN PANEL)	BLACK
'B'PHASE (CENTER BUS IN PANEL)	RED
'C'PHASE (RIGHT BUS IN PANEL)	BLUE
NEUTRAL	WHITE

3 DYMO LABEL ALL RECEPTACLES,JUNCTION BOXES, SWITCHES,ETC. WITH CIRCUIT IDENTIFICATION.

4 INSTALL REVISED PANEL SCHEDULES UPON COMPLETION OF JOB.

REFERENCE DRAWINGS:

3.YD-C85
3.YD-E4

3.YD-E500
3.YD-E501
3.YD-E502

CONSTRUCTION NOTES:

1 TREATMENT PLANT CONTROL PANEL

20' 10' 0 20' 40'
SCALE IN FEET

										E113	E112	E111	E110
								E119	E118	E117	E116	E115	E114
						E127	E126	E125	E124	E123	E122	E121	E120
E153	E152			E137	E136	E135	E134	E133	E132	E131	E130	E129	E128
E151	E150	E149	E148	E147	E146	E145	E144	E143	E142	E141	E140	E139	E138

KEY PLAN
SCALE : NONE
N

URS 1501 4TH AVENUE, STE. 1400
SEATTLE, WA 98101-1616
TELEPHONE (206) 438-2700

SYM	REVISION	BY	APPROVED	DATE	SYM	REVISION	BY	APPROVED	DATE
A	PHASE 2 RE-ROUTE STORMWATER LINES – 60% DESIGN	URS	GIBSON	04.29.11					
B	PHASE 2 RE-ROUTE STORMWATER LINES – 90% DESIGN	URS	GIBSON	05.27.11					
C	PHASE 2 RE-ROUTE STORMWATER LINES – 100% DESIGN	URS	GIBSON	06.24.11					
D	PHASE 2 RE-ROUTE STORMWATER LINES – RECORD DRAWINGS	URS	GIBSON	02.27.12					

BOEING®

ACCEPTABILITY
THIS DESIGN AND/OR SPECIFICATION IS APPROVED

APPROVED BY	DEPT.	DATE

DRAWN	OLSZEWSKI	DATE 06.24.11
CHECKED		
ENGINEER	GIBSON	06.24.11
CHECKED		
APPROVED		
APPROVED		

SUBTITLE: 480V, MEDIUM VOLTAGE
TITLE: PHASE 2 RE-ROUTE STORMWATER LINES
NORTH BOEING FIELD
ELECTRICAL MASTER COL. NBF

CURRENT REVISION SYMBOL D DATE 06.24.11
SHEET E116
JOB NO.
COMP NO.
DWG NO. 3.YD-E116

Q:\geo\Boeing\NBF\PEL Remediation\Phase 2 Re-Route Storm Lines\R04 (EPA Asbuilt)\Elec\3-YD-E116 - 480V Medium Voltage.dwg Mod: 02/22/2012, 11:32 | Plotted: 02/23/2012, 08:35 | Chad_Stickel

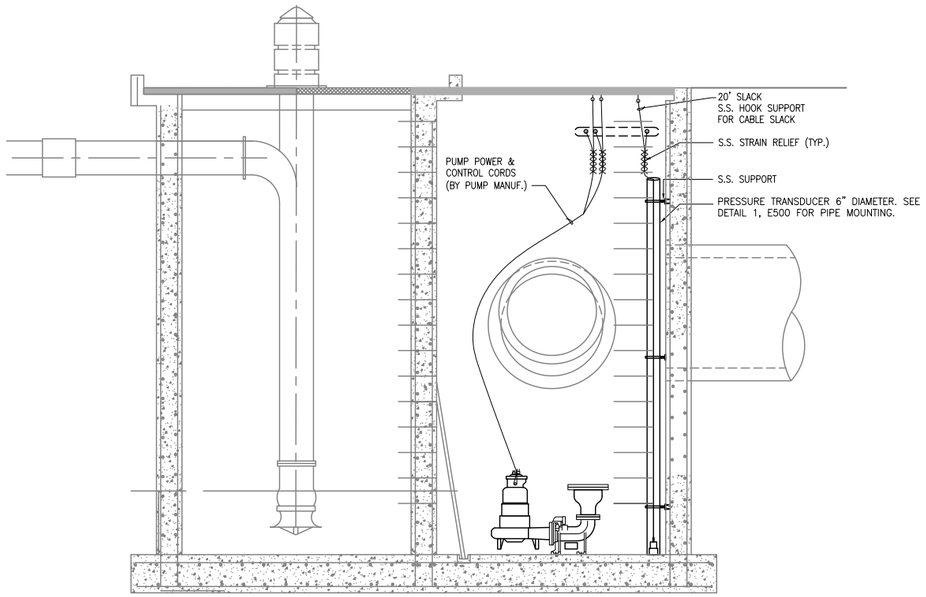

KING COUNTY LIFT
STATION 431 SECTION (A / E500)
SCALE: 3/8"=1'-0"

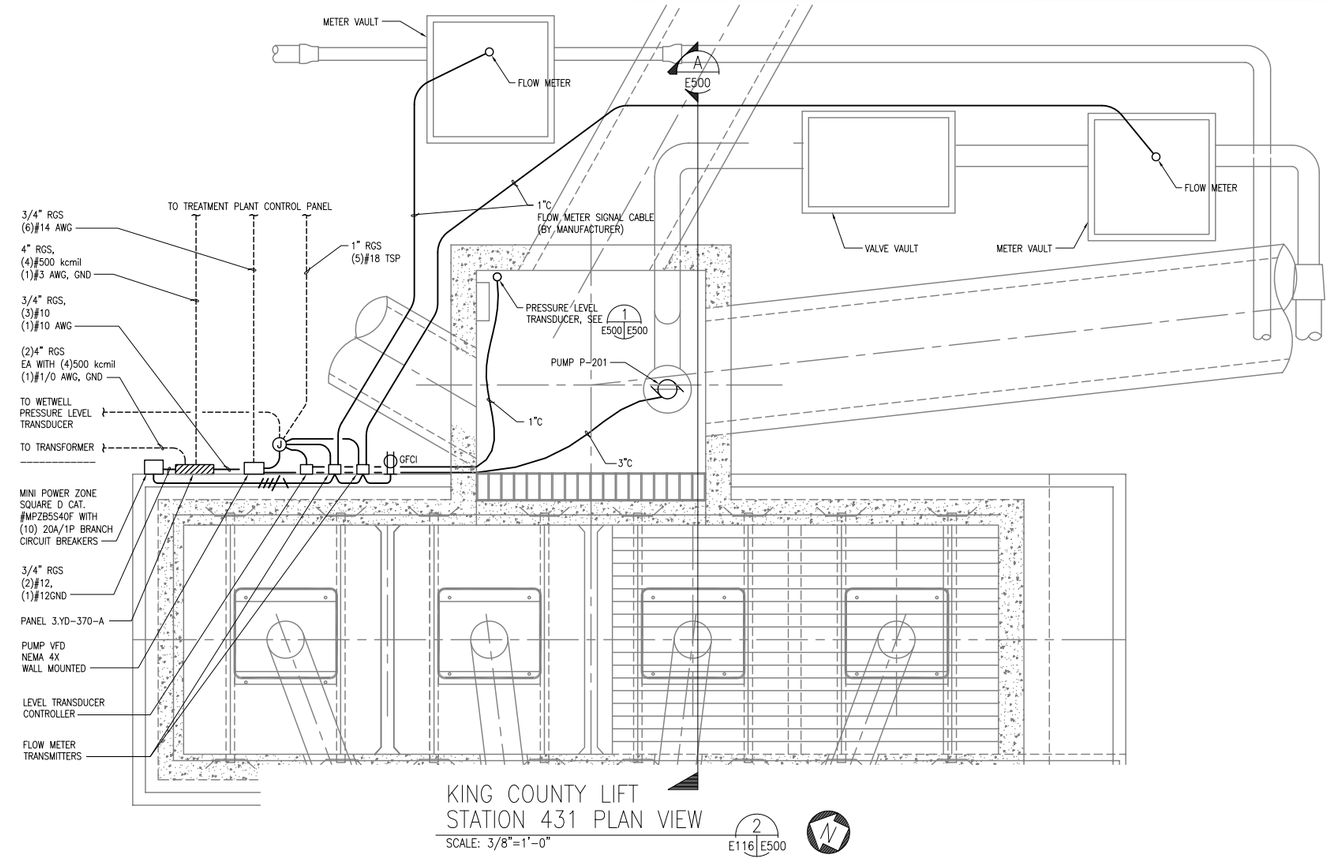

KING COUNTY LIFT
STATION 431 PLAN VIEW (2 / E116 E500)
SCALE: 3/8"=1'-0"

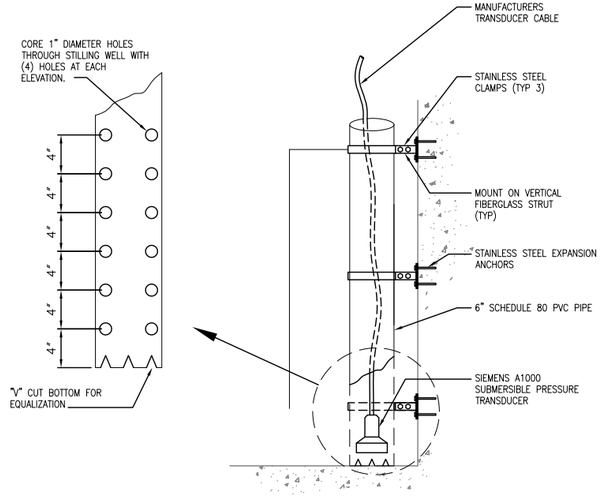

PRESSURE TRANSDUCER DETAIL (1 / E500)
SCALE: NTS

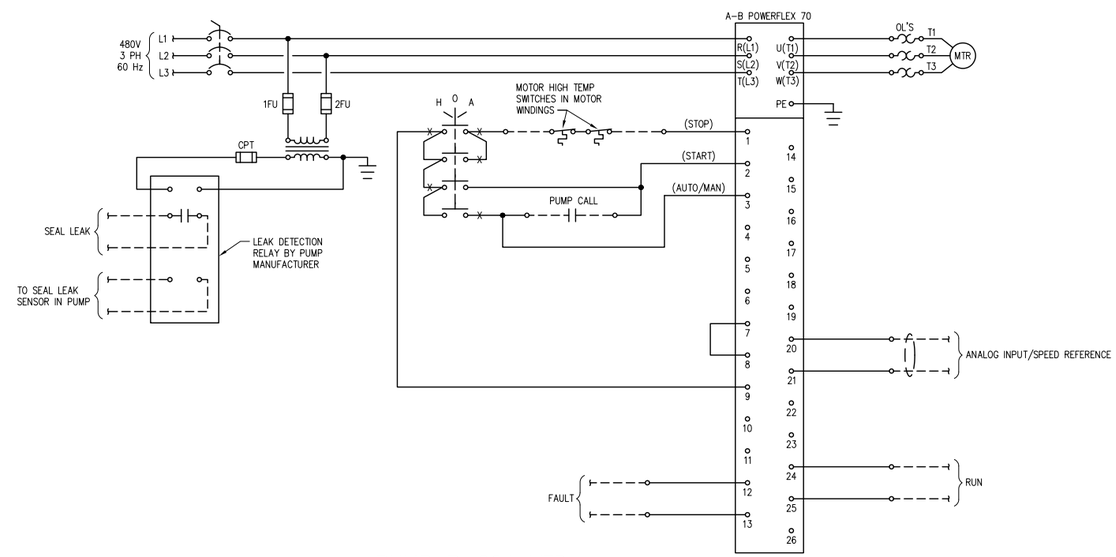

PUMP P-201 VFD

URS 1501 4TH AVENUE, STE. 1400
SEATTLE, WA 98101-1616
TELEPHONE (206) 438-2700

SYM	REVISION	BY	APPROVED	DATE	SYM	REVISION	BY	APPROVED	DATE
A	PHASE 2 RE-ROUTE STORMWATER LINES – 60% DESIGN	URS	GIBSON	04.29.11					
B	PHASE 2 RE-ROUTE STORMWATER LINES – 90% DESIGN	URS	GIBSON	05.27.11					
C	PHASE 2 RE-ROUTE STORMWATER LINES – 100% DESIGN	URS	GIBSON	06.24.11					
D	PHASE 2 RE-ROUTE STORMWATER LINES – RECORD DRAWINGS	URS	GIBSON	02.27.12					

BOEING

ACCEPTABILITY
THIS DESIGN AND/OR SPECIFICATION IS APPROVED

APPROVED BY	DEPT.	DATE

DRAWN OLSZEWSKI	06.24.11	
CHECKED		
ENGINEER GIBSON	06.24.11	
CHECKED		
APPROVED		
APPROVED		

SUBTITLE: SECTIONS AND DETAILS

TITLE: PHASE 2 RE-ROUTE STORMWATER LINES
NORTH BOEING FIELD

ELECTRICAL MASTER COL. NBF

CURRENT REVISION	SYMBOL	DATE
	D	06.24.11

SHEET: E500

JOB NO. 972108-00

COMP NO.

DWG NO. 3.YD-E500

O:\gen\Boeing\NBFP\EL Remediation\Phase 2 Re-Route Storm Lines\R04 (EPA Adult)\Elec\3-YD-E500 - Pump Control Panel.dwg Mod: 02/22/2012, 11:31 | Plotted: 02/23/2012, 08:35 | Chad_Sikkell

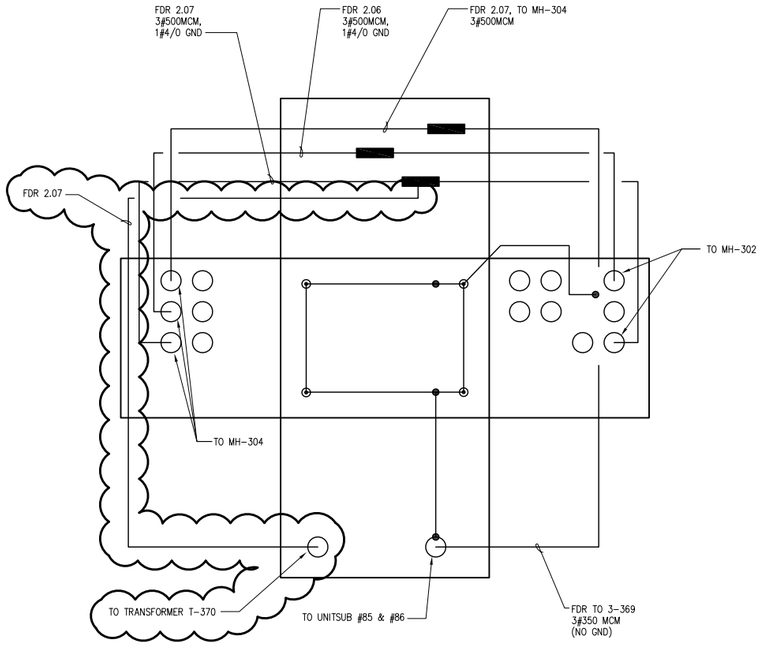

MH-303

DETAIL 1 E116 E501

SCALE: NTS

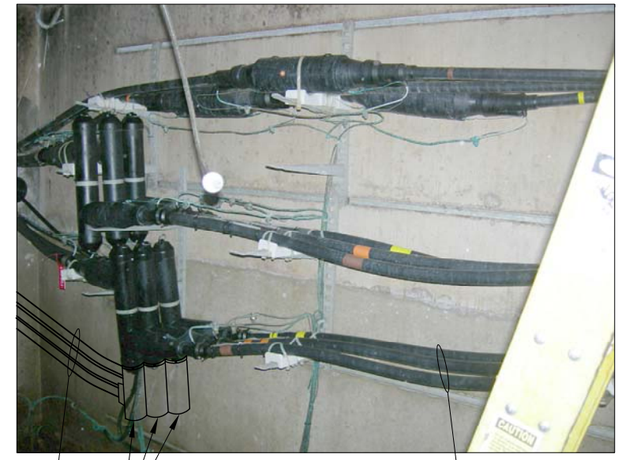

MH 303 WEST WALL

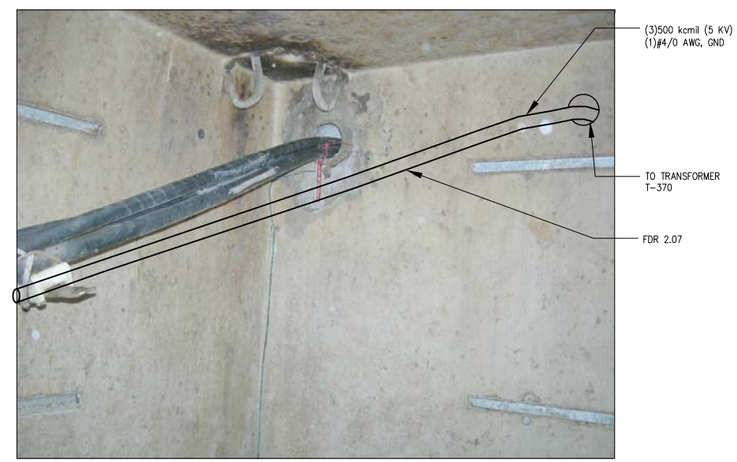

MH 303 EAST WALL

URS 1501 4TH AVENUE, STE. 1400
SEATTLE, WA 98101-1616
TELEPHONE (206) 438-2700

SYM	REVISION	BY	APPROVED	DATE	SYM	REVISION	BY	APPROVED	DATE
A	PHASE 2 RE-ROUTE STORMWATER LINES – 60% DESIGN	URS	GIBSON	04.29.11					
B	PHASE 2 RE-ROUTE STORMWATER LINES – 90% DESIGN	URS	GIBSON	05.27.11					
C	PHASE 2 RE-ROUTE STORMWATER LINES – 100% DESIGN	URS	GIBSON	06.24.11					
D	PHASE 2 RE-ROUTE STORMWATER LINES – RECORD DRAWINGS	URS	GIBSON	02.27.12					

BOEING®

ACCEPTABILITY
THIS DESIGN AND/OR SPECIFICATION IS APPROVED

APPROVED BY	DEPT.	DATE

DRAWN OLSZEWSKI	DATE 06.24.11	
CHECKED		
ENGINEER GIBSON	06.24.11	
CHECKED		
APPROVED		
APPROVED		

SUBTITLE: ONE-LINE DIAGRAM

TITLE: PHASE 2 RE-ROUTE STORMWATER LINES
NORTH BOEING FIELD

ELECTRICAL MASTER COL. NBF

CURRENT REVISION	SYMBOL	DATE
	D	06.24.11

SHEET: E501

JOB NO. 972108-00

COMP NO.

DWG NO. 3.YD-E501

C:\gsn\Boeing\NBFPEL Remediation\Phase 2 Re-Route Storm Lines\R04 (EPA Addutt)\Elec\3-YD-E501 - One-Line diagram.dwg Mod: 02/22/2012, 11:31 | Plotted: 02/23/2012, 08:35 | Chad_Sikkell

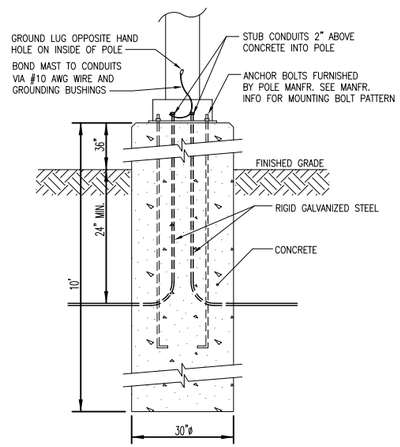

DETAIL – POLE BASE (1 / E116 | E502)
SCALE: N.T.S.

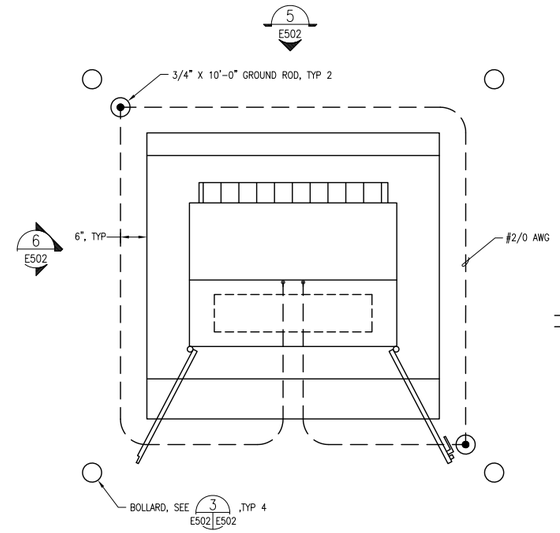

PAD MOUNTED TRANSFORMER PLAN DETAIL (2 / E116 | E502)
SCALE: N.T.S.

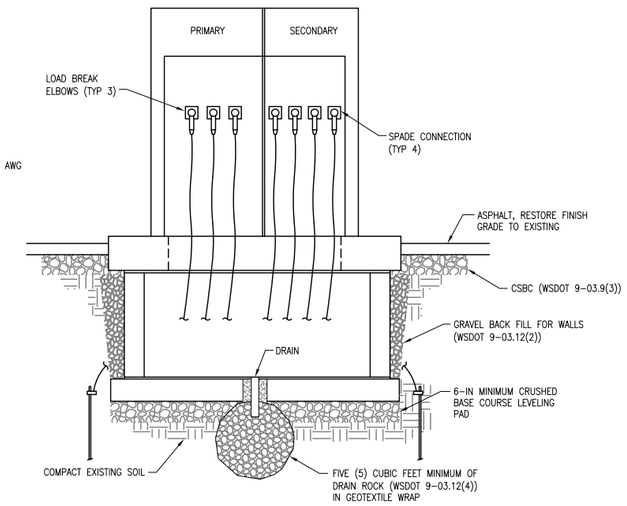

ELEVATION (5 / E502)
SCALE: NTS

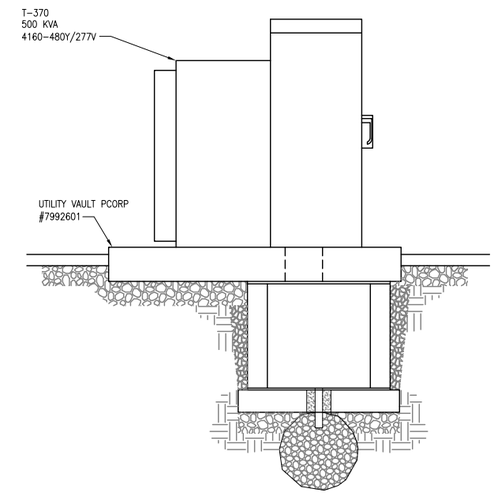

ELEVATION (6 / E502)
SCALE: NTS

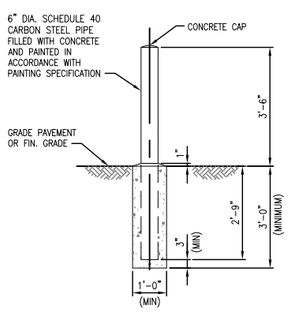

BOLLARD (3 / E116 | E502)
SCALE: N.T.S.

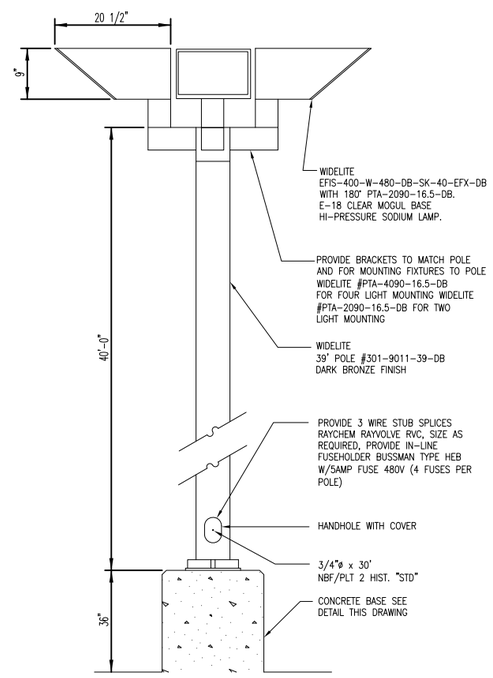

DETAIL LIGHTING POLE (4 / E16 | E502)
SCALE: NO SCALE

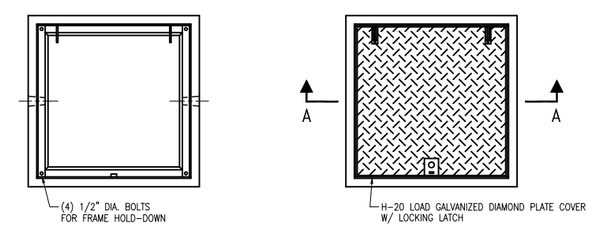

PLAN VIEW
COVER NOT SHOWN

PLAN VIEW
SHOWN WITH COVER

NOTE:

ALL BOX DIMENSIONS ARE APPROXIMATE. EXACT CONFIGURATIONS VARY AMONG MANUFACTURERS.

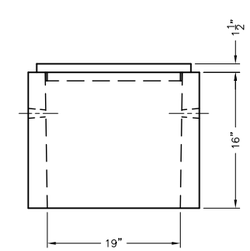

FRONT VIEW

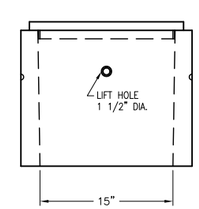

SIDE VIEW

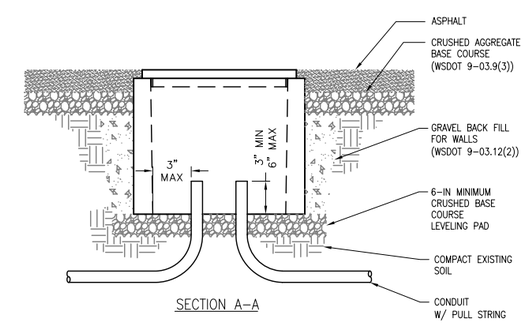

SECTION A–A

ELECTRICAL PULLBOX (7 / C295, C296, C301 | E502)
SCALE: N.T.S.

URS
1501 4TH AVENUE, STE. 1400
SEATTLE, WA 98101-1616
TELEPHONE (206) 438-2700

SYM	REVISION	BY	APPROVED	DATE	SYM	REVISION	BY	APPROVED	DATE
A	PHASE 2 RE-ROUTE STORMWATER LINES – 60% DESIGN	URS	GIBSON	04.29.11					
B	PHASE 2 RE-ROUTE STORMWATER LINES – 90% DESIGN	URS	GIBSON	05.27.11					
C	PHASE 2 RE-ROUTE STORMWATER LINES – 100% DESIGN	URS	GIBSON	06.24.11					
D	PHASE 2 RE-ROUTE STORMWATER LINES – RECORD DRAWINGS	URS	GIBSON	02.27.12					

BOEING

ACCEPTABILITY
THIS DESIGN AND/OR SPECIFICATION IS APPROVED

APPROVED BY	DEPT.	DATE

DRAWN OLSZEWSKI	DATE 06.24.11	
CHECKED		
ENGINEER GIBSON	06.24.11	
CHECKED		
APPROVED		
APPROVED		

SUBTITLE: DETAILS

TITLE: PHASE 2 RE-ROUTE STORMWATER LINES
NORTH BOEING FIELD

ELECTRICAL MASTER COL. NBF

CURRENT REVISION	SYMBOL	DATE
	D	06.24.11

SHEET: E502

JOB NO. 972108-00

COMP NO.

DWG NO. 3.YD-E502

C:\pw\Boeing\NBF\PEL Remediation\Phase 2 Re-Route Storm Lines\R04 (EPA Adult)\Elec\3-YD-E502 - Details.dwg
Mod: 02/22/2012, 11:30 | Plotted: 02/23/2012, 08:35 | Chad_Sibbel

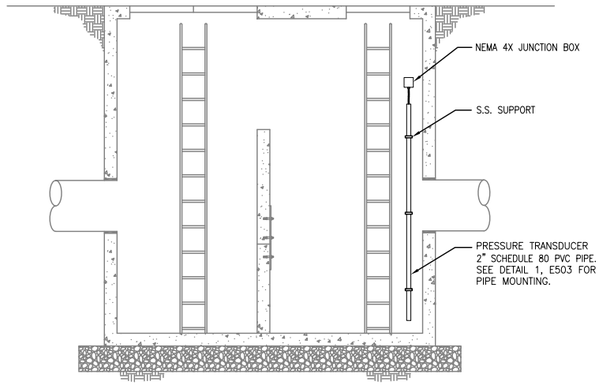

WETWELL ELEVATION

SCALE: NTS

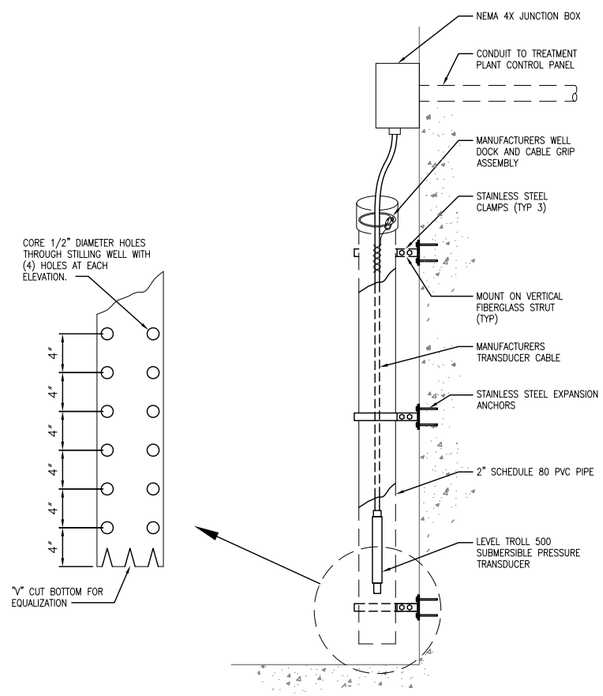

PRESSURE TRANSDUCER DETAIL 1 / E503

SCALE: NTS

URS
1501 4TH AVENUE, STE. 1400
SEATTLE, WA 98101-1616
TELEPHONE (206) 438-2700

SYM	REVISION	BY	APPROVED	DATE	SYM	REVISION	BY	APPROVED	DATE
A	PHASE 2 RE-ROUTE STORMWATER LINES – 60% DESIGN	URS	GIBSON	04.29.11					
B	PHASE 2 RE-ROUTE STORMWATER LINES – 90% DESIGN	URS	GIBSON	05.27.11					
C	PHASE 2 RE-ROUTE STORMWATER LINES – 100% DESIGN	URS	GIBSON	06.24.11					
D	PHASE 2 RE-ROUTE STORMWATER LINES – RECORD DRAWINGS	URS	GIBSON	02.27.12					

BOEING®

ACCEPTABILITY
THIS DESIGN AND/OR SPECIFICATION IS APPROVED

APPROVED BY	DEPT.	DATE

DRAWN OLSZEWSKI		DATE 06.24.11
CHECKED		
ENGINEER GIBSON		06.24.11
CHECKED		
APPROVED		
APPROVED		

SUBTITLE: SECTIONS AND DETAILS

TITLE: PHASE 2 RE-ROUTE STORMWATER LINES
NORTH BOEING FIELD

ELECTRICAL MASTER COL. NBF

CURRENT REVISION	SYMBOL	DATE
	D	06.24.11

SHEET: E503

JOB NO. 972108-00

COMP NO.

DWG NO. 3.YD-E503

O:\proj\Boeing\NBF\FEL Remediation\Phase 2 Re-Route Storm Lines\R04 (EPA Addendum)\Elec\3-YD-E503 - Details.dwg Mod: 02/22/2012, 11:50 | Plotted: 02/22/2012, 08:35 | Chad_Stirkell

APPENDIX C

Environmental Soil Screening Analytical Results and Laboratory Reports

Analytical Results

TABLE C-1
SUMMARY OF STOCKPILE SAMPLING RESULTS
BOEING - NORTH BOEING FIELD
LTST SYSTEM INSTALLATION

Stockpile Name	Stockpile Volume	Volume Reused	Sample Name	Summary of Analytical Materials											
				PCBs	TPH-Diesel	TPH-Oil	TPH-Gasoline	VOCs	pH (SU)	As	Cd	Cr	Hg	Pb	Lab Rpt ID
	(CY Est.)	(CY Est.)		mg/kg											
SP-1,	60	0	NBF-RRSS-A-070811	0.098	18	56	<7.1	-	-	<6	<0.2	12.7	0.04	6	TD49
SP-2	**200**	**100**	**NBF-RRSS-A-071411**	**<0.033**	**9.8**	**32**	**12**	**-**	**-**	**6**	**<0.2**	**11.9**	**<0.02**	**12**	**TE14**
SP-3	**200**	**200**	**NBF-RRSS-A-071511**	**<0.032**	**9.2**	**38**	**<6.4**	**-**	**-**	**<5**	**<0.2**	**12.5**	**<0.02**	**10**	**TE31**
SP-4	**200**	**200**	**NBF-RRSS-A-072011**	**<0.031**	**17**	**55**	**<6.7**	**-**	**-**	**<5**	**<0.2**	**11.4**	**<0.02**	**9**	**TE89**
SP-5	200	0	NBF-RRSS-A-072611	<0.031	32	110	<6.4	-	-	7	<0.2	13.2	<0.03	29	TF62
SP-6	200	0	NBF-RRSS-A-072911	310	13	49	<5.6	-	-	<5	0.3	14.5	0.03	11	TG15
SP-7	**150**	**150**	**NBF-RRSS-A-080911**	**<0.032**	**8.5**	**26**	**<5.4**	**-**	**-**	**<5**	**<0.2**	**10.7**	**<0.02**	**7**	**TH79**
Soil Skids / Drums	<10	0	NBF-SOILSKID-1-072611 NBF-SOILSKID-2-072611 NBF-N111418 NBF-N111420	280 570 <0.031 <0.031	72 120 <5.2 11	240 230 <10 46	NA	-	-	<0.02[1]	<0.01[1]	<0.02[1]	<0.0001[1]	<0.1[1]	TF62
SP-8	**150**	**150**	**NBF-RRSS-A-080311**	**<0.032**	**24**	**220**	**<5.6**	**-**	**-**	**5**	**0.3**	**23.6**	**0.03**	**19**	**TG89**
SP-9	150	0	NBF-RRSS-A-081011	<0.032	<5.2	<10	<5.5	-	-	<5	<0.2	12.6	<0.02	9	TI03
SP-9 (second sample)		0	NBF-RRSS-B-110111	0.3	50	340	<6.0	-	-	<5	<0.2	13.3	0.03	12	TU98
SP-10	**200**	**50**	**NBF-RRSS-A-081511**	**<0.032**	**14**	**59**	**<5.6**	**-**	**-**	**<5**	**0.3**	**13.2**	**0.03**	**13**	**TI78**
SP-11	250	0	NBF-RRSS-A-082411	<0.031	12	60	<6.5	-	-	<5	0.2	11.1	<0.02	4	TJ66
SP-12	**200**	**200**	**NBF-RRSS-A-083111**	**<0.033**	**12**	**41**	**<6.4**	**-**	**-**	**<5**	**<0.2**	**18.9**	**<0.02**	**9**	**TK54**
SP-13	200	0	NBF-RRSS-A-091211	<0.031	22	55	<6.0	-	-	<5	<0.2	11.8	<0.02	6	TL91
SP-14	40	0	NBF-RRSS-A-090811	<0.031	24	56	<6.2	-	-	<5	<0.2	11.7	0.04	11	TL45
SP-15	210	0	NBF-RRSS-A-090811	0.156	33	160	<5.9	-	-	<5	<0.2	17.1	0.13	31	TL45
SP-16	200	0	NBF-RRSS-A-092311	0.970	11	24	<6.2	-	-	10	0.2	13.1	0.92	15	TN81
Soil Drum-Wet Well	< 1 CY	0	NBF-RRSS-A-092711	<0.032	29	55	<8.3	ND	6.87	7	10.1	16.9	0.12	7	TO44
Dewatering Box Soil	<10 CY	0	NBF-RRSS-A-100311	0.065	5.3	11	<6.2	-	-	<5	<0.2	12.9	<0.02	4	TP85
SP-17	175	0	NBF-RRSS-B-100311	0.036	5.6	11	<7.1	-	-	7	0.3	14.2	0.05	9	TP85
SP-18	100	0	NBF-RRSS-C-100311	<0.032	6.5	13	<9.0	-	-	8	0.3	15.7	0.11	31	TP85
SP-19	300	0	NBF-RRSS-A-101411	<0.031	<3.6	7.8	51	-	-	5	<0.2	14.3	0.04	9	TS21
SP-20	70	0	NBF-RRSS-A-110111	<0.031	16	54	<8.6	-	-	<6	<0.2	12.1	0.05	12	TU98

ND - Not Detected

NOTES:
1. Samples results are in mg/L; samples analyzed using toxicity characteristic leaching procedure (TCLP).
2. Bold text indicates soil was reused at the site for backfill material.

Laboratory Analytical Reports

Analytical Resources, Incorporated
Analytical Chemists and Consultants

July 12, 2011

Jeremy Davis
Landau Associates, Inc.
130 Second Ave
Edmonds, WA 98020

RE: Project: NBF – LTST 025.082.311.001
ARI Job: TD49

Dear Jeremy:

Please find enclosed the Chain of Custody (COC) record, sample receipt documentation, and analytical results for the above referenced project. Analytical Resources, Inc. (ARI) accepted one soil sample in good condition on July 8, 2011. One cooler was received with a temperature of 12.4°C.

The sample was analyzed for PCBs, NWTPH-Dx, Total Metals and NWTPH-Gx, as requested on the COC.

There were no irregularities with the sample.

Quality control analysis results are included for your review. Copies of the reports and all associated raw data will be kept on file electronically at ARI. If you have any questions or require additional information, please contact me at your convenience.

Sincerely,
ANALYTICAL RESOURCES, INC

Kelly Bottem
Client Services Manager
(206) 695-6211
kellyb@arilabs.com
www.arilabs.com

cc: Carl Bach, The Boeing Company, P.O. Box 3707, M/S 1W-12, Seattle, WA 98124-2207

4611 South 134th Place, Suite 100 • Tukwila WA 98168 • **206-695-6200** • **206-695-6201** fax

☐ Seattle/Edmonds (425) 778-0907
☐ Tacoma (253) 926-2493
☐ Spokane (509) 327-9737
☐ Portland (503) 542-1080
☐ _____

LANDAU ASSOCIATES

Chain-of-Custody Record

Date _____
Page ___ of _____

Project Name NBF
Project No. 025.082.311.001
Project Location/Event NBF - LTST - RR
Sampler's Name JMD
Project Contact JMD / Carl Beck
Send Results To JMD / Carl Beck / Anne H. / Joe K.

Turnaround Time
☐ Standard
☒ Accelerated 3-5 DAYS
☐ _____

Testing Parameters

Sample I.D.	Date	Time	Matrix	No. of Containers	PCBs	NWTPH-Gx	NWTPH-Dx	MTCA 5 Metals *
NBF-RRSS-A-070811	7/8/11	0958	S	2				

Observations/Comments

X Allow water samples to settle, collect aliquot from clear portion NA JMD

~~X NWTPH-Dx - run acid wash/silica gel cleanup~~
No cleanup required JMD

___ run samples standardized to _____ product

___ Analyze for EPH if no specific product identified

VOC/BTEX/VPH (soil):
___ non-preserved
___ preserved w/methanol
___ preserved w/sodium bisulfate
___ Freeze upon receipt

___ Dissolved metal water samples field filtered

Other * As, Cd, Cr, Hg, Pb

Special Shipment/Handling or Storage Requirements

Method of Shipment Drop off @ ARI

Relinquished by	Received by	Relinquished by	Received by
Signature [signature]	Signature [signature]	Signature	Signature
Printed Name SERIM DAVIS	Printed Name Jennifer Millsap	Printed Name	Printed Name
Company LAI	Company ARI	Company	Company
Date 7/8/11 Time 1050	Date 7/8/11 Time 1050	Date ___ Time	Date ___ Time

WHITE COPY - Project File YELLOW COPY - Laboratory PINK COPY - Client Representative

Rev 8/09

Analytical Resources, Incorporated
Analytical Chemists and Consultants

Cooler Receipt Form

ARI Client: Boeing
COC No(s): _____ (NA)
Assigned ARI Job No: TD49

Project Name: NBF
Delivered by: Fed-Ex UPS Courier Hand Delivered Other: _____
Tracking No: _____ (NA)

Preliminary Examination Phase:

Were intact, properly signed and dated custody seals attached to the outside of to cooler? YES ~~NO~~ JM
Were custody papers included with the cooler? ..... YES NO
Were custody papers properly filled out (ink, signed, etc.) ..... YES NO
Temperature of Cooler(s) (°C) (recommended 2.0-6.0 °C for chemistry)..... 12.4
If cooler temperature is out of compliance fill out form 00070F Temp Gun ID#: 70941619

Cooler Accepted by: JM Date: 7/8/11 Time: 1050

Complete custody forms and attach all shipping documents

Log-In Phase:

Was a temperature blank included in the cooler? ..... YES NO
What kind of packing material was used? ... Bubble Wrap Wet Ice Gel Packs Baggies Foam Block Paper Other: _____
Was sufficient ice used (if appropriate)? ..... NA YES NO
Were all bottles sealed in individual plastic bags? ..... YES NO
Did all bottles arrive in good condition (unbroken)? ..... YES NO
Were all bottle labels complete and legible? ..... YES NO
Did the number of containers listed on COC match with the number of containers received? ..... YES NO
Did all bottle labels and tags agree with custody papers? ..... YES NO
Were all bottles used correct for the requested analyses? ..... YES NO
Do any of the analyses (bottles) require preservation? (attach preservation sheet, excluding VOCs)... NA YES NO
Were all VOC vials free of air bubbles? ..... NA YES NO
Was sufficient amount of sample sent in each bottle? ..... YES NO
Date VOC Trip Blank was made at ARI..... NA _____
Was Sample Split by ARI : NA YES Date/Time: _____ Equipment: _____ Split by: _____

Samples Logged by: TS Date: 7-8-11 Time: 1100

***** Notify Project Manager of discrepancies or concerns *****

Sample ID on Bottle	Sample ID on COC	Sample ID on Bottle	Sample ID on COC

Additional Notes, Discrepancies, & Resolutions:

By: Date:

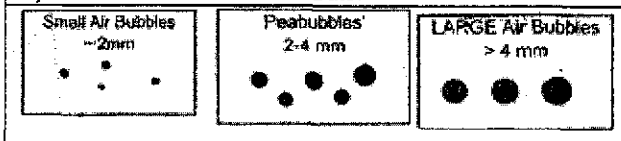

Small → "sm"
Peabubbles → "pb"
Large → "lg"
Headspace → "hs"

Analytical Resources, Incorporated
Analytical Chemists and Consultants

Cooler Temperature Compliance Form

Cooler#: 1 Temperature(°C): 12.4

Sample ID	Bottle Count	Bottle Type
All samples out of temp compliance		

not sampled 7/12/11 KD.

Cooler#: Temperature(°C):

Sample ID	Bottle Count	Bottle Type

Cooler#: Temperature(°C):

Sample ID	Bottle Count	Bottle Type

Cooler#: Temperature(°C):

Sample ID	Bottle Count	Bottle Type

Completed by: TS Date: 7-8-11 Time: 11:00

Sample ID Cross Reference Report

ANALYTICAL RESOURCES INCORPORATED

ARI Job No: TD49
Client: The Boeing Company
Project Event: NBF-LTST-RR
Project Name: NBF

	Sample ID	ARI Lab ID	ARI LIMS ID	Matrix	Sample Date/Time	VTSR
1.	NBF-RRSS-A-070811	TD49A	11-14750	Soil	07/08/11 09:58	07/08/11 10:30

Printed 07/08/11

ANALYTICAL RESOURCES INCORPORATED

ORGANICS ANALYSIS DATA SHEET
PCB by GC/ECD Method SW8082

Sample ID: NBF-RRSS-A-070811
SAMPLE

Lab Sample ID: TD49A
LIMS ID: 11-14750
Matrix: Soil
Data Release Authorized: VTB
Reported: 07/11/11

QC Report No: TD49-The Boeing Company
Project: NBF
NBF-LTST-RR
Date Sampled: 07/08/11
Date Received: 07/08/11

Date Extracted: 07/08/11
Date Analyzed: 07/09/11 17:27
Instrument/Analyst: ECD5/AAR
GPC Cleanup: No
Sulfur Cleanup: Yes
Acid Cleanup: Yes
Florisil Cleanup: No

Sample Amount: 13.0 g-dry-wt
Final Extract Volume: 4.00 mL
Dilution Factor: 5.00
Silica Gel: No

Percent Moisture: 15.0%

CAS Number	Analyte	RL	Result
12674-11-2	Aroclor 1016	31	< 31 U
53469-21-9	Aroclor 1242	31	< 31 U
12672-29-6	**Aroclor 1248**	**31**	**44**
11097-69-1	**Aroclor 1254**	**31**	**54**
11096-82-5	Aroclor 1260	31	< 31 U
11104-28-2	Aroclor 1221	31	< 31 U
11141-16-5	Aroclor 1232	31	< 31 U

Reported in µg/kg (ppb)

PCB Surrogate Recovery

Decachlorobiphenyl	96.2%
Tetrachlorometaxylene	101%

ANALYTICAL RESOURCES INCORPORATED

ORGANICS ANALYSIS DATA SHEET
PCB by GC/ECD Method SW8082

Sample ID: MB-070811
METHOD BLANK

Lab Sample ID: MB-070811
LIMS ID: 11-14750
Matrix: Soil
Data Release Authorized: VJB
Reported: 07/11/11

QC Report No: TD49-The Boeing Company
Project: NBF
NBF-LTST-RR
Date Sampled: NA
Date Received: NA

Date Extracted: 07/08/11
Date Analyzed: 07/09/11 16:30
Instrument/Analyst: ECD5/AAR
GPC Cleanup: No
Sulfur Cleanup: Yes
Acid Cleanup: Yes
Florisil Cleanup: No

Sample Amount: 12.0 g
Final Extract Volume: 4.00 mL
Dilution Factor: 5.00
Silica Gel: No

Percent Moisture: NA

CAS Number	Analyte	RL	Result
12674-11-2	Aroclor 1016	33	< 33 U
53469-21-9	Aroclor 1242	33	< 33 U
12672-29-6	Aroclor 1248	33	< 33 U
11097-69-1	Aroclor 1254	33	< 33 U
11096-82-5	Aroclor 1260	33	< 33 U
11104-28-2	Aroclor 1221	33	< 33 U
11141-16-5	Aroclor 1232	33	< 33 U

Reported in µg/kg (ppb)

PCB Surrogate Recovery

Decachlorobiphenyl	112%
Tetrachlorometaxylene	101%

ANALYTICAL RESOURCES INCORPORATED

SW8082/PCB SOIL/SEDIMENT SURROGATE RECOVERY SUMMARY

Matrix: Soil

QC Report No: TD49-The Boeing Company
Project: NBF
NBF-LTST-RR

Client ID	DCBP % REC	DCBP LCL-UCL	TCMX % REC	TCMX LCL-UCL	TOT OUT
MB-070811	112%	51-112	101%	46-111	0
LCS-070811	101%	51-112	94.5%	46-111	0
LCSD-070811	102%	51-112	95.6%	46-111	0
NBF-RRSS-A-070811	96.2%	42-127	101%	50-114	0

Microwave (MARS) Control Limits
Prep Method: SW3546
Log Number Range: 11-14750 to 11-14750

FORM-II SW8082

ANALYTICAL RESOURCES INCORPORATED

ORGANICS ANALYSIS DATA SHEET
PCB by GC/ECD Method SW8082

Sample ID: LCS-070811
LCS/LCSD

Lab Sample ID: LCS-070811
LIMS ID: 11-14750
Matrix: Soil
Data Release Authorized: VB
Reported: 07/11/11

QC Report No: TD49-The Boeing Company
Project: NBF
NBF-LTST-RR
Date Sampled: NA
Date Received: NA

Date Extracted LCS/LCSD: 07/08/11

Date Analyzed LCS: 07/09/11 16:49
LCSD: 07/09/11 17:08
Instrument/Analyst LCS: ECD5/AAR
LCSD: ECD5/AAR
GPC Cleanup: No
Sulfur Cleanup: Yes
Acid Cleanup: Yes
Florisil Cleanup: No

Sample Amount LCS: 12.0 g-dry-wt
LCSD: 12.0 g-dry-wt
Final Extract Volume LCS: 4.00 mL
LCSD: 4.00 mL
Dilution Factor LCS: 5.00
LCSD: 5.00
Silica Gel: No

Percent Moisture: NA

Analyte	LCS	Spike Added-LCS	LCS Recovery	LCSD	Spike Added-LCSD	LCSD Recovery	RPD
Aroclor 1016	170	167	102%	170	167	102%	0.0%
Aroclor 1260	181	167	108%	183	167	110%	1.1%

PCB Surrogate Recovery

	LCS	LCSD
Decachlorobiphenyl	101%	102%
Tetrachlorometaxylene	94.5%	95.6%

Results reported in µg/kg (ppb)
RPD calculated using sample concentrations per SW846.

ANALYTICAL RESOURCES INCORPORATED

ORGANICS ANALYSIS DATA SHEET
TPHG by Method NWTPHG
Matrix: Soil

Data Release Authorized: VD
Reported: 07/11/11

QC Report No: TD49-The Boeing Company
Project: NBF
Event: NBF-LTST-RR
Date Sampled: 07/08/11
Date Received: 07/08/11

ARI ID	Client ID	Analysis Date	Basis	Range	Result
MB-071111	Method Blank	07/11/11	Dry	Gasoline	< 0.25 U
11-14750		PID1		HC ID	---
				Trifluorotoluene	93.3%
				Bromobenzene	94.3%
TD49A	NBF-RRSS-A-070811	07/11/11	Dry	Gasoline	< 7.1 U
11-14750		PID1		HC ID	---
				Trifluorotoluene	101%
				Bromobenzene	100%

Gasoline values reported in mg/kg (ppm)

Quantitation on total peaks in the gasoline range from Toluene to Naphthalene.

CAS: Indicates the presence of gasoline or weathered gasoline.
GRO: Positive result that does not match an identifiable gasoline pattern.

Results corrected for soil moisture content per Section 11.10.5 of EPA Method 8000C.

ANALYTICAL RESOURCES INCORPORATED

TPHG SOIL SURROGATE RECOVERY SUMMARY

ARI Job: TD49
Matrix: Soil

QC Report No: TD49-The Boeing Company
Project: NBF
Event: NBF-LTST-RR

Client ID	BFB	TFT	BBZ	TOT OUT
MB-071111	NA	93.3%	94.3%	0
LCS-071111	NA	106%	99.7%	0
LCSD-071111	NA	102%	98.9%	0
NBF-RRSS-A-070811	NA	101%	100%	0

	LCS/MB LIMITS	QC LIMITS
(BFB) = Bromofluorobenzene	(70-130)	(70-130)
(TFT) = Trifluorotoluene	(80-120)	(66-123)
(BBZ) = Bromobenzene	(80-120)	(62-130)

Log Number Range: 11-14750 to 11-14750

FORM II TPHG

ANALYTICAL RESOURCES INCORPORATED

ORGANICS ANALYSIS DATA SHEET
TPHG by Method NWTPHG

Sample ID: LCS-071111
LAB CONTROL SAMPLE

Lab Sample ID: LCS-071111
LIMS ID: 11-14750
Matrix: Soil
Data Release Authorized: VB
Reported: 07/11/11

QC Report No: TD49-The Boeing Company
Project: NBF
Event: NBF-LTST-RR
Date Sampled: NA
Date Received: NA

Date Analyzed LCS: 07/11/11 05:42
LCSD: 07/11/11 06:11
Instrument/Analyst LCS: PID1/MH
LCSD: PID1/MH

Purge Volume: 5.0 mL

Sample Amount LCS: 100 mg-dry-wt
LCSD: 100 mg-dry-wt

Analyte	LCS	Spike Added-LCS	LCS Recovery	LCSD	Spike Added-LCSD	LCSD Recovery	RPD
Gasoline Range Hydrocarbons	53.4	50.0	107%	51.0	50.0	102%	4.6%

Reported in mg/kg (ppm)

RPD calculated using sample concentrations per SW846.

TPHG Surrogate Recovery

	LCS	LCSD
Trifluorotoluene	106%	102%
Bromobenzene	99.7%	98.9%

ANALYTICAL RESOURCES INCORPORATED

ORGANICS ANALYSIS DATA SHEET
TOTAL DIESEL RANGE HYDROCARBONS
NWTPHD by GC/FID
Page 1 of 1
Matrix: Soil

QC Report No: TD49-The Boeing Company
Project: NBF
NBF-LTST-RR
Date Received: 07/08/11

Data Release Authorized: VB
Reported: 07/11/11

ARI ID	Sample ID	Extraction Date	Analysis Date	EFV DL	Range	RL	Result
MB-070811	Method Blank	07/08/11	07/08/11	1.00	Diesel	5.0	< 5.0 U
11-14750	HC ID: ---		FID9	1.0	Motor Oil	10	< 10 U
					o-Terphenyl		101%
TD49A	NBF-RRSS-A-070811	07/08/11	07/08/11	1.00	**Diesel**	**5.8**	**18**
11-14750	HC ID: **DIESEL/MOTOR OIL**		FID9	1.0	**Motor Oil**	**12**	**56**
					o-Terphenyl		97.9%

Reported in mg/kg (ppm)

EFV-Effective Final Volume in mL.
DL-Dilution of extract prior to analysis.
RL-Reporting limit.

Diesel quantitation on total peaks in the range from C12 to C24.
Motor Oil quantitation on total peaks in the range from C24 to C38.
HC ID: DRO/RRO indicates results of organics or additional hydrocarbons in ranges are not identifiable.

ANALYTICAL RESOURCES INCORPORATED

TPHD SURROGATE RECOVERY SUMMARY

Matrix: Soil

QC Report No: TD49-The Boeing Company
Project: NBF
NBF-LTST-RR

Client ID	OTER	TOT OUT
070811MBS	101%	0
070811LCS	101%	0
070811LCSD	103%	0
NBF-RRSS-A-070811	97.9%	0

	LCS/MB LIMITS	QC LIMITS
(OTER) = o-Terphenyl	(50-150)	(50-150)

Prep Method: SW3546
Log Number Range: 11-14750 to 11-14750

FORM-II TPHD

ANALYTICAL RESOURCES INCORPORATED

ORGANICS ANALYSIS DATA SHEET
NWTPHD by GC/FID

Sample ID: LCS-070811
LCS/LCSD

Lab Sample ID: LCS-070811
LIMS ID: 11-14750
Matrix: Soil
Data Release Authorized: VJB
Reported: 07/11/11

QC Report No: TD49-The Boeing Company
Project: NBF
NBF-LTST-RR
Date Sampled: NA
Date Received: NA

Date Extracted LCS/LCSD: 07/08/11

Date Analyzed LCS: 07/08/11 19:40
LCSD: 07/08/11 20:02
Instrument/Analyst LCS: FID9/MS
LCSD: FID9/MS

Sample Amount LCS: 10.0 g-dry-wt
LCSD: 10.0 g-dry-wt
Final Extract Volume LCS: 1.0 mL
LCSD: 1.0 mL
Dilution Factor LCS: 1.00
LCSD: 1.00

Range	LCS	Spike Added-LCS	LCS Recovery	LCSD	Spike Added-LCSD	LCSD Recovery	RPD
Diesel	131	150	87.3%	136	150	90.7%	3.7%

TPHD Surrogate Recovery

	LCS	LCSD
o-Terphenyl	101%	103%

Results reported in mg/kg
RPD calculated using sample concentrations per SW846.

ANALYTICAL RESOURCES INCORPORATED

TOTAL DIESEL RANGE HYDROCARBONS-EXTRACTION REPORT

ARI Job: TD49
Project: NBF
NBF-LTST-RR

Matrix: Soil
Date Received: 07/08/11

ARI ID	Client ID	Client Amt	Final Vol	Basis	Prep Date
11-14750-070811MB1	Method Blank	10.0 g	1.00 mL	-	07/08/11
11-14750-070811LCS1	Lab Control	10.0 g	1.00 mL	-	07/08/11
11-14750-070811LCSD1	Lab Control Dup	10.0 g	1.00 mL	-	07/08/11
11-14750-TD49A	NBF-RRSS-A-070811	8.62 g	1.00 mL	D	07/08/11

Basis: D=Dry Weight W=As Received

ANALYTICAL RESOURCES INCORPORATED

INORGANICS ANALYSIS DATA SHEET
TOTAL METALS

Sample ID: NBF-RRSS-A-070811
SAMPLE

Lab Sample ID: TD49A
LIMS ID: 11-14750
Matrix: Soil
Data Release Authorized:
Reported: 07/12/11

QC Report No: TD49-The Boeing Company
Project: NBF
NBF-LTST-RR
Date Sampled: 07/08/11
Date Received: 07/08/11

Percent Total Solids: 86.4%

Prep Meth	Prep Date	Analysis Method	Analysis Date	CAS Number	Analyte	RL	mg/kg-dry	Q
3050B	07/08/11	6010B	07/11/11	7440-38-2	Arsenic	6	6	U
3050B	07/08/11	6010B	07/11/11	7440-43-9	Cadmium	0.2	0.2	U
3050B	07/08/11	6010B	07/11/11	**7440-47-3**	**Chromium**	0.6	**12.7**	
3050B	07/08/11	6010B	07/11/11	**7439-92-1**	**Lead**	2	**6**	
CLP	07/08/11	7471A	07/11/11	**7439-97-6**	**Mercury**	0.02	**0.04**	

U-Analyte undetected at given RL
RL-Reporting Limit

ANALYTICAL RESOURCES INCORPORATED

INORGANICS ANALYSIS DATA SHEET
TOTAL METALS

Sample ID: METHOD BLANK

Lab Sample ID: TD49MB
LIMS ID: 11-14750
Matrix: Soil
Data Release Authorized:
Reported: 07/12/11

QC Report No: TD49-The Boeing Company
Project: NBF
NBF-LTST-RR
Date Sampled: NA
Date Received: NA

Percent Total Solids: NA

Prep Meth	Prep Date	Analysis Method	Analysis Date	CAS Number	Analyte	RL	mg/kg-dry	Q
3050B	07/08/11	6010B	07/11/11	7440-38-2	Arsenic	5	5	U
3050B	07/08/11	6010B	07/11/11	7440-43-9	Cadmium	0.2	0.2	U
3050B	07/08/11	6010B	07/11/11	7440-47-3	Chromium	0.5	0.5	U
3050B	07/08/11	6010B	07/11/11	7439-92-1	Lead	2	2	U
CLP	07/08/11	7471A	07/11/11	7439-97-6	Mercury	0.02	0.02	U

U-Analyte undetected at given RL
RL-Reporting Limit

ANALYTICAL RESOURCES INCORPORATED

INORGANICS ANALYSIS DATA SHEET
TOTAL METALS

Sample ID: LAB CONTROL

Lab Sample ID: TD49LCS
LIMS ID: 11-14750
Matrix: Soil
Data Release Authorized:
Reported: 07/12/11

QC Report No: TD49-The Boeing Company
Project: NBF
NBF-LTST-RR
Date Sampled: NA
Date Received: NA

BLANK SPIKE QUALITY CONTROL REPORT

Analyte	Analysis Method	Spike Found	Spike Added	% Recovery	Q
Arsenic	6010B	198	200	99.0%	
Cadmium	6010B	52.5	50.0	105%	
Chromium	6010B	53.8	50.0	108%	
Lead	6010B	193	200	96.5%	
Mercury	7471A	0.53	0.50	106%	

Reported in mg/kg-dry

N-Control limit not met
NA-Not Applicable, Analyte Not Spiked
Control Limits: 80-120%

Analytical Resources, Incorporated
Analytical Chemists and Consultants

July 19, 2011

Jeremy Davis
Landau Associates, Inc.
130 Second Ave
Edmonds, WA 98020

RE: Project: NBF – LTST 025.082.311.001
ARI Job: TE14

Dear Jeremy:

Please find enclosed the Chain of Custody (COC) record, sample receipt documentation, and analytical results for the above referenced project. Analytical Resources, Inc. (ARI) accepted one soil sample in good condition on July 14, 2011. One cooler was received with a temperature of 6.0°C.

The sample was analyzed for PCBs, NWTPH-Dx, NWTPH-Gx and Total Metals, as requested on the COC.

There were no irregularities with the samples.

Quality control analysis results are included for your review. Copies of the reports and all associated raw data will be kept on file electronically at ARI. If you have any questions or require additional information, please contact me at your convenience.

Sincerely,
ANALYTICAL RESOURCES, INC

Kelly Bottem
Client Services Manager
(206) 695-6211
kellyb@arilabs.com
www.arilabs.com

cc: Carl Bach, The Boeing Company, P.O. Box 3707, M/S 1W-12, Seattle, WA 98124-2207

4611 South 134th Place, Suite 100 • Tukwila WA 98168 • **206-695-6200** • **206-695-6201** fax

☒ Seattle/Edmonds (425) 778-0907
☐ Tacoma (253) 926-2493
☐ Spokane (509) 327-9737
☐ Portland (503) 542-1080
☐ _____

LANDAU ASSOCIATES

TE14

Date 7-14-11
Page 1 of 1

Chain-of-Custody Record

Project Name NBF
Project No. 025.082.311.001
Project Location/Event NBF - LTST - RR
Sampler's Name LKM
Project Contact JMD / Carl Bach
Send Results To JMD / Carl Bach / Anne H. / Joe K.

Turnaround Time
☐ Standard
☒ Accelerated 3-5 days
☐ _____

Testing Parameters

Sample I.D.	Date	Time	Matrix	No. of Containers	PCBs	NWTPH-Gx	NWTPH-Dx	MTCA 5 Metals ☆
NBF-RRSS-A-071411	7/14/11	1440	Soil	2	X	X	X	X

Observations/Comments

X Allow water samples to settle, collect aliquot from clear portion N/A LKM

~~X NWTPH-Dx - run acid wash/silica gel clean up~~
No clean up required LKM

___ run samples standardized to _____ product

___ Analyze for EPH if no specific product identified

VOC/BTEX/VPH (soil):
___ non-preserved
___ preserved w/methanol
___ preserved w/sodium bisulfate
___ Freeze upon receipt

___ Dissolved metal water samples field filtered

Other ☆ As, Cd, Cr, Ag, Pb
HG 7/18/11

Special Shipment/Handling or Storage Requirements Cooler with ice

Method of Shipment Dop off @ ARI

Relinquished by	Received by	Relinquished by	Received by
Signature: Lauren McIntire	Signature: Nahele Bailey	Signature	Signature
Printed Name: Lauren McIntire	Printed Name: Nahele Bailey	Printed Name	Printed Name
Company: Landau Associates, Inc	Company: ARI	Company	Company
Date 7-14-11 Time 4:32	Date 7/14/2011 Time 16:32	Date Time	Date Time

WHITE COPY - Project File YELLOW COPY - Laboratory PINK COPY - Client Representative

Rev 8/09

Analytical Resources, Incorporated
Analytical Chemists and Consultants

Cooler Receipt Form

ARI Client: Landau

COC No(s): _____ (NA)

Assigned ARI Job No TE14

Project Name: NBF

Delivered by: Fed-Ex UPS Courier Hand Delivered Other: _____

Tracking No: _____ (NA)

Preliminary Examination Phase:

Were intact, properly signed and dated custody seals attached to the outside of to cooler?	YES	(NO)
Were custody papers included with the cooler?	(YES)	NO
Were custody papers properly filled out (ink, signed, etc)	(YES)	NO

Temperature of Cooler(s) (°C) (recommended 2.0-6.0 °C for chemistry) ... ~~2.0~~ NJB 6.0 ___ ___ ___ ___

If cooler temperature is out of compliance fill out form 00070F

Temp Gun ID#: 90941619

Cooler Accepted by: Nichole Bailey Date: 7/14/2011 Time: 16:32

Complete custody forms and attach all shipping documents

Log-In Phase:

Was a temperature blank included in the cooler?		YES	(NO)
What kind of packing material was used? ... Bubble Wrap (Wet Ice) Gel Packs (Baggies) Foam Block Paper Other: _____			
Was sufficient ice used (if appropriate)?	NA	(YES)	NO
Were all bottles sealed in individual plastic bags?		(YES)	NO
Did all bottles arrive in good condition (unbroken)?		(YES)	NO
Were all bottle labels complete and legible?		(YES)	NO
Did the number of containers listed on COC match with the number of containers received?		(YES)	NO
Did all bottle labels and tags agree with custody papers?		(YES)	NO
Were all bottles used correct for the requested analyses?		(YES)	NO
Do any of the analyses (bottles) require preservation? (attach preservation sheet, excluding VOCs)...	(NA)	YES	NO
Were all VOC vials free of air bubbles?	(NA)	YES	NO
Was sufficient amount of sample sent in each bottle?		(YES)	NO
Date VOC Trip Blank was made at ARI	(NA)	_____	

Was Sample Split by ARI : (NA) YES Date/Time: _____ Equipment: _____ Split by: _____

Samples Logged by: AV Date: 7/14/11 Time: 1740

***** Notify Project Manager of discrepancies or concerns *****

Sample ID on Bottle	Sample ID on COC	Sample ID on Bottle	Sample ID on COC

Additional Notes, Discrepancies, & Resolutions:

By: Date:

Small Air Bubbles ~2mm	Peabubbles 2-4 mm	LARGE Air Bubbles > 4 mm
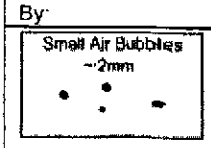		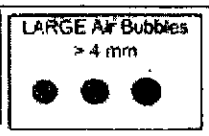

Small → "sm"
Peabubbles → "pb"
Large → "lg"
Headspace → "hs"

Sample ID Cross Reference Report

ANALYTICAL RESOURCES INCORPORATED

ARI Job No: TE14
Client: The Boeing Company
Project Event: 025.082.311.001
Project Name: NBF

	Sample ID	ARI Lab ID	ARI LIMS ID	Matrix	Sample Date/Time	VTSR
1.	NBF-RRSS-A-071411	TE14A	11-15156	Soil	07/14/11 14:40	07/14/11 16:32

Printed 07/14/11

ANALYTICAL RESOURCES INCORPORATED

ORGANICS ANALYSIS DATA SHEET
TPHG by Method NWTPHG
Matrix: Soil

Data Release Authorized: MW
Reported: 07/19/11

QC Report No: TE14-The Boeing Company
Project: NBF
Event: 025.082.311.001
Date Sampled: 07/14/11
Date Received: 07/14/11

ARI ID	Client ID	Analysis Date	Basis	Range	Result
MB-071911	Method Blank	07/19/11	Dry	Gasoline	< 5.0 U
11-15156		PID3		HC ID	---
				Trifluorotoluene	98.4%
				Bromobenzene	99.0%
TE14A	NBF-RRSS-A-071411	07/19/11	Dry	**Gasoline**	**12**
11-15156		PID3		HC ID	GRO
				Trifluorotoluene	90.8%
				Bromobenzene	91.3%

Gasoline values reported in mg/kg (ppm)

Quantitation on total peaks in the gasoline range from Toluene to Naphthalene.

GAS: Indicates the presence of gasoline or weathered gasoline.
GRO: Positive result that does not match an identifiable gasoline pattern.

Results corrected for soil moisture content per Section 11.10.5 of EPA Method 8000C.

ANALYTICAL RESOURCES INCORPORATED

TPHG SOIL SURROGATE RECOVERY SUMMARY

ARI Job: TE14
Matrix: Soil

QC Report No: TE14-The Boeing Company
Project: NBF
Event: 025.082.311.001

Client ID	BFB	TFT	BBZ	TOT OUT
MB-071911	NA	98.4%	99.0%	0
LCS-071911	NA	98.7%	97.4%	0
LCSD-071911	NA	109%	109%	0
NBF-RRSS-A-071411	NA	90.8%	91.3%	0

	LCS/MB LIMITS	QC LIMITS
(BFB) = Bromofluorobenzene	(70-130)	(70-130)
(TFT) = Trifluorotoluene	(80-120)	(66-123)
(BBZ) = Bromobenzene	(80-120)	(62-130)

Log Number Range: 11-15156 to 11-15156

FORM II TPHG

ANALYTICAL RESOURCES INCORPORATED

ORGANICS ANALYSIS DATA SHEET
TPHG by Method NWTPHG

Sample ID: LCS-071911
LAB CONTROL SAMPLE

Lab Sample ID: LCS-071911
LIMS ID: 11-15156
Matrix: Soil
Data Release Authorized: MW
Reported: 07/19/11

QC Report No: TE14-The Boeing Company
Project: NBF
Event: 025.082.311.001
Date Sampled: NA
Date Received: NA

Date Analyzed LCS: 07/19/11 06:27
LCSD: 07/19/11 06:53
Instrument/Analyst LCS: PID3/MH
LCSD: PID3/MH

Purge Volume: 5.0 mL

Sample Amount LCS: 100 mg-dry-wt
LCSD: 100 mg-dry-wt

Analyte	LCS	Spike Added-LCS	LCS Recovery	LCSD	Spike Added-LCSD	LCSD Recovery	RPD
Gasoline Range Hydrocarbons	47.9	50.0	95.8%	50.6	50.0	101%	5.5%

Reported in mg/kg (ppm)

RPD calculated using sample concentrations per SW846.

TPHG Surrogate Recovery

	LCS	LCSD
Trifluorotoluene	98.7%	109%
Bromobenzene	97.4%	109%

ANALYTICAL RESOURCES INCORPORATED

ORGANICS ANALYSIS DATA SHEET
PCB by GC/ECD Method SW8082

Sample ID: NBF-RRSS-A-071411
SAMPLE

Lab Sample ID: TE14A
LIMS ID: 11-15156
Matrix: Soil
Data Release Authorized: VD
Reported: 07/18/11

QC Report No: TE14-The Boeing Company
Project: NBF
025.082.311.001
Date Sampled: 07/14/11
Date Received: 07/14/11

Date Extracted: 07/15/11
Date Analyzed: 07/16/11 21:15
Instrument/Analyst: ECD7/JGR
GPC Cleanup: No
Sulfur Cleanup: Yes
Acid Cleanup: Yes
Florisil Cleanup: No

Sample Amount: 12.2 g-dry-wt
Final Extract Volume: 4.00 mL
Dilution Factor: 1.00
Silica Gel: No

Percent Moisture: 13.4%

CAS Number	Analyte	RL	Result
12674-11-2	Aroclor 1016	33	< 33 U
53469-21-9	Aroclor 1242	33	< 33 U
12672-29-6	Aroclor 1248	33	< 33 U
11097-69-1	Aroclor 1254	33	< 33 U
11096-82-5	Aroclor 1260	33	< 33 U
11104-28-2	Aroclor 1221	33	< 33 U
11141-16-5	Aroclor 1232	33	< 33 U

Reported in µg/kg (ppb)

PCB Surrogate Recovery

Decachlorobiphenyl	68.8%
Tetrachlorometaxylene	79.0%

ANALYTICAL RESOURCES INCORPORATED

ORGANICS ANALYSIS DATA SHEET
PCB by GC/ECD Method SW8082

Sample ID: MB-071511
METHOD BLANK

Lab Sample ID: MB-071511
LIMS ID: 11-15156
Matrix: Soil
Data Release Authorized: VB
Reported: 07/18/11

QC Report No: TE14-The Boeing Company
Project: NBF
025.082.311.001
Date Sampled: NA
Date Received: NA

Date Extracted: 07/15/11
Date Analyzed: 07/16/11 20:30
Instrument/Analyst: ECD7/JGR
GPC Cleanup: No
Sulfur Cleanup: Yes
Acid Cleanup: Yes
Florisil Cleanup: No

Sample Amount: 12.0 g
Final Extract Volume: 4.00 mL
Dilution Factor: 1.00
Silica Gel: No

Percent Moisture: NA

CAS Number	Analyte	RL	Result
12674-11-2	Aroclor 1016	33	< 33 U
53469-21-9	Aroclor 1242	33	< 33 U
12672-29-6	Aroclor 1248	33	< 33 U
11097-69-1	Aroclor 1254	33	< 33 U
11096-82-5	Aroclor 1260	33	< 33 U
11104-28-2	Aroclor 1221	33	< 33 U
11141-16-5	Aroclor 1232	33	< 33 U

Reported in µg/kg (ppb)

PCB Surrogate Recovery

Decachlorobiphenyl	69.2%
Tetrachlorometaxylene	78.2%

ANALYTICAL RESOURCES INCORPORATED

SW8082/PCB SOIL/SEDIMENT SURROGATE RECOVERY SUMMARY

Matrix: Soil

QC Report No: TE14-The Boeing Company
Project: NBF
025.082.311.001

Client ID	DCBP % REC	DCBP LCL-UCL	TCMX % REC	TCMX LCL-UCL	TOT OUT
MB-071511	69.2%	51-112	78.2%	46-111	0
LCS-071511	73.2%	51-112	85.8%	46-111	0
NBF-RRSS-A-071411	68.8%	42-127	79.0%	50-114	0

Microwave (MARS) Control Limits
Prep Method: SW3546
Log Number Range: 11-15156 to 11-15156

FORM-II SW8082

ANALYTICAL RESOURCES INCORPORATED

ORGANICS ANALYSIS DATA SHEET
PCB by GC/ECD Method SW8082

Sample ID: LCS-071511
LAB CONTROL

Lab Sample ID: LCS-071511
LIMS ID: 11-15156
Matrix: Soil
Data Release Authorized: VB
Reported: 07/18/11

QC Report No: TE14-The Boeing Company
Project: NBF
025.082.311.001
Date Sampled: NA
Date Received: NA

Date Extracted: 07/15/11
Date Analyzed: 07/16/11 20:53
Instrument/Analyst: ECD7/JGR
GPC Cleanup: No
Sulfur Cleanup: Yes
Acid Cleanup: Yes
Florisil Cleanup: No

Sample Amount: 12.0 g-dry-wt
Final Extract Volume: 4.00 mL
Dilution Factor: 1.00
Silica Gel: No

Percent Moisture: NA

Analyte	Lab Control	Spike Added	Recovery
Aroclor 1016	129	167	77.2%
Aroclor 1260	118	167	70.7%

PCB Surrogate Recovery

Decachlorobiphenyl	73.2%
Tetrachlorometaxylene	85.8%

Results reported in µg/kg (ppb)

ANALYTICAL RESOURCES INCORPORATED

ORGANICS ANALYSIS DATA SHEET
TOTAL DIESEL RANGE HYDROCARBONS
NWTPHD by GC/FID
Page 1 of 1
Matrix: Soil

QC Report No: TE14-The Boeing Company
Project: NBF
025.082.311.001
Date Received: 07/14/11

Data Release Authorized: VI
Reported: 07/18/11

ARI ID	Sample ID	Extraction Date	Analysis Date	EFV DL	Range	RL	Result
MB-071511	Method Blank	07/15/11	07/16/11	1.00	Diesel	5.0	< 5.0 U
11-15156	HC ID: ---		FID9	1.0	Motor Oil	10	< 10 U
					o-Terphenyl		95.5%
TE14A	NBF-RRSS-A-071411	07/15/11	07/16/11	1.00	**Diesel**	**5.7**	**9.8**
11-15156	HC ID: **DIESEL/MOTOR OIL**		FID9	1.0	**Motor Oil**	**11**	**32**
					o-Terphenyl		92.6%

Reported in mg/kg (ppm)

EFV-Effective Final Volume in mL.
DL-Dilution of extract prior to analysis.
RL-Reporting limit.

Diesel quantitation on total peaks in the range from C12 to C24.
Motor Oil quantitation on total peaks in the range from C24 to C38.
HC ID: DRO/RRO indicates results of organics or additional hydrocarbons in ranges are not identifiable.

ANALYTICAL RESOURCES INCORPORATED

TPHD SURROGATE RECOVERY SUMMARY

Matrix: Soil

QC Report No: TE14-The Boeing Company
Project: NBF
025.082.311.001

Client ID	OTER	TOT OUT
071511MBS	95.5%	0
071511LCS	106%	0
NBF-RRSS-A-071411	92.6%	0

	LCS/MB LIMITS	QC LIMITS
(OTER) = o-Terphenyl	(50-150)	(50-150)

Prep Method: SW3546
Log Number Range: 11-15156 to 11-15156

FORM-II TPHD

ANALYTICAL RESOURCES INCORPORATED

ORGANICS ANALYSIS DATA SHEET
NWTPHD by GC/FID

Sample ID: LCS-071511
LAB CONTROL

Lab Sample ID: LCS-071511
LIMS ID: 11-15156
Matrix: Soil
Data Release Authorized: VD
Reported: 07/18/11

QC Report No: TE14-The Boeing Company
Project: NBF
025.082.311.001
Date Sampled: NA
Date Received: NA

Date Extracted: 07/15/11
Date Analyzed: 07/16/11 19:10
Instrument/Analyst: FID9/MH

Sample Amount: 10.0 g-dry-wt
Final Extract Volume: 1.0 mL
Dilution Factor: 1.00

Range	Lab Control	Spike Added	Recovery
Diesel	124	150	82.7%

TPHD Surrogate Recovery

o-Terphenyl	106%

Results reported in mg/kg

ANALYTICAL RESOURCES INCORPORATED

TOTAL DIESEL RANGE HYDROCARBONS-EXTRACTION REPORT

ARI Job: TE14
Project: NBF
025.082.311.001

Matrix: Soil
Date Received: 07/14/11

ARI ID	Client ID	Client Amt	Final Vol	Basis	Prep Date
11-15156-071511MB1	Method Blank	10.0 g	1.00 mL	-	07/15/11
11-15156-071511LCS1	Lab Control	10.0 g	1.00 mL	-	07/15/11
11-15156-TE14A	NBF-RRSS-A-071411	8.83 g	1.00 mL	D	07/15/11

Basis: D=Dry Weight W=As Received

Diesel Extraction Report

ANALYTICAL RESOURCES INCORPORATED

INORGANICS ANALYSIS DATA SHEET
TOTAL METALS

Sample ID: NBF-RRSS-A-071411
SAMPLE

Lab Sample ID: TE14A
LIMS ID: 11-15156
Matrix: Soil
Data Release Authorized:
Reported: 07/20/11

QC Report No: TE14-The Boeing Company
Project: NBF
025.082.311.001
Date Sampled: 07/14/11
Date Received: 07/14/11

Percent Total Solids: 86.2%

Prep Meth	Prep Date	Analysis Method	Analysis Date	CAS Number	Analyte	RL	mg/kg-dry	Q
3050B	07/15/11	6010B	07/18/11	**7440-38-2**	**Arsenic**	5	**6**	
3050B	07/15/11	6010B	07/18/11	7440-43-9	Cadmium	0.2	0.2	U
3050B	07/15/11	6010B	07/18/11	**7440-47-3**	**Chromium**	0.5	**11.9**	
3050B	07/15/11	6010B	07/18/11	**7439-92-1**	**Lead**	2	**12**	
CLP	07/18/11	7471A	07/19/11	7439-97-6	Mercury	0.02	0.02	U

U-Analyte undetected at given RL
RL-Reporting Limit

ANALYTICAL RESOURCES INCORPORATED

INORGANICS ANALYSIS DATA SHEET
TOTAL METALS

Sample ID: METHOD BLANK

Lab Sample ID: TE14MB
LIMS ID: 11-15156
Matrix: Soil
Data Release Authorized:
Reported: 07/20/11

Percent Total Solids: NA

QC Report No: TE14-The Boeing Company
Project: NBF
025.082.311.001
Date Sampled: NA
Date Received: NA

Prep Meth	Prep Date	Analysis Method	Analysis Date	CAS Number	Analyte	RL	mg/kg-dry	Q
3050B	07/15/11	6010B	07/18/11	7440-38-2	Arsenic	5	5	U
3050B	07/15/11	6010B	07/18/11	7440-43-9	Cadmium	0.2	0.2	U
3050B	07/15/11	6010B	07/18/11	7440-47-3	Chromium	0.5	0.5	U
3050B	07/15/11	6010B	07/18/11	7439-92-1	Lead	2	2	U
CLP	07/18/11	7471A	07/19/11	7439-97-6	Mercury	0.02	0.02	U

U-Analyte undetected at given RL
RL-Reporting Limit

ANALYTICAL RESOURCES INCORPORATED

INORGANICS ANALYSIS DATA SHEET
TOTAL METALS

Sample ID: LAB CONTROL

Lab Sample ID: TE14LCS
LIMS ID: 11-15156
Matrix: Soil
Data Release Authorized:
Reported: 07/20/11

QC Report No: TE14-The Boeing Company
Project: NBF
025.082.311.001
Date Sampled: NA
Date Received: NA

BLANK SPIKE QUALITY CONTROL REPORT

Analyte	Analysis Method	Spike Found	Spike Added	% Recovery	Q
Arsenic	6010B	197	200	98.5%	
Cadmium	6010B	50.8	50.0	102%	
Chromium	6010B	50.5	50.0	101%	
Lead	6010B	196	200	98.0%	
Mercury	7471A	0.53	0.50	106%	

Reported in mg/kg-dry

N-Control limit not met
NA-Not Applicable, Analyte Not Spiked
Control Limits: 80-120%

Analytical Resources, Incorporated
Analytical Chemists and Consultants

July 20, 2011

Jeremy Davis
Landau Associates, Inc.
130 Second Ave
Edmonds, WA 98020

RE: Project: NBF – LTST 025.082.311.001
ARI Job: TE31

Dear Jeremy:

Please find enclosed the Chain of Custody (COC) record, sample receipt documentation, and analytical results for the above referenced project. Analytical Resources, Inc. (ARI) accepted one soil sample in good condition on July 15, 2011. One cooler was received with a temperature of 5.9°C.

The sample was analyzed for PCBs, NWTPH-Dx, NWTPH-Gx and Total Metals, as requested on the COC.

There were no irregularities with the samples.

Quality control analysis results are included for your review. Copies of the reports and all associated raw data will be kept on file electronically at ARI. If you have any questions or require additional information, please contact me at your convenience.

Sincerely,
ANALYTICAL RESOURCES, INC

Kelly Bottem
Client Services Manager
(206) 695-6211
kellyb@arilabs.com
www.arilabs.com

cc: Carl Bach, The Boeing Company, P.O. Box 3707, M/S 1W-12, Seattle, WA 98124-2207

4611 South 134th Place, Suite 100 • Tukwila WA 98168 • **206-695-6200** • **206-695-6201** fax

LANDAU ASSOCIATES

☒ Seattle/Edmonds (425) 778-0907
☐ Tacoma (253) 926-2493
☐ Spokane (509) 327-9737
☐ Portland (503) 542-1080
☐ _____

TE31 11-15268

Date 7-15-11
Page 1 of 1

Chain-of-Custody Record

Project Name NBF
Project No. 25082-311.001
Project Location/Event NBF-LTST-RR
Sampler's Name Lauren McIntire (LKM)
Project Contact JMD/Carl Bach
Send Results To JMD/Carl Bach/Anne H./Jac K.

Turnaround Time
☐ Standard
☒ Accelerated 3-5 days
☐ _____

Testing Parameters

Sample I.D.	Date	Time	Matrix	No. of Containers	PCBs	NWTPH-Gx	NWTPH-Dx	MTCA 5 metals*								
NBF-RRSS-A-071511	7-15-11	1515	Soil	2	X	X	X	X								

Observations/Comments

X Allow water samples to settle, collect aliquot from clear portion N/A LKM

X ~~NWTPH-Dx - run acid wash/silica gel cleanup~~
No clean up required LKM

___ run samples standardized to _____ product

___ Analyze for EPH if no specific product identified

VOC/BTEX/VPH (soil):
___ non-preserved
___ preserved w/methanol
___ preserved w/sodium bisulfate
___ Freeze upon receipt

___ Dissolved metal water samples field filtered

Other *As, Cd, Cr, Ag, Pb

KD 7/18/11

Special Shipment/Handling or Storage Requirements Cooler w/ ice

Method of Shipment Dropoff @ ARI

Relinquished by	Received by	Relinquished by	Received by
Signature [signature]	Signature [signature]	Signature	Signature
Printed Name Lauren McIntire	Printed Name A. Volgardsen	Printed Name	Printed Name
Company Landau Associates, Inc.	Company ARI	Company	Company
Date 7-15-11 Time 1605	Date 7/15/11 Time 1605	Date _____ Time _____	Date _____ Time _____

WHITE COPY - Project File YELLOW COPY - Laboratory PINK COPY - Client Representative

Rev 8/09

Sample ID Cross Reference Report

ANALYTICAL RESOURCES INCORPORATED

ARI Job No: TE31
Client: The Boeing Company
Project Event: NBF-LTST-RR
Project Name: 25082.311.001

	Sample ID	ARI Lab ID	ARI LIMS ID	Matrix	Sample Date/Time	VTSR
1.	NBF-RRSS-A-071511	TE31A	11-15268	Soil	07/15/11 15:15	07/15/11 16:05

Printed 07/15/11

Analytical Resources, Incorporated
Analytical Chemists and Consultants

Cooler Receipt Form

ARI Client: Boeing

Project Name: _____

COC No(s): _____ NA

Delivered by: Fed-Ex UPS Courier Hand Delivered Other: _____

Assigned ARI Job No: _____

Tracking No: _____ NA

Preliminary Examination Phase:

Were intact, properly signed and dated custody seals attached to the outside of to cooler? YES NO

Were custody papers included with the cooler? YES NO

Were custody papers properly filled out (ink, signed, etc.) YES NO

Temperature of Cooler(s) (°C) (recommended 2.0-6.0 °C for chemistry) 5.9

If cooler temperature is out of compliance fill out form 00070F Temp Gun ID#: 91094161 9

Cooler Accepted by: AV Date: 7/15/11 Time: 1605

Complete custody forms and attach all shipping documents

Log-In Phase:

Was a temperature blank included in the cooler? YES NO

What kind of packing material was used? Bubble Wrap Wet Ice Gel Packs Baggies Foam Block Paper Other: _____

Was sufficient ice used (if appropriate)? NA YES NO

Were all bottles sealed in individual plastic bags? YES NO

Did all bottles arrive in good condition (unbroken)? YES NO

Were all bottle labels complete and legible? YES NO

Did the number of containers listed on COC match with the number of containers received? YES NO

Did all bottle labels and tags agree with custody papers? YES NO

Were all bottles used correct for the requested analyses? YES NO

Do any of the analyses (bottles) require preservation? (attach preservation sheet, excluding VOCs)... NA YES NO

Were all VOC vials free of air bubbles? NA YES NO

Was sufficient amount of sample sent in each bottle? YES NO

Date VOC Trip Blank was made at ARI NA _____

Was Sample Split by ARI : NA YES Date/Time: _____ Equipment: _____ Split by: _____

Samples Logged by: [signature] Date: 7/15/11 Time: 1640

***** Notify Project Manager of discrepancies or concerns *****

Sample ID on Bottle	Sample ID on COC	Sample ID on Bottle	Sample ID on COC

Additional Notes, Discrepancies, & Resolutions:

By: Date:

Small Air Bubbles ~2mm	Peabubbles 2-4 mm	LARGE Air Bubbles > 4 mm	
			Small → "sm"
			Peabubbles → "pb"
			Large → "lg"
			Headspace → "hs"

ANALYTICAL RESOURCES INCORPORATED

ORGANICS ANALYSIS DATA SHEET
PCB by GC/ECD Method SW8082

Sample ID: MB-071911
METHOD BLANK

Lab Sample ID: MB-071911
LIMS ID: 11-15268
Matrix: Soil
Data Release Authorized: VB
Reported: 07/20/11

QC Report No: TE31-The Boeing Company
Project: 25082.311.001
NBF-LTST-RR
Date Sampled: NA
Date Received: NA

Date Extracted: 07/19/11
Date Analyzed: 07/20/11 08:23
Instrument/Analyst: ECD7/JGR
GPC Cleanup: No
Sulfur Cleanup: Yes
Acid Cleanup: Yes
Florisil Cleanup: No

Sample Amount: 12.0 g
Final Extract Volume: 4.00 mL
Dilution Factor: 1.00
Silica Gel: No

Percent Moisture: NA

CAS Number	Analyte	RL	Result
12674-11-2	Aroclor 1016	33	< 33 U
53469-21-9	Aroclor 1242	33	< 33 U
12672-29-6	Aroclor 1248	33	< 33 U
11097-69-1	Aroclor 1254	33	< 33 U
11096-82-5	Aroclor 1260	33	< 33 U
11104-28-2	Aroclor 1221	33	< 33 U
11141-16-5	Aroclor 1232	33	< 33 U
37324-23-5	Aroclor 1262	33	< 33 U

Reported in µg/kg (ppb)

PCB Surrogate Recovery

Decachlorobiphenyl	93.2%
Tetrachlorometaxylene	86.0%

ANALYTICAL RESOURCES INCORPORATED

ORGANICS ANALYSIS DATA SHEET
PCB by GC/ECD Method SW8082

Sample ID: NBF-RRSS-A-071511
SAMPLE

Lab Sample ID: TE31A
LIMS ID: 11-15268
Matrix: Soil
Data Release Authorized: VB
Reported: 07/20/11

QC Report No: TE31-The Boeing Company
Project: 25082.311.001
NBF-LTST-RR
Date Sampled: 07/15/11
Date Received: 07/15/11

Date Extracted: 07/19/11
Date Analyzed: 07/20/11 08:00
Instrument/Analyst: ECD7/JGR
GPC Cleanup: No
Sulfur Cleanup: Yes
Acid Cleanup: Yes
Florisil Cleanup: No

Sample Amount: 12.7 g-dry-wt
Final Extract Volume: 4.00 mL
Dilution Factor: 1.00
Silica Gel: No

Percent Moisture: 9.7%

CAS Number	Analyte	RL	Result
12674-11-2	Aroclor 1016	32	< 32 U
53469-21-9	Aroclor 1242	32	< 32 U
12672-29-6	Aroclor 1248	32	< 32 U
11097-69-1	Aroclor 1254	32	< 32 U
11096-82-5	Aroclor 1260	32	< 32 U
11104-28-2	Aroclor 1221	32	< 32 U
11141-16-5	Aroclor 1232	32	< 32 U
37324-23-5	Aroclor 1262	32	< 32 U

Reported in µg/kg (ppb)

PCB Surrogate Recovery

Decachlorobiphenyl	74.5%
Tetrachlorometaxylene	70.0%

ANALYTICAL RESOURCES INCORPORATED

SW8082/PCB SOIL/SEDIMENT SURROGATE RECOVERY SUMMARY

Matrix: Soil

QC Report No: TE31-The Boeing Company
Project: 25082.311.001
NBF-LTST-RR

Client ID	DCBP % REC	DCBP LCL-UCL	TCMX % REC	TCMX LCL-UCL	TOT OUT
MB-071911	93.2%	51-112	86.0%	46-111	0
LCS-071911	89.8%	51-112	83.5%	46-111	0
LCSD-071911	91.5%	51-112	84.5%	46-111	0
NBF-RRSS-A-071511	74.5%	42-127	70.0%	50-114	0

Microwave (MARS) Control Limits
Prep Method: SW3546
Log Number Range: 11-15268 to 11-15268

FORM-II SW8082

ANALYTICAL RESOURCES INCORPORATED

ORGANICS ANALYSIS DATA SHEET
PCB by GC/ECD Method SW8082

Sample ID: LCS-071911
LCS/LCSD

Lab Sample ID: LCS-071911
LIMS ID: 11-15268
Matrix: Soil
Data Release Authorized: VB
Reported: 07/20/11

QC Report No: TE31-The Boeing Company
Project: 25082.311.001
NBF-LTST-RR
Date Sampled: NA
Date Received: NA

Date Extracted LCS/LCSD: 07/19/11

Date Analyzed LCS: 07/20/11 08:45
LCSD: 07/20/11 09:08
Instrument/Analyst LCS: ECD7/JGR
LCSD: ECD7/JGR
GPC Cleanup: No
Sulfur Cleanup: Yes
Acid Cleanup: Yes
Florisil Cleanup: No

Sample Amount LCS: 12.0 g-dry-wt
LCSD: 12.0 g-dry-wt
Final Extract Volume LCS: 4.00 mL
LCSD: 4.00 mL
Dilution Factor LCS: 1.00
LCSD: 1.00
Silica Gel: No

Percent Moisture: NA

Analyte	LCS	Spike Added-LCS	LCS Recovery	LCSD	Spike Added-LCSD	LCSD Recovery	RPD
Aroclor 1016	130	167	77.8%	132	167	79.0%	1.5%
Aroclor 1260	132	167	79.0%	135	167	80.8%	2.2%

PCB Surrogate Recovery

	LCS	LCSD
Decachlorobiphenyl	89.8%	91.5%
Tetrachlorometaxylene	83.5%	84.5%

Results reported in µg/kg (ppb)
RPD calculated using sample concentrations per SW846.

ANALYTICAL RESOURCES INCORPORATED

ORGANICS ANALYSIS DATA SHEET
TOTAL DIESEL RANGE HYDROCARBONS
NWTPHD by GC/FID
Page 1 of 1
Matrix: Soil

QC Report No: TE31-The Boeing Company
Project: 25082.311.001
NBF-LTST-RR
Date Received: 07/15/11

Data Release Authorized: VB
Reported: 07/19/11

ARI ID	Sample ID	Extraction Date	Analysis Date	EFV DL	Range	RL	Result
MB-071811	Method Blank	07/18/11	07/19/11	1.00	Diesel	5.0	< 5.0 U
11-15268	HC ID: ---		FID4A	1.0	Motor Oil	10	< 10 U
					o-Terphenyl		107%
TE31A	NBF-RRSS-A-071511	07/18/11	07/19/11	1.00	**Diesel**	**5.5**	**9.2**
11-15268	HC ID: **DRO/MOTOR OIL**		FID4A	1.0	**Motor Oil**	**11**	**38**
					o-Terphenyl		114%

Reported in mg/kg (ppm)

EFV-Effective Final Volume in mL.
DL-Dilution of extract prior to analysis.
RL-Reporting limit.

Diesel quantitation on total peaks in the range from C12 to C24.
Motor Oil quantitation on total peaks in the range from C24 to C38.
HC ID: DRO/RRO indicates results of organics or additional hydrocarbons in ranges are not identifiable.

ANALYTICAL RESOURCES INCORPORATED

TPHD SURROGATE RECOVERY SUMMARY

Matrix: Soil

QC Report No: TE31-The Boeing Company
Project: 25082.311.001
NBF-LTST-RR

Client ID	OTER	TOT OUT
071811MBS	107%	0
071811LCS	107%	0
071811LCSD	121%	0
NBF-RRSS-A-071511	114%	0

	LCS/MB LIMITS	QC LIMITS
(OTER) = o-Terphenyl	(50-150)	(50-150)

Prep Method: SW3510C
Log Number Range: 11-15268 to 11-15268

FORM-II TPHD

ANALYTICAL RESOURCES INCORPORATED

ORGANICS ANALYSIS DATA SHEET
NWTPHD by GC/FID

Sample ID: LCS-071811
LCS/LCSD

Lab Sample ID: LCS-071811
LIMS ID: 11-15268
Matrix: Soil
Data Release Authorized: VB
Reported: 07/19/11

QC Report No: TE31-The Boeing Company
Project: 25082.311.001
NBF-LTST-RR
Date Sampled: NA
Date Received: NA

Date Extracted LCS/LCSD: 07/18/11

Date Analyzed LCS: 07/19/11 10:02
LCSD: 07/19/11 10:25
Instrument/Analyst LCS: FID4A/MS
LCSD: FID4A/MS

Sample Amount LCS: 10.0 g-dry-wt
LCSD: 10.0 g-dry-wt
Final Extract Volume LCS: 1.0 mL
LCSD: 1.0 mL
Dilution Factor LCS: 1.00
LCSD: 1.00

Range	LCS	Spike Added-LCS	LCS Recovery	LCSD	Spike Added-LCSD	LCSD Recovery	RPD
Diesel	143	150	95.3%	153	150	102%	6.8%

TPHD Surrogate Recovery

	LCS	LCSD
o-Terphenyl	107%	121%

Results reported in mg/kg
RPD calculated using sample concentrations per SW846.

ANALYTICAL RESOURCES INCORPORATED

TOTAL DIESEL RANGE HYDROCARBONS-EXTRACTION REPORT

ARI Job: TE31
Project: 25082.311.001
NBF-LTST-RR

Matrix: Soil
Date Received: 07/15/11

ARI ID	Client ID	Client Amt	Final Vol	Basis	Prep Date
11-15268-071811MB1	Method Blank	10.0 g	1.00 mL	-	07/18/11
11-15268-071811LCS1	Lab Control	10.0 g	1.00 mL	-	07/18/11
11-15268-071811LCSD1	Lab Control Dup	10.0 g	1.00 mL	-	07/18/11
11-15268-TE31A	NBF-RRSS-A-071511	9.07 g	1.00 mL	D	07/18/11

Basis: D=Dry Weight W=As Received

Diesel Extraction Report

ANALYTICAL RESOURCES INCORPORATED

ORGANICS ANALYSIS DATA SHEET
TPHG by Method NWTPHG
Matrix: Soil

Data Release Authorized: VB
Reported: 07/20/11

QC Report No: TE31-The Boeing Company
Project: 25082.311.001
Event: NBF-LTST-RR
Date Sampled: 07/15/11
Date Received: 07/15/11

ARI ID	Client ID	Analysis Date	Basis	Range	Result
MB-071911	Method Blank	07/19/11	Dry	Gasoline	< 5.0 U
11-15268		PID3		HC ID	---
				Trifluorotoluene	98.4%
				Bromobenzene	99.0%
TE31A	NBF-RRSS-A-071511	07/19/11	Dry	Gasoline	< 6.4 U
11-15268		PID3		HC ID	---
				Trifluorotoluene	108%
				Bromobenzene	107%

Gasoline values reported in mg/kg (ppm)

Quantitation on total peaks in the gasoline range from Toluene to Naphthalene.

GAS: Indicates the presence of gasoline or weathered gasoline.
GRO: Positive result that does not match an identifiable gasoline pattern.

Results corrected for soil moisture content per Section 11.10.5 of EPA Method 8000C.

ANALYTICAL RESOURCES INCORPORATED

TPHG SOIL SURROGATE RECOVERY SUMMARY

ARI Job: TE31
Matrix: Soil

QC Report No: TE31-The Boeing Company
Project: 25082.311.001
Event: NBF-LTST-RR

Client ID	BFB	TFT	BBZ	TOT OUT
MB-071911	NA	98.4%	99.0%	0
LCS-071911	NA	98.7%	97.4%	0
LCSD-071911	NA	109%	109%	0
NBF-RRSS-A-071511	NA	108%	107%	0

	LCS/MB LIMITS	QC LIMITS
(BFB) = Bromofluorobenzene	(70-130)	(70-130)
(TFT) = Trifluorotoluene	(80-120)	(66-123)
(BBZ) = Bromobenzene	(80-120)	(62-130)

Log Number Range: 11-15268 to 11-15268

FORM II TPHG

ANALYTICAL RESOURCES INCORPORATED

ORGANICS ANALYSIS DATA SHEET
TPHG by Method NWTPHG

Sample ID: LCS-071911
LAB CONTROL SAMPLE

Lab Sample ID: LCS-071911
LIMS ID: 11-15268
Matrix: Soil
Data Release Authorized: VB
Reported: 07/20/11

QC Report No: TE31-The Boeing Company
Project: 25082.311.001
Event: NBF-LTST-RR
Date Sampled: NA
Date Received: NA

Date Analyzed LCS: 07/19/11 06:27
LCSD: 07/19/11 06:53
Instrument/Analyst LCS: PID3/MH
LCSD: PID3/MH

Purge Volume: 5.0 mL

Sample Amount LCS: 100 mg-dry-wt
LCSD: 100 mg-dry-wt

Analyte	LCS	Spike Added-LCS	LCS Recovery	LCSD	Spike Added-LCSD	LCSD Recovery	RPD
Gasoline Range Hydrocarbons	47.9	50.0	95.8%	50.6	50.0	101%	5.5%

Reported in mg/kg (ppm)

RPD calculated using sample concentrations per SW846.

TPHG Surrogate Recovery

	LCS	LCSD
Trifluorotoluene	98.7%	109%
Bromobenzene	97.4%	109%

ANALYTICAL RESOURCES INCORPORATED

INORGANICS ANALYSIS DATA SHEET
TOTAL METALS

Sample ID: NBF-RRSS-A-071511
SAMPLE

Lab Sample ID: TE31A
LIMS ID: 11-15268
Matrix: Soil
Data Release Authorized:
Reported: 07/20/11

QC Report No: TE31-The Boeing Company
Project: 25082.311.001
NBF-LTST-RR
Date Sampled: 07/15/11
Date Received: 07/15/11

Percent Total Solids: 90.2%

Prep Meth	Prep Date	Analysis Method	Analysis Date	CAS Number	Analyte	RL	mg/kg-dry	Q
3050B	07/19/11	6010B	07/20/11	7440-38-2	Arsenic	5	5	U
3050B	07/19/11	6010B	07/20/11	7440-43-9	Cadmium	0.2	0.2	U
3050B	07/19/11	6010B	07/20/11	**7440-47-3**	**Chromium**	0.5	**12.5**	
3050B	07/19/11	6010B	07/20/11	**7439-92-1**	**Lead**	2	**10**	
CLP	07/18/11	7471A	07/19/11	7439-97-6	Mercury	0.02	0.02	U

U-Analyte undetected at given RL
RL-Reporting Limit

ANALYTICAL RESOURCES INCORPORATED

INORGANICS ANALYSIS DATA SHEET
TOTAL METALS

Sample ID: METHOD BLANK

Lab Sample ID: TE31MB
LIMS ID: 11-15268
Matrix: Soil
Data Release Authorized:
Reported: 07/20/11

QC Report No: TE31-The Boeing Company
Project: 25082.311.001
NBF-LTST-RR
Date Sampled: NA
Date Received: NA

Percent Total Solids: NA

Prep Meth	Prep Date	Analysis Method	Analysis Date	CAS Number	Analyte	RL	mg/kg-dry	Q
3050B	07/19/11	6010B	07/20/11	7440-38-2	Arsenic	5	5	U
3050B	07/19/11	6010B	07/20/11	7440-43-9	Cadmium	0.2	0.2	U
3050B	07/19/11	6010B	07/20/11	7440-47-3	Chromium	0.5	0.5	U
3050B	07/19/11	6010B	07/20/11	7439-92-1	Lead	2	2	U
CLP	07/18/11	7471A	07/19/11	7439-97-6	Mercury	0.02	0.02	U

U-Analyte undetected at given RL
RL-Reporting Limit

ANALYTICAL RESOURCES INCORPORATED

INORGANICS ANALYSIS DATA SHEET
TOTAL METALS

Sample ID: LAB CONTROL

Lab Sample ID: TE31LCS
LIMS ID: 11-15268
Matrix: Soil
Data Release Authorized:
Reported: 07/20/11

QC Report No: TE31-The Boeing Company
Project: 25082.311.001
NBF-LTST-RR
Date Sampled: NA
Date Received: NA

BLANK SPIKE QUALITY CONTROL REPORT

Analyte	Analysis Method	Spike Found	Spike Added	% Recovery	Q
Arsenic	6010B	203	200	102%	
Cadmium	6010B	51.0	50.0	102%	
Chromium	6010B	52.3	50.0	105%	
Lead	6010B	198	200	99.0%	
Mercury	7471A	0.47	0.50	94.0%	

Reported in mg/kg-dry

N-Control limit not met
NA-Not Applicable, Analyte Not Spiked
Control Limits: 80-120%

Analytical Resources, Incorporated
Analytical Chemists and Consultants

July 25, 2011

Jeremy Davis
Landau Associates, Inc.
130 Second Ave
Edmonds, WA 98020

RE: Project: NBF – LTST 025.082.311.001
ARI Job: TE89

Dear Jeremy:

Please find enclosed the Chain of Custody (COC) record, sample receipt documentation, and analytical results for the above referenced project. Analytical Resources, Inc. (ARI) accepted one soil sample in good condition on July 20, 2011. One cooler was received with a temperature of 5.9°C.

The sample was analyzed for PCBs, NWTPH-Dx, NWTPH-Gx and Total Metals, as requested on the COC.

There were no irregularities with the sample.

Quality control analysis results are included for your review. Copies of the reports and all associated raw data will be kept on file electronically at ARI. If you have any questions or require additional information, please contact me at your convenience.

Sincerely,
ANALYTICAL RESOURCES, INC

Eric Branson
Project Manager
-for-
Kelly Bottem
Client Services Manager
(206) 695-6211
kellyb@arilabs.com
www.arilabs.com

cc: Carl Bach, The Boeing Company, P.O. Box 3707, M/S 1W-12, Seattle, WA 98124-2207

4611 South 134th Place, Suite 100 • Tukwila WA 98168 • **206-695-6200** • **206-695-6201** fax

Sample ID Cross Reference Report

ANALYTICAL RESOURCES INCORPORATED

ARI Job No: TE89
Client: The Boeing Company
Project Event: 025.082.311.001
Project Name: NBF-LTST-RR

	Sample ID	ARI Lab ID	ARI LIMS ID	Matrix	Sample Date/Time	VTSR
1.	NBF-RRSS-A-072011	TE89A	11-15493	Soil	07/20/11 13:15	07/20/11 14:44

Printed 07/20/11

TE89

LANDAU ASSOCIATES

☒ Seattle/Edmonds (425) 778-0907
☐ Tacoma (253) 926-2493
☐ Spokane (509) 327-9737
☐ Portland (503) 542-1080
☐ _____

Chain-of-Custody Record

Date 7/20/11
Page 1 of 1

Project Name NBF-LTST-RR Project No. 025.082.311.001
Project Location/Event NBF-LTST-RR
Sampler's Name SMD
Project Contact SMD / Carl Bach
Send Results To SMD / Carl Bach / Joe K

Turnaround Time
☐ Standard
☒ Accelerated
~~☒~~ 3 DAYS

Testing Parameters

Sample I.D.	Date	Time	Matrix	No. of Containers	MTCA Metals *	PCBs	NWTPH-Gx	NWTPH-Dx
~~NBF-RR-SS-A-072011~~	7/20/11	1315	SOIL	2	~~X~~	~~1~~	~~1~~	~~1~~
SMD NBF-RRSS-A-072011				5				

Observations/Comments
NA - SMD
☒ Allow water samples to settle, collect aliquot from clear portion
~~X NWTPH-Dx - run acid wash/silica gel cleanup~~
NOT NEEDED FOR THIS SOIL
___ run samples standardized to _____ product
___ Analyze for EPH if no specific product identified
VOC/BTEX/VPH (soil):
___ non-preserved
___ preserved w/methanol
___ preserved w/sodium bisulfate
___ Freeze upon receipt
___ Dissolved metal water samples field filtered
Other * Arsenic, Cadmium, Chromium Lead, Mercury

Special Shipment/Handling or Storage Requirements

Method of Shipment DROP-OFF @ ARI

Relinquished by	Received by	Relinquished by	Received by
Signature JEREMY JAMS	Signature [illegible]	Signature	Signature
Printed Name LAI	Printed Name Jennifer Millsap	Printed Name	Printed Name
Company	Company ARI	Company	Company
Date 7/20/11 Time 1444	Date 7/20/11 Time 1444	Date Time	Date Time

WHITE COPY - Project File YELLOW COPY - Laboratory PINK COPY - Client Representative

Rev 8/09

Analytical Resources, Incorporated
Analytical Chemists and Consultants

Cooler Receipt Form

ARI Client: ~~ABF-LTST~~ JM Boeing

COC No(s). _____ (NA)

Assigned ARI Job No: TE89

Project Name: MBF-LTST

Delivered by. Fed-Ex UPS Courier Hand Delivered Other: _____

Tracking No: _____ (NA)

Preliminary Examination Phase:

Were intact, properly signed and dated custody seals attached to the outside of to cooler?	(YES)	NO
Were custody papers included with the cooler?	(YES)	NO
Were custody papers properly filled out (ink, signed, etc.)	(YES)	NO
Temperature of Cooler(s) (°C) (recommended 2.0-6.0 °C for chemistry). 5.9		

If cooler temperature is out of compliance fill out form 00070F

Temp Gun ID#: 9094/1619

Cooler Accepted by: JM Date 7/20/11 Time 1444

Complete custody forms and attach all shipping documents

Log-In Phase:

Was a temperature blank included in the cooler?		YES	(NO)
What kind of packing material was used? Bubble Wrap (Wet Ice) Gel Packs Baggies Foam Block Paper Other: _____			
Was sufficient ice used (if appropriate)?	NA	(YES)	NO
Were all bottles sealed in individual plastic bags?		YES	(NO)
Did all bottles arrive in good condition (unbroken)?		(YES)	NO
Were all bottle labels complete and legible?		(YES)	NO
Did the number of containers listed on COC match with the number of containers received?		(YES)	NO
Did all bottle labels and tags agree with custody papers?		(YES)	NO
Were all bottles used correct for the requested analyses?		(YES)	NO
Do any of the analyses (bottles) require preservation? (attach preservation sheet, excluding VOCs)	(NA)	YES	NO
Were all VOC vials free of air bubbles?	(NA)	YES	NO
Was sufficient amount of sample sent in each bottle?		(YES)	NO
Date VOC Trip Blank was made at ARI	(NA)		

Was Sample Split by ARI : (NA) YES Date/Time _____ Equipment: _____ Split by: _____

Samples Logged by: JM Date: 7/20/11 Time: 1510

***** Notify Project Manager of discrepancies or concerns *****

Sample ID on Bottle	Sample ID on COC	Sample ID on Bottle	Sample ID on COC

Additional Notes, Discrepancies, & Resolutions:

By _____ Date _____

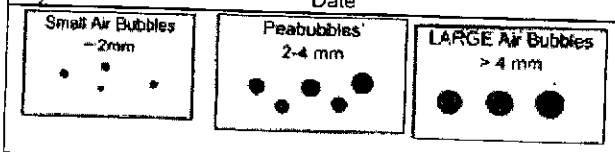

Small → "sm"
Peabubbles → "pb"
Large → "lg"
Headspace → "hs"

ANALYTICAL RESOURCES INCORPORATED

ORGANICS ANALYSIS DATA SHEET
PCB by GC/ECD Method SW8082

Sample ID: NBF-RRSS-A-072011
SAMPLE

Lab Sample ID: TE89A
LIMS ID: 11-15493
Matrix: Soil
Data Release Authorized:
Reported: 07/25/11

QC Report No: TE89-The Boeing Company
Project: NBF-LTST-RR
025.082.311.001
Date Sampled: 07/20/11
Date Received: 07/20/11

Date Extracted: 07/21/11
Date Analyzed: 07/22/11 14:02
Instrument/Analyst: ECD7/JGR
GPC Cleanup: No
Sulfur Cleanup: Yes
Acid Cleanup: Yes
Florisil Cleanup: No

Sample Amount: 13.0 g-dry-wt
Final Extract Volume: 4.00 mL
Dilution Factor: 1.00
Silica Gel: Yes

Percent Moisture: 10.4%

CAS Number	Analyte	RL	Result
12674-11-2	Aroclor 1016	31	< 31 U
53469-21-9	Aroclor 1242	31	< 31 U
12672-29-6	Aroclor 1248	31	< 31 U
11097-69-1	Aroclor 1254	31	< 31 U
11096-82-5	Aroclor 1260	31	< 31 U
11104-28-2	Aroclor 1221	31	< 31 U
11141-16-5	Aroclor 1232	31	< 31 U

Reported in µg/kg (ppb)

PCB Surrogate Recovery

Decachlorobiphenyl	87.8%
Tetrachlorometaxylene	83.0%

ANALYTICAL RESOURCES INCORPORATED

SW8082/PCB SOIL/SEDIMENT SURROGATE RECOVERY SUMMARY

Matrix: Soil

QC Report No: TE89-The Boeing Company
Project: NBF-LTST-RR
025.082.311.001

Client ID	DCBP % REC	DCBP LCL-UCL	TCMX % REC	TCMX LCL-UCL	TOT OUT
MB-072111	89.5%	51-112	71.2%	46-111	0
LCS-072111	92.8%	51-112	75.2%	46-111	0
LCSD-072111	92.8%	51-112	75.0%	46-111	0
NBF-RRSS-A-072011	87.8%	42-127	83.0%	50-114	0

Microwave (MARS) Control Limits
Prep Method: SW3546
Log Number Range: 11-15493 to 11-15493

FORM-II SW8082

ANALYTICAL RESOURCES INCORPORATED

ORGANICS ANALYSIS DATA SHEET
PCB by GC/ECD Method SW8082

Sample ID: LCS-072111
LCS/LCSD

Lab Sample ID: LCS-072111
LIMS ID: 11-15493
Matrix: Soil
Data Release Authorized:
Reported: 07/25/11

QC Report No: TE89-The Boeing Company
Project: NBF-LTST-RR
025.082.311.001
Date Sampled: NA
Date Received: NA

Date Extracted LCS/LCSD: 07/21/11

Date Analyzed LCS: 07/22/11 11:45
LCSD: 07/22/11 12:08
Instrument/Analyst LCS: ECD7/JGR
LCSD: ECD7/JGR
GPC Cleanup: No
Sulfur Cleanup: Yes
Acid Cleanup: Yes
Florisil Cleanup: No

Sample Amount LCS: 12.0 g-dry-wt
LCSD: 12.0 g-dry-wt
Final Extract Volume LCS: 4.00 mL
LCSD: 4.00 mL
Dilution Factor LCS: 1.00
LCSD: 1.00
Silica Gel: Yes

Percent Moisture: NA

Analyte	LCS	Spike Added-LCS	LCS Recovery	LCSD	Spike Added-LCSD	LCSD Recovery	RPD
Aroclor 1016	127	167	76.0%	127	167	76.0%	0.0%
Aroclor 1260	134	167	80.2%	135	167	80.8%	0.7%

PCB Surrogate Recovery

	LCS	LCSD
Decachlorobiphenyl	92.8%	92.8%
Tetrachlorometaxylene	75.2%	75.0%

Results reported in µg/kg (ppb)
RPD calculated using sample concentrations per SW846.

ANALYTICAL RESOURCES INCORPORATED

ORGANICS ANALYSIS DATA SHEET
PCB by GC/ECD Method SW8082

Sample ID: MB-072111
METHOD BLANK

Lab Sample ID: MB-072111
LIMS ID: 11-15493
Matrix: Soil
Data Release Authorized:
Reported: 07/25/11

QC Report No: TE89-The Boeing Company
Project: NBF-LTST-RR
025.082.311.001
Date Sampled: NA
Date Received: NA

Date Extracted: 07/21/11
Date Analyzed: 07/22/11 11:22
Instrument/Analyst: ECD7/JGR
GPC Cleanup: No
Sulfur Cleanup: Yes
Acid Cleanup: Yes
Florisil Cleanup: No

Sample Amount: 12.0 g
Final Extract Volume: 4.00 mL
Dilution Factor: 1.00
Silica Gel: Yes

Percent Moisture: NA

CAS Number	Analyte	RL	Result
12674-11-2	Aroclor 1016	33	< 33 U
53469-21-9	Aroclor 1242	33	< 33 U
12672-29-6	Aroclor 1248	33	< 33 U
11097-69-1	Aroclor 1254	33	< 33 U
11096-82-5	Aroclor 1260	33	< 33 U
11104-28-2	Aroclor 1221	33	< 33 U
11141-16-5	Aroclor 1232	33	< 33 U

Reported in µg/kg (ppb)

PCB Surrogate Recovery

Decachlorobiphenyl	89.5%
Tetrachlorometaxylene	71.2%

ANALYTICAL RESOURCES INCORPORATED

ORGANICS ANALYSIS DATA SHEET
TOTAL DIESEL RANGE HYDROCARBONS
NWTPHD by GC/FID
Page 1 of 1
Matrix: Soil

QC Report No: TE89-The Boeing Company
Project: NBF-LTST-RR
025.082.311.001
Date Received: 07/20/11

Data Release Authorized:
Reported: 07/22/11

ARI ID	Sample ID	Extraction Date	Analysis Date	EFV DL	Range	RL	Result
MB-072111	Method Blank	07/21/11	07/21/11	1.00	Diesel	5.0	< 5.0 U
11-15493	HC ID: ---		FID4A	1.0	Motor Oil	10	< 10 U
					o-Terphenyl		110%
TE89A	NBF-RRSS-A-072011	07/21/11	07/21/11	1.00	**Diesel**	**5.6**	**17**
11-15493	HC ID: **DRO/MOTOR OIL**		FID4A	1.0	**Motor Oil**	**11**	**55**
					o-Terphenyl		105%

Reported in mg/kg (ppm)

EFV-Effective Final Volume in mL.
DL-Dilution of extract prior to analysis.
RL-Reporting limit.

Diesel quantitation on total peaks in the range from C12 to C24.
Motor Oil quantitation on total peaks in the range from C24 to C38.
HC ID: DRO/RRO indicates results of organics or additional hydrocarbons in ranges are not identifiable.

ANALYTICAL RESOURCES INCORPORATED

TPHD SURROGATE RECOVERY SUMMARY

Matrix: Soil

QC Report No: TE89-The Boeing Company
Project: NBF-LTST-RR
025.082.311.001

Client ID	OTER	TOT OUT
072111MBS	110%	0
072111LCS	112%	0
072111LCSD	112%	0
NBF-RRSS-A-072011	105%	0

	LCS/MB LIMITS	QC LIMITS
(OTER) = o-Terphenyl	(50-150)	(50-150)

Prep Method: SW3546
Log Number Range: 11-15493 to 11-15493

FORM-II TPHD

ANALYTICAL RESOURCES INCORPORATED

ORGANICS ANALYSIS DATA SHEET
NWTPHD by GC/FID

Sample ID: LCS-072111
LCS/LCSD

Lab Sample ID: LCS-072111
LIMS ID: 11-15493
Matrix: Soil
Data Release Authorized: VG
Reported: 07/22/11

QC Report No: TE89-The Boeing Company
Project: NBF-LTST-RR
025.082.311.001
Date Sampled: NA
Date Received: NA

Date Extracted LCS/LCSD: 07/21/11

Date Analyzed LCS: 07/21/11 17:32
LCSD: 07/21/11 18:19
Instrument/Analyst LCS: FID4A/MS
LCSD: FID4A/MS

Sample Amount LCS: 10.0 g-dry-wt
LCSD: 10.0 g-dry-wt
Final Extract Volume LCS: 1.0 mL
LCSD: 1.0 mL
Dilution Factor LCS: 1.00
LCSD: 1.00

Range	LCS	Spike Added-LCS	LCS Recovery	LCSD	Spike Added-LCSD	LCSD Recovery	RPD
Diesel	144	150	96.0%	142	150	94.7%	1.4%

TPHD Surrogate Recovery

	LCS	LCSD
o-Terphenyl	112%	112%

Results reported in mg/kg
RPD calculated using sample concentrations per SW846.

ANALYTICAL RESOURCES INCORPORATED

TOTAL DIESEL RANGE HYDROCARBONS-EXTRACTION REPORT

Matrix: Soil
Date Received: 07/20/11

ARI Job: TE89
Project: NBF-LTST-RR
025.082.311.001

ARI ID	Client ID	Client Amt	Final Vol	Basis	Prep Date
11-15493-072111MB1	Method Blank	10.0 g	1.00 mL	-	07/21/11
11-15493-072111LCS1	Lab Control	10.0 g	1.00 mL	-	07/21/11
11-15493-072111LCSD1	Lab Control Dup	10.0 g	1.00 mL	-	07/21/11
11-15493-TE89A	NBF-RRSS-A-072011	8.97 g	1.00 mL	D	07/21/11

Basis: D=Dry Weight W=As Received

ANALYTICAL RESOURCES INCORPORATED

ORGANICS ANALYSIS DATA SHEET
TPHG by Method NWTPHG
Matrix: Soil

Data Release Authorized: VJ
Reported: 07/21/11

QC Report No: TE89-The Boeing Company
Project: NBF-LTST-RR
Event: 025.082.311.001
Date Sampled: 07/20/11
Date Received: 07/20/11

ARI ID	Client ID	Analysis Date	Basis	Range	Result
MB-072111	Method Blank	07/21/11	Dry	Gasoline	< 5.0 U
11-15493		PID1		HC ID	---
				Trifluorotoluene	100%
				Bromobenzene	99.0%
TE89A	NBF-RRSS-A-072011	07/21/11	Dry	Gasoline	< 6.7 U
11-15493		PID1		HC ID	---
				Trifluorotoluene	117%
				Bromobenzene	113%

Gasoline values reported in mg/kg (ppm)

Quantitation on total peaks in the gasoline range from Toluene to Naphthalene.

GAS: Indicates the presence of gasoline or weathered gasoline.
GRO: Positive result that does not match an identifiable gasoline pattern.

Results corrected for soil moisture content per Section 11.10.5 of EPA Method 8000C.

ANALYTICAL RESOURCES INCORPORATED

TPHG SOIL SURROGATE RECOVERY SUMMARY

ARI Job: TE89
Matrix: Soil

QC Report No: TE89-The Boeing Company
Project: NBF-LTST-RR
Event: 025.082.311.001

Client ID	BFB	TFT	BBZ	TOT OUT
MB-072111	NA	100%	99.0%	0
LCS-072111	NA	104%	97.7%	0
LCSD-072111	NA	105%	99.8%	0
NBF-RRSS-A-072011	NA	117%	113%	0

	LCS/MB LIMITS	QC LIMITS
(BFB) = Bromofluorobenzene	(70-130)	(70-130)
(TFT) = Trifluorotoluene	(80-120)	(66-123)
(BBZ) = Bromobenzene	(80-120)	(62-130)

Log Number Range: 11-15493 to 11-15493

FORM II TPHG

ANALYTICAL RESOURCES INCORPORATED

ORGANICS ANALYSIS DATA SHEET
TPHG by Method NWTPHG

Sample ID: LCS-072111
LAB CONTROL SAMPLE

Lab Sample ID: LCS-072111
LIMS ID: 11-15493
Matrix: Soil
Data Release Authorized: VB
Reported: 07/21/11

QC Report No: TE89-The Boeing Company
Project: NBF-LTST-RR
Event: 025.082.311.001
Date Sampled: NA
Date Received: NA

Date Analyzed LCS: 07/21/11 07:02
LCSD: 07/21/11 07:31
Instrument/Analyst LCS: PID1/MS
LCSD: PID1/MS

Purge Volume: 5.0 mL

Sample Amount LCS: 100 mg-dry-wt
LCSD: 100 mg-dry-wt

Analyte	LCS	Spike Added-LCS	LCS Recovery	LCSD	Spike Added-LCSD	LCSD Recovery	RPD
Gasoline Range Hydrocarbons	54.4	50.0	109%	51.0	50.0	102%	6.5%

Reported in mg/kg (ppm)

RPD calculated using sample concentrations per SW846.

TPHG Surrogate Recovery

	LCS	LCSD
Trifluorotoluene	104%	105%
Bromobenzene	97.7%	99.8%

ANALYTICAL RESOURCES INCORPORATED

INORGANICS ANALYSIS DATA SHEET
TOTAL METALS

Sample ID: NBF-RRSS-A-072011
SAMPLE

Lab Sample ID: TE89A
LIMS ID: 11-15493
Matrix: Soil
Data Release Authorized:
Reported: 07/25/11

QC Report No: TE89-The Boeing Company
Project: NBF-LTST-RR
025.082.311.001
Date Sampled: 07/20/11
Date Received: 07/20/11

Percent Total Solids: 89.9%

Prep Meth	Prep Date	Analysis Method	Analysis Date	CAS Number	Analyte	RL	mg/kg-dry	Q
3050B	07/21/11	6010B	07/22/11	7440-38-2	Arsenic	5	5	U
3050B	07/21/11	6010B	07/22/11	7440-43-9	Cadmium	0.2	0.2	U
3050B	07/21/11	6010B	07/22/11	**7440-47-3**	**Chromium**	0.5	**11.4**	
3050B	07/21/11	6010B	07/22/11	**7439-92-1**	**Lead**	2	**9**	
CLP	07/21/11	7471A	07/22/11	7439-97-6	Mercury	0.02	0.02	U

U-Analyte undetected at given RL
RL-Reporting Limit

ANALYTICAL RESOURCES INCORPORATED

INORGANICS ANALYSIS DATA SHEET
TOTAL METALS

Sample ID: LAB CONTROL

Lab Sample ID: TE89LCS
LIMS ID: 11-15493
Matrix: Soil
Data Release Authorized:
Reported: 07/25/11

QC Report No: TE89-The Boeing Company
Project: NBF-LTST-RR
025.082.311.001
Date Sampled: NA
Date Received: NA

BLANK SPIKE QUALITY CONTROL REPORT

Analyte	Analysis Method	Spike Found	Spike Added	% Recovery	Q
Arsenic	6010B	199	200	99.5%	
Cadmium	6010B	50.9	50.0	102%	
Chromium	6010B	50.6	50.0	101%	
Lead	6010B	196	200	98.0%	
Mercury	7471A	0.46	0.50	92.0%	

Reported in mg/kg-dry

N-Control limit not met
NA-Not Applicable, Analyte Not Spiked
Control Limits: 80-120%

ANALYTICAL RESOURCES INCORPORATED

INORGANICS ANALYSIS DATA SHEET
TOTAL METALS

Sample ID: METHOD BLANK

Lab Sample ID: TE89MB
LIMS ID: 11-15493
Matrix: Soil
Data Release Authorized:
Reported: 07/25/11

QC Report No: TE89-The Boeing Company
Project: NBF-LTST-RR
025.082.311.001
Date Sampled: NA
Date Received: NA

Percent Total Solids: NA

Prep Meth	Prep Date	Analysis Method	Analysis Date	CAS Number	Analyte	RL	mg/kg-dry	Q
3050B	07/21/11	6010B	07/22/11	7440-38-2	Arsenic	5	5	U
3050B	07/21/11	6010B	07/22/11	7440-43-9	Cadmium	0.2	0.2	U
3050B	07/21/11	6010B	07/22/11	7440-47-3	Chromium	0.5	0.5	U
3050B	07/21/11	6010B	07/22/11	7439-92-1	Lead	2	2	U
CLP	07/21/11	7471A	07/22/11	7439-97-6	Mercury	0.02	0.02	U

U-Analyte undetected at given RL
RL-Reporting Limit

Analytical Resources, Incorporated
Analytical Chemists and Consultants

August 1, 2011

Jeremy Davis
Landau Associates, Inc.
130 Second Ave
Edmonds, WA 98020

RE: Project: NBF – LTST 025.082.311.001
ARI Job: TF62

Dear Jeremy:

Please find enclosed the Chain of Custody (COC) record, sample receipt documentation, and analytical results for the above referenced project. Analytical Resources, Inc. (ARI) accepted five soil samples in good condition on July 26, 2011. One cooler was received with a temperature of 5.2°C.

The sample was analyzed for PCBs, VOCs, NWTPH-Dx, NWTPH-Gx, and Total and TCLP Metals, as requested on the COC.

The VOCs 7/26/11 CCAL is out of control high for 2-Chloroethylvinylether. All associated samples that contain analyte have been flagged with a "Q" qualifier.

The TCLP metals method blank contained barium in association with the filter.

There were no other irregularities with the sample.

Quality control analysis results are included for your review. Copies of the reports and all associated raw data will be kept on file electronically at ARI. If you have any questions or require additional information, please contact me at your convenience.

Sincerely,
ANALYTICAL RESOURCES, INC

Kelly Bottem
Client Services Manager
(206) 695-6211
kellyb@arilabs.com
www.arilabs.com

cc: Carl Bach, The Boeing Company, P.O. Box 3707, M/S 1W-12, Seattle, WA 98124-2207

4611 South 134th Place, Suite 100 • Tukwila WA 98168 • **206-695-6200** • **206-695-6201** fax

☐ Seattle/Edmonds (425) 778-0907
☐ Tacoma (253) 926-2493
☐ Spokane (509) 327-9737
☐ Portland (503) 542-1080
☐ TF62

LANDAU ASSOCIATES

Chain-of-Custody Record

Date 7/26/11
Page 1 of 1

Project Name NBF-LTST
Project No. 025.082.311.001
Project Location/Event NBF-LTST
Sampler's Name SMD
Project Contact SMD / Carl Bach
Send Results To SMD / Carl Bach / Jennifer P.

Turnaround Time
☐ Standard
☐ Accelerated
☒ 3 DAY

Testing Parameters

Sample I.D.	Date	Time	Matrix	No. of Containers	PCBs (Aroclor) SMD		NWTPH-Gx	NWTPH-Dx	VOCs	MTCA-5 Metals *	RCRA-TCLP Metals					
NBF-SOILSK01-1-072611	7/26/11	1015	S	2	X		X	X		X						
NBF-SOILSK10-2-072611	↓	1130	↓	↓	X		X	X		X						
NBF-N111418 SMD		1040			X		X	X		X						
NBF-N111420		1050			X		X	X		X						
NBF-RRSS-A-072611	↓	1215	↓	↓	X	X	X		X							

Observations/Comments

X Allow water samples to settle, collect aliquot from clear portion

X NWTPH-Dx - run acid wash/silica gel cleanup

NOT NECESSARY SMD

___ run samples standardized to _____ product

___ Analyze for EPH if no specific product identified

VOC/BTEX/VPH (soil):
___ non-preserved
___ preserved w/methanol
___ preserved w/sodium bisulfate
___ Freeze upon receipt

___ Dissolved metal water samples field filtered

Other * Arsenic, Cadmium, Chromium, Lead, Mercury

Special Shipment/Handling or Storage Requirements

Method of Shipment Drop-off @ ARI

Relinquished by	Received by	Relinquished by	Received by
Signature	Signature	Signature	Signature
Jeremy Davis	Taylor Streeter		
Printed Name	Printed Name	Printed Name	Printed Name
Landau Associates Inc	ARI		
Company	Company	Company	Company
Date 7/26/11 Time 1410	Date 7-26-11 Time 1400	Date Time	Date Time

WHITE COPY - Project File YELLOW COPY - Laboratory PINK COPY - Client Representative

Rev 8/09

Analytical Resources, Incorporated
Analytical Chemists and Consultants

Cooler Receipt Form

ARI Client: Boeing

Project Name: NBF

COC No(s): _____ NA

Delivered by: Fed-Ex UPS Courier Hand Delivered Other: _____

Assigned ARI Job No: TF62

Tracking No: _____ NA

Preliminary Examination Phase:

Were intact, properly signed and dated custody seals attached to the outside of to cooler? YES NO

Were custody papers included with the cooler? ..... YES NO

Were custody papers properly filled out (ink, signed, etc.) ..... YES NO

Temperature of Cooler(s) (°C) (recommended 2.0-6.0 °C for chemistry)..... 5.2 ____ ____ ____ ____

If cooler temperature is out of compliance fill out form 00070F

Temp Gun ID#: 90541616

Cooler Accepted by: TS Date: 7-26-11 Time: 1405

Complete custody forms and attach all shipping documents

Log-In Phase:

Was a temperature blank included in the cooler? ..... YES NO

What kind of packing material was used? ... Bubble Wrap Wet Ice Gel Packs Baggies Foam Block Paper Other: _____

Was sufficient ice used (if appropriate)? ..... NA YES NO

Were all bottles sealed in individual plastic bags? ..... YES NO

Did all bottles arrive in good condition (unbroken)? ..... YES NO

Were all bottle labels complete and legible? ..... YES NO

Did the number of containers listed on COC match with the number of containers received? ..... YES NO

Did all bottle labels and tags agree with custody papers? ..... YES NO

Were all bottles used correct for the requested analyses? ..... YES NO

Do any of the analyses (bottles) require preservation? (attach preservation sheet, excluding VOCs)... NA YES NO

Were all VOC vials free of air bubbles? ..... NA YES NO

Was sufficient amount of sample sent in each bottle? ..... YES NO

Date VOC Trip Blank was made at ARI..... NA _____

Was Sample Split by ARI : NA YES Date/Time: _____ Equipment: _____ Split by: _____

Samples Logged by: TS Date: 7-26-11 Time: 1500

***** Notify Project Manager of discrepancies or concerns *****

Sample ID on Bottle	Sample ID on COC	Sample ID on Bottle	Sample ID on COC

Additional Notes, Discrepancies, & Resolutions:

By: Date:

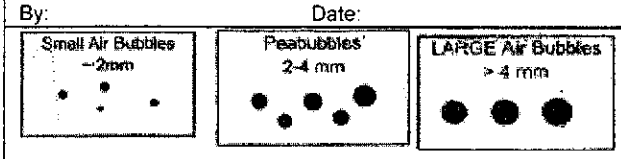

Small → "sm"
Peabubbles → "pb"
Large → "lg"
Headspace → "hs"

Sample ID Cross Reference Report

ANALYTICAL RESOURCES INCORPORATED

ARI Job No: TF62
Client: The Boeing Company
Project Event: 025.082.311.001
Project Name: NBF-LTST

	Sample ID	ARI Lab ID	ARI LIMS ID	Matrix	Sample Date/Time	VTSR
1.	NBF-SOILSKID-1-072611	TF62A	11-15943	Soil	07/26/11 10:15	07/26/11 14:05
2.	NBF-SOILSKID-2-072611	TF62B	11-15944	Soil	07/26/11 10:30	07/26/11 14:05
3.	NBF-N111418	TF62C	11-15945	Soil	07/26/11 10:40	07/26/11 14:05
4.	NBF-N111420	TF62D	11-15946	Soil	07/26/11 10:50	07/26/11 14:05
5.	NBF-RRSS-A-072611	TF62E	11-15947	Soil	07/26/11 12:15	07/26/11 14:05

Printed 07/27/11

ANALYTICAL RESOURCES INCORPORATED

ORGANICS ANALYSIS DATA SHEET
TOTAL DIESEL RANGE HYDROCARBONS
NWTPHD by GC/FID
Page 1 of 1
Matrix: Soil

QC Report No: TF62-The Boeing Company
Project: NBF-LTST
025.082.311.001
Date Received: 07/26/11

Data Release Authorized: VD
Reported: 07/29/11

ARI ID	Sample ID	Extraction Date	Analysis Date	EFV DL	Range	RL	Result
MB-072611	Method Blank	07/26/11	07/27/11	1.00	Diesel	5.0	< 5.0 U
11-15943	HC ID: ---		FID4A	1.0	Motor Oil	10	< 10 U
					o-Terphenyl		106%
TF62A	NBF-SOILSKID-1-07261	07/26/11	07/27/11	1.00	**Diesel**	**5.3**	**72**
11-15943	HC ID: **DRO/MOTOR OIL**		FID4A	1.0	**Motor Oil**	**11**	**240**
					o-Terphenyl		95.0%
TF62B	NBF-SOILSKID-2-07261	07/26/11	07/27/11	1.00	**Diesel**	**27**	**120**
11-15944	HC ID: **DRO/MOTOR OIL**		FID4A	5.0	**Motor Oil**	**54**	**230**
					o-Terphenyl		90.9%
TF62C	NBF-N111418	07/26/11	07/27/11	1.00	Diesel	5.2	< 5.2 U
11-15945	HC ID: ---		FID4A	1.0	Motor Oil	10	< 10 U
					o-Terphenyl		106%
TF62D	NBF-N111420	07/26/11	07/27/11	1.00	**Diesel**	**5.6**	**11**
11-15946	HC ID: **DRO/MOTOR OIL**		FID4A	1.0	**Motor Oil**	**11**	**46**
					o-Terphenyl		102%
TF62E	NBF-RRSS-A-072611	07/26/11	07/27/11	1.00	**Diesel**	**5.2**	**32**
11-15947	HC ID: **DRO/MOTOR OIL**		FID4A	1.0	**Motor Oil**	**10**	**110**
					o-Terphenyl		95.9%

Reported in mg/kg (ppm)

EFV-Effective Final Volume in mL.
DL-Dilution of extract prior to analysis.
RL-Reporting limit.

Diesel quantitation on total peaks in the range from C12 to C24.
Motor Oil quantitation on total peaks in the range from C24 to C38.
HC ID: DRO/RRO indicates results of organics or additional hydrocarbons in ranges are not identifiable.

ANALYTICAL RESOURCES INCORPORATED

TPHD SURROGATE RECOVERY SUMMARY

Matrix: Soil

QC Report No: TF62-The Boeing Company
Project: NBF-LTST
025.082.311.001

Client ID	OTER	TOT OUT
072611MBS	106%	0
072611LCS	100%	0
072611LCSD	108%	0
NBF-SOILSKID-1-072611	95.0%	0
NBF-SOILSKID-2-072611	90.9%	0
NBF-N111418	106%	0
NBF-N111420	102%	0
NBF-RRSS-A-072611	95.9%	0

	LCS/MB LIMITS	QC LIMITS
(OTER) = o-Terphenyl	(50-150)	(50-150)

Prep Method: SW3546
Log Number Range: 11-15943 to 11-15947

FORM-II TPHD

ANALYTICAL RESOURCES INCORPORATED

ORGANICS ANALYSIS DATA SHEET
NWTPHD by GC/FID

Sample ID: LCS-072611
LCS/LCSD

Lab Sample ID: LCS-072611
LIMS ID: 11-15943
Matrix: Soil
Data Release Authorized: VJ
Reported: 07/29/11

QC Report No: TF62-The Boeing Company
Project: NBF-LTST
025.082.311.001
Date Sampled: NA
Date Received: NA

Date Extracted LCS/LCSD: 07/26/11

Date Analyzed LCS: 07/27/11 18:53
LCSD: 07/27/11 19:16
Instrument/Analyst LCS: FID4A/MS
LCSD: FID4A/MS

Sample Amount LCS: 10.0 g-dry-wt
LCSD: 10.0 g-dry-wt
Final Extract Volume LCS: 1.0 mL
LCSD: 1.0 mL
Dilution Factor LCS: 1.00
LCSD: 1.00

Range	LCS	Spike Added-LCS	LCS Recovery	LCSD	Spike Added-LCSD	LCSD Recovery	RPD
Diesel	126	150	84.0%	133	150	88.7%	5.4%

TPHD Surrogate Recovery

	LCS	LCSD
o-Terphenyl	100%	108%

Results reported in mg/kg
RPD calculated using sample concentrations per SW846.

ANALYTICAL RESOURCES INCORPORATED

TOTAL DIESEL RANGE HYDROCARBONS-EXTRACTION REPORT

ARI Job: TF62
Project: NBF-LTST
025.082.311.001

Matrix: Soil
Date Received: 07/26/11

ARI ID	Client ID	Client Amt	Final Vol	Basis	Prep Date
11-15943-072611MB1	Method Blank	10.0 g	1.00 mL	-	07/26/11
11-15943-072611LCS1	Lab Control	10.0 g	1.00 mL	-	07/26/11
11-15943-072611LCSD1	Lab Control Dup	10.0 g	1.00 mL	-	07/26/11
11-15943-TF62A	NBF-SOILSKID-1-07269	9.40 g	1.00 mL	D	07/26/11
11-15944-TF62B	NBF-SOILSKID-2-07269	9.35 g	1.00 mL	D	07/26/11
11-15945-TF62C	NBF-N111418	9.53 g	1.00 mL	D	07/26/11
11-15946-TF62D	NBF-N111420	8.91 g	1.00 mL	D	07/26/11
11-15947-TF62E	NBF-RRSS-A-072611	9.57 g	1.00 mL	D	07/26/11

Basis: D=Dry Weight W=As Received

ANALYTICAL RESOURCES INCORPORATED

ORGANICS ANALYSIS DATA SHEET
PCB by GC/ECD Method SW8082

Sample ID: NBF-SOILSKID-1-072611
SAMPLE

Lab Sample ID: TF62A
LIMS ID: 11-15943
Matrix: Soil
Data Release Authorized: UN
Reported: 07/29/11

QC Report No: TF62-The Boeing Company
Project: NBF-LTST
025.082.311.001
Date Sampled: 07/26/11
Date Received: 07/26/11

Date Extracted: 07/27/11
Date Analyzed: 07/29/11 01:42
Instrument/Analyst: ECD7/PKC
GPC Cleanup: No
Sulfur Cleanup: Yes
Acid Cleanup: Yes
Florisil Cleanup: No

Sample Amount: 12.1 g-dry-wt
Final Extract Volume: 4.00 mL
Dilution Factor: 5.00
Silica Gel: No

Percent Moisture: 7.6%

CAS Number	Analyte	RL	Result
12674-11-2	Aroclor 1016	33	< 33 U
53469-21-9	Aroclor 1242	33	< 33 U
12672-29-6	Aroclor 1248	50	< 50 Y
11097-69-1	**Aroclor 1254**	**33**	**170**
11096-82-5	**Aroclor 1260**	**33**	**110**
11104-28-2	Aroclor 1221	33	< 33 U
11141-16-5	Aroclor 1232	33	< 33 U

Reported in µg/kg (ppb)

PCB Surrogate Recovery

Decachlorobiphenyl	117%
Tetrachlorometaxylene	88.6%

ANALYTICAL RESOURCES INCORPORATED

ORGANICS ANALYSIS DATA SHEET
PCB by GC/ECD Method SW8082

Sample ID: NBF-SOILSKID-2-072611
SAMPLE

Lab Sample ID: TF62B
LIMS ID: 11-15944
Matrix: Soil
Data Release Authorized: VD
Reported: 07/29/11

QC Report No: TF62-The Boeing Company
Project: NBF-LTST
025.082.311.001
Date Sampled: 07/26/11
Date Received: 07/26/11

Date Extracted: 07/27/11
Date Analyzed: 07/29/11 02:05
Instrument/Analyst: ECD7/PKC
GPC Cleanup: No
Sulfur Cleanup: Yes
Acid Cleanup: Yes
Florisil Cleanup: No

Sample Amount: 12.9 g-dry-wt
Final Extract Volume: 4.00 mL
Dilution Factor: 5.00
Silica Gel: No

Percent Moisture: 8.0%

CAS Number	Analyte	RL	Result
12674-11-2	Aroclor 1016	31	< 31 U
53469-21-9	Aroclor 1242	31	< 31 U
12672-29-6	Aroclor 1248	54	< 54 Y
11097-69-1	**Aroclor 1254**	**31**	**310**
11096-82-5	**Aroclor 1260**	**31**	**260**
11104-28-2	Aroclor 1221	31	< 31 U
11141-16-5	Aroclor 1232	31	< 31 U

Reported in µg/kg (ppb)

PCB Surrogate Recovery

Decachlorobiphenyl	120%
Tetrachlorometaxylene	86.4%

ANALYTICAL RESOURCES INCORPORATED

ORGANICS ANALYSIS DATA SHEET
PCB by GC/ECD Method SW8082

Sample ID: NBF-N111418
SAMPLE

Lab Sample ID: TF62C
LIMS ID: 11-15945
Matrix: Soil
Data Release Authorized: VD
Reported: 07/29/11

QC Report No: TF62-The Boeing Company
Project: NBF-LTST
025.082.311.001
Date Sampled: 07/26/11
Date Received: 07/26/11

Date Extracted: 07/27/11
Date Analyzed: 07/29/11 02:27
Instrument/Analyst: ECD7/PKC
GPC Cleanup: No
Sulfur Cleanup: Yes
Acid Cleanup: Yes
Florisil Cleanup: No

Sample Amount: 12.7 g-dry-wt
Final Extract Volume: 4.00 mL
Dilution Factor: 5.00
Silica Gel: No

Percent Moisture: 9.1%

CAS Number	Analyte	RL	Result
12674-11-2	Aroclor 1016	31	< 31 U
53469-21-9	Aroclor 1242	31	< 31 U
12672-29-6	Aroclor 1248	31	< 31 U
11097-69-1	Aroclor 1254	31	< 31 U
11096-82-5	Aroclor 1260	31	< 31 U
11104-28-2	Aroclor 1221	31	< 31 U
11141-16-5	Aroclor 1232	31	< 31 U

Reported in µg/kg (ppb)

PCB Surrogate Recovery

Decachlorobiphenyl	87.8%
Tetrachlorometaxylene	78.5%

ANALYTICAL RESOURCES INCORPORATED

ORGANICS ANALYSIS DATA SHEET
PCB by GC/ECD Method SW8082

Sample ID: NBF-N111420
SAMPLE

Lab Sample ID: TF62D
LIMS ID: 11-15946
Matrix: Soil
Data Release Authorized: VD
Reported: 07/29/11

QC Report No: TF62-The Boeing Company
Project: NBF-LTST
025.082.311.001
Date Sampled: 07/26/11
Date Received: 07/26/11

Date Extracted: 07/27/11
Date Analyzed: 07/29/11 02:50
Instrument/Analyst: ECD7/PKC
GPC Cleanup: No
Sulfur Cleanup: Yes
Acid Cleanup: Yes
Florisil Cleanup: No

Sample Amount: 12.8 g-dry-wt
Final Extract Volume: 4.00 mL
Dilution Factor: 5.00
Silica Gel: No

Percent Moisture: 15.0%

CAS Number	Analyte	RL	Result
12674-11-2	Aroclor 1016	31	< 31 U
53469-21-9	Aroclor 1242	31	< 31 U
12672-29-6	Aroclor 1248	31	< 31 U
11097-69-1	Aroclor 1254	31	< 31 U
11096-82-5	Aroclor 1260	31	< 31 U
11104-28-2	Aroclor 1221	31	< 31 U
11141-16-5	Aroclor 1232	31	< 31 U

Reported in µg/kg (ppb)

PCB Surrogate Recovery

Decachlorobiphenyl	92.9%
Tetrachlorometaxylene	90.1%

ANALYTICAL RESOURCES INCORPORATED

ORGANICS ANALYSIS DATA SHEET
PCB by GC/ECD Method SW8082

Sample ID: NBF-RRSS-A-072611
SAMPLE

Lab Sample ID: TF62E
LIMS ID: 11-15947
Matrix: Soil
Data Release Authorized: VB
Reported: 07/29/11

QC Report No: TF62-The Boeing Company
Project: NBF-LTST
025.082.311.001
Date Sampled: 07/26/11
Date Received: 07/26/11

Date Extracted: 07/27/11
Date Analyzed: 07/29/11 03:13
Instrument/Analyst: ECD7/PKC
GPC Cleanup: No
Sulfur Cleanup: Yes
Acid Cleanup: Yes
Florisil Cleanup: No

Sample Amount: 12.9 g-dry-wt
Final Extract Volume: 4.00 mL
Dilution Factor: 5.00
Silica Gel: No

Percent Moisture: 8.2%

CAS Number	Analyte	RL	Result
12674-11-2	Aroclor 1016	31	< 31 U
53469-21-9	Aroclor 1242	31	< 31 U
12672-29-6	Aroclor 1248	31	< 31 U
11097-69-1	Aroclor 1254	31	< 31 U
11096-82-5	Aroclor 1260	31	< 31 U
11104-28-2	Aroclor 1221	31	< 31 U
11141-16-5	Aroclor 1232	31	< 31 U

Reported in µg/kg (ppb)

PCB Surrogate Recovery

Decachlorobiphenyl	93.0%
Tetrachlorometaxylene	88.8%

ANALYTICAL RESOURCES INCORPORATED

ORGANICS ANALYSIS DATA SHEET
PCB by GC/ECD Method SW8082

Sample ID: MB-072711
METHOD BLANK

Lab Sample ID: MB-072711
LIMS ID: 11-15943
Matrix: Soil
Data Release Authorized: VTB
Reported: 07/29/11

QC Report No: TF62-The Boeing Company
Project: NBF-LTST
025.082.311.001
Date Sampled: NA
Date Received: NA

Date Extracted: 07/27/11
Date Analyzed: 07/29/11 00:33
Instrument/Analyst: ECD7/PKC
GPC Cleanup: No
Sulfur Cleanup: Yes
Acid Cleanup: Yes
Florisil Cleanup: No

Sample Amount: 12.0 g
Final Extract Volume: 4.00 mL
Dilution Factor: 5.00
Silica Gel: No

Percent Moisture: NA

CAS Number	Analyte	RL	Result
12674-11-2	Aroclor 1016	33	< 33 U
53469-21-9	Aroclor 1242	33	< 33 U
12672-29-6	Aroclor 1248	33	< 33 U
11097-69-1	Aroclor 1254	33	< 33 U
11096-82-5	Aroclor 1260	33	< 33 U
11104-28-2	Aroclor 1221	33	< 33 U
11141-16-5	Aroclor 1232	33	< 33 U

Reported in µg/kg (ppb)

PCB Surrogate Recovery	
Decachlorobiphenyl	91.1%
Tetrachlorometaxylene	88.8%

ANALYTICAL RESOURCES INCORPORATED

SW8082/PCB SOIL/SEDIMENT SURROGATE RECOVERY SUMMARY

Matrix: Soil

QC Report No: TF62-The Boeing Company
Project: NBF-LTST
025.082.311.001

Client ID	DCBP % REC	DCBP LCL-UCL	TCMX % REC	TCMX LCL-UCL	TOT OUT
MB-072711	91.1%	51-112	88.8%	46-111	0
LCS-072711	83.4%	51-112	79.1%	46-111	0
LCSD-072711	91.8%	51-112	88.4%	46-111	0
NBF-SOILSKID-1-072611	117%	42-127	88.6%	50-114	0
NBF-SOILSKID-2-072611	120%	42-127	86.4%	50-114	0
NBF-N111418	87.8%	42-127	78.5%	50-114	0
NBF-N111420	92.9%	42-127	90.1%	50-114	0
NBF-RRSS-A-072611	93.0%	42-127	88.8%	50-114	0

Microwave (MARS) Control Limits
Prep Method: SW3546
Log Number Range: 11-15943 to 11-15947

FORM-II SW8082

ANALYTICAL RESOURCES INCORPORATED

ORGANICS ANALYSIS DATA SHEET
PCB by GC/ECD Method SW8082

Sample ID: LCS-072711
LCS/LCSD

Lab Sample ID: LCS-072711
LIMS ID: 11-15943
Matrix: Soil
Data Release Authorized: VT
Reported: 07/29/11

QC Report No: TF62-The Boeing Company
Project: NBF-LTST
025.082.311.001
Date Sampled: NA
Date Received: NA

Date Extracted LCS/LCSD: 07/27/11

Date Analyzed LCS: 07/29/11 00:56
LCSD: 07/29/11 01:19
Instrument/Analyst LCS: ECD7/PKC
LCSD: ECD7/PKC
GPC Cleanup: No
Sulfur Cleanup: Yes
Acid Cleanup: Yes
Florisil Cleanup: No

Sample Amount LCS: 12.0 g-dry-wt
LCSD: 12.0 g-dry-wt
Final Extract Volume LCS: 4.00 mL
LCSD: 4.00 mL
Dilution Factor LCS: 5.00
LCSD: 5.00
Silica Gel: No

Percent Moisture: NA

Analyte	LCS	Spike Added-LCS	LCS Recovery	LCSD	Spike Added-LCSD	LCSD Recovery	RPD
Aroclor 1016	139	167	83.2%	154	167	92.2%	10.2%
Aroclor 1260	141	167	84.4%	153	167	91.6%	8.2%

PCB Surrogate Recovery

	LCS	LCSD
Decachlorobiphenyl	83.4%	91.8%
Tetrachlorometaxylene	79.1%	88.4%

Results reported in µg/kg (ppb)
RPD calculated using sample concentrations per SW846.

ANALYTICAL RESOURCES INCORPORATED

ORGANICS ANALYSIS DATA SHEET
TPHG by Method NWTPHG
Matrix: Soil

Data Release Authorized: VB
Reported: 07/29/11

QC Report No: TF62-The Boeing Company
Project: NBF-LTST
Event: 025.082.311.001
Date Sampled: 07/26/11
Date Received: 07/26/11

ARI ID	Client ID	Analysis Date	Basis	Range	Result
MB-072711	Method Blank	07/27/11	Dry	Gasoline	< 5.0 U
11-15947		PID1		HC ID	---
				Trifluorotoluene	92.2%
				Bromobenzene	90.6%
TF62E	NBF-RRSS-A-072611	07/27/11	Dry	Gasoline	< 6.4 U
11-15947		PID1		HC ID	---
				Trifluorotoluene	102%
				Bromobenzene	98.2%

Gasoline values reported in mg/kg (ppm)

Quantitation on total peaks in the gasoline range from Toluene to Naphthalene.

GAS: Indicates the presence of gasoline or weathered gasoline.
GRO: Positive result that does not match an identifiable gasoline pattern.

Results corrected for soil moisture content per Section 11.10.5 of EPA Method 8000C.

ANALYTICAL RESOURCES INCORPORATED

ORGANICS ANALYSIS DATA SHEET
TPHG by Method NWTPHG

Sample ID: LCS-072711
LAB CONTROL SAMPLE

Lab Sample ID: LCS-072711
LIMS ID: 11-15947
Matrix: Soil
Data Release Authorized: VB
Reported: 07/29/11

QC Report No: TF62-The Boeing Company
Project: NBF-LTST
Event: 025.082.311.001
Date Sampled: NA
Date Received: NA

Date Analyzed LCS: 07/27/11 13:45
LCSD: 07/27/11 14:14
Instrument/Analyst LCS: PID1/MH
LCSD: PID1/MH

Purge Volume: 5.0 mL

Sample Amount LCS: 100 mg-dry-wt
LCSD: 100 mg-dry-wt

Analyte	LCS	Spike Added-LCS	LCS Recovery	LCSD	Spike Added-LCSD	LCSD Recovery	RPD
Gasoline Range Hydrocarbons	48.2	50.0	96.4%	45.4	50.0	90.8%	6.0%

Reported in mg/kg (ppm)

RPD calculated using sample concentrations per SW846.

TPHG Surrogate Recovery

	LCS	LCSD
Trifluorotoluene	102%	98.8%
Bromobenzene	97.7%	96.2%

ANALYTICAL RESOURCES INCORPORATED

TPHG SOIL SURROGATE RECOVERY SUMMARY

ARI Job: TF62
Matrix: Soil

QC Report No: TF62-The Boeing Company
Project: NBF-LTST
Event: 025.082.311.001

Client ID	BFB	TFT	BBZ	TOT OUT
MB-072711	NA	92.2%	90.6%	0
LCS-072711	NA	102%	97.7%	0
LCSD-072711	NA	98.8%	96.2%	0
NBF-RRSS-A-072611	NA	102%	98.2%	0

	LCS/MB LIMITS	QC LIMITS
(BFB) = Bromofluorobenzene	(70-130)	(70-130)
(TFT) = Trifluorotoluene	(80-120)	(66-123)
(BBZ) = Bromobenzene	(80-120)	(62-130)

Log Number Range: 11-15947 to 11-15947

FORM II TPHG

ANALYTICAL RESOURCES INCORPORATED

ORGANICS ANALYSIS DATA SHEET
Volatiles by Purge & Trap GC/MS-Method SW8260C

Sample ID: NBF-SOILSKID-1-072611
SAMPLE

Lab Sample ID: TF62A
LIMS ID: 11-15943
Matrix: Soil
Data Release Authorized:
Reported: 07/28/11

QC Report No: TF62-The Boeing Company
Project: NBF-LTST
025.082.311.001
Date Sampled: 07/26/11
Date Received: 07/26/11

Instrument/Analyst: FINN5/PAB
Date Analyzed: 07/26/11 17:46

Sample Amount: 4.97 g-dry-wt
Purge Volume: 5.0 mL
Moisture: 7.6%

CAS Number	Analyte	RL	Result	Q
74-87-3	Chloromethane	1.0	< 1.0	U
74-83-9	Bromomethane	1.0	< 1.0	U
75-01-4	Vinyl Chloride	1.0	< 1.0	U
75-00-3	Chloroethane	1.0	< 1.0	U
75-09-2	Methylene Chloride	2.0	< 2.0	U
67-64-1	Acetone	5.0	< 5.0	U
75-15-0	Carbon Disulfide	1.0	< 1.0	U
75-35-4	1,1-Dichloroethene	1.0	< 1.0	U
75-34-3	1,1-Dichloroethane	1.0	< 1.0	U
156-60-5	trans-1,2-Dichloroethene	1.0	< 1.0	U
156-59-2	cis-1,2-Dichloroethene	1.0	< 1.0	U
67-66-3	Chloroform	1.0	< 1.0	U
107-06-2	1,2-Dichloroethane	1.0	< 1.0	U
78-93-3	2-Butanone	5.0	< 5.0	U
71-55-6	1,1,1-Trichloroethane	1.0	< 1.0	U
56-23-5	Carbon Tetrachloride	1.0	< 1.0	U
108-05-4	Vinyl Acetate	5.0	< 5.0	U
75-27-4	Bromodichloromethane	1.0	< 1.0	U
78-87-5	1,2-Dichloropropane	1.0	< 1.0	U
10061-01-5	cis-1,3-Dichloropropene	1.0	< 1.0	U
79-01-6	Trichloroethene	1.0	< 1.0	U
124-48-1	Dibromochloromethane	1.0	< 1.0	U
79-00-5	1,1,2-Trichloroethane	1.0	< 1.0	U
71-43-2	Benzene	1.0	< 1.0	U
10061-02-6	trans-1,3-Dichloropropene	1.0	< 1.0	U
110-75-8	2-Chloroethylvinylether	5.0	< 5.0	U
75-25-2	Bromoform	1.0	< 1.0	U
108-10-1	4-Methyl-2-Pentanone (MIBK)	5.0	< 5.0	U
591-78-6	2-Hexanone	5.0	< 5.0	U
127-18-4	**Tetrachloroethene**	**1.0**	**11**	
79-34-5	1,1,2,2-Tetrachloroethane	1.0	< 1.0	U
108-88-3	Toluene	1.0	< 1.0	U
108-90-7	Chlorobenzene	1.0	< 1.0	U
100-41-4	Ethylbenzene	1.0	< 1.0	U
100-42-5	Styrene	1.0	< 1.0	U
75-69-4	Trichlorofluoromethane	1.0	< 1.0	U
76-13-1	1,1,2-Trichloro-1,2,2-trifluoroe	2.0	< 2.0	U
179601-23-1	m,p-Xylene	1.0	< 1.0	U
95-47-6	o-Xylene	1.0	< 1.0	U
95-50-1	1,2-Dichlorobenzene	1.0	< 1.0	U
541-73-1	1,3-Dichlorobenzene	1.0	< 1.0	U
106-46-7	1,4-Dichlorobenzene	1.0	< 1.0	U
107-02-8	Acrolein	50	< 50	U

ANALYTICAL RESOURCES INCORPORATED

ORGANICS ANALYSIS DATA SHEET
Volatiles by Purge & Trap GC/MS-Method SW8260C **Sample ID: NBF-SOILSKID-1-072611**
 SAMPLE

Lab Sample ID: TF62A
LIMS ID: 11-15943
Matrix: Soil
Date Analyzed: 07/26/11 17:46

QC Report No: TF62-The Boeing Company
Project: NBF-LTST
025.082.311.001

CAS Number	Analyte	RL	Result	Q
74-88-4	Methyl Iodide	1.0	< 1.0	U
74-96-4	Bromoethane	2.0	< 2.0	U
107-13-1	Acrylonitrile	5.0	< 5.0	U
563-58-6	1,1-Dichloropropene	1.0	< 1.0	U
74-95-3	Dibromomethane	1.0	< 1.0	U
630-20-6	1,1,1,2-Tetrachloroethane	1.0	< 1.0	U
96-12-8	1,2-Dibromo-3-chloropropane	5.0	< 5.0	U
96-18-4	1,2,3-Trichloropropane	2.0	< 2.0	U
110-57-6	trans-1,4-Dichloro-2-butene	5.0	< 5.0	U
108-67-8	1,3,5-Trimethylbenzene	1.0	< 1.0	U
95-63-6	1,2,4-Trimethylbenzene	1.0	< 1.0	U
87-68-3	Hexachlorobutadiene	5.0	< 5.0	U
106-93-4	Ethylene Dibromide	1.0	< 1.0	U
74-97-5	Bromochloromethane	1.0	< 1.0	U
594-20-7	2,2-Dichloropropane	1.0	< 1.0	U
142-28-9	1,3-Dichloropropane	1.0	< 1.0	U
98-82-8	Isopropylbenzene	1.0	< 1.0	U
103-65-1	n-Propylbenzene	1.0	< 1.0	U
108-86-1	Bromobenzene	1.0	< 1.0	U
95-49-8	2-Chlorotoluene	1.0	< 1.0	U
106-43-4	4-Chlorotoluene	1.0	< 1.0	U
98-06-6	tert-Butylbenzene	1.0	< 1.0	U
135-98-8	sec-Butylbenzene	1.0	< 1.0	U
99-87-6	4-Isopropyltoluene	1.0	< 1.0	U
104-51-8	n-Butylbenzene	1.0	< 1.0	U
120-82-1	1,2,4-Trichlorobenzene	5.0	< 5.0	U
91-20-3	Naphthalene	5.0	< 5.0	U
87-61-6	1,2,3-Trichlorobenzene	5.0	< 5.0	U

Reported in µg/kg (ppb)

Volatile Surrogate Recovery

d4-1,2-Dichloroethane	105%
d8-Toluene	101%
Bromofluorobenzene	87.3%
d4-1,2-Dichlorobenzene	97.6%

ANALYTICAL RESOURCES INCORPORATED

ORGANICS ANALYSIS DATA SHEET
Volatiles by Purge & Trap GC/MS-Method SW8260C

Sample ID: NBF-SOILSKID-2-072611
SAMPLE

Lab Sample ID: TF62B
LIMS ID: 11-15944
Matrix: Soil
Data Release Authorized:
Reported: 07/28/11

QC Report No: TF62-The Boeing Company
Project: NBF-LTST
025.082.311.001
Date Sampled: 07/26/11
Date Received: 07/26/11

Instrument/Analyst: FINN5/PAB
Date Analyzed: 07/26/11 18:14

Sample Amount: 4.92 g-dry-wt
Purge Volume: 5.0 mL
Moisture: 8.0%

CAS Number	Analyte	RL	Result	Q
74-87-3	Chloromethane	1.0	< 1.0	U
74-83-9	Bromomethane	1.0	< 1.0	U
75-01-4	Vinyl Chloride	1.0	< 1.0	U
75-00-3	Chloroethane	1.0	< 1.0	U
75-09-2	Methylene Chloride	2.0	< 2.0	U
67-64-1	Acetone	5.1	< 5.1	U
75-15-0	Carbon Disulfide	1.0	< 1.0	U
75-35-4	1,1-Dichloroethene	1.0	< 1.0	U
75-34-3	1,1-Dichloroethane	1.0	< 1.0	U
156-60-5	trans-1,2-Dichloroethene	1.0	< 1.0	U
156-59-2	cis-1,2-Dichloroethene	1.0	< 1.0	U
67-66-3	Chloroform	1.0	< 1.0	U
107-06-2	1,2-Dichloroethane	1.0	< 1.0	U
78-93-3	2-Butanone	5.1	< 5.1	U
71-55-6	1,1,1-Trichloroethane	1.0	< 1.0	U
56-23-5	Carbon Tetrachloride	1.0	< 1.0	U
108-05-4	Vinyl Acetate	5.1	< 5.1	U
75-27-4	Bromodichloromethane	1.0	< 1.0	U
78-87-5	1,2-Dichloropropane	1.0	< 1.0	U
10061-01-5	cis-1,3-Dichloropropene	1.0	< 1.0	U
79-01-6	Trichloroethene	1.0	< 1.0	U
124-48-1	Dibromochloromethane	1.0	< 1.0	U
79-00-5	1,1,2-Trichloroethane	1.0	< 1.0	U
71-43-2	Benzene	1.0	< 1.0	U
10061-02-6	trans-1,3-Dichloropropene	1.0	< 1.0	U
110-75-8	2-Chloroethylvinylether	5.1	< 5.1	U
75-25-2	Bromoform	1.0	< 1.0	U
108-10-1	4-Methyl-2-Pentanone (MIBK)	5.1	< 5.1	U
591-78-6	2-Hexanone	5.1	< 5.1	U
127-18-4	**Tetrachloroethene**	**1.0**	**9.0**	
79-34-5	1,1,2,2-Tetrachloroethane	1.0	< 1.0	U
108-88-3	Toluene	1.0	< 1.0	U
108-90-7	Chlorobenzene	1.0	< 1.0	U
100-41-4	Ethylbenzene	1.0	< 1.0	U
100-42-5	Styrene	1.0	< 1.0	U
75-69-4	Trichlorofluoromethane	1.0	< 1.0	U
76-13-1	1,1,2-Trichloro-1,2,2-trifluoroe	2.0	< 2.0	U
179601-23-1	m,p-Xylene	1.0	< 1.0	U
95-47-6	o-Xylene	1.0	< 1.0	U
95-50-1	1,2-Dichlorobenzene	1.0	< 1.0	U
541-73-1	1,3-Dichlorobenzene	1.0	< 1.0	U
106-46-7	1,4-Dichlorobenzene	1.0	< 1.0	U
107-02-8	Acrolein	51	< 51	U

ANALYTICAL RESOURCES INCORPORATED

ORGANICS ANALYSIS DATA SHEET
Volatiles by Purge & Trap GC/MS-Method SW8260C

Sample ID: NBF-SOILSKID-2-072611
SAMPLE

Lab Sample ID: TF62B
LIMS ID: 11-15944
Matrix: Soil
Date Analyzed: 07/26/11 18:14

QC Report No: TF62-The Boeing Company
Project: NBF-LTST
025.082.311.001

CAS Number	Analyte	RL	Result	Q
74-88-4	Methyl Iodide	1.0	< 1.0	U
74-96-4	Bromoethane	2.0	< 2.0	U
107-13-1	Acrylonitrile	5.1	< 5.1	U
563-58-6	1,1-Dichloropropene	1.0	< 1.0	U
74-95-3	Dibromomethane	1.0	< 1.0	U
630-20-6	1,1,1,2-Tetrachloroethane	1.0	< 1.0	U
96-12-8	1,2-Dibromo-3-chloropropane	5.1	< 5.1	U
96-18-4	1,2,3-Trichloropropane	2.0	< 2.0	U
110-57-6	trans-1,4-Dichloro-2-butene	5.1	< 5.1	U
108-67-8	1,3,5-Trimethylbenzene	1.0	< 1.0	U
95-63-6	1,2,4-Trimethylbenzene	1.0	< 1.0	U
87-68-3	Hexachlorobutadiene	5.1	< 5.1	U
106-93-4	Ethylene Dibromide	1.0	< 1.0	U
74-97-5	Bromochloromethane	1.0	< 1.0	U
594-20-7	2,2-Dichloropropane	1.0	< 1.0	U
142-28-9	1,3-Dichloropropane	1.0	< 1.0	U
98-82-8	Isopropylbenzene	1.0	< 1.0	U
103-65-1	n-Propylbenzene	1.0	< 1.0	U
108-86-1	Bromobenzene	1.0	< 1.0	U
95-49-8	2-Chlorotoluene	1.0	< 1.0	U
106-43-4	4-Chlorotoluene	1.0	< 1.0	U
98-06-6	tert-Butylbenzene	1.0	< 1.0	U
135-98-8	sec-Butylbenzene	1.0	< 1.0	U
99-87-6	4-Isopropyltoluene	1.0	< 1.0	U
104-51-8	n-Butylbenzene	1.0	< 1.0	U
120-82-1	1,2,4-Trichlorobenzene	5.1	< 5.1	U
91-20-3	Naphthalene	5.1	< 5.1	U
87-61-6	1,2,3-Trichlorobenzene	5.1	< 5.1	U

Reported in µg/kg (ppb)

Volatile Surrogate Recovery

d4-1,2-Dichloroethane	102%
d8-Toluene	98.1%
Bromofluorobenzene	86.3%
d4-1,2-Dichlorobenzene	98.8%

ANALYTICAL RESOURCES INCORPORATED

ORGANICS ANALYSIS DATA SHEET
Volatiles by Purge & Trap GC/MS-Method SW8260C **Sample ID: NBF-N111418**
 SAMPLE

Lab Sample ID: TF62C
LIMS ID: 11-15945
Matrix: Soil
Data Release Authorized:
Reported: 07/28/11

QC Report No: TF62-The Boeing Company
Project: NBF-LTST
025.082.311.001
Date Sampled: 07/26/11
Date Received: 07/26/11

Instrument/Analyst: FINN5/PAB
Date Analyzed: 07/26/11 18:41

Sample Amount: 5.28 g-dry-wt
Purge Volume: 5.0 mL
Moisture: 9.1%

CAS Number	Analyte	RL	Result	Q
74-87-3	Chloromethane	0.9	< 0.9	U
74-83-9	Bromomethane	0.9	< 0.9	U
75-01-4	Vinyl Chloride	0.9	< 0.9	U
75-00-3	Chloroethane	0.9	< 0.9	U
75-09-2	Methylene Chloride	1.9	< 1.9	U
67-64-1	Acetone	4.7	< 4.7	U
75-15-0	Carbon Disulfide	0.9	< 0.9	U
75-35-4	1,1-Dichloroethene	0.9	< 0.9	U
75-34-3	1,1-Dichloroethane	0.9	< 0.9	U
156-60-5	trans-1,2-Dichloroethene	0.9	< 0.9	U
156-59-2	cis-1,2-Dichloroethene	0.9	< 0.9	U
67-66-3	Chloroform	0.9	< 0.9	U
107-06-2	1,2-Dichloroethane	0.9	< 0.9	U
78-93-3	2-Butanone	4.7	< 4.7	U
71-55-6	1,1,1-Trichloroethane	0.9	< 0.9	U
56-23-5	Carbon Tetrachloride	0.9	< 0.9	U
108-05-4	Vinyl Acetate	4.7	< 4.7	U
75-27-4	Bromodichloromethane	0.9	< 0.9	U
78-87-5	1,2-Dichloropropane	0.9	< 0.9	U
10061-01-5	cis-1,3-Dichloropropene	0.9	< 0.9	U
79-01-6	Trichloroethene	0.9	< 0.9	U
124-48-1	Dibromochloromethane	0.9	< 0.9	U
79-00-5	1,1,2-Trichloroethane	0.9	< 0.9	U
71-43-2	Benzene	0.9	< 0.9	U
10061-02-6	trans-1,3-Dichloropropene	0.9	< 0.9	U
110-75-8	2-Chloroethylvinylether	4.7	< 4.7	U
75-25-2	Bromoform	0.9	< 0.9	U
108-10-1	4-Methyl-2-Pentanone (MIBK)	4.7	< 4.7	U
591-78-6	2-Hexanone	4.7	< 4.7	U
127-18-4	Tetrachloroethene	0.9	< 0.9	U
79-34-5	1,1,2,2-Tetrachloroethane	0.9	< 0.9	U
108-88-3	Toluene	0.9	< 0.9	U
108-90-7	Chlorobenzene	0.9	< 0.9	U
100-41-4	Ethylbenzene	0.9	< 0.9	U
100-42-5	Styrene	0.9	< 0.9	U
75-69-4	Trichlorofluoromethane	0.9	< 0.9	U
76-13-1	1,1,2-Trichloro-1,2,2-trifluoroe	1.9	< 1.9	U
179601-23-1	m,p-Xylene	0.9	< 0.9	U
95-47-6	o-Xylene	0.9	< 0.9	U
95-50-1	1,2-Dichlorobenzene	0.9	< 0.9	U
541-73-1	1,3-Dichlorobenzene	0.9	< 0.9	U
106-46-7	1,4-Dichlorobenzene	0.9	< 0.9	U
107-02-8	Acrolein	47	< 47	U

ANALYTICAL RESOURCES INCORPORATED

ORGANICS ANALYSIS DATA SHEET
Volatiles by Purge & Trap GC/MS-Method SW8260C **Sample ID: NBF-N111418**
 SAMPLE

Lab Sample ID: TF62C
LIMS ID: 11-15945
Matrix: Soil
Date Analyzed: 07/26/11 18:41

QC Report No: TF62-The Boeing Company
Project: NBF-LTST
025.082.311.001

CAS Number	Analyte	RL	Result	Q
74-88-4	Methyl Iodide	0.9	< 0.9	U
74-96-4	Bromoethane	1.9	< 1.9	U
107-13-1	Acrylonitrile	4.7	< 4.7	U
563-58-6	1,1-Dichloropropene	0.9	< 0.9	U
74-95-3	Dibromomethane	0.9	< 0.9	U
630-20-6	1,1,1,2-Tetrachloroethane	0.9	< 0.9	U
96-12-8	1,2-Dibromo-3-chloropropane	4.7	< 4.7	U
96-18-4	1,2,3-Trichloropropane	1.9	< 1.9	U
110-57-6	trans-1,4-Dichloro-2-butene	4.7	< 4.7	U
108-67-8	1,3,5-Trimethylbenzene	0.9	< 0.9	U
95-63-6	1,2,4-Trimethylbenzene	0.9	< 0.9	U
87-68-3	Hexachlorobutadiene	4.7	< 4.7	U
106-93-4	Ethylene Dibromide	0.9	< 0.9	U
74-97-5	Bromochloromethane	0.9	< 0.9	U
594-20-7	2,2-Dichloropropane	0.9	< 0.9	U
142-28-9	1,3-Dichloropropane	0.9	< 0.9	U
98-82-8	Isopropylbenzene	0.9	< 0.9	U
103-65-1	n-Propylbenzene	0.9	< 0.9	U
108-86-1	Bromobenzene	0.9	< 0.9	U
95-49-8	2-Chlorotoluene	0.9	< 0.9	U
106-43-4	4-Chlorotoluene	0.9	< 0.9	U
98-06-6	tert-Butylbenzene	0.9	< 0.9	U
135-98-8	sec-Butylbenzene	0.9	< 0.9	U
99-87-6	4-Isopropyltoluene	0.9	< 0.9	U
104-51-8	n-Butylbenzene	0.9	< 0.9	U
120-82-1	1,2,4-Trichlorobenzene	4.7	< 4.7	U
91-20-3	Naphthalene	4.7	< 4.7	U
87-61-6	1,2,3-Trichlorobenzene	4.7	< 4.7	U

Reported in µg/kg (ppb)

Volatile Surrogate Recovery

d4-1,2-Dichloroethane	102%
d8-Toluene	101%
Bromofluorobenzene	87.3%
d4-1,2-Dichlorobenzene	101%

ANALYTICAL RESOURCES INCORPORATED

ORGANICS ANALYSIS DATA SHEET
Volatiles by Purge & Trap GC/MS-Method SW8260C **Sample ID: NBF-N111420**
 SAMPLE

Lab Sample ID: TF62D
LIMS ID: 11-15946
Matrix: Soil
Data Release Authorized:
Reported: 07/28/11

QC Report No: TF62-The Boeing Company
Project: NBF-LTST
025.082.311.001
Date Sampled: 07/26/11
Date Received: 07/26/11

Instrument/Analyst: FINN5/PAB
Date Analyzed: 07/26/11 19:08

Sample Amount: 4.61 g-dry-wt
Purge Volume: 5.0 mL
Moisture: 15.0%

CAS Number	Analyte	RL	Result	Q
74-87-3	Chloromethane	1.1	< 1.1	U
74-83-9	Bromomethane	1.1	< 1.1	U
75-01-4	Vinyl Chloride	1.1	< 1.1	U
75-00-3	Chloroethane	1.1	< 1.1	U
75-09-2	Methylene Chloride	2.2	< 2.2	U
67-64-1	**Acetone**	**5.4**	**21**	
75-15-0	Carbon Disulfide	1.1	< 1.1	U
75-35-4	1,1-Dichloroethene	1.1	< 1.1	U
75-34-3	1,1-Dichloroethane	1.1	< 1.1	U
156-60-5	trans-1,2-Dichloroethene	1.1	< 1.1	U
156-59-2	cis-1,2-Dichloroethene	1.1	< 1.1	U
67-66-3	Chloroform	1.1	< 1.1	U
107-06-2	1,2-Dichloroethane	1.1	< 1.1	U
78-93-3	2-Butanone	5.4	< 5.4	U
71-55-6	1,1,1-Trichloroethane	1.1	< 1.1	U
56-23-5	Carbon Tetrachloride	1.1	< 1.1	U
108-05-4	Vinyl Acetate	5.4	< 5.4	U
75-27-4	Bromodichloromethane	1.1	< 1.1	U
78-87-5	1,2-Dichloropropane	1.1	< 1.1	U
10061-01-5	cis-1,3-Dichloropropene	1.1	< 1.1	U
79-01-6	Trichloroethene	1.1	< 1.1	U
124-48-1	Dibromochloromethane	1.1	< 1.1	U
79-00-5	1,1,2-Trichloroethane	1.1	< 1.1	U
71-43-2	Benzene	1.1	< 1.1	U
10061-02-6	trans-1,3-Dichloropropene	1.1	< 1.1	U
110-75-8	2-Chloroethylvinylether	5.4	< 5.4	U
75-25-2	Bromoform	1.1	< 1.1	U
108-10-1	4-Methyl-2-Pentanone (MIBK)	5.4	< 5.4	U
591-78-6	2-Hexanone	5.4	< 5.4	U
127-18-4	Tetrachloroethene	1.1	< 1.1	U
79-34-5	1,1,2,2-Tetrachloroethane	1.1	< 1.1	U
108-88-3	Toluene	1.1	< 1.1	U
108-90-7	Chlorobenzene	1.1	< 1.1	U
100-41-4	Ethylbenzene	1.1	< 1.1	U
100-42-5	Styrene	1.1	< 1.1	U
75-69-4	Trichlorofluoromethane	1.1	< 1.1	U
76-13-1	1,1,2-Trichloro-1,2,2-trifluoroe	2.2	< 2.2	U
179601-23-1	m,p-Xylene	1.1	< 1.1	U
95-47-6	o-Xylene	1.1	< 1.1	U
95-50-1	1,2-Dichlorobenzene	1.1	< 1.1	U
541-73-1	1,3-Dichlorobenzene	1.1	< 1.1	U
106-46-7	1,4-Dichlorobenzene	1.1	< 1.1	U
107-02-8	Acrolein	54	< 54	U

ANALYTICAL RESOURCES INCORPORATED

ORGANICS ANALYSIS DATA SHEET
Volatiles by Purge & Trap GC/MS-Method SW8260C **Sample ID: NBF-N111420**
 SAMPLE

Lab Sample ID: TF62D
LIMS ID: 11-15946
Matrix: Soil
Date Analyzed: 07/26/11 19:08

QC Report No: TF62-The Boeing Company
Project: NBF-LTST
025.082.311.001

CAS Number	Analyte	RL	Result	Q
74-88-4	Methyl Iodide	1.1	< 1.1	U
74-96-4	Bromoethane	2.2	< 2.2	U
107-13-1	Acrylonitrile	5.4	< 5.4	U
563-58-6	1,1-Dichloropropene	1.1	< 1.1	U
74-95-3	Dibromomethane	1.1	< 1.1	U
630-20-6	1,1,1,2-Tetrachloroethane	1.1	< 1.1	U
96-12-8	1,2-Dibromo-3-chloropropane	5.4	< 5.4	U
96-18-4	1,2,3-Trichloropropane	2.2	< 2.2	U
110-57-6	trans-1,4-Dichloro-2-butene	5.4	< 5.4	U
108-67-8	1,3,5-Trimethylbenzene	1.1	< 1.1	U
95-63-6	1,2,4-Trimethylbenzene	1.1	< 1.1	U
87-68-3	Hexachlorobutadiene	5.4	< 5.4	U
106-93-4	Ethylene Dibromide	1.1	< 1.1	U
74-97-5	Bromochloromethane	1.1	< 1.1	U
594-20-7	2,2-Dichloropropane	1.1	< 1.1	U
142-28-9	1,3-Dichloropropane	1.1	< 1.1	U
98-82-8	Isopropylbenzene	1.1	< 1.1	U
103-65-1	n-Propylbenzene	1.1	< 1.1	U
108-86-1	Bromobenzene	1.1	< 1.1	U
95-49-8	2-Chlorotoluene	1.1	< 1.1	U
106-43-4	4-Chlorotoluene	1.1	< 1.1	U
98-06-6	tert-Butylbenzene	1.1	< 1.1	U
135-98-8	sec-Butylbenzene	1.1	< 1.1	U
99-87-6	4-Isopropyltoluene	1.1	< 1.1	U
104-51-8	n-Butylbenzene	1.1	< 1.1	U
120-82-1	1,2,4-Trichlorobenzene	5.4	< 5.4	U
91-20-3	Naphthalene	5.4	< 5.4	U
87-61-6	1,2,3-Trichlorobenzene	5.4	< 5.4	U

Reported in µg/kg (ppb)

Volatile Surrogate Recovery

d4-1,2-Dichloroethane	106%
d8-Toluene	101%
Bromofluorobenzene	87.5%
d4-1,2-Dichlorobenzene	101%

ANALYTICAL RESOURCES INCORPORATED

ORGANICS ANALYSIS DATA SHEET
Volatiles by Purge & Trap GC/MS-Method SW8260C **Sample ID: MB-072611**
 METHOD BLANK

Lab Sample ID: MB-072611
LIMS ID: 11-15946
Matrix: Soil
Data Release Authorized:
Reported: 07/28/11

QC Report No: TF62-The Boeing Company
Project: NBF-LTST
025.082.311.001
Date Sampled: NA
Date Received: NA

Instrument/Analyst: FINN5/PAB
Date Analyzed: 07/26/11 12:37

Sample Amount: 5.00 g-dry-wt
Purge Volume: 5.0 mL
Moisture: NA

CAS Number	Analyte	RL	Result	Q
74-87-3	Chloromethane	1.0	< 1.0	U
74-83-9	Bromomethane	1.0	< 1.0	U
75-01-4	Vinyl Chloride	1.0	< 1.0	U
75-00-3	Chloroethane	1.0	< 1.0	U
75-09-2	Methylene Chloride	2.0	< 2.0	U
67-64-1	Acetone	5.0	< 5.0	U
75-15-0	Carbon Disulfide	1.0	< 1.0	U
75-35-4	1,1-Dichloroethene	1.0	< 1.0	U
75-34-3	1,1-Dichloroethane	1.0	< 1.0	U
156-60-5	trans-1,2-Dichloroethene	1.0	< 1.0	U
156-59-2	cis-1,2-Dichloroethene	1.0	< 1.0	U
67-66-3	Chloroform	1.0	< 1.0	U
107-06-2	1,2-Dichloroethane	1.0	< 1.0	U
78-93-3	2-Butanone	5.0	< 5.0	U
71-55-6	1,1,1-Trichloroethane	1.0	< 1.0	U
56-23-5	Carbon Tetrachloride	1.0	< 1.0	U
108-05-4	Vinyl Acetate	5.0	< 5.0	U
75-27-4	Bromodichloromethane	1.0	< 1.0	U
78-87-5	1,2-Dichloropropane	1.0	< 1.0	U
10061-01-5	cis-1,3-Dichloropropene	1.0	< 1.0	U
79-01-6	Trichloroethene	1.0	< 1.0	U
124-48-1	Dibromochloromethane	1.0	< 1.0	U
79-00-5	1,1,2-Trichloroethane	1.0	< 1.0	U
71-43-2	Benzene	1.0	< 1.0	U
10061-02-6	trans-1,3-Dichloropropene	1.0	< 1.0	U
110-75-8	2-Chloroethylvinylether	5.0	< 5.0	U
75-25-2	Bromoform	1.0	< 1.0	U
108-10-1	4-Methyl-2-Pentanone (MIBK)	5.0	< 5.0	U
591-78-6	2-Hexanone	5.0	< 5.0	U
127-18-4	Tetrachloroethene	1.0	< 1.0	U
79-34-5	1,1,2,2-Tetrachloroethane	1.0	< 1.0	U
108-88-3	Toluene	1.0	< 1.0	U
108-90-7	Chlorobenzene	1.0	< 1.0	U
100-41-4	Ethylbenzene	1.0	< 1.0	U
100-42-5	Styrene	1.0	< 1.0	U
75-69-4	Trichlorofluoromethane	1.0	< 1.0	U
76-13-1	1,1,2-Trichloro-1,2,2-trifluoroe	2.0	< 2.0	U
179601-23-1	m,p-Xylene	1.0	< 1.0	U
95-47-6	o-Xylene	1.0	< 1.0	U
95-50-1	1,2-Dichlorobenzene	1.0	< 1.0	U
541-73-1	1,3-Dichlorobenzene	1.0	< 1.0	U
106-46-7	1,4-Dichlorobenzene	1.0	< 1.0	U
107-02-8	Acrolein	50	< 50	U

ANALYTICAL RESOURCES INCORPORATED

ORGANICS ANALYSIS DATA SHEET
Volatiles by Purge & Trap GC/MS-Method SW8260C **Sample ID: MB-072611**

METHOD BLANK

Lab Sample ID: MB-072611
LIMS ID: 11-15946
Matrix: Soil
Date Analyzed: 07/26/11 12:37

QC Report No: TF62-The Boeing Company
Project: NBF-LTST
025.082.311.001

CAS Number	Analyte	RL	Result	Q
74-88-4	Methyl Iodide	1.0	< 1.0	U
74-96-4	Bromoethane	2.0	< 2.0	U
107-13-1	Acrylonitrile	5.0	< 5.0	U
563-58-6	1,1-Dichloropropene	1.0	< 1.0	U
74-95-3	Dibromomethane	1.0	< 1.0	U
630-20-6	1,1,1,2-Tetrachloroethane	1.0	< 1.0	U
96-12-8	1,2-Dibromo-3-chloropropane	5.0	< 5.0	U
96-18-4	1,2,3-Trichloropropane	2.0	< 2.0	U
110-57-6	trans-1,4-Dichloro-2-butene	5.0	< 5.0	U
108-67-8	1,3,5-Trimethylbenzene	1.0	< 1.0	U
95-63-6	1,2,4-Trimethylbenzene	1.0	< 1.0	U
87-68-3	Hexachlorobutadiene	5.0	< 5.0	U
106-93-4	Ethylene Dibromide	1.0	< 1.0	U
74-97-5	Bromochloromethane	1.0	< 1.0	U
594-20-7	2,2-Dichloropropane	1.0	< 1.0	U
142-28-9	1,3-Dichloropropane	1.0	< 1.0	U
98-82-8	Isopropylbenzene	1.0	< 1.0	U
103-65-1	n-Propylbenzene	1.0	< 1.0	U
108-86-1	Bromobenzene	1.0	< 1.0	U
95-49-8	2-Chlorotoluene	1.0	< 1.0	U
106-43-4	4-Chlorotoluene	1.0	< 1.0	U
98-06-6	tert-Butylbenzene	1.0	< 1.0	U
135-98-8	sec-Butylbenzene	1.0	< 1.0	U
99-87-6	4-Isopropyltoluene	1.0	< 1.0	U
104-51-8	n-Butylbenzene	1.0	< 1.0	U
120-82-1	1,2,4-Trichlorobenzene	5.0	< 5.0	U
91-20-3	Naphthalene	5.0	< 5.0	U
87-61-6	1,2,3-Trichlorobenzene	5.0	< 5.0	U

Reported in µg/kg (ppb)

Volatile Surrogate Recovery

d4-1,2-Dichloroethane	96.3%
d8-Toluene	102%
Bromofluorobenzene	91.5%
d4-1,2-Dichlorobenzene	100%

ANALYTICAL RESOURCES INCORPORATED

VOA SURROGATE RECOVERY SUMMARY

Matrix: Soil

QC Report No: TF62-The Boeing Company
Project: NBF-LTST
025.082.311.001

ARI ID	Client ID	Level	DCE	TOL	BFB	DCB	TOT OUT
TF62A	NBF-SOILSKID-1-072611	Low	105%	101%	87.3%	97.6%	0
TF62B	NBF-SOILSKID-2-072611	Low	102%	98.1%	86.3%	98.8%	0
TF62C	NBF-N111418	Low	102%	101%	87.3%	101%	0
MB-072611	Method Blank	Low	96.3%	102%	91.5%	100%	0
LCS-072611	Lab Control	Low	92.9%	102%	97.6%	100%	0
LCSD-072611	Lab Control Dup	Low	95.1%	100%	96.6%	101%	0
TF62D	NBF-N111420	Low	106%	101%	87.5%	101%	0

	LCS/MB LIMITS		QC LIMITS	
SW8260C	Low	Med	Low	Med
(DCE) = d4-1,2-Dichloroethane	79-121	76-120	75-152	69-120
(TOL) = d8-Toluene	80-120	80-120	82-115	80-120
(BFB) = Bromofluorobenzene	80-120	80-120	64-120	76-128
(DCB) = d4-1,2-Dichlorobenzene	80-120	80-120	80-120	80-120

Log Number Range: 11-15943 to 11-15946

ANALYTICAL RESOURCES INCORPORATED

ORGANICS ANALYSIS DATA SHEET
Volatiles by Purge & Trap GC/MS-Method SW8260C **Sample ID: LCS-072611**
 LAB CONTROL SAMPLE

Lab Sample ID: LCS-072611
LIMS ID: 11-15946
Matrix: Soil
Data Release Authorized:
Reported: 07/28/11

QC Report No: TF62-The Boeing Company
Project: NBF-LTST
025.082.311.001
Date Sampled: NA
Date Received: NA

Instrument/Analyst LCS: FINN5/PAB
LCSD: FINN5/PAB
Date Analyzed LCS: 07/26/11 11:35
LCSD: 07/26/11 12:09

Sample Amount LCS: 5.00 g-dry-wt
LCSD: 5.00 g-dry-wt
Purge Volume LCS: 5.0 mL
LCSD: 5.0 mL
Moisture: NA

Analyte	LCS	Spike Added-LCS	LCS Recovery	LCSD	Spike Added-LCSD	LCSD Recovery	RPD
Chloromethane	40.8	50.0	81.6%	45.3	50.0	90.6%	10.5%
Bromomethane	42.8	50.0	85.6%	47.6	50.0	95.2%	10.6%
Vinyl Chloride	47.9	50.0	95.8%	52.1	50.0	104%	8.4%
Chloroethane	41.5	50.0	83.0%	50.5	50.0	101%	19.6%
Methylene Chloride	43.4	50.0	86.8%	48.4	50.0	96.8%	10.9%
Acetone	288	250	115%	242	250	96.8%	17.4%
Carbon Disulfide	45.6	50.0	91.2%	51.5	50.0	103%	12.2%
1,1-Dichloroethene	44.8	50.0	89.6%	51.1	50.0	102%	13.1%
1,1-Dichloroethane	46.2	50.0	92.4%	53.2	50.0	106%	14.1%
trans-1,2-Dichloroethene	46.0	50.0	92.0%	51.6	50.0	103%	11.5%
cis-1,2-Dichloroethene	46.8	50.0	93.6%	53.1	50.0	106%	12.6%
Chloroform	46.5	50.0	93.0%	52.2	50.0	104%	11.6%
1,2-Dichloroethane	44.2	50.0	88.4%	48.5	50.0	97.0%	9.3%
2-Butanone	271	250	108%	261	250	104%	3.8%
1,1,1-Trichloroethane	45.9	50.0	91.8%	51.8	50.0	104%	12.1%
Carbon Tetrachloride	44.7	50.0	89.4%	49.7	50.0	99.4%	10.6%
Vinyl Acetate	46.1	50.0	92.2%	52.3	50.0	105%	12.6%
Bromodichloromethane	48.2	50.0	96.4%	51.9	50.0	104%	7.4%
1,2-Dichloropropane	49.6	50.0	99.2%	53.2	50.0	106%	7.0%
cis-1,3-Dichloropropene	49.9	50.0	99.8%	54.3	50.0	109%	8.4%
Trichloroethene	49.2	50.0	98.4%	52.6	50.0	105%	6.7%
Dibromochloromethane	49.2	50.0	98.4%	52.1	50.0	104%	5.7%
1,1,2-Trichloroethane	49.2	50.0	98.4%	54.0	50.0	108%	9.3%
Benzene	50.3	50.0	101%	55.8	50.0	112%	10.4%
trans-1,3-Dichloropropene	49.3	50.0	98.6%	53.4	50.0	107%	8.0%
2-Chloroethylvinylether	61.9 Q	50.0	124%	67.6 Q	50.0	135%	8.8%
Bromoform	48.7	50.0	97.4%	50.6	50.0	101%	3.8%
4-Methyl-2-Pentanone (MIBK)	252	250	101%	276	250	110%	9.1%
2-Hexanone	279	250	112%	281	250	112%	0.7%
Tetrachloroethene	48.8	50.0	97.6%	53.2	50.0	106%	8.6%
1,1,2,2-Tetrachloroethane	49.2	50.0	98.4%	51.9	50.0	104%	5.3%
Toluene	48.9	50.0	97.8%	54.6	50.0	109%	11.0%
Chlorobenzene	48.7	50.0	97.4%	52.8	50.0	106%	8.1%
Ethylbenzene	51.0	50.0	102%	55.2	50.0	110%	7.9%
Styrene	50.9	50.0	102%	54.5	50.0	109%	6.8%
Trichlorofluoromethane	47.9	50.0	95.8%	53.4	50.0	107%	10.9%
1,1,2-Trichloro-1,2,2-trifluoroetha	50.3	50.0	101%	57.4	50.0	115%	13.2%
m,p-Xylene	102	100	102%	113	100	113%	10.2%
o-Xylene	48.7	50.0	97.4%	52.4	50.0	105%	7.3%
1,2-Dichlorobenzene	48.7	50.0	97.4%	51.8	50.0	104%	6.2%
1,3-Dichlorobenzene	51.0	50.0	102%	54.2	50.0	108%	6.1%
1,4-Dichlorobenzene	51.1	50.0	102%	53.5	50.0	107%	4.6%
Acrolein	245	250	98.0%	266	250	106%	8.2%
Methyl Iodide	46.4	50.0	92.8%	51.0	50.0	102%	9.4%
Bromoethane	44.6	50.0	89.2%	50.3	50.0	101%	12.0%
Acrylonitrile	45.3	50.0	90.6%	50.0	50.0	100%	9.9%

ANALYTICAL RESOURCES INCORPORATED

ORGANICS ANALYSIS DATA SHEET
Volatiles by Purge & Trap GC/MS-Method SW8260C **Sample ID: LCS-072611**
 LAB CONTROL SAMPLE

Lab Sample ID: LCS-072611
LIMS ID: 11-15946
Matrix: Soil

QC Report No: TF62-The Boeing Company
Project: NBF-LTST
025.082.311.001

Analyte	LCS	Spike Added-LCS	LCS Recovery	LCSD	Spike Added-LCSD	LCSD Recovery	RPD
1,1-Dichloropropene	46.5	50.0	93.0%	51.5	50.0	103%	10.2%
Dibromomethane	48.8	50.0	97.6%	51.9	50.0	104%	6.2%
1,1,1,2-Tetrachloroethane	48.0	50.0	96.0%	51.4	50.0	103%	6.8%
1,2-Dibromo-3-chloropropane	41.5	50.0	83.0%	47.5	50.0	95.0%	13.5%
1,2,3-Trichloropropane	47.9	50.0	95.8%	51.9	50.0	104%	8.0%
trans-1,4-Dichloro-2-butene	45.7	50.0	91.4%	48.6	50.0	97.2%	6.2%
1,3,5-Trimethylbenzene	52.2	50.0	104%	55.3	50.0	111%	5.8%
1,2,4-Trimethylbenzene	51.3	50.0	103%	55.5	50.0	111%	7.9%
Hexachlorobutadiene	43.7	50.0	87.4%	47.4	50.0	94.8%	8.1%
Ethylene Dibromide	49.4	50.0	98.8%	54.4	50.0	109%	9.6%
Bromochloromethane	47.4	50.0	94.8%	52.9	50.0	106%	11.0%
2,2-Dichloropropane	45.5	50.0	91.0%	51.4	50.0	103%	12.2%
1,3-Dichloropropane	49.5	50.0	99.0%	51.9	50.0	104%	4.7%
Isopropylbenzene	53.2	50.0	106%	57.1	50.0	114%	7.1%
n-Propylbenzene	51.3	50.0	103%	55.1	50.0	110%	7.1%
Bromobenzene	48.7	50.0	97.4%	51.8	50.0	104%	6.2%
2-Chlorotoluene	49.5	50.0	99.0%	52.0	50.0	104%	4.9%
4-Chlorotoluene	49.8	50.0	99.6%	55.2	50.0	110%	10.3%
tert-Butylbenzene	49.7	50.0	99.4%	53.2	50.0	106%	6.8%
sec-Butylbenzene	54.8	50.0	110%	58.6	50.0	117%	6.7%
4-Isopropyltoluene	53.0	50.0	106%	57.0	50.0	114%	7.3%
n-Butylbenzene	53.8	50.0	108%	58.2	50.0	116%	7.9%
1,2,4-Trichlorobenzene	47.0	50.0	94.0%	50.7	50.0	101%	7.6%
Naphthalene	45.8	50.0	91.6%	50.7	50.0	101%	10.2%
1,2,3-Trichlorobenzene	44.3	50.0	88.6%	48.7	50.0	97.4%	9.5%

Reported in µg/kg (ppb)

RPD calculated using sample concentrations per SW846.

Volatile Surrogate Recovery

	LCS	LCSD
d4-1,2-Dichloroethane	92.9%	95.1%
d8-Toluene	102%	100%
Bromofluorobenzene	97.6%	96.6%
d4-1,2-Dichlorobenzene	100%	101%

ANALYTICAL RESOURCES INCORPORATED

INORGANICS ANALYSIS DATA SHEET
TOTAL METALS

Sample ID: NBF-RRSS-A-072611
SAMPLE

Lab Sample ID: TF62E
LIMS ID: 11-15947
Matrix: Soil
Data Release Authorized:
Reported: 08/01/11

QC Report No: TF62-The Boeing Company
Project: NBF-LTST
025.082.311.001
Date Sampled: 07/26/11
Date Received: 07/26/11

Percent Total Solids: 91.0%

Prep Meth	Prep Date	Analysis Method	Analysis Date	CAS Number	Analyte	RL	mg/kg-dry	Q
3050B	07/27/11	6010B	07/28/11	**7440-38-2**	**Arsenic**	5	**7**	
3050B	07/27/11	6010B	07/28/11	7440-43-9	Cadmium	0.2	0.2	U
3050B	07/27/11	6010B	07/28/11	**7440-47-3**	**Chromium**	0.5	**13.2**	
3050B	07/27/11	6010B	07/28/11	**7439-92-1**	**Lead**	2	**29**	
CLP	07/27/11	7471A	07/27/11	7439-97-6	Mercury	0.03	0.03	U

U-Analyte undetected at given RL
RL-Reporting Limit

ANALYTICAL RESOURCES INCORPORATED

INORGANICS ANALYSIS DATA SHEET
TOTAL METALS

Sample ID: METHOD BLANK

Lab Sample ID: TF62MB
LIMS ID: 11-15947
Matrix: Soil
Data Release Authorized:
Reported: 08/01/11

QC Report No: TF62-The Boeing Company
Project: NBF-LTST
025.082.311.001
Date Sampled: NA
Date Received: NA

Percent Total Solids: NA

Prep Meth	Prep Date	Analysis Method	Analysis Date	CAS Number	Analyte	RL	mg/kg-dry	Q
3050B	07/27/11	6010B	07/28/11	7440-38-2	Arsenic	5	5	U
3050B	07/27/11	6010B	07/28/11	7440-43-9	Cadmium	0.2	0.2	U
3050B	07/27/11	6010B	07/28/11	7440-47-3	Chromium	0.5	0.5	U
3050B	07/27/11	6010B	07/28/11	7439-92-1	Lead	2	2	U
CLP	07/27/11	7471A	07/27/11	7439-97-6	Mercury	0.02	0.02	U

U-Analyte undetected at given RL
RL-Reporting Limit

ANALYTICAL RESOURCES INCORPORATED

INORGANICS ANALYSIS DATA SHEET
TOTAL METALS

Sample ID: LAB CONTROL

Lab Sample ID: TF62LCS
LIMS ID: 11-15947
Matrix: Soil
Data Release Authorized:
Reported: 08/01/11

QC Report No: TF62-The Boeing Company
Project: NBF-LTST
025.082.311.001
Date Sampled: NA
Date Received: NA

BLANK SPIKE QUALITY CONTROL REPORT

Analyte	Analysis Method	Spike Found	Spike Added	% Recovery	Q
Arsenic	6010B	194	200	97.0%	
Cadmium	6010B	51.1	50.0	102%	
Chromium	6010B	51.4	50.0	103%	
Lead	6010B	196	200	98.0%	
Mercury	7471A	0.51	0.50	102%	

Reported in mg/kg-dry

N-Control limit not met
NA-Not Applicable, Analyte Not Spiked
Control Limits: 80-120%

ANALYTICAL RESOURCES INCORPORATED

INORGANICS ANALYSIS DATA SHEET
TCLP METALS

Sample ID: NBF-SOILSKID-1-072611
SAMPLE

Lab Sample ID: TF62A
LIMS ID: 11-15943
Matrix: Soil
Data Release Authorized:
Reported: 08/01/11

QC Report No: TF62-The Boeing Company
Project: NBF-LTST
025.082.311.001
Date Sampled: 07/26/11
Date Received: 07/26/11

Prep Meth	Prep Date	Analysis Method	Analysis Date	CAS Number	Analyte	RL	mg/L	Q
1311	07/28/11	6010B	07/29/11	7440-38-2	Arsenic	0.2	0.2	U
1311	07/28/11	6010B	07/29/11	**7440-39-3**	**Barium**	0.02	**0.08**	
1311	07/28/11	6010B	07/29/11	7440-43-9	Cadmium	0.01	0.01	U
1311	07/28/11	6010B	07/29/11	7440-47-3	Chromium	0.02	0.02	U
1311	07/28/11	6010B	07/29/11	7439-92-1	Lead	0.1	0.1	U
1311	07/28/11	7470A	07/29/11	7439-97-6	Mercury	0.0001	0.0001	U
1311	07/28/11	6010B	07/29/11	7782-49-2	Selenium	0.2	0.2	U
1311	07/28/11	6010B	07/29/11	7440-22-4	Silver	0.02	0.02	U

U-Analyte undetected at given RL
RL-Reporting Limit

ANALYTICAL RESOURCES INCORPORATED

INORGANICS ANALYSIS DATA SHEET
TCLP METALS

Sample ID: NBF-SOILSKID-1-072611
DUPLICATE

Lab Sample ID: TF62A
LIMS ID: 11-15943
Matrix: Soil
Data Release Authorized:
Reported: 08/01/11

QC Report No: TF62-The Boeing Company
Project: NBF-LTST
025.082.311.001
Date Sampled: 07/26/11
Date Received: 07/26/11

MATRIX DUPLICATE QUALITY CONTROL REPORT

Analyte	Analysis Method	Sample	Duplicate	RPD	Control Limit	Q
Arsenic	6010B	0.2 U	0.2 U	0.0%	+/- 0.2	L
Barium	6010B	0.08	0.08	0.0%	+/- 20%	
Cadmium	6010B	0.01 U	0.01 U	0.0%	+/- 0.01	L
Chromium	6010B	0.02 U	0.02 U	0.0%	+/- 0.02	L
Lead	6010B	0.1 U	0.1 U	0.0%	+/- 0.1	L
Mercury	7470A	0.0001 U	0.0001 U	0.0%	+/- 0.0001	L
Selenium	6010B	0.2 U	0.2 U	0.0%	+/- 0.2	L
Silver	6010B	0.02 U	0.02 U	0.0%	+/- 0.02	L

Reported in mg/L

*-Control Limit Not Met
L-RPD Invalid, Limit = Detection Limit

ANALYTICAL RESOURCES INCORPORATED

INORGANICS ANALYSIS DATA SHEET
TCLP METALS

Sample ID: NBF-SOILSKID-1-072611
MATRIX SPIKE

Lab Sample ID: TF62A
LIMS ID: 11-15943
Matrix: Soil
Data Release Authorized:
Reported: 08/01/11

QC Report No: TF62-The Boeing Company
Project: NBF-LTST
025.082.311.001
Date Sampled: 07/26/11
Date Received: 07/26/11

MATRIX SPIKE QUALITY CONTROL REPORT

Analyte	Analysis Method	Sample	Spike	Spike Added	% Recovery	Q
Arsenic	6010B	0.2 U	4.3	4.0	108%	
Barium	6010B	0.08	4.31	4.00	106%	
Cadmium	6010B	0.01 U	1.15	1.00	115%	
Chromium	6010B	0.02 U	1.09	1.00	109%	
Lead	6010B	0.1 U	4.1	4.0	102%	
Mercury	7470A	0.0001 U	0.0010	0.0010	100%	
Selenium	6010B	0.2 U	4.3	4.0	108%	
Silver	6010B	0.02 U	1.05	1.00	105%	

Reported in mg/L

N-Control Limit Not Met
H-% Recovery Not Applicable, Sample Concentration Too High
NA-Not Applicable, Analyte Not Spiked

Percent Recovery Limits: 75-125%

ANALYTICAL RESOURCES INCORPORATED

INORGANICS ANALYSIS DATA SHEET
TCLP METALS

Sample ID: NBF-SOILSKID-2-072611
SAMPLE

Lab Sample ID: TF62B
LIMS ID: 11-15944
Matrix: Soil
Data Release Authorized:
Reported: 08/01/11

QC Report No: TF62-The Boeing Company
Project: NBF-LTST
025.082.311.001
Date Sampled: 07/26/11
Date Received: 07/26/11

Prep Meth	Prep Date	Analysis Method	Analysis Date	CAS Number	Analyte	RL	mg/L	Q
1311	07/28/11	6010B	07/29/11	7440-38-2	Arsenic	0.2	0.2	U
1311	07/28/11	6010B	07/29/11	**7440-39-3**	**Barium**	0.02	**0.10**	
1311	07/28/11	6010B	07/29/11	7440-43-9	Cadmium	0.01	0.01	U
1311	07/28/11	6010B	07/29/11	7440-47-3	Chromium	0.02	0.02	U
1311	07/28/11	6010B	07/29/11	7439-92-1	Lead	0.1	0.1	U
1311	07/28/11	7470A	07/29/11	7439-97-6	Mercury	0.0001	0.0001	U
1311	07/28/11	6010B	07/29/11	7782-49-2	Selenium	0.2	0.2	U
1311	07/28/11	6010B	07/29/11	7440-22-4	Silver	0.02	0.02	U

U-Analyte undetected at given RL
RL-Reporting Limit

ANALYTICAL RESOURCES INCORPORATED

INORGANICS ANALYSIS DATA SHEET
TCLP METALS

Sample ID: NBF-N111418
SAMPLE

Lab Sample ID: TF62C
LIMS ID: 11-15945
Matrix: Soil
Data Release Authorized
Reported: 08/01/11

QC Report No: TF62-The Boeing Company
Project: NBF-LTST
025.082.311.001
Date Sampled: 07/26/11
Date Received: 07/26/11

Prep Meth	Prep Date	Analysis Method	Analysis Date	CAS Number	Analyte	RL	mg/L	Q
1311	07/28/11	6010B	07/29/11	7440-38-2	Arsenic	0.2	0.2	U
1311	07/28/11	6010B	07/29/11	**7440-39-3**	**Barium**	0.02	**0.06**	
1311	07/28/11	6010B	07/29/11	7440-43-9	Cadmium	0.01	0.01	U
1311	07/28/11	6010B	07/29/11	7440-47-3	Chromium	0.02	0.02	U
1311	07/28/11	6010B	07/29/11	7439-92-1	Lead	0.1	0.1	U
1311	07/28/11	7470A	07/29/11	7439-97-6	Mercury	0.0001	0.0001	U
1311	07/28/11	6010B	07/29/11	7782-49-2	Selenium	0.2	0.2	U
1311	07/28/11	6010B	07/29/11	7440-22-4	Silver	0.02	0.02	U

U-Analyte undetected at given RL
RL-Reporting Limit

ANALYTICAL RESOURCES INCORPORATED

INORGANICS ANALYSIS DATA SHEET
TCLP METALS

Sample ID: NBF-N111420
SAMPLE

Lab Sample ID: TF62D
LIMS ID: 11-15946
Matrix: Soil
Data Release Authorized:
Reported: 08/01/11

QC Report No: TF62-The Boeing Company
Project: NBF-LTST
025.082.311.001
Date Sampled: 07/26/11
Date Received: 07/26/11

Prep Meth	Prep Date	Analysis Method	Analysis Date	CAS Number	Analyte	RL	mg/L	Q
1311	07/28/11	6010B	07/29/11	7440-38-2	Arsenic	0.2	0.2	U
1311	07/28/11	6010B	07/29/11	**7440-39-3**	**Barium**	0.02	**0.08**	
1311	07/28/11	6010B	07/29/11	7440-43-9	Cadmium	0.01	0.01	U
1311	07/28/11	6010B	07/29/11	7440-47-3	Chromium	0.02	0.02	U
1311	07/28/11	6010B	07/29/11	7439-92-1	Lead	0.1	0.1	U
1311	07/28/11	7470A	07/29/11	7439-97-6	Mercury	0.0001	0.0001	U
1311	07/28/11	6010B	07/29/11	7782-49-2	Selenium	0.2	0.2	U
1311	07/28/11	6010B	07/29/11	7440-22-4	Silver	0.02	0.02	U

U-Analyte undetected at given RL
RL-Reporting Limit

ANALYTICAL RESOURCES INCORPORATED

INORGANICS ANALYSIS DATA SHEET
TCLP METALS

Sample ID: METHOD BLANK

Lab Sample ID: TF62MB
LIMS ID: 11-15943
Matrix: Soil
Data Release Authorized:
Reported: 08/01/11

QC Report No: TF62-The Boeing Company
Project: NBF-LTST
025.082.311.001
Date Sampled: NA
Date Received: NA

Prep Meth	Prep Date	Analysis Method	Analysis Date	CAS Number	Analyte	RL	mg/L	Q
1311	07/28/11	6010B	07/29/11	7440-38-2	Arsenic	0.2	0.2	U
1311	07/28/11	6010B	07/29/11	**7440-39-3**	**Barium**	0.02	**0.02**	
1311	07/28/11	6010B	07/29/11	7440-43-9	Cadmium	0.01	0.01	U
1311	07/28/11	6010B	07/29/11	7440-47-3	Chromium	0.02	0.02	U
1311	07/28/11	6010B	07/29/11	7439-92-1	Lead	0.1	0.1	U
1311	07/28/11	7470A	07/29/11	7439-97-6	Mercury	0.0001	0.0001	U
1311	07/28/11	6010B	07/29/11	7782-49-2	Selenium	0.2	0.2	U
1311	07/28/11	6010B	07/29/11	7440-22-4	Silver	0.02	0.02	U

U-Analyte undetected at given RL
RL-Reporting Limit

Analytical Resources, Incorporated
Analytical Chemists and Consultants

August 2, 2011

Jeremy Davis
Landau Associates, Inc.
130 Second Ave
Edmonds, WA 98020

RE: Project: NBF – LTST 025.082.311.001
ARI Job: TG15

Dear Jeremy:

Please find enclosed the Chain of Custody (COC) record, sample receipt documentation, and analytical results for the above referenced project. Analytical Resources, Inc. (ARI) accepted one soil sample in good condition on July 29, 2011. One cooler was received with a temperature of 5.9°C.

The sample was analyzed for PCBs, NWTPH-Dx, NWTPH-Gx and Total Metals, as requested on the COC.

The PCBs method blank surrogates TCMX and DCBP are out of control low. The client was notified and all other surrogate and spike recoveries are in control, therefore the data has been reported.

There were no other irregularities with the sample.

Quality control analysis results are included for your review. Copies of the reports and all associated raw data will be kept on file electronically at ARI. If you have any questions or require additional information, please contact me at your convenience.

Sincerely,
ANALYTICAL RESOURCES, INC

Kelly Bottem
Client Services Manager
(206) 695-6211
kellyb@arilabs.com
www.arilabs.com

cc: Carl Bach, The Boeing Company, P.O. Box 3707, M/S 1W-12, Seattle, WA 98124-2207

4611 South 134th Place, Suite 100 • Tukwila WA 98168 • **206-695-6200** • **206-695-6201** fax

LANDAU ASSOCIATES

☒ Seattle/Edmonds (425) 778-0907
☐ Tacoma (253) 926-2493
☐ Spokane (509) 327-9737
☐ Portland (503) 542-1080
☐ T615

Chain-of-Custody Record

Date 7-29-11
Page 1 of 1

Project Name NBF-LTST-RR
Project No. 0225.082.311.001
Project Location/Event NBF-LTST-RR
Sampler's Name LKM
Project Contact JMD/Carl Bach
Send Results To JMD/Carl Bach/Joe K.

Turnaround Time
☐ Standard
☒ Accelerated
X 3 Days

Testing Parameters

Sample I.D.	Date	Time	Matrix	No. of Containers	MTCA Metals*	PCBs	NWTPH-Gx	NWTPH-Dx
NBF-RR-SS-A-072911	7/29/11	1108	Soil	2	X	X	X	X

Observations/Comments

~~X Allow water samples to settle, collect aliquot from clear portion~~ N/A LKM

~~X NWTPH-Dx: run acid wash/silica gel cleanup~~ Not needed for this soil LKM

___ run samples standardized to _____ product

___ Analyze for EPH if no specific product identified

VOC/BTEX/VPH (soil):
___ non-preserved
___ preserved w/methanol
___ preserved w/sodium bisulfate
___ Freeze upon receipt

___ Dissolved metal water samples field filtered

Other * Arsenic, Cadmium, Chromium, Lead, Mercury

Special Shipment/Handling or Storage Requirements Cooler with ice

Method of Shipment Drop off at ART

Relinquished by	Received by	Relinquished by	Received by
Signature [signature]	Signature [signature]	Signature	Signature
Printed Name Lauren Metrione	Printed Name Will Sollen	Printed Name	Printed Name
Company Landau Associates Inc	Company ART	Company	Company
Date 7-29-11 Time 1248	Date 7/29/11 Time 1:00	Date Time	Date Time

WHITE COPY - Project File YELLOW COPY - Laboratory PINK COPY - Client Representative

Rev 8/09

Analytical Resources, Incorporated
Analytical Chemists and Consultants

Cooler Receipt Form

ARI Client: Boeing

Project Name: NBF-LIST-RR

COC No(s): _____ NA

Delivered by: Fed-Ex UPS Courier Hand Delivered Other: _____

Assigned ARI Job No: TGIS

Tracking No: _____ NA

Preliminary Examination Phase:

Were intact, properly signed and dated custody seals attached to the outside of to cooler?	YES	NO
Were custody papers included with the cooler?	YES	NO
Were custody papers properly filled out (ink, signed, etc.)	YES	NO

Temperature of Cooler(s) (°C) (recommended 2.0-6.0 °C for chemistry)..... 4.1 ~~2.8~~ 4.26 ___ ___ ___ ___

If cooler temperature is out of compliance fill out form 00070F

Temp Gun ID#: 90941609

Cooler Accepted by: KB (AV) Date: 7/29/11 Time: 1300

Complete custody forms and attach all shipping documents

Log-In Phase:

Was a temperature blank included in the cooler?		YES	NO
What kind of packing material was used? ... Bubble Wrap Wet Ice Gel Packs Baggies Foam Block Paper Other: _____			
Was sufficient ice used (if appropriate)?	NA	YES	NO
Were all bottles sealed in individual plastic bags?		YES	NO
Did all bottles arrive in good condition (unbroken)?		YES	NO
Were all bottle labels complete and legible?		YES	NO
Did the number of containers listed on COC match with the number of containers received?		YES	NO
Did all bottle labels and tags agree with custody papers?		YES	NO
Were all bottles used correct for the requested analyses?		YES	NO
Do any of the analyses (bottles) require preservation? (attach preservation sheet, excluding VOCs)...	NA	YES	NO
Were all VOC vials free of air bubbles?	NA	YES	NO
Was sufficient amount of sample sent in each bottle?		YES	NO
Date VOC Trip Blank was made at ARI	NA	_____	

Was Sample Split by ARI : NA YES Date/Time: _____ Equipment: _____ Split by: _____

Samples Logged by: TG Date: 7-29-11 Time: 1311

***** Notify Project Manager of discrepancies or concerns *****

Sample ID on Bottle	Sample ID on COC	Sample ID on Bottle	Sample ID on COC

Additional Notes, Discrepancies, & Resolutions:

By: Date:

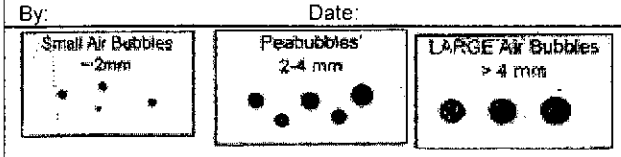

Small → "sm"
Peabubbles → "pb"
Large → "lg"
Headspace → "hs"

Sample ID Cross Reference Report

ANALYTICAL RESOURCES INCORPORATED

ARI Job No: TG15
Client: The Boeing Company
Project Event: 025.082.311.001
Project Name: NBF-LTST-RR

	Sample ID	ARI Lab ID	ARI LIMS ID	Matrix	Sample Date/Time	VTSR
1.	NBF-RR-SS-A-0729111	TG15A	11-16329	Soil	07/29/11 11:08	07/29/11 13:00

Printed 07/29/11

ANALYTICAL RESOURCES INCORPORATED

ORGANICS ANALYSIS DATA SHEET
PCB by GC/ECD Method SW8082

Sample ID: NBF-RR-SS-A-0729111
SAMPLE

Lab Sample ID: TG15A
LIMS ID: 11-16329
Matrix: Soil
Data Release Authorized: VD
Reported: 08/02/11

QC Report No: TG15-The Boeing Company
Project: NBF-LTST-RR
025.082.311.001
Date Sampled: 07/29/11
Date Received: 07/29/11

Date Extracted: 08/01/11
Date Analyzed: 08/01/11 18:36
Instrument/Analyst: ECD5/JGR
GPC Cleanup: No
Sulfur Cleanup: Yes
Acid Cleanup: Yes
Florisil Cleanup: No

Sample Amount: 12.2 g-dry-wt
Final Extract Volume: 4.00 mL
Dilution Factor: 1.00
Silica Gel: No

Percent Moisture: 6.1%

CAS Number	Analyte	RL	Result
12674-11-2	Aroclor 1016	33	< 33 U
53469-21-9	Aroclor 1242	33	< 33 U
12672-29-6	**Aroclor 1248**	**33**	**160**
11097-69-1	Aroclor 1254	49	< 49 Y
11096-82-5	Aroclor 1260	33	< 33 U
11104-28-2	Aroclor 1221	33	< 33 U
11141-16-5	Aroclor 1232	33	< 33 U
37324-23-5	**Aroclor 1262**	**33**	**150**

Reported in µg/kg (ppb)

PCB Surrogate Recovery

Decachlorobiphenyl	97.2%
Tetrachlorometaxylene	88.2%

ANALYTICAL RESOURCES INCORPORATED

SW8082/PCB SOIL/SEDIMENT SURROGATE RECOVERY SUMMARY

Matrix: Soil

QC Report No: TG15-The Boeing Company
Project: NBF-LTST-RR
025.082.311.001

Client ID	DCBP % REC	DCBP LCL-UCL	TCMX % REC	TCMX LCL-UCL	TOT OUT
MB-080111	1.3%*	51-112	0.9%*	46-111	2
LCS-080111	95.5%	51-112	87.5%	46-111	0
LCSD-080111	106%	51-112	95.0%	46-111	0
NBF-RR-SS-A-0729111	97.2%	42-127	88.2%	50-114	0

Microwave (MARS) Control Limits
Prep Method: SW3546
Log Number Range: 11-16329 to 11-16329

FORM-II SW8082

ANALYTICAL RESOURCES INCORPORATED

ORGANICS ANALYSIS DATA SHEET
PCB by GC/ECD Method SW8082

Sample ID: MB-080111
METHOD BLANK

Lab Sample ID: MB-080111
LIMS ID: 11-16329
Matrix: Soil
Data Release Authorized: VD
Reported: 08/02/11

QC Report No: TG15-The Boeing Company
Project: NBF-LTST-RR
025.082.311.001
Date Sampled: NA
Date Received: NA

Date Extracted: 08/01/11
Date Analyzed: 08/01/11 17:39
Instrument/Analyst: ECD5/JGR
GPC Cleanup: No
Sulfur Cleanup: Yes
Acid Cleanup: Yes
Florisil Cleanup: No

Sample Amount: 12.0 g
Final Extract Volume: 4.00 mL
Dilution Factor: 1.00
Silica Gel: No

Percent Moisture: NA

CAS Number	Analyte	RL	Result
12674-11-2	Aroclor 1016	33	< 33 U
53469-21-9	Aroclor 1242	33	< 33 U
12672-29-6	Aroclor 1248	33	< 33 U
11097-69-1	Aroclor 1254	33	< 33 U
11096-82-5	Aroclor 1260	33	< 33 U
11104-28-2	Aroclor 1221	33	< 33 U
11141-16-5	Aroclor 1232	33	< 33 U
37324-23-5	Aroclor 1262	33	< 33 U

Reported in µg/kg (ppb)

PCB Surrogate Recovery

Decachlorobiphenyl	1.3%
Tetrachlorometaxylene	0.9%

ANALYTICAL RESOURCES INCORPORATED

ORGANICS ANALYSIS DATA SHEET
PCB by GC/ECD Method SW8082

Sample ID: LCS-080111
LCS/LCSD

Lab Sample ID: LCS-080111
LIMS ID: 11-16329
Matrix: Soil
Data Release Authorized:
Reported: 08/02/11

QC Report No: TG15-The Boeing Company
Project: NBF-LTST-RR
025.082.311.001
Date Sampled: NA
Date Received: NA

Date Extracted LCS/LCSD: 08/01/11

Date Analyzed LCS: 08/01/11 17:58
LCSD: 08/01/11 18:17
Instrument/Analyst LCS: ECD5/JGR
LCSD: ECD5/JGR
GPC Cleanup: No
Sulfur Cleanup: Yes
Acid Cleanup: Yes
Florisil Cleanup: No

Sample Amount LCS: 12.0 g-dry-wt
LCSD: 12.0 g-dry-wt
Final Extract Volume LCS: 4.00 mL
LCSD: 4.00 mL
Dilution Factor LCS: 1.00
LCSD: 1.00
Silica Gel: No

Percent Moisture: NA

Analyte	LCS	Spike Added-LCS	LCS Recovery	LCSD	Spike Added-LCSD	LCSD Recovery	RPD
Aroclor 1016	135	167	80.8%	147	167	88.0%	8.5%
Aroclor 1260	143	167	85.6%	160	167	95.8%	11.2%

PCB Surrogate Recovery

	LCS	LCSD
Decachlorobiphenyl	95.5%	106%
Tetrachlorometaxylene	87.5%	95.0%

Results reported in µg/kg (ppb)
RPD calculated using sample concentrations per SW846.

ANALYTICAL RESOURCES INCORPORATED

ORGANICS ANALYSIS DATA SHEET
TOTAL DIESEL RANGE HYDROCARBONS
NWTPHD by GC/FID
Page 1 of 1
Matrix: Soil

QC Report No: TG15-The Boeing Company
Project: NBF-LTST-RR
025.082.311.001
Date Received: 07/29/11

Data Release Authorized:
Reported: 08/01/11

ARI ID	Sample ID	Extraction Date	Analysis Date	EFV DL	Range	RL	Result
MB-072911	Method Blank	07/29/11	08/01/11	1.00	Diesel	5.0	< 5.0 U
11-16329	HC ID: ---		FID3B	1.0	Motor Oil	10	< 10 U
					o-Terphenyl		101%
TG15A	NBF-RR-SS-A-0729111	07/29/11	08/01/11	1.00	**Diesel**	**5.1**	**13**
11-16329	HC ID: **DRO/MOTOR OIL**		FID3B	1.0	**Motor Oil**	**10**	**49**
					o-Terphenyl		97.5%

Reported in mg/kg (ppm)

EFV-Effective Final Volume in mL.
DL-Dilution of extract prior to analysis.
RL-Reporting limit.

Diesel quantitation on total peaks in the range from C12 to C24.
Motor Oil quantitation on total peaks in the range from C24 to C38.
HC ID: DRO/RRO indicates results of organics or additional hydrocarbons in ranges are not identifiable.

ANALYTICAL RESOURCES INCORPORATED

TPHD SURROGATE RECOVERY SUMMARY

Matrix: Soil

QC Report No: TG15-The Boeing Company
Project: NBF-LTST-RR
025.082.311.001

Client ID	OTER	TOT OUT
072911MBS	101%	0
072911LCS	95.4%	0
072911LCSD	96.0%	0
NBF-RR-SS-A-0729111	97.5%	0

	LCS/MB LIMITS	QC LIMITS
(OTER) = o-Terphenyl	(50-150)	(50-150)

Prep Method: SW3546
Log Number Range: 11-16329 to 11-16329

FORM-II TPHD

ANALYTICAL RESOURCES INCORPORATED

ORGANICS ANALYSIS DATA SHEET
NWTPHD by GC/FID

Sample ID: LCS-072911
LCS/LCSD

Lab Sample ID: LCS-072911
LIMS ID: 11-16329
Matrix: Soil
Data Release Authorized:
Reported: 08/01/11

QC Report No: TG15-The Boeing Company
Project: NBF-LTST-RR
025.082.311.001
Date Sampled: NA
Date Received: NA

Date Extracted LCS/LCSD: 07/29/11

Date Analyzed LCS: 08/01/11 13:04
LCSD: 08/01/11 13:27
Instrument/Analyst LCS: FID3B/JGR
LCSD: FID3B/JGR

Sample Amount LCS: 10.0 g-dry-wt
LCSD: 10.0 g-dry-wt
Final Extract Volume LCS: 1.0 mL
LCSD: 1.0 mL
Dilution Factor LCS: 1.00
LCSD: 1.00

Range	LCS	Spike Added-LCS	LCS Recovery	LCSD	Spike Added-LCSD	LCSD Recovery	RPD
Diesel	135	150	90.0%	136	150	90.7%	0.7%

TPHD Surrogate Recovery

	LCS	LCSD
o-Terphenyl	95.4%	96.0%

Results reported in mg/kg
RPD calculated using sample concentrations per SW846.

ANALYTICAL RESOURCES INCORPORATED

TOTAL DIESEL RANGE HYDROCARBONS-EXTRACTION REPORT

ARI Job: TG15
Project: NBF-LTST-RR
025.082.311.001

Matrix: Soil
Date Received: 07/29/11

ARI ID	Client ID	Client Amt	Final Vol	Basis	Prep Date
11-16329-072911MB1	Method Blank	10.0 g	1.00 mL	-	07/29/11
11-16329-072911LCS1	Lab Control	10.0 g	1.00 mL	-	07/29/11
11-16329-072911LCSD1	Lab Control Dup	10.0 g	1.00 mL	-	07/29/11
11-16329-TG15A	NBF-RR-SS-A-07291119	19.82 g	1.00 mL	D	07/29/11

Basis: D=Dry Weight W=As Received

ANALYTICAL RESOURCES INCORPORATED

ORGANICS ANALYSIS DATA SHEET
TPHG by Method NWTPHG
Matrix: Soil

Data Release Authorized:
Reported: 08/01/11

QC Report No: TG15-The Boeing Company
Project: NBF-LTST-RR
Event: 025.082.311.001
Date Sampled: 07/29/11
Date Received: 07/29/11

ARI ID	Client ID	Analysis Date	Basis	Range	Result
MB-080111	Method Blank	08/01/11	Dry	Gasoline	< 5.0 U
11-16329		PID1		HC ID	---
				Trifluorotoluene	98.1%
				Bromobenzene	95.3%
TG15A	NBF-RR-SS-A-0729111	08/01/11	Dry	Gasoline	< 5.6 U
11-16329		PID1		HC ID	---
				Trifluorotoluene	110%
				Bromobenzene	107%

Gasoline values reported in mg/kg (ppm)

Quantitation on total peaks in the gasoline range from Toluene to Naphthalene.

GAS: Indicates the presence of gasoline or weathered gasoline.
GRO: Positive result that does not match an identifiable gasoline pattern.

Results corrected for soil moisture content per Section 11.10.5 of EPA Method 8000C.

ANALYTICAL RESOURCES INCORPORATED

TPHG SOIL SURROGATE RECOVERY SUMMARY

ARI Job: TG15
Matrix: Soil

QC Report No: TG15-The Boeing Company
Project: NBF-LTST-RR
Event: 025.082.311.001

Client ID	BFB	TFT	BBZ	TOT OUT
MB-080111	NA	98.1%	95.3%	0
LCS-080111	NA	107%	101%	0
LCSD-080111	NA	107%	101%	0
NBF-RR-SS-A-0729111	NA	110%	107%	0

	LCS/MB LIMITS	QC LIMITS
(BFB) = Bromofluorobenzene	(70-130)	(70-130)
(TFT) = Trifluorotoluene	(80-120)	(66-123)
(BBZ) = Bromobenzene	(80-120)	(62-130)

Log Number Range: 11-16329 to 11-16329

FORM II TPHG

ANALYTICAL RESOURCES INCORPORATED

ORGANICS ANALYSIS DATA SHEET
TPHG by Method NWTPHG

Sample ID: LCS-080111
LAB CONTROL SAMPLE

Lab Sample ID: LCS-080111
LIMS ID: 11-16329
Matrix: Soil
Data Release Authorized:
Reported: 08/01/11

QC Report No: TG15-The Boeing Company
Project: NBF-LTST-RR
Event: 025.082.311.001
Date Sampled: NA
Date Received: NA

Date Analyzed LCS: 08/01/11 06:27
LCSD: 08/01/11 06:56
Instrument/Analyst LCS: PID1/MH
LCSD: PID1/MH

Purge Volume: 5.0 mL

Sample Amount LCS: 100 mg-dry-wt
LCSD: 100 mg-dry-wt

Analyte	LCS	Spike Added-LCS	LCS Recovery	LCSD	Spike Added-LCSD	LCSD Recovery	RPD
Gasoline Range Hydrocarbons	49.6	50.0	99.2%	47.6	50.0	95.2%	4.1%

Reported in mg/kg (ppm)

RPD calculated using sample concentrations per SW846.

TPHG Surrogate Recovery

	LCS	LCSD
Trifluorotoluene	107%	107%
Bromobenzene	101%	101%

ANALYTICAL RESOURCES INCORPORATED

INORGANICS ANALYSIS DATA SHEET
TOTAL METALS

Sample ID: NBF-RR-SS-A-0729111
SAMPLE

Lab Sample ID: TG15A
LIMS ID: 11-16329
Matrix: Soil
Data Release Authorized:
Reported: 08/02/11

QC Report No: TG15-The Boeing Company
Project: NBF-LTST-RR
025.082.311.001
Date Sampled: 07/29/11
Date Received: 07/29/11

Percent Total Solids: 93.4%

Prep Meth	Prep Date	Analysis Method	Analysis Date	CAS Number	Analyte	RL	mg/kg-dry	Q
3050B	08/01/11	6010B	08/01/11	7440-38-2	Arsenic	5	5	U
3050B	08/01/11	6010B	08/01/11	**7440-43-9**	**Cadmium**	0.2	**0.3**	
3050B	08/01/11	6010B	08/01/11	**7440-47-3**	**Chromium**	0.5	**14.5**	
3050B	08/01/11	6010B	08/01/11	**7439-92-1**	**Lead**	2	**11**	
CLP	08/01/11	7471A	08/01/11	**7439-97-6**	**Mercury**	0.03	**0.03**	

U-Analyte undetected at given RL
RL-Reporting Limit

ANALYTICAL RESOURCES INCORPORATED

INORGANICS ANALYSIS DATA SHEET
TOTAL METALS

Sample ID: METHOD BLANK

Lab Sample ID: TG15MB
LIMS ID: 11-16329
Matrix: Soil
Data Release Authorized:
Reported: 08/02/11

QC Report No: TG15-The Boeing Company
Project: NBF-LTST-RR
025.082.311.001
Date Sampled: NA
Date Received: NA

Percent Total Solids: NA

Prep Meth	Prep Date	Analysis Method	Analysis Date	CAS Number	Analyte	RL	mg/kg-dry	Q
3050B	08/01/11	6010B	08/01/11	7440-38-2	Arsenic	5	5	U
3050B	08/01/11	6010B	08/01/11	7440-43-9	Cadmium	0.2	0.2	U
3050B	08/01/11	6010B	08/01/11	7440-47-3	Chromium	0.5	0.5	U
3050B	08/01/11	6010B	08/01/11	7439-92-1	Lead	2	2	U
CLP	08/01/11	7471A	08/01/11	7439-97-6	Mercury	0.02	0.02	U

U-Analyte undetected at given RL
RL-Reporting Limit

ANALYTICAL RESOURCES INCORPORATED

INORGANICS ANALYSIS DATA SHEET
TOTAL METALS

Sample ID: LAB CONTROL

Lab Sample ID: TG15LCS
LIMS ID: 11-16329
Matrix: Soil
Data Release Authorized:
Reported: 08/02/11

QC Report No: TG15-The Boeing Company
Project: NBF-LTST-RR
025.082.311.001
Date Sampled: NA
Date Received: NA

BLANK SPIKE QUALITY CONTROL REPORT

Analyte	Analysis Method	Spike Found	Spike Added	% Recovery	Q
Arsenic	6010B	209	200	104%	
Cadmium	6010B	53.9	50.0	108%	
Chromium	6010B	54.2	50.0	108%	
Lead	6010B	208	200	104%	
Mercury	7471A	0.50	0.50	100%	

Reported in mg/kg-dry

N-Control limit not met
NA-Not Applicable, Analyte Not Spiked
Control Limits: 80-120%

Analytical Resources, Incorporated
Analytical Chemists and Consultants

August 12, 2011

Jeremy Davis
Landau Associates, Inc.
130 Second Ave
Edmonds, WA 98020

RE: Project: NBF – LTST 025.082.311.001
ARI Job: TH79

Dear Jeremy:

Please find enclosed the Chain of Custody (COC) record, sample receipt documentation, and analytical results for the above referenced project. Analytical Resources, Inc. (ARI) accepted one soil sample in good condition on August 9, 2011. One cooler was received with a temperature of 11.0°C.

The sample was analyzed for PCBs, NWTPH-Dx, NWTPH-Gx and Total Metals, as requested on the COC.

There were no irregularities with the sample.

Quality control analysis results are included for your review. Copies of the reports and all associated raw data will be kept on file electronically at ARI. If you have any questions or require additional information, please contact me at your convenience.

Sincerely,
ANALYTICAL RESOURCES, INC

Kelly Bottem
Client Services Manager
(206) 695-6211
kellyb@arilabs.com
www.arilabs.com

cc: Carl Bach, The Boeing Company, P.O. Box 3707, M/S 1W-12, Seattle, WA 98124-2207

4611 South 134th Place, Suite 100 • Tukwila WA 98168 • **206-695-6200** • **206-695-6201** fax

Chain of Custody Record & Laboratory Analysis Request

ARI Assigned Number: T1179	Turn-around Requested: 3 DAY
ARI Client Company: BOEING	Phone: 206-601-7614
Client Contact: Jeremy D, Carl B, Joe Kalmar	
Client Project Name: NBF-LTST	
Client Project #: 625.082.311.001	Samplers: Jeremy Davis

Page: 1	of 1
Date: 8/9/11	Ice Present? Y
No. of Coolers: 1	Cooler Temps: 11.0

Analytical Resources, Incorporated
Analytical Chemists and Consultants
4611 South 134th Place, Suite 100
Tukwila, WA 98168
206-695-6200 206-695-6201 (fax)

Sample ID	Date	Time	Matrix	No. Containers	PCBs	NWTPH-Dx	NWTPH-Gx	MTCA-5 Metals *					Notes/Comments
NBF-RRSS-A-080911	8/9/11	1145	S	2	✓	✓	✓	✓					

Comments/Special Instructions	Relinquished by:	Received by:	Relinquished by:	Received by:
* Arsenic, Cadmium, Chromium, Lead, Mercury	(Signature)	(Signature)	(Signature)	(Signature)
	Printed Name: Jeremy Davis	Printed Name: A. Volgardsen	Printed Name:	Printed Name:
	Company: LAI	Company: ARI	Company:	Company:
	Date & Time: 8/9/11 1400	Date & Time: 8/9/11 1400	Date & Time:	Date & Time:

Limits of Liability: *ARI will perform all requested services in accordance with appropriate methodology following ARI Standard Operating Procedures and the ARI Quality Assurance Program. This program meets standards for the industry. The total liability of ARI, its officers, agents, employees, or successors, arising out of or in connection with the requested services, shall not exceed the Invoiced amount for said services. The acceptance by the client of a proposal for services by ARI release ARI from any liability in excess thereof, not withstanding any provision to the contrary in any contract, purchase order or co-signed agreement between ARI and the Client.*

Sample Retention Policy: All samples submitted to ARI will be appropriately discarded no sooner than 90 days after receipt or 60 days after submission of hardcopy data, whichever is longer, unless alternate retention schedules have been established by work-order or contract.

Analytical Resources, Incorporated
Analytical Chemists and Consultants

Cooler Temperature Compliance Form

Cooler#: TH79	Temperature(°C): 11.0	
Sample ID	**Bottle Count**	**Bottle Type**
NBF-RRSS-A-080911	2	1 2oz, 1 16oz

Cooler#:	Temperature(°C):	
Sample ID	**Bottle Count**	**Bottle Type**

Cooler#:	Temperature(°C):	
Sample ID	**Bottle Count**	**Bottle Type**

Cooler#:	Temperature(°C):	
Sample ID	**Bottle Count**	**Bottle Type**

Completed by: KV Date: 8/9/11 Time: 1445

Analytical Resources, Incorporated
Analytical Chemists and Consultants

Cooler Receipt Form

ARI Client: Boeing
Project Name: NBF-LTST
COC No(s): _____ (NA)
Delivered by: Fed-Ex UPS Courier Hand Delivered Other: _____
Assigned ARI Job No: TH79
Tracking No: _____ (NA)

Preliminary Examination Phase:

Were intact, properly signed and dated custody seals attached to the outside of to cooler?	(YES)	NO
Were custody papers included with the cooler?	(YES)	NO
Were custody papers properly filled out (ink, signed, etc.)	(YES)	NO

Temperature of Cooler(s) (°C) (recommended 2.0-6.0 °C for chemistry) 11.0 ___ ___ ___ ___
If cooler temperature is out of compliance fill out form 00070F
Temp Gun ID#: 909411619

Cooler Accepted by: AV Date: 8/9/11 Time: 1400

Complete custody forms and attach all shipping documents

Log-In Phase:

Was a temperature blank included in the cooler?		YES	(NO)
What kind of packing material was used?	(Bubble Wrap) (Wet Ice) Gel Packs Baggies Foam Block Paper Other: _____		
Was sufficient ice used (if appropriate)?	NA	YES	(NO)
Were all bottles sealed in individual plastic bags?		YES	(NO)
Did all bottles arrive in good condition (unbroken)?		(YES)	NO
Were all bottle labels complete and legible?		(YES)	NO
Did the number of containers listed on COC match with the number of containers received?		(YES)	NO
Did all bottle labels and tags agree with custody papers?		(YES)	NO
Were all bottles used correct for the requested analyses?		(YES)	NO
Do any of the analyses (bottles) require preservation? (attach preservation sheet, excluding VOCs)	(NA)	YES	NO
Were all VOC vials free of air bubbles?	(NA)	YES	NO
Was sufficient amount of sample sent in each bottle?		(YES)	NO
Date VOC Trip Blank was made at ARI	(NA)	_____	

Was Sample Split by ARI : (NA) YES Date/Time: _____ Equipment: _____ Split by: _____

Samples Logged by: AV Date: 8/9/11 Time: 1445

***** Notify Project Manager of discrepancies or concerns *****

Sample ID on Bottle	Sample ID on COC	Sample ID on Bottle	Sample ID on COC

Additional Notes, Discrepancies, & Resolutions:

By: Date:

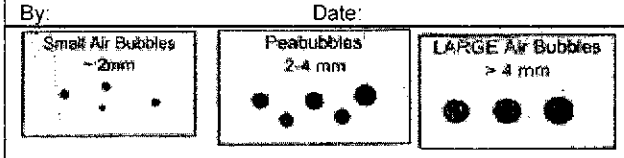

Small → "sm"	
Peabubbles → "pb"	
Large → "lg"	
Headspace → "hs"	

Sample ID Cross Reference Report

ANALYTICAL RESOURCES INCORPORATED

ARI Job No: TH79
Client: The Boeing Company
Project Event: 025.082.311.001
Project Name: NBF-LTST

	Sample ID	ARI Lab ID	ARI LIMS ID	Matrix	Sample Date/Time	VTSR
1.	NBF-RRSS-A-080911	TH79A	11-17319	Soil	08/09/11 11:45	08/09/11 14:00

Printed 08/09/11

ANALYTICAL RESOURCES INCORPORATED

ORGANICS ANALYSIS DATA SHEET
PCB by GC/ECD Method SW8082

Sample ID: NBF-RRSS-A-080911
SAMPLE

Lab Sample ID: TH79A
LIMS ID: 11-17319
Matrix: Soil
Data Release Authorized:
Reported: 08/12/11

QC Report No: TH79-The Boeing Company
Project: NBF-LTST
025.082.311.001
Date Sampled: 08/09/11
Date Received: 08/09/11

Date Extracted: 08/10/11
Date Analyzed: 08/11/11 14:44
Instrument/Analyst: ECD5/JGR
GPC Cleanup: No
Sulfur Cleanup: Yes
Acid Cleanup: Yes
Florisil Cleanup: No

Sample Amount: 12.6 g-dry-wt
Final Extract Volume: 4.00 mL
Dilution Factor: 1.00
Silica Gel: No

Percent Moisture: 5.1%

CAS Number	Analyte	RL	Result
12674-11-2	Aroclor 1016	32	< 32 U
53469-21-9	Aroclor 1242	32	< 32 U
12672-29-6	Aroclor 1248	32	< 32 U
11097-69-1	Aroclor 1254	32	< 32 U
11096-82-5	Aroclor 1260	32	< 32 U
11104-28-2	Aroclor 1221	32	< 32 U
11141-16-5	Aroclor 1232	32	< 32 U
37324-23-5	Aroclor 1262	32	< 32 U

Reported in µg/kg (ppb)

PCB Surrogate Recovery

Decachlorobiphenyl	72.5%
Tetrachlorometaxylene	84.5%

ANALYTICAL RESOURCES INCORPORATED

ORGANICS ANALYSIS DATA SHEET
PCB by GC/ECD Method SW8082

Sample ID: MB-081011
METHOD BLANK

Lab Sample ID: MB-081011
LIMS ID: 11-17319
Matrix: Soil
Data Release Authorized:
Reported: 08/12/11

QC Report No: TH79-The Boeing Company
Project: NBF-LTST
025.082.311.001
Date Sampled: NA
Date Received: NA

Date Extracted: 08/10/11
Date Analyzed: 08/11/11 13:47
Instrument/Analyst: ECD5/JGR
GPC Cleanup: No
Sulfur Cleanup: Yes
Acid Cleanup: Yes
Florisil Cleanup: No

Sample Amount: 12.0 g
Final Extract Volume: 4.00 mL
Dilution Factor: 1.00
Silica Gel: No

Percent Moisture: NA

CAS Number	Analyte	RL	Result
12674-11-2	Aroclor 1016	33	< 33 U
53469-21-9	Aroclor 1242	33	< 33 U
12672-29-6	Aroclor 1248	33	< 33 U
11097-69-1	Aroclor 1254	33	< 33 U
11096-82-5	Aroclor 1260	33	< 33 U
11104-28-2	Aroclor 1221	33	< 33 U
11141-16-5	Aroclor 1232	33	< 33 U
37324-23-5	Aroclor 1262	33	< 33 U

Reported in µg/kg (ppb)

PCB Surrogate Recovery

Decachlorobiphenyl	77.2%
Tetrachlorometaxylene	87.0%

ANALYTICAL RESOURCES INCORPORATED

SW8082/PCB SOIL/SEDIMENT SURROGATE RECOVERY SUMMARY

Matrix: Soil

QC Report No: TH79-The Boeing Company
Project: NBF-LTST
025.082.311.001

Client ID	DCBP % REC	DCBP LCL-UCL	TCMX % REC	TCMX LCL-UCL	TOT OUT
MB-081011	77.2%	51-112	87.0%	46-111	0
LCS-081011	74.2%	51-112	84.5%	46-111	0
LCSD-081011	88.5%	51-112	89.0%	46-111	0
NBF-RRSS-A-080911	72.5%	42-127	84.5%	50-114	0

Microwave (MARS) Control Limits
Prep Method: SW3546
Log Number Range: 11-17319 to 11-17319

FORM-II SW8082

ANALYTICAL RESOURCES INCORPORATED

ORGANICS ANALYSIS DATA SHEET
PCB by GC/ECD Method SW8082

Sample ID: LCS-081011
LCS/LCSD

Lab Sample ID: LCS-081011
LIMS ID: 11-17319
Matrix: Soil
Data Release Authorized:
Reported: 08/12/11

QC Report No: TH79-The Boeing Company
Project: NBF-LTST
025.082.311.001
Date Sampled: NA
Date Received: NA

Date Extracted LCS/LCSD: 08/10/11

Date Analyzed LCS: 08/11/11 14:06
LCSD: 08/11/11 14:25
Instrument/Analyst LCS: ECD5/JGR
LCSD: ECD5/JGR
GPC Cleanup: No
Sulfur Cleanup: Yes
Acid Cleanup: Yes
Florisil Cleanup: No

Sample Amount LCS: 12.0 g-dry-wt
LCSD: 12.0 g-dry-wt
Final Extract Volume LCS: 4.00 mL
LCSD: 4.00 mL
Dilution Factor LCS: 1.00
LCSD: 1.00
Silica Gel: No

Percent Moisture: NA

Analyte	LCS	Spike Added-LCS	LCS Recovery	LCSD	Spike Added-LCSD	LCSD Recovery	RPD
Aroclor 1016	143	167	85.6%	146	167	87.4%	2.1%
Aroclor 1260	123	167	73.7%	145	167	86.8%	16.4%

PCB Surrogate Recovery

	LCS	LCSD
Decachlorobiphenyl	74.2%	88.5%
Tetrachlorometaxylene	84.5%	89.0%

Results reported in µg/kg (ppb)
RPD calculated using sample concentrations per SW846.

ANALYTICAL RESOURCES INCORPORATED

ORGANICS ANALYSIS DATA SHEET
TPHG by Method NWTPHG
Matrix: Soil

Data Release Authorized:
Reported: 08/11/11

QC Report No: TH79-The Boeing Company
Project: NBF-LTST
Event: 025.082.311.001
Date Sampled: 08/09/11
Date Received: 08/09/11

ARI ID	Client ID	Analysis Date	Basis	Range	Result
MB-081011	Method Blank	08/10/11	Dry	Gasoline	< 5.0 U
11-17319		PID1		HC ID	---
				Trifluorotoluene	96.4%
				Bromobenzene	97.6%
TH79A	NBF-RRSS-A-080911	08/10/11	Dry	Gasoline	< 5.4 U
11-17319		PID1		HC ID	---
				Trifluorotoluene	103%
				Bromobenzene	101%

Gasoline values reported in mg/kg (ppm)

Quantitation on total peaks in the gasoline range from Toluene to Naphthalene.

GAS: Indicates the presence of gasoline or weathered gasoline.
GRO: Positive result that does not match an identifiable gasoline pattern.

Results corrected for soil moisture content per Section 11.10.5 of EPA Method 8000C.

ANALYTICAL RESOURCES INCORPORATED

TPHG SOIL SURROGATE RECOVERY SUMMARY

ARI Job: TH79
Matrix: Soil

QC Report No: TH79-The Boeing Company
Project: NBF-LTST
Event: 025.082.311.001

Client ID	BFB	TFT	BBZ	TOT OUT
MB-081011	NA	96.4%	97.6%	0
LCS-081011	NA	102%	96.5%	0
LCSD-081011	NA	101%	95.1%	0
NBF-RRSS-A-080911	NA	103%	101%	0

	LCS/MB LIMITS	QC LIMITS
(BFB) = Bromofluorobenzene	(70-130)	(70-130)
(TFT) = Trifluorotoluene	(80-120)	(66-123)
(BBZ) = Bromobenzene	(80-120)	(62-130)

Log Number Range: 11-17319 to 11-17319

FORM II TPHG

ANALYTICAL RESOURCES INCORPORATED

ORGANICS ANALYSIS DATA SHEET
TPHG by Method NWTPHG

Sample ID: LCS-081011
LAB CONTROL SAMPLE

Lab Sample ID: LCS-081011
LIMS ID: 11-17319
Matrix: Soil
Data Release Authorized:
Reported: 08/11/11

QC Report No: TH79-The Boeing Company
Project: NBF-LTST
Event: 025.082.311.001
Date Sampled: NA
Date Received: NA

Date Analyzed LCS: 08/10/11 06:50
LCSD: 08/10/11 07:26
Instrument/Analyst LCS: PID1/MH
LCSD: PID1/MH

Purge Volume: 5.0 mL

Sample Amount LCS: 100 mg-dry-wt
LCSD: 100 mg-dry-wt

Analyte	LCS	Spike Added-LCS	LCS Recovery	LCSD	Spike Added-LCSD	LCSD Recovery	RPD
Gasoline Range Hydrocarbons	50.4	50.0	101%	49.1	50.0	98.2%	2.6%

Reported in mg/kg (ppm)

RPD calculated using sample concentrations per SW846.

TPHG Surrogate Recovery

	LCS	LCSD
Trifluorotoluene	102%	101%
Bromobenzene	96.5%	95.1%

ANALYTICAL RESOURCES INCORPORATED

ORGANICS ANALYSIS DATA SHEET
TOTAL DIESEL RANGE HYDROCARBONS
NWTPHD by GC/FID
Page 1 of 1
Matrix: Soil

QC Report No: TH79-The Boeing Company
Project: NBF-LTST
025.082.311.001
Date Received: 08/09/11

Data Release Authorized:
Reported: 08/10/11

ARI ID	Sample ID	Extraction Date	Analysis Date	EFV DL	Range	RL	Result
MB-080911	Method Blank	08/09/11	08/10/11	1.00	Diesel	5.0	< 5.0 U
11-17319	HC ID: ---		FID3B	1.0	Motor Oil	10	< 10 U
					o-Terphenyl		96.9%
TH79A	NBF-RRSS-A-080911	08/09/11	08/10/11	1.00	**Diesel**	**5.1**	**8.5**
11-17319	HC ID: **DRO/MOTOR OIL**		FID3B	1.0	**Motor Oil**	**10**	**26**
					o-Terphenyl		76.8%

Reported in mg/kg (ppm)

EFV-Effective Final Volume in mL.
DL-Dilution of extract prior to analysis.
RL-Reporting limit.

Diesel quantitation on total peaks in the range from C12 to C24.
Motor Oil quantitation on total peaks in the range from C24 to C38.
HC ID: DRO/RRO indicates results of organics or additional hydrocarbons in ranges are not identifiable.

ANALYTICAL RESOURCES INCORPORATED

TPHD SURROGATE RECOVERY SUMMARY

Matrix: Soil

QC Report No: TH79-The Boeing Company
Project: NBF-LTST
025.082.311.001

Client ID	OTER	TOT OUT
080911MBS	96.9%	0
080911LCS	91.2%	0
080911LCSD	80.0%	0
NBF-RRSS-A-080911	76.8%	0

	LCS/MB LIMITS	QC LIMITS
(OTER) = o-Terphenyl	(50-150)	(50-150)

Prep Method: SW3546
Log Number Range: 11-17319 to 11-17319

FORM-II TPHD

ANALYTICAL RESOURCES INCORPORATED

ORGANICS ANALYSIS DATA SHEET
NWTPHD by GC/FID

Sample ID: LCS-080911
LCS/LCSD

Lab Sample ID: LCS-080911
LIMS ID: 11-17319
Matrix: Soil
Data Release Authorized:
Reported: 08/10/11

QC Report No: TH79-The Boeing Company
Project: NBF-LTST
025.082.311.001
Date Sampled: NA
Date Received: NA

Date Extracted LCS/LCSD: 08/09/11

Date Analyzed LCS: 08/10/11 13:48
LCSD: 08/10/11 14:11
Instrument/Analyst LCS: FID3B/MS
LCSD: FID3B/MS

Sample Amount LCS: 10.0 g-dry-wt
LCSD: 10.0 g-dry-wt
Final Extract Volume LCS: 1.0 mL
LCSD: 1.0 mL
Dilution Factor LCS: 1.00
LCSD: 1.00

Range	LCS	Spike Added-LCS	LCS Recovery	LCSD	Spike Added-LCSD	LCSD Recovery	RPD
Diesel	137	150	91.3%	132	150	88.0%	3.7%

TPHD Surrogate Recovery

	LCS	LCSD
o-Terphenyl	91.2%	80.0%

Results reported in mg/kg
RPD calculated using sample concentrations per SW846.

ANALYTICAL RESOURCES INCORPORATED

TOTAL DIESEL RANGE HYDROCARBONS-EXTRACTION REPORT

ARI Job: TH79
Project: NBF-LTST
025.082.311.001

Matrix: Soil
Date Received: 08/09/11

ARI ID	Client ID	Client Amt	Final Vol	Basis	Prep Date
11-17319-080911MB1	Method Blank	10.0 g	1.00 mL	-	08/09/11
11-17319-080911LCS1	Lab Control	10.0 g	1.00 mL	-	08/09/11
11-17319-080911LCSD1	Lab Control Dup	10.0 g	1.00 mL	-	08/09/11
11-17319-TH79A	NBF-RRSS-A-080911	9.77 g	1.00 mL	D	08/09/11

Basis: D=Dry Weight W=As Received

ANALYTICAL RESOURCES INCORPORATED

INORGANICS ANALYSIS DATA SHEET
TOTAL METALS

Sample ID: NBF-RRSS-A-080911
SAMPLE

Lab Sample ID: TH79A
LIMS ID: 11-17319
Matrix: Soil
Data Release Authorized:
Reported: 08/12/11

QC Report No: TH79-The Boeing Company
Project: NBF-LTST
025.082.311.001
Date Sampled: 08/09/11
Date Received: 08/09/11

Percent Total Solids: 95.1%

Prep Meth	Prep Date	Analysis Method	Analysis Date	CAS Number	Analyte	RL	mg/kg-dry	Q
3050B	08/10/11	6010B	08/11/11	7440-38-2	Arsenic	5	5	U
3050B	08/10/11	6010B	08/11/11	7440-43-9	Cadmium	0.2	0.2	U
3050B	08/10/11	6010B	08/11/11	**7440-47-3**	**Chromium**	0.5	**10.7**	
3050B	08/10/11	6010B	08/11/11	**7439-92-1**	**Lead**	2	**7**	
CLP	08/10/11	7471A	08/11/11	7439-97-6	Mercury	0.02	0.02	U

U-Analyte undetected at given RL
RL-Reporting Limit

ANALYTICAL RESOURCES INCORPORATED

INORGANICS ANALYSIS DATA SHEET
TOTAL METALS

Sample ID: METHOD BLANK

Lab Sample ID: TH79MB
LIMS ID: 11-17319
Matrix: Soil
Data Release Authorized:
Reported: 08/12/11

QC Report No: TH79-The Boeing Company
Project: NBF-LTST
025.082.311.001
Date Sampled: NA
Date Received: NA

Percent Total Solids: NA

Prep Meth	Prep Date	Analysis Method	Analysis Date	CAS Number	Analyte	RL	mg/kg-dry	Q
3050B	08/10/11	6010B	08/11/11	7440-38-2	Arsenic	5	5	U
3050B	08/10/11	6010B	08/11/11	7440-43-9	Cadmium	0.2	0.2	U
3050B	08/10/11	6010B	08/11/11	7440-47-3	Chromium	0.5	0.5	U
3050B	08/10/11	6010B	08/11/11	7439-92-1	Lead	2	2	U
CLP	08/10/11	7471A	08/11/11	7439-97-6	Mercury	0.02	0.02	U

U-Analyte undetected at given RL
RL-Reporting Limit

ANALYTICAL RESOURCES INCORPORATED

INORGANICS ANALYSIS DATA SHEET
TOTAL METALS

Sample ID: LAB CONTROL

Lab Sample ID: TH79LCS
LIMS ID: 11-17319
Matrix: Soil
Data Release Authorized:
Reported: 08/12/11

QC Report No: TH79-The Boeing Company
Project: NBF-LTST
025.082.311.001
Date Sampled: NA
Date Received: NA

BLANK SPIKE QUALITY CONTROL REPORT

Analyte	Analysis Method	Spike Found	Spike Added	% Recovery	Q
Arsenic	6010B	199	200	99.5%	
Cadmium	6010B	49.4	50.0	98.8%	
Chromium	6010B	51.0	50.0	102%	
Lead	6010B	193	200	96.5%	
Mercury	7471A	0.52	0.50	104%	

Reported in mg/kg-dry

N-Control limit not met
NA-Not Applicable, Analyte Not Spiked
Control Limits: 80-120%

Analytical Resources, Incorporated
Analytical Chemists and Consultants

August 15, 2011

Jeremy Davis
Landau Associates, Inc.
130 Second Ave
Edmonds, WA 98020

RE: Project: NBF – LTST 025.082.311.001
ARI Job: TI03

Dear Jeremy:

Please find enclosed the Chain of Custody (COC) record, sample receipt documentation, and analytical results for the above referenced project. Analytical Resources, Inc. (ARI) accepted one soil sample and two water samples in good condition on August 10, 2011. One cooler was received with a temperature of 9.8°C.

The samples were analyzed for PCBs, NWTPH-Dx, NWTPH-Gx and Total Metals, as requested on the COC.

There were no irregularities with the samples.

Quality control analysis results are included for your review. Copies of the reports and all associated raw data will be kept on file electronically at ARI. If you have any questions or require additional information, please contact me at your convenience.

Sincerely,
ANALYTICAL RESOURCES, INC

Kelly Bottem
Client Services Manager
(206) 695-6211
kellyb@arilabs.com
www.arilabs.com

cc: Carl Bach, The Boeing Company, P.O. Box 3707, M/S 1W-12, Seattle, WA 98124-2207

4611 South 134th Place, Suite 100 • Tukwila WA 98168 • **206-695-6200** • **206-695-6201** fax

☒ Seattle/Edmonds (425) 778-0907
☐ Tacoma (253) 926-2493
☐ Spokane (509) 327-9737
☐ Portland (503) 542-1080
☐ _____

LANDAU ASSOCIATES

Chain-of-Custody Record

Date 8/10/11
Page 1 of 1

Project Name NBF
Project No. 025.082.311.001
Project Location/Event NBF-LTST / DTS
Sampler's Name JEREMY DAVIS
Project Contact Jeremy D Carl B, Joe K.
Send Results To Same as Above

Turnaround Time
☐ Standard
☒ Accelerated
3 DAYS

Testing Parameters

Sample I.D.	Date	Time	Matrix	No. of Containers	MTCA PCBs	PCBs	NWTPH-Dx	NWTPH-Gx	Metals (MTCA-5)	Observations/Comments
NBF-RRSS-A-081011	8/10/11	1015	S	2		X	X	X	X	
NBF-DTS-A-081011	"	0940	W	2	X					
NBF-DTS-B-081011	"	0945	W	2	X					

X ~~Allow water samples to settle, collect aliquot from clear portion~~ SMD
X ~~NWTPH-Dx run acid wash/silica gel cleanup~~ SMD
Not Nec.

___ run samples standardized to _____ product

___ Analyze for EPH if no specific product identified

VOC/BTEX/VPH (soil):
___ non-preserved
___ preserved w/methanol
___ preserved w/sodium bisulfate
___ Freeze upon receipt

___ Dissolved metal water samples field filtered

Other Arsenic, Cadmium, Chromium, Mercury, Lead

Special Shipment/Handling or Storage Requirements Cooler w/ Wet ICE

Method of Shipment DROP OFF AT ARI

Relinquished by	Received by	Relinquished by	Received by
Signature JEREMY DAVIS	Signature A. Volgardsen	Signature	Signature
Printed Name LAI	Printed Name ARI	Printed Name	Printed Name
Company	Company	Company	Company
Date 8/10/11 Time 1145	Date 8/10/11 Time 1145	Date ____ Time ____	Date ____ Time ____

WHITE COPY - Project File YELLOW COPY - Laboratory PINK COPY - Client Representative

Rev 8/09

Sample ID Cross Reference Report

ANALYTICAL RESOURCES INCORPORATED

ARI Job No: TI03
Client: The Boeing Company
Project Event: 025.082.311.001
Project Name: NBF-LTST/DTS

	Sample ID	ARI Lab ID	ARI LIMS ID	Matrix	Sample Date/Time	VTSR
1.	NBF-RRSS-A-081011	TI03A	11-17425	Soil	08/09/11 10:15	08/10/11 11:45
2.	NBF-DTS-A-081011	TI03B	11-17426	Water	08/09/11 09:40	08/10/11 11:45
3.	NBF-DTS-B-081011	TI03C	11-17427	Water	08/09/11 09:45	08/10/11 11:45

Printed 08/10/11

Analytical Resources, Incorporated
Analytical Chemists and Consultants

Cooler Receipt Form

ARI Client: Boeing

Project Name: NBF-LTST/DTS

COC No(s): _____ (NA)

Delivered by: Fed-Ex UPS Courier Hand Delivered Other _____

Assigned ARI Job No: TJ03

Tracking No: _____ NA

Preliminary Examination Phase:

Were intact, properly signed and dated custody seals attached to the outside of to cooler?	YES	NO
Were custody papers included with the cooler?	YES	NO
Were custody papers properly filled out (ink, signed, etc.)	YES	NO

Temperature of Cooler(s) (°C) (recommended 2.0-6.0 °C for chemistry): 9.8

If cooler temperature is out of compliance fill out form 00070F

Temp Gun ID#: 90941619

Cooler Accepted by: AV Date: 8/10/11 Time: 1145

Complete custody forms and attach all shipping documents

Log-In Phase:

Was a temperature blank included in the cooler?		YES	NO
What kind of packing material was used?	Bubble Wrap, Wet Ice, Gel Packs, Baggies, Foam Block, Paper, Other:		
Was sufficient ice used (if appropriate)?	NA	YES	NO
Were all bottles sealed in individual plastic bags?		YES	NO
Did all bottles arrive in good condition (unbroken)?		YES	NO
Were all bottle labels complete and legible?		YES	NO
Did the number of containers listed on COC match with the number of containers received?		YES	NO
Did all bottle labels and tags agree with custody papers?		YES	NO
Were all bottles used correct for the requested analyses?		YES	NO
Do any of the analyses (bottles) require preservation? (attach preservation sheet, excluding VOCs)	NA	YES	NO
Were all VOC vials free of air bubbles?	NA	YES	~~NO~~ JM
Was sufficient amount of sample sent in each bottle?		YES	NO
Date VOC Trip Blank was made at ARI	NA		

Was Sample Split by ARI: NA YES Date/Time: _____ Equipment: _____ Split by: _____

Samples Logged by: JM Date: 8/10/11 Time: 1145

***** Notify Project Manager of discrepancies or concerns *****

Sample ID on Bottle	Sample ID on COC	Sample ID on Bottle	Sample ID on COC

Additional Notes, Discrepancies, & Resolutions:

By: Date

Small Air Bubbles ~2mm	Peabubbles 2-4 mm	LARGE Air Bubbles > 4 mm
	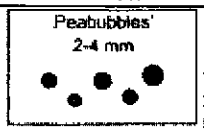	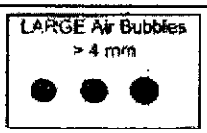

Small → "sm"
Peabubbles → "pb"
Large → "lg"
Headspace → "hs"

Analytical Resources, Incorporated
Analytical Chemists and Consultants

Cooler Temperature Compliance Form

TI03

Cooler#: 1	Temperature(°C): 9.8	
Sample ID	**Bottle Count**	**Bottle Type**
ABF-RRSS-A-081011	2	1-2oz WMG, 1-16oz WMG
ABF-DTS-A-081011	2	2-500 ml AG
ABF-DTS-B-081011	2	↓

Cooler#:	Temperature(°C):	
Sample ID	**Bottle Count**	**Bottle Type**

Cooler#:	Temperature(°C):	
Sample ID	**Bottle Count**	**Bottle Type**

Cooler#:	Temperature(°C):	
Sample ID	**Bottle Count**	**Bottle Type**

Completed by: JM Date: 8/16/11 Time: 1156

ANALYTICAL RESOURCES INCORPORATED

ORGANICS ANALYSIS DATA SHEET
PCB by GC/ECD Method SW8082

Sample ID: NBF-DTS-A-081011
SAMPLE

Lab Sample ID: TI03B
LIMS ID: 11-17426
Matrix: Water
Data Release Authorized:
Reported: 08/12/11

QC Report No: TI03-The Boeing Company
Project: NBF-LTST/DTS
025.082.311.001
Date Sampled: 08/09/11
Date Received: 08/10/11

Date Extracted: 08/11/11
Date Analyzed: 08/12/11 10:07
Instrument/Analyst: ECD5/JGR
GPC Cleanup: No
Sulfur Cleanup: Yes

Sample Amount: 500 mL
Final Extract Volume: 1.0 mL
Dilution Factor: 1.00
Silica Gel: No
Acid Cleanup: Yes

CAS Number	Analyte	RL	Result
12674-11-2	Aroclor 1016	0.10	< 0.10 U
53469-21-9	Aroclor 1242	0.10	< 0.10 U
12672-29-6	Aroclor 1248	0.10	< 0.10 U
11097-69-1	Aroclor 1254	0.10	< 0.10 U
11096-82-5	Aroclor 1260	0.10	< 0.10 U
11104-28-2	Aroclor 1221	0.10	< 0.10 U
11141-16-5	Aroclor 1232	0.10	< 0.10 U
37324-23-5	Aroclor 1262	0.10	< 0.10 U

Reported in µg/L (ppb)

PCB Surrogate Recovery

Decachlorobiphenyl	82.5%
Tetrachlorometaxylene	90.0%

ANALYTICAL RESOURCES INCORPORATED

ORGANICS ANALYSIS DATA SHEET
PCB by GC/ECD Method SW8082

Sample ID: NBF-DTS-B-081011
SAMPLE

Lab Sample ID: TI03C
LIMS ID: 11-17427
Matrix: Water
Data Release Authorized:
Reported: 08/12/11

QC Report No: TI03-The Boeing Company
Project: NBF-LTST/DTS
025.082.311.001
Date Sampled: 08/09/11
Date Received: 08/10/11

Date Extracted: 08/11/11
Date Analyzed: 08/12/11 10:26
Instrument/Analyst: ECD5/JGR
GPC Cleanup: No
Sulfur Cleanup: Yes

Sample Amount: 500 mL
Final Extract Volume: 1.0 mL
Dilution Factor: 1.00
Silica Gel: No
Acid Cleanup: Yes

CAS Number	Analyte	RL	Result
12674-11-2	Aroclor 1016	0.10	< 0.10 U
53469-21-9	Aroclor 1242	0.10	< 0.10 U
12672-29-6	Aroclor 1248	0.10	< 0.10 U
11097-69-1	Aroclor 1254	0.10	< 0.10 U
11096-82-5	Aroclor 1260	0.10	< 0.10 U
11104-28-2	Aroclor 1221	0.10	< 0.10 U
11141-16-5	Aroclor 1232	0.10	< 0.10 U
37324-23-5	Aroclor 1262	0.10	< 0.10 U

Reported in µg/L (ppb)

PCB Surrogate Recovery

Decachlorobiphenyl	80.2%
Tetrachlorometaxylene	84.5%

ANALYTICAL RESOURCES INCORPORATED

ORGANICS ANALYSIS DATA SHEET
PCB by GC/ECD Method SW8082

Sample ID: MB-081111
METHOD BLANK

Lab Sample ID: MB-081111
LIMS ID: 11-17426
Matrix: Water
Data Release Authorized:
Reported: 08/12/11

QC Report No: TI03-The Boeing Company
Project: NBF-LTST/DTS
025.082.311.001
Date Sampled: NA
Date Received: NA

Date Extracted: 08/11/11
Date Analyzed: 08/12/11 09:11
Instrument/Analyst: ECD5/JGR
GPC Cleanup: No
Sulfur Cleanup: Yes

Sample Amount: 500 mL
Final Extract Volume: 1.0 mL
Dilution Factor: 1.00
Silica Gel: No
Acid Cleanup: Yes

CAS Number	Analyte	RL	Result
12674-11-2	Aroclor 1016	0.10	< 0.10 U
53469-21-9	Aroclor 1242	0.10	< 0.10 U
12672-29-6	Aroclor 1248	0.10	< 0.10 U
11097-69-1	Aroclor 1254	0.10	< 0.10 U
11096-82-5	Aroclor 1260	0.10	< 0.10 U
11104-28-2	Aroclor 1221	0.10	< 0.10 U
11141-16-5	Aroclor 1232	0.10	< 0.10 U
37324-23-5	Aroclor 1262	0.10	< 0.10 U

Reported in µg/L (ppb)

PCB Surrogate Recovery

Decachlorobiphenyl	83.8%
Tetrachlorometaxylene	85.5%

ANALYTICAL RESOURCES INCORPORATED

SW8082/PCB WATER SURROGATE RECOVERY SUMMARY

Matrix: Water

QC Report No: TI03-The Boeing Company
Project: NBF-LTST/DTS
025.082.311.001

Client ID	DCBP % REC	DCBP LCL-UCL	TCMX % REC	TCMX LCL-UCL	TOT OUT
MB-081111	83.8%	39-116	85.5%	29-100	0
LCS-081111	83.0%	39-116	88.5%	29-100	0
LCSD-081111	80.8%	39-116	90.5%	29-100	0
NBF-DTS-A-081011	82.5%	10-128	90.0%	25-100	0
NBF-DTS-B-081011	80.2%	10-128	84.5%	25-100	0

Prep Method: SW3510C
Log Number Range: 11-17426 to 11-17427

FORM-II SW8082

ANALYTICAL RESOURCES INCORPORATED

ORGANICS ANALYSIS DATA SHEET
PCB by GC/ECD Method SW8082

Sample ID: LCS-081111
LCS/LCSD

Lab Sample ID: LCS-081111
LIMS ID: 11-17426
Matrix: Water
Data Release Authorized:
Reported: 08/12/11

QC Report No: TI03-The Boeing Company
Project: NBF-LTST/DTS
025.082.311.001
Date Sampled: NA
Date Received: NA

Date Extracted LCS/LCSD: 08/11/11

Date Analyzed LCS: 08/12/11 09:30
LCSD: 08/12/11 09:48
Instrument/Analyst LCS: ECD5/JGR
LCSD: ECD5/JGR
GPC Cleanup: No
Sulfur Cleanup: Yes

Sample Amount LCS: 500 mL
LCSD: 500 mL
Final Extract Volume LCS: 1.0 mL
LCSD: 1.0 mL
Dilution Factor LCS: 1.00
LCSD: 1.00
Silica Gel: No
Acid Cleanup: Yes

Analyte	LCS	Spike Added-LCS	LCS Recovery	LCSD	Spike Added-LCSD	LCSD Recovery	RPD
Aroclor 1016	0.880	1.00	88.0%	0.918	1.00	91.8%	4.2%
Aroclor 1260	0.843	1.00	84.3%	0.830	1.00	83.0%	1.6%

PCB Surrogate Recovery

	LCS	LCSD
Decachlorobiphenyl	83.0%	80.8%
Tetrachlorometaxylene	88.5%	90.5%

Results reported in µg/L
RPD calculated using sample concentrations per SW846.

ANALYTICAL RESOURCES INCORPORATED

ORGANICS ANALYSIS DATA SHEET
PCB by GC/ECD Method SW8082

Sample ID: NBF-RRSS-A-081011
SAMPLE

Lab Sample ID: TI03A
LIMS ID: 11-17425
Matrix: Soil
Data Release Authorized:
Reported: 08/15/11

QC Report No: TI03-The Boeing Company
Project: NBF-LTST/DTS
025.082.311.001
Date Sampled: 08/09/11
Date Received: 08/10/11

Date Extracted: 08/11/11
Date Analyzed: 08/12/11 17:03
Instrument/Analyst: ECD5/AAR
GPC Cleanup: No
Sulfur Cleanup: Yes
Acid Cleanup: Yes
Florisil Cleanup: No

Sample Amount: 12.7 g-dry-wt
Final Extract Volume: 4.00 mL
Dilution Factor: 1.00
Silica Gel: No

Percent Moisture: 4.8%

CAS Number	Analyte	RL	Result
12674-11-2	Aroclor 1016	32	< 32 U
53469-21-9	Aroclor 1242	32	< 32 U
12672-29-6	Aroclor 1248	32	< 32 U
11097-69-1	Aroclor 1254	32	< 32 U
11096-82-5	Aroclor 1260	32	< 32 U
11104-28-2	Aroclor 1221	32	< 32 U
11141-16-5	Aroclor 1232	32	< 32 U
37324-23-5	Aroclor 1262	32	< 32 U

Reported in µg/kg (ppb)

PCB Surrogate Recovery

Decachlorobiphenyl	64.8%
Tetrachlorometaxylene	80.0%

ANALYTICAL RESOURCES INCORPORATED

ORGANICS ANALYSIS DATA SHEET
PCB by GC/ECD Method SW8082

Sample ID: MB-081111
METHOD BLANK

Lab Sample ID: MB-081111
LIMS ID: 11-17425
Matrix: Soil
Data Release Authorized:
Reported: 08/15/11

QC Report No: TI03-The Boeing Company
Project: NBF-LTST/DTS
025.082.311.001
Date Sampled: NA
Date Received: NA

Date Extracted: 08/11/11
Date Analyzed: 08/12/11 16:07
Instrument/Analyst: ECD5/AAR
GPC Cleanup: No
Sulfur Cleanup: Yes
Acid Cleanup: Yes
Florisil Cleanup: No

Sample Amount: 12.0 g
Final Extract Volume: 4.00 mL
Dilution Factor: 1.00
Silica Gel: No

Percent Moisture: NA

CAS Number	Analyte	RL	Result
12674-11-2	Aroclor 1016	33	< 33 U
53469-21-9	Aroclor 1242	33	< 33 U
12672-29-6	Aroclor 1248	33	< 33 U
11097-69-1	Aroclor 1254	33	< 33 U
11096-82-5	Aroclor 1260	33	< 33 U
11104-28-2	Aroclor 1221	33	< 33 U
11141-16-5	Aroclor 1232	33	< 33 U
37324-23-5	Aroclor 1262	33	< 33 U

Reported in µg/kg (ppb)

PCB Surrogate Recovery

Decachlorobiphenyl	70.8%
Tetrachlorometaxylene	80.2%

ANALYTICAL RESOURCES INCORPORATED

SW8082/PCB SOIL/SEDIMENT SURROGATE RECOVERY SUMMARY

Matrix: Soil

QC Report No: TI03-The Boeing Company
Project: NBF-LTST/DTS
025.082.311.001

Client ID	DCBP % REC	DCBP LCL-UCL	TCMX % REC	TCMX LCL-UCL	TOT OUT
MB-081111	70.8%	51-112	80.2%	46-111	0
LCS-081111	69.0%	51-112	79.8%	46-111	0
LCSD-081111	70.8%	51-112	82.8%	46-111	0
NBF-RRSS-A-081011	64.8%	42-127	80.0%	50-114	0

Microwave (MARS) Control Limits
Prep Method: SW3546
Log Number Range: 11-17425 to 11-17425

FORM-II SW8082

ANALYTICAL RESOURCES INCORPORATED

ORGANICS ANALYSIS DATA SHEET
PCB by GC/ECD Method SW8082

Sample ID: LCS-081111
LCS/LCSD

Lab Sample ID: LCS-081111
LIMS ID: 11-17425
Matrix: Soil
Data Release Authorized:
Reported: 08/15/11

QC Report No: TI03-The Boeing Company
Project: NBF-LTST/DTS
025.082.311.001
Date Sampled: NA
Date Received: NA

Date Extracted LCS/LCSD: 08/11/11

Date Analyzed LCS: 08/12/11 16:26
LCSD: 08/12/11 16:44
Instrument/Analyst LCS: ECD5/AAR
LCSD: ECD5/AAR
GPC Cleanup: No
Sulfur Cleanup: Yes
Acid Cleanup: Yes
Florisil Cleanup: No

Sample Amount LCS: 12.0 g-dry-wt
LCSD: 12.0 g-dry-wt
Final Extract Volume LCS: 4.00 mL
LCSD: 4.00 mL
Dilution Factor LCS: 1.00
LCSD: 1.00
Silica Gel: No

Percent Moisture: NA

Analyte	LCS	Spike Added-LCS	LCS Recovery	LCSD	Spike Added-LCSD	LCSD Recovery	RPD
Aroclor 1016	136	167	81.4%	141	167	84.4%	3.6%
Aroclor 1260	114	167	68.3%	125	167	74.9%	9.2%

PCB Surrogate Recovery

	LCS	LCSD
Decachlorobiphenyl	69.0%	70.8%
Tetrachlorometaxylene	79.8%	82.8%

Results reported in µg/kg (ppb)
RPD calculated using sample concentrations per SW846.

ANALYTICAL RESOURCES INCORPORATED

ORGANICS ANALYSIS DATA SHEET
TPHG by Method NWTPHG
Matrix: Soil

Data Release Authorized:
Reported: 08/12/11

QC Report No: TI03-The Boeing Company
Project: NBF-LTST/DTS
Event: 025.082.311.001
Date Sampled: 08/09/11
Date Received: 08/10/11

ARI ID	Client ID	Analysis Date	Basis	Range	Result
MB-081111	Method Blank	08/11/11	Dry	Gasoline	< 5.0 U
11-17425		PID2		HC ID	---
				Trifluorotoluene	96.3%
				Bromobenzene	100%
TI03A	NBF-RRSS-A-081011	08/11/11	Dry	Gasoline	< 5.5 U
11-17425		PID2		HC ID	---
				Trifluorotoluene	95.9%
				Bromobenzene	97.5%

Gasoline values reported in mg/kg (ppm)

Quantitation on total peaks in the gasoline range from Toluene to Naphthalene.

GAS: Indicates the presence of gasoline or weathered gasoline.
GRO: Positive result that does not match an identifiable gasoline pattern.

Results corrected for soil moisture content per Section 11.10.5 of EPA Method 8000C.

ANALYTICAL RESOURCES INCORPORATED

TPHG SOIL SURROGATE RECOVERY SUMMARY

ARI Job: TI03
Matrix: Soil

QC Report No: TI03-The Boeing Company
Project: NBF-LTST/DTS
Event: 025.082.311.001

Client ID	BFB	TFT	BBZ	TOT OUT
MB-081111	NA	96.3%	100%	0
LCS-081111	NA	105%	104%	0
LCSD-081111	NA	106%	107%	0
NBF-RRSS-A-081011	NA	95.9%	97.5%	0

	LCS/MB LIMITS	QC LIMITS
(BFB) = Bromofluorobenzene	(70-130)	(70-130)
(TFT) = Trifluorotoluene	(80-120)	(66-123)
(BBZ) = Bromobenzene	(80-120)	(62-130)

Log Number Range: 11-17425 to 11-17425

FORM II TPHG

ANALYTICAL RESOURCES INCORPORATED

ORGANICS ANALYSIS DATA SHEET
TPHG by Method NWTPHG

Sample ID: LCS-081111
LAB CONTROL SAMPLE

Lab Sample ID: LCS-081111
LIMS ID: 11-17425
Matrix: Soil
Data Release Authorized:
Reported: 08/12/11

QC Report No: TI03-The Boeing Company
Project: NBF-LTST/DTS
Event: 025.082.311.001
Date Sampled: NA
Date Received: NA

Date Analyzed LCS: 08/11/11 06:24
LCSD: 08/11/11 06:52
Instrument/Analyst LCS: PID2/MH
LCSD: PID2/MH

Purge Volume: 5.0 mL

Sample Amount LCS: 100 mg-dry-wt
LCSD: 100 mg-dry-wt

Analyte	LCS	Spike Added-LCS	LCS Recovery	LCSD	Spike Added-LCSD	LCSD Recovery	RPD
Gasoline Range Hydrocarbons	47.4	50.0	94.8%	46.8	50.0	93.6%	1.3%

Reported in mg/kg (ppm)

RPD calculated using sample concentrations per SW846.

TPHG Surrogate Recovery

	LCS	LCSD
Trifluorotoluene	105%	106%
Bromobenzene	104%	107%

ANALYTICAL RESOURCES INCORPORATED

ORGANICS ANALYSIS DATA SHEET
TOTAL DIESEL RANGE HYDROCARBONS
NWTPHD by GC/FID
Page 1 of 1
Matrix: Soil

QC Report No: TI03-The Boeing Company
Project: NBF-LTST/DTS
025.082.311.001
Date Received: 08/10/11

Data Release Authorized:
Reported: 08/12/11

ARI ID	Sample ID	Extraction Date	Analysis Date	EFV DL	Range	RL	Result
MB-081011	Method Blank	08/10/11	08/11/11	1.00	Diesel	5.0	< 5.0 U
11-17425	HC ID: ---		FID3B	1.0	Motor Oil	10	< 10 U
					o-Terphenyl		96.0%
TI03A	NBF-RRSS-A-081011	08/10/11	08/11/11	1.00	Diesel	5.2	< 5.2 U
11-17425	HC ID: ---		FID3B	1.0	Motor Oil	10	< 10 U
					o-Terphenyl		95.5%

Reported in mg/kg (ppm)

EFV-Effective Final Volume in mL.
DL-Dilution of extract prior to analysis.
RL-Reporting limit.

Diesel quantitation on total peaks in the range from C12 to C24.
Motor Oil quantitation on total peaks in the range from C24 to C38.
HC ID: DRO/RRO indicates results of organics or additional hydrocarbons in ranges are not identifiable.

ANALYTICAL RESOURCES INCORPORATED

TPHD SURROGATE RECOVERY SUMMARY

Matrix: Soil

QC Report No: TI03-The Boeing Company
Project: NBF-LTST/DTS
025.082.311.001

Client ID	OTER	TOT OUT
081011MBS	96.0%	0
081011LCS	83.8%	0
081011LCSD	85.0%	0
NBF-RRSS-A-081011	95.5%	0

	LCS/MB LIMITS	QC LIMITS
(OTER) = o-Terphenyl	(50-150)	(50-150)

Prep Method: SW3546
Log Number Range: 11-17425 to 11-17425

FORM-II TPHD

ANALYTICAL RESOURCES INCORPORATED

ORGANICS ANALYSIS DATA SHEET
NWTPHD by GC/FID

Sample ID: LCS-081011
LCS/LCSD

Lab Sample ID: LCS-081011
LIMS ID: 11-17425
Matrix: Soil
Data Release Authorized:
Reported: 08/12/11

QC Report No: TI03-The Boeing Company
Project: NBF-LTST/DTS
025.082.311.001
Date Sampled: NA
Date Received: NA

Date Extracted LCS/LCSD: 08/10/11

Date Analyzed LCS: 08/11/11 14:12
LCSD: 08/11/11 14:35
Instrument/Analyst LCS: FID3B/MS
LCSD: FID3B/MS

Sample Amount LCS: 10.0 g-dry-wt
LCSD: 10.0 g-dry-wt
Final Extract Volume LCS: 1.0 mL
LCSD: 1.0 mL
Dilution Factor LCS: 1.00
LCSD: 1.00

Range	LCS	Spike Added-LCS	LCS Recovery	LCSD	Spike Added-LCSD	LCSD Recovery	RPD
Diesel	135	150	90.0%	141	150	94.0%	4.3%

TPHD Surrogate Recovery

	LCS	LCSD
o-Terphenyl	83.8%	85.0%

Results reported in mg/kg
RPD calculated using sample concentrations per SW846.

ANALYTICAL RESOURCES INCORPORATED

TOTAL DIESEL RANGE HYDROCARBONS-EXTRACTION REPORT

ARI Job: TI03
Project: NBF-LTST/DTS
025.082.311.001

Matrix: Soil
Date Received: 08/10/11

ARI ID	Client ID	Client Amt	Final Vol	Basis	Prep Date
11-17425-081011MB1	Method Blank	10.0 g	1.00 mL	-	08/10/11
11-17425-081011LCS1	Lab Control	10.0 g	1.00 mL	-	08/10/11
11-17425-081011LCSD1	Lab Control Dup	10.0 g	1.00 mL	-	08/10/11
11-17425-TI03A	NBF-RRSS-A-081011	9.59 g	1.00 mL	D	08/10/11

Basis: D=Dry Weight W=As Received

ANALYTICAL RESOURCES INCORPORATED

INORGANICS ANALYSIS DATA SHEET
TOTAL METALS

Sample ID: NBF-RRSS-A-081011
SAMPLE

Lab Sample ID: TI03A
LIMS ID: 11-17425
Matrix: Soil
Data Release Authorized:
Reported: 08/12/11

QC Report No: TI03-The Boeing Company
Project: NBF-LTST/DTS
025.082.311.001
Date Sampled: 08/09/11
Date Received: 08/10/11

Percent Total Solids: 94.4%

Prep Meth	Prep Date	Analysis Method	Analysis Date	CAS Number	Analyte	RL	mg/kg-dry	Q
3050B	08/11/11	6010B	08/12/11	7440-38-2	Arsenic	5	5	U
3050B	08/11/11	6010B	08/12/11	7440-43-9	Cadmium	0.2	0.2	U
3050B	08/11/11	6010B	08/12/11	**7440-47-3**	**Chromium**	0.5	**12.6**	
3050B	08/11/11	6010B	08/12/11	**7439-92-1**	**Lead**	2	**9**	
CLP	08/11/11	7471A	08/11/11	7439-97-6	Mercury	0.02	0.02	U

U-Analyte undetected at given RL
RL-Reporting Limit

ANALYTICAL RESOURCES INCORPORATED

INORGANICS ANALYSIS DATA SHEET
TOTAL METALS

Sample ID: LAB CONTROL

Lab Sample ID: TI03LCS
LIMS ID: 11-17425
Matrix: Soil
Data Release Authorized:
Reported: 08/12/11

QC Report No: TI03-The Boeing Company
Project: NBF-LTST/DTS
025.082.311.001
Date Sampled: NA
Date Received: NA

BLANK SPIKE QUALITY CONTROL REPORT

Analyte	Analysis Method	Spike Found	Spike Added	% Recovery	Q
Arsenic	6010B	207	200	104%	
Cadmium	6010B	52.6	50.0	105%	
Chromium	6010B	53.4	50.0	107%	
Lead	6010B	203	200	102%	
Mercury	7471A	0.52	0.50	104%	

Reported in mg/kg-dry

N-Control limit not met
NA-Not Applicable, Analyte Not Spiked
Control Limits: 80-120%

ANALYTICAL RESOURCES INCORPORATED

INORGANICS ANALYSIS DATA SHEET
TOTAL METALS

Sample ID: METHOD BLANK

Lab Sample ID: TI03MB
LIMS ID: 11-17425
Matrix: Soil
Data Release Authorized:
Reported: 08/12/11

Percent Total Solids: NA

QC Report No: TI03-The Boeing Company
Project: NBF-LTST/DTS
025.082.311.001
Date Sampled: NA
Date Received: NA

Prep Meth	Prep Date	Analysis Method	Analysis Date	CAS Number	Analyte	RL	mg/kg-dry	Q
3050B	08/11/11	6010B	08/12/11	7440-38-2	Arsenic	5	5	U
3050B	08/11/11	6010B	08/12/11	7440-43-9	Cadmium	0.2	0.2	U
3050B	08/11/11	6010B	08/12/11	7440-47-3	Chromium	0.5	0.5	U
3050B	08/11/11	6010B	08/12/11	7439-92-1	Lead	2	2	U
CLP	08/11/11	7471A	08/11/11	7439-97-6	Mercury	0.02	0.02	U

U-Analyte undetected at given RL
RL-Reporting Limit

Analytical Resources, Incorporated
Analytical Chemists and Consultants

August 22, 2011

Jeremy Davis
Landau Associates, Inc.
130 Second Ave
Edmonds, WA 98020

RE: Project: NBF – LTST 025.082.311.001
ARI Job: TI78

Dear Jeremy:

Please find enclosed the Chain of Custody (COC) record, sample receipt documentation, and analytical results for the above referenced project. Analytical Resources, Inc. (ARI) accepted one soil sample in good condition on August 16, 2011. One cooler was received with a temperature of 1.9°C.

The samples were analyzed for PCBs, NWTPH-Dx, NWTPH-Gx and Total Metals, as requested on the COC.

There were no irregularities with the samples.

Quality control analysis results are included for your review. Copies of the reports and all associated raw data will be kept on file electronically at ARI. If you have any questions or require additional information, please contact me at your convenience.

Sincerely,
ANALYTICAL RESOURCES, INC

Kelly Bottem
Client Services Manager
(206) 695-6211
kellyb@arilabs.com
www.arilabs.com

cc: Carl Bach, The Boeing Company, P.O. Box 3707, M/S 1W-12, Seattle, WA 98124-2207

4611 South 134th Place, Suite 100 • Tukwila WA 98168 • **206-695-6200** • **206-695-6201** fax

☒ Seattle/Edmonds (425) 778-0907
☐ Tacoma (253) 926-2493
☐ Spokane (509) 327-9737
☐ Portland (503) 542-1080
☐

LANDAU ASSOCIATES

Chain-of-Custody Record

Date 8/15/11
Page 1 of 1

Project Name NBF- LTST
Project No. 025.082.311.001
Project Location/Event NBF- LTST
Sampler's Name JMD (Jeremy Davis)
Project Contact JMD, Joe K., Carl B., Anne H
Send Results To JMD, Joe K. Carl B

Turnaround Time
☐ Standard
☒ Accelerated
☐ 72 Hr

Testing Parameters

Sample I.D.	Date	Time	Matrix	No. of Containers	PCBs	NW TPH-Gx	NW TPH-Dx	Metals - MCA-5								
NBF-RRSS-A-081511	8/15/11	1530	S	2	✓	✓	✓	✓								

Observations/Comments

~~X Allow water samples to settle, collect aliquot from clear portion~~ NA JMD
~~X NWTPH-Dx - run acid wash/silica gel cleanup.~~ JMD Not Nec.

___ run samples standardized to _____ product

___ Analyze for EPH if no specific product identified

VOC/BTEX/VPH (soil):
___ non-preserved
___ preserved w/methanol
___ preserved w/sodium bisulfate
___ Freeze upon receipt

___ Dissolved metal water samples field filtered

Other ★ Arsenic
Cadmium
Chromium
Lead
Mercury

Special Shipment/Handling or Storage Requirements Cooler with Wet Ice

Method of Shipment ARI Pick Up

Relinquished by	Received by	Relinquished by	Received by
Signature	Signature	Signature	Signature
Jeremy Davis	Jose Ugas		
Printed Name	Printed Name	Printed Name	Printed Name
LAI	ARI		
Company	Company	Company	Company
Date 8/16/11 Time 1230	Date 8/16/2011 Time 16:05	Date ___ Time ___	Date ___ Time ___

WHITE COPY - Project File YELLOW COPY - Laboratory PINK COPY - Client Representative

Rev 8/09

Sample ID Cross Reference Report

ANALYTICAL RESOURCES INCORPORATED

ARI Job No: TI78
Client: The Boeing Company
Project Event: 025-082.311.001
Project Name: NBF-LTST

	Sample ID	ARI Lab ID	ARI LIMS ID	Matrix	Sample Date/Time	VTSR
1.	NBF-RRSS-A-081511	TI78A	11-17892	Soil	08/15/11 15:30	08/16/11 16:05

Printed 08/16/11

Analytical Resources, Incorporated
Analytical Chemists and Consultants

Cooler Receipt Form

ARI Client: Boeing

Project Name: NBF-LTST

COC No(s): _____ NA

Delivered by: Fed-Ex UPS Courier Hand Delivered Other: _____

Assigned ARI Job No: T178

Tracking No: _____ NA

Preliminary Examination Phase:

Were intact, properly signed and dated custody seals attached to the outside of to cooler? YES NO

Were custody papers included with the cooler? ..... YES NO

Were custody papers properly filled out (ink, signed, etc.) ..... YES NO

Temperature of Cooler(s) (°C) (recommended 2.0-6.0 °C for chemistry)..... 1.9

If cooler temperature is out of compliance fill out form 00070F

Temp Gun ID#: 90941619

Cooler Accepted by: JM Date: 8/16/2011 Time: 16:05

Complete custody forms and attach all shipping documents

Log-In Phase:

Was a temperature blank included in the cooler? ..... YES NO

What kind of packing material was used? ... Bubble Wrap Wet Ice Gel Packs Baggies Foam Block Paper Other: _____

Was sufficient ice used (if appropriate)? ..... NA YES NO

Were all bottles sealed in individual plastic bags? ..... YES NO

Did all bottles arrive in good condition (unbroken)? ..... YES NO

Were all bottle labels complete and legible? ..... YES NO

Did the number of containers listed on COC match with the number of containers received? ..... YES NO

Did all bottle labels and tags agree with custody papers? ..... YES NO

Were all bottles used correct for the requested analyses? ..... YES NO

Do any of the analyses (bottles) require preservation? (attach preservation sheet, excluding VOCs)... NA YES NO

Were all VOC vials free of air bubbles? ..... NA YES NO

Was sufficient amount of sample sent in each bottle? ..... YES NO

Date VOC Trip Blank was made at ARI..... NA _____

Was Sample Split by ARI : NA YES Date/Time:_____ Equipment:_____ Split by:_____

Samples Logged by: JM Date: 8/16/11 Time: 1622

***** Notify Project Manager of discrepancies or concerns *****

Sample ID on Bottle	Sample ID on COC	Sample ID on Bottle	Sample ID on COC

Additional Notes, Discrepancies, & Resolutions:

By: Date:

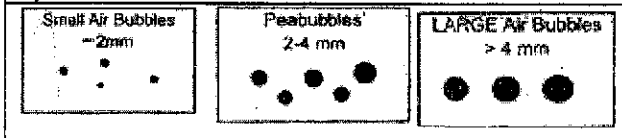

Small → "sm"
Peabubbles → "pb"
Large → "lg"
Headspace → "hs"

ANALYTICAL RESOURCES INCORPORATED

ORGANICS ANALYSIS DATA SHEET
PCB by GC/ECD Method SW8082

Sample ID: NBF-RRSS-A-081511
SAMPLE

Lab Sample ID: TI78A
LIMS ID: 11-17892
Matrix: Soil
Data Release Authorized:
Reported: 08/22/11

QC Report No: TI78-The Boeing Company
Project: NBF-LTST
025-082.311.001
Date Sampled: 08/15/11
Date Received: 08/16/11

Date Extracted: 08/18/11
Date Analyzed: 08/19/11 09:02
Instrument/Analyst: ECD5/JGR
GPC Cleanup: No
Sulfur Cleanup: Yes
Acid Cleanup: Yes
Florisil Cleanup: No

Sample Amount: 12.3 g-dry-wt
Final Extract Volume: 4.00 mL
Dilution Factor: 1.00
Silica Gel: Yes

Percent Moisture: 6.0%

CAS Number	Analyte	RL	Result
12674-11-2	Aroclor 1016	32	< 32 U
53469-21-9	Aroclor 1242	32	< 32 U
12672-29-6	Aroclor 1248	32	< 32 U
11097-69-1	Aroclor 1254	32	< 32 U
11096-82-5	Aroclor 1260	32	< 32 U
11104-28-2	Aroclor 1221	32	< 32 U
11141-16-5	Aroclor 1232	32	< 32 U
37324-23-5	Aroclor 1262	32	< 32 U

Reported in µg/kg (ppb)

PCB Surrogate Recovery

Decachlorobiphenyl	80.8%
Tetrachlorometaxylene	81.8%

ANALYTICAL RESOURCES INCORPORATED

ORGANICS ANALYSIS DATA SHEET
PCB by GC/ECD Method SW8082

Sample ID: MB-081811
METHOD BLANK

Lab Sample ID: MB-081811
LIMS ID: 11-17892
Matrix: Soil
Data Release Authorized:
Reported: 08/22/11

QC Report No: TI78-The Boeing Company
Project: NBF-LTST
025-082.311.001
Date Sampled: NA
Date Received: NA

Date Extracted: 08/18/11
Date Analyzed: 08/19/11 09:20
Instrument/Analyst: ECD5/JGR
GPC Cleanup: No
Sulfur Cleanup: Yes
Acid Cleanup: Yes
Florisil Cleanup: No

Sample Amount: 12.0 g
Final Extract Volume: 4.00 mL
Dilution Factor: 1.00
Silica Gel: Yes

Percent Moisture: NA

CAS Number	Analyte	RL	Result
12674-11-2	Aroclor 1016	33	< 33 U
53469-21-9	Aroclor 1242	33	< 33 U
12672-29-6	Aroclor 1248	33	< 33 U
11097-69-1	Aroclor 1254	33	< 33 U
11096-82-5	Aroclor 1260	33	< 33 U
11104-28-2	Aroclor 1221	33	< 33 U
11141-16-5	Aroclor 1232	33	< 33 U
37324-23-5	Aroclor 1262	33	< 33 U

Reported in µg/kg (ppb)

PCB Surrogate Recovery

Decachlorobiphenyl	85.5%
Tetrachlorometaxylene	77.0%

ANALYTICAL RESOURCES INCORPORATED

SW8082/PCB SOIL/SEDIMENT SURROGATE RECOVERY SUMMARY

Matrix: Soil

QC Report No: TI78-The Boeing Company
Project: NBF-LTST
025-082.311.001

Client ID	DCBP % REC	DCBP LCL-UCL	TCMX % REC	TCMX LCL-UCL	TOT OUT
MB-081811	85.5%	51-112	77.0%	46-111	0
LCS-081811	83.5%	51-112	76.2%	46-111	0
LCSD-081811	86.2%	51-112	80.0%	46-111	0
NBF-RRSS-A-081511	80.8%	42-127	81.8%	50-114	0

Microwave (MARS) Control Limits
Prep Method: SW3546
Log Number Range: 11-17892 to 11-17892

FORM-II SW8082

ANALYTICAL RESOURCES INCORPORATED

ORGANICS ANALYSIS DATA SHEET
PCB by GC/ECD Method SW8082

Sample ID: LCS-081811
LCS/LCSD

Lab Sample ID: LCS-081811
LIMS ID: 11-17892
Matrix: Soil
Data Release Authorized:
Reported: 08/22/11

QC Report No: TI78-The Boeing Company
Project: NBF-LTST
025-082.311.001
Date Sampled: NA
Date Received: NA

Date Extracted LCS/LCSD: 08/18/11

Date Analyzed LCS: 08/19/11 09:39
LCSD: 08/19/11 09:58
Instrument/Analyst LCS: ECD5/JGR
LCSD: ECD5/JGR
GPC Cleanup: No
Sulfur Cleanup: Yes
Acid Cleanup: Yes
Florisil Cleanup: No

Sample Amount LCS: 12.0 g-dry-wt
LCSD: 12.0 g-dry-wt
Final Extract Volume LCS: 4.00 mL
LCSD: 4.00 mL
Dilution Factor LCS: 1.00
LCSD: 1.00
Silica Gel: Yes

Percent Moisture: NA

Analyte	LCS	Spike Added-LCS	LCS Recovery	LCSD	Spike Added-LCSD	LCSD Recovery	RPD
Aroclor 1016	131	167	78.4%	143	167	85.6%	8.8%
Aroclor 1260	142	167	85.0%	148	167	88.6%	4.1%

PCB Surrogate Recovery

	LCS	LCSD
Decachlorobiphenyl	83.5%	86.2%
Tetrachlorometaxylene	76.2%	80.0%

Results reported in µg/kg (ppb)
RPD calculated using sample concentrations per SW846.

ANALYTICAL RESOURCES INCORPORATED

ORGANICS ANALYSIS DATA SHEET
TOTAL DIESEL RANGE HYDROCARBONS
NWTPHD by GC/FID
Page 1 of 1
Matrix: Soil

QC Report No: TI78-The Boeing Company
Project: NBF-LTST
025-082.311.001
Date Received: 08/16/11

Data Release Authorized:
Reported: 08/22/11

ARI ID	Sample ID	Extraction Date	Analysis Date	EFV DL	Range	RL	Result
MB-081811	Method Blank	08/18/11	08/19/11	1.00	Diesel	5.0	< 5.0 U
11-17892	HC ID: ---		FID3B	1.0	Motor Oil	10	< 10 U
					o-Terphenyl		92.9%
TI78A	NBF-RRSS-A-081511	08/18/11	08/19/11	1.00	**Diesel**	**5.1**	**14**
11-17892	HC ID: **DRO/MOTOR OIL**		FID3B	1.0	**Motor Oil**	**10**	**59**
					o-Terphenyl		77.3%

Reported in mg/kg (ppm)

EFV-Effective Final Volume in mL.
DL-Dilution of extract prior to analysis.
RL-Reporting limit.

Diesel quantitation on total peaks in the range from C12 to C24.
Motor Oil quantitation on total peaks in the range from C24 to C38.
HC ID: DRO/RRO indicates results of organics or additional hydrocarbons in ranges are not identifiable.

ANALYTICAL RESOURCES INCORPORATED

TPHD SURROGATE RECOVERY SUMMARY

Matrix: Soil

QC Report No: TI78-The Boeing Company
Project: NBF-LTST
025-082.311.001

Client ID	OTER	TOT OUT
081811MBS	92.9%	0
081811LCS	83.8%	0
081811LCSD	88.4%	0
NBF-RRSS-A-081511	77.3%	0

	LCS/MB LIMITS	QC LIMITS
(OTER) = o-Terphenyl	(50-150)	(50-150)

Prep Method: SW3546
Log Number Range: 11-17892 to 11-17892

FORM-II TPHD

ANALYTICAL RESOURCES INCORPORATED

ORGANICS ANALYSIS DATA SHEET
NWTPHD by GC/FID

Sample ID: LCS-081811
LCS/LCSD

Lab Sample ID: LCS-081811
LIMS ID: 11-17892
Matrix: Soil
Data Release Authorized:
Reported: 08/22/11

QC Report No: TI78-The Boeing Company
Project: NBF-LTST
025-082.311.001
Date Sampled: NA
Date Received: NA

Date Extracted LCS/LCSD: 08/18/11

Date Analyzed LCS: 08/19/11 04:23
LCSD: 08/19/11 04:46
Instrument/Analyst LCS: FID3B/MS
LCSD: FID3B/MS

Sample Amount LCS: 10.0 g-dry-wt
LCSD: 10.0 g-dry-wt
Final Extract Volume LCS: 1.0 mL
LCSD: 1.0 mL
Dilution Factor LCS: 1.00
LCSD: 1.00

Range	LCS	Spike Added-LCS	LCS Recovery	LCSD	Spike Added-LCSD	LCSD Recovery	RPD
Diesel	130	150	86.7%	137	150	91.3%	5.2%

TPHD Surrogate Recovery

	LCS	LCSD
o-Terphenyl	83.8%	88.4%

Results reported in mg/kg
RPD calculated using sample concentrations per SW846.

ANALYTICAL RESOURCES INCORPORATED

TOTAL DIESEL RANGE HYDROCARBONS-EXTRACTION REPORT

Matrix: Soil
Date Received: 08/16/11

ARI Job: TI78
Project: NBF-LTST
025-082.311.001

ARI ID	Client ID	Client Amt	Final Vol	Basis	Prep Date
11-17892-081811MB1	Method Blank	10.0 g	1.00 mL	-	08/18/11
11-17892-081811LCS1	Lab Control	10.0 g	1.00 mL	-	08/18/11
11-17892-081811LCSD1	Lab Control Dup	10.0 g	1.00 mL	-	08/18/11
11-17892-TI78A	NBF-RRSS-A-081511	9.78 g	1.00 mL	D	08/18/11

Basis: D=Dry Weight W=As Received

ANALYTICAL RESOURCES INCORPORATED

ORGANICS ANALYSIS DATA SHEET
TPHG by Method NWTPHG
Matrix: Soil

Data Release Authorized:
Reported: 08/18/11

QC Report No: TI78-The Boeing Company
Project: NBF-LTST
Event: 025-082.311.001
Date Sampled: 08/15/11
Date Received: 08/16/11

ARI ID	Client ID	Analysis Date	Basis	Range	Result
MB-081711	Method Blank	08/17/11	Dry	Gasoline	< 5.0 U
11-17892		PID1		HC ID	---
				Trifluorotoluene	89.0%
				Bromobenzene	102%
TI78A	NBF-RRSS-A-081511	08/17/11	Dry	Gasoline	< 5.6 U
11-17892		PID1		HC ID	---
				Trifluorotoluene	89.4%
				Bromobenzene	105%

Gasoline values reported in mg/kg (ppm)

Quantitation on total peaks in the gasoline range from Toluene to Naphthalene.

GAS: Indicates the presence of gasoline or weathered gasoline.
GRO: Positive result that does not match an identifiable gasoline pattern.

Results corrected for soil moisture content per Section 11.10.5 of EPA Method 8000C.

ANALYTICAL RESOURCES INCORPORATED

TPHG SOIL SURROGATE RECOVERY SUMMARY

ARI Job: TI78
Matrix: Soil

QC Report No: TI78-The Boeing Company
Project: NBF-LTST
Event: 025-082.311.001

Client ID	BFB	TFT	BBZ	TOT OUT
MB-081711	NA	89.0%	102%	0
LCS-081711	NA	87.1%	98.1%	0
LCSD-081711	NA	94.5%	104%	0
NBF-RRSS-A-081511	NA	89.4%	105%	0

	LCS/MB LIMITS	QC LIMITS
(BFB) = Bromofluorobenzene	(70-130)	(70-130)
(TFT) = Trifluorotoluene	(80-120)	(66-123)
(BBZ) = Bromobenzene	(80-120)	(62-130)

Log Number Range: 11-17892 to 11-17892

FORM II TPHG

ANALYTICAL RESOURCES INCORPORATED

ORGANICS ANALYSIS DATA SHEET
TPHG by Method NWTPHG

Sample ID: LCS-081711
LAB CONTROL SAMPLE

Lab Sample ID: LCS-081711
LIMS ID: 11-17892
Matrix: Soil
Data Release Authorized:
Reported: 08/18/11

QC Report No: TI78-The Boeing Company
Project: NBF-LTST
Event: 025-082.311.001
Date Sampled: NA
Date Received: NA

Date Analyzed LCS: 08/17/11 11:19
LCSD: 08/17/11 11:48
Instrument/Analyst LCS: PID1/MS
LCSD: PID1/MS

Purge Volume: 5.0 mL

Sample Amount LCS: 100 mg-dry-wt
LCSD: 100 mg-dry-wt

Analyte	LCS	Spike Added-LCS	LCS Recovery	LCSD	Spike Added-LCSD	LCSD Recovery	RPD
Gasoline Range Hydrocarbons	51.0	50.0	102%	55.8	50.0	112%	9.0%

Reported in mg/kg (ppm)

RPD calculated using sample concentrations per SW846.

TPHG Surrogate Recovery

	LCS	LCSD
Trifluorotoluene	87.1%	94.5%
Bromobenzene	98.1%	104%

ANALYTICAL RESOURCES INCORPORATED

INORGANICS ANALYSIS DATA SHEET
TOTAL METALS

Sample ID: NBF-RRSS-A-081511
SAMPLE

Lab Sample ID: TI78A
LIMS ID: 11-17892
Matrix: Soil
Data Release Authorized:
Reported: 08/18/11

QC Report No: TI78-The Boeing Company
Project: NBF-LTST
025-082.311.001
Date Sampled: 08/15/11
Date Received: 08/16/11

Percent Total Solids: 94.4%

Prep Meth	Prep Date	Analysis Method	Analysis Date	CAS Number	Analyte	RL	mg/kg-dry	Q
3050B	08/17/11	6010B	08/18/11	7440-38-2	Arsenic	5	5	U
3050B	08/17/11	6010B	08/18/11	**7440-43-9**	**Cadmium**	0.2	**0.3**	
3050B	08/17/11	6010B	08/18/11	**7440-47-3**	**Chromium**	0.5	**13.2**	
3050B	08/17/11	6010B	08/18/11	**7439-92-1**	**Lead**	2	**13**	
CLP	08/17/11	7471A	08/18/11	**7439-97-6**	**Mercury**	0.02	**0.03**	

U-Analyte undetected at given RL
RL-Reporting Limit

ANALYTICAL RESOURCES INCORPORATED

INORGANICS ANALYSIS DATA SHEET
TOTAL METALS

Sample ID: METHOD BLANK

Lab Sample ID: TI78MB
LIMS ID: 11-17892
Matrix: Soil
Data Release Authorized:
Reported: 08/18/11

QC Report No: TI78-The Boeing Company
Project: NBF-LTST
025-082.311.001
Date Sampled: NA
Date Received: NA

Percent Total Solids: NA

Prep Meth	Prep Date	Analysis Method	Analysis Date	CAS Number	Analyte	RL	mg/kg-dry	Q
3050B	08/17/11	6010B	08/18/11	7440-38-2	Arsenic	5	5	U
3050B	08/17/11	6010B	08/18/11	7440-43-9	Cadmium	0.2	0.2	U
3050B	08/17/11	6010B	08/18/11	7440-47-3	Chromium	0.5	0.5	U
3050B	08/17/11	6010B	08/18/11	7439-92-1	Lead	2	2	U
CLP	08/17/11	7471A	08/18/11	7439-97-6	Mercury	0.02	0.02	U

U-Analyte undetected at given RL
RL-Reporting Limit

ANALYTICAL RESOURCES INCORPORATED

INORGANICS ANALYSIS DATA SHEET
TOTAL METALS

Sample ID: LAB CONTROL

Lab Sample ID: TI78LCS
LIMS ID: 11-17892
Matrix: Soil
Data Release Authorized:
Reported: 08/18/11

QC Report No: TI78-The Boeing Company
Project: NBF-LTST
025-082.311.001
Date Sampled: NA
Date Received: NA

BLANK SPIKE QUALITY CONTROL REPORT

Analyte	Analysis Method	Spike Found	Spike Added	% Recovery	Q
Arsenic	6010B	191	200	95.5%	
Cadmium	6010B	48.4	50.0	96.8%	
Chromium	6010B	48.8	50.0	97.6%	
Lead	6010B	191	200	95.5%	
Mercury	7471A	0.52	0.50	104%	

Reported in mg/kg-dry

N-Control limit not met
NA-Not Applicable, Analyte Not Spiked
Control Limits: 80-120%

Analytical Resources, Incorporated
Analytical Chemists and Consultants

August 29, 2011

Jeremy Davis
Landau Associates, Inc.
130 Second Ave
Edmonds, WA 98020

RE: Project: NBF – LTST 025.082.311.001
ARI Job: TJ66

Dear Jeremy:

Please find enclosed the Chain of Custody (COC) record, sample receipt documentation, and analytical results for the above referenced project. Analytical Resources, Inc. (ARI) accepted one soil sample in good condition on August 24, 2011. One cooler was received with a temperature of 5.4°C.

The samples were analyzed for PCBs, NWTPH-Dx, NWTPH-Gx and Total Metals, as requested on the COC.

There were no irregularities with the samples.

Quality control analysis results are included for your review. Copies of the reports and all associated raw data will be kept on file electronically at ARI. If you have any questions or require additional information, please contact me at your convenience.

Sincerely,
ANALYTICAL RESOURCES, INC

Kelly Bottem
Client Services Manager
(206) 695-6211
kellyb@arilabs.com
www.arilabs.com

cc: Carl Bach, The Boeing Company, P.O. Box 3707, M/S 1W-12, Seattle, WA 98124-2207

4611 South 134th Place, Suite 100 • Tukwila WA 98168 • **206-695-6200** • **206-695-6201** fax

☑ Seattle/Edmonds (425) 778-0907
☐ Tacoma (253) 926-2493
☐ Spokane (509) 327-9737
☐ Portland (503) 542-1080
☐

TJlde

LANDAU ASSOCIATES

Chain-of-Custody Record

Date 8/24/11
Page 1 of 1

Project Name NBF-LTST
Project No. 025.082.311.001
Project Location/Event NBF-RRSS
Sampler's Name JEREMY DAVIS
Project Contact Jeremy D, Carl B, Kris H.
Send Results To Jeremy D, Carl B, Joe K.

Turnaround Time
☐ Standard
☒ Accelerated
72 Hr

Testing Parameters

Sample I.D.	Date	Time	Matrix	No. of Containers	PCBs	NWTPH-Dx	NWTPH-Gx	Metals (Arsenic, Cr)
NBF-RRSS-A-082411	8/24/11	1155	S	2	✓	✓	✓	✓

Observations/Comments

X Allow water samples to settle, collect ~~aliquot from clear portion~~ NA - SMD

~~X NWTPH-Dx run acid wash/silica gel cleanup~~ Not Nec. SMP

___ run samples standardized to _____ product

___ Analyze for EPH if no specific product identified

VOC/BTEX/VPH (soil):
___ non-preserved
___ preserved w/methanol
___ preserved w/sodium bisulfate
___ Freeze upon receipt

___ Dissolved metal water samples field filtered

Other Arsenic, Chromium, Cadmium, LEAD, Mercury

Special Shipment/Handling or Storage Requirements Cooler with wet ice

Method of Shipment Drop-off @ ARI

Relinquished by	Received by	Relinquished by	Received by
Signature JEREMY DAVIS	Signature A. Volgardsen	Signature	Signature
Printed Name	Printed Name DRI	Printed Name	Printed Name
Company CAI	Company	Company	Company
Date 8/24/11 Time 1355	Date 8/24/11 Time 1335	Date Time	Date Time

WHITE COPY - Project File YELLOW COPY - Laboratory PINK COPY - Client Representative

Rev 8/09

Analytical Resources, Incorporated
Analytical Chemists and Consultants

Cooler Receipt Form

ARI Client: Boeing

COC No(s): _____ (NA)

Assigned ARI Job No: TJ606

Project Name: NBF-LTST

Delivered by: Fed-Ex UPS Courier Hand Delivered Other: _____

Tracking No: _____ (NA)

Preliminary Examination Phase:

Were intact, properly signed and dated custody seals attached to the outside of to cooler? (YES) NO

Were custody papers included with the cooler? ..... (YES) NO

Were custody papers properly filled out (ink, signed, etc.) ..... (YES) NO

Temperature of Cooler(s) (°C) (recommended 2.0-6.0 °C for chemistry)..... 5.4 ___ ___ ___

If cooler temperature is out of compliance fill out form 00070F

Temp Gun ID#: 90941609

Cooler Accepted by: AV Date: 8/24/11 Time: 1335

Complete custody forms and attach all shipping documents

Log-In Phase:

Was a temperature blank included in the cooler? ..... YES (NO)

What kind of packing material was used? ... (Bubble Wrap) (Wet Ice) Gel Packs (Baggies) Foam Block Paper Other: _____

Was sufficient ice used (if appropriate)? ..... NA (YES) NO

Were all bottles sealed in individual plastic bags? ..... (YES) NO

Did all bottles arrive in good condition (unbroken)? ..... (YES) NO

Were all bottle labels complete and legible? ..... (YES) NO

Did the number of containers listed on COC match with the number of containers received? ..... (YES) NO

Did all bottle labels and tags agree with custody papers? ..... (YES) NO

Were all bottles used correct for the requested analyses? ..... (YES) NO

Do any of the analyses (bottles) require preservation? (attach preservation sheet, excluding VOCs)... (NA) YES NO

Were all VOC vials free of air bubbles? ..... (NA) YES NO

Was sufficient amount of sample sent in each bottle? ..... (YES) NO

Date VOC Trip Blank was made at ARI..... (NA) _____

Was Sample Split by ARI : (NA) YES Date/Time: _____ Equipment: _____ Split by: _____

Samples Logged by: AV Date: 8/24/11 Time: 1335

***** Notify Project Manager of discrepancies or concerns *****

Sample ID on Bottle	Sample ID on COC	Sample ID on Bottle	Sample ID on COC

Additional Notes, Discrepancies, & Resolutions:

By: Date:

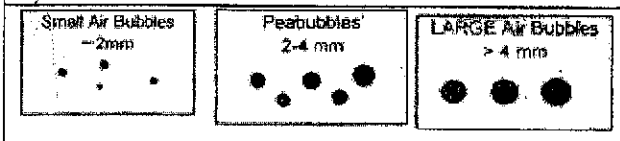

Small → "sm"
Peabubbles → "pb"
Large → "lg"
Headspace → "hs"

Sample ID Cross Reference Report

ANALYTICAL RESOURCES INCORPORATED

ARI Job No: TJ66
Client: The Boeing Company
Project Event: 025.082.311.001
Project Name: NBF-LTST

	Sample ID	ARI Lab ID	ARI LIMS ID	Matrix	Sample Date/Time	VTSR
1.	NBF-RRSS-A-082411	TJ66A	11-18297	Soil	08/24/11 11:55	08/24/11 13:35

Printed 08/24/11

ANALYTICAL RESOURCES INCORPORATED

ORGANICS ANALYSIS DATA SHEET
PCB by GC/ECD Method SW8082

Sample ID: NBF-RRSS-A-082411
SAMPLE

Lab Sample ID: TJ66A
LIMS ID: 11-18297
Matrix: Soil
Data Release Authorized: VD
Reported: 08/26/11

QC Report No: TJ66-The Boeing Company
Project: NBF-LTST
025.082.311.001
Date Sampled: 08/24/11
Date Received: 08/24/11

Date Extracted: 08/25/11
Date Analyzed: 08/25/11 16:50
Instrument/Analyst: ECD7/JGR
GPC Cleanup: No
Sulfur Cleanup: Yes
Acid Cleanup: Yes
Florisil Cleanup: No

Sample Amount: 13.0 g-dry-wt
Final Extract Volume: 4.00 mL
Dilution Factor: 1.00
Silica Gel: No

Percent Moisture: 9.2%

CAS Number	Analyte	RL	Result
12674-11-2	Aroclor 1016	31	< 31 U
53469-21-9	Aroclor 1242	31	< 31 U
12672-29-6	Aroclor 1248	31	< 31 U
11097-69-1	Aroclor 1254	31	< 31 U
11096-82-5	Aroclor 1260	31	< 31 U
11104-28-2	Aroclor 1221	31	< 31 U
11141-16-5	Aroclor 1232	31	< 31 U
37324-23-5	Aroclor 1262	31	< 31 U

Reported in µg/kg (ppb)

PCB Surrogate Recovery

Decachlorobiphenyl	75.8%
Tetrachlorometaxylene	84.2%

ANALYTICAL RESOURCES INCORPORATED

ORGANICS ANALYSIS DATA SHEET
PCB by GC/ECD Method SW8082

Sample ID: MB-082511
METHOD BLANK

Lab Sample ID: MB-082511
LIMS ID: 11-18297
Matrix: Soil
Data Release Authorized: VB
Reported: 08/26/11

QC Report No: TJ66-The Boeing Company
Project: NBF-LTST
025.082.311.001
Date Sampled: NA
Date Received: NA

Date Extracted: 08/25/11
Date Analyzed: 08/25/11 15:19
Instrument/Analyst: ECD7/JGR
GPC Cleanup: No
Sulfur Cleanup: Yes
Acid Cleanup: Yes
Florisil Cleanup: No

Sample Amount: 12.0 g
Final Extract Volume: 4.00 mL
Dilution Factor: 1.00
Silica Gel: No

Percent Moisture: NA

CAS Number	Analyte	RL	Result
12674-11-2	Aroclor 1016	33	< 33 U
53469-21-9	Aroclor 1242	33	< 33 U
12672-29-6	Aroclor 1248	33	< 33 U
11097-69-1	Aroclor 1254	33	< 33 U
11096-82-5	Aroclor 1260	33	< 33 U
11104-28-2	Aroclor 1221	33	< 33 U
11141-16-5	Aroclor 1232	33	< 33 U
37324-23-5	Aroclor 1262	33	< 33 U

Reported in µg/kg (ppb)

PCB Surrogate Recovery

Decachlorobiphenyl	78.8%
Tetrachlorometaxylene	83.0%

ANALYTICAL RESOURCES INCORPORATED

SW8082/PCB SOIL/SEDIMENT SURROGATE RECOVERY SUMMARY

Matrix: Soil

QC Report No: TJ66-The Boeing Company
Project: NBF-LTST
025.082.311.001

Client ID	DCBP % REC	DCBP LCL-UCL	TCMX % REC	TCMX LCL-UCL	TOT OUT
MB-082511	78.8%	51-112	83.0%	46-111	0
LCS-082511	79.0%	51-112	81.2%	46-111	0
LCSD-082511	85.0%	51-112	87.2%	46-111	0
NBF-RRSS-A-082411	75.8%	42-127	84.2%	50-114	0

Microwave (MARS) Control Limits PCBSMI
Prep Method: SW3546
Log Number Range: 11-18297 to 11-18297

FORM-II SW8082

ANALYTICAL RESOURCES INCORPORATED

ORGANICS ANALYSIS DATA SHEET
PCB by GC/ECD Method SW8082

Sample ID: LCS-082511
LCS/LCSD

Lab Sample ID: LCS-082511
LIMS ID: 11-18297
Matrix: Soil
Data Release Authorized: VB
Reported: 08/26/11

QC Report No: TJ66-The Boeing Company
Project: NBF-LTST
025.082.311.001
Date Sampled: NA
Date Received: NA

Date Extracted LCS/LCSD: 08/25/11

Date Analyzed LCS: 08/25/11 15:42
LCSD: 08/25/11 16:04
Instrument/Analyst LCS: ECD7/JGR
LCSD: ECD7/JGR
GPC Cleanup: No
Sulfur Cleanup: Yes
Acid Cleanup: Yes
Florisil Cleanup: No

Sample Amount LCS: 12.0 g-dry-wt
LCSD: 12.0 g-dry-wt
Final Extract Volume LCS: 4.00 mL
LCSD: 4.00 mL
Dilution Factor LCS: 1.00
LCSD: 1.00
Silica Gel: No

Percent Moisture: NA

Analyte	LCS	Spike Added-LCS	LCS Recovery	LCSD	Spike Added-LCSD	LCSD Recovery	RPD
Aroclor 1016	138	167	82.6%	149	167	89.2%	7.7%
Aroclor 1260	152	167	91.0%	163	167	97.6%	7.0%

PCB Surrogate Recovery

	LCS	LCSD
Decachlorobiphenyl	79.0%	85.0%
Tetrachlorometaxylene	81.2%	87.2%

Results reported in µg/kg (ppb)
RPD calculated using sample concentrations per SW846.

ANALYTICAL RESOURCES INCORPORATED

ORGANICS ANALYSIS DATA SHEET
TPHG by Method NWTPHG
Matrix: Soil

Data Release Authorized: VD
Reported: 08/25/11

QC Report No: TJ66-The Boeing Company
Project: NBF-LTST
Event: 025.082.311.001
Date Sampled: 08/24/11
Date Received: 08/24/11

ARI ID	Client ID	Analysis Date	Basis	Range	Result
MB-082411	Method Blank	08/24/11	Dry	Gasoline	< 5.0 U
11-18297		PID2		HC ID	---
				Trifluorotoluene	95.3%
				Bromobenzene	94.9%
TJ66A	NBF-RRSS-A-082411	08/24/11	Dry	Gasoline	< 6.5 U
11-18297		PID2		HC ID	---
				Trifluorotoluene	110%
				Bromobenzene	106%

Gasoline values reported in mg/kg (ppm)

Quantitation on total peaks in the gasoline range from Toluene to Naphthalene.

GAS: Indicates the presence of gasoline or weathered gasoline.
GRO: Positive result that does not match an identifiable gasoline pattern.

Results corrected for soil moisture content per Section 11.10.5 of EPA Method 8000C.

ANALYTICAL RESOURCES INCORPORATED

TPHG SOIL SURROGATE RECOVERY SUMMARY

ARI Job: TJ66
Matrix: Soil

QC Report No: TJ66-The Boeing Company
Project: NBF-LTST
Event: 025.082.311.001

Client ID	BFB	TFT	BBZ	TOT OUT
MB-082411	NA	95.3%	94.9%	0
LCS-082411	NA	96.5%	93.1%	0
LCSD-082411	NA	101%	95.4%	0
NBF-RRSS-A-082411	NA	110%	106%	0

	LCS/MB LIMITS	QC LIMITS
(BFB) = Bromofluorobenzene	(70-130)	(70-130)
(TFT) = Trifluorotoluene	(80-120)	(66-123)
(BBZ) = Bromobenzene	(80-120)	(62-130)

Log Number Range: 11-18297 to 11-18297

FORM II TPHG

ANALYTICAL RESOURCES INCORPORATED

ORGANICS ANALYSIS DATA SHEET
TPHG by Method NWTPHG

Sample ID: LCS-082411
LAB CONTROL SAMPLE

Lab Sample ID: LCS-082411
LIMS ID: 11-18297
Matrix: Soil
Data Release Authorized: VT
Reported: 08/25/11

QC Report No: TJ66-The Boeing Company
Project: NBF-LTST
Event: 025.082.311.001
Date Sampled: NA
Date Received: NA

Date Analyzed LCS: 08/24/11 12:46
LCSD: 08/24/11 13:13
Instrument/Analyst LCS: PID2/MS
LCSD: PID2/MS

Purge Volume: 5.0 mL

Sample Amount LCS: 100 mg-dry-wt
LCSD: 100 mg-dry-wt

Analyte	LCS	Spike Added-LCS	LCS Recovery	LCSD	Spike Added-LCSD	LCSD Recovery	RPD
Gasoline Range Hydrocarbons	52.7	50.0	105%	48.6	50.0	97.2%	8.1%

Reported in mg/kg (ppm)

RPD calculated using sample concentrations per SW846.

TPHG Surrogate Recovery

	LCS	LCSD
Trifluorotoluene	96.5%	101%
Bromobenzene	93.1%	95.4%

ANALYTICAL RESOURCES INCORPORATED

INORGANICS ANALYSIS DATA SHEET
TOTAL METALS

Sample ID: NBF-RRSS-A-082411
SAMPLE

Lab Sample ID: TJ66A
LIMS ID: 11-18297
Matrix: Soil
Data Release Authorized:
Reported: 08/29/11

QC Report No: TJ66-The Boeing Company
Project: NBF-LTST
025.082.311.001
Date Sampled: 08/24/11
Date Received: 08/24/11

Percent Total Solids: 91.8%

Prep Meth	Prep Date	Analysis Method	Analysis Date	CAS Number	Analyte	RL	mg/kg-dry	Q
3050B	08/24/11	6010B	08/25/11	7440-38-2	Arsenic	5	5	U
3050B	08/24/11	6010B	08/25/11	**7440-43-9**	**Cadmium**	0.2	**0.2**	
3050B	08/24/11	6010B	08/25/11	**7440-47-3**	**Chromium**	0.5	**11.1**	
3050B	08/24/11	6010B	08/25/11	**7439-92-1**	**Lead**	2	**4**	
CLP	08/24/11	7471A	08/26/11	7439-97-6	Mercury	0.02	0.02	U

U-Analyte undetected at given RL
RL-Reporting Limit

ANALYTICAL RESOURCES INCORPORATED

INORGANICS ANALYSIS DATA SHEET
TOTAL METALS

Sample ID: METHOD BLANK

Lab Sample ID: TJ66MB
LIMS ID: 11-18297
Matrix: Soil
Data Release Authorized:
Reported: 08/29/11

QC Report No: TJ66-The Boeing Company
Project: NBF-LTST
025.082.311.001
Date Sampled: NA
Date Received: NA

Percent Total Solids: NA

Prep Meth	Prep Date	Analysis Method	Analysis Date	CAS Number	Analyte	RL	mg/kg-dry	Q
3050B	08/24/11	6010B	08/25/11	7440-38-2	Arsenic	5	5	U
3050B	08/24/11	6010B	08/25/11	7440-43-9	Cadmium	0.2	0.2	U
3050B	08/24/11	6010B	08/25/11	7440-47-3	Chromium	0.5	0.5	U
3050B	08/24/11	6010B	08/25/11	7439-92-1	Lead	2	2	U
CLP	08/24/11	7471A	08/26/11	7439-97-6	Mercury	0.02	0.02	U

U-Analyte undetected at given RL
RL-Reporting Limit

ANALYTICAL RESOURCES INCORPORATED

INORGANICS ANALYSIS DATA SHEET
TOTAL METALS

Sample ID: LAB CONTROL

Lab Sample ID: TJ66LCS
LIMS ID: 11-18297
Matrix: Soil
Data Release Authorized
Reported: 08/29/11

QC Report No: TJ66-The Boeing Company
Project: NBF-LTST
025.082.311.001
Date Sampled: NA
Date Received: NA

BLANK SPIKE QUALITY CONTROL REPORT

Analyte	Analysis Method	Spike Found	Spike Added	% Recovery	Q
Arsenic	6010B	196	200	98.0%	
Cadmium	6010B	51.4	50.0	103%	
Chromium	6010B	50.3	50.0	101%	
Lead	6010B	193	200	96.5%	
Mercury	7471A	0.56	0.50	112%	

Reported in mg/kg-dry

N-Control limit not met
NA-Not Applicable, Analyte Not Spiked
Control Limits: 80-120%

ANALYTICAL RESOURCES INCORPORATED

ORGANICS ANALYSIS DATA SHEET
TOTAL DIESEL RANGE HYDROCARBONS
NWTPHD by GC/FID
Page 1 of 1
Matrix: Soil

QC Report No: TJ66-The Boeing Company
Project: NBF-LTST
025.082.311.001
Date Received: 08/24/11

Data Release Authorized: VB
Reported: 08/26/11

ARI ID	Sample ID	Extraction Date	Analysis Date	EFV DL	Range	RL	Result
MB-082511	Method Blank	08/25/11	08/25/11	1.00	Diesel	5.0	< 5.0 U
11-18297	HC ID: ---		FID3B	1.0	Motor Oil	10	< 10 U
					o-Terphenyl		95.0%
TJ66A	NBF-RRSS-A-082411	08/25/11	08/25/11	1.00	**Diesel**	**5.5**	**12**
11-18297	HC ID: **DRO/MOTOR OIL**		FID3B	1.0	**Motor Oil**	**11**	**60**
					o-Terphenyl		79.9%

Reported in mg/kg (ppm)

EFV-Effective Final Volume in mL.
DL-Dilution of extract prior to analysis.
RL-Reporting limit.

Diesel quantitation on total peaks in the range from C12 to C24.
Motor Oil quantitation on total peaks in the range from C24 to C38.
HC ID: DRO/RRO indicates results of organics or additional hydrocarbons in ranges are not identifiable.

ANALYTICAL RESOURCES INCORPORATED

TPHD SURROGATE RECOVERY SUMMARY

Matrix: Soil

QC Report No: TJ66-The Boeing Company
Project: NBF-LTST
025.082.311.001

Client ID	OTER	TOT OUT
082511MBS	95.0%	0
082511LCS	86.1%	0
082511LCSD	86.9%	0
NBF-RRSS-A-082411	79.9%	0

	LCS/MB LIMITS	QC LIMITS
(OTER) = o-Terphenyl	(50-150)	(50-150)

Prep Method: SW3546
Log Number Range: 11-18297 to 11-18297

FORM-II TPHD

ANALYTICAL RESOURCES INCORPORATED

ORGANICS ANALYSIS DATA SHEET
NWTPHD by GC/FID

Sample ID: LCS-082511
LCS/LCSD

Lab Sample ID: LCS-082511
LIMS ID: 11-18297
Matrix: Soil
Data Release Authorized: VJ
Reported: 08/26/11

QC Report No: TJ66-The Boeing Company
Project: NBF-LTST
025.082.311.001
Date Sampled: NA
Date Received: NA

Date Extracted LCS/LCSD: 08/25/11

Date Analyzed LCS: 08/25/11 15:21
LCSD: 08/25/11 16:30
Instrument/Analyst LCS: FID3B/MS
LCSD: FID3B/MS

Sample Amount LCS: 10.0 g-dry-wt
LCSD: 10.0 g-dry-wt
Final Extract Volume LCS: 1.0 mL
LCSD: 1.0 mL
Dilution Factor LCS: 1.00
LCSD: 1.00

Range	LCS	Spike Added-LCS	LCS Recovery	LCSD	Spike Added-LCSD	LCSD Recovery	RPD
Diesel	131	150	87.3%	133	150	88.7%	1.5%

TPHD Surrogate Recovery

	LCS	LCSD
o-Terphenyl	86.1%	86.9%

Results reported in mg/kg
RPD calculated using sample concentrations per SW846.

ANALYTICAL RESOURCES INCORPORATED

TOTAL DIESEL RANGE HYDROCARBONS-EXTRACTION REPORT

Matrix: Soil
Date Received: 08/24/11

ARI Job: TJ66
Project: NBF-LTST
025.082.311.001

ARI ID	Client ID	Client Amt	Final Vol	Basis	Prep Date
11-18297-082511MB1	Method Blank	10.0 g	1.00 mL	-	08/25/11
11-18297-082511LCS1	Lab Control	10.0 g	1.00 mL	-	08/25/11
11-18297-082511LCSD1	Lab Control Dup	10.0 g	1.00 mL	-	08/25/11
11-18297-TJ66A	NBF-RRSS-A-082411	9.15 g	1.00 mL	D	08/25/11

Basis: D=Dry Weight W=As Received

Analytical Resources, Incorporated
Analytical Chemists and Consultants

September 12, 2011

Jeremy Davis
Landau Associates, Inc.
130 Second Ave
Edmonds, WA 98020

RE: Project: NBF – LTST
ARI Job: TK54

Dear Jeremy:

Please find enclosed the Chain of Custody (COC) record, sample receipt documentation, and analytical results for the above referenced project. Analytical Resources, Inc. (ARI) accepted one soil sample in good condition on August 31, 2011. One cooler was received with a temperature of 4.9°C.

The samples were analyzed for PCBs, NWTPH-Dx, NWTPH-Gx and Total Metals, as requested on the COC.

There were no irregularities with the samples.

Quality control analysis results are included for your review. Copies of the reports and all associated raw data will be kept on file electronically at ARI. If you have any questions or require additional information, please contact me at your convenience.

Sincerely,
ANALYTICAL RESOURCES, INC

Kelly Bottem
Client Services Manager
(206) 695-6211
kellyb@arilabs.com
www.arilabs.com

cc: Carl Bach, The Boeing Company, P.O. Box 3707, M/S 1W-12, Seattle, WA 98124-2207

4611 South 134th Place, Suite 100 • Tukwila WA 98168 • **206-695-6200** • **206-695-6201** fax

LANDAU ASSOCIATES

☒ Seattle/Edmonds (425) 778-0907
☐ Tacoma (253) 926-2493
☐ Spokane (509) 327-9737
☐ Portland (503) 542-1080
☐ _____

TK54

Date 8/31/11

Page 1 of 1

Chain-of-Custody Record

Project Name NBF-LTST Project No. _____

Project Location/Event NBF-LTST

Sampler's Name JEREMY DAVIS

Project Contact Jeremy D., Carl B., Joe K.

Send Results To Jeremy D., Carl B., Joe K.

Turnaround Time
☒ Standard
☐ Accelerated
☐ _____

Testing Parameters

Sample I.D.	Date	Time	Matrix	No. of Containers	PCBs	NWTPH-Gx	NWTPH-Dx	Metals (MTCA-5)								
~~NBF-LTST-A-083111~~ JMD	8/31/11	1035	S	2	X	X	X	X								
NBF-RRSS-A-083111																

Observations/Comments

~~X Allow water samples to settle, collect aliquot from clear portion~~ NA JMD

~~X NWTPH-Dx - run acid wash/silica gel cleanup~~ Not Nec JMD

___ run samples standardized to _____ product

___ Analyze for EPH if no specific product identified

VOC/BTEX/VPH (soil):
___ non-preserved
___ preserved w/methanol
___ preserved w/sodium bisulfate
___ Freeze upon receipt

___ Dissolved metal water samples field filtered

Other
Arsenic Cadmium Chromium
Lead Mercury

Special Shipment/Handling or Storage Requirements Cooler with Wet Ice

Method of Shipment Drop off @ ARI

Relinquished by	Received by	Relinquished by	Received by
Signature	Signature	Signature	Signature
Jeremy Davis	Taylor Streeter		
Printed Name	Printed Name	Printed Name	Printed Name
LAI	ARI		
Company	Company	Company	Company
Date 8/31/11 Time 1225	Date 8-31-11 Time 1225	Date _____ Time _____	Date _____ Time _____

WHITE COPY - Project File YELLOW COPY - Laboratory PINK COPY - Client Representative

Rev 8/09

Analytical Resources, Incorporated
Analytical Chemists and Consultants

Cooler Receipt Form

ARI Client: Boeing

Project Name: NBF-RRSS

COC No(s): _____ NA

Delivered by: Fed-Ex UPS Courier Hand Delivered Other: _____

Assigned ARI Job No: TK54

Tracking No: _____ NA

Preliminary Examination Phase:

Were intact, properly signed and dated custody seals attached to the outside of to cooler? YES NO

Were custody papers included with the cooler? ..... YES NO

Were custody papers properly filled out (ink, signed, etc.) ..... YES NO

Temperature of Cooler(s) (°C) (recommended 2.0-6.0 °C for chemistry)..... 4.9 ____ ____ ____ ____ ____

If cooler temperature is out of compliance fill out form 00070F

Temp Gun ID#: 9094119

Cooler Accepted by: _____ Date: 8-31-11 Time: 12 20

Complete custody forms and attach all shipping documents

Log-In Phase:

Was a temperature blank included in the cooler? ..... YES NO

What kind of packing material was used? ... Bubble Wrap Wet Ice Gel Packs Baggies Foam Block Paper Other: _____

Was sufficient ice used (if appropriate)? ..... NA YES NO

Were all bottles sealed in individual plastic bags? ..... YES NO

Did all bottles arrive in good condition (unbroken)? ..... YES NO

Were all bottle labels complete and legible? ..... YES NO

Did the number of containers listed on COC match with the number of containers received? ..... YES NO

Did all bottle labels and tags agree with custody papers? ..... YES NO

Were all bottles used correct for the requested analyses? ..... YES NO

Do any of the analyses (bottles) require preservation? (attach preservation sheet, excluding VOCs)... NA YES NO

Were all VOC vials free of air bubbles? ..... NA YES NO

Was sufficient amount of sample sent in each bottle? ..... YES NO

Date VOC Trip Blank was made at ARI..... NA _____

Was Sample Split by ARI : NA YES Date/Time: _____ Equipment: _____ Split by: _____

Samples Logged by: AV Date: 8/31/11 Time: 1240

***** Notify Project Manager of discrepancies or concerns *****

Sample ID on Bottle	Sample ID on COC	Sample ID on Bottle	Sample ID on COC

Additional Notes, Discrepancies, & Resolutions:

By: Date:

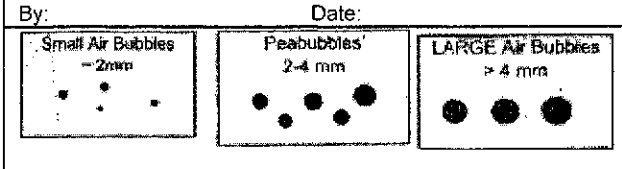

Small → "sm"
Peabubbles → "pb"
Large → "lg"
Headspace → "hs"

Sample ID Cross Reference Report

ANALYTICAL RESOURCES INCORPORATED

ARI Job No: TK54
Client: The Boeing Company
Project Event: N/A
Project Name: NBF-LTST

	Sample ID	ARI Lab ID	ARI LIMS ID	Matrix	Sample Date/Time	VTSR
1.	NBF-RRSS-A-083111	TK54A	11-18905	Soil	08/31/11 10:35	08/31/11 12:25

Printed 08/31/11

ANALYTICAL RESOURCES INCORPORATED

ORGANICS ANALYSIS DATA SHEET
TPHG by Method NWTPHG
Matrix: Soil

Data Release Authorized:
Reported: 09/12/11

QC Report No: TK54-The Boeing Company
Project: NBF-LTST
Event: NA
Date Sampled: 08/31/11
Date Received: 08/31/11

ARI ID	Client ID	Analysis Date	Basis	Range	Result
MB-090611	Method Blank	09/06/11	Dry	Gasoline	< 5.0 U
11-18905		PID3		HC ID	---
				Trifluorotoluene	96.9%
				Bromobenzene	92.9%
TK54A	NBF-RRSS-A-083111	09/06/11	Dry	Gasoline	< 6.4 U
11-18905		PID3		HC ID	---
				Trifluorotoluene	97.4%
				Bromobenzene	94.3%

Gasoline values reported in mg/kg (ppm)

Quantitation on total peaks in the gasoline range from Toluene to Naphthalene.

GAS: Indicates the presence of gasoline or weathered gasoline.
GRO: Positive result that does not match an identifiable gasoline pattern.

Results corrected for soil moisture content per Section 11.10.5 of EPA Method 8000C.

ANALYTICAL RESOURCES INCORPORATED

TPHG SOIL SURROGATE RECOVERY SUMMARY

ARI Job: TK54
Matrix: Soil

QC Report No: TK54-The Boeing Company
Project: NBF-LTST
Event: NA

Client ID	BFB	TFT	BBZ	TOT OUT
MB-090611	NA	96.9%	92.9%	0
LCS-090611	NA	99.3%	95.6%	0
LCSD-090611	NA	104%	99.8%	0
NBF-RRSS-A-083111	NA	97.4%	94.3%	0

	LCS/MB LIMITS	QC LIMITS
(BFB) = Bromofluorobenzene	(70-130)	(70-130)
(TFT) = Trifluorotoluene	(80-120)	(66-123)
(BBZ) = Bromobenzene	(80-120)	(62-130)

Log Number Range: 11-18905 to 11-18905

FORM II TPHG

ANALYTICAL RESOURCES INCORPORATED

ORGANICS ANALYSIS DATA SHEET
TPHG by Method NWTPHG

Sample ID: LCS-090611
LAB CONTROL SAMPLE

Lab Sample ID: LCS-090611
LIMS ID: 11-18905
Matrix: Soil
Data Release Authorized:
Reported: 09/12/11

QC Report No: TK54-The Boeing Company
Project: NBF-LTST
Event: NA
Date Sampled: NA
Date Received: NA

Date Analyzed LCS: 09/06/11 08:57
LCSD: 09/06/11 09:24
Instrument/Analyst LCS: PID3/MH
LCSD: PID3/MH

Purge Volume: 5.0 mL

Sample Amount LCS: 100 mg-dry-wt
LCSD: 100 mg-dry-wt

Analyte	LCS	Spike Added-LCS	LCS Recovery	LCSD	Spike Added-LCSD	LCSD Recovery	RPD
Gasoline Range Hydrocarbons	46.4	50.0	92.8%	49.4	50.0	98.8%	6.3%

Reported in mg/kg (ppm)

RPD calculated using sample concentrations per SW846.

TPHG Surrogate Recovery

	LCS	LCSD
Trifluorotoluene	99.3%	104%
Bromobenzene	95.6%	99.8%

ANALYTICAL RESOURCES INCORPORATED

ORGANICS ANALYSIS DATA SHEET
TOTAL DIESEL RANGE HYDROCARBONS
NWTPHD by GC/FID
Page 1 of 1
Matrix: Soil

QC Report No: TK54-The Boeing Company
Project: NBF-LTST

Date Received: 08/31/11

Data Release Authorized:
Reported: 09/06/11

ARI ID	Sample ID	Extraction Date	Analysis Date	EFV DL	Range	RL	Result
MB-090111	Method Blank	09/01/11	09/02/11	1.00	Diesel	5.0	< 5.0 U
11-18905	HC ID: ---		FID3B	1.0	Motor Oil	10	< 10 U
					o-Terphenyl		89.4%
TK54A	NBF-RRSS-A-083111	09/01/11	09/02/11	1.00	**Diesel**	**5.4**	**12**
11-18905	HC ID: **DIESEL/MOTOR OIL**		FID3B	1.0	**Motor Oil**	**11**	**41**
					o-Terphenyl		66.2%

Reported in mg/kg (ppm)

EFV-Effective Final Volume in mL.
DL-Dilution of extract prior to analysis.
RL-Reporting limit.

Diesel quantitation on total peaks in the range from C12 to C24.
Motor Oil quantitation on total peaks in the range from C24 to C38.
HC ID: DRO/RRO indicates results of organics or additional hydrocarbons in ranges are not identifiable.

ANALYTICAL RESOURCES INCORPORATED

TPHD SURROGATE RECOVERY SUMMARY

Matrix: Soil

QC Report No: TK54-The Boeing Company
Project: NBF-LTST

Client ID	OTER	TOT OUT
090111MBS	89.4%	0
090111LCS	81.7%	0
090111LCSD	86.5%	0
NBF-RRSS-A-083111	66.2%	0

	LCS/MB LIMITS	QC LIMITS
(OTER) = o-Terphenyl	(50-150)	(50-150)

Prep Method: SW3546
Log Number Range: 11-18905 to 11-18905

FORM-II TPHD

ANALYTICAL RESOURCES INCORPORATED

ORGANICS ANALYSIS DATA SHEET
NWTPHD by GC/FID

Sample ID: LCS-090111
LCS/LCSD

Lab Sample ID: LCS-090111
LIMS ID: 11-18905
Matrix: Soil
Data Release Authorized:
Reported: 09/06/11

QC Report No: TK54-The Boeing Company
Project: NBF-LTST

Date Sampled: NA
Date Received: NA

Date Extracted LCS/LCSD: 09/01/11

Date Analyzed LCS: 09/02/11 15:18
LCSD: 09/02/11 15:40
Instrument/Analyst LCS: FID3B/MS
LCSD: FID3B/MS

Sample Amount LCS: 10.0 g-dry-wt
LCSD: 10.0 g-dry-wt
Final Extract Volume LCS: 1.0 mL
LCSD: 1.0 mL
Dilution Factor LCS: 1.00
LCSD: 1.00

Range	LCS	Spike Added-LCS	LCS Recovery	LCSD	Spike Added-LCSD	LCSD Recovery	RPD
Diesel	127	150	84.7%	132	150	88.0%	3.9%

TPHD Surrogate Recovery

	LCS	LCSD
o-Terphenyl	81.7%	86.5%

Results reported in mg/kg
RPD calculated using sample concentrations per SW846.

ANALYTICAL RESOURCES INCORPORATED

TOTAL DIESEL RANGE HYDROCARBONS-EXTRACTION REPORT

ARI Job: TK54
Project: NBF-LTST

Matrix: Soil
Date Received: 08/31/11

ARI ID	Client ID	Client Amt	Final Vol	Basis	Prep Date
11-18905-090111MB1	Method Blank	10.0 g	1.00 mL	-	09/01/11
11-18905-090111LCS1	Lab Control	10.0 g	1.00 mL	-	09/01/11
11-18905-090111LCSD1	Lab Control Dup	10.0 g	1.00 mL	-	09/01/11
11-18905-TK54A	NBF-RRSS-A-083111	9.29 g	1.00 mL	D	09/01/11

Basis: D=Dry Weight W=As Received

ANALYTICAL RESOURCES INCORPORATED

ORGANICS ANALYSIS DATA SHEET
PCB by GC/ECD Method SW8082

Sample ID: NBF-RRSS-A-083111
SAMPLE

Lab Sample ID: TK54A
LIMS ID: 11-18905
Matrix: Soil
Data Release Authorized:
Reported: 09/08/11

QC Report No: TK54-The Boeing Company
Project: NBF-LTST

Date Sampled: 08/31/11
Date Received: 08/31/11

Date Extracted: 09/02/11
Date Analyzed: 09/07/11 15:24
Instrument/Analyst: ECD5/JGR
GPC Cleanup: No
Sulfur Cleanup: Yes
Acid Cleanup: Yes
Florisil Cleanup: No

Sample Amount: 12.2 g-dry-wt
Final Extract Volume: 4.00 mL
Dilution Factor: 1.00
Silica Gel: No

Percent Moisture: 7.5%

CAS Number	Analyte	RL	Result
12674-11-2	Aroclor 1016	33	< 33 U
53469-21-9	Aroclor 1242	33	< 33 U
12672-29-6	Aroclor 1248	33	< 33 U
11097-69-1	Aroclor 1254	33	< 33 U
11096-82-5	Aroclor 1260	33	< 33 U
11104-28-2	Aroclor 1221	33	< 33 U
11141-16-5	Aroclor 1232	33	< 33 U
37324-23-5	Aroclor 1262	33	< 33 U

Reported in µg/kg (ppb)

PCB Surrogate Recovery

Decachlorobiphenyl	76.0%
Tetrachlorometaxylene	84.0%

ANALYTICAL RESOURCES INCORPORATED

ORGANICS ANALYSIS DATA SHEET
PCB by GC/ECD Method SW8082

Sample ID: MB-090211
METHOD BLANK

Lab Sample ID: MB-090211
LIMS ID: 11-18905
Matrix: Soil
Data Release Authorized: MW
Reported: 09/08/11

QC Report No: TK54-The Boeing Company
Project: NBF-LTST

Date Sampled: NA
Date Received: NA

Date Extracted: 09/02/11
Date Analyzed: 09/07/11 14:08
Instrument/Analyst: ECD5/JGR
GPC Cleanup: No
Sulfur Cleanup: Yes
Acid Cleanup: Yes
Florisil Cleanup: No

Sample Amount: 12.0 g
Final Extract Volume: 4.00 mL
Dilution Factor: 1.00
Silica Gel: No

Percent Moisture: NA

CAS Number	Analyte	RL	Result
12674-11-2	Aroclor 1016	33	< 33 U
53469-21-9	Aroclor 1242	33	< 33 U
12672-29-6	Aroclor 1248	33	< 33 U
11097-69-1	Aroclor 1254	33	< 33 U
11096-82-5	Aroclor 1260	33	< 33 U
11104-28-2	Aroclor 1221	33	< 33 U
11141-16-5	Aroclor 1232	33	< 33 U
37324-23-5	Aroclor 1262	33	< 33 U

Reported in µg/kg (ppb)

PCB Surrogate Recovery

Decachlorobiphenyl	89.2%
Tetrachlorometaxylene	90.2%

ANALYTICAL RESOURCES INCORPORATED

SW8082/PCB SOIL/SEDIMENT SURROGATE RECOVERY SUMMARY

Matrix: Soil

QC Report No: TK54-The Boeing Company
Project: NBF-LTST

Client ID	DCBP % REC	DCBP LCL-UCL	TCMX % REC	TCMX LCL-UCL	TOT OUT
MB-090211	89.2%	51-112	90.2%	46-111	0
LCS-090211	82.5%	51-112	82.2%	46-111	0
LCSD-090211	80.0%	51-112	77.0%	46-111	0
NBF-RRSS-A-083111	76.0%	42-127	84.0%	50-114	0

Microwave (MARS) Control Limits PCBSMI
Prep Method: SW3546
Log Number Range: 11-18905 to 11-18905

FORM-II SW8082

ANALYTICAL RESOURCES INCORPORATED

ORGANICS ANALYSIS DATA SHEET
PCB by GC/ECD Method SW8082

Sample ID: LCS-090211
LCS/LCSD

Lab Sample ID: LCS-090211
LIMS ID: 11-18905
Matrix: Soil
Data Release Authorized:
Reported: 09/08/11

QC Report No: TK54-The Boeing Company
Project: NBF-LTST

Date Sampled: NA
Date Received: NA

Date Extracted LCS/LCSD: 09/02/11

Date Analyzed LCS: 09/07/11 14:27
LCSD: 09/07/11 14:46
Instrument/Analyst LCS: ECD5/JGR
LCSD: ECD5/JGR
GPC Cleanup: No
Sulfur Cleanup: Yes
Acid Cleanup: Yes
Florisil Cleanup: No

Sample Amount LCS: 12.0 g-dry-wt
LCSD: 12.0 g-dry-wt
Final Extract Volume LCS: 4.00 mL
LCSD: 4.00 mL
Dilution Factor LCS: 1.00
LCSD: 1.00
Silica Gel: No

Percent Moisture: NA

Analyte	LCS	Spike Added-LCS	LCS Recovery	LCSD	Spike Added-LCSD	LCSD Recovery	RPD
Aroclor 1016	142	167	85.0%	133	167	79.6%	6.5%
Aroclor 1260	150	167	89.8%	145	167	86.8%	3.4%

PCB Surrogate Recovery

	LCS	LCSD
Decachlorobiphenyl	82.5%	80.0%
Tetrachlorometaxylene	82.2%	77.0%

Results reported in µg/kg (ppb)
RPD calculated using sample concentrations per SW846.

ANALYTICAL RESOURCES INCORPORATED

INORGANICS ANALYSIS DATA SHEET
TOTAL METALS

Sample ID: NBF-RRSS-A-083111
SAMPLE

Lab Sample ID: TK54A
LIMS ID: 11-18905
Matrix: Soil
Data Release Authorized:
Reported: 09/09/11

QC Report No: TK54-The Boeing Company
Project: NBF-LTST

Date Sampled: 08/31/11
Date Received: 08/31/11

Percent Total Solids: 90.3%

Prep Meth	Prep Date	Analysis Method	Analysis Date	CAS Number	Analyte	RL	mg/kg-dry	Q
3050B	09/06/11	6010B	09/07/11	7440-38-2	Arsenic	5	5	U
3050B	09/06/11	6010B	09/07/11	7440-43-9	Cadmium	0.2	0.2	U
3050B	09/06/11	6010B	09/07/11	**7440-47-3**	**Chromium**	0.5	**18.9**	
3050B	09/06/11	6010B	09/07/11	**7439-92-1**	**Lead**	2	**9**	
CLP	09/06/11	7471A	09/08/11	7439-97-6	Mercury	0.02	0.02	U

U-Analyte undetected at given RL
RL-Reporting Limit

ANALYTICAL RESOURCES INCORPORATED

INORGANICS ANALYSIS DATA SHEET
TOTAL METALS

Sample ID: METHOD BLANK

Lab Sample ID: TK54MB
LIMS ID: 11-18905
Matrix: Soil
Data Release Authorized:
Reported: 09/09/11

QC Report No: TK54-The Boeing Company
Project: NBF-LTST

Date Sampled: NA
Date Received: NA

Percent Total Solids: NA

Prep Meth	Prep Date	Analysis Method	Analysis Date	CAS Number	Analyte	RL	mg/kg-dry	Q
3050B	09/06/11	6010B	09/07/11	7440-38-2	Arsenic	5	5	U
3050B	09/06/11	6010B	09/07/11	7440-43-9	Cadmium	0.2	0.2	U
3050B	09/06/11	6010B	09/07/11	7440-47-3	Chromium	0.5	0.5	U
3050B	09/06/11	6010B	09/07/11	7439-92-1	Lead	2	2	U
CLP	09/06/11	7471A	09/08/11	7439-97-6	Mercury	0.02	0.02	U

U-Analyte undetected at given RL
RL-Reporting Limit

ANALYTICAL RESOURCES INCORPORATED

INORGANICS ANALYSIS DATA SHEET
TOTAL METALS

Sample ID: LAB CONTROL

Lab Sample ID: TK54LCS
LIMS ID: 11-18905
Matrix: Soil
Data Release Authorized:
Reported: 09/09/11

QC Report No: TK54-The Boeing Company
Project: NBF-LTST

Date Sampled: NA
Date Received: NA

BLANK SPIKE QUALITY CONTROL REPORT

Analyte	Analysis Method	Spike Found	Spike Added	% Recovery	Q
Arsenic	6010B	200	200	100%	
Cadmium	6010B	50.4	50.0	101%	
Chromium	6010B	51.0	50.0	102%	
Lead	6010B	198	200	99.0%	
Mercury	7471A	0.52	0.50	104%	

Reported in mg/kg-dry

N-Control limit not met
NA-Not Applicable, Analyte Not Spiked
Control Limits: 80-120%

Analytical Resources, Incorporated
Analytical Chemists and Consultants

September 23, 2011

Jeremy Davis
Landau Associates, Inc.
130 Second Ave
Edmonds, WA 98020

RE: Project: NBF – LTST 025.082.311.001
ARI Job: TL91

Dear Jeremy:

Please find enclosed the Chain of Custody (COC) record, sample receipt documentation, and analytical results for the above referenced project. Analytical Resources, Inc. (ARI) accepted one soil sample in good condition on September 12, 2011. One cooler was received with a temperature of 13.5°C.

The sample was analyzed for PCBs, NWTPH-Dx, NWTPH-Gx and Total Metals, as requested on the COC.

There were no irregularities with the samples.

Quality control analysis results are included for your review. Copies of the reports and all associated raw data will be kept on file electronically at ARI. If you have any questions or require additional information, please contact me at your convenience.

Sincerely,
ANALYTICAL RESOURCES, INC

Kelly Bottem
Client Services Manager
(206) 695-6211
kellyb@arilabs.com
www.arilabs.com

cc: Carl Bach, The Boeing Company, P.O. Box 3707, M/S 1W-12, Seattle, WA 98124-2207

4611 South 134th Place, Suite 100 • Tukwila WA 98168 • **206-695-6200** • **206-695-6201** fax

☒ Seattle/Edmonds (425) 778-0907
☐ Tacoma ~~(253) 926~~-2493
☐ Spokane (509) 327-9737
☐ Portland (503) 542-1080
☐ _____

LANDAU ASSOCIATES

Chain-of-Custody Record

TL91

Date 9/12/11
Page 1 of 1

Project Name NBF-CTST
Project No. 025,082,311.001
Project Location/Event NBF - CTST
Sampler's Name Jeremy Davis
Project Contact Jeremy D, Carl B, Joe K
Send Results To Jeremy D, Carl B, Joe K

Turnaround Time
☒ Standard
☐ Accelerated
☐ _____

Testing Parameters

Sample I.D.	Date	Time	Matrix	No. of Containers	PCBs	NWTPH-Dx	NWTPH-Gx	Metals - MTCA 5										
NBF-RRSS-A-091211	9/12/11	1430	S	2	6	10	10x											

Observations/Comments

~~X Allow water samples to settle, collect aliquot from clear portion~~ NA JMD

~~X NWTPH-Dx - run acid wash/silica gel cleanup~~ Not Nec. JMD

___ run samples standardized to _____ product

___ Analyze for EPH if no specific product identified

VOC/BTEX/VPH (soil):
___ non-preserved
___ preserved w/methanol
___ preserved w/sodium bisulfate
___ Freeze upon receipt

___ Dissolved metal water samples field filtered

Other * Arsenic, Cadmium, Chromium, Lead, Mercury

Special Shipment/Handling or Storage Requirements Cooler with wet ice

Method of Shipment Drop off @ ARI

Relinquished by	Received by	Relinquished by	Received by
Signature [signature]	Signature [signature]	Signature	Signature
Printed Name JEREMY DAVIS	Printed Name Taylor Streeter	Printed Name	Printed Name
Company LAI	Company ARI	Company	Company
Date 9/12/11 Time ~~1615~~ JMD	Date 9-12-11 Time 1615	Date Time	Date Time

WHITE COPY - Project File YELLOW COPY - Laboratory PINK COPY - Client Representative

Rev 8/09

Sample ID Cross Reference Report

ANALYTICAL RESOURCES INCORPORATED

ARI Job No: TL91
Client: The Boeing Company
Project Event: 025.082.311.001
Project Name: NBF-CTST

	Sample ID	ARI Lab ID	ARI LIMS ID	Matrix	Sample Date/Time	VTSR
1.	NBF-RRSS-A-091211	TL91A	11-19814	Soil	09/12/11 14:30	09/12/11 16:15

Printed 09/13/11

Analytical Resources, Incorporated
Analytical Chemists and Consultants

Cooler Receipt Form

ARI Client: Boeing

Project Name: NBF CTST

COC No(s): _____ NA

Delivered by: Fed-Ex UPS Courier Hand Delivered Other: _____

Assigned ARI Job No: 7L91

Tracking No: _____ NA

Preliminary Examination Phase:

Were intact, properly signed and dated custody seals attached to the outside of to cooler? YES NO

Were custody papers included with the cooler? ..... YES NO

Were custody papers properly filled out (ink, signed, etc.) ..... YES NO

Temperature of Cooler(s) (°C) (recommended 2.0-6.0 °C for chemistry)..... 13.5

If cooler temperature is out of compliance fill out form 00070F Temp Gun ID#: 90877952

Cooler Accepted by: TS Date: 9/12/11 Time: 1615

Complete custody forms and attach all shipping documents

Log-In Phase:

Was a temperature blank included in the cooler? ..... YES NO

What kind of packing material was used? ... Bubble Wrap Wet Ice Gel Packs Baggies Foam Block Paper Other: _____

Was sufficient ice used (if appropriate)? ..... NA YES NO

Were all bottles sealed in individual plastic bags? ..... YES NO

Did all bottles arrive in good condition (unbroken)? ..... YES NO

Were all bottle labels complete and legible? ..... YES NO

Did the number of containers listed on COC match with the number of containers received? ..... YES NO

Did all bottle labels and tags agree with custody papers? ..... YES NO

Were all bottles used correct for the requested analyses? ..... YES NO

Do any of the analyses (bottles) require preservation? (attach preservation sheet, excluding VOCs)... NA YES NO

Were all VOC vials free of air bubbles? ..... NA YES NO

Was sufficient amount of sample sent in each bottle? ..... YES NO

Date VOC Trip Blank was made at ARI..... NA _____

Was Sample Split by ARI : NA YES Date/Time: _____ Equipment: _____ Split by: _____

Samples Logged by: TS Date: 9/12/11 Time: 1615

***** Notify Project Manager of discrepancies or concerns *****

Sample ID on Bottle	Sample ID on COC	Sample ID on Bottle	Sample ID on COC

Additional Notes, Discrepancies, & Resolutions:

By: Date:

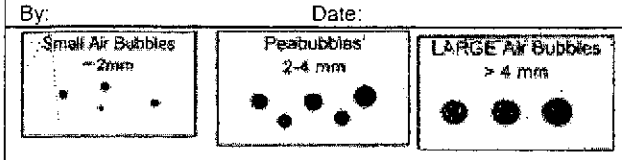

Small → "sm"
Peabubbles → "pb"
Large → "lg"
Headspace → "hs"

Analytical Resources, Incorporated
Analytical Chemists and Consultants

Cooler Temperature Compliance Form

Cooler#: 1 Temperature(°C): 13.5

Sample ID	Bottle Count	Bottle Type
All samples		
out of		
temp		
compliance		

Cooler#: _____ Temperature(°C): _____

Sample ID	Bottle Count	Bottle Type

Cooler#: _____ Temperature(°C): _____

Sample ID	Bottle Count	Bottle Type

Cooler#: _____ Temperature(°C): _____

Sample ID	Bottle Count	Bottle Type

Completed by: TS Date: 9-12-11 Time: 1830

ANALYTICAL RESOURCES INCORPORATED

ORGANICS ANALYSIS DATA SHEET
PCB by GC/ECD Method SW8082

Sample ID: NBF-RRSS-A-091211
SAMPLE

Lab Sample ID: TL91A
LIMS ID: 11-19814
Matrix: Soil
Data Release Authorized:
Reported: 09/23/11

QC Report No: TL91-The Boeing Company
Project: NBF-CTST
025.082.311.001
Date Sampled: 09/12/11
Date Received: 09/12/11

Date Extracted: 09/15/11
Date Analyzed: 09/20/11 23:59
Instrument/Analyst: ECD7/JGR
GPC Cleanup: No
Sulfur Cleanup: Yes
Acid Cleanup: Yes
Florisil Cleanup: No

Sample Amount: 12.9 g-dry-wt
Final Extract Volume: 4.00 mL
Dilution Factor: 1.00
Silica Gel: No

Percent Moisture: 8.4%

CAS Number	Analyte	RL	Result
12674-11-2	Aroclor 1016	31	< 31 U
53469-21-9	Aroclor 1242	31	< 31 U
12672-29-6	Aroclor 1248	31	< 31 U
11097-69-1	Aroclor 1254	31	< 31 U
11096-82-5	Aroclor 1260	31	< 31 U
11104-28-2	Aroclor 1221	31	< 31 U
11141-16-5	Aroclor 1232	31	< 31 U
37324-23-5	Aroclor 1262	31	< 31 U

Reported in µg/kg (ppb)

PCB Surrogate Recovery

Decachlorobiphenyl	71.8%
Tetrachlorometaxylene	73.0%

ANALYTICAL RESOURCES INCORPORATED

ORGANICS ANALYSIS DATA SHEET
PCB by GC/ECD Method SW8082

Sample ID: MB-091511
METHOD BLANK

Lab Sample ID: MB-091511
LIMS ID: 11-19814
Matrix: Soil
Data Release Authorized:
Reported: 09/23/11

QC Report No: TL91-The Boeing Company
Project: NBF-CTST
025.082.311.001
Date Sampled: NA
Date Received: NA

Date Extracted: 09/15/11
Date Analyzed: 09/20/11 17:52
Instrument/Analyst: ECD7/JGR
GPC Cleanup: No
Sulfur Cleanup: Yes
Acid Cleanup: Yes
Florisil Cleanup: No

Sample Amount: 12.0 g
Final Extract Volume: 4.00 mL
Dilution Factor: 1.00
Silica Gel: No

Percent Moisture: NA

CAS Number	Analyte	RL	Result
12674-11-2	Aroclor 1016	33	< 33 U
53469-21-9	Aroclor 1242	33	< 33 U
12672-29-6	Aroclor 1248	33	< 33 U
11097-69-1	Aroclor 1254	33	< 33 U
11096-82-5	Aroclor 1260	33	< 33 U
11104-28-2	Aroclor 1221	33	< 33 U
11141-16-5	Aroclor 1232	33	< 33 U
37324-23-5	Aroclor 1262	33	< 33 U

Reported in µg/kg (ppb)

PCB Surrogate Recovery

Decachlorobiphenyl	71.5%
Tetrachlorometaxylene	76.8%

ANALYTICAL RESOURCES INCORPORATED

SW8082/PCB SOIL/SEDIMENT SURROGATE RECOVERY SUMMARY

Matrix: Soil

QC Report No: TL91-The Boeing Company
Project: NBF-CTST
025.082.311.001

Client ID	DCBP % REC	DCBP LCL-UCL	TCMX % REC	TCMX LCL-UCL	TOT OUT
MB-091511	71.5%	51-112	76.8%	46-111	0
LCS-091511	68.2%	51-112	72.5%	46-111	0
LCSD-091511	72.2%	51-112	74.5%	46-111	0
NBF-RRSS-A-091211	71.8%	42-127	73.0%	50-114	0

Microwave (MARS) Control Limits PCBSMI
Prep Method: SW3546
Log Number Range: 11-19814 to 11-19814

FORM-II SW8082

ANALYTICAL RESOURCES INCORPORATED

ORGANICS ANALYSIS DATA SHEET
PCB by GC/ECD Method SW8082

Sample ID: LCS-091511
LCS/LCSD

Lab Sample ID: LCS-091511
LIMS ID: 11-19814
Matrix: Soil
Data Release Authorized:
Reported: 09/23/11

QC Report No: TL91-The Boeing Company
Project: NBF-CTST
025.082.311.001
Date Sampled: NA
Date Received: NA

Date Extracted LCS/LCSD: 09/15/11

Date Analyzed LCS: 09/20/11 18:15
LCSD: 09/20/11 18:38
Instrument/Analyst LCS: ECD7/JGR
LCSD: ECD7/JGR
GPC Cleanup: No
Sulfur Cleanup: Yes
Acid Cleanup: Yes
Florisil Cleanup: No

Sample Amount LCS: 12.0 g-dry-wt
LCSD: 12.0 g-dry-wt
Final Extract Volume LCS: 4.00 mL
LCSD: 4.00 mL
Dilution Factor LCS: 1.00
LCSD: 1.00
Silica Gel: No

Percent Moisture: NA

Analyte	LCS	Spike Added-LCS	LCS Recovery	LCSD	Spike Added-LCSD	LCSD Recovery	RPD
Aroclor 1016	117	167	70.1%	123	167	73.7%	5.0%
Aroclor 1260	123	167	73.7%	129	167	77.2%	4.8%

PCB Surrogate Recovery

	LCS	LCSD
Decachlorobiphenyl	68.2%	72.2%
Tetrachlorometaxylene	72.5%	74.5%

Results reported in µg/kg (ppb)
RPD calculated using sample concentrations per SW846.

ANALYTICAL RESOURCES INCORPORATED

ORGANICS ANALYSIS DATA SHEET
TOTAL DIESEL RANGE HYDROCARBONS
NWTPHD by GC/FID
Page 1 of 1
Matrix: Soil

QC Report No: TL91-The Boeing Company
Project: NBF-CTST
025.082.311.001
Date Received: 09/12/11

Data Release Authorized:
Reported: 09/16/11

ARI ID	Sample ID	Extraction Date	Analysis Date	EFV DL	Range	RL	Result
MB-091411	Method Blank	09/14/11	09/16/11	1.00	Diesel	5.0	< 5.0 U
11-19814	HC ID: ---		FID4A	1.0	Motor Oil	10	< 10 U
					o-Terphenyl		95.1%
TL91A	NBF-RRSS-A-091211	09/14/11	09/16/11	1.00	**Diesel**	**5.4**	**22**
11-19814	HC ID: **DIESEL/MOTOR OIL**		FID4A	1.0	**Motor Oil**	**11**	**55**
					o-Terphenyl		80.5%

Reported in mg/kg (ppm)

EFV-Effective Final Volume in mL.
DL-Dilution of extract prior to analysis.
RL-Reporting limit.

Diesel quantitation on total peaks in the range from C12 to C24.
Motor Oil quantitation on total peaks in the range from C24 to C38.
HC ID: DRO/RRO indicates results of organics or additional hydrocarbons in ranges are not identifiable.

ANALYTICAL RESOURCES INCORPORATED

ORGANICS ANALYSIS DATA SHEET
NWTPHD by GC/FID

Sample ID: LCS-091411
LCS/LCSD

Lab Sample ID: LCS-091411
LIMS ID: 11-19814
Matrix: Soil
Data Release Authorized:
Reported: 09/16/11

QC Report No: TL91-The Boeing Company
Project: NBF-CTST
025.082.311.001
Date Sampled: NA
Date Received: NA

Date Extracted LCS/LCSD: 09/14/11

Date Analyzed LCS: 09/16/11 10:23
LCSD: 09/16/11 10:46
Instrument/Analyst LCS: FID4A/MS
LCSD: FID4A/MS

Sample Amount LCS: 10.0 g-dry-wt
LCSD: 10.0 g-dry-wt
Final Extract Volume LCS: 1.0 mL
LCSD: 1.0 mL
Dilution Factor LCS: 1.00
LCSD: 1.00

Range	LCS	Spike Added-LCS	LCS Recovery	LCSD	Spike Added-LCSD	LCSD Recovery	RPD
Diesel	147	150	98.0%	145	150	96.7%	1.4%

TPHD Surrogate Recovery

	LCS	LCSD
o-Terphenyl	89.9%	91.6%

Results reported in mg/kg
RPD calculated using sample concentrations per SW846.

ANALYTICAL RESOURCES INCORPORATED

TPHD SURROGATE RECOVERY SUMMARY

Matrix: Soil

QC Report No: TL91-The Boeing Company
Project: NBF-CTST
025.082.311.001

Client ID	OTER	TOT OUT
091411MBS	95.1%	0
091411LCS	89.9%	0
091411LCSD	91.6%	0
NBF-RRSS-A-091211	80.5%	0

	LCS/MB LIMITS	QC LIMITS
(OTER) = o-Terphenyl	(50-150)	(50-150)

Prep Method: SW3546
Log Number Range: 11-19814 to 11-19814

FORM-II TPHD

ANALYTICAL RESOURCES INCORPORATED

TOTAL DIESEL RANGE HYDROCARBONS-EXTRACTION REPORT

ARI Job: TL91
Project: NBF-CTST
025.082.311.001

Matrix: Soil
Date Received: 09/12/11

ARI ID	Client ID	Client Amt	Final Vol	Basis	Prep Date
11-19814-091411MB1	Method Blank	10.0 g	1.00 mL	-	09/14/11
11-19814-091411LCS1	Lab Control	10.0 g	1.00 mL	-	09/14/11
11-19814-091411LCSD1	Lab Control Dup	10.0 g	1.00 mL	-	09/14/11
11-19814-TL91A	NBF-RRSS-A-091211	9.27 g	1.00 mL	D	09/14/11

Basis: D=Dry Weight W=As Received

ANALYTICAL RESOURCES INCORPORATED

ORGANICS ANALYSIS DATA SHEET
TPHG by Method NWTPHG
Matrix: Soil

Data Release Authorized: MW
Reported: 09/21/11

QC Report No: TL91-The Boeing Company
Project: NBF-CTST
Event: 025.082.311.001
Date Sampled: 09/12/11
Date Received: 09/12/11

ARI ID	Client ID	Analysis Date	Basis	Range	Result
MB-092011	Method Blank	09/20/11	Dry	Gasoline	< 5.0 U
11-19814		PID1		HC ID	---
				Trifluorotoluene	99.8%
				Bromobenzene	94.8%
TL91A	NBF-RRSS-A-091211	09/21/11	Dry	Gasoline	< 6.0 U
11-19814		PID1		HC ID	---
				Trifluorotoluene	108%
				Bromobenzene	109%

Gasoline values reported in mg/kg (ppm)

Quantitation on total peaks in the gasoline range from Toluene to Naphthalene.

GAS: Indicates the presence of gasoline or weathered gasoline.
GRO: Positive result that does not match an identifiable gasoline pattern.

Results corrected for soil moisture content per Section 11.10.5 of EPA Method 8000C.

ANALYTICAL RESOURCES INCORPORATED

TPHG SOIL SURROGATE RECOVERY SUMMARY

ARI Job: TL91
Matrix: Soil

QC Report No: TL91-The Boeing Company
Project: NBF-CTST
Event: 025.082.311.001

Client ID	BFB	TFT	BBZ	TOT OUT
MB-092011	NA	99.8%	94.8%	0
LCS-092011	NA	103%	96.7%	0
LCSD-092011	NA	107%	96.3%	0
NBF-RRSS-A-091211	NA	108%	109%	0

	LCS/MB LIMITS	QC LIMITS
(BFB) = Bromofluorobenzene	(70-130)	(70-130)
(TFT) = Trifluorotoluene	(80-120)	(66-123)
(BBZ) = Bromobenzene	(80-120)	(62-130)

Log Number Range: 11-19814 to 11-19814

FORM II TPHG

ANALYTICAL RESOURCES INCORPORATED

ORGANICS ANALYSIS DATA SHEET
TPHG by Method NWTPHG

Sample ID: LCS-092011
LAB CONTROL SAMPLE

Lab Sample ID: LCS-092011
LIMS ID: 11-19814
Matrix: Soil
Data Release Authorized:
Reported: 09/21/11

QC Report No: TL91-The Boeing Company
Project: NBF-CTST
Event: 025.082.311.001
Date Sampled: NA
Date Received: NA

Date Analyzed LCS: 09/20/11 12:38
LCSD: 09/20/11 13:11
Instrument/Analyst LCS: PID1/MH
LCSD: PID1/MH

Purge Volume: 5.0 mL

Sample Amount LCS: 100 mg-dry-wt
LCSD: 100 mg-dry-wt

Analyte	LCS	Spike Added-LCS	LCS Recovery	LCSD	Spike Added-LCSD	LCSD Recovery	RPD
Gasoline Range Hydrocarbons	50.8	50.0	102%	49.0	50.0	98.0%	3.6%

Reported in mg/kg (ppm)

RPD calculated using sample concentrations per SW846.

TPHG Surrogate Recovery

	LCS	LCSD
Trifluorotoluene	103%	107%
Bromobenzene	96.7%	96.3%

ANALYTICAL RESOURCES INCORPORATED

INORGANICS ANALYSIS DATA SHEET
TOTAL METALS

Sample ID: NBF-RRSS-A-091211
SAMPLE

Lab Sample ID: TL91A
LIMS ID: 11-19814
Matrix: Soil
Data Release Authorized:
Reported: 09/21/11

QC Report No: TL91-The Boeing Company
Project: NBF-CTST
025.082.311.001
Date Sampled: 09/12/11
Date Received: 09/12/11

Percent Total Solids: 91.1%

Prep Meth	Prep Date	Analysis Method	Analysis Date	CAS Number	Analyte	RL	mg/kg-dry	Q
3050B	09/15/11	6010B	09/20/11	7440-38-2	Arsenic	5	5	U
3050B	09/15/11	6010B	09/20/11	7440-43-9	Cadmium	0.2	0.2	U
3050B	09/15/11	6010B	09/20/11	**7440-47-3**	**Chromium**	0.5	**11.8**	
3050B	09/15/11	6010B	09/20/11	**7439-92-1**	**Lead**	2	**6**	
CLP	09/15/11	7471A	09/16/11	7439-97-6	Mercury	0.02	0.02	U

U-Analyte undetected at given RL
RL-Reporting Limit

ANALYTICAL RESOURCES INCORPORATED

INORGANICS ANALYSIS DATA SHEET
TOTAL METALS

Sample ID: METHOD BLANK

Lab Sample ID: TL91MB
LIMS ID: 11-19814
Matrix: Soil
Data Release Authorized:
Reported: 09/21/11

QC Report No: TL91-The Boeing Company
Project: NBF-CTST
025.082.311.001
Date Sampled: NA
Date Received: NA

Percent Total Solids: NA

Prep Meth	Prep Date	Analysis Method	Analysis Date	CAS Number	Analyte	RL	mg/kg-dry	Q
3050B	09/15/11	6010B	09/20/11	7440-38-2	Arsenic	5	5	U
3050B	09/15/11	6010B	09/20/11	7440-43-9	Cadmium	0.2	0.2	U
3050B	09/15/11	6010B	09/20/11	7440-47-3	Chromium	0.5	0.5	U
3050B	09/15/11	6010B	09/20/11	7439-92-1	Lead	2	2	U
CLP	09/15/11	7471A	09/16/11	7439-97-6	Mercury	0.02	0.02	U

U-Analyte undetected at given RL
RL-Reporting Limit

ANALYTICAL RESOURCES INCORPORATED

INORGANICS ANALYSIS DATA SHEET
TOTAL METALS

Sample ID: LAB CONTROL

Lab Sample ID: TL91LCS
LIMS ID: 11-19814
Matrix: Soil
Data Release Authorized:
Reported: 09/21/11

QC Report No: TL91-The Boeing Company
Project: NBF-CTST
025.082.311.001
Date Sampled: NA
Date Received: NA

BLANK SPIKE QUALITY CONTROL REPORT

Analyte	Analysis Method	Spike Found	Spike Added	% Recovery	Q
Arsenic	6010B	190	200	95.0%	
Cadmium	6010B	49.6	50.0	99.2%	
Chromium	6010B	50.9	50.0	102%	
Lead	6010B	191	200	95.5%	
Mercury	7471A	0.47	0.50	94.0%	

Reported in mg/kg-dry

N-Control limit not met
NA-Not Applicable, Analyte Not Spiked
Control Limits: 80-120%

Analytical Resources, Incorporated
Analytical Chemists and Consultants

September 21, 2011

Jeremy Davis
Landau Associates, Inc.
130 Second Ave
Edmonds, WA 98020

RE: Project: NBF – DTS 025.082.311.001
ARI Job: TL45

Dear Jeremy:

Please find enclosed the Chain of Custody (COC) record, sample receipt documentation, and analytical results for the above referenced project. Analytical Resources, Inc. (ARI) accepted two soil samples in good condition on September 8, 2011. Two coolers were received with temperatures of 5.4 and 5.3°C.

The sample was analyzed for PCBs, NWTPH-Dx, NWTPH-Gx and Total Metals, as requested on the COC.

There were no irregularities with the samples.

Quality control analysis results are included for your review. Copies of the reports and all associated raw data will be kept on file electronically at ARI. If you have any questions or require additional information, please contact me at your convenience.

Sincerely,
ANALYTICAL RESOURCES, INC

Kelly Bottem
Client Services Manager
(206) 695-6211
kellyb@arilabs.com
www.arilabs.com

cc: Carl Bach, The Boeing Company, P.O. Box 3707, M/S 1W-12, Seattle, WA 98124-2207

4611 South 134th Place, Suite 100 • Tukwila WA 98168 • **206-695-6200** • **206-695-6201** fax

☒ Seattle/Edmonds (425) 778-0907
☐ Tacoma (253) 926-2493
☐ Spokane (509) 327-9737
☐ Portland (503) 542-1080
☐ _____

LANDAU ASSOCIATES

Chain-of-Custody Record

Date 9/8/11
Page 1 of 1

Project Name NBF-DTS
Project No. 025.082.311.001
Project Location/Event NBF-DTS
Sampler's Name Jeremy Davis, Robert Lud
Project Contact Jeremy D. Carl B. Joe K
Send Results To Jeremy D. Carl B. Joe K

Turnaround Time
☒ Standard
☐ Accelerated
☐ _____

Testing Parameters

Sample I.D. SMO	Date	Time	Matrix	No. of Containers	PCBs	NWTPH-Dx	NWTPH-Gx	Metals (MTCA 5) *
NBF-RRSS-A-090811	9/8/11	1340	S	2	x	x	x	x
NBF-RRSS-B-090811	"	1400	"	"	x	x	x	x

Observations/Comments

~~X Allow water samples to settle, collect aliquot from clear portion~~ N4 SMO

~~X NWTPH-Dx run acid wash/silica gel cleanup~~ NOT NEC - SMO

___ run samples standardized to _____ product

___ Analyze for EPH if no specific product identified

VOC/BTEX/VPH (soil):
___ non-preserved
___ preserved w/methanol
___ preserved w/sodium bisulfate
___ Freeze upon receipt

___ Dissolved metal water samples field filtered

Other * Arsenic, Cadmium, Chromium, Lead, Mercury

Special Shipment/Handling or Storage Requirements Cooler with ice

Method of Shipment Drop off @ ARI

Relinquished by	Received by	Relinquished by	Received by
Signature [signature]	Signature [signature]	Signature	Signature
Printed Name JEREMY DAVIS	Printed Name A. Volgardsen	Printed Name	Printed Name
Company LAI	Company ARI	Company	Company
Date 9/8/11 Time 1513	Date 9/8/11 Time 1513	Date Time	Date Time

WHITE COPY - Project File YELLOW COPY - Laboratory PINK COPY - Client Representative

Rev 8/09

Analytical Resources, Incorporated
Analytical Chemists and Consultants

Cooler Receipt Form

ARI Client: Boeing

Project Name: ABF-DTS

COC No(s): _____ (NA)

Delivered by: Fed-Ex UPS Courier Hand Delivered Other: _____

Assigned ARI Job No: TL45

Tracking No: _____ (NA)

Preliminary Examination Phase:

Were intact, properly signed and dated custody seals attached to the outside of to cooler? YES NO

Were custody papers included with the cooler? ..... YES NO

Were custody papers properly filled out (ink, signed, etc.) ..... YES NO

Temperature of Cooler(s) (°C) (recommended 2.0-6.0 °C for chemistry)..... 5.4 5.3 ___ ___

If cooler temperature is out of compliance fill out form 00070F Temp Gun ID#: 90944619

Cooler Accepted by: AV Date: 9/8/11 Time: 1513

Complete custody forms and attach all shipping documents

Log-In Phase:

Was a temperature blank included in the cooler? ..... YES NO

What kind of packing material was used? ... Bubble Wrap Wet Ice Gel Packs Baggies Foam Block Paper Other: _____

Was sufficient ice used (if appropriate)? ..... NA YES NO

Were all bottles sealed in individual plastic bags? ..... YES NO

Did all bottles arrive in good condition (unbroken)? ..... YES NO

Were all bottle labels complete and legible? ..... YES NO

Did the number of containers listed on COC match with the number of containers received? ..... YES NO

Did all bottle labels and tags agree with custody papers? ..... YES NO

Were all bottles used correct for the requested analyses? ..... YES NO

Do any of the analyses (bottles) require preservation? (attach preservation sheet, excluding VOCs)... NA YES NO

Were all VOC vials free of air bubbles? ..... NA YES NO

Was sufficient amount of sample sent in each bottle? ..... YES NO

Date VOC Trip Blank was made at ARI..... NA _____

Was Sample Split by ARI : NA YES Date/Time: _____ Equipment: _____ Split by: _____

Samples Logged by: JM Date: 9/8/11 Time: 1533

***** Notify Project Manager of discrepancies or concerns *****

Sample ID on Bottle	Sample ID on COC	Sample ID on Bottle	Sample ID on COC

Additional Notes, Discrepancies, & Resolutions:

By: Date:

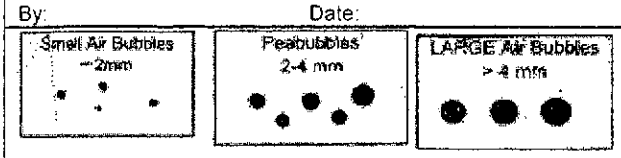

Small → "sm"
Peabubbles → "pb"
Large → "lg"
Headspace → "hs"

Sample ID Cross Reference Report

ANALYTICAL RESOURCES INCORPORATED

ARI Job No: TL45
Client: The Boeing Company
Project Event: 025.082.311.001
Project Name: NBF-DTS

	Sample ID	ARI Lab ID	ARI LIMS ID	Matrix	Sample Date/Time	VTSR
1.	NBF-RRSS-A-090811	TL45A	11-19558	Soil	09/08/11 13:40	09/08/11 15:13
2.	NBF-RRSS-B-090811	TL45B	11-19559	Soil	09/08/11 14:00	09/08/11 15:13

Printed 09/08/11

ANALYTICAL RESOURCES INCORPORATED

ORGANICS ANALYSIS DATA SHEET
PCB by GC/ECD Method SW8082

Sample ID: NBF-RRSS-A-090811
SAMPLE

Lab Sample ID: TL45A
LIMS ID: 11-19558
Matrix: Soil
Data Release Authorized: MW
Reported: 09/21/11

QC Report No: TL45-The Boeing Company
Project: NBF-DTS
025.082.311.001
Date Sampled: 09/08/11
Date Received: 09/08/11

Date Extracted: 09/09/11
Date Analyzed: 09/20/11 02:23
Instrument/Analyst: ECD7/AAR
GPC Cleanup: No
Sulfur Cleanup: Yes
Acid Cleanup: Yes
Florisil Cleanup: No

Sample Amount: 13.1 g-dry-wt
Final Extract Volume: 4.00 mL
Dilution Factor: 1.00
Silica Gel: No

Percent Moisture: 8.2%

CAS Number	Analyte	RL	Result
12674-11-2	Aroclor 1016	31	< 31 U
53469-21-9	Aroclor 1242	31	< 31 U
12672-29-6	Aroclor 1248	31	< 31 U
11097-69-1	Aroclor 1254	31	< 31 U
11096-82-5	Aroclor 1260	31	< 31 U
11104-28-2	Aroclor 1221	31	< 31 U
11141-16-5	Aroclor 1232	31	< 31 U
37324-23-5	Aroclor 1262	31	< 31 U

Reported in µg/kg (ppb)

PCB Surrogate Recovery

Decachlorobiphenyl	76.8%
Tetrachlorometaxylene	76.5%

ANALYTICAL RESOURCES INCORPORATED

ORGANICS ANALYSIS DATA SHEET
PCB by GC/ECD Method SW8082

Sample ID: NBF-RRSS-B-090811
SAMPLE

Lab Sample ID: TL45B
LIMS ID: 11-19559
Matrix: Soil
Data Release Authorized: MW
Reported: 09/21/11

QC Report No: TL45-The Boeing Company
Project: NBF-DTS
025.082.311.001
Date Sampled: 09/08/11
Date Received: 09/08/11

Date Extracted: 09/09/11
Date Analyzed: 09/20/11 02:46
Instrument/Analyst: ECD7/AAR
GPC Cleanup: No
Sulfur Cleanup: Yes
Acid Cleanup: Yes
Florisil Cleanup: No

Sample Amount: 12.6 g-dry-wt
Final Extract Volume: 4.00 mL
Dilution Factor: 1.00
Silica Gel: No

Percent Moisture: 6.9%

CAS Number	Analyte	RL	Result
12674-11-2	Aroclor 1016	32	< 32 U
53469-21-9	Aroclor 1242	32	< 32 U
12672-29-6	Aroclor 1248	32	< 32 U
11097-69-1	**Aroclor 1254**	**32**	**100**
11096-82-5	**Aroclor 1260**	**32**	**56**
11104-28-2	Aroclor 1221	32	< 32 U
11141-16-5	Aroclor 1232	32	< 32 U
37324-23-5	Aroclor 1262	32	< 32 U

Reported in µg/kg (ppb)

PCB Surrogate Recovery

Decachlorobiphenyl	76.2%
Tetrachlorometaxylene	74.8%

ANALYTICAL RESOURCES INCORPORATED

ORGANICS ANALYSIS DATA SHEET
PCB by GC/ECD Method SW8082

Sample ID: MB-090911
METHOD BLANK

Lab Sample ID: MB-090911
LIMS ID: 11-19558
Matrix: Soil
Data Release Authorized:
Reported: 09/21/11

QC Report No: TL45-The Boeing Company
Project: NBF-DTS
025.082.311.001
Date Sampled: NA
Date Received: NA

Date Extracted: 09/09/11
Date Analyzed: 09/20/11 00:51
Instrument/Analyst: ECD7/AAR
GPC Cleanup: No
Sulfur Cleanup: Yes
Acid Cleanup: Yes
Florisil Cleanup: No

Sample Amount: 12.0 g
Final Extract Volume: 4.00 mL
Dilution Factor: 1.00
Silica Gel: No

Percent Moisture: NA

CAS Number	Analyte	RL	Result
12674-11-2	Aroclor 1016	33	< 33 U
53469-21-9	Aroclor 1242	33	< 33 U
12672-29-6	Aroclor 1248	33	< 33 U
11097-69-1	Aroclor 1254	33	< 33 U
11096-82-5	Aroclor 1260	33	< 33 U
11104-28-2	Aroclor 1221	33	< 33 U
11141-16-5	Aroclor 1232	33	< 33 U
37324-23-5	Aroclor 1262	33	< 33 U

Reported in µg/kg (ppb)

PCB Surrogate Recovery

Decachlorobiphenyl	83.0%
Tetrachlorometaxylene	75.0%

ANALYTICAL RESOURCES INCORPORATED

SW8082/PCB SOIL/SEDIMENT SURROGATE RECOVERY SUMMARY

Matrix: Soil

QC Report No: TL45-The Boeing Company
Project: NBF-DTS
025.082.311.001

Client ID	DCBP % REC	DCBP LCL-UCL	TCMX % REC	TCMX LCL-UCL	TOT OUT
MB-090911	83.0%	51-112	75.0%	46-111	0
LCS-090911	83.0%	51-112	72.0%	46-111	0
LCSD-090911	80.5%	51-112	73.2%	46-111	0
NBF-RRSS-A-090811	76.8%	42-127	76.5%	50-114	0
NBF-RRSS-B-090811	76.2%	42-127	74.8%	50-114	0

Microwave (MARS) Control Limits PCBSMI
Prep Method: SW3546
Log Number Range: 11-19558 to 11-19559

FORM-II SW8082

ANALYTICAL RESOURCES INCORPORATED

ORGANICS ANALYSIS DATA SHEET
PCB by GC/ECD Method SW8082

Sample ID: LCS-090911
LCS/LCSD

Lab Sample ID: LCS-090911
LIMS ID: 11-19558
Matrix: Soil
Data Release Authorized: MW
Reported: 09/21/11

QC Report No: TL45-The Boeing Company
Project: NBF-DTS
025.082.311.001
Date Sampled: NA
Date Received: NA

Date Extracted LCS/LCSD: 09/09/11

Date Analyzed LCS: 09/20/11 01:14
LCSD: 09/20/11 01:37
Instrument/Analyst LCS: ECD7/AAR
LCSD: ECD7/AAR
GPC Cleanup: No
Sulfur Cleanup: Yes
Acid Cleanup: Yes
Florisil Cleanup: No

Sample Amount LCS: 12.0 g-dry-wt
LCSD: 12.0 g-dry-wt
Final Extract Volume LCS: 4.00 mL
LCSD: 4.00 mL
Dilution Factor LCS: 1.00
LCSD: 1.00
Silica Gel: No

Percent Moisture: NA

Analyte	LCS	Spike Added-LCS	LCS Recovery	LCSD	Spike Added-LCSD	LCSD Recovery	RPD
Aroclor 1016	121	167	72.5%	123	167	73.7%	1.6%
Aroclor 1260	136	167	81.4%	136	167	81.4%	0.0%

PCB Surrogate Recovery

	LCS	LCSD
Decachlorobiphenyl	83.0%	80.5%
Tetrachlorometaxylene	72.0%	73.2%

Results reported in µg/kg (ppb)
RPD calculated using sample concentrations per SW846.

ANALYTICAL RESOURCES INCORPORATED

ORGANICS ANALYSIS DATA SHEET
TPHG by Method NWTPHG
Matrix: Soil

Data Release Authorized: MW
Reported: 09/16/11

QC Report No: TL45-The Boeing Company
Project: NBF-DTS
Event: 025.082.311.001
Date Sampled: 09/08/11
Date Received: 09/08/11

ARI ID	Client ID	Analysis Date	Basis	Range	Result
MB-091311	Method Blank	09/13/11	Dry	Gasoline	< 5.0 U
11-19558		PID3		HC ID	---
				Trifluorotoluene	99.8%
				Bromobenzene	96.0%
TL45A	NBF-RRSS-A-090811	09/13/11	Dry	Gasoline	< 6.2 U
11-19558		PID3		HC ID	---
				Trifluorotoluene	78.7%
				Bromobenzene	75.4%
MB-091411	Method Blank	09/14/11	Dry	Gasoline	< 5.0 U
11-19559		PID3		HC ID	---
				Trifluorotoluene	95.9%
				Bromobenzene	91.9%
TL45B	NBF-RRSS-B-090811	09/14/11	Dry	Gasoline	< 5.9 U
11-19559		PID3		HC ID	---
				Trifluorotoluene	105%
				Bromobenzene	98.2%

Gasoline values reported in mg/kg (ppm)

Quantitation on total peaks in the gasoline range from Toluene to Naphthalene.

GAS: Indicates the presence of gasoline or weathered gasoline.
GRO: Positive result that does not match an identifiable gasoline pattern.

Results corrected for soil moisture content per Section 11.10.5 of EPA Method 8000C.

ANALYTICAL RESOURCES INCORPORATED

TPHG SOIL SURROGATE RECOVERY SUMMARY

ARI Job: TL45
Matrix: Soil

QC Report No: TL45-The Boeing Company
Project: NBF-DTS
Event: 025.082.311.001

Client ID	BFB	TFT	BBZ	TOT OUT
MB-091311	NA	99.8%	96.0%	0
LCS-091311	NA	103%	97.0%	0
LCSD-091311	NA	104%	101%	0
NBF-RRSS-A-090811	NA	78.7%	75.4%	0
MB-091411	NA	95.9%	91.9%	0
LCS-091411	NA	100%	95.4%	0
LCSD-091411	NA	101%	105%	0
NBF-RRSS-B-090811	NA	105%	98.2%	0

	LCS/MB LIMITS	QC LIMITS
(BFB) = Bromofluorobenzene	(70-130)	(70-130)
(TFT) = Trifluorotoluene	(80-120)	(66-123)
(BBZ) = Bromobenzene	(80-120)	(62-130)

Log Number Range: 11-19558 to 11-19559

FORM II TPHG

ANALYTICAL RESOURCES INCORPORATED

ORGANICS ANALYSIS DATA SHEET
TPHG by Method NWTPHG

Sample ID: LCS-091311
LAB CONTROL SAMPLE

Lab Sample ID: LCS-091311
LIMS ID: 11-19558
Matrix: Soil
Data Release Authorized:
Reported: 09/16/11

QC Report No: TL45-The Boeing Company
Project: NBF-DTS
Event: 025.082.311.001
Date Sampled: NA
Date Received: NA

Date Analyzed LCS: 09/13/11 07:21
LCSD: 09/13/11 07:47
Instrument/Analyst LCS: PID3/MH
LCSD: PID3/MH

Purge Volume: 5.0 mL

Sample Amount LCS: 100 mg-dry-wt
LCSD: 100 mg-dry-wt

Analyte	LCS	Spike Added-LCS	LCS Recovery	LCSD	Spike Added-LCSD	LCSD Recovery	RPD
Gasoline Range Hydrocarbons	53.6	50.0	107%	50.3	50.0	101%	6.4%

Reported in mg/kg (ppm)

RPD calculated using sample concentrations per SW846.

TPHG Surrogate Recovery

	LCS	LCSD
Trifluorotoluene	103%	104%
Bromobenzene	97.0%	101%

ANALYTICAL RESOURCES INCORPORATED

ORGANICS ANALYSIS DATA SHEET
TPHG by Method NWTPHG

Sample ID: LCS-091411
LAB CONTROL SAMPLE

Lab Sample ID: LCS-091411
LIMS ID: 11-19559
Matrix: Soil
Data Release Authorized:
Reported: 09/16/11

QC Report No: TL45-The Boeing Company
Project: NBF-DTS
Event: 025.082.311.001
Date Sampled: NA
Date Received: NA

Date Analyzed LCS: 09/14/11 06:50
LCSD: 09/14/11 07:17
Instrument/Analyst LCS: PID3/MH
LCSD: PID3/MH

Purge Volume: 5.0 mL

Sample Amount LCS: 100 mg-dry-wt
LCSD: 100 mg-dry-wt

Analyte	LCS	Spike Added-LCS	LCS Recovery	LCSD	Spike Added-LCSD	LCSD Recovery	RPD
Gasoline Range Hydrocarbons	52.0	50.0	104%	46.6	50.0	93.2%	11.0%

Reported in mg/kg (ppm)

RPD calculated using sample concentrations per SW846.

TPHG Surrogate Recovery

	LCS	LCSD
Trifluorotoluene	100%	101%
Bromobenzene	95.4%	105%

ANALYTICAL RESOURCES INCORPORATED

ORGANICS ANALYSIS DATA SHEET
TOTAL DIESEL RANGE HYDROCARBONS
NWTPHD by GC/FID
Page 1 of 1
Matrix: Soil

QC Report No: TL45-The Boeing Company
Project: NBF-DTS
025.082.311.001
Date Received: 09/08/11

Data Release Authorized:
Reported: 09/12/11

ARI ID	Sample ID	Extraction Date	Analysis Date	EFV DL	Range	RL	Result
MB-090911	Method Blank	09/09/11	09/10/11	1.00	Diesel	5.0	< 5.0 U
11-19558	HC ID: ---		FID4A	1.0	Motor Oil	5.0	< 5.0 U
					o-Terphenyl		89.0%
TL45A	NBF-RRSS-A-090811	09/09/11	09/10/11	1.00	**Diesel**	**5.4**	**24**
11-19558	HC ID: **DRO/MOTOR OIL**		FID4A	1.0	**Motor Oil**	**11**	**56**
					o-Terphenyl		79.2%
TL45B	NBF-RRSS-B-090811	09/09/11	09/10/11	1.00	**Diesel**	**26**	**33**
11-19559	HC ID: **DRO/MOTOR OIL**		FID4A	5.0	**Motor Oil**	**53**	**160**
					o-Terphenyl		86.0%

Reported in mg/kg (ppm)

EFV-Effective Final Volume in mL.
DL-Dilution of extract prior to analysis.
RL-Reporting limit.

Diesel quantitation on total peaks in the range from C12 to C24.
Motor Oil quantitation on total peaks in the range from C24 to C38.
HC ID: DRO/RRO indicates results of organics or additional hydrocarbons in ranges are not identifiable.

ANALYTICAL RESOURCES INCORPORATED

TPHD SURROGATE RECOVERY SUMMARY

Matrix: Soil

QC Report No: TL45-The Boeing Company
Project: NBF-DTS
025.082.311.001

Client ID	OTER	TOT OUT
090911MBS	89.0%	0
090911LCS	80.8%	0
090911LCSD	86.9%	0
NBF-RRSS-A-090811	79.2%	0
NBF-RRSS-B-090811	86.0%	0

	LCS/MB LIMITS	QC LIMITS
(OTER) = o-Terphenyl	(50-150)	(50-150)

Prep Method: SW3546
Log Number Range: 11-19558 to 11-19559

FORM-II TPHD

ANALYTICAL RESOURCES INCORPORATED

ORGANICS ANALYSIS DATA SHEET
NWTPHD by GC/FID

Sample ID: LCS-090911
LCS/LCSD

Lab Sample ID: LCS-090911
LIMS ID: 11-19558
Matrix: Soil
Data Release Authorized:
Reported: 09/12/11

QC Report No: TL45-The Boeing Company
Project: NBF-DTS
025.082.311.001
Date Sampled: NA
Date Received: NA

Date Extracted LCS/LCSD: 09/09/11

Date Analyzed LCS: 09/10/11 06:32
LCSD: 09/10/11 06:55
Instrument/Analyst LCS: FID4A/AAR
LCSD: FID4A/AAR

Sample Amount LCS: 10.0 g-dry-wt
LCSD: 10.0 g-dry-wt
Final Extract Volume LCS: 1.0 mL
LCSD: 1.0 mL
Dilution Factor LCS: 1.00
LCSD: 1.00

Range	LCS	Spike Added-LCS	LCS Recovery	LCSD	Spike Added-LCSD	LCSD Recovery	RPD
Diesel	144	150	96.0%	142	150	94.7%	1.4%

TPHD Surrogate Recovery

	LCS	LCSD
o-Terphenyl	80.8%	86.9%

Results reported in mg/kg
RPD calculated using sample concentrations per SW846.

ANALYTICAL RESOURCES INCORPORATED

TOTAL DIESEL RANGE HYDROCARBONS-EXTRACTION REPORT

ARI Job: TL45
Matrix: Soil
Project: NBF-DTS
Date Received: 09/08/11
025.082.311.001

ARI ID	Client ID	Client Amt	Final Vol	Basis	Prep Date
11-19558-090911MB1	Method Blank	10.0 g	1.00 mL	-	09/09/11
11-19558-090911LCS1	Lab Control	10.0 g	1.00 mL	-	09/09/11
11-19558-090911LCSD1	Lab Control Dup	10.0 g	1.00 mL	-	09/09/11
11-19558-TL45A	NBF-RRSS-A-090811	9.29 g	1.00 mL	D	09/09/11
11-19559-TL45B	NBF-RRSS-B-090811	9.48 g	1.00 mL	D	09/09/11

Basis: D=Dry Weight W=As Received

ANALYTICAL RESOURCES INCORPORATED

INORGANICS ANALYSIS DATA SHEET
TOTAL METALS

Sample ID: NBF-RRSS-A-090811
SAMPLE

Lab Sample ID: TL45A
LIMS ID: 11-19558
Matrix: Soil
Data Release Authorized:
Reported: 09/14/11

QC Report No: TL45-The Boeing Company
Project: NBF-DTS
025.082.311.001
Date Sampled: 09/08/11
Date Received: 09/08/11

Percent Total Solids: 90.9%

Prep Meth	Prep Date	Analysis Method	Analysis Date	CAS Number	Analyte	RL	mg/kg-dry	Q
3050B	09/09/11	6010B	09/14/11	7440-38-2	Arsenic	5	5	U
3050B	09/09/11	6010B	09/14/11	7440-43-9	Cadmium	0.2	0.2	U
3050B	09/09/11	6010B	09/14/11	**7440-47-3**	**Chromium**	0.5	**11.7**	
3050B	09/09/11	6010B	09/14/11	**7439-92-1**	**Lead**	2	**11**	
CLP	09/09/11	7471A	09/12/11	**7439-97-6**	**Mercury**	0.03	**0.04**	

U-Analyte undetected at given RL
RL-Reporting Limit

ANALYTICAL RESOURCES INCORPORATED

INORGANICS ANALYSIS DATA SHEET
TOTAL METALS

Sample ID: NBF-RRSS-B-090811
SAMPLE

Lab Sample ID: TL45B
LIMS ID: 11-19559
Matrix: Soil
Data Release Authorized:
Reported: 09/14/11

QC Report No: TL45-The Boeing Company
Project: NBF-DTS
025.082.311.001
Date Sampled: 09/08/11
Date Received: 09/08/11

Percent Total Solids: 92.5%

Prep Meth	Prep Date	Analysis Method	Analysis Date	CAS Number	Analyte	RL	mg/kg-dry	Q
3050B	09/09/11	6010B	09/14/11	7440-38-2	Arsenic	5	5	U
3050B	09/09/11	6010B	09/14/11	7440-43-9	Cadmium	0.2	0.2	U
3050B	09/09/11	6010B	09/14/11	**7440-47-3**	**Chromium**	0.5	**17.1**	
3050B	09/09/11	6010B	09/14/11	**7439-92-1**	**Lead**	2	**31**	
CLP	09/09/11	7471A	09/12/11	**7439-97-6**	**Mercury**	0.02	**0.13**	

U-Analyte undetected at given RL
RL-Reporting Limit

ANALYTICAL RESOURCES INCORPORATED

INORGANICS ANALYSIS DATA SHEET
TOTAL METALS

Sample ID: METHOD BLANK

Lab Sample ID: TL45MB
LIMS ID: 11-19558
Matrix: Soil
Data Release Authorized:
Reported: 09/14/11

QC Report No: TL45-The Boeing Company
Project: NBF-DTS
025.082.311.001
Date Sampled: NA
Date Received: NA

Percent Total Solids: NA

Prep Meth	Prep Date	Analysis Method	Analysis Date	CAS Number	Analyte	RL	mg/kg-dry	Q
3050B	09/09/11	6010B	09/14/11	7440-38-2	Arsenic	5	5	U
3050B	09/09/11	6010B	09/14/11	7440-43-9	Cadmium	0.2	0.2	U
3050B	09/09/11	6010B	09/14/11	7440-47-3	Chromium	0.5	0.5	U
3050B	09/09/11	6010B	09/14/11	7439-92-1	Lead	2	2	U
CLP	09/09/11	7471A	09/12/11	7439-97-6	Mercury	0.02	0.02	U

U-Analyte undetected at given RL
RL-Reporting Limit

ANALYTICAL RESOURCES INCORPORATED

INORGANICS ANALYSIS DATA SHEET
TOTAL METALS

Sample ID: LAB CONTROL

Lab Sample ID: TL45LCS
LIMS ID: 11-19558
Matrix: Soil
Data Release Authorized:
Reported: 09/14/11

QC Report No: TL45-The Boeing Company
Project: NBF-DTS
025.082.311.001
Date Sampled: NA
Date Received: NA

BLANK SPIKE QUALITY CONTROL REPORT

Analyte	Analysis Method	Spike Found	Spike Added	% Recovery	Q
Arsenic	6010B	197	200	98.5%	
Cadmium	6010B	48.9	50.0	97.8%	
Chromium	6010B	48.7	50.0	97.4%	
Lead	6010B	192	200	96.0%	
Mercury	7471A	0.50	0.50	100%	

Reported in mg/kg-dry

N-Control limit not met
NA-Not Applicable, Analyte Not Spiked
Control Limits: 80-120%

Analytical Resources, Incorporated
Analytical Chemists and Consultants

October 10, 2011

Jeremy Davis
Landau Associates, Inc.
130 Second Ave
Edmonds, WA 98020

RE: Project: NBF – RRSS 025.082.311.001
ARI Job: TN81

Dear Jeremy:

Please find enclosed the Chain of Custody (COC) record, sample receipt documentation, and analytical results for the above referenced project. Analytical Resources, Inc. (ARI) accepted one soil sample in good condition on September 23, 2011. One cooler was received with a temperature of 8.3°C.

The sample was analyzed for PCBs, NWTPH-Dx, NWTPH-Gx and Total Metals, as requested on the COC.

There were no irregularities with the samples.

Quality control analysis results are included for your review. Copies of the reports and all associated raw data will be kept on file electronically at ARI. If you have any questions or require additional information, please contact me at your convenience.

Sincerely,
ANALYTICAL RESOURCES, INC

Kelly Bottem
Client Services Manager
(206) 695-6211
kellyb@arilabs.com
www.arilabs.com

cc: Carl Bach, The Boeing Company, P.O. Box 3707, M/S 1W-12, Seattle, WA 98124-2207

4611 South 134th Place, Suite 100 • Tukwila WA 98168 • **206-695-6200** • **206-695-6201** fax

LANDAU ASSOCIATES

☒ Seattle/Edmonds (425) 778-0907
☐ Tacoma (253) 926-2493
☐ Spokane (509) 327-9737
☐ Portland (503) 542-1080
☐

Chain-of-Custody Record

JN81

Date 9/23/11
Page 1 of 1

Project Name NBF-RRSS
Project No. 025-082.311.001
Project Location/Event NBF Soil Stockpiles -RRSS
Sampler's Name JMD Jeremy Davis
Project Contact Jeremy D, Carl B. Joe K
Send Results To Jeremy D, Carl B. Joe K

Turnaround Time
☒ Standard
☐ Accelerated
☐

Testing Parameters

Sample I.D.	Date	Time	Matrix	No. of Containers	PCBs	Metals *	NWTPH-Gx	NWTPH-Dx
NBF-RRSS-A-092311	9/23/11	1015	S	2	X	X	X	X

Observations/Comments

X Allow water ~~samples to settle, collect aliquot from clear portion~~ NA - JMD

X ~~NWTPH-Dx - run acid wash/silica gel cleanup~~ Not Nec. JMD

___ run samples standardized to _____ product

___ Analyze for EPH if no specific product identified

VOC/BTEX/VPH (soil):
___ non-preserved
___ preserved w/methanol
___ preserved w/sodium bisulfate
___ Freeze upon receipt

___ Dissolved metal water samples field filtered

Other * MTCA-5
Arsenic, Cadmium, Chromium, lead, mercury

Special Shipment/Handling or Storage Requirements Cool w/ wet ice

Method of Shipment Drop off @ ARI

Relinquished by	Received by	Relinquished by	Received by
Signature	Signature A. Volgardsen	Signature	Signature
Printed Name Jeremy Davis	Printed Name ARI	Printed Name	Printed Name
Company CAI	Company	Company	Company
Date 9/23/11 Time 1240	Date 9/23/11 Time 1240	Date Time	Date Time

WHITE COPY - Project File YELLOW COPY - Laboratory PINK COPY - Client Representative

Rev 8/09

Analytical Resources, Incorporated
Analytical Chemists and Consultants

Cooler Receipt Form

ARI Client: Boeing

Project Name: NBF Soil Stockpiles - RRSS

COC No(s): _____ (NA)

Delivered by: Fed-Ex UPS Courier Hand Delivered Other: _____

Assigned ARI Job No: TN 81

Tracking No: _____ (NA)

Preliminary Examination Phase:

Were intact, properly signed and dated custody seals attached to the outside of to cooler?	(YES)	NO
Were custody papers included with the cooler?	(YES)	NO
Were custody papers properly filled out (ink, signed, etc.)	(YES)	NO

Temperature of Cooler(s) (°C) (recommended 2.0-6.0 °C for chemistry)..... 8.3 ____ ____ ____ ____

If cooler temperature is out of compliance fill out form 00070F

Temp Gun ID#: 9094116 19

Cooler Accepted by: AV Date: 9/23/11 Time: 1240

Complete custody forms and attach all shipping documents

Log-In Phase:

Was a temperature blank included in the cooler?		YES	(NO)
What kind of packing material was used? ... Bubble Wrap (Wet Ice) Gel Packs (Baggies) Foam Block Paper Other: _____			
Was sufficient ice used (if appropriate)?	NA	(YES)	NO
Were all bottles sealed in individual plastic bags?		(YES)	NO
Did all bottles arrive in good condition (unbroken)?		(YES)	NO
Were all bottle labels complete and legible?		(YES)	NO
Did the number of containers listed on COC match with the number of containers received?		(YES)	NO
Did all bottle labels and tags agree with custody papers?		(YES)	NO
Were all bottles used correct for the requested analyses?		(YES)	NO
Do any of the analyses (bottles) require preservation? (attach preservation sheet, excluding VOCs)...	(NA)	YES	NO
Were all VOC vials free of air bubbles?	(NA)	YES	NO
Was sufficient amount of sample sent in each bottle?		(YES)	NO
Date VOC Trip Blank was made at ARI	(NA)	_____	

Was Sample Split by ARI : (NA) YES Date/Time: _____ Equipment: _____ Split by: _____

Samples Logged by: PS Date: 9-23-11 Time: 1310

***** Notify Project Manager of discrepancies or concerns *****

Sample ID on Bottle	Sample ID on COC	Sample ID on Bottle	Sample ID on COC

Additional Notes, Discrepancies, & Resolutions:

By: Date:

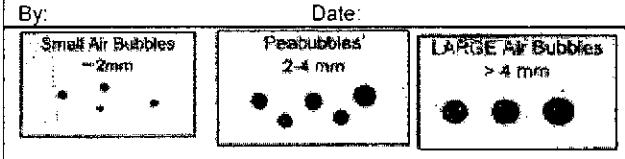

Small → "sm"	
Peabubbles → "pb"	
Large → "lg"	
Headspace → "hs"	

Analytical Resources, Incorporated
Analytical Chemists and Consultants

Cooler Temperature Compliance Form

Cooler#: 1 Temperature(°C): 8.3

Sample ID	Bottle Count	Bottle Type
All samples out of temp compliance		

Cooler#: _____ Temperature(°C): _____

Sample ID	Bottle Count	Bottle Type

Cooler#: _____ Temperature(°C): _____

Sample ID	Bottle Count	Bottle Type

Cooler#: _____ Temperature(°C): _____

Sample ID	Bottle Count	Bottle Type

Completed by: TS Date: 9-23-11 Time: 1310

Sample ID Cross Reference Report

ANALYTICAL RESOURCES INCORPORATED

ARI Job No: TN81
Client: The Boeing Company
Project Event: 025.082.311.001
Project Name: NBF Soil Stockpiles -RRSS

	Sample ID	ARI Lab ID	ARI LIMS ID	Matrix	Sample Date/Time	VTSR
1.	NBF-RRSS-A-092311	TN81A	11-20907	Soil	09/23/11 10:15	09/23/11 12:40

Printed 09/23/11

ANALYTICAL RESOURCES INCORPORATED

ORGANICS ANALYSIS DATA SHEET
TPHG by Method NWTPHG
Matrix: Soil

Data Release Authorized: VB
Reported: 10/08/11

QC Report No: TN81-The Boeing Company
Project: NBF Soil Stockpiles -RRSS
Event: 025.082.311.001
Date Sampled: 09/23/11
Date Received: 09/23/11

ARI ID	Client ID	Analysis Date	Basis	Range	Result
MB-100411	Method Blank	10/04/11	Dry	Gasoline	< 0.25 U
11-20907		PID2		HC ID	---
				Trifluorotoluene	97.5%
				Bromobenzene	95.3%
TN81A	NBF-RRSS-A-092311	10/04/11	Dry	Gasoline	< 6.2 U
11-20907		PID2		HC ID	---
				Trifluorotoluene	102%
				Bromobenzene	99.2%

Gasoline values reported in mg/kg (ppm)

Quantitation on total peaks in the gasoline range from Toluene to Naphthalene.

GAS: Indicates the presence of gasoline or weathered gasoline.
GRO: Positive result that does not match an identifiable gasoline pattern.

Results corrected for soil moisture content per Section 11.10.5 of EPA Method 8000C.

ANALYTICAL RESOURCES INCORPORATED

TPHG SOIL SURROGATE RECOVERY SUMMARY

ARI Job: TN81
Matrix: Soil

QC Report No: TN81-The Boeing Company
Project: NBF Soil Stockpiles -RRSS
Event: 025.082.311.001

Client ID	BFB	TFT	BBZ	TOT OUT
MB-100411	NA	97.5%	95.3%	0
LCS-100411	NA	96.8%	93.5%	0
LCSD-100411	NA	99.2%	96.2%	0
NBF-RRSS-A-092311	NA	102%	99.2%	0

	LCS/MB LIMITS	QC LIMITS
(BFB) = Bromofluorobenzene	(70-130)	(70-130)
(TFT) = Trifluorotoluene	(80-120)	(66-123)
(BBZ) = Bromobenzene	(80-120)	(62-130)

Log Number Range: 11-20907 to 11-20907

FORM II TPHG

ANALYTICAL RESOURCES INCORPORATED

ORGANICS ANALYSIS DATA SHEET
TPHG by Method NWTPHG

Sample ID: LCS-100411
LAB CONTROL SAMPLE

Lab Sample ID: LCS-100411
LIMS ID: 11-20907
Matrix: Soil
Data Release Authorized: VD
Reported: 10/08/11

QC Report No: TN81-The Boeing Company
Project: NBF Soil Stockpiles -RRSS
Event: 025.082.311.001
Date Sampled: NA
Date Received: NA

Date Analyzed LCS: 10/04/11 07:50
LCSD: 10/04/11 08:18
Instrument/Analyst LCS: PID2/MH
LCSD: PID2/MH

Purge Volume: 5.0 mL

Sample Amount LCS: 100 mg-dry-wt
LCSD: 100 mg-dry-wt

Analyte	LCS	Spike Added-LCS	LCS Recovery	LCSD	Spike Added-LCSD	LCSD Recovery	RPD
Gasoline Range Hydrocarbons	45.6	50.0	91.2%	46.2	50.0	92.4%	1.3%

Reported in mg/kg (ppm)

RPD calculated using sample concentrations per SW846.

TPHG Surrogate Recovery

	LCS	LCSD
Trifluorotoluene	96.8%	99.2%
Bromobenzene	93.5%	96.2%

ANALYTICAL RESOURCES INCORPORATED

ORGANICS ANALYSIS DATA SHEET
TOTAL DIESEL RANGE HYDROCARBONS
NWTPHD by GC/FID
Page 1 of 1
Matrix: Soil

QC Report No: TN81-The Boeing Company
Project: NBF Soil Stockpiles -RRSS
025.082.311.001
Date Received: 09/23/11

Data Release Authorized:
Reported: 09/26/11

ARI ID	Sample ID	Extraction Date	Analysis Date	EFV DL	Range	RL	Result
MB-092311	Method Blank	09/23/11	09/24/11	1.00	Diesel	5.0	< 5.0 U
11-20907	HC ID: ---		FID4A	1.0	Motor Oil	10	< 10 U
					o-Terphenyl		92.0%
TN81A	NBF-RRSS-A-092311	09/23/11	09/24/11	1.00	**Diesel**	**5.4**	**11**
11-20907	HC ID: **DRO/MOTOR OIL**		FID4A	1.0	**Motor Oil**	**11**	**24**
					o-Terphenyl		82.2%

Reported in mg/kg (ppm)

EFV-Effective Final Volume in mL.
DL-Dilution of extract prior to analysis.
RL-Reporting limit.

Diesel quantitation on total peaks in the range from C12 to C24.
Motor Oil quantitation on total peaks in the range from C24 to C38.
HC ID: DRO/RRO indicates results of organics or additional hydrocarbons in ranges are not identifiable.

ANALYTICAL RESOURCES INCORPORATED

TPHD SURROGATE RECOVERY SUMMARY

Matrix: Soil

QC Report No: TN81-The Boeing Company
Project: NBF Soil Stockpiles -RRSS
025.082.311.001

Client ID	OTER	TOT OUT
092311MBS	92.0%	0
092311LCS	95.8%	0
092311LCSD	96.5%	0
NBF-RRSS-A-092311	82.2%	0

	LCS/MB LIMITS	QC LIMITS
(OTER) = o-Terphenyl	(50-150)	(50-150)

Prep Method: SW3546
Log Number Range: 11-20907 to 11-20907

FORM-II TPHD

ANALYTICAL RESOURCES INCORPORATED

ORGANICS ANALYSIS DATA SHEET
NWTPHD by GC/FID

Sample ID: LCS-092311
LCS/LCSD

Lab Sample ID: LCS-092311
LIMS ID: 11-20907
Matrix: Soil
Data Release Authorized:
Reported: 09/26/11

QC Report No: TN81-The Boeing Company
Project: NBF Soil Stockpiles -RRSS
025.082.311.001
Date Sampled: NA
Date Received: NA

Date Extracted LCS/LCSD: 09/23/11

Date Analyzed LCS: 09/24/11 20:04
LCSD: 09/24/11 20:28
Instrument/Analyst LCS: FID4A/AAR
LCSD: FID4A/AAR

Sample Amount LCS: 10.0 g-dry-wt
LCSD: 10.0 g-dry-wt
Final Extract Volume LCS: 1.0 mL
LCSD: 1.0 mL
Dilution Factor LCS: 1.00
LCSD: 1.00

Range	LCS	Spike Added-LCS	LCS Recovery	LCSD	Spike Added-LCSD	LCSD Recovery	RPD
Diesel	143	150	95.3%	144	150	96.0%	0.7%

TPHD Surrogate Recovery

	LCS	LCSD
o-Terphenyl	95.8%	96.5%

Results reported in mg/kg
RPD calculated using sample concentrations per SW846.

ANALYTICAL RESOURCES INCORPORATED

TOTAL DIESEL RANGE HYDROCARBONS-EXTRACTION REPORT

ARI Job: TN81
Project: NBF Soil Stockpiles -RRSS
025.082.311.001

Matrix: Soil
Date Received: 09/23/11

ARI ID	Client ID	Client Amt	Final Vol	Basis	Prep Date
11-20907-092311MB1	Method Blank	10.0 g	1.00 mL	-	09/23/11
11-20907-092311LCS1	Lab Control	10.0 g	1.00 mL	-	09/23/11
11-20907-092311LCSD1	Lab Control Dup	10.0 g	1.00 mL	-	09/23/11
11-20907-TN81A	NBF-RRSS-A-092311	9.23 g	1.00 mL	D	09/23/11

Basis: D=Dry Weight W=As Received

ANALYTICAL RESOURCES INCORPORATED

ORGANICS ANALYSIS DATA SHEET
PCB by GC/ECD Method SW8082

Sample ID: NBF-RRSS-A-092311
SAMPLE

Lab Sample ID: TN81A
LIMS ID: 11-20907
Matrix: Soil
Data Release Authorized: VB
Reported: 09/30/11

QC Report No: TN81-The Boeing Company
Project: NBF Soil Stockpiles -RRSS 025.082.311.001
Date Sampled: 09/23/11
Date Received: 09/23/11

Date Extracted: 09/26/11
Date Analyzed: 09/28/11 15:33
Instrument/Analyst: ECD5/AAR
GPC Cleanup: No
Sulfur Cleanup: Yes
Acid Cleanup: Yes
Florisil Cleanup: No

Sample Amount: 13.5 g-dry-wt
Final Extract Volume: 4.00 mL
Dilution Factor: 5.00
Silica Gel: Yes

Percent Moisture: 7.7%

CAS Number	Analyte	RL	Result
12674-11-2	Aroclor 1016	150	< 150 U
53469-21-9	Aroclor 1242	150	< 150 U
12672-29-6	**Aroclor 1248**	**150**	**450**
11097-69-1	**Aroclor 1254**	**150**	**520**
11096-82-5	Aroclor 1260	150	< 150 U
11104-28-2	Aroclor 1221	150	< 150 U
11141-16-5	Aroclor 1232	150	< 150 U
37324-23-5	Aroclor 1262	150	< 150 U

Reported in µg/kg (ppb)

PCB Surrogate Recovery

Decachlorobiphenyl	84.2%
Tetrachlorometaxylene	92.6%

ANALYTICAL RESOURCES INCORPORATED

ORGANICS ANALYSIS DATA SHEET
PCB by GC/ECD Method SW8082

Sample ID: MB-092611
METHOD BLANK

Lab Sample ID: MB-092611
LIMS ID: 11-20907
Matrix: Soil
Data Release Authorized: VJB
Reported: 09/30/11

QC Report No: TN81-The Boeing Company
Project: NBF Soil Stockpiles -RRSS 025.082.311.001
Date Sampled: NA
Date Received: NA

Date Extracted: 09/26/11
Date Analyzed: 09/28/11 14:17
Instrument/Analyst: ECD5/AAR
GPC Cleanup: No
Sulfur Cleanup: Yes
Acid Cleanup: Yes
Florisil Cleanup: No

Sample Amount: 12.0 g
Final Extract Volume: 4.00 mL
Dilution Factor: 1.00
Silica Gel: No

Percent Moisture: NA

CAS Number	Analyte	RL	Result
12674-11-2	Aroclor 1016	33	< 33 U
53469-21-9	Aroclor 1242	33	< 33 U
12672-29-6	Aroclor 1248	33	< 33 U
11097-69-1	Aroclor 1254	33	< 33 U
11096-82-5	Aroclor 1260	33	< 33 U
11104-28-2	Aroclor 1221	33	< 33 U
11141-16-5	Aroclor 1232	33	< 33 U
37324-23-5	Aroclor 1262	33	< 33 U

Reported in µg/kg (ppb)

PCB Surrogate Recovery

Decachlorobiphenyl	66.2%
Tetrachlorometaxylene	78.5%

ANALYTICAL RESOURCES INCORPORATED

SW8082/PCB SOIL/SEDIMENT SURROGATE RECOVERY SUMMARY

Matrix: Soil

QC Report No: TN81-The Boeing Company
Project: NBF Soil Stockpiles -RRSS
025.082.311.001

Client ID	DCBP % REC	DCBP LCL-UCL	TCMX % REC	TCMX LCL-UCL	TOT OUT
MB-092611	66.2%	51-112	78.5%	46-111	0
LCS-092611	70.0%	51-112	83.2%	46-111	0
LCSD-092611	69.2%	51-112	80.8%	46-111	0
NBF-RRSS-A-092311	84.2%	42-127	92.6%	50-114	0

Microwave (MARS) Control Limits PCBSMI
Prep Method: SW3546
Log Number Range: 11-20907 to 11-20907

FORM-II SW8082

ANALYTICAL RESOURCES INCORPORATED

ORGANICS ANALYSIS DATA SHEET
PCB by GC/ECD Method SW8082

Sample ID: LCS-092611
LCS/LCSD

Lab Sample ID: LCS-092611
LIMS ID: 11-20907
Matrix: Soil
Data Release Authorized: VTB
Reported: 09/30/11

QC Report No: TN81-The Boeing Company
Project: NBF Soil Stockpiles -RRSS
025.082.311.001
Date Sampled: NA
Date Received: NA

Date Extracted LCS/LCSD: 09/26/11

Date Analyzed LCS: 09/28/11 14:36
LCSD: 09/28/11 14:55
Instrument/Analyst LCS: ECD5/AAR
LCSD: ECD5/AAR
GPC Cleanup: No
Sulfur Cleanup: Yes
Acid Cleanup: Yes
Florisil Cleanup: No

Sample Amount LCS: 12.0 g-dry-wt
LCSD: 12.0 g-dry-wt
Final Extract Volume LCS: 4.00 mL
LCSD: 4.00 mL
Dilution Factor LCS: 1.00
LCSD: 1.00
Silica Gel: No

Percent Moisture: NA

Analyte	LCS	Spike Added-LCS	LCS Recovery	LCSD	Spike Added-LCSD	LCSD Recovery	RPD
Aroclor 1016	130	167	77.8%	131	167	78.4%	0.8%
Aroclor 1260	96.0	167	57.5%	95.6	167	57.2%	0.4%

PCB Surrogate Recovery

	LCS	LCSD
Decachlorobiphenyl	70.0%	69.2%
Tetrachlorometaxylene	83.2%	80.8%

Results reported in µg/kg (ppb)
RPD calculated using sample concentrations per SW846.

ANALYTICAL RESOURCES INCORPORATED

INORGANICS ANALYSIS DATA SHEET
TOTAL METALS

Sample ID: NBF-RRSS-A-092311
SAMPLE

Lab Sample ID: TN81A
LIMS ID: 11-20907
Matrix: Soil
Data Release Authorized:
Reported: 09/29/11

QC Report No: TN81-The Boeing Company
Project: NBF Soil Stockpiles -RRSS
025.082.311.001
Date Sampled: 09/23/11
Date Received: 09/23/11

Percent Total Solids: 91.7%

Prep Meth	Prep Date	Analysis Method	Analysis Date	CAS Number	Analyte	RL	mg/kg-dry	Q
3050B	09/26/11	6010B	09/28/11	**7440-38-2**	**Arsenic**	5	**10**	
3050B	09/26/11	6010B	09/28/11	**7440-43-9**	**Cadmium**	0.2	**0.2**	
3050B	09/26/11	6010B	09/28/11	**7440-47-3**	**Chromium**	0.5	**13.1**	
3050B	09/26/11	6010B	09/28/11	**7439-92-1**	**Lead**	2	**15**	
CLP	09/26/11	7471A	09/26/11	**7439-97-6**	**Mercury**	0.02	**0.92**	

U-Analyte undetected at given RL
RL-Reporting Limit

ANALYTICAL RESOURCES INCORPORATED

INORGANICS ANALYSIS DATA SHEET
TOTAL METALS

Sample ID: METHOD BLANK

Lab Sample ID: TN81MB
LIMS ID: 11-20907
Matrix: Soil
Data Release Authorized:
Reported: 09/29/11

QC Report No: TN81-The Boeing Company
Project: NBF Soil Stockpiles -RRSS 025.082.311.001
Date Sampled: NA
Date Received: NA

Percent Total Solids: NA

Prep Meth	Prep Date	Analysis Method	Analysis Date	CAS Number	Analyte	RL	mg/kg-dry	Q
3050B	09/26/11	6010B	09/28/11	7440-38-2	Arsenic	5	5	U
3050B	09/26/11	6010B	09/28/11	7440-43-9	Cadmium	0.2	0.2	U
3050B	09/26/11	6010B	09/28/11	7440-47-3	Chromium	0.5	0.5	U
3050B	09/26/11	6010B	09/28/11	7439-92-1	Lead	2	2	U
CLP	09/26/11	7471A	09/26/11	7439-97-6	Mercury	0.02	0.02	U

U-Analyte undetected at given RL
RL-Reporting Limit

ANALYTICAL RESOURCES INCORPORATED

INORGANICS ANALYSIS DATA SHEET
TOTAL METALS

Sample ID: LAB CONTROL

Lab Sample ID: TN81LCS
LIMS ID: 11-20907
Matrix: Soil
Data Release Authorized:
Reported: 09/29/11

QC Report No: TN81-The Boeing Company
Project: NBF Soil Stockpiles -RRSS
025.082.311.001
Date Sampled: NA
Date Received: NA

BLANK SPIKE QUALITY CONTROL REPORT

Analyte	Analysis Method	Spike Found	Spike Added	% Recovery	Q
Arsenic	6010B	201	200	100%	
Cadmium	6010B	49.9	50.0	99.8%	
Chromium	6010B	50.2	50.0	100%	
Lead	6010B	199	200	99.5%	
Mercury	7471A	0.53	0.50	106%	

Reported in mg/kg-dry

N-Control limit not met
NA-Not Applicable, Analyte Not Spiked
Control Limits: 80-120%

Analytical Resources, Incorporated
Analytical Chemists and Consultants

October 20, 2011

Jeremy Davis
Landau Associates, Inc.
130 Second Ave
Edmonds, WA 98020

RE: Project: NBF – LTST
ARI Job: TP85

Dear Jeremy:

Please find enclosed the Chain of Custody (COC) record, sample receipt documentation, and analytical results for the above referenced project. Analytical Resources, Inc. (ARI) accepted three soil samples in good condition on October 4, 2011. One cooler was received with a temperature of 5.7°C.

The samples were analyzed for PCBs, NWTPH-Dx, NWTPH-Gx and Total Metals, as requested on the COC.

There were no irregularities with the samples.

Quality control analysis results are included for your review. Copies of the reports and all associated raw data will be kept on file electronically at ARI. If you have any questions or require additional information, please contact me at your convenience.

Sincerely,
ANALYTICAL RESOURCES, INC

Kelly Bottem
Client Services Manager
(206) 695-6211
kellyb@arilabs.com
www.arilabs.com

cc: Carl Bach, The Boeing Company, P.O. Box 3707, M/S 1W-12, Seattle, WA 98124-2207

4611 South 134th Place, Suite 100 • Tukwila WA 98168 • **206-695-6200** • **206-695-6201** fax

☒ Seattle/Edmonds (425) 778-0907
☐ Tacoma (253) 926-2493
☐ Spokane (509) 327-9737
☐ Portland (503) 542-1080
☐ _____

LANDAU ASSOCIATES

Chain-of-Custody Record

TP85

Date 10/3/11
Page 1 of 1

Project Name NBF- CTST
Project No. 025.082.311.001
Project Location/Event NBF- RRSS
Sampler's Name Jeremy Davis
Project Contact Jeremy D, Carl B, Joe K
Send Results To Jeremy D, Carl B, Joe K,

Turnaround Time
☒ Standard
☐ Accelerated
☐ _____

Testing Parameters

Sample I.D.	Date	Time	Matrix	No. of Containers	PCBs	NWTPH-Dx	NWTPH-Gx	METALS - MTCA 5
NBF-RRSS-A-100311	10/3/11	1520	S	2	✓	✓	✓	✓
NBF-RRSS-B-100311	"	1530	"	"	✓	✓	✓	✓
NBF-RRSS-C-100311	"	1540	"	"	✓	✓	✓	✓

Observations/Comments

~~X Allow water samples to settle, collect aliquot from clear portion~~ NA - JMD

~~X NWTPH-Dx - run acid wash/silica gel cleanup~~ NOT NEC. JMD

___ run samples standardized to _____ product

___ Analyze for EPH if no specific product identified

VOC/BTEX/VPH (soil):
___ non-preserved
___ preserved w/methanol
___ preserved w/sodium bisulfate
___ Freeze upon receipt

___ Dissolved metal water samples field filtered

Other Arsenic
Cadmium
Chromium
Lead
Mercury

Special Shipment/Handling or Storage Requirements Cooler w/ wet ice

Method of Shipment Picked up by ART

Relinquished by	Received by	Relinquished by	Received by
Signature [signature]	Signature [signature]	Signature	Signature
Printed Name Jeremy Davis	Printed Name Joe Ugas	Printed Name	Printed Name
Company LAI	Company ART	Company	Company
Date 10/3/11 Time 1730	Date 10/4/11 Time 13:17	Date ____ Time ____	Date ____ Time ____

WHITE COPY - Project File YELLOW COPY - Laboratory PINK COPY - Client Representative

Rev 8/09

Analytical Resources, Incorporated
Analytical Chemists and Consultants

Cooler Receipt Form

ARI Client: Landau Edmonds | Boeing Project Name: NBF-RRSS

COC No(s): _____ NA Delivered by: Fed-Ex UPS Courier Hand Delivered Other: _____

Assigned ARI Job No. TP85 Tracking No _____ NA

Preliminary Examination Phase:

Were intact, properly signed and dated custody seals attached to the outside of to cooler?	YES	NO
Were custody papers included with the cooler?	YES	NO
Were custody papers properly filled out (ink, signed, etc.)	YES	NO

Temperature of Cooler(s) (°C) (recommended 2.0-6.0 °C for chemistry) 5.7

If cooler temperature is out of compliance fill out form 00070F Temp Gun ID#: 90941619

Cooler Accepted by: JU Date: 10/4/11 Time: 13:17

Complete custody forms and attach all shipping documents

Log-In Phase:

Was a temperature blank included in the cooler? YES NO

What kind of packing material was used? Bubble Wrap Wet Ice Gel Packs Baggies Foam Block Paper Other: _____

Was sufficient ice used (if appropriate)?	NA	YES	NO
Were all bottles sealed in individual plastic bags?		YES	NO
Did all bottles arrive in good condition (unbroken)?		YES	NO
Were all bottle labels complete and legible?		YES	NO
Did the number of containers listed on COC match with the number of containers received?		YES	NO
Did all bottle labels and tags agree with custody papers?		YES	NO
Were all bottles used correct for the requested analyses?		YES	NO
Do any of the analyses (bottles) require preservation? (attach preservation sheet, excluding VOCs)	NA	YES	NO
Were all VOC vials free of air bubbles?	NA	YES	NO
Was sufficient amount of sample sent in each bottle?		YES	NO
Date VOC Trip Blank was made at ARI	NA		

Was Sample Split by ARI : NA YES Date/Time: _____ Equipment: _____ Split by: _____

Samples Logged by: TS Date: 10-4-11 Time: 1335

***** Notify Project Manager of discrepancies or concerns *****

Sample ID on Bottle	Sample ID on COC	Sample ID on Bottle	Sample ID on COC

Additional Notes, Discrepancies, & Resolutions:

By Date

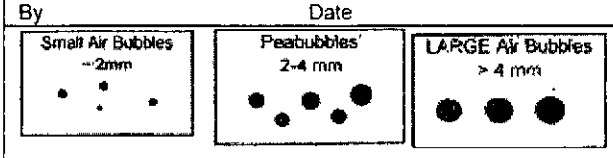

Small → "sm"
Peabubbles → "pb"
Large → "lg"
Headspace → "hs"

Sample ID Cross Reference Report

ANALYTICAL RESOURCES INCORPORATED

ARI Job No: TP85
Client: The Boeing Company
Project Event: 025.082.311.001
Project Name: NBF-LTST

	Sample ID	ARI Lab ID	ARI LIMS ID	Matrix	Sample Date/Time	VTSR
1.	NBF-RRSS-A-100311	TP85A	11-22209	Soil	10/03/11 15:20	10/04/11 13:35
2.	NBF-RRSS-B-100311	TP85B	11-22210	Soil	10/03/11 15:30	10/04/11 13:35
3.	NBF-RRSS-C-100311	TP85C	11-22211	Soil	10/03/11 10:40	10/04/11 13:35

Printed 10/04/11

ANALYTICAL RESOURCES INCORPORATED

ORGANICS ANALYSIS DATA SHEET
PCB by GC/ECD Method SW8082

Sample ID: NBF-RRSS-A-100311
SAMPLE

Lab Sample ID: TP85A
LIMS ID: 11-22209
Matrix: Soil
Data Release Authorized:
Reported: 10/20/11

QC Report No: TP85-The Boeing Company
Project: NBF-LTST
025.082.311.001
Date Sampled: 10/03/11
Date Received: 10/04/11

Date Extracted: 10/12/11
Date Analyzed: 10/19/11 20:26
Instrument/Analyst: ECD5/JGR
GPC Cleanup: No
Sulfur Cleanup: Yes
Acid Cleanup: Yes
Florisil Cleanup: No

Sample Amount: 13.1 g-dry-wt
Final Extract Volume: 4.00 mL
Dilution Factor: 1.00
Silica Gel: No

Percent Moisture: 7.7%

CAS Number	Analyte	RL	Result
12674-11-2	Aroclor 1016	30	< 30 U
53469-21-9	Aroclor 1242	30	< 30 U
12672-29-6	Aroclor 1248	46	< 46 Y
11097-69-1	**Aroclor 1254**	**30**	**65**
11096-82-5	Aroclor 1260	30	< 30 U
11104-28-2	Aroclor 1221	30	< 30 U
11141-16-5	Aroclor 1232	30	< 30 U
37324-23-5	Aroclor 1262	30	< 30 U

Reported in µg/kg (ppb)

PCB Surrogate Recovery

Decachlorobiphenyl	62.0%
Tetrachlorometaxylene	68.8%

ANALYTICAL RESOURCES INCORPORATED

ORGANICS ANALYSIS DATA SHEET
PCB by GC/ECD Method SW8082

Sample ID: NBF-RRSS-B-100311
SAMPLE

Lab Sample ID: TP85B
LIMS ID: 11-22210
Matrix: Soil
Data Release Authorized:
Reported: 10/20/11

QC Report No: TP85-The Boeing Company
Project: NBF-LTST
025.082.311.001
Date Sampled: 10/03/11
Date Received: 10/04/11

Date Extracted: 10/12/11
Date Analyzed: 10/19/11 20:45
Instrument/Analyst: ECD5/JGR
GPC Cleanup: No
Sulfur Cleanup: Yes
Acid Cleanup: Yes
Florisil Cleanup: No

Sample Amount: 12.3 g-dry-wt
Final Extract Volume: 4.00 mL
Dilution Factor: 1.00
Silica Gel: No

Percent Moisture: 12.8%

CAS Number	Analyte	RL	Result
12674-11-2	Aroclor 1016	33	< 33 U
53469-21-9	Aroclor 1242	33	< 33 U
12672-29-6	Aroclor 1248	33	< 33 U
11097-69-1	**Aroclor 1254**	**33**	**36**
11096-82-5	Aroclor 1260	33	< 33 U
11104-28-2	Aroclor 1221	33	< 33 U
11141-16-5	Aroclor 1232	33	< 33 U
37324-23-5	Aroclor 1262	33	< 33 U

Reported in µg/kg (ppb)

PCB Surrogate Recovery

Decachlorobiphenyl	61.5%
Tetrachlorometaxylene	77.2%

ANALYTICAL RESOURCES INCORPORATED

ORGANICS ANALYSIS DATA SHEET
PCB by GC/ECD Method SW8082

Sample ID: NBF-RRSS-C-100311
SAMPLE

Lab Sample ID: TP85C
LIMS ID: 11-22211
Matrix: Soil
Data Release Authorized:
Reported: 10/20/11

QC Report No: TP85-The Boeing Company
Project: NBF-LTST
025.082.311.001
Date Sampled: 10/03/11
Date Received: 10/04/11

Date Extracted: 10/12/11
Date Analyzed: 10/19/11 21:04
Instrument/Analyst: ECD5/JGR
GPC Cleanup: No
Sulfur Cleanup: Yes
Acid Cleanup: Yes
Florisil Cleanup: No

Sample Amount: 12.4 g-dry-wt
Final Extract Volume: 4.00 mL
Dilution Factor: 1.00
Silica Gel: No

Percent Moisture: 23.2%

CAS Number	Analyte	RL	Result
12674-11-2	Aroclor 1016	32	< 32 U
53469-21-9	Aroclor 1242	32	< 32 U
12672-29-6	Aroclor 1248	32	< 32 U
11097-69-1	Aroclor 1254	32	< 32 U
11096-82-5	Aroclor 1260	32	< 32 U
11104-28-2	Aroclor 1221	32	< 32 U
11141-16-5	Aroclor 1232	32	< 32 U
37324-23-5	Aroclor 1262	32	< 32 U

Reported in µg/kg (ppb)

PCB Surrogate Recovery

Decachlorobiphenyl	54.5%
Tetrachlorometaxylene	67.2%

ANALYTICAL RESOURCES INCORPORATED

ORGANICS ANALYSIS DATA SHEET
PCB by GC/ECD Method SW8082

Sample ID: MB-101211
METHOD BLANK

Lab Sample ID: MB-101211
LIMS ID: 11-22209
Matrix: Soil
Data Release Authorized:
Reported: 10/20/11

QC Report No: TP85-The Boeing Company
Project: NBF-LTST
025.082.311.001
Date Sampled: NA
Date Received: NA

Date Extracted: 10/12/11
Date Analyzed: 10/19/11 16:02
Instrument/Analyst: ECD5/JGR
GPC Cleanup: No
Sulfur Cleanup: Yes
Acid Cleanup: Yes
Florisil Cleanup: No

Sample Amount: 12.0 g
Final Extract Volume: 4.00 mL
Dilution Factor: 1.00
Silica Gel: No

Percent Moisture: NA

CAS Number	Analyte	RL	Result
12674-11-2	Aroclor 1016	33	< 33 U
53469-21-9	Aroclor 1242	33	< 33 U
12672-29-6	Aroclor 1248	33	< 33 U
11097-69-1	Aroclor 1254	33	< 33 U
11096-82-5	Aroclor 1260	33	< 33 U
11104-28-2	Aroclor 1221	33	< 33 U
11141-16-5	Aroclor 1232	33	< 33 U
37324-23-5	Aroclor 1262	33	< 33 U

Reported in µg/kg (ppb)

PCB Surrogate Recovery

Decachlorobiphenyl	76.8%
Tetrachlorometaxylene	80.5%

ANALYTICAL RESOURCES INCORPORATED

SW8082/PCB SOIL/SEDIMENT SURROGATE RECOVERY SUMMARY

Matrix: Soil

QC Report No: TP85-The Boeing Company
Project: NBF-LTST
025.082.311.001

Client ID	DCBP % REC	DCBP LCL-UCL	TCMX % REC	TCMX LCL-UCL	TOT OUT
MB-101211	76.8%	51-112	80.5%	46-111	0
LCS-101211	77.5%	51-112	86.0%	46-111	0
LCSD-101211	77.2%	51-112	77.2%	46-111	0
NBF-RRSS-A-100311	62.0%	42-127	68.8%	50-114	0
NBF-RRSS-B-100311	61.5%	42-127	77.2%	50-114	0
NBF-RRSS-C-100311	54.5%	42-127	67.2%	50-114	0

Microwave (MARS) Control Limits PCBSMI
Prep Method: SW3546
Log Number Range: 11-22209 to 11-22211

FORM-II SW8082

ANALYTICAL RESOURCES INCORPORATED

ORGANICS ANALYSIS DATA SHEET
PCB by GC/ECD Method SW8082

Sample ID: LCS-101211
LCS/LCSD

Lab Sample ID: LCS-101211
LIMS ID: 11-22209
Matrix: Soil
Data Release Authorized:
Reported: 10/20/11

QC Report No: TP85-The Boeing Company
Project: NBF-LTST
025.082.311.001
Date Sampled: NA
Date Received: NA

Date Extracted LCS/LCSD: 10/12/11

Date Analyzed LCS: 10/19/11 16:21
LCSD: 10/19/11 16:40
Instrument/Analyst LCS: ECD5/JGR
LCSD: ECD5/JGR
GPC Cleanup: No
Sulfur Cleanup: Yes
Acid Cleanup: Yes
Florisil Cleanup: No

Sample Amount LCS: 12.0 g-dry-wt
LCSD: 12.0 g-dry-wt
Final Extract Volume LCS: 4.00 mL
LCSD: 4.00 mL
Dilution Factor LCS: 1.00
LCSD: 1.00
Silica Gel: No

Percent Moisture: NA

Analyte	LCS	Spike Added-LCS	LCS Recovery	LCSD	Spike Added-LCSD	LCSD Recovery	RPD
Aroclor 1016	135	167	80.8%	122	167	73.1%	10.1%
Aroclor 1260	139	167	83.2%	143	167	85.6%	2.8%

PCB Surrogate Recovery

	LCS	LCSD
Decachlorobiphenyl	77.5%	77.2%
Tetrachlorometaxylene	86.0%	77.2%

Results reported in µg/kg (ppb)
RPD calculated using sample concentrations per SW846.

ANALYTICAL RESOURCES INCORPORATED

ORGANICS ANALYSIS DATA SHEET
TOTAL DIESEL RANGE HYDROCARBONS
NWTPHD by GC/FID
Page 1 of 1
Matrix: Soil

QC Report No: TP85-The Boeing Company
Project: NBF-LTST
025.082.311.001
Date Received: 10/04/11

Data Release Authorized:
Reported: 10/17/11

ARI ID	Sample ID	Extraction Date	Analysis Date	EFV DL	Range	RL	Result
MB-101111	Method Blank	10/11/11	10/14/11	1.00	Diesel	5.0	< 5.0 U
11-22209	HC ID: ---		FID4A	1.0	Motor Oil	10	< 10 U
					o-Terphenyl		109%
TP85A	NBF-RRSS-A-100311	10/11/11	10/14/11	1.00	**Diesel**	**5.3**	**5.5**
11-22209	HC ID: **DRO/MOTOR OIL**		FID4A	1.0	**Motor Oil**	**11**	**16**
					o-Terphenyl		103%
TP85B	NBF-RRSS-B-100311	10/11/11	10/14/11	1.00	**Diesel**	**5.6**	**5.8**
11-22210	HC ID: **DRO/MOTOR OIL**		FID4A	1.0	**Motor Oil**	**11**	**12**
					o-Terphenyl		89.6%
TP85C	NBF-RRSS-C-100311	10/11/11	10/15/11	1.00	**Diesel**	**6.5**	**11**
11-22211	HC ID: **DRO/MOTOR OIL**		FID4A	1.0	**Motor Oil**	**13**	**20**
					o-Terphenyl		83.4%

Reported in mg/kg (ppm)

EFV-Effective Final Volume in mL.
DL-Dilution of extract prior to analysis.
RL-Reporting limit.

Diesel quantitation on total peaks in the range from C12 to C24.
Motor Oil quantitation on total peaks in the range from C24 to C38.
HC ID: DRO/RRO indicates results of organics or additional hydrocarbons in ranges are not identifiable.

ANALYTICAL RESOURCES INCORPORATED

ORGANICS ANALYSIS DATA SHEET
NWTPHD by GC/FID

Sample ID: LCS-101111
LCS/LCSD

Lab Sample ID: LCS-101111
LIMS ID: 11-22209
Matrix: Soil
Data Release Authorized:
Reported: 10/17/11

QC Report No: TP85-The Boeing Company
Project: NBF-LTST
025.082.311.001
Date Sampled: NA
Date Received: NA

Date Extracted LCS/LCSD: 10/11/11

Date Analyzed LCS: 10/14/11 22:27
LCSD: 10/14/11 22:51
Instrument/Analyst LCS: FID4A/MS
LCSD: FID4A/MS

Sample Amount LCS: 10.0 g-dry-wt
LCSD: 10.0 g-dry-wt
Final Extract Volume LCS: 1.0 mL
LCSD: 1.0 mL
Dilution Factor LCS: 1.00
LCSD: 1.00

Range	LCS	Spike Added-LCS	LCS Recovery	LCSD	Spike Added-LCSD	LCSD Recovery	RPD
Diesel	148	150	98.7%	150	150	100%	1.3%

TPHD Surrogate Recovery

	LCS	LCSD
o-Terphenyl	105%	106%

Results reported in mg/kg
RPD calculated using sample concentrations per SW846.

ANALYTICAL RESOURCES INCORPORATED

TPHD SURROGATE RECOVERY SUMMARY

Matrix: Soil

QC Report No: TP85-The Boeing Company
Project: NBF-LTST
025.082.311.001

Client ID	OTER	TOT OUT
101111MBS	109%	0
101111LCS	105%	0
101111LCSD	106%	0
NBF-RRSS-A-100311	103%	0
NBF-RRSS-B-100311	89.6%	0
NBF-RRSS-C-100311	83.4%	0

	LCS/MB LIMITS	QC LIMITS
(OTER) = o-Terphenyl	(50-150)	(50-150)

Prep Method: SW3546
Log Number Range: 11-22209 to 11-22211

FORM-II TPHD

ANALYTICAL RESOURCES INCORPORATED

TOTAL DIESEL RANGE HYDROCARBONS-EXTRACTION REPORT

ARI Job: TP85
Matrix: Soil
Project: NBF-LTST
Date Received: 10/04/11
025.082.311.001

ARI ID	Client ID	Client Amt	Final Vol	Basis	Prep Date
11-22209-101111MB1	Method Blank	10.0 g	1.00 mL	-	10/11/11
11-22209-101111LCS1	Lab Control	10.0 g	1.00 mL	-	10/11/11
11-22209-101111LCSD1	Lab Control Dup	10.0 g	1.00 mL	-	10/11/11
11-22209-TP85A	NBF-RRSS-A-100311	9.38 g	1.00 mL	D	10/11/11
11-22210-TP85B	NBF-RRSS-B-100311	8.85 g	1.00 mL	D	10/11/11
11-22211-TP85C	NBF-RRSS-C-100311	7.70 g	1.00 mL	D	10/11/11

Basis: D=Dry Weight W=As Received

ANALYTICAL RESOURCES INCORPORATED

ORGANICS ANALYSIS DATA SHEET
TPHG by Method NWTPHG
Matrix: Soil

Data Release Authorized: MW
Reported: 10/12/11

QC Report No: TP85-The Boeing Company
Project: NBF-LTST
Event: 025.082.311.001
Date Sampled: 10/03/11
Date Received: 10/04/11

ARI ID	Client ID	Analysis Date	Basis	Range	Result
MB-100611	Method Blank	10/06/11	Dry	Gasoline	< 5.0 U
11-22209		PID2		HC ID	---
				Trifluorotoluene	92.0%
				Bromobenzene	95.0%
TP85A	NBF-RRSS-A-100311	10/06/11	Dry	Gasoline	< 6.2 U
11-22209		PID2		HC ID	---
				Trifluorotoluene	86.7%
				Bromobenzene	89.2%
TP85B	NBF-RRSS-B-100311	10/06/11	Dry	Gasoline	< 7.1 U
11-22210		PID2		HC ID	---
				Trifluorotoluene	90.7%
				Bromobenzene	92.5%
TP85C	NBF-RRSS-C-100311	10/06/11	Dry	Gasoline	< 9.0 U
11-22211		PID2		HC ID	---
				Trifluorotoluene	119%
				Bromobenzene	123%

Gasoline values reported in mg/kg (ppm)

Quantitation on total peaks in the gasoline range from Toluene to Naphthalene.

GAS: Indicates the presence of gasoline or weathered gasoline.
GRO: Positive result that does not match an identifiable gasoline pattern.

Results corrected for soil moisture content per Section 11.10.5 of EPA Method 8000C.

ANALYTICAL RESOURCES INCORPORATED

TPHG SOIL SURROGATE RECOVERY SUMMARY

ARI Job: TP85
Matrix: Soil

QC Report No: TP85-The Boeing Company
Project: NBF-LTST
Event: 025.082.311.001

Client ID	BFB	TFT	BBZ	TOT OUT
MB-100611	NA	92.0%	95.0%	0
LCS-100611	NA	102%	101%	0
LCSD-100611	NA	104%	102%	0
NBF-RRSS-A-100311	NA	86.7%	89.2%	0
NBF-RRSS-B-100311	NA	90.7%	92.5%	0
NBF-RRSS-C-100311	NA	119%	123%	0

	LCS/MB LIMITS	QC LIMITS
(BFB) = Bromofluorobenzene	(70-130)	(70-130)
(TFT) = Trifluorotoluene	(80-120)	(66-123)
(BBZ) = Bromobenzene	(80-120)	(62-130)

Log Number Range: 11-22209 to 11-22211

FORM II TPHG

ANALYTICAL RESOURCES INCORPORATED

ORGANICS ANALYSIS DATA SHEET
TPHG by Method NWTPHG

Sample ID: LCS-100611
LAB CONTROL SAMPLE

Lab Sample ID: LCS-100611
LIMS ID: 11-22209
Matrix: Soil
Data Release Authorized: MW
Reported: 10/12/11

QC Report No: TP85-The Boeing Company
Project: NBF-LTST
Event: 025.082.311.001
Date Sampled: NA
Date Received: NA

Date Analyzed LCS: 10/06/11 08:07
LCSD: 10/06/11 08:35
Instrument/Analyst LCS: PID2/MH
LCSD: PID2/MH

Purge Volume: 5.0 mL

Sample Amount LCS: 100 mg-dry-wt
LCSD: 100 mg-dry-wt

Analyte	LCS	Spike Added-LCS	LCS Recovery	LCSD	Spike Added-LCSD	LCSD Recovery	RPD
Gasoline Range Hydrocarbons	50.6	50.0	101%	51.0	50.0	102%	0.8%

Reported in mg/kg (ppm)

RPD calculated using sample concentrations per SW846.

TPHG Surrogate Recovery

	LCS	LCSD
Trifluorotoluene	102%	104%
Bromobenzene	101%	102%

ANALYTICAL RESOURCES INCORPORATED

INORGANICS ANALYSIS DATA SHEET
TOTAL METALS

Sample ID: NBF-RRSS-A-100311
SAMPLE

Lab Sample ID: TP85A
LIMS ID: 11-22209
Matrix: Soil
Data Release Authorized:
Reported: 10/12/11

QC Report No: TP85-The Boeing Company
Project: NBF-LTST
025.082.311.001
Date Sampled: 10/03/11
Date Received: 10/04/11

Percent Total Solids: 91.8%

Prep Meth	Prep Date	Analysis Method	Analysis Date	CAS Number	Analyte	RL	mg/kg-dry	Q
3050B	10/06/11	6010B	10/11/11	7440-38-2	Arsenic	5	5	U
3050B	10/06/11	6010B	10/11/11	7440-43-9	Cadmium	0.2	0.2	U
3050B	10/06/11	6010B	10/11/11	**7440-47-3**	**Chromium**	0.5	**12.9**	
3050B	10/06/11	6010B	10/11/11	**7439-92-1**	**Lead**	2	**4**	
CLP	10/06/11	7471A	10/10/11	7439-97-6	Mercury	0.02	0.02	U

U-Analyte undetected at given RL
RL-Reporting Limit

ANALYTICAL RESOURCES INCORPORATED

INORGANICS ANALYSIS DATA SHEET
TOTAL METALS

Sample ID: NBF-RRSS-B-100311
SAMPLE

Lab Sample ID: TP85B
LIMS ID: 11-22210
Matrix: Soil
Data Release Authorized:
Reported: 10/12/11

QC Report No: TP85-The Boeing Company
Project: NBF-LTST
025.082.311.001
Date Sampled: 10/03/11
Date Received: 10/04/11

Percent Total Solids: 85.7%

Prep Meth	Prep Date	Analysis Method	Analysis Date	CAS Number	Analyte	RL	mg/kg-dry	Q
3050B	10/06/11	6010B	10/11/11	**7440-38-2**	**Arsenic**	5	**7**	
3050B	10/06/11	6010B	10/11/11	**7440-43-9**	**Cadmium**	0.2	**0.3**	
3050B	10/06/11	6010B	10/11/11	**7440-47-3**	**Chromium**	0.5	**14.2**	
3050B	10/06/11	6010B	10/11/11	**7439-92-1**	**Lead**	2	**9**	
CLP	10/06/11	7471A	10/10/11	**7439-97-6**	**Mercury**	0.02	**0.05**	

U-Analyte undetected at given RL
RL-Reporting Limit

ANALYTICAL RESOURCES INCORPORATED

INORGANICS ANALYSIS DATA SHEET
TOTAL METALS

Sample ID: NBF-RRSS-C-100311
SAMPLE

Lab Sample ID: TP85C
LIMS ID: 11-22211
Matrix: Soil
Data Release Authorized:
Reported: 10/12/11

QC Report No: TP85-The Boeing Company
Project: NBF-LTST
025.082.311.001
Date Sampled: 10/03/11
Date Received: 10/04/11

Percent Total Solids: 77.3%

Prep Meth	Prep Date	Analysis Method	Analysis Date	CAS Number	Analyte	RL	mg/kg-dry	Q
3050B	10/06/11	6010B	10/11/11	**7440-38-2**	**Arsenic**	6	**8**	
3050B	10/06/11	6010B	10/11/11	**7440-43-9**	**Cadmium**	0.2	**0.3**	
3050B	10/06/11	6010B	10/11/11	**7440-47-3**	**Chromium**	0.6	**15.7**	
3050B	10/06/11	6010B	10/11/11	**7439-92-1**	**Lead**	2	**31**	
CLP	10/06/11	7471A	10/10/11	**7439-97-6**	**Mercury**	0.02	**0.11**	

U-Analyte undetected at given RL
RL-Reporting Limit

ANALYTICAL RESOURCES INCORPORATED

INORGANICS ANALYSIS DATA SHEET
TOTAL METALS

Sample ID: METHOD BLANK

Lab Sample ID: TP85MB
LIMS ID: 11-22209
Matrix: Soil
Data Release Authorized:
Reported: 10/12/11

QC Report No: TP85-The Boeing Company
Project: NBF-LTST
025.082.311.001
Date Sampled: NA
Date Received: NA

Percent Total Solids: NA

Prep Meth	Prep Date	Analysis Method	Analysis Date	CAS Number	Analyte	RL	mg/kg-dry	Q
3050B	10/06/11	6010B	10/11/11	7440-38-2	Arsenic	5	5	U
3050B	10/06/11	6010B	10/11/11	7440-43-9	Cadmium	0.2	0.2	U
3050B	10/06/11	6010B	10/11/11	7440-47-3	Chromium	0.5	0.5	U
3050B	10/06/11	6010B	10/11/11	7439-92-1	Lead	2	2	U
CLP	10/06/11	7471A	10/10/11	7439-97-6	Mercury	0.02	0.02	U

U-Analyte undetected at given RL
RL-Reporting Limit

ANALYTICAL RESOURCES INCORPORATED

INORGANICS ANALYSIS DATA SHEET
TOTAL METALS

Sample ID: LAB CONTROL

Lab Sample ID: TP85LCS
LIMS ID: 11-22209
Matrix: Soil
Data Release Authorized:
Reported: 10/12/11

QC Report No: TP85-The Boeing Company
Project: NBF-LTST
025.082.311.001
Date Sampled: NA
Date Received: NA

BLANK SPIKE QUALITY CONTROL REPORT

Analyte	Analysis Method	Spike Found	Spike Added	% Recovery	Q
Arsenic	6010B	214	200	107%	
Cadmium	6010B	55.6	50.0	111%	
Chromium	6010B	54.4	50.0	109%	
Lead	6010B	210	200	105%	
Mercury	7471A	0.50	0.50	100%	

Reported in mg/kg-dry

N-Control limit not met
NA-Not Applicable, Analyte Not Spiked
Control Limits: 80-120%

Analytical Resources, Incorporated
Analytical Chemists and Consultants

October 28, 2011

Jeremy Davis
Landau Associates, Inc.
130 Second Ave
Edmonds, WA 98020

RE: Project: NBF – LTST 025082. 311.001
ARI Job: TS21

Dear Jeremy:

Please find enclosed the Chain of Custody (COC) record, sample receipt documentation, and analytical results for the above referenced project. Analytical Resources, Inc. (ARI) accepted one soil sample in good condition on October 14, 2011. One cooler was received with a temperature of 5.3°C.

The samples were analyzed for PCBs, Total Metals, NWTPH-Gx and NWTPH-Dx, as requested on the COC.

There were no irregularities with the sample.

Quality control analysis results are included for your review. Copies of the reports and all associated raw data will be kept on file electronically at ARI. If you have any questions or require additional information, please contact me at your convenience.

Sincerely,
ANALYTICAL RESOURCES, INC

Kelly Bottem
Client Services Manager
(206) 695-6211
kellyb@arilabs.com
www.arilabs.com

cc: Carl Bach, The Boeing Company, P.O. Box 3707, M/S 1W-12, Seattle, WA 98124-2207

4611 South 134th Place, Suite 100 • Tukwila WA 98168 • **206-695-6200** • **206-695-6201** fax

☐ Seattle/Edmonds (425) 778-0907
☐ Tacoma (253) 926-2493
☐ Spokane (509) 327-9737
☐ Portland (503) 542-1080
☐ _____

LANDAU ASSOCIATES

Chain-of-Custody Record

Date 10/14/11
Page 1 of 1

Project Name NBF-LTST
Project No. 025.082.311.007
Project Location/Event Stockpile Sampling
Sampler's Name Jeremy Davis
Project Contact Jeremy D, Carl B, Kris H.
Send Results To Jeremy D, Carl B, Kris H, Jack K

Turnaround Time
☒ Standard
☐ Accelerated
☐ _____

Testing Parameters

Sample I.D.	Date	Time	Matrix	No. of Containers	PCBs	Metals (MTCA-5)	NWTPH-Dx	NWTPH-G												Observations/Comments
NBF-RRSS-A-101411	10/14/11	1100	Soil	2	✓	✓	✓	✓												~~X Allow water samples to settle, collect aliquot from clear portion~~ NA - JMD
																				~~X NWTPH-Dx run acid wash/silica gel cleanup~~ NOT NEC - JMD
																				___ run samples standardized to _____ product
																				___ Analyze for EPH if no specific product identified
																				VOC/BTEX/VPH (soil):
																				___ non-preserved
																				___ preserved w/methanol
																				___ preserved w/sodium bisulfate
																				___ Freeze upon receipt
																				___ Dissolved metal water samples field filtered
																				Other ☆ Arsenic
																				Cadmium
																				Chromium
																				Lead
																				Mercury

Special Shipment/Handling or Storage Requirements: Cooler w/ wet ice

Method of Shipment: Drop off @ ARI

Relinquished by	Received by	Relinquished by	Received by
Signature:	Signature:	Signature:	Signature:
Printed Name: JEREMY DAVIS	Printed Name: Jennifer Millsap	Printed Name:	Printed Name:
Company: LAI	Company: ARI	Company:	Company:
Date: 10/14/11 Time: 1240	Date: 10/14/11 Time: 1240	Date: Time:	Date: Time:

WHITE COPY - Project File YELLOW COPY - Laboratory PINK COPY - Client Representative

Rev 8/09

Sample ID Cross Reference Report

ANALYTICAL RESOURCES INCORPORATED

ARI Job No: TS21
Client: The Boeing Company
Project Event: 025.082.311.001
Project Name: NBF-LTST

	Sample ID	ARI Lab ID	ARI LIMS ID	Matrix	Sample Date/Time	VTSR
1.	NBF-RRSS-A-101411	TS21A	11-23580	Soil	10/14/11 11:00	10/14/11 12:40

Printed 10/14/11

Analytical Resources, Incorporated
Analytical Chemists and Consultants

Cooler Receipt Form

ARI Client: Boeing

Project Name: NBF LTST

COC No(s) _____ (NA)

Delivered by: Fed-Ex UPS Courier Hand Delivered Other: _____

Assigned ARI Job No. TS 21

Tracking No: _____ (NA)

Preliminary Examination Phase:

Were intact, properly signed and dated custody seals attached to the outside of to cooler?	YES	(NO)
Were custody papers included with the cooler?	(YES)	NO
Were custody papers properly filled out (ink, signed, etc.)	(YES)	NO

Temperature of Cooler(s) (°C) (recommended 2.0-6.0 °C for chemistry). 5.3

If cooler temperature is out of compliance fill out form 00070F Temp Gun ID#: 90877952

Cooler Accepted by: JM Date: 10/14/11 Time: 1240

Complete custody forms and attach all shipping documents

Log-In Phase:

Was a temperature blank included in the cooler?		YES	NO
What kind of packing material was used? Bubble Wrap (Wet ice) Gel Packs (Baggies) Foam Block Paper Other: _____			
Was sufficient ice used (if appropriate)?	NA	(YES)	NO
Were all bottles sealed in individual plastic bags?		(YES)	NO
Did all bottles arrive in good condition (unbroken)?		(YES)	NO
Were all bottle labels complete and legible?		(YES)	NO
Did the number of containers listed on COC match with the number of containers received?		(YES)	NO
Did all bottle labels and tags agree with custody papers?		(YES)	NO
Were all bottles used correct for the requested analyses?		(YES)	NO
Do any of the analyses (bottles) require preservation? (attach preservation sheet, excluding VOCs)	(NA)	YES	NO
Were all VOC vials free of air bubbles?	(NA)	YES	NO
Was sufficient amount of sample sent in each bottle?		(YES)	NO
Date VOC Trip Blank was made at ARI.	(NA)		

Was Sample Split by ARI: (NA) YES Date/Time: _____ Equipment: _____ Split by: _____

Samples Logged by: ICS Date: 10/14/11 Time: 1350

***** Notify Project Manager of discrepancies or concerns *****

Sample ID on Bottle	Sample ID on COC	Sample ID on Bottle	Sample ID on COC

Additional Notes, Discrepancies, & Resolutions:

By Date

Small Air Bubbles ~2mm	Peabubbles 2-4 mm	LARGE Air Bubbles > 4 mm	
			Small → "sm"
			Peabubbles → "pb"
			Large → "lg"
			Headspace → "hs"

ANALYTICAL RESOURCES INCORPORATED

ORGANICS ANALYSIS DATA SHEET
PCB by GC/ECD Method SW8082

Sample ID: NBF-RRSS-A-101411
SAMPLE

Lab Sample ID: TS21A
LIMS ID: 11-23580
Matrix: Soil
Data Release Authorized:
Reported: 10/28/11

QC Report No: TS21-The Boeing Company
Project: NBF-LTST
025.082.311.001
Date Sampled: 10/14/11
Date Received: 10/14/11

Date Extracted: 10/25/11
Date Analyzed: 10/28/11 13:34
Instrument/Analyst: ECD7/AAR
GPC Cleanup: No
Sulfur Cleanup: Yes
Acid Cleanup: Yes
Florisil Cleanup: No

Sample Amount: 12.7 g-dry-wt
Final Extract Volume: 4.00 mL
Dilution Factor: 1.00
Silica Gel: No

Percent Moisture: 16.2%

CAS Number	Analyte	RL	Result
12674-11-2	Aroclor 1016	31	< 31 U
53469-21-9	Aroclor 1242	31	< 31 U
12672-29-6	Aroclor 1248	31	< 31 U
11097-69-1	Aroclor 1254	31	< 31 U
11096-82-5	Aroclor 1260	31	< 31 U
11104-28-2	Aroclor 1221	31	< 31 U
11141-16-5	Aroclor 1232	31	< 31 U
37324-23-5	Aroclor 1262	31	< 31 U

Reported in µg/kg (ppb)

PCB Surrogate Recovery

Decachlorobiphenyl	76.8%
Tetrachlorometaxylene	82.8%

ANALYTICAL RESOURCES INCORPORATED

ORGANICS ANALYSIS DATA SHEET
PCB by GC/ECD Method SW8082

Sample ID: MB-102511
METHOD BLANK

Lab Sample ID: MB-102511
LIMS ID: 11-23580
Matrix: Soil
Data Release Authorized:
Reported: 10/28/11

QC Report No: TS21-The Boeing Company
Project: NBF-LTST
025.082.311.001
Date Sampled: NA
Date Received: NA

Date Extracted: 10/25/11
Date Analyzed: 10/28/11 11:40
Instrument/Analyst: ECD7/AAR
GPC Cleanup: No
Sulfur Cleanup: Yes
Acid Cleanup: Yes
Florisil Cleanup: No

Sample Amount: 12.0 g
Final Extract Volume: 4.00 mL
Dilution Factor: 1.00
Silica Gel: No

Percent Moisture: NA

CAS Number	Analyte	RL	Result
12674-11-2	Aroclor 1016	33	< 33 U
53469-21-9	Aroclor 1242	33	< 33 U
12672-29-6	Aroclor 1248	33	< 33 U
11097-69-1	Aroclor 1254	33	< 33 U
11096-82-5	Aroclor 1260	33	< 33 U
11104-28-2	Aroclor 1221	33	< 33 U
11141-16-5	Aroclor 1232	33	< 33 U
37324-23-5	Aroclor 1262	33	< 33 U

Reported in µg/kg (ppb)

PCB Surrogate Recovery

Decachlorobiphenyl	93.0%
Tetrachlorometaxylene	79.8%

ANALYTICAL RESOURCES INCORPORATED

SW8082/PCB SOIL/SEDIMENT SURROGATE RECOVERY SUMMARY

Matrix: Soil

QC Report No: TS21-The Boeing Company
Project: NBF-LTST
025.082.311.001

Client ID	DCBP % REC	DCBP LCL-UCL	TCMX % REC	TCMX LCL-UCL	TOT OUT
MB-102511	93.0%	51-112	79.8%	46-111	0
LCS-102511	91.5%	51-112	85.8%	46-111	0
LCSD-102511	86.0%	51-112	80.2%	46-111	0
NBF-RRSS-A-101411	76.8%	42-127	82.8%	50-114	0

Microwave (MARS) Control Limits PCBSMI
Prep Method: SW3546
Log Number Range: 11-23580 to 11-23580

FORM-II SW8082

ANALYTICAL RESOURCES INCORPORATED

ORGANICS ANALYSIS DATA SHEET
PCB by GC/ECD Method SW8082

Sample ID: LCS-102511
LCS/LCSD

Lab Sample ID: LCS-102511
LIMS ID: 11-23580
Matrix: Soil
Data Release Authorized:
Reported: 10/28/11

QC Report No: TS21-The Boeing Company
Project: NBF-LTST
025.082.311.001
Date Sampled: NA
Date Received: NA

Date Extracted LCS/LCSD: 10/25/11

Date Analyzed LCS: 10/28/11 12:03
LCSD: 10/28/11 12:25
Instrument/Analyst LCS: ECD7/AAR
LCSD: ECD7/AAR
GPC Cleanup: No
Sulfur Cleanup: Yes
Acid Cleanup: Yes
Florisil Cleanup: No

Sample Amount LCS: 12.0 g-dry-wt
LCSD: 12.0 g-dry-wt
Final Extract Volume LCS: 4.00 mL
LCSD: 4.00 mL
Dilution Factor LCS: 1.00
LCSD: 1.00
Silica Gel: No

Percent Moisture: NA

Analyte	LCS	Spike Added-LCS	LCS Recovery	LCSD	Spike Added-LCSD	LCSD Recovery	RPD
Aroclor 1016	131	167	78.4%	128	167	76.6%	2.3%
Aroclor 1260	149	167	89.2%	142	167	85.0%	4.8%

PCB Surrogate Recovery

	LCS	LCSD
Decachlorobiphenyl	91.5%	86.0%
Tetrachlorometaxylene	85.8%	80.2%

Results reported in µg/kg (ppb)
RPD calculated using sample concentrations per SW846.

ORGANICS ANALYSIS DATA SHEET
TOTAL DIESEL RANGE HYDROCARBONS
NWTPHD by GC/FID
Page 1 of 1
Matrix: Soil

ANALYTICAL RESOURCES INCORPORATED

QC Report No: TS21-The Boeing Company
Project: NBF-LTST
025.082.311.001
Date Received: 10/14/11

Data Release Authorized:
Reported: 10/26/11

ARI ID	Sample ID	Extraction Date	Analysis Date	EFV DL	Range	RL	Result
MB-102111	Method Blank	10/21/11	10/26/11	1.00	Diesel	5.0	< 5.0 U
11-23580	HC ID: ---		FID3B	1.0	Motor Oil	10	< 10 U
					o-Terphenyl		96.3%
TS21A	NBF-RRSS-A-101411	10/21/11	10/26/11	1.00	**Diesel**	**5.9**	**7.8**
11-23580	HC ID: **DRO/MOTOR OIL**		FID3B	1.0	**Motor Oil**	**12**	**51**
					o-Terphenyl		86.2%

Reported in mg/kg (ppm)

EFV-Effective Final Volume in mL.
DL-Dilution of extract prior to analysis.
RL-Reporting limit.

Diesel quantitation on total peaks in the range from C12 to C24.
Motor Oil quantitation on total peaks in the range from C24 to C38.
HC ID: DRO/RRO indicates results of organics or additional hydrocarbons in ranges are not identifiable.

ANALYTICAL RESOURCES INCORPORATED

TPHD SURROGATE RECOVERY SUMMARY

Matrix: Soil

QC Report No: TS21-The Boeing Company
Project: NBF-LTST
025.082.311.001

Client ID	OTER	TOT OUT
102111MBS	96.3%	0
102111LCS	100%	0
102111LCSD	102%	0
NBF-RRSS-A-101411	86.2%	0

	LCS/MB LIMITS	QC LIMITS
(OTER) = o-Terphenyl	(50-150)	(50-150)

Prep Method: SW3546
Log Number Range: 11-23580 to 11-23580

FORM-II TPHD

ANALYTICAL RESOURCES INCORPORATED

ORGANICS ANALYSIS DATA SHEET
NWTPHD by GC/FID

Sample ID: LCS-102111
LCS/LCSD

Lab Sample ID: LCS-102111
LIMS ID: 11-23580
Matrix: Soil
Data Release Authorized:
Reported: 10/26/11

QC Report No: TS21-The Boeing Company
Project: NBF-LTST
025.082.311.001
Date Sampled: NA
Date Received: NA

Date Extracted LCS/LCSD: 10/21/11

Date Analyzed LCS: 10/26/11 02:37
LCSD: 10/26/11 02:59
Instrument/Analyst LCS: FID3B/MS
LCSD: FID3B/MS

Sample Amount LCS: 10.0 g-dry-wt
LCSD: 10.0 g-dry-wt
Final Extract Volume LCS: 1.0 mL
LCSD: 1.0 mL
Dilution Factor LCS: 1.00
LCSD: 1.00

Range	LCS	Spike Added-LCS	LCS Recovery	LCSD	Spike Added-LCSD	LCSD Recovery	RPD
Diesel	128	150	85.3%	128	150	85.3%	0.0%

TPHD Surrogate Recovery

	LCS	LCSD
o-Terphenyl	100%	102%

Results reported in mg/kg
RPD calculated using sample concentrations per SW846.

ANALYTICAL RESOURCES INCORPORATED

TOTAL DIESEL RANGE HYDROCARBONS-EXTRACTION REPORT

ARI Job: TS21
Project: NBF-LTST
025.082.311.001

Matrix: Soil
Date Received: 10/14/11

ARI ID	Client ID	Client Amt	Final Vol	Basis	Prep Date
11-23580-102111MB1	Method Blank	10.0 g	1.00 mL	-	10/21/11
11-23580-102111LCS1	Lab Control	10.0 g	1.00 mL	-	10/21/11
11-23580-102111LCSD1	Lab Control Dup	10.0 g	1.00 mL	-	10/21/11
11-23580-TS21A	NBF-RRSS-A-101411	8.48 g	1.00 mL	D	10/21/11

Basis: D=Dry Weight W=As Received

ANALYTICAL RESOURCES INCORPORATED

INORGANICS ANALYSIS DATA SHEET
TOTAL METALS

Sample ID: NBF-RRSS-A-101411
SAMPLE

Lab Sample ID: TS21A
LIMS ID: 11-23580
Matrix: Soil
Data Release Authorized:
Reported: 10/20/11

QC Report No: TS21-The Boeing Company
Project: NBF-LTST
025.082.311.001
Date Sampled: 10/14/11
Date Received: 10/14/11

Percent Total Solids: 86.4%

Prep Meth	Prep Date	Analysis Method	Analysis Date	CAS Number	Analyte	RL	mg/kg-dry	Q
3050B	10/18/11	6010B	10/19/11	**7440-38-2**	**Arsenic**	5	**5**	
3050B	10/18/11	6010B	10/19/11	7440-43-9	Cadmium	0.2	0.2	U
3050B	10/18/11	6010B	10/19/11	**7440-47-3**	**Chromium**	0.5	**14.3**	
3050B	10/18/11	6010B	10/19/11	**7439-92-1**	**Lead**	2	**9**	
CLP	10/18/11	7471A	10/20/11	**7439-97-6**	**Mercury**	0.02	**0.04**	

U-Analyte undetected at given RL
RL-Reporting Limit

ANALYTICAL RESOURCES INCORPORATED

INORGANICS ANALYSIS DATA SHEET
TOTAL METALS

Sample ID: METHOD BLANK

Lab Sample ID: TS21MB
LIMS ID: 11-23580
Matrix: Soil
Data Release Authorized:
Reported: 10/20/11

QC Report No: TS21-The Boeing Company
Project: NBF-LTST
025.082.311.001
Date Sampled: NA
Date Received: NA

Percent Total Solids: NA

Prep Meth	Prep Date	Analysis Method	Analysis Date	CAS Number	Analyte	RL	mg/kg-dry	Q
3050B	10/18/11	6010B	10/19/11	7440-38-2	Arsenic	5	5	U
3050B	10/18/11	6010B	10/19/11	7440-43-9	Cadmium	0.2	0.2	U
3050B	10/18/11	6010B	10/19/11	7440-47-3	Chromium	0.5	0.5	U
3050B	10/18/11	6010B	10/19/11	7439-92-1	Lead	2	2	U
CLP	10/18/11	7471A	10/20/11	7439-97-6	Mercury	0.02	0.02	U

U-Analyte undetected at given RL
RL-Reporting Limit

ANALYTICAL RESOURCES INCORPORATED

INORGANICS ANALYSIS DATA SHEET
TOTAL METALS

Sample ID: LAB CONTROL

Lab Sample ID: TS21LCS
LIMS ID: 11-23580
Matrix: Soil
Data Release Authorized:
Reported: 10/20/11

QC Report No: TS21-The Boeing Company
Project: NBF-LTST
025.082.311.001
Date Sampled: NA
Date Received: NA

BLANK SPIKE QUALITY CONTROL REPORT

Analyte	Analysis Method	Spike Found	Spike Added	% Recovery	Q
Arsenic	6010B	196	200	98.0%	
Cadmium	6010B	50.9	50.0	102%	
Chromium	6010B	49.7	50.0	99.4%	
Lead	6010B	191	200	95.5%	
Mercury	7471A	0.49	0.50	98.0%	

Reported in mg/kg-dry

N-Control limit not met
NA-Not Applicable, Analyte Not Spiked
Control Limits: 80-120%

ANALYTICAL RESOURCES INCORPORATED

ORGANICS ANALYSIS DATA SHEET
TPHG by Method NWTPHG
Matrix: Soil

Data Release Authorized:
Reported: 10/25/11

QC Report No: TS21-The Boeing Company
Project: NBF-LTST
Event: 025.082.311.001
Date Sampled: 10/14/11
Date Received: 10/14/11

ARI ID	Client ID	Analysis Date	Basis	Range	Result
MB-101911	Method Blank	10/19/11	Dry	Gasoline	< 5.0 U
11-23580		PID1		HC ID	---
				Trifluorotoluene	93.2%
				Bromobenzene	95.5%
TS21A	NBF-RRSS-A-101411	10/19/11	Dry	Gasoline	< 3.6 U
11-23580		PID1		HC ID	---
				Trifluorotoluene	92.0%
				Bromobenzene	90.3%

Gasoline values reported in mg/kg (ppm)

Quantitation on total peaks in the gasoline range from Toluene to Naphthalene.

GAS: Indicates the presence of gasoline or weathered gasoline.
GRO: Positive result that does not match an identifiable gasoline pattern.

Results corrected for soil moisture content per Section 11.10.5 of EPA Method 8000C.

ANALYTICAL RESOURCES INCORPORATED

TPHG SOIL SURROGATE RECOVERY SUMMARY

ARI Job: TS21
Matrix: Soil

QC Report No: TS21-The Boeing Company
Project: NBF-LTST
Event: 025.082.311.001

Client ID	BFB	TFT	BBZ	TOT OUT
MB-101911	NA	93.2%	95.5%	0
LCS-101911	NA	102%	99.4%	0
LCSD-101911	NA	103%	102%	0
NBF-RRSS-A-101411	NA	92.0%	90.3%	0

	LCS/MB LIMITS	QC LIMITS
(BFB) = Bromofluorobenzene	(70-130)	(70-130)
(TFT) = Trifluorotoluene	(80-120)	(66-123)
(BBZ) = Bromobenzene	(80-120)	(62-130)

Log Number Range: 11-23580 to 11-23580

FORM II TPHG

ANALYTICAL RESOURCES INCORPORATED

ORGANICS ANALYSIS DATA SHEET
TPHG by Method NWTPHG

Sample ID: LCS-101911
LAB CONTROL SAMPLE

Lab Sample ID: LCS-101911
LIMS ID: 11-23580
Matrix: Soil
Data Release Authorized:
Reported: 10/25/11

QC Report No: TS21-The Boeing Company
Project: NBF-LTST
Event: 025.082.311.001
Date Sampled: NA
Date Received: NA

Date Analyzed LCS: 10/19/11 07:26
LCSD: 10/19/11 07:55
Instrument/Analyst LCS: PID1/MH
LCSD: PID1/MH

Purge Volume: 5.0 mL

Sample Amount LCS: 100 mg-dry-wt
LCSD: 100 mg-dry-wt

Analyte	LCS	Spike Added-LCS	LCS Recovery	LCSD	Spike Added-LCSD	LCSD Recovery	RPD
Gasoline Range Hydrocarbons	52.6	50.0	105%	51.8	50.0	104%	1.5%

Reported in mg/kg (ppm)

RPD calculated using sample concentrations per SW846.

TPHG Surrogate Recovery

	LCS	LCSD
Trifluorotoluene	102%	103%
Bromobenzene	99.4%	102%

Analytical Resources, Incorporated
Analytical Chemists and Consultants

November 7, 2011

Jeremy Davis
Landau Associates, Inc.
130 Second Ave
Edmonds, WA 98020

RE: Project: NBF –RRSS 025082.411
ARI Job: TU98

Dear Jeremy:

Please find enclosed the Chain of Custody (COC) record, sample receipt documentation, and analytical results for the above referenced project. Analytical Resources, Inc. (ARI) accepted two soil samples in good condition on November 1, 2011. One cooler was received with a temperature of 0.9°C.

The samples were analyzed for PCBs, Total Metals, NWTPH-Gx and NWTPH-Dx, as requested on the COC.

There were no irregularities with the samples.

Quality control analysis results are included for your review. Copies of the reports and all associated raw data will be kept on file electronically at ARI. If you have any questions or require additional information, please contact me at your convenience.

Sincerely,
ANALYTICAL RESOURCES, INC

Kelly Bottem
Client Services Manager
(206) 695-6211
kellyb@arilabs.com
www.arilabs.com

cc: Carl Bach, The Boeing Company, P.O. Box 3707, M/S 1W-12, Seattle, WA 98124-2207

4611 South 134th Place, Suite 100 • Tukwila WA 98168 • **206-695-6200** • **206-695-6201** fax

☒ Seattle/Edmonds (425) 778-0907
☐ Tacoma (253) 926-2493
☐ Spokane (509) 327-9737
☐ Portland (503) 542-1080
☐

TU98

LANDAU ASSOCIATES

Date 11/1/11
Page 1 of 1

Chain-of-Custody Record

Project Name NBF-RASS
Project No. 025082.411
Project Location/Event SEATTLE, WA / RASS STOCKPILE SAMPLE
Sampler's Name DYLAN FRAZER
Project Contact JEREMY DAVIS
Send Results To ", CARL BACH

Turnaround Time
☒ Standard
☐ Accelerated
☐

Testing Parameters

Sample I.D.	Date	Time	Matrix	No. of Containers	PCBs	NWTPH-G	NWTPH-Dx	METALS*	Observations/Comments
~~NBF-RASS~~ (DF)									~~X Allow water samples to settle, collect aliquot from clear portion~~ (DF)
NBF-RASS-A-110111	11/1/11	1500	SOIL	2	X	X	X	X	~~X NWTPH-Dx - run acid wash/silica gel cleanup~~
NBF-RASS-B-110111	11/1/11	1435	SOIL	3	X	X	X	X	

___ run samples standardized to _____ product

___ Analyze for EPH if no specific product identified

VOC/BTEX/VPH (soil):
X non-preserved
___ preserved w/methanol
___ preserved w/sodium bisulfate
___ Freeze upon receipt

___ Dissolved metal water samples field filtered

Other X MTCA 5 METALS: ARSENIC, CADMIUM, CHROMIUM, LEAD, MERCURY

Special Shipment/Handling or Storage Requirements ON ICE

Method of Shipment DROP OFF

Relinquished by	Received by	Relinquished by	Received by
Signature: D	Signature: A. Volgardsen	Signature:	Signature:
Printed Name: DYLAN FRAZER	Printed Name:	Printed Name:	Printed Name:
Company: LANDAU	Company: ARI	Company:	Company:
Date: 11/1/11 Time: 1600	Date: 11/1/11 Time: 1600	Date: Time:	Date: Time:

WHITE COPY - Project File YELLOW COPY - Laboratory PINK COPY - Client Representative

Rev 8/09

Analytical Resources, Incorporated
Analytical Chemists and Consultants

Cooler Receipt Form

ARI Client Boeing

COC No(s) _____ (NA)

Assigned ARI Job No TU98

Project Name NBF-RRSS

Delivered by Fed-Ex UPS Courier Hand Delivered Other _____

Tracking No _____ (NA)

Preliminary Examination Phase:

Were intact, properly signed and dated custody seals attached to the outside of to cooler?	(YES)	NO
Were custody papers included with the cooler?	(YES)	NO
Were custody papers properly filled out (ink, signed, etc)	(YES)	NO
Temperature of Cooler(s) (°C) (recommended 2 0-6 0 °C for chemistry).	0.9	

If cooler temperature is out of compliance fill out form 00070F Temp Gun ID# 90941161 9

Cooler Accepted by AV Date 11/1/11 Time 1600

Complete custody forms and attach all shipping documents

Log-In Phase:

Was a temperature blank included in the cooler?		YES	(NO)
What kind of packing material was used? Bubble Wrap (Wet Ice) Gel Packs (Baggies) Foam Block Paper Other: _____			
Was sufficient ice used (if appropriate)?	NA	(YES)	NO
Were all bottles sealed in individual plastic bags?		(YES)	NO
Did all bottles arrive in good condition (unbroken)?		(YES)	NO
Were all bottle labels complete and legible?		(YES)	NO
Did the number of containers listed on COC match with the number of containers received?		(YES)	NO
Did all bottle labels and tags agree with custody papers?		(YES)	NO
Were all bottles used correct for the requested analyses?		(YES)	NO
Do any of the analyses (bottles) require preservation? (attach preservation sheet, excluding VOCs)	(NA)	YES	NO
Were all VOC vials free of air bubbles?	(NA)	YES	NO
Was sufficient amount of sample sent in each bottle?		(YES)	NO
Date VOC Trip Blank was made at ARI	(NA)	_____	

Was Sample Split by ARI (NA) YES Date/Time _____ Equipment: _____ Split by: _____

Samples Logged by AV Date: 11/2/11 Time: 1130

***** Notify Project Manager of discrepancies or concerns *****

Sample ID on Bottle	Sample ID on COC	Sample ID on Bottle	Sample ID on COC

Additional Notes, Discrepancies, & Resolutions:

By Date

Small Air Bubbles <2mm	Peabubbles 2-4 mm	LARGE Air Bubbles > 4 mm	
			Small → "sm"
			Peabubbles → "pb"
			Large → "lg"
			Headspace → "hs"

Sample ID Cross Reference Report

ANALYTICAL RESOURCES INCORPORATED

ARI Job No: TU98
Client: The Boeing Company
Project Event: 025082.411
Project Name: NBF-RRSS

	Sample ID	ARI Lab ID	ARI LIMS ID	Matrix	Sample Date/Time	VTSR
1.	NBF-RRSS-A-110111	TU98A	11-25328	Soil	11/01/11 15:00	11/01/11 16:00
2.	NBF-RRSS-B-110111	TU98B	11-25329	Soil	11/01/11 14:35	11/01/11 16:00

Printed 11/02/11

ANALYTICAL RESOURCES INCORPORATED

ORGANICS ANALYSIS DATA SHEET
PCB by GC/ECD Method SW8082

Sample ID: NBF-RRSS-A-110111
SAMPLE

Lab Sample ID: TU98A
LIMS ID: 11-25328
Matrix: Soil
Data Release Authorized:
Reported: 11/07/11

QC Report No: TU98-The Boeing Company
Project: NBF-RRSS
025082.411
Date Sampled: 11/01/11
Date Received: 11/01/11

Date Extracted: 11/04/11
Date Analyzed: 11/05/11 23:26
Instrument/Analyst: ECD7/JGR
GPC Cleanup: No
Sulfur Cleanup: Yes
Acid Cleanup: Yes
Florisil Cleanup: No

Sample Amount: 12.9 g-dry-wt
Final Extract Volume: 4.00 mL
Dilution Factor: 1.00
Silica Gel: No

Percent Moisture: 20.1%

CAS Number	Analyte	RL	Result
12674-11-2	Aroclor 1016	31	< 31 U
53469-21-9	Aroclor 1242	31	< 31 U
12672-29-6	Aroclor 1248	31	< 31 U
11097-69-1	Aroclor 1254	31	< 31 U
11096-82-5	Aroclor 1260	31	< 31 U
11104-28-2	Aroclor 1221	31	< 31 U
11141-16-5	Aroclor 1232	31	< 31 U
37324-23-5	Aroclor 1262	31	< 31 U

Reported in µg/kg (ppb)

PCB Surrogate Recovery

Decachlorobiphenyl	93.5%
Tetrachlorometaxylene	90.2%

ANALYTICAL RESOURCES INCORPORATED

ORGANICS ANALYSIS DATA SHEET
PCB by GC/ECD Method SW8082

Sample ID: NBF-RRSS-B-110111
SAMPLE

Lab Sample ID: TU98B
LIMS ID: 11-25329
Matrix: Soil
Data Release Authorized:
Reported: 11/07/11

QC Report No: TU98-The Boeing Company
Project: NBF-RRSS
025082.411
Date Sampled: 11/01/11
Date Received: 11/01/11

Date Extracted: 11/04/11
Date Analyzed: 11/07/11 10:48
Instrument/Analyst: ECD7/JGR
GPC Cleanup: No
Sulfur Cleanup: Yes
Acid Cleanup: Yes
Florisil Cleanup: No

Sample Amount: 13.0 g-dry-wt
Final Extract Volume: 4.00 mL
Dilution Factor: 5.00
Silica Gel: No

Percent Moisture: 7.9%

CAS Number	Analyte	RL	Result
12674-11-2	Aroclor 1016	150	< 150 U
53469-21-9	Aroclor 1242	150	< 150 U
12672-29-6	Aroclor 1248	150	< 150 U
11097-69-1	Aroclor 1254	150	< 150 U
11096-82-5	**Aroclor 1260**	**150**	**300**
11104-28-2	Aroclor 1221	150	< 150 U
11141-16-5	Aroclor 1232	150	< 150 U
37324-23-5	Aroclor 1262	150	< 150 U

Reported in µg/kg (ppb)

PCB Surrogate Recovery

Decachlorobiphenyl	73.4%
Tetrachlorometaxylene	74.2%

ANALYTICAL RESOURCES INCORPORATED

ORGANICS ANALYSIS DATA SHEET
PCB by GC/ECD Method SW8082

Sample ID: MB-110411
METHOD BLANK

Lab Sample ID: MB-110411
LIMS ID: 11-25328
Matrix: Soil
Data Release Authorized:
Reported: 11/07/11

QC Report No: TU98-The Boeing Company
Project: NBF-RRSS
025082.411
Date Sampled: NA
Date Received: NA

Date Extracted: 11/04/11
Date Analyzed: 11/05/11 22:17
Instrument/Analyst: ECD7/JGR
GPC Cleanup: No
Sulfur Cleanup: Yes
Acid Cleanup: Yes
Florisil Cleanup: No

Sample Amount: 12.0 g
Final Extract Volume: 4.00 mL
Dilution Factor: 1.00
Silica Gel: No

Percent Moisture: NA

CAS Number	Analyte	RL	Result
12674-11-2	Aroclor 1016	33	< 33 U
53469-21-9	Aroclor 1242	33	< 33 U
12672-29-6	Aroclor 1248	33	< 33 U
11097-69-1	Aroclor 1254	33	< 33 U
11096-82-5	Aroclor 1260	33	< 33 U
11104-28-2	Aroclor 1221	33	< 33 U
11141-16-5	Aroclor 1232	33	< 33 U
37324-23-5	Aroclor 1262	33	< 33 U

Reported in µg/kg (ppb)

PCB Surrogate Recovery

Decachlorobiphenyl	102%
Tetrachlorometaxylene	91.5%

ANALYTICAL RESOURCES INCORPORATED

SW8082/PCB SOIL/SEDIMENT SURROGATE RECOVERY SUMMARY

Matrix: Soil

QC Report No: TU98-The Boeing Company
Project: NBF-RRSS
025082.411

Client ID	DCBP % REC	DCBP LCL-UCL	TCMX % REC	TCMX LCL-UCL	TOT OUT
MB-110411	102%	51-112	91.5%	46-111	0
LCS-110411	102%	51-112	92.8%	46-111	0
LCSD-110411	102%	51-112	92.0%	46-111	0
NBF-RRSS-A-110111	93.5%	42-127	90.2%	50-114	0
NBF-RRSS-B-110111	73.4%	42-127	74.2%	50-114	0

Microwave (MARS) Control Limits PCBSMI
Prep Method: SW3546
Log Number Range: 11-25328 to 11-25329

FORM-II SW8082

ANALYTICAL RESOURCES INCORPORATED

ORGANICS ANALYSIS DATA SHEET
PCB by GC/ECD Method SW8082

Sample ID: LCS-110411
LCS/LCSD

Lab Sample ID: LCS-110411
LIMS ID: 11-25328
Matrix: Soil
Data Release Authorized:
Reported: 11/07/11

QC Report No: TU98-The Boeing Company
Project: NBF-RRSS
025082.411
Date Sampled: NA
Date Received: NA

Date Extracted LCS/LCSD: 11/04/11

Date Analyzed LCS: 11/05/11 22:40
LCSD: 11/05/11 23:03
Instrument/Analyst LCS: ECD7/JGR
LCSD: ECD7/JGR
GPC Cleanup: No
Sulfur Cleanup: Yes
Acid Cleanup: Yes
Florisil Cleanup: No

Sample Amount LCS: 12.0 g-dry-wt
LCSD: 12.0 g-dry-wt
Final Extract Volume LCS: 4.00 mL
LCSD: 4.00 mL
Dilution Factor LCS: 1.00
LCSD: 1.00
Silica Gel: No

Percent Moisture: NA

Analyte	LCS	Spike Added-LCS	LCS Recovery	LCSD	Spike Added-LCSD	LCSD Recovery	RPD
Aroclor 1016	146	167	87.4%	143	167	85.6%	2.1%
Aroclor 1260	165	167	98.8%	164	167	98.2%	0.6%

PCB Surrogate Recovery

	LCS	LCSD
Decachlorobiphenyl	102%	102%
Tetrachlorometaxylene	92.8%	92.0%

Results reported in µg/kg (ppb)
RPD calculated using sample concentrations per SW846.

ANALYTICAL RESOURCES INCORPORATED

ORGANICS ANALYSIS DATA SHEET
TPHG by Method NWTPHG
Matrix: Soil

Data Release Authorized:
Reported: 11/04/11

QC Report No: TU98-The Boeing Company
Project: NBF-RRSS
Event: 025082.411
Date Sampled: 11/01/11
Date Received: 11/01/11

ARI ID	Client ID	Analysis Date	Basis	Range	Result
MB-110311	Method Blank	11/03/11	Dry	Gasoline	< 5.0 U
11-25328		PID1		HC ID	---
				Trifluorotoluene	94.4%
				Bromobenzene	95.2%
TU98A	NBF-RRSS-A-110111	11/03/11	Dry	Gasoline	< 8.6 U
11-25328		PID1		HC ID	---
				Trifluorotoluene	91.1%
				Bromobenzene	90.0%
TU98B	NBF-RRSS-B-110111	11/03/11	Dry	Gasoline	< 6.0 U
11-25329		PID1		HC ID	---
				Trifluorotoluene	80.8%
				Bromobenzene	79.5%

Gasoline values reported in mg/kg (ppm)

Quantitation on total peaks in the gasoline range from Toluene to Naphthalene.

GAS: Indicates the presence of gasoline or weathered gasoline.
GRO: Positive result that does not match an identifiable gasoline pattern.

Results corrected for soil moisture content per Section 11.10.5 of EPA Method 8000C.

ANALYTICAL RESOURCES INCORPORATED

TPHG SOIL SURROGATE RECOVERY SUMMARY

ARI Job: TU98
Matrix: Soil

QC Report No: TU98-The Boeing Company
Project: NBF-RRSS
Event: 025082.411

Client ID	BFB	TFT	BBZ	TOT OUT
MB-110311	NA	94.4%	95.2%	0
LCS-110311	NA	89.2%	89.0%	0
LCSD-110311	NA	98.3%	97.5%	0
NBF-RRSS-A-110111	NA	91.1%	90.0%	0
NBF-RRSS-B-110111	NA	80.8%	79.5%	0

	LCS/MB LIMITS	QC LIMITS
(BFB) = Bromofluorobenzene	(70-130)	(70-130)
(TFT) = Trifluorotoluene	(80-120)	(66-123)
(BBZ) = Bromobenzene	(80-120)	(62-130)

Log Number Range: 11-25328 to 11-25329

FORM II TPHG

ANALYTICAL RESOURCES INCORPORATED

ORGANICS ANALYSIS DATA SHEET
TPHG by Method NWTPHG

Sample ID: LCS-110311
LAB CONTROL SAMPLE

Lab Sample ID: LCS-110311
LIMS ID: 11-25328
Matrix: Soil
Data Release Authorized:
Reported: 11/04/11

QC Report No: TU98-The Boeing Company
Project: NBF-RRSS
Event: 025082.411
Date Sampled: NA
Date Received: NA

Date Analyzed LCS: 11/03/11 07:02
LCSD: 11/03/11 07:31
Instrument/Analyst LCS: PID1/MH
LCSD: PID1/MH

Purge Volume: 5.0 mL

Sample Amount LCS: 100 mg-dry-wt
LCSD: 100 mg-dry-wt

Analyte	LCS	Spike Added-LCS	LCS Recovery	LCSD	Spike Added-LCSD	LCSD Recovery	RPD
Gasoline Range Hydrocarbons	51.6	50.0	103%	50.7	50.0	101%	1.8%

Reported in mg/kg (ppm)

RPD calculated using sample concentrations per SW846.

TPHG Surrogate Recovery

	LCS	LCSD
Trifluorotoluene	89.2%	98.3%
Bromobenzene	89.0%	97.5%

ORGANICS ANALYSIS DATA SHEET
TOTAL DIESEL RANGE HYDROCARBONS
NWTPHD by GC/FID
Page 1 of 1
Matrix: Soil

ANALYTICAL RESOURCES INCORPORATED

QC Report No: TU98-The Boeing Company
Project: NBF-RRSS
025082.411
Date Received: 11/01/11

Data Release Authorized:
Reported: 11/04/11

ARI ID	Sample ID	Extraction Date	Analysis Date	EFV DL	Range	RL	Result
MB-110311	Method Blank	11/03/11	11/03/11	1.00	Diesel	5.0	< 5.0 U
11-25328	HC ID: ---		FID3B	1.0	Motor Oil	10	< 10 U
					o-Terphenyl		92.2%
TU98A	NBF-RRSS-A-110111	11/03/11	11/03/11	1.00	**Diesel**	**6.2**	**16**
11-25328	HC ID: **DRO/MOTOR OIL**		FID3B	1.0	**Motor Oil**	**12**	**54**
					o-Terphenyl		88.1%
TU98B	NBF-RRSS-B-110111	11/03/11	11/03/11	1.00	**Diesel**	**5.3**	**50**
11-25329	HC ID: **DRO/MOTOR OIL**		FID3B	1.0	**Motor Oil**	**11**	**340**
					o-Terphenyl		86.6%

Reported in mg/kg (ppm)

EFV-Effective Final Volume in mL.
DL-Dilution of extract prior to analysis.
RL-Reporting limit.

Diesel quantitation on total peaks in the range from C12 to C24.
Motor Oil quantitation on total peaks in the range from C24 to C38.
HC ID: DRO/RRO indicates results of organics or additional hydrocarbons in ranges are not identifiable.

ANALYTICAL RESOURCES INCORPORATED

TPHD SURROGATE RECOVERY SUMMARY

Matrix: Soil

QC Report No: TU98-The Boeing Company
Project: NBF-RRSS
025082.411

Client ID	OTER	TOT OUT
110311MBS	92.2%	0
110311LCS	98.0%	0
110311LCSD	98.2%	0
NBF-RRSS-A-110111	88.1%	0
NBF-RRSS-B-110111	86.6%	0

	LCS/MB LIMITS	QC LIMITS
(OTER) = o-Terphenyl	(50-150)	(50-150)

Prep Method: SW3546
Log Number Range: 11-25328 to 11-25329

FORM-II TPHD

ANALYTICAL RESOURCES INCORPORATED

ORGANICS ANALYSIS DATA SHEET
NWTPHD by GC/FID

Sample ID: LCS-110311
LCS/LCSD

Lab Sample ID: LCS-110311
LIMS ID: 11-25328
Matrix: Soil
Data Release Authorized:
Reported: 11/04/11

QC Report No: TU98-The Boeing Company
Project: NBF-RRSS
025082.411
Date Sampled: NA
Date Received: NA

Date Extracted LCS/LCSD: 11/03/11

Date Analyzed LCS: 11/03/11 22:41
LCSD: 11/03/11 23:03
Instrument/Analyst LCS: FID3B/MS
LCSD: FID3B/MS

Sample Amount LCS: 10.0 g-dry-wt
LCSD: 10.0 g-dry-wt
Final Extract Volume LCS: 1.0 mL
LCSD: 1.0 mL
Dilution Factor LCS: 1.00
LCSD: 1.00

Range	LCS	Spike Added-LCS	LCS Recovery	LCSD	Spike Added-LCSD	LCSD Recovery	RPD
Diesel	135	150	90.0%	134	150	89.3%	0.7%

TPHD Surrogate Recovery

	LCS	LCSD
o-Terphenyl	98.0%	98.2%

Results reported in mg/kg
RPD calculated using sample concentrations per SW846.

ANALYTICAL RESOURCES INCORPORATED

TOTAL DIESEL RANGE HYDROCARBONS-EXTRACTION REPORT

ARI Job: TU98
Project: NBF-RRSS
025082.411

Matrix: Soil
Date Received: 11/01/11

ARI ID	Client ID	Client Amt	Final Vol	Basis	Prep Date
11-25328-110311MB1	Method Blank	10.0 g	1.00 mL	-	11/03/11
11-25328-110311LCS1	Lab Control	10.0 g	1.00 mL	-	11/03/11
11-25328-110311LCSD1	Lab Control Dup	10.0 g	1.00 mL	-	11/03/11
11-25328-TU98A	NBF-RRSS-A-110111	8.09 g	1.00 mL	D	11/03/11
11-25329-TU98B	NBF-RRSS-B-110111	9.40 g	1.00 mL	D	11/03/11

Basis: D=Dry Weight W=As Received

ANALYTICAL RESOURCES INCORPORATED

INORGANICS ANALYSIS DATA SHEET
TOTAL METALS

Sample ID: NBF-RRSS-A-110111
SAMPLE

Lab Sample ID: TU98A
LIMS ID: 11-25328
Matrix: Soil
Data Release Authorized:
Reported: 11/07/11

QC Report No: TU98-The Boeing Company
Project: NBF-RRSS
025082.411
Date Sampled: 11/01/11
Date Received: 11/01/11

Percent Total Solids: 80.0%

Prep Meth	Prep Date	Analysis Method	Analysis Date	CAS Number	Analyte	RL	mg/kg-dry	Q
3050B	11/03/11	6010B	11/04/11	7440-38-2	Arsenic	6	6	U
3050B	11/03/11	6010B	11/04/11	7440-43-9	Cadmium	0.2	0.2	U
3050B	11/03/11	6010B	11/04/11	**7440-47-3**	**Chromium**	0.6	**12.1**	
3050B	11/03/11	6010B	11/04/11	**7439-92-1**	**Lead**	2	**12**	
CLP	11/03/11	7471A	11/03/11	**7439-97-6**	**Mercury**	0.02	**0.05**	

U-Analyte undetected at given RL
RL-Reporting Limit

ANALYTICAL RESOURCES INCORPORATED

INORGANICS ANALYSIS DATA SHEET
TOTAL METALS

Sample ID: NBF-RRSS-A-110111
DUPLICATE

Lab Sample ID: TU98A
LIMS ID: 11-25328
Matrix: Soil
Data Release Authorized:
Reported: 11/07/11

QC Report No: TU98-The Boeing Company
Project: NBF-RRSS
025082.411
Date Sampled: 11/01/11
Date Received: 11/01/11

MATRIX DUPLICATE QUALITY CONTROL REPORT

Analyte	Analysis Method	Sample	Duplicate	RPD	Control Limit	Q
Arsenic	6010B	6 U	6 U	0.0%	+/- 6	L
Cadmium	6010B	0.2 U	0.2 U	0.0%	+/- 0.2	L
Chromium	6010B	12.1	12.9	6.4%	+/- 20%	
Lead	6010B	12	12	0.0%	+/- 2	L
Mercury	7471A	0.05	0.04	22.2%	+/- 0.02	L

Reported in mg/kg-dry

*-Control Limit Not Met
L-RPD Invalid, Limit = Detection Limit

ANALYTICAL RESOURCES INCORPORATED

INORGANICS ANALYSIS DATA SHEET
TOTAL METALS

Sample ID: NBF-RRSS-A-110111
MATRIX SPIKE

Lab Sample ID: TU98A
LIMS ID: 11-25328
Matrix: Soil
Data Release Authorized:
Reported: 11/07/11

QC Report No: TU98-The Boeing Company
Project: NBF-RRSS
025082.411
Date Sampled: 11/01/11
Date Received: 11/01/11

MATRIX SPIKE QUALITY CONTROL REPORT

Analyte	Analysis Method	Sample	Spike	Spike Added	% Recovery	Q
Arsenic	6010B	6 U	245	247	99.2%	
Cadmium	6010B	0.2 U	66.0	61.9	107%	
Chromium	6010B	12.1	75.5	61.9	102%	
Lead	6010B	12	259	247	100%	
Mercury	7471A	0.05	0.28	0.247	93.1%	

Reported in mg/kg-dry

N-Control Limit Not Met
H-% Recovery Not Applicable, Sample Concentration Too High
NA-Not Applicable, Analyte Not Spiked

Percent Recovery Limits: 75-125%

ANALYTICAL RESOURCES INCORPORATED

INORGANICS ANALYSIS DATA SHEET
TOTAL METALS

Sample ID: NBF-RRSS-B-110111
SAMPLE

Lab Sample ID: TU98B
LIMS ID: 11-25329
Matrix: Soil
Data Release Authorized:
Reported: 11/07/11

QC Report No: TU98-The Boeing Company
Project: NBF-RRSS
025082.411
Date Sampled: 11/01/11
Date Received: 11/01/11

Percent Total Solids: 91.3%

Prep Meth	Prep Date	Analysis Method	Analysis Date	CAS Number	Analyte	RL	mg/kg-dry	Q
3050B	11/03/11	6010B	11/04/11	7440-38-2	Arsenic	5	5	U
3050B	11/03/11	6010B	11/04/11	7440-43-9	Cadmium	0.2	0.2	U
3050B	11/03/11	6010B	11/04/11	**7440-47-3**	**Chromium**	0.5	**13.3**	
3050B	11/03/11	6010B	11/04/11	**7439-92-1**	**Lead**	2	**12**	
CLP	11/03/11	7471A	11/03/11	**7439-97-6**	**Mercury**	0.02	**0.03**	

U-Analyte undetected at given RL
RL-Reporting Limit

ANALYTICAL RESOURCES INCORPORATED

INORGANICS ANALYSIS DATA SHEET
TOTAL METALS

Sample ID: METHOD BLANK

Lab Sample ID: TU98MB
LIMS ID: 11-25329
Matrix: Soil
Data Release Authorized:
Reported: 11/07/11

QC Report No: TU98-The Boeing Company
Project: NBF-RRSS
025082.411
Date Sampled: NA
Date Received: NA

Percent Total Solids: NA

Prep Meth	Prep Date	Analysis Method	Analysis Date	CAS Number	Analyte	RL	mg/kg-dry	Q
3050B	11/03/11	6010B	11/04/11	7440-38-2	Arsenic	5	5	U
3050B	11/03/11	6010B	11/04/11	7440-43-9	Cadmium	0.2	0.2	U
3050B	11/03/11	6010B	11/04/11	7440-47-3	Chromium	0.5	0.5	U
3050B	11/03/11	6010B	11/04/11	7439-92-1	Lead	2	2	U
CLP	11/03/11	7471A	11/03/11	7439-97-6	Mercury	0.02	0.02	U

U-Analyte undetected at given RL
RL-Reporting Limit

ANALYTICAL RESOURCES INCORPORATED

INORGANICS ANALYSIS DATA SHEET
TOTAL METALS

Sample ID: LAB CONTROL

Lab Sample ID: TU98LCS
LIMS ID: 11-25329
Matrix: Soil
Data Release Authorized:
Reported: 11/07/11

QC Report No: TU98-The Boeing Company
Project: NBF-RRSS
025082.411
Date Sampled: NA
Date Received: NA

BLANK SPIKE QUALITY CONTROL REPORT

Analyte	Analysis Method	Spike Found	Spike Added	% Recovery	Q
Arsenic	6010B	202	200	101%	
Cadmium	6010B	52.9	50.0	106%	
Chromium	6010B	52.1	50.0	104%	
Lead	6010B	204	200	102%	
Mercury	7471A	0.56	0.50	112%	

Reported in mg/kg-dry

N-Control limit not met
NA-Not Applicable, Analyte Not Spiked
Control Limits: 80-120%

Analytical Resources, Incorporated
Analytical Chemists and Consultants

October 10, 2011

Jeremy Davis
Landau Associates, Inc.
130 Second Ave
Edmonds, WA 98020

RE: Project: NBF – RRSS 025.082.311.001
ARI Job: TO44

Dear Jeremy:

Please find enclosed the Chain of Custody (COC) record, sample receipt documentation, and analytical results for the above referenced project. Analytical Resources, Inc. (ARI) accepted one soil sample in good condition on September 27, 2011. One cooler was received with a temperature of 1.6°C.

The sample was analyzed for PCBs, VOCs, NWTPH-Dx, pH, NWTPH-Gx and Total Metals, as requested on the COC.

The VOCs CCAL is out of control high for all associated FORM III "Q" flagged analytes. All associated samples that contain analyte have been flagged with a "Q" qualifier.

There were no other irregularities with the samples.

Quality control analysis results are included for your review. Copies of the reports and all associated raw data will be kept on file electronically at ARI. If you have any questions or require additional information, please contact me at your convenience.

Sincerely,
ANALYTICAL RESOURCES, INC

Kelly Bottem
Client Services Manager
(206) 695-6211
kellyb@arilabs.com
www.arilabs.com

cc: Carl Bach, The Boeing Company, P.O. Box 3707, M/S 1W-12, Seattle, WA 98124-2207

4611 South 134th Place, Suite 100 • Tukwila WA 98168 • **206-695-6200** • **206-695-6201** fax

LANDAU ASSOCIATES

☒ Seattle/Edmonds (425) 778-0907
☐ Tacoma (253) 926-2493
☐ Spokane (509) 327-9737
☐ Portland (503) 542-1080
☐ _____

TO LAI

Date 9/27/11
Page 1 of 1

Chain-of-Custody Record

Project Name NBF-RRSS
Project No. 025.082.311.001
Project Location/Event NBF-RRSS
Sampler's Name Jeremy Davis
Project Contact _____
Send Results To _____

Turnaround Time
☒ Standard
☐ Accelerated
☐ _____

Testing Parameters

Sample I.D.	Date	Time	Matrix	No. of Containers	PCBs	NWTPH-Dx	NWTPH-Gx	METALS ★	VOCs	pH	Observations/Comments
NBF-RRSS-A-092711	9.27.11	1140	S	2	X	X	X	X	X	X	

~~X Allow water samples to settle, collect aliquot from clear portion~~ NA - JMD
~~X NWTPH-Dx - run acid wash/silica gel cleanup~~ NOT NEC. - JMD
___ run samples standardized to _____ product
___ Analyze for EPH if no specific product identified
VOC/BTEX/VPH (soil):
___ non-preserved
___ preserved w/methanol
___ preserved w/sodium bisulfate
___ Freeze upon receipt
___ Dissolved metal water samples field filtered
Other ★ MTCA-5: Arsenic, Cadmium, Chromium, LEAD, MERCURY

Special Shipment/Handling or Storage Requirements Cooler w/ ice
Method of Shipment Drop-off @ ARI

Relinquished by	Received by	Relinquished by	Received by
Signature	Signature	Signature	Signature
Printed Name Jeremy Davis	Printed Name A. Volgardsen	Printed Name	Printed Name
Company LAI	Company ARI	Company	Company
Date 9/27/11 Time 1346	Date 9/27/11 Time 1346	Date ___ Time ___	Date ___ Time ___

WHITE COPY - Project File YELLOW COPY - Laboratory PINK COPY - Client Representative

Rev 8/09

Sample ID Cross Reference Report

ANALYTICAL RESOURCES INCORPORATED

ARI Job No: TO44
Client: The Boeing Company
Project Event: N/A
Project Name: NBF-RRSS

	Sample ID	ARI Lab ID	ARI LIMS ID	Matrix	Sample Date/Time	VTSR
1.	NBF-RRSS-A-092711	TO44A	11-21302	Soil	09/27/11 11:40	09/27/11 13:45

Printed 09/27/11

Analytical Resources, Incorporated
Analytical Chemists and Consultants

Cooler Receipt Form

ARI Client: Boeing

COC No(s): _____ (NA)

Assigned ARI Job No: 70-111

Project Name: NBF-KRSS

Delivered by: Fed-Ex UPS Courier Hand Delivered Other: _____

Tracking No: _____ (NA)

Preliminary Examination Phase:

Were intact, properly signed and dated custody seals attached to the outside of to cooler? YES AV NO

Were custody papers included with the cooler? ..... YES NO

Were custody papers properly filled out (ink, signed, etc.) ..... YES NO

Temperature of Cooler(s) (°C) (recommended 2.0-6.0 °C for chemistry)..... 1.6 ___ ___ ___ ___ ___

If cooler temperature is out of compliance fill out form 00070F

Temp Gun ID#: 90941619

Cooler Accepted by: AV Date: 9/27/11 Time: 1345

Complete custody forms and attach all shipping documents

Log-In Phase:

Was a temperature blank included in the cooler? ..... YES NO

What kind of packing material was used? ... Bubble Wrap Wet Ice Gel Packs Baggies Foam Block Paper Other: _____

Was sufficient ice used (if appropriate)? ..... NA YES NO

Were all bottles sealed in individual plastic bags? ..... YES NO

Did all bottles arrive in good condition (unbroken)? ..... YES NO

Were all bottle labels complete and legible? ..... YES NO

Did the number of containers listed on COC match with the number of containers received? ..... YES NO

Did all bottle labels and tags agree with custody papers? ..... YES NO

Were all bottles used correct for the requested analyses? ..... YES NO

Do any of the analyses (bottles) require preservation? (attach preservation sheet, excluding VOCs)... NA YES NO

Were all VOC vials free of air bubbles? ..... NA YES NO

Was sufficient amount of sample sent in each bottle? ..... YES NO

Date VOC Trip Blank was made at ARI..... NA _____

Was Sample Split by ARI : NA YES Date/Time: _____ Equipment: _____ Split by: _____

Samples Logged by: TS Date: 9-27-11 Time: 1511

***** Notify Project Manager of discrepancies or concerns *****

Sample ID on Bottle	Sample ID on COC	Sample ID on Bottle	Sample ID on COC

Additional Notes, Discrepancies, & Resolutions:

By: Date:

Small → "sm"	
Peabubbles → "pb"	
Large → "lg"	
Headspace → "hs"	

ANALYTICAL RESOURCES INCORPORATED

ORGANICS ANALYSIS DATA SHEET
Volatiles by Purge & Trap GC/MS-Method SW8260C **Sample ID: NBF-RRSS-A-092711**
 SAMPLE

Lab Sample ID: TO44A
LIMS ID: 11-21302
Matrix: Soil
Data Release Authorized: WS
Reported: 10/07/11

QC Report No: TO44-The Boeing Company
Project: NBF-RRSS

Date Sampled: 09/27/11
Date Received: 09/27/11

Instrument/Analyst: NT9/PAB
Date Analyzed: 10/05/11 15:19

Sample Amount: 4.18 g-dry-wt
Purge Volume: 5.0 mL
Moisture: 19.7%

CAS Number	Analyte	RL	Result	Q
74-87-3	Chloromethane	1.2	< 1.2	U
74-83-9	Bromomethane	1.2	< 1.2	U
75-01-4	Vinyl Chloride	1.2	< 1.2	U
75-00-3	Chloroethane	1.2	< 1.2	U
75-09-2	Methylene Chloride	2.4	< 2.4	U
67-64-1	Acetone	6.0	< 6.0	U
75-15-0	Carbon Disulfide	1.2	< 1.2	U
75-35-4	1,1-Dichloroethene	1.2	< 1.2	U
75-34-3	1,1-Dichloroethane	1.2	< 1.2	U
156-60-5	trans-1,2-Dichloroethene	1.2	< 1.2	U
156-59-2	cis-1,2-Dichloroethene	1.2	< 1.2	U
67-66-3	Chloroform	1.2	< 1.2	U
107-06-2	1,2-Dichloroethane	1.2	< 1.2	U
78-93-3	2-Butanone	6.0	< 6.0	U
71-55-6	1,1,1-Trichloroethane	1.2	< 1.2	U
56-23-5	Carbon Tetrachloride	1.2	< 1.2	U
108-05-4	Vinyl Acetate	6.0	< 6.0	U
75-27-4	Bromodichloromethane	1.2	< 1.2	U
78-87-5	1,2-Dichloropropane	1.2	< 1.2	U
10061-01-5	cis-1,3-Dichloropropene	1.2	< 1.2	U
79-01-6	Trichloroethene	1.2	< 1.2	U
124-48-1	Dibromochloromethane	1.2	< 1.2	U
79-00-5	1,1,2-Trichloroethane	1.2	< 1.2	U
71-43-2	Benzene	1.2	< 1.2	U
10061-02-6	trans-1,3-Dichloropropene	1.2	< 1.2	U
110-75-8	2-Chloroethylvinylether	6.0	< 6.0	U
75-25-2	Bromoform	1.2	< 1.2	U
108-10-1	4-Methyl-2-Pentanone (MIBK)	6.0	< 6.0	U
591-78-6	2-Hexanone	6.0	< 6.0	U
127-18-4	Tetrachloroethene	1.2	< 1.2	U
79-34-5	1,1,2,2-Tetrachloroethane	1.2	< 1.2	U
108-88-3	Toluene	1.2	< 1.2	U
108-90-7	Chlorobenzene	1.2	< 1.2	U
100-41-4	Ethylbenzene	1.2	< 1.2	U
100-42-5	Styrene	1.2	< 1.2	U
75-69-4	Trichlorofluoromethane	1.2	< 1.2	U

ANALYTICAL RESOURCES INCORPORATED

ORGANICS ANALYSIS DATA SHEET
Volatiles by Purge & Trap GC/MS-Method SW8260C **Sample ID: NBF-RRSS-A-092711**
 SAMPLE

Lab Sample ID: TO44A
LIMS ID: 11-21302
Matrix: Soil
Date Analyzed: 10/05/11 15:19

QC Report No: TO44-The Boeing Company
Project: NBF-RRSS

CAS Number	Analyte	RL	Result	Q
76-13-1	1,1,2-Trichloro-1,2,2-trifluoroe	2.4	< 2.4	U
179601-23-1	m,p-Xylene	1.2	< 1.2	U
95-47-6	o-Xylene	1.2	< 1.2	U
95-50-1	1,2-Dichlorobenzene	1.2	< 1.2	U
541-73-1	1,3-Dichlorobenzene	1.2	< 1.2	U
106-46-7	1,4-Dichlorobenzene	1.2	< 1.2	U
107-02-8	Acrolein	60	< 60	U
74-88-4	Methyl Iodide	1.2	< 1.2	U
74-96-4	Bromoethane	2.4	< 2.4	U
107-13-1	Acrylonitrile	6.0	< 6.0	U
563-58-6	1,1-Dichloropropene	1.2	< 1.2	U
74-95-3	Dibromomethane	1.2	< 1.2	U
630-20-6	1,1,1,2-Tetrachloroethane	1.2	< 1.2	U
96-12-8	1,2-Dibromo-3-chloropropane	6.0	< 6.0	U
96-18-4	1,2,3-Trichloropropane	2.4	< 2.4	U
110-57-6	trans-1,4-Dichloro-2-butene	6.0	< 6.0	U
108-67-8	1,3,5-Trimethylbenzene	1.2	< 1.2	U
95-63-6	1,2,4-Trimethylbenzene	1.2	< 1.2	U
87-68-3	Hexachlorobutadiene	6.0	< 6.0	U
106-93-4	Ethylene Dibromide	1.2	< 1.2	U
74-97-5	Bromochloromethane	1.2	< 1.2	U
594-20-7	2,2-Dichloropropane	1.2	< 1.2	U
142-28-9	1,3-Dichloropropane	1.2	< 1.2	U
98-82-8	Isopropylbenzene	1.2	< 1.2	U
103-65-1	n-Propylbenzene	1.2	< 1.2	U
108-86-1	Bromobenzene	1.2	< 1.2	U
95-49-8	2-Chlorotoluene	1.2	< 1.2	U
106-43-4	4-Chlorotoluene	1.2	< 1.2	U
98-06-6	tert-Butylbenzene	1.2	< 1.2	U
135-98-8	sec-Butylbenzene	1.2	< 1.2	U
99-87-6	4-Isopropyltoluene	1.2	< 1.2	U
104-51-8	n-Butylbenzene	1.2	< 1.2	U
120-82-1	1,2,4-Trichlorobenzene	6.0	< 6.0	U
91-20-3	Naphthalene	6.0	< 6.0	U
87-61-6	1,2,3-Trichlorobenzene	6.0	< 6.0	U

Reported in µg/kg (ppb)

Volatile Surrogate Recovery

d4-1,2-Dichloroethane	100%
d8-Toluene	98.9%
Bromofluorobenzene	98.1%
d4-1,2-Dichlorobenzene	99.7%

ANALYTICAL RESOURCES INCORPORATED

ORGANICS ANALYSIS DATA SHEET
Volatiles by Purge & Trap GC/MS-Method SW8260C **Sample ID: MB-100511**
 METHOD BLANK

Lab Sample ID: MB-100511
LIMS ID: 11-21302
Matrix: Soil
Data Release Authorized: VB
Reported: 10/07/11

QC Report No: TO44-The Boeing Company
Project: NBF-RRSS

Date Sampled: NA
Date Received: NA

Instrument/Analyst: NT9/PAB
Date Analyzed: 10/05/11 10:44

Sample Amount: 5.00 g-dry-wt
Purge Volume: 5.0 mL
Moisture: NA

CAS Number	Analyte	RL	Result	Q
74-87-3	Chloromethane	1.0	< 1.0	U
74-83-9	Bromomethane	1.0	< 1.0	U
75-01-4	Vinyl Chloride	1.0	< 1.0	U
75-00-3	Chloroethane	1.0	< 1.0	U
75-09-2	Methylene Chloride	2.0	< 2.0	U
67-64-1	Acetone	5.0	< 5.0	U
75-15-0	Carbon Disulfide	1.0	< 1.0	U
75-35-4	1,1-Dichloroethene	1.0	< 1.0	U
75-34-3	1,1-Dichloroethane	1.0	< 1.0	U
156-60-5	trans-1,2-Dichloroethene	1.0	< 1.0	U
156-59-2	cis-1,2-Dichloroethene	1.0	< 1.0	U
67-66-3	Chloroform	1.0	< 1.0	U
107-06-2	1,2-Dichloroethane	1.0	< 1.0	U
78-93-3	2-Butanone	5.0	< 5.0	U
71-55-6	1,1,1-Trichloroethane	1.0	< 1.0	U
56-23-5	Carbon Tetrachloride	1.0	< 1.0	U
108-05-4	Vinyl Acetate	5.0	< 5.0	U
75-27-4	Bromodichloromethane	1.0	< 1.0	U
78-87-5	1,2-Dichloropropane	1.0	< 1.0	U
10061-01-5	cis-1,3-Dichloropropene	1.0	< 1.0	U
79-01-6	Trichloroethene	1.0	< 1.0	U
124-48-1	Dibromochloromethane	1.0	< 1.0	U
79-00-5	1,1,2-Trichloroethane	1.0	< 1.0	U
71-43-2	Benzene	1.0	< 1.0	U
10061-02-6	trans-1,3-Dichloropropene	1.0	< 1.0	U
110-75-8	2-Chloroethylvinylether	5.0	< 5.0	U
75-25-2	Bromoform	1.0	< 1.0	U
108-10-1	4-Methyl-2-Pentanone (MIBK)	5.0	< 5.0	U
591-78-6	2-Hexanone	5.0	< 5.0	U
127-18-4	Tetrachloroethene	1.0	< 1.0	U
79-34-5	1,1,2,2-Tetrachloroethane	1.0	< 1.0	U
108-88-3	Toluene	1.0	< 1.0	U
108-90-7	Chlorobenzene	1.0	< 1.0	U
100-41-4	Ethylbenzene	1.0	< 1.0	U
100-42-5	Styrene	1.0	< 1.0	U
75-69-4	Trichlorofluoromethane	1.0	< 1.0	U

ANALYTICAL RESOURCES INCORPORATED

ORGANICS ANALYSIS DATA SHEET
Volatiles by Purge & Trap GC/MS-Method SW8260C **Sample ID: MB-100511**
 METHOD BLANK

Lab Sample ID: MB-100511 QC Report No: TO44-The Boeing Company
LIMS ID: 11-21302 Project: NBF-RRSS
Matrix: Soil
Date Analyzed: 10/05/11 10:44

CAS Number	Analyte	RL	Result	Q
76-13-1	1,1,2-Trichloro-1,2,2-trifluoroe	2.0	< 2.0	U
179601-23-1	m,p-Xylene	1.0	< 1.0	U
95-47-6	o-Xylene	1.0	< 1.0	U
95-50-1	1,2-Dichlorobenzene	1.0	< 1.0	U
541-73-1	1,3-Dichlorobenzene	1.0	< 1.0	U
106-46-7	1,4-Dichlorobenzene	1.0	< 1.0	U
107-02-8	Acrolein	50	< 50	U
74-88-4	Methyl Iodide	1.0	< 1.0	U
74-96-4	Bromoethane	2.0	< 2.0	U
107-13-1	Acrylonitrile	5.0	< 5.0	U
563-58-6	1,1-Dichloropropene	1.0	< 1.0	U
74-95-3	Dibromomethane	1.0	< 1.0	U
630-20-6	1,1,1,2-Tetrachloroethane	1.0	< 1.0	U
96-12-8	1,2-Dibromo-3-chloropropane	5.0	< 5.0	U
96-18-4	1,2,3-Trichloropropane	2.0	< 2.0	U
110-57-6	trans-1,4-Dichloro-2-butene	5.0	< 5.0	U
108-67-8	1,3,5-Trimethylbenzene	1.0	< 1.0	U
95-63-6	1,2,4-Trimethylbenzene	1.0	< 1.0	U
87-68-3	Hexachlorobutadiene	5.0	< 5.0	U
106-93-4	Ethylene Dibromide	1.0	< 1.0	U
74-97-5	Bromochloromethane	1.0	< 1.0	U
594-20-7	2,2-Dichloropropane	1.0	< 1.0	U
142-28-9	1,3-Dichloropropane	1.0	< 1.0	U
98-82-8	Isopropylbenzene	1.0	< 1.0	U
103-65-1	n-Propylbenzene	1.0	< 1.0	U
108-86-1	Bromobenzene	1.0	< 1.0	U
95-49-8	2-Chlorotoluene	1.0	< 1.0	U
106-43-4	4-Chlorotoluene	1.0	< 1.0	U
98-06-6	tert-Butylbenzene	1.0	< 1.0	U
135-98-8	sec-Butylbenzene	1.0	< 1.0	U
99-87-6	4-Isopropyltoluene	1.0	< 1.0	U
104-51-8	n-Butylbenzene	1.0	< 1.0	U
120-82-1	1,2,4-Trichlorobenzene	5.0	< 5.0	U
91-20-3	Naphthalene	5.0	< 5.0	U
87-61-6	1,2,3-Trichlorobenzene	5.0	< 5.0	U

Reported in µg/kg (ppb)

Volatile Surrogate Recovery

d4-1,2-Dichloroethane	102%
d8-Toluene	99.5%
Bromofluorobenzene	99.0%
d4-1,2-Dichlorobenzene	101%

ANALYTICAL RESOURCES INCORPORATED

VOA SURROGATE RECOVERY SUMMARY

Matrix: Soil

QC Report No: TO44-The Boeing Company
Project: NBF-RRSS

ARI ID	Client ID	Level	DCE	TOL	BFB	DCB	TOT OUT
MB-100511	Method Blank	Low	102%	99.5%	99.0%	101%	0
LCS-100511	Lab Control	Low	97.7%	100%	99.4%	99.7%	0
LCSD-100511	Lab Control Dup	Low	99.1%	99.6%	100%	98.4%	0
TO44A	NBF-RRSS-A-092711	Low	100%	98.9%	98.1%	99.7%	0

	LCS/MB LIMITS		QC LIMITS	
SW8260C	Low	Med	Low	Med
(DCE) = d4-1,2-Dichloroethane	79-121	76-120	75-152	69-120
(TOL) = d8-Toluene	80-120	80-120	82-115	80-120
(BFB) = Bromofluorobenzene	80-120	80-120	64-120	76-128
(DCB) = d4-1,2-Dichlorobenzene	80-120	80-120	80-120	80-120

Log Number Range: 11-21302 to 11-21302

ANALYTICAL RESOURCES INCORPORATED

ORGANICS ANALYSIS DATA SHEET
Volatiles by Purge & Trap GC/MS-Method SW8260C **Sample ID: LCS-100511**
 LAB CONTROL SAMPLE

Lab Sample ID: LCS-100511
LIMS ID: 11-21302
Matrix: Soil
Data Release Authorized: VB
Reported: 10/07/11

QC Report No: TO44-The Boeing Company
Project: NBF-RRSS

Date Sampled: NA
Date Received: NA

Instrument/Analyst LCS: NT9/PAB
LCSD: NT9/PAB
Date Analyzed LCS: 10/05/11 10:01
LCSD: 10/05/11 10:23

Sample Amount LCS: 5.00 g-dry-wt
LCSD: 5.00 g-dry-wt
Purge Volume LCS: 5.0 mL
LCSD: 5.0 mL
Moisture: NA

Analyte	LCS	Spike Added-LCS	LCS Recovery	LCSD	Spike Added-LCSD	LCSD Recovery	RPD
Chloromethane	48.1	50.0	96.2%	47.1	50.0	94.2%	2.1%
Bromomethane	43.3	50.0	86.6%	43.5	50.0	87.0%	0.5%
Vinyl Chloride	48.0	50.0	96.0%	47.0	50.0	94.0%	2.1%
Chloroethane	46.6	50.0	93.2%	47.9	50.0	95.8%	2.8%
Methylene Chloride	44.4	50.0	88.8%	44.4	50.0	88.8%	0.0%
Acetone	221	250	88.4%	221	250	88.4%	0.0%
Carbon Disulfide	47.5	50.0	95.0%	47.5	50.0	95.0%	0.0%
1,1-Dichloroethene	46.4	50.0	92.8%	46.1	50.0	92.2%	0.6%
1,1-Dichloroethane	50.4 Q	50.0	101%	45.0 Q	50.0	90.0%	11.3%
trans-1,2-Dichloroethene	45.7	50.0	91.4%	45.6	50.0	91.2%	0.2%
cis-1,2-Dichloroethene	46.7	50.0	93.4%	46.9	50.0	93.8%	0.4%
Chloroform	46.3	50.0	92.6%	46.2	50.0	92.4%	0.2%
1,2-Dichloroethane	45.5	50.0	91.0%	45.9	50.0	91.8%	0.9%
2-Butanone	237	250	94.8%	245	250	98.0%	3.3%
1,1,1-Trichloroethane	47.3	50.0	94.6%	47.1	50.0	94.2%	0.4%
Carbon Tetrachloride	48.7	50.0	97.4%	47.7	50.0	95.4%	2.1%
Vinyl Acetate	47.3	50.0	94.6%	48.8	50.0	97.6%	3.1%
Bromodichloromethane	47.4	50.0	94.8%	47.2	50.0	94.4%	0.4%
1,2-Dichloropropane	45.4	50.0	90.8%	44.7	50.0	89.4%	1.6%
cis-1,3-Dichloropropene	48.7	50.0	97.4%	48.4	50.0	96.8%	0.6%
Trichloroethene	47.0	50.0	94.0%	46.1	50.0	92.2%	1.9%
Dibromochloromethane	49.2	50.0	98.4%	48.7	50.0	97.4%	1.0%
1,1,2-Trichloroethane	46.0	50.0	92.0%	46.3	50.0	92.6%	0.7%
Benzene	45.6	50.0	91.2%	45.4	50.0	90.8%	0.4%
trans-1,3-Dichloropropene	49.2	50.0	98.4%	49.4	50.0	98.8%	0.4%
2-Chloroethylvinylether	47.9	50.0	95.8%	48.4	50.0	96.8%	1.0%
Bromoform	41.6	50.0	83.2%	41.0	50.0	82.0%	1.5%
4-Methyl-2-Pentanone (MIBK)	248	250	99.2%	252	250	101%	1.6%
2-Hexanone	250	250	100%	254	250	102%	1.6%
Tetrachloroethene	48.7	50.0	97.4%	46.9	50.0	93.8%	3.8%
1,1,2,2-Tetrachloroethane	46.8	50.0	93.6%	47.2	50.0	94.4%	0.9%
Toluene	45.7	50.0	91.4%	44.9	50.0	89.8%	1.8%
Chlorobenzene	46.0	50.0	92.0%	45.3	50.0	90.6%	1.5%
Ethylbenzene	46.8	50.0	93.6%	45.8	50.0	91.6%	2.2%
Styrene	49.9	50.0	99.8%	49.0	50.0	98.0%	1.8%
Trichlorofluoromethane	45.5	50.0	91.0%	46.1	50.0	92.2%	1.3%
1,1,2-Trichloro-1,2,2-trifluoroetha	46.7	50.0	93.4%	45.8	50.0	91.6%	1.9%
m,p-Xylene	97.8	100	97.8%	94.9	100	94.9%	3.0%
o-Xylene	48.4	50.0	96.8%	47.4	50.0	94.8%	2.1%

ANALYTICAL RESOURCES INCORPORATED

ORGANICS ANALYSIS DATA SHEET
Volatiles by Purge & Trap GC/MS-Method SW8260C **Sample ID: LCS-100511**
 LAB CONTROL SAMPLE

Lab Sample ID: LCS-100511 QC Report No: TO44-The Boeing Company
LIMS ID: 11-21302 Project: NBF-RRSS
Matrix: Soil

Analyte	LCS	Spike Added-LCS	LCS Recovery	LCSD	Spike Added-LCSD	LCSD Recovery	RPD
1,2-Dichlorobenzene	46.9	50.0	93.8%	45.8	50.0	91.6%	2.4%
1,3-Dichlorobenzene	48.6	50.0	97.2%	46.8	50.0	93.6%	3.8%
1,4-Dichlorobenzene	47.9	50.0	95.8%	46.5	50.0	93.0%	3.0%
Acrolein	239	250	95.6%	245	250	98.0%	2.5%
Methyl Iodide	41.5	50.0	83.0%	42.0	50.0	84.0%	1.2%
Bromoethane	45.4	50.0	90.8%	44.9	50.0	89.8%	1.1%
Acrylonitrile	47.4	50.0	94.8%	48.3	50.0	96.6%	1.9%
1,1-Dichloropropene	47.6	50.0	95.2%	46.6	50.0	93.2%	2.1%
Dibromomethane	46.3	50.0	92.6%	47.0	50.0	94.0%	1.5%
1,1,1,2-Tetrachloroethane	47.3	50.0	94.6%	46.9	50.0	93.8%	0.8%
1,2-Dibromo-3-chloropropane	47.0	50.0	94.0%	47.4	50.0	94.8%	0.8%
1,2,3-Trichloropropane	46.8	50.0	93.6%	46.9	50.0	93.8%	0.2%
trans-1,4-Dichloro-2-butene	48.7	50.0	97.4%	48.7	50.0	97.4%	0.0%
1,3,5-Trimethylbenzene	50.0	50.0	100%	47.9	50.0	95.8%	4.3%
1,2,4-Trimethylbenzene	50.0	50.0	100%	48.0	50.0	96.0%	4.1%
Hexachlorobutadiene	49.4	50.0	98.8%	47.2	50.0	94.4%	4.6%
Ethylene Dibromide	47.6	50.0	95.2%	48.6	50.0	97.2%	2.1%
Bromochloromethane	47.2	50.0	94.4%	47.1	50.0	94.2%	0.2%
2,2-Dichloropropane	48.9	50.0	97.8%	48.3	50.0	96.6%	1.2%
1,3-Dichloropropane	46.5	50.0	93.0%	46.4	50.0	92.8%	0.2%
Isopropylbenzene	49.2	50.0	98.4%	47.2	50.0	94.4%	4.1%
n-Propylbenzene	49.0	50.0	98.0%	46.9	50.0	93.8%	4.4%
Bromobenzene	47.0	50.0	94.0%	46.0	50.0	92.0%	2.2%
2-Chlorotoluene	48.7	50.0	97.4%	46.1	50.0	92.2%	5.5%
4-Chlorotoluene	48.8	50.0	97.6%	47.0	50.0	94.0%	3.8%
tert-Butylbenzene	49.2	50.0	98.4%	47.3	50.0	94.6%	3.9%
sec-Butylbenzene	49.5 Q	50.0	99.0%	47.2 Q	50.0	94.4%	4.8%
4-Isopropyltoluene	51.3 Q	50.0	103%	48.8 Q	50.0	97.6%	5.0%
n-Butylbenzene	51.6 Q	50.0	103%	48.8 Q	50.0	97.6%	5.6%
1,2,4-Trichlorobenzene	53.5 Q	50.0	107%	51.2 Q	50.0	102%	4.4%
Naphthalene	52.1	50.0	104%	52.6	50.0	105%	1.0%
1,2,3-Trichlorobenzene	51.2	50.0	102%	50.7	50.0	101%	1.0%

Reported in µg/kg (ppb)

RPD calculated using sample concentrations per SW846.

Volatile Surrogate Recovery

	LCS	LCSD
d4-1,2-Dichloroethane	97.7%	99.1%
d8-Toluene	100%	99.6%
Bromofluorobenzene	99.4%	100%
d4-1,2-Dichlorobenzene	99.7%	98.4%

ANALYTICAL RESOURCES INCORPORATED

ORGANICS ANALYSIS DATA SHEET
TPHG by Method NWTPHG
Matrix: Soil

Data Release Authorized:
Reported: 10/10/11

QC Report No: TO44-The Boeing Company
Project: NBF-RRSS
Event: NA
Date Sampled: 09/27/11
Date Received: 09/27/11

ARI ID	Client ID	Analysis Date	Basis	Range	Result
MB-100411	Method Blank	10/04/11	Dry	Gasoline	< 5.0 U
11-21302		PID2		HC ID	---
				Trifluorotoluene	97.5%
				Bromobenzene	95.3%
TO44A	NBF-RRSS-A-092711	10/04/11	Dry	Gasoline	< 8.3 U
11-21302		PID2		HC ID	---
				Trifluorotoluene	98.1%
				Bromobenzene	95.0%

Gasoline values reported in mg/kg (ppm)

Quantitation on total peaks in the gasoline range from Toluene to Naphthalene.

GAS: Indicates the presence of gasoline or weathered gasoline.
GRO: Positive result that does not match an identifiable gasoline pattern.

Results corrected for soil moisture content per Section 11.10.5 of EPA Method 8000C.

ANALYTICAL RESOURCES INCORPORATED

TPHG SOIL SURROGATE RECOVERY SUMMARY

ARI Job: TO44
Matrix: Soil

QC Report No: TO44-The Boeing Company
Project: NBF-RRSS
Event: NA

Client ID	BFB	TFT	BBZ	TOT OUT
MB-100411	NA	97.5%	95.3%	0
LCS-100411	NA	96.8%	93.5%	0
LCSD-100411	NA	99.2%	96.2%	0
NBF-RRSS-A-092711	NA	98.1%	95.0%	0

	LCS/MB LIMITS	QC LIMITS
(BFB) = Bromofluorobenzene	(70-130)	(70-130)
(TFT) = Trifluorotoluene	(80-120)	(66-123)
(BBZ) = Bromobenzene	(80-120)	(62-130)

Log Number Range: 11-21302 to 11-21302

FORM II TPHG

ANALYTICAL RESOURCES INCORPORATED

ORGANICS ANALYSIS DATA SHEET
TPHG by Method NWTPHG

Sample ID: LCS-100411
LAB CONTROL SAMPLE

Lab Sample ID: LCS-100411
LIMS ID: 11-21302
Matrix: Soil
Data Release Authorized:
Reported: 10/10/11

QC Report No: TO44-The Boeing Company
Project: NBF-RRSS
Event: NA
Date Sampled: NA
Date Received: NA

Date Analyzed LCS: 10/04/11 07:50
LCSD: 10/04/11 08:18
Instrument/Analyst LCS: PID2/MH
LCSD: PID2/MH

Purge Volume: 5.0 mL

Sample Amount LCS: 100 mg-dry-wt
LCSD: 100 mg-dry-wt

Analyte	LCS	Spike Added-LCS	LCS Recovery	LCSD	Spike Added-LCSD	LCSD Recovery	RPD
Gasoline Range Hydrocarbons	45.6	50.0	91.2%	46.2	50.0	92.4%	1.3%

Reported in mg/kg (ppm)

RPD calculated using sample concentrations per SW846.

TPHG Surrogate Recovery

	LCS	LCSD
Trifluorotoluene	96.8%	99.2%
Bromobenzene	93.5%	96.2%

ANALYTICAL RESOURCES INCORPORATED

ORGANICS ANALYSIS DATA SHEET
PCB by GC/ECD Method SW8082

Sample ID: NBF-RRSS-A-092711
SAMPLE

Lab Sample ID: TO44A
LIMS ID: 11-21302
Matrix: Soil
Data Release Authorized:
Reported: 10/07/11

QC Report No: TO44-The Boeing Company
Project: NBF-RRSS

Date Sampled: 09/27/11
Date Received: 09/27/11

Date Extracted: 10/04/11
Date Analyzed: 10/05/11 19:22
Instrument/Analyst: ECD5/AAR
GPC Cleanup: No
Sulfur Cleanup: Yes
Acid Cleanup: Yes
Florisil Cleanup: No

Sample Amount: 12.6 g-dry-wt
Final Extract Volume: 4.00 mL
Dilution Factor: 1.00
Silica Gel: No

Percent Moisture: 17.8%

CAS Number	Analyte	RL	Result
12674-11-2	Aroclor 1016	32	< 32 U
53469-21-9	Aroclor 1242	32	< 32 U
12672-29-6	Aroclor 1248	32	< 32 U
11097-69-1	Aroclor 1254	32	< 32 U
11096-82-5	Aroclor 1260	32	< 32 U
11104-28-2	Aroclor 1221	32	< 32 U
11141-16-5	Aroclor 1232	32	< 32 U
37324-23-5	Aroclor 1262	32	< 32 U

Reported in µg/kg (ppb)

PCB Surrogate Recovery

Decachlorobiphenyl	54.5%
Tetrachlorometaxylene	68.5%

ANALYTICAL RESOURCES INCORPORATED

ORGANICS ANALYSIS DATA SHEET
PCB by GC/ECD Method SW8082

Sample ID: MB-100411
METHOD BLANK

Lab Sample ID: MB-100411
LIMS ID: 11-21302
Matrix: Soil
Data Release Authorized: VD
Reported: 10/07/11

QC Report No: T044-The Boeing Company
Project: NBF-RRSS

Date Sampled: NA
Date Received: NA

Date Extracted: 10/04/11
Date Analyzed: 10/05/11 15:54
Instrument/Analyst: ECD5/AAR
GPC Cleanup: No
Sulfur Cleanup: Yes
Acid Cleanup: Yes
Florisil Cleanup: No

Sample Amount: 12.0 g
Final Extract Volume: 4.00 mL
Dilution Factor: 1.00
Silica Gel: No

Percent Moisture: NA

CAS Number	Analyte	RL	Result
12674-11-2	Aroclor 1016	33	< 33 U
53469-21-9	Aroclor 1242	33	< 33 U
12672-29-6	Aroclor 1248	33	< 33 U
11097-69-1	Aroclor 1254	33	< 33 U
11096-82-5	Aroclor 1260	33	< 33 U
11104-28-2	Aroclor 1221	33	< 33 U
11141-16-5	Aroclor 1232	33	< 33 U
37324-23-5	Aroclor 1262	33	< 33 U

Reported in µg/kg (ppb)

PCB Surrogate Recovery

Decachlorobiphenyl	79.5%
Tetrachlorometaxylene	83.5%

ANALYTICAL RESOURCES INCORPORATED

SW8082/PCB SOIL/SEDIMENT SURROGATE RECOVERY SUMMARY

Matrix: Soil

QC Report No: TO44-The Boeing Company
Project: NBF-RRSS

Client ID	DCBP % REC	DCBP LCL-UCL	TCMX % REC	TCMX LCL-UCL	TOT OUT
MB-100411	79.5%	51-112	83.5%	46-111	0
LCS-100411	76.0%	51-112	82.8%	46-111	0
LCSD-100411	76.5%	51-112	81.2%	46-111	0
NBF-RRSS-A-092711	54.5%	42-127	68.5%	50-114	0

Microwave (MARS) Control Limits PCBSMI
Prep Method: SW3546
Log Number Range: 11-21302 to 11-21302

FORM-II SW8082

ANALYTICAL RESOURCES INCORPORATED

ORGANICS ANALYSIS DATA SHEET
PCB by GC/ECD Method SW8082

Sample ID: LCS-100411
LCS/LCSD

Lab Sample ID: LCS-100411
LIMS ID: 11-21302
Matrix: Soil
Data Release Authorized: VB
Reported: 10/07/11

QC Report No: T044-The Boeing Company
Project: NBF-RRSS

Date Sampled: NA
Date Received: NA

Date Extracted LCS/LCSD: 10/04/11

Date Analyzed LCS: 10/05/11 16:13
LCSD: 10/05/11 16:32
Instrument/Analyst LCS: ECD5/AAR
LCSD: ECD5/AAR
GPC Cleanup: No
Sulfur Cleanup: Yes
Acid Cleanup: Yes
Florisil Cleanup: No

Sample Amount LCS: 12.0 g-dry-wt
LCSD: 12.0 g-dry-wt
Final Extract Volume LCS: 4.00 mL
LCSD: 4.00 mL
Dilution Factor LCS: 1.00
LCSD: 1.00
Silica Gel: No

Percent Moisture: NA

Analyte	LCS	Spike Added-LCS	LCS Recovery	LCSD	Spike Added-LCSD	LCSD Recovery	RPD
Aroclor 1016	126	167	75.4%	127	167	76.0%	0.8%
Aroclor 1260	124	167	74.3%	125	167	74.9%	0.8%

PCB Surrogate Recovery

	LCS	LCSD
Decachlorobiphenyl	76.0%	76.5%
Tetrachlorometaxylene	82.8%	81.2%

Results reported in µg/kg (ppb)
RPD calculated using sample concentrations per SW846.

ANALYTICAL RESOURCES INCORPORATED

ORGANICS ANALYSIS DATA SHEET
TOTAL DIESEL RANGE HYDROCARBONS
NWTPHD by GC/FID
Page 1 of 1
Matrix: Soil

QC Report No: TO44-The Boeing Company
Project: NBF-RRSS

Date Received: 09/27/11

Data Release Authorized:
Reported: 10/04/11

ARI ID	Sample ID	Extraction Date	Analysis Date	EFV DL	Range	RL	Result
MB-100111	Method Blank	10/01/11	10/03/11	1.00	Diesel	5.0	< 5.0 U
11-21302	HC ID: ---		FID4A	1.0	Motor Oil	10	< 10 U
					o-Terphenyl		93.6%
TO44A	NBF-RRSS-A-092711	10/01/11	10/03/11	1.00	**Diesel**	**5.9**	**29**
11-21302	HC ID: **DIESEL/MOTOR OIL**		FID4A	1.0	**Motor Oil**	**12**	**55**
					o-Terphenyl		72.1%

Reported in mg/kg (ppm)

EFV-Effective Final Volume in mL.
DL-Dilution of extract prior to analysis.
RL-Reporting limit.

Diesel quantitation on total peaks in the range from C12 to C24.
Motor Oil quantitation on total peaks in the range from C24 to C38.
HC ID: DRO/RRO indicates results of organics or additional hydrocarbons in ranges are not identifiable.

ANALYTICAL RESOURCES INCORPORATED

TPHD SURROGATE RECOVERY SUMMARY

Matrix: Soil

QC Report No: TO44-The Boeing Company
Project: NBF-RRSS

Client ID	OTER	TOT OUT
100111MBS	93.6%	0
100111LCS	87.5%	0
100111LCSD	88.1%	0
NBF-RRSS-A-092711	72.1%	0

	LCS/MB LIMITS	QC LIMITS
(OTER) = o-Terphenyl	(50-150)	(50-150)

Prep Method: SW3546
Log Number Range: 11-21302 to 11-21302

FORM-II TPHD

ANALYTICAL RESOURCES INCORPORATED

ORGANICS ANALYSIS DATA SHEET
NWTPHD by GC/FID

Sample ID: LCS-100111
LCS/LCSD

Lab Sample ID: LCS-100111
LIMS ID: 11-21302
Matrix: Soil
Data Release Authorized:
Reported: 10/04/11

QC Report No: TO44-The Boeing Company
Project: NBF-RRSS

Date Sampled: NA
Date Received: NA

Date Extracted LCS/LCSD: 10/01/11

Date Analyzed LCS: 10/03/11 19:44
LCSD: 10/03/11 20:07
Instrument/Analyst LCS: FID4A/MS
LCSD: FID4A/MS

Sample Amount LCS: 10.0 g-dry-wt
LCSD: 10.0 g-dry-wt
Final Extract Volume LCS: 1.0 mL
LCSD: 1.0 mL
Dilution Factor LCS: 1.00
LCSD: 1.00

Range	LCS	Spike Added-LCS	LCS Recovery	LCSD	Spike Added-LCSD	LCSD Recovery	RPD
Diesel	133	150	88.7%	128	150	85.3%	3.8%

TPHD Surrogate Recovery

	LCS	LCSD
o-Terphenyl	87.5%	88.1%

Results reported in mg/kg
RPD calculated using sample concentrations per SW846.

ANALYTICAL RESOURCES INCORPORATED

TOTAL DIESEL RANGE HYDROCARBONS-EXTRACTION REPORT

ARI Job: TO44
Project: NBF-RRSS

Matrix: Soil
Date Received: 09/27/11

ARI ID	Client ID	Client Amt	Final Vol	Basis	Prep Date
11-21302-100111MB1	Method Blank	10.0 g	1.00 mL	-	10/01/11
11-21302-100111LCS1	Lab Control	10.0 g	1.00 mL	-	10/01/11
11-21302-100111LCSD1	Lab Control Dup	10.0 g	1.00 mL	-	10/01/11
11-21302-TO44A	NBF-RRSS-A-092711	8.44 g	1.00 mL	D	10/01/11

Basis: D=Dry Weight W=As Received

SAMPLE RESULTS-CONVENTIONALS
TO44-The Boeing Company

ANALYTICAL RESOURCES INCORPORATED

Matrix: Soil
Data Release Authorized:
Reported: 09/29/11

Project: NBF-RRSS
Event: NA
Date Sampled: 09/27/11
Date Received: 09/27/11

Client ID: NBF-RRSS-A-092711
ARI ID: 11-21302 TO44A

Analyte	Date	Method	Units	RL	Sample
pH	09/28/11 092811#1	SW9045	std units	0.01	6.87

RL Analytical reporting limit
U Undetected at reported detection limit

Results reported on a fresh weight basis
pH determined on 1:1 soil:D.I. water extracts.

LAB CONTROL RESULTS-CONVENTIONALS
TO44-The Boeing Company

ANALYTICAL RESOURCES INCORPORATED

Matrix: Soil
Data Release Authorized:
Reported: 09/29/11

Project: NBF-RRSS
Event: NA
Date Sampled: NA
Date Received: NA

Analyte/Method	QC ID	Date	Units	LCS	Spike Added	Recovery
pH SW9045	ICVL	09/28/11	std units	6.97	7.00	0.03

pH is evaluated as the Absolute Difference between the values rather than Percent Recovery.

ANALYTICAL RESOURCES INCORPORATED

INORGANICS ANALYSIS DATA SHEET
TOTAL METALS

Sample ID: NBF-RRSS-A-092711
SAMPLE

Lab Sample ID: TO44A
LIMS ID: 11-21302
Matrix: Soil
Data Release Authorized:
Reported: 10/06/11

QC Report No: TO44-The Boeing Company
Project: NBF-RRSS

Date Sampled: 09/27/11
Date Received: 09/27/11

Percent Total Solids: 80.3%

Prep Meth	Prep Date	Analysis Method	Analysis Date	CAS Number	Analyte	RL	mg/kg-dry	Q
3050B	09/29/11	6010B	10/05/11	**7440-38-2**	**Arsenic**	6	**7**	
3050B	09/29/11	6010B	10/05/11	**7440-43-9**	**Cadmium**	0.2	**10.1**	
3050B	09/29/11	6010B	10/05/11	**7440-47-3**	**Chromium**	0.6	**16.9**	
3050B	09/29/11	6010B	10/05/11	**7439-92-1**	**Lead**	2	**7**	
CLP	09/29/11	7471A	09/30/11	**7439-97-6**	**Mercury**	0.03	**0.12**	

U-Analyte undetected at given RL
RL-Reporting Limit

ANALYTICAL RESOURCES INCORPORATED

INORGANICS ANALYSIS DATA SHEET
TOTAL METALS

Sample ID: LAB CONTROL

Lab Sample ID: TO44LCS
LIMS ID: 11-21302
Matrix: Soil
Data Release Authorized:
Reported: 10/06/11

QC Report No: TO44-The Boeing Company
Project: NBF-RRSS

Date Sampled: NA
Date Received: NA

BLANK SPIKE QUALITY CONTROL REPORT

Analyte	Analysis Method	Spike Found	Spike Added	% Recovery	Q
Arsenic	6010B	199	200	99.5%	
Cadmium	6010B	52.8	50.0	106%	
Chromium	6010B	52.3	50.0	105%	
Lead	6010B	196	200	98.0%	
Mercury	7471A	0.52	0.50	104%	

Reported in mg/kg-dry

N-Control limit not met
NA-Not Applicable, Analyte Not Spiked
Control Limits: 80-120%

ANALYTICAL RESOURCES INCORPORATED

INORGANICS ANALYSIS DATA SHEET
TOTAL METALS

Sample ID: METHOD BLANK

Lab Sample ID: TO44MB
LIMS ID: 11-21302
Matrix: Soil
Data Release Authorized:
Reported: 10/06/11

QC Report No: TO44-The Boeing Company
Project: NBF-RRSS

Date Sampled: NA
Date Received: NA

Percent Total Solids: NA

Prep Meth	Prep Date	Analysis Method	Analysis Date	CAS Number	Analyte	RL	mg/kg-dry	Q
3050B	09/29/11	6010B	10/05/11	7440-38-2	Arsenic	5	5	U
3050B	09/29/11	6010B	10/05/11	7440-43-9	Cadmium	0.2	0.2	U
3050B	09/29/11	6010B	10/05/11	7440-47-3	Chromium	0.5	0.5	U
3050B	09/29/11	6010B	10/05/11	7439-92-1	Lead	2	2	U
CLP	09/29/11	7471A	09/30/11	7439-97-6	Mercury	0.02	0.02	U

U-Analyte undetected at given RL
RL-Reporting Limit

APPENDIX D

Discharge Authorization for Treated Dewatering Fluids and Analytical Results

Discharge Authorization 827-01

King County
Wastewater Treatment Division
Industrial Waste Program
Department of Natural Resources and Parks
130 Nickerson Street, Suite 200
Seattle, WA 98109-1658
206-263-3000 Fax 206-263-3001
TTY Relay: 711

June 30, 2011

CERTIFIED MAIL
RETURN RECEIPT REQUESTED

Michael Verhaar
Boeing Commercial Airplane
North Field Construction Site Dewatering
P.O. Box 3707, MC 67-74
Seattle, WA 98124

Issuance of Wastewater Discharge Authorization No. 827-01 to Boeing Commercial Airplane - North Field Construction Site Dewatering

Dear Mr. Verhaar:

The King County Industrial Waste Program has reviewed your application to discharge industrial wastewater to the sewer system from the Boeing Commercial Airplane - North Field construction site dewatering located at 7370 East Marginal Way South, Seattle, Washington, and has issued the enclosed Major Discharge Authorization.

This authorization permits you to discharge limited amounts of industrial wastewater into King County's sewer system in accordance with the effluent limitations and other requirements and conditions set forth in the document and the regulations outlined in King County Code 28.84.060 (enclosed). As long as you maintain good compliance and do not change the nature and volume of your discharge the formal requirements and fees of a full wastewater permit will not be required.

If you propose to increase the volume of your discharge or change the type or quantities of substances discharged, you must contact the King County Industrial Waste Program at least 60 days before making these changes.

If at any time you have questions about this discharge authorization, or other questions about your wastewater discharge, please call me at 206-263-3028 or email me at peggy.rice@kingcounty.gov.

Thank you for helping support our mission to protect public health and enhance the environment.

Sincerely,

Peggy Rice
Compliance Investigator

Enclosures

cc: Susie Larson, Seattle Public Utilities
Doug Hilderbrand, King County
Todd Keithahn, King County

King County

MAJOR DISCHARGE AUTHORIZATION
King County Industrial Waste Program
130 Nickerson Street, Suite 200
Seattle, Washington 98109-1658

NUMBER 827-01
for

Boeing Commercial Airplane - North Field Construction Site Dewatering 2011

Plant Address: 7370 East Marginal Way South
Seattle, Washington

Mailing Address: P.O. Box 3707, MC 67-74
Seattle, WA 98124

Phone: 425-965-1567

Emergency (24-Hour) Phone: 425-965-1567

Industry Type: Construction dewatering

SIC Code: NA **EPA Id. #:** NA

Sample Site No.: IW1074A

Discharge To: West Point Treatment Plant

*Note: This authorization is valid only for the specific discharges shown below:

Discharge Process: Wastewater generated by construction dewatering.

Pre-treatment Process: Gravity separation/Filtration/Carbon absorption

Maximum Volume: 100,000 gallons per day

Maximum Discharge Rate: 250 gallons per minute

Effective Date: July 1, 2011
Expiration Date: October 31, 2011

Permission is hereby granted to discharge industrial wastewater from the above-identified facility into the King County sewer system in accordance with the effluent limitations and monitoring requirements set forth in this authorization.

If the industrial user wishes to continue to discharge after the expiration date, an application must be filed for re-issuance of this discharge authorization at least 180 days prior to the expiration date. For information concerning this King County Discharge Authorization please call Industrial Waste Compliance Investigator Peggy Rice at 206-263-3028.

24-HOUR EMERGENCY NOTIFICATION
West Point Treatment Plant: 206-263-3801
Department of Ecology: 425-649-7000

SPECIAL CONDITIONS

A. Discharge point is into manhole 3-E-11 or other manholes if approved by King County and Seattle Public Utilities.

B. **PCB Discharge Limits**

All PCB limits are per Aroclor. The detection limit for Aroclor analysis shall be no greater than 0.10 micrograms per liter (µg/L).

PCB (per Aroclor)	CAS Number	Discharge Limit	PCB (per aroclor)	CAS	Discharge Limit
Aroclor 1016	CAS 12674-11-2	0.27 µg/L	Aroclor 1248	CAS 12672-29-6	0.27 µg/L
Aroclor 1221	CAS 1104-28-2	0.27 µg/L	Aroclor 1254	CAS 11141-16-5	0.27 µg/L
Aroclor 1232	CAS 11141-16-5	0.27 µg/L	Aroclor 1260	CAS 11096-82-5	0.27 µg/L
Aroclor 1242	CAS 53469-21-9	0.27 µg/L	Aroclor 1262	CAS 37324-23-5	0.27 µg/L

C. For the first five days of discharge, all treated wastewater must be collected in batch tanks and a representative sample from each tank collected for PCBs (in accordance with self-monitoring requirements and special conditions) prior to discharge. If sample results are all within the discharge limitations the batch may be discharged.

D. If all five days of sampling results are in compliance with all discharge limits, the permittee may commence direct discharge under the terms of this discharge authorization.

E. All requirements for GAC breakthrough sampling to monitor the efficiency of the treatment system, as relayed to the permittee or their representatives by King County Industrial Waste Engineer Bruce Tiffany must be complied with and records kept that are available for review by King County representatives during normal business hours.

F. By no later than July 15, 2011, the permittee must submit a list of Boeing Commercial Airplane and contractor personnel responsible for dewatering activities, including operation and maintenance of the wastewater treatment system and monitoring of the discharge to the sanitary sewer. The list shall include the site contacts' name, title, company, and phone numbers (office and cell).

G. Discharge to the sanitary sewer shall not begin until King County has conducted a pre-operative inspection of the pretreatment facilities and has sent written notification (e-mail is sufficient) to the permittee that discharges may begin.

H. All persons responsible for monitoring the discharge to the sanitary sewer shall review a copy of this authorization.

I. A copy of this authorization shall be on site at all times for review and reference.

J. This waste discharge authorization grants the discharge of limited amounts of wastewater from the following wastestreams:

1. Contaminated stormwater runoff
2. Excavation and dewatering
3. Well dewatering
4. Wheel wash water

Wastes or contaminants from sources other than permitted herein shall not be discharged to the sanitary sewer without prior approval from the King County Industrial Waste Program.

K. The discharge shall not cause hydraulic overloading conditions of the sewerage conveyance system. During periods of peak hydraulic loading King County and Seattle Public Utilities representatives reserve the authority to request that discharge to the sewer be stopped.

L. The authorization holder is responsible for contacting King County should site conditions indicate potential for contamination.

M. All wastewater shall be collected and treated in accordance with treatment methods approved by King County. Wastewater shall not bypass treatment systems. Modifications to wastewater treatment systems shall not occur without prior approval from King County.

N. Totalizing and non-resettable flow meters must be installed on all permitted discharge pipes to the sewer.

O. An accessible sampling spigot must be installed on the discharge pipe from the last treatment unit of the wastewater treatment system. The sample site shall be representative of all industrial waste streams discharged to the sewer from this site. Each sample site shall be accessible to King County representatives when discharge to the sewer is occurring.

P. The permittee shall properly operate and maintain all wastewater treatment units to ensure compliance with established discharge limits. Solids accumulation in tanks used for solids settling shall not exceed 25 percent of the tank's hydraulic capacity.

Q. Results of all required self-monitoring sampling must be recorded daily. Recorded information for each discharge site must include:

1. Sample date
2. Sample time
3. Sample results
4. Operator name
5. Comments (if applicable)

These records shall be maintained on site and shall be available for review by King County personnel during normal business hours.

R. The permittee must establish a sewer account with Seattle Public Utilities and provide necessary reports to ensure accurate assessment of sewer charges for all construction dewatering discharge sites associated with this project.

SELF-MONITORING REQUIREMENTS

A. The following self-monitoring requirements shall be met for this discharge authorization:

Parameter	Frequency	Sample Type
Discharge Rate Daily	Daily	Continuous
Total Monthly Flow	Report monthly	Continuous
Aroclor 1232	Once each week	Grab
Aroclor 1016	Once each week	Grab
Aroclor 1221	Once each week	Grab
Aroclor 1242	Once each week	Grab
Aroclor 1248	Once each week	Grab
Aroclor 1254	Once each week	Grab
Aroclor 1260	Once each week	Grab
Aroclor 1262	Once each week	Grab
pH	Once each week	Meter
Nonpolar FOG	Once each month	3 Grabs
Hydrogen Sulfide	Only if operating criteria are exceeded.	Meter reading
Settleable Solids	Only if operating criteria are exceeded.	Grab (by Imhoff cone)
Explosivity	Only if operating criteria are exceeded.	Meter reading

B. The three nonpolar fats, oils, and grease (FOG) grab samples (if required) shall be of equal volume, collected at least five minutes apart, and analyzed separately. When using U.S. Environmental Protection Agency (EPA) approved protocols specified in 40 CFR Part 136, the individual grab samples may be composited (at the laboratory) prior to analysis. The result of the composite sample or the average of the concentrations of the three grab samples may be reported as Total FOG unless the value is 100 mg/L or greater, in which case the concentration of nonpolar FOG must be reported.

C. If a violation of any discharge limits or operating criteria is detected in monitoring, you shall notify the King County Industrial Waste Program immediately upon receipt of analytical data.

D. A self-monitoring report shall be filed with the King County Industrial Waste Program no later than the 15th day of the following month for monthly, weekly, daily samples. If no discharge takes place during any monitoring period, it shall be noted on the report.

E. All self-monitoring data submitted to the King County Industrial Waste Program, which required a laboratory analysis, must have been performed by a laboratory accredited by the Washington State Department of Ecology for each parameter tested, using procedures approved by 40 CFR 136. This does not apply to field measurements performed by the industrial user such as pH, temperature, flow, atmospheric hydrogen sulfide, total dissolved sulfides, total settleable solids by Imhoff cone, or process control information.

F. All sampling data collected by the permittee and analyzed using procedures approved by 40 CFR 136, or approved alternatives, shall be submitted to King County whether required as part of this permit or done voluntarily by the permittee.

G. Self-monitoring reports shall be signed by an authorized representative of the industrial user. The authorized representative of the industrial user is defined as:

1. The president, secretary, treasurer, or a vice-president of the corporation in charge of a principal business function, or any other person who performs similar policy or decision-making functions for the corporation.

2. The manager of one or more manufacturing, production, or operating facilities, but only if the manager:

   a. Is authorized to make management decisions that govern the operation of the regulated facility including having the explicit or implicit duty of making major capital investment recommendations, and initiate and direct other comprehensive measures to assure long-term environmental compliance with environmental laws and regulations
   b. Can ensure that the necessary systems are established or actions taken to gather complete and accurate information for control mechanism requirements and knowledgeable of King County reporting requirements
   c. Has been assigned or delegated the authority to sign documents, in accordance with corporate procedures

3. A general partner or proprietor if the industrial user is a partnership or proprietorship, respectively.

4. A director or highest official appointed or designated to oversee the operation and performance of the industry if the industrial user is a government agency.

5. The individuals described in one through four above may designate an authorized representative if:

   a. The authorization is submitted to King County in writing.
   b. The authorization specifies the individual or position responsible for the overall operation of the facility from which the discharge originates or having overall responsibility for environmental matters for the company or agency.

GENERAL DISCHARGE LIMITATIONS

Operating Criteria

There shall be no odor of solvent, gasoline, or hydrogen sulfide (rotten egg odor), oil sheen, unusual color, or visible turbidity. The discharge must remain translucent. If any of the discharge limits are exceeded, you must stop discharging and notify the King County Industrial Waste Program at 206-263-3000.

Corrosive Substances

Limits

Maximum:	pH 12.0 (s.u.)
Instantaneous minimum:	pH 5.0 (s.u.)
Daily minimum:	pH 5.5 (s.u.)

The instantaneous minimum pH limit is violated whenever any single grab sample or any instantaneous recording is less than pH 5.0. The daily minimum pH limit is violated whenever any continuous recording of 15 minutes or longer remains below pH 5.5 or when each pH value of four consecutive grab samples collected at 15-minute intervals or longer within a 24-hour period remains below pH 5.5.

Discharges of more than 50 gallons per day of caustic solutions equivalent to more than five percent NaOH by weight or greater than pH 12.0 are prohibited unless authorized by the King County Industrial Waste Program and subject to special conditions to protect worker safety, the collection system, and treatment works.

Fats, Oils, and Grease (FOG)

Discharge of FOG shall not result in significant accumulations that either alone or in combination with other wastes are capable of obstructing flow or interfere with the operation or performance of sewer works or treatment facilities.

Nonpolar FOG (oil and grease from petroleum sources): The three nonpolar fats, oils, and grease (FOG) grab samples shall be of equal volume, collected at least five minutes apart, and analyzed separately. When using EPA approved protocols specified in 40 CFR Part 136, the individual grab samples may be composited (at the laboratory) prior to analysis. The result of the composite sample or the average of the concentrations of the three grab samples may be reported as Total FOG unless the value is 100 mg/L or greater, in which case the concentration of nonpolar FOG must be reported.

Polar FOG (oil and grease from animal and/or vegetable origin): Dischargers of polar FOG shall minimize free-floating polar FOG. Dischargers may not add emulsifying agents exclusively for the purpose of emulsifying free floating FOG.

Flammable or Explosive Materials

No person shall discharge any pollutant, as defined in 40 CFR 403.5, that creates a fire or explosion hazard in any sewer or treatment works, including, but not limited to, waste streams with a closed cup flashpoint of less than 140° Fahrenheit or 60° Centigrade using the test methods specified in 40 CFR 261.21.

At no time shall two successive readings on an explosion hazard meter, at the point of discharge into the system (or at any point in the system), be more than five percent nor any single reading be more than 10 percent of the lower explosive limit (LEL) of the meter.

Pollutants subject to this prohibition include, but are not limited to, gasoline, kerosene, naphtha, benzene, toluene, xylene, ethers, alcohols, ketones, aldehydes, peroxides, chlorates, perchlorates, bromates, carbides, hydrides, and sulfides, and any other substances that King County, a fire department, Washington State, or the EPA has notified the user are a fire hazard or a hazard to the system.

Heavy Metals/Cyanide

The industrial user shall not discharge waste, which exceeds the following limitations:

Heavy Metals & Cyanide	Instantaneous Maximum ppm (mg/L)[1]	Daily Average ppm (mg/L)[2]
Arsenic	4.0	1.0
Cadmium	0.6	0.5
Chromium	5.0	2.75
Copper	8.0	3.0
Lead	4.0	2.0
Mercury	0.2	0.1
Nickel	5.0	2.5
Silver	3.0	1.0
Zinc	10.0	5.0
Cyanide	3.0	2.0

[1]The instantaneous maximum is violated whenever the concentration of any sample, including a grab within a series used to calculate daily average concentrations, exceeds the limitation.

[2]The daily average limit is violated: a) for a continuous flow system when a composite sample consisting of four or more consecutive samples collected during a 24-hour period over intervals of 15 minutes or greater exceeds the limitation, or b) for a batch system when any sample exceeds the limitation. A composite sample is defined as at least four grab samples of equal volume taken throughout the processing day from a well-mixed final effluent chamber, and analyzed as a single sample.

High Temperature

The industrial user shall not discharge material with a temperature in excess of 65 °C (150 °F).

Hydrogen Sulfide

Atmospheric hydrogen sulfide: 10.0 ppm
(As measured at a monitoring manhole designated by King County)

Soluble sulfide limits may be established on a case-by-case basis depending upon volume of discharge and conditions in the receiving sewer, including oxygen content and existing sulfide concentrations.

Organic Compounds

No person shall discharge any organic pollutants that result in the presence of toxic gases, vapors, or fumes within a public or private sewer or treatment works in a quantity that may cause worker health and safety problems.

Organic pollutants subject to this restriction include, but are not limited to: Any organic pollutants compound listed in 40 CFR Section 433.11 (e) total toxic organics definition, acetone, 2-butanone (MEK), 4-methyl-2-pentanone (MIBK), and xylenes.

Settleable Solids

Settleable solids concentrations: 7.0 ml/L

GENERAL CONDITIONS

A. All requirements of King County Code pertaining to the discharge of wastes into the municipal sewer system are hereby made a condition of this discharge authorization.

B. The industrial discharger shall implement measures to prevent accidental spills or discharges of prohibited substances to the municipal sewer system. Such measures include, but are not limited to, secondary containment of chemicals and wastes, elimination of connections to the municipal sewer system, and spill response equipment.

C. Any facility changes, which will result in a change in the character or volume of the pollutants discharged to the municipal sewer system, must be reported to your King County Industrial Waste Program representative. Any facility changes that will cause the violation of the effluent limitations specified herein will not be allowed.

D. In the event the permittee is unable to comply with any of the conditions of this discharge authorization because of breakdown of equipment or facilities, an accident caused by human error, negligence, or any other cause, such as an act of nature the company shall:

1. Take immediate action to stop, contain, and clean up the unauthorized discharges and correct the problem.
2. Immediately notify the King County Industrial Waste Program, 206-263-3000, so steps can be taken to prevent damage to the sewerage system.
3. Submit a written report within 14 days describing the breakdown, the actual quantity and quality of resulting waste discharged, corrective action taken, and the steps taken to prevent recurrence.

E. Compliance with these requirements does not relieve the permittee from responsibility to maintain continuous compliance with the conditions of the discharge authorization or the resulting liability for failure to comply.

F. The permittee shall, at all reasonable times, allow authorized representatives of the King County Industrial Waste Program to enter that portion of the premises where an effluent source or disposal system is located or in which any records are required to be kept under the terms and conditions of this discharge authorization.

G. Nothing in this discharge authorization shall be construed as excusing the permittee from compliance with any applicable federal, state, or local statutes, ordinances, or regulations including discharge into waters of the state. Any such discharge is subject to regulation and enforcement action by the Washington State Department of Ecology.

H. This discharge authorization does not authorize discharge after its expiration date. If the permittee wishes to continue to discharge after the expiration date, an application must be filed for reissuance of this discharge authorization at least 180 days prior to the expiration date. If the permittee submits its reapplication in the time specified herein, the permittee shall be deemed to have an effective wastewater discharge authorization until the King County Industrial Waste Program issues or denies the new wastewater discharge authorization. If the permittee fails to file its reapplication in the time period specified herein, the permittee will be deemed to be discharging without authorization.

Compliance Investigator: [illegible] for PR Date: June 30, 2011
Peggy Rice

Monthly Discharge Data Summaries

July 2011 Monthly Data Summary

CLEAR WATER SERVICES

Remediation Solutions for the Real World™ – Stormwater, Groundwater, and Waste Water

MONTHLY DATA SUMMARY FOR CESF OPERATIONS

Job name: Boeing Pipeline Dewatering
Job number: 11BOE1
Month: July-11
Prepared for: Glacier Environmental Services, Inc.

DATE	PRECIP	VOLUME TREATED (Gallons)	VOLUME DISCHARGED (Gallons)	SAND FILTER INFLUENT pH	SAND FILTER INFLUENT TURBIDITY (NTU)	SAND FILTER EFFLUENT pH	SAND FILTER EFFLUENT TURBIDITY (NTU)
-	-	-	-	AVG	AVG	AVG	AVG
7/1/2011	0.00	109,374	13,865	7.74	74.88	7.13	1.60
7/2/2011	0.00	-	-	-	-	-	-
7/3/2011	0.00	-	-	-	-	-	-
7/4/2011	0.00	-	-	-	-	-	-
7/5/2011	0.00	118,325	17,092	8.05	64.32	8.01	2.24
7/6/2011	0.00	140,514	16,842	7.60	74.11	7.38	1.38
7/7/2011	0.01	165,405	15,381	8.09	66.50	7.86	1.46
7/8/2011	0.00	177,090	19,708	7.83	67.73	7.78	3.00
7/9/2011	0.00	282,719	100,000	7.10	95.85	7.15	0.97
7/10/2011	0.00	370,968	100,000	7.11	102.58	7.08	2.16
7/11/2011	0.00	337,293	100,000	7.07	120.79	7.06	2.57
7/12/2011	0.09	325,426	100,000	7.06	130.52	7.04	2.12
7/13/2011	0.01	230,997	100,000	7.03	94.97	7.01	1.35
7/14/2011	0.00	181,172	100,000	7.02	198.61	6.99	1.96
7/15/2011	0.04	249,865	100,000	7.12	206.09	7.08	1.88
7/16/2011	0.33	265,691	100,000	7.49	32.15	7.46	1.80
7/17/2011	0.06	211,569	82,188	7.53	27.32	7.51	1.78
7/18/2011	0.00	265,138	67,826	7.48	37.63	7.48	2.09
7/19/2011	0.00	191,232	76,911	7.46	21.44	7.44	1.29
7/20/2011	0.00	214,371	82,709	7.46	25.11	7.44	1.69
7/21/2011	0.00	252,345	96,917	7.59	26.06	7.54	1.39
7/22/2011	0.00	212,487	81,348	7.64	16.27	7.36	1.13
7/23/2011	0.00	-	-	-	-	-	-
7/24/2011	0.00	-	-	-	-	-	-
7/25/2011	0.33	75,378	30,408	7.79	16.48	7.55	0.35
7/26/2011	0.00	251,014	100,000	7.66	13.89	7.55	0.80
7/27/2011	0.00	253,240	100,000	7.57	12.22	7.53	1.25
7/28/2011	0.00	119,149	48,244	7.58	9.64	7.54	0.94
7/29/2011	0.00	147,779	57,101	7.52	12.80	7.49	0.73
7/30/2011	0.00	244,609	100,000	7.12	184.87	7.11	0.87
7/31/2011	0.00	299,390	100,000	7.09	20.17	7.09	1.52
Monthly	**Total**	**Total**	**Total**	**AVG**	**AVG**	**AVG**	**AVG**
	0.87	**5,583,166**	**1,906,540**	**7.45**	**67.42**	**7.37**	**1.55**

The night of 7/8 to 7/9 a hose blew out. See incident report for more information. On 7/13 and 7/14 the influent flow meter was plugged with debris for a short time period. The flow meter was cleaned and eventually replaced with a magnetic style flow meter

Analytical Resources, Incorporated
Analytical Chemists and Consultants

July 5, 2011

Jeremy Davis
Landau Associates, Inc.
130 Second Ave
Edmonds, WA 98020

RE: Project: NBF – LTST 025.082.311.001
ARI Job: TC99

Dear Jeremy:

Please find enclosed the Chain of Custody (COC) record, sample receipt documentation, and analytical results for the above referenced project. Analytical Resources, Inc. (ARI) accepted two water samples in good condition on July 1, 2011. Two coolers were received with temperatures of 18.1 and 9.6°C.

The samples were analyzed for PCBs, as requested on the COC.

There were no irregularities with the samples.

Quality control analysis results are included for your review. Copies of the reports and all associated raw data will be kept on file electronically at ARI. If you have any questions or require additional information, please contact me at your convenience.

Sincerely,
ANALYTICAL RESOURCES, INC

Kelly Bottem
Client Services Manager
(206) 695-6211
kellyb@arilabs.com
www.arilabs.com

cc: Carl Bach, The Boeing Company, P.O. Box 3707, M/S 1W-12, Seattle, WA 98124-2207

4611 South 134th Place, Suite 100 • Tukwila WA 98168 • **206-695-6200** • **206-695-6201** fax

☐ Seattle/Edmonds (425) 778-0907
☐ Tacoma (253) 926-2493
☐ Spokane (509) 327-9737
☐ Portland (503) 542-1080
☐ _____

LANDAU ASSOCIATES

Chain-of-Custody Record

Date 7/1/11
Page 1 of 1

Project Name NBF - LTST
Project No. 025.082.311.001
Project Location/Event NBF - Dewatering Fluids Treatment System
Sampler's Name JMP
Project Contact Anne H. + Joe Kalmar
Send Results To jdavis@landauinc.com, Anne H. +

Testing Parameters

Turnaround Time
☐ Standard
☐ Accelerated
☒ 24 hr

Sample I.D.	Date	Time	Matrix	No. of Containers	MTCA PCBs
NBF-DTS-A-070111	7/1/11	1455	W	2 500ml Amb.	X
NBF-DTS-B-070111	"	1502	W	"	X

Observations/Comments

X Allow water samples to settle, collect aliquot from clear portion

X NWTPH-Dx - run acid wash/silica gel cleanup

___ run samples standardized to _____ product

___ Analyze for EPH if no specific product identified

VOC/BTEX/VPH (soil):
___ non-preserved
___ preserved w/methanol
___ preserved w/sodium bisulfate
___ Freeze upon receipt

___ Dissolved metal water samples field filtered

Other _____

Special Shipment/Handling or Storage Requirements

Method of Shipment

Relinquished by	Received by	Relinquished by	Received by
Signature	Signature	Signature	Signature
Jeremy Davis	Jennifer Millsap		
Printed Name	Printed Name	Printed Name	Printed Name
Landau Inc	ARI		
Company	Company	Company	Company
Date 7/1/11 Time 1530	Date 7/1/11 Time 1550	Date ____ Time ____	Date ____ Time ____

WHITE COPY - Project File YELLOW COPY - Laboratory PINK COPY - Client Representative

Rev 8/09

Analytical Resources, Incorporated
Analytical Chemists and Consultants

Cooler Receipt Form

ARI Client: Boeing

Project Name: NBF - LTST

COC No(s): _____ NA

Delivered by: Fed-Ex UPS Courier Hand Delivered Other: _____

Assigned ARI Job No: TC99

Tracking No: _____ NA

Preliminary Examination Phase:

Were intact, properly signed and dated custody seals attached to the outside of to cooler? YES NO

Were custody papers included with the cooler? ..... YES NO

Were custody papers properly filled out (ink, signed, etc.) ..... YES NO

Temperature of Cooler(s) (°C) (recommended 2.0-6.0 °C for chemistry)..... 18.1 9.6 ___ ___

If cooler temperature is out of compliance fill out form 00070F

Temp Gun ID#: 90941169

Cooler Accepted by: JM Date: 7/1/11 Time: 1550

Complete custody forms and attach all shipping documents

Log-In Phase:

Was a temperature blank included in the cooler? ..... YES NO

What kind of packing material was used? ... Bubble Wrap Wet Ice Gel Packs Baggies Foam Block Paper Other: _____

Was sufficient ice used (if appropriate)? ..... NA YES NO

Were all bottles sealed in individual plastic bags? ..... YES NO

Did all bottles arrive in good condition (unbroken)? ..... YES NO

Were all bottle labels complete and legible? ..... YES NO

Did the number of containers listed on COC match with the number of containers received? ..... YES NO

Did all bottle labels and tags agree with custody papers? ..... YES NO

Were all bottles used correct for the requested analyses? ..... YES NO

Do any of the analyses (bottles) require preservation? (attach preservation sheet, excluding VOCs)... NA YES NO

Were all VOC vials free of air bubbles? ..... NA YES NO

Was sufficient amount of sample sent in each bottle? ..... YES NO

Date VOC Trip Blank was made at ARI..... NA _____

Was Sample Split by ARI : NA YES Date/Time: _____ Equipment: _____ Split by: _____

Samples Logged by: JM Date: 7/1/11 Time: 1552

***** Notify Project Manager of discrepancies or concerns *****

Sample ID on Bottle	Sample ID on COC	Sample ID on Bottle	Sample ID on COC

Additional Notes, Discrepancies, & Resolutions:

By: Date:

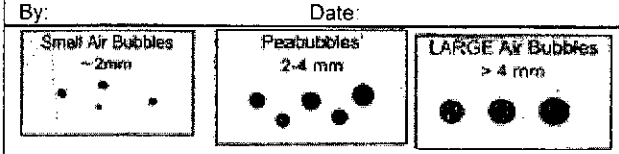

Small → "sm"
Peabubbles → "pb"
Large → "lg"
Headspace → "hs"

Analytical Resources, Incorporated
Analytical Chemists and Consultants

Cooler Temperature Compliance Form

TC99

Cooler#: 1	Temperature(°C): 18.1	
Sample ID	**Bottle Count**	**Bottle Type**
NBF-DTS-A-070111	2	2-500 mL AG

Not Sampled KD 7/1/11

Cooler#: 1	Temperature(°C): 9.6	
Sample ID	**Bottle Count**	**Bottle Type**
NBF-DTS-B-070111	2	2-500 mL AG

Cooler#:	Temperature(°C):	
Sample ID	**Bottle Count**	**Bottle Type**

Cooler#:	Temperature(°C):	
Sample ID	**Bottle Count**	**Bottle Type**

Completed by: JM Date: 7/1/11 Time: 1552

ANALYTICAL RESOURCES INCORPORATED

ORGANICS ANALYSIS DATA SHEET
PCB by GC/ECD Method SW8082

Sample ID: NBF-DTS-A-070111
SAMPLE

Lab Sample ID: TC99A
LIMS ID: 11-14520
Matrix: Wastewater
Data Release Authorized:
Reported: 07/05/11

QC Report No: TC99-The Boeing Company
Project: NBF-LTST
025.082.311.001
Date Sampled: 07/01/11
Date Received: 07/01/11

Date Extracted: 07/01/11
Date Analyzed: 07/05/11 07:26
Instrument/Analyst: ECD5/JGR
GPC Cleanup: No
Sulfur Cleanup: Yes

Sample Amount: 500 mL
Final Extract Volume: 1.0 mL
Dilution Factor: 1.00
Silica Gel: No
Acid Cleanup: Yes

CAS Number	Analyte	RL	Result
12674-11-2	Aroclor 1016	0.10	< 0.10 U
53469-21-9	Aroclor 1242	0.10	< 0.10 U
12672-29-6	Aroclor 1248	0.10	< 0.10 U
11097-69-1	Aroclor 1254	0.10	< 0.10 U
11096-82-5	Aroclor 1260	0.10	< 0.10 U
11104-28-2	Aroclor 1221	0.10	< 0.10 U
11141-16-5	Aroclor 1232	0.10	< 0.10 U
37324-23-5	Aroclor 1262	0.10	< 0.10 U

Reported in µg/L (ppb)

PCB Surrogate Recovery

Decachlorobiphenyl	87.0%
Tetrachlorometaxylene	77.5%

ANALYTICAL RESOURCES INCORPORATED

ORGANICS ANALYSIS DATA SHEET
PCB by GC/ECD Method SW8082

Sample ID: NBF-DTS-B-070111
SAMPLE

Lab Sample ID: TC99B
LIMS ID: 11-14521
Matrix: Wastewater
Data Release Authorized:
Reported: 07/05/11

QC Report No: TC99-The Boeing Company
Project: NBF-LTST
025.082.311.001
Date Sampled: 07/01/11
Date Received: 07/01/11

Date Extracted: 07/01/11
Date Analyzed: 07/05/11 07:45
Instrument/Analyst: ECD5/JGR
GPC Cleanup: No
Sulfur Cleanup: Yes

Sample Amount: 500 mL
Final Extract Volume: 1.0 mL
Dilution Factor: 1.00
Silica Gel: No
Acid Cleanup: Yes

CAS Number	Analyte	RL	Result
12674-11-2	Aroclor 1016	0.10	< 0.10 U
53469-21-9	Aroclor 1242	0.10	< 0.10 U
12672-29-6	Aroclor 1248	0.10	< 0.10 U
11097-69-1	Aroclor 1254	0.10	< 0.10 U
11096-82-5	Aroclor 1260	0.10	< 0.10 U
11104-28-2	Aroclor 1221	0.10	< 0.10 U
11141-16-5	Aroclor 1232	0.10	< 0.10 U
37324-23-5	Aroclor 1262	0.10	< 0.10 U

Reported in µg/L (ppb)

PCB Surrogate Recovery

Decachlorobiphenyl	93.8%
Tetrachlorometaxylene	78.5%

ANALYTICAL RESOURCES INCORPORATED

ORGANICS ANALYSIS DATA SHEET
PCB by GC/ECD Method SW8082

Sample ID: MB-070111
METHOD BLANK

Lab Sample ID: MB-070111
LIMS ID: 11-14520
Matrix: Wastewater
Data Release Authorized:
Reported: 07/05/11

QC Report No: TC99-The Boeing Company
Project: NBF-LTST
025.082.311.001
Date Sampled: NA
Date Received: NA

Date Extracted: 07/01/11
Date Analyzed: 07/05/11 08:04
Instrument/Analyst: ECD5/JGR
GPC Cleanup: No
Sulfur Cleanup: Yes

Sample Amount: 500 mL
Final Extract Volume: 1.0 mL
Dilution Factor: 1.00
Silica Gel: No
Acid Cleanup: Yes

CAS Number	Analyte	RL	Result
12674-11-2	Aroclor 1016	0.10	< 0.10 U
53469-21-9	Aroclor 1242	0.10	< 0.10 U
12672-29-6	Aroclor 1248	0.10	< 0.10 U
11097-69-1	Aroclor 1254	0.10	< 0.10 U
11096-82-5	Aroclor 1260	0.10	< 0.10 U
11104-28-2	Aroclor 1221	0.10	< 0.10 U
11141-16-5	Aroclor 1232	0.10	< 0.10 U
37324-23-5	Aroclor 1262	0.10	< 0.10 U

Reported in µg/L (ppb)

PCB Surrogate Recovery

Decachlorobiphenyl	91.8%
Tetrachlorometaxylene	77.2%

ANALYTICAL RESOURCES INCORPORATED

SW8082/PCB WATER SURROGATE RECOVERY SUMMARY

Matrix: Wastewater

QC Report No: TC99-The Boeing Company
Project: NBF-LTST
025.082.311.001

Client ID	DCBP % REC	DCBP LCL-UCL	TCMX % REC	TCMX LCL-UCL	TOT OUT
MB-070111	91.8%	35-116	77.2%	29-100	0
LCS-070111	87.5%	35-116	74.2%	29-100	0
LCSD-070111	88.2%	35-116	73.0%	29-100	0
NBF-DTS-A-070111	87.0%	10-128	77.5%	25-100	0
NBF-DTS-B-070111	93.8%	10-128	78.5%	25-100	0

Prep Method: SW3510C
Log Number Range: 11-14520 to 11-14521

FORM-II SW8082

ANALYTICAL RESOURCES INCORPORATED

ORGANICS ANALYSIS DATA SHEET
PCB by GC/ECD Method SW8082

Sample ID: LCS-070111
LCS/LCSD

Lab Sample ID: LCS-070111
LIMS ID: 11-14520
Matrix: Wastewater
Data Release Authorized:
Reported: 07/05/11

QC Report No: TC99-The Boeing Company
Project: NBF-LTST
025.082.311.001
Date Sampled: NA
Date Received: NA

Date Extracted LCS/LCSD: 07/01/11

Sample Amount LCS: 500 mL
LCSD: 500 mL

Date Analyzed LCS: 07/05/11 08:23
LCSD: 07/05/11 08:42

Final Extract Volume LCS: 1.0 mL
LCSD: 1.0 mL

Instrument/Analyst LCS: ECD5/JGR
LCSD: ECD5/JGR

Dilution Factor LCS: 1.00
LCSD: 1.00

GPC Cleanup: No
Sulfur Cleanup: Yes

Silica Gel: No
Acid Cleanup: Yes

Analyte	LCS	Spike Added-LCS	LCS Recovery	LCSD	Spike Added-LCSD	LCSD Recovery	RPD
Aroclor 1016	0.731	1.00	73.1%	0.713	1.00	71.3%	2.5%
Aroclor 1260	0.762	1.00	76.2%	0.773	1.00	77.3%	1.4%

PCB Surrogate Recovery

	LCS	LCSD
Decachlorobiphenyl	87.5%	88.2%
Tetrachlorometaxylene	74.2%	73.0%

Results reported in µg/L
RPD calculated using sample concentrations per SW846.

Analytical Resources, Incorporated
Analytical Chemists and Consultants

July 6, 2011

Jeremy Davis
Landau Associates, Inc.
130 Second Ave
Edmonds, WA 98020

RE: Project: NBF – LTST 025.082.311.001
ARI Job: TD05

Dear Jeremy:

Please find enclosed the Chain of Custody (COC) record, sample receipt documentation, and analytical results for the above referenced project. Analytical Resources, Inc. (ARI) accepted two water samples in good condition on July 5, 2011. One cooler was received with temperatures of 11.3°C.

The samples were analyzed for PCBs, as requested on the COC.

The PCB surrogate DCBP is out of control high in the LCSD. The LCSD spike percent recoveries are in control and no further action was required.

There were no other irregularities with the samples.

Quality control analysis results are included for your review. Copies of the reports and all associated raw data will be kept on file electronically at ARI. If you have any questions or require additional information, please contact me at your convenience.

Sincerely,
ANALYTICAL RESOURCES, INC

Kelly Bottem
Client Services Manager
(206) 695-6211
kellyb@arilabs.com
www.arilabs.com

cc: Carl Bach, The Boeing Company, P.O. Box 3707, M/S 1W-12, Seattle, WA 98124-2207

4611 South 134th Place, Suite 100 • Tukwila WA 98168 • **206-695-6200** • **206-695-6201** fax

☑ Seattle/Edmonds (425) 778-0907
☐ Tacoma (253) 926-2493
☐ Spokane (509) 327-9737
☐ Portland (503) 542-1080
☐ _____

LANDAU ASSOCIATES

Chain-of-Custody Record

Date 7/5/2011
Page 1 of 1

Project Name NBF
Project No. 025082.311.001
Project Location/Event Dewatering Treatment System Sampling
Sampler's Name SED/CFB
Project Contact ~~Carl Bach/Kris~~ CFB Jeremy Davis
Send Results To Carl Bach, Joe Kalmar, "

Turnaround Time
☐ Standard
☐ Accelerated
☒ 24-hr

Testing Parameters

Sample I.D.	Date	Time	Matrix	No. of Containers	PCBs*
NBF-DTS-A-070511	7/5/11	1045	water	2	X
NBF-DTS-B-070511	7/5/11	1052	water	2	X

Observations/Comments

X ~~Allow water samples to settle, collect aliquot from clear portion~~ CFB

X ~~NWTPH-Dx - run acid wash/silica gel cleanup~~ CFB

___ run samples standardized to _____ product

___ Analyze for EPH if no specific product identified

VOC/BTEX/VPH (soil):
___ non-preserved
___ preserved w/methanol
___ preserved w/sodium bisulfate
___ *Freeze upon receipt*

___ Dissolved metal water samples field filtered

Other * MCTA PCBs

Special Shipment/Handling or Storage Requirements on ice

Method of Shipment Dropped at ARI

Relinquished by	Received by	Relinquished by	Received by
Signature: Chris Burke	Signature: [signature]	Signature	Signature
Printed Name: [signature]	Printed Name: Jennifer Millsap	Printed Name	Printed Name
Company: LANDAU	Company: ARI	Company	Company
Date 7/5/11 Time 1125	Date 7/5/11 Time 1125	Date Time	Date Time

WHITE COPY - Project File YELLOW COPY - Laboratory PINK COPY - Client Representative

Rev 8/09

Sample ID Cross Reference Report

ANALYTICAL RESOURCES INCORPORATED

ARI Job No: TD05
Client: The Boeing Company
Project Event: 025082.311.001
Project Name: NBF

	Sample ID	ARI Lab ID	ARI LIMS ID	Matrix	Sample Date/Time	VTSR
1.	NBF-DTS-A-070511	TD05A	11-14484	Wastewater	07/05/11 10:45	07/05/11 11:25
2.	NBF-DTS-B-070511	TD05B	11-14485	Wastewater	07/05/11 10:52	07/05/11 11:25

Printed 07/05/11

Analytical Resources, Incorporated
Analytical Chemists and Consultants

Cooler Temperature Compliance Form

TDOS

Cooler#: 1	Temperature(°C): 18.3	
Sample ID	**Bottle Count**	**Bottle Type**
MBF-DTS-A-070511	2	2- 500 mL AG
MBF-DTS-B-070511	2	2- 500 mL AG

Not Sampled 7/5/11 JB

Cooler#:	Temperature(°C):	
Sample ID	**Bottle Count**	**Bottle Type**

Cooler#:	Temperature(°C):	
Sample ID	**Bottle Count**	**Bottle Type**

Cooler#:	Temperature(°C):	
Sample ID	**Bottle Count**	**Bottle Type**

Completed by: JM Date: 7/5/11 Time: 1134

Analytical Resources, Incorporated
Analytical Chemists and Consultants

Cooler Receipt Form

ARI Client: Boeing

COC No(s): _____ (NA)

Assigned ARI Job No: TD05

Project Name: NBF

Delivered by: Fed-Ex UPS Courier Hand Delivered Other: _____

Tracking No: _____ (NA)

Preliminary Examination Phase:

Were intact, properly signed and dated custody seals attached to the outside of to cooler? YES NO

Were custody papers included with the cooler? ..... YES NO

Were custody papers properly filled out (ink, signed, etc.) ..... YES NO

Temperature of Cooler(s) (°C) (recommended 2.0-6.0 °C for chemistry)..... 12.3 ___ ___ ___ ___

If cooler temperature is out of compliance fill out form 00070F

Temp Gun ID#: 90941619

Cooler Accepted by: JM Date: 7/5/11 Time: 1125

Complete custody forms and attach all shipping documents

Log-In Phase:

Was a temperature blank included in the cooler? ..... YES NO

What kind of packing material was used? ... Bubble Wrap Wet Ice Gel Packs Baggies Foam Block Paper Other: _____

Was sufficient ice used (if appropriate)? ..... NA YES NO

Were all bottles sealed in individual plastic bags? ..... YES NO

Did all bottles arrive in good condition (unbroken)? ..... YES NO

Were all bottle labels complete and legible? ..... YES NO

Did the number of containers listed on COC match with the number of containers received? ..... YES NO

Did all bottle labels and tags agree with custody papers? ..... YES NO

Were all bottles used correct for the requested analyses? ..... YES NO

Do any of the analyses (bottles) require preservation? (attach preservation sheet, excluding VOCs)... NA YES NO

Were all VOC vials free of air bubbles? ..... NA YES NO

Was sufficient amount of sample sent in each bottle? ..... YES NO

Date VOC Trip Blank was made at ARI..... NA _____

Was Sample Split by ARI : NA YES Date/Time: _____ Equipment: _____ Split by: _____

Samples Logged by: JM Date: 7/5/11 Time: 1134

***** Notify Project Manager of discrepancies or concerns *****

Sample ID on Bottle	Sample ID on COC	Sample ID on Bottle	Sample ID on COC

Additional Notes, Discrepancies, & Resolutions:

By: Date:

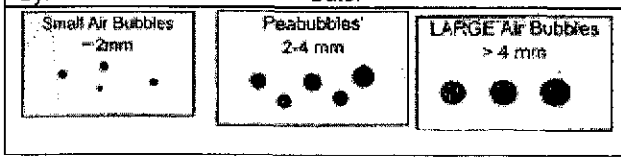

Small → "sm"
Peabubbles → "pb"
Large → "lg"
Headspace → "hs"

ANALYTICAL RESOURCES INCORPORATED

ORGANICS ANALYSIS DATA SHEET
PCB by GC/ECD Method SW8082

Sample ID: NBF-DTS-A-070511
SAMPLE

Lab Sample ID: TD05A
LIMS ID: 11-14484
Matrix: Wastewater
Data Release Authorized:
Reported: 07/06/11

QC Report No: TD05-The Boeing Company
Project: NBF
025082.311.001
Date Sampled: 07/05/11
Date Received: 07/05/11

Date Extracted: 07/05/11
Date Analyzed: 07/05/11 14:27
Instrument/Analyst: ECD5/JGR
GPC Cleanup: No
Sulfur Cleanup: No

Sample Amount: 500 mL
Final Extract Volume: 1.0 mL
Dilution Factor: 1.00
Silica Gel: No
Acid Cleanup: No

CAS Number	Analyte	RL	Result
12674-11-2	Aroclor 1016	0.10	< 0.10 U
53469-21-9	Aroclor 1242	0.10	< 0.10 U
12672-29-6	Aroclor 1248	0.10	< 0.10 U
11097-69-1	Aroclor 1254	0.10	< 0.10 U
11096-82-5	Aroclor 1260	0.10	< 0.10 U
11104-28-2	Aroclor 1221	0.10	< 0.10 U
11141-16-5	Aroclor 1232	0.10	< 0.10 U
37324-23-5	Aroclor 1262	0.10	< 0.10 U

Reported in µg/L (ppb)

PCB Surrogate Recovery

Decachlorobiphenyl	100%
Tetrachlorometaxylene	69.5%

ANALYTICAL RESOURCES INCORPORATED

ORGANICS ANALYSIS DATA SHEET
PCB by GC/ECD Method SW8082

Sample ID: NBF-DTS-B-070511
SAMPLE

Lab Sample ID: TD05B
LIMS ID: 11-14485
Matrix: Wastewater
Data Release Authorized:
Reported: 07/06/11

QC Report No: TD05-The Boeing Company
Project: NBF
025082.311.001
Date Sampled: 07/05/11
Date Received: 07/05/11

Date Extracted: 07/05/11
Date Analyzed: 07/05/11 14:08
Instrument/Analyst: ECD5/JGR
GPC Cleanup: No
Sulfur Cleanup: No

Sample Amount: 500 mL
Final Extract Volume: 1.0 mL
Dilution Factor: 1.00
Silica Gel: No
Acid Cleanup: No

CAS Number	Analyte	RL	Result
12674-11-2	Aroclor 1016	0.10	< 0.10 U
53469-21-9	Aroclor 1242	0.10	< 0.10 U
12672-29-6	Aroclor 1248	0.10	< 0.10 U
11097-69-1	Aroclor 1254	0.10	< 0.10 U
11096-82-5	Aroclor 1260	0.10	< 0.10 U
11104-28-2	Aroclor 1221	0.10	< 0.10 U
11141-16-5	Aroclor 1232	0.10	< 0.10 U
37324-23-5	Aroclor 1262	0.10	< 0.10 U

Reported in µg/L (ppb)

PCB Surrogate Recovery

Decachlorobiphenyl	109%
Tetrachlorometaxylene	77.0%

ANALYTICAL RESOURCES INCORPORATED

ORGANICS ANALYSIS DATA SHEET
PCB by GC/ECD Method SW8082

Sample ID: MB-070511
METHOD BLANK

Lab Sample ID: MB-070511
LIMS ID: 11-14484
Matrix: Wastewater
Data Release Authorized:
Reported: 07/06/11

QC Report No: TD05-The Boeing Company
Project: NBF
025082.311.001
Date Sampled: NA
Date Received: NA

Date Extracted: 07/05/11
Date Analyzed: 07/05/11 14:46
Instrument/Analyst: ECD5/JGR
GPC Cleanup: No
Sulfur Cleanup: No

Sample Amount: 500 mL
Final Extract Volume: 1.0 mL
Dilution Factor: 1.00
Silica Gel: No
Acid Cleanup: No

CAS Number	Analyte	RL	Result
12674-11-2	Aroclor 1016	0.040	< 0.040 U
53469-21-9	Aroclor 1242	0.040	< 0.040 U
12672-29-6	Aroclor 1248	0.040	< 0.040 U
11097-69-1	Aroclor 1254	0.040	< 0.040 U
11096-82-5	Aroclor 1260	0.040	< 0.040 U
11104-28-2	Aroclor 1221	0.040	< 0.040 U
11141-16-5	Aroclor 1232	0.040	< 0.040 U
37324-23-5	Aroclor 1262	0.040	< 0.040 U

Reported in µg/L (ppb)

PCB Surrogate Recovery

Decachlorobiphenyl	98.2%
Tetrachlorometaxylene	78.5%

ANALYTICAL RESOURCES INCORPORATED

SW8082/PCB WATER SURROGATE RECOVERY SUMMARY

Matrix: Wastewater

QC Report No: TD05-The Boeing Company
Project: NBF
025082.311.001

Client ID	DCBP % REC	DCBP LCL-UCL	TCMX % REC	TCMX LCL-UCL	TOT OUT
MB-070511	98.2%	35-116	78.5%	29-100	0
LCS-070511	112%	35-116	81.5%	29-100	0
LCSD-070511	118%*	35-116	79.2%	29-100	1
NBF-DTS-A-070511	100%	10-128	69.5%	25-100	0
NBF-DTS-B-070511	109%	10-128	77.0%	25-100	0

Prep Method: SW3510C
Log Number Range: 11-14484 to 11-14485

FORM-II SW8082

ANALYTICAL RESOURCES INCORPORATED

ORGANICS ANALYSIS DATA SHEET
PCB by GC/ECD Method SW8082

Sample ID: LCS-070511
LCS/LCSD

Lab Sample ID: LCS-070511
LIMS ID: 11-14484
Matrix: Wastewater
Data Release Authorized: MW
Reported: 07/06/11

QC Report No: TD05-The Boeing Company
Project: NBF
025082.311.001
Date Sampled: NA
Date Received: NA

Date Extracted LCS/LCSD: 07/05/11

Date Analyzed LCS: 07/05/11 15:05
LCSD: 07/05/11 15:24
Instrument/Analyst LCS: ECD5/JGR
LCSD: ECD5/JGR
GPC Cleanup: No
Sulfur Cleanup: No

Sample Amount LCS: 500 mL
LCSD: 500 mL
Final Extract Volume LCS: 1.0 mL
LCSD: 1.0 mL
Dilution Factor LCS: 1.00
LCSD: 1.00
Silica Gel: No
Acid Cleanup: No

Analyte	LCS	Spike Added-LCS	LCS Recovery	LCSD	Spike Added-LCSD	LCSD Recovery	RPD
Aroclor 1016	0.793	1.00	79.3%	0.803	1.00	80.3%	1.3%
Aroclor 1260	0.964	1.00	96.4%	1.02	1.00	102%	5.6%

PCB Surrogate Recovery

	LCS	LCSD
Decachlorobiphenyl	112%	118%
Tetrachlorometaxylene	81.5%	79.2%

Results reported in µg/L
RPD calculated using sample concentrations per SW846.

Analytical Resources, Incorporated
Analytical Chemists and Consultants

July 7, 2011

Jeremy Davis
Landau Associates, Inc.
130 Second Ave
Edmonds, WA 98020

RE: Project: NBF – LTST 025.082.311.001
ARI Job: TD21

Dear Jeremy:

Please find enclosed the Chain of Custody (COC) record, sample receipt documentation, and analytical results for the above referenced project. Analytical Resources, Inc. (ARI) accepted two water samples in good condition on July 6, 2011. One cooler was received with temperatures of 18.3°C.

The samples were analyzed for PCBs, as requested on the COC.

The LCS/LCSD RPD for aroclor 1260 is outside of the +/- 40% control limit. The spike recoveries are in control and no action was required.

There were no other irregularities with the samples.

Quality control analysis results are included for your review. Copies of the reports and all associated raw data will be kept on file electronically at ARI. If you have any questions or require additional information, please contact me at your convenience.

Sincerely,
ANALYTICAL RESOURCES, INC

Kelly Bottem
Client Services Manager
(206) 695-6211
kellyb@arilabs.com
www.arilabs.com

cc: Carl Bach, The Boeing Company, P.O. Box 3707, M/S 1W-12, Seattle, WA 98124-2207

4611 South 134th Place, Suite 100 • Tukwila WA 98168 • **206-695-6200** • **206-695-6201** fax

☐ Seattle/Edmonds (425) 778-0907
☐ Tacoma (253) 926-2493
☐ Spokane (509) 327-9737
☐ Portland (503) 542-1080
☐ ____

LANDAU ASSOCIATES

Chain-of-Custody Record

Date 7/6/11

Page 1 of 1

Project Name NBF - LTST Project No. 025-082-311.001

Project Location/Event Dewatering Fluids Treatment

Sampler's Name JMD

Project Contact JMD / Joe Kalmar

Send Results To JMD / Anne H. / Joe Kalmar / Carl B.

Turnaround Time
☐ Standard
☐ Accelerated
☒ 24 hr

Testing Parameters

Sample I.D.	Date	Time	Matrix	No. of Containers	PCBs *
NBF - DTS-A-070611	7/6/11	0925	W	2	X
NBF - DTS - B - 070611	"	0929	W	2	X

Observations/Comments - JMD

X Allow water samples to settle, collect aliquot from clear portion

X NWTPH-Dx - run acid wash/silica gel cleanup

___ run samples standardized to ___ product

___ Analyze for EPH if no specific product identified

VOC/BTEX/VPH (soil):
___ non-preserved
___ preserved w/methanol
___ preserved w/sodium bisulfate
___ Freeze upon receipt

___ Dissolved metal water samples field filtered

Other * MTCA PCBs

Special Shipment/Handling or Storage Requirements

Method of Shipment Drop off @ ARI

Relinquished by	Received by	Relinquished by	Received by
Signature [signature]	Signature [signature]	Signature	Signature
Printed Name SERENA DAVIS	Printed Name A. Volgardsen	Printed Name	Printed Name
Company LAI	Company ARI	Company	Company
Date 7/6/11 Time 1020	Date 7/6/11 Time 1020	Date ___ Time ___	Date ___ Time ___

WHITE COPY - Project File YELLOW COPY - Laboratory PINK COPY - Client Representative

Rev 8/09

Analytical Resources, Incorporated
Analytical Chemists and Consultants

Cooler Receipt Form

ARI Client: Boeing

COC No(s): _____ NA

Assigned ARI Job No: TD21

Project Name: NBF

Delivered by: Fed-Ex UPS Courier Hand Delivered Other: _____

Tracking No: _____ NA

Preliminary Examination Phase:

Were intact, properly signed and dated custody seals attached to the outside of to cooler? YES NO

Were custody papers included with the cooler? YES NO

Were custody papers properly filled out (ink, signed, etc.) YES NO

Temperature of Cooler(s) (°C) (recommended 2.0-6.0 °C for chemistry) 18.3

If cooler temperature is out of compliance fill out form 00070F

Temp Gun ID#: 90941619

Cooler Accepted by: AV Date: 7/6/11 Time: 1020

Complete custody forms and attach all shipping documents

Log-In Phase:

Was a temperature blank included in the cooler? YES NO

What kind of packing material was used? Bubble Wrap Wet Ice Gel Packs Baggies Foam Block Paper Other: _____

Was sufficient ice used (if appropriate)? NA YES NO

Were all bottles sealed in individual plastic bags? YES NO

Did all bottles arrive in good condition (unbroken)? YES NO

Were all bottle labels complete and legible? YES NO

Did the number of containers listed on COC match with the number of containers received? YES NO

Did all bottle labels and tags agree with custody papers? YES NO

Were all bottles used correct for the requested analyses? YES NO

Do any of the analyses (bottles) require preservation? (attach preservation sheet, excluding VOCs)... NA YES NO

Were all VOC vials free of air bubbles? NA YES NO

Was sufficient amount of sample sent in each bottle? YES NO

Date VOC Trip Blank was made at ARI NA _____

Was Sample Split by ARI NA YES Date/Time: _____ Equipment: _____ Split by: _____

Samples Logged by: AV Date: 7/6/11 Time: 1025

***** Notify Project Manager of discrepancies or concerns *****

Sample ID on Bottle	Sample ID on COC	Sample ID on Bottle	Sample ID on COC

Additional Notes, Discrepancies, & Resolutions:

By: Date:

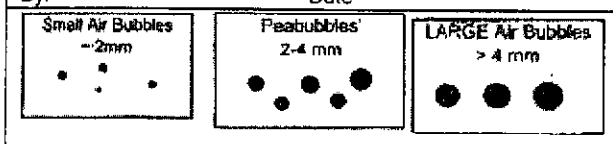

Small → "sm"
Peabubbles → "pb"
Large → "lg"
Headspace → "hs"

Analytical Resources, Incorporated
Analytical Chemists and Consultants

Cooler Temperature Compliance Form

Cooler#: 1 Temperature(°C): 18.3

Sample ID	Bottle Count	Bottle Type
Samples out of temp compliance		

not sampled 7/6/11 KB.

Cooler#: Temperature(°C):

Sample ID	Bottle Count	Bottle Type

Cooler#: Temperature(°C):

Sample ID	Bottle Count	Bottle Type

Cooler#: Temperature(°C):

Sample ID	Bottle Count	Bottle Type

Completed by: AV Date: 7/6/11 Time: 1025

Sample ID Cross Reference Report

ANALYTICAL RESOURCES INCORPORATED

ARI Job No: TD21
Client: The Boeing Company
Project Event: 025.082.311.001
Project Name: NBF

	Sample ID	ARI Lab ID	ARI LIMS ID	Matrix	Sample Date/Time	VTSR
1.	NBF-DTS-A-070611	TD21A	11-14579	Water	07/06/11 09:25	07/06/11 10:20
2.	NBF-DTS-B-070611	TD21B	11-14580	Water	07/06/11 09:29	07/06/11 09:59

Printed 07/06/11

ANALYTICAL RESOURCES INCORPORATED

ORGANICS ANALYSIS DATA SHEET
PCB by GC/ECD Method SW8082

Sample ID: NBF-DTS-A-070611
SAMPLE

Lab Sample ID: TD21A
LIMS ID: 11-14579
Matrix: Water
Data Release Authorized:
Reported: 07/06/11

QC Report No: TD21-The Boeing Company
Project: NBF
025.082.311.001
Date Sampled: 07/06/11
Date Received: 07/06/11

Date Extracted: 07/06/11
Date Analyzed: 07/06/11 12:51
Instrument/Analyst: ECD7/JGR
GPC Cleanup: No
Sulfur Cleanup: No

Sample Amount: 500 mL
Final Extract Volume: 1.0 mL
Dilution Factor: 1.00
Silica Gel: No
Acid Cleanup: No

CAS Number	Analyte	RL	Result
12674-11-2	Aroclor 1016	0.10	< 0.10 U
53469-21-9	Aroclor 1242	0.10	< 0.10 U
12672-29-6	Aroclor 1248	0.10	< 0.10 U
11097-69-1	Aroclor 1254	0.10	< 0.10 U
11096-82-5	Aroclor 1260	0.10	< 0.10 U
11104-28-2	Aroclor 1221	0.10	< 0.10 U
11141-16-5	Aroclor 1232	0.10	< 0.10 U
37324-23-5	Aroclor 1262	0.10	< 0.10 U

Reported in µg/L (ppb)

PCB Surrogate Recovery

Decachlorobiphenyl	82.2%
Tetrachlorometaxylene	68.8%

ANALYTICAL RESOURCES INCORPORATED

ORGANICS ANALYSIS DATA SHEET
PCB by GC/ECD Method SW8082

Sample ID: NBF-DTS-B-070611
SAMPLE

Lab Sample ID: TD21B
LIMS ID: 11-14580
Matrix: Water
Data Release Authorized:
Reported: 07/06/11

QC Report No: TD21-The Boeing Company
Project: NBF
025.082.311.001
Date Sampled: 07/06/11
Date Received: 07/06/11

Date Extracted: 07/06/11
Date Analyzed: 07/06/11 13:14
Instrument/Analyst: ECD7/JGR
GPC Cleanup: No
Sulfur Cleanup: No

Sample Amount: 500 mL
Final Extract Volume: 1.0 mL
Dilution Factor: 1.00
Silica Gel: No
Acid Cleanup: No

CAS Number	Analyte	RL	Result
12674-11-2	Aroclor 1016	0.10	< 0.10 U
53469-21-9	Aroclor 1242	0.10	< 0.10 U
12672-29-6	Aroclor 1248	0.10	< 0.10 U
11097-69-1	Aroclor 1254	0.10	< 0.10 U
11096-82-5	Aroclor 1260	0.10	< 0.10 U
11104-28-2	Aroclor 1221	0.10	< 0.10 U
11141-16-5	Aroclor 1232	0.10	< 0.10 U
37324-23-5	Aroclor 1262	0.10	< 0.10 U

Reported in µg/L (ppb)

PCB Surrogate Recovery

Decachlorobiphenyl	74.8%
Tetrachlorometaxylene	64.2%

ANALYTICAL RESOURCES INCORPORATED

ORGANICS ANALYSIS DATA SHEET
PCB by GC/ECD Method SW8082

Sample ID: MB-070611
METHOD BLANK

Lab Sample ID: MB-070611
LIMS ID: 11-14579
Matrix: Water
Data Release Authorized: MW
Reported: 07/07/11

QC Report No: TD21-The Boeing Company
Project: NBF
025.082.311.001
Date Sampled: NA
Date Received: NA

Date Extracted: 07/06/11
Date Analyzed: 07/06/11 13:36
Instrument/Analyst: ECD7/JGR
GPC Cleanup: No
Sulfur Cleanup: No

Sample Amount: 500 mL
Final Extract Volume: 1.0 mL
Dilution Factor: 1.00
Silica Gel: No
Acid Cleanup: No

CAS Number	Analyte	RL	Result
12674-11-2	Aroclor 1016	0.040	< 0.040 U
53469-21-9	Aroclor 1242	0.040	< 0.040 U
12672-29-6	Aroclor 1248	0.040	< 0.040 U
11097-69-1	Aroclor 1254	0.040	< 0.040 U
11096-82-5	Aroclor 1260	0.040	< 0.040 U
11104-28-2	Aroclor 1221	0.040	< 0.040 U
11141-16-5	Aroclor 1232	0.040	< 0.040 U
37324-23-5	Aroclor 1262	0.040	< 0.040 U

Reported in µg/L (ppb)

PCB Surrogate Recovery	
Decachlorobiphenyl	90.2%
Tetrachlorometaxylene	65.5%

ANALYTICAL RESOURCES INCORPORATED

SW8082/PCB WATER SURROGATE RECOVERY SUMMARY

Matrix: Water

QC Report No: TD21-The Boeing Company
Project: NBF
025.082.311.001

Client ID	DCBP % REC	DCBP LCL-UCL	TCMX % REC	TCMX LCL-UCL	TOT OUT
MB-070611	90.2%	35-116	65.5%	29-100	0
LCS-070611	86.2%	35-116	57.2%	29-100	0
LCSD-070611	42.8%	35-116	37.2%	29-100	0
NBF-DTS-A-070611	82.2%	10-128	68.8%	25-100	0
NBF-DTS-B-070611	74.8%	10-128	64.2%	25-100	0

Prep Method: SW3510C
Log Number Range: 11-14579 to 11-14580

FORM-II SW8082

ANALYTICAL RESOURCES INCORPORATED

ORGANICS ANALYSIS DATA SHEET
PCB by GC/ECD Method SW8082

Sample ID: LCS-070611
LCS/LCSD

Lab Sample ID: LCS-070611
LIMS ID: 11-14579
Matrix: Water
Data Release Authorized:
Reported: 07/07/11

QC Report No: TD21-The Boeing Company
Project: NBF
025.082.311.001
Date Sampled: NA
Date Received: NA

Date Extracted LCS/LCSD: 07/06/11

Date Analyzed LCS: 07/06/11 13:59
LCSD: 07/06/11 14:22
Instrument/Analyst LCS: ECD7/JGR
LCSD: ECD7/JGR
GPC Cleanup: No
Sulfur Cleanup: No

Sample Amount LCS: 500 mL
LCSD: 500 mL
Final Extract Volume LCS: 1.0 mL
LCSD: 1.0 mL
Dilution Factor LCS: 1.00
LCSD: 1.00
Silica Gel: No
Acid Cleanup: No

Analyte	LCS	Spike Added-LCS	LCS Recovery	LCSD	Spike Added-LCSD	LCSD Recovery	RPD
Aroclor 1016	0.639	1.00	63.9%	0.442	1.00	44.2%	36.4%
Aroclor 1260	0.882	1.00	88.2%	0.550	1.00	55.0%	46.4%

PCB Surrogate Recovery

	LCS	LCSD
Decachlorobiphenyl	86.2%	42.8%
Tetrachlorometaxylene	57.2%	37.2%

Results reported in µg/L
RPD calculated using sample concentrations per SW846.

Analytical Resources, Incorporated
Analytical Chemists and Consultants

July 8, 2011

Jeremy Davis
Landau Associates, Inc.
130 Second Ave
Edmonds, WA 98020

RE: Project: NBF – LTST 025.082.311.001
ARI Job: TD32

Dear Jeremy:

Please find enclosed the Chain of Custody (COC) record, sample receipt documentation, and analytical results for the above referenced project. Analytical Resources, Inc. (ARI) accepted two water samples in good condition on July 7, 2011. One cooler was received with temperatures of 15.3°C.

The samples were analyzed for PCBs, as requested on the COC.

There were no irregularities with the samples.

Quality control analysis results are included for your review. Copies of the reports and all associated raw data will be kept on file electronically at ARI. If you have any questions or require additional information, please contact me at your convenience.

Sincerely,
ANALYTICAL RESOURCES, INC

Kelly Bottem
Client Services Manager
(206) 695-6211
kellyb@arilabs.com
www.arilabs.com

cc: Carl Bach, The Boeing Company, P.O. Box 3707, M/S 1W-12, Seattle, WA 98124-2207

4611 South 134th Place, Suite 100 • Tukwila WA 98168 • **206-695-6200** • **206-695-6201** fax

LANDAU ASSOCIATES

☒ Seattle/Edmonds (425) 778-0907
☐ Tacoma (253) 926-2493
☐ Spokane (509) 327-9737
☐ Portland (503) 542-1080
☐

TD32

Date 7/7/11
Page 1 of 1

Chain-of-Custody Record

Project Name NBF-LTST Project No. 0025082.311.001
Project Location/Event Dewatering Fluids Treatment
Sampler's Name Lauren McIntire
Project Contact JMD / Joe Kalmar
Send Results To JMD / Anne Halvorsen / Joe Kalmar / Carl B.

Turnaround Time
☐ Standard
☐ Accelerated
☒ 24 hr

Testing Parameters

Sample I.D.	Date	Time	Matrix	No. of Containers	PCBs ☒
NBF-DTS-A-070711	7/7/11	0822	Water	2	X
NBF-DTS-B-070711	7/7/11	0828	Water	2	X

Observations/Comments

X Allow water samples to settle, collect aliquot from clear portion

X ~~NWTPH-Dx run acid wash/silica gel cleanup~~

___ run samples standardized to _____ product

___ Analyze for EPH if no specific product identified

VOC/BTEX/VPH (soil):
___ non-preserved
___ preserved w/methanol
___ preserved w/sodium bisulfate
___ Freeze upon receipt

___ Dissolved metal water samples field filtered

Other ☒ MTCA PCBs

Special Shipment/Handling or Storage Requirements 1 cooler with Ice

Method of Shipment

Relinquished by	Received by	Relinquished by	Received by
Signature [signature]	Signature [signature]	Signature	Signature
Printed Name Lauren McIntire	Printed Name A. Volgardsen	Printed Name	Printed Name
Company Landau Associates	Company ARI	Company	Company
Date 7-7-11 Time 0858	Date 7/7/11 Time 858	Date Time	Date Time

WHITE COPY - Project File YELLOW COPY - Laboratory PINK COPY - Client Representative

Rev 8/09

Sample ID Cross Reference Report

ANALYTICAL RESOURCES INCORPORATED

ARI Job No: TD32
Client: The Boeing Company
Project Event: 0025082.311.001
Project Name: NBF-LTST

	Sample ID	ARI Lab ID	ARI LIMS ID	Matrix	Sample Date/Time	VTSR
1.	NBF-DTS-A-070711	TD32A	11-14650	Wastewater	07/07/11 08:22	07/07/11 08:58
2.	NBF-DTS-B-070711	TD32B	11-14651	Wastewater	07/07/11 08:28	07/07/11 08:58

Printed 07/07/11

Analytical Resources, Incorporated
Analytical Chemists and Consultants

Cooler Receipt Form

ARI Client: Boeing

COC No(s): _____ (NA)

Assigned ARI Job No: TD32

Project Name: NBF-UST

Delivered by: Fed-Ex UPS Courier Hand Delivered Other: _____

Tracking No: _____ (NA)

Preliminary Examination Phase:

Were intact, properly signed and dated custody seals attached to the outside of to cooler?	YES	NO
Were custody papers included with the cooler?	YES	NO
Were custody papers properly filled out (ink, signed, etc.)	YES	NO

Temperature of Cooler(s) (°C) (recommended *2.0-6.0 °C for chemistry*)..... 15.3 ____ ____ ____ ____ ____

If cooler temperature is out of compliance fill out form 00070F

Temp Gun ID#: 90941619

Cooler Accepted by: AV Date: 7/7/11 Time: 858

Complete custody forms and attach all shipping documents

Log-In Phase:

Was a temperature blank included in the cooler?		YES	NO
What kind of packing material was used? ... Bubble Wrap Wet Ice Gel Packs Baggies Foam Block Paper Other: _____			
Was sufficient ice used (if appropriate)?	NA	YES	NO
Were all bottles sealed in individual plastic bags?		YES	NO
Did all bottles arrive in good condition (unbroken)?		YES	NO
Were all bottle labels complete and legible?		YES	NO
Did the number of containers listed on COC match with the number of containers received?		YES	NO
Did all bottle labels and tags agree with custody papers?		YES	NO
Were all bottles used correct for the requested analyses?		YES	NO
Do any of the analyses (bottles) require preservation? (attach preservation sheet, excluding VOCs)...	NA	YES	NO
Were all VOC vials free of air bubbles?	NA	YES	NO
Was sufficient amount of sample sent in each bottle?		YES	NO
Date VOC Trip Blank was made at ARI	NA	_____	

Was Sample Split by ARI : (NA) YES Date/Time: _____ Equipment: _____ Split by: _____

Samples Logged by: AV Date: 7/7/11 Time: 900

***** Notify Project Manager of discrepancies or concerns *****

Sample ID on Bottle	Sample ID on COC	Sample ID on Bottle	Sample ID on COC

Additional Notes, Discrepancies, & Resolutions:

By: Date:

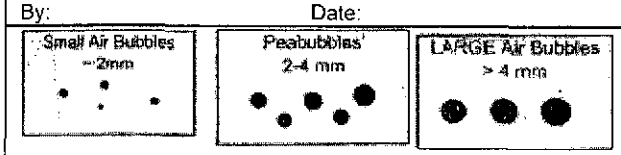

Small → "sm"
Peabubbles → "pb"
Large → "lg"
Headspace → "hs"

Analytical Resources, Incorporated
Analytical Chemists and Consultants

Cooler Temperature Compliance Form

TD32

7/7/11

Cooler#: 1	Temperature(°C): 15.3	
Sample ID	Bottle Count	Bottle Type
All Samples out of temp Compliance.		

Not sampled 7/5

Cooler#:	Temperature(°C):	
Sample ID	Bottle Count	Bottle Type

Cooler#:	Temperature(°C):	
Sample ID	Bottle Count	Bottle Type

Cooler#:	Temperature(°C):	
Sample ID	Bottle Count	Bottle Type

Completed by: AV Date: 7/7/11 Time: 904

ANALYTICAL RESOURCES INCORPORATED

ORGANICS ANALYSIS DATA SHEET
PCB by GC/ECD Method SW8082

Sample ID: NBF-DTS-A-070711
SAMPLE

Lab Sample ID: TD32A
LIMS ID: 11-14650
Matrix: Wastewater
Data Release Authorized:
Reported: 07/08/11

QC Report No: TD32-The Boeing Company
Project: NBF-LTST
0025082.311.001
Date Sampled: 07/07/11
Date Received: 07/07/11

Date Extracted: 07/07/11
Date Analyzed: 07/08/11 09:05
Instrument/Analyst: ECD7/JGR
GPC Cleanup: No
Sulfur Cleanup: No

Sample Amount: 500 mL
Final Extract Volume: 1.0 mL
Dilution Factor: 1.00
Silica Gel: No
Acid Cleanup: No

CAS Number	Analyte	RL	Result
12674-11-2	Aroclor 1016	0.10	< 0.10 U
53469-21-9	Aroclor 1242	0.10	< 0.10 U
12672-29-6	Aroclor 1248	0.10	< 0.10 U
11097-69-1	Aroclor 1254	0.10	< 0.10 U
11096-82-5	Aroclor 1260	0.10	< 0.10 U
11104-28-2	Aroclor 1221	0.10	< 0.10 U
11141-16-5	Aroclor 1232	0.10	< 0.10 U
37324-23-5	Aroclor 1262	0.10	< 0.10 U

Reported in µg/L (ppb)

PCB Surrogate Recovery

Decachlorobiphenyl	72.2%
Tetrachlorometaxylene	70.2%

ANALYTICAL RESOURCES INCORPORATED

ORGANICS ANALYSIS DATA SHEET
PCB by GC/ECD Method SW8082

Sample ID: NBF-DTS-B-070711
SAMPLE

Lab Sample ID: TD32B
LIMS ID: 11-14651
Matrix: Wastewater
Data Release Authorized:
Reported: 07/08/11

QC Report No: TD32-The Boeing Company
Project: NBF-LTST
0025082.311.001
Date Sampled: 07/07/11
Date Received: 07/07/11

Date Extracted: 07/07/11
Date Analyzed: 07/08/11 09:28
Instrument/Analyst: ECD7/JGR
GPC Cleanup: No
Sulfur Cleanup: No

Sample Amount: 500 mL
Final Extract Volume: 1.0 mL
Dilution Factor: 1.00
Silica Gel: No
Acid Cleanup: No

CAS Number	Analyte	RL	Result
12674-11-2	Aroclor 1016	0.10	< 0.10 U
53469-21-9	Aroclor 1242	0.10	< 0.10 U
12672-29-6	Aroclor 1248	0.10	< 0.10 U
11097-69-1	Aroclor 1254	0.10	< 0.10 U
11096-82-5	Aroclor 1260	0.10	< 0.10 U
11104-28-2	Aroclor 1221	0.10	< 0.10 U
11141-16-5	Aroclor 1232	0.10	< 0.10 U
37324-23-5	Aroclor 1262	0.10	< 0.10 U

Reported in µg/L (ppb)

PCB Surrogate Recovery

Decachlorobiphenyl	82.8%
Tetrachlorometaxylene	64.0%

ANALYTICAL RESOURCES INCORPORATED

ORGANICS ANALYSIS DATA SHEET
PCB by GC/ECD Method SW8082

Sample ID: MB-070711
METHOD BLANK

Lab Sample ID: MB-070711
LIMS ID: 11-14650
Matrix: Wastewater
Data Release Authorized:
Reported: 07/08/11

QC Report No: TD32-The Boeing Company
Project: NBF-LTST
0025082.311.001
Date Sampled: NA
Date Received: NA

Date Extracted: 07/07/11
Date Analyzed: 07/08/11 09:51
Instrument/Analyst: ECD7/JGR
GPC Cleanup: No
Sulfur Cleanup: No

Sample Amount: 500 mL
Final Extract Volume: 1.0 mL
Dilution Factor: 1.00
Silica Gel: No
Acid Cleanup: No

CAS Number	Analyte	RL	Result
12674-11-2	Aroclor 1016	0.10	< 0.10 U
53469-21-9	Aroclor 1242	0.10	< 0.10 U
12672-29-6	Aroclor 1248	0.10	< 0.10 U
11097-69-1	Aroclor 1254	0.10	< 0.10 U
11096-82-5	Aroclor 1260	0.10	< 0.10 U
11104-28-2	Aroclor 1221	0.10	< 0.10 U
11141-16-5	Aroclor 1232	0.10	< 0.10 U
37324-23-5	Aroclor 1262	0.10	< 0.10 U

Reported in µg/L (ppb)

PCB Surrogate Recovery

Decachlorobiphenyl	91.8%
Tetrachlorometaxylene	56.2%

ANALYTICAL RESOURCES INCORPORATED

SW8082/PCB WATER SURROGATE RECOVERY SUMMARY

Matrix: Wastewater

QC Report No: TD32-The Boeing Company
Project: NBF-LTST
0025082.311.001

Client ID	DCBP % REC	DCBP LCL-UCL	TCMX % REC	TCMX LCL-UCL	TOT OUT
MB-070711	91.8%	35-116	56.2%	29-100	0
LCS-070711	94.0%	35-116	66.0%	29-100	0
LCSD-070711	92.0%	35-116	62.5%	29-100	0
NBF-DTS-A-070711	72.2%	10-128	70.2%	25-100	0
NBF-DTS-B-070711	82.8%	10-128	64.0%	25-100	0

Prep Method: SW3510C
Log Number Range: 11-14650 to 11-14651

FORM-II SW8082

ANALYTICAL RESOURCES INCORPORATED

ORGANICS ANALYSIS DATA SHEET
PCB by GC/ECD Method SW8082

Sample ID: LCS-070711
LCS/LCSD

Lab Sample ID: LCS-070711
LIMS ID: 11-14650
Matrix: Wastewater
Data Release Authorized:
Reported: 07/08/11

QC Report No: TD32-The Boeing Company
Project: NBF-LTST
0025082.311.001
Date Sampled: NA
Date Received: NA

Date Extracted LCS/LCSD: 07/07/11

Date Analyzed LCS: 07/08/11 10:14
LCSD: 07/08/11 10:37
Instrument/Analyst LCS: ECD7/JGR
LCSD: ECD7/JGR
GPC Cleanup: No
Sulfur Cleanup: No

Sample Amount LCS: 500 mL
LCSD: 500 mL
Final Extract Volume LCS: 1.0 mL
LCSD: 1.0 mL
Dilution Factor LCS: 1.00
LCSD: 1.00
Silica Gel: No
Acid Cleanup: No

Analyte	LCS	Spike Added-LCS	LCS Recovery	LCSD	Spike Added-LCSD	LCSD Recovery	RPD
Aroclor 1016	0.700	1.00	70.0%	0.710	1.00	71.0%	1.4%
Aroclor 1260	0.906	1.00	90.6%	0.890	1.00	89.0%	1.8%

PCB Surrogate Recovery

	LCS	LCSD
Decachlorobiphenyl	94.0%	92.0%
Tetrachlorometaxylene	66.0%	62.5%

Results reported in µg/L
RPD calculated using sample concentrations per SW846.

Analytical Resources, Incorporated
Analytical Chemists and Consultants

July 11, 2011

Jeremy Davis
Landau Associates, Inc.
130 Second Ave
Edmonds, WA 98020

RE: Project: NBF – LTST 025.082.311.001
ARI Job: TD48

Dear Jeremy:

Please find enclosed the Chain of Custody (COC) record, sample receipt documentation, and analytical results for the above referenced project. Analytical Resources, Inc. (ARI) accepted two water samples in good condition on July 8, 2011. One cooler was received with temperatures of 12.4°C.

The samples were analyzed for PCBs, as requested on the COC.

There were no irregularities with the samples.

Quality control analysis results are included for your review. Copies of the reports and all associated raw data will be kept on file electronically at ARI. If you have any questions or require additional information, please contact me at your convenience.

Sincerely,
ANALYTICAL RESOURCES, INC

Kelly Bottem
Client Services Manager
(206) 695-6211
kellyb@arilabs.com
www.arilabs.com

cc: Carl Bach, The Boeing Company, P.O. Box 3707, M/S 1W-12, Seattle, WA 98124-2207

4611 South 134th Place, Suite 100 • Tukwila WA 98168 • **206-695-6200** • **206-695-6201** fax

☒ Seattle/Edmonds (425) 778-0907
☐ Tacoma (253) 926-2493
☐ Spokane (509) 327-9737
☐ Portland (503) 542-1080
☐ _____

LANDAU ASSOCIATES

Chain-of-Custody Record

Date 7/8/11
Page 1 of 1

Project Name NBF - ~~DTST~~
Project No. 025.082.311.001
Project Location/Event NBF-CTST - Dewatering Fluids Treatment Sys.
Sampler's Name JMD
Project Contact JMD / Carl Bach
Send Results To JMD; Anne H.; Carl Bach; Joe K.

Turnaround Time
☐ Standard
☐ Accelerated
☒ RUSH 24 hr

Testing Parameters

Sample I.D.	Date	Time	Matrix	No. of Containers	PCBs
NBF-DTS-A-070811	7/8/11	0920	W	2-500ml Amber	X
NBF-DTS-B-070811	"	0924	W	"	X

Observations/Comments

X Allow water samples to settle, collect aliquot from clear portion JMD

~~X NWTPH-Dx - run acid wash/silica gel cleanup~~ NA

___ run samples standardized to _____ product

___ Analyze for EPH if no specific product identified

VOC/BTEX/VPH (soil):
___ non-preserved
___ preserved w/methanol
___ preserved w/sodium bisulfate
___ Freeze upon receipt

___ Dissolved metal water samples field filtered

Other ☒ MTCA PCBs

Special Shipment/Handling or Storage Requirements

Method of Shipment Drop off @ ARI

Relinquished by	Received by	Relinquished by	Received by
Signature	Signature	Signature	Signature
Jeremy Davis	Jennifer Millsap		
Printed Name	Printed Name	Printed Name	Printed Name
LAI	ARI		
Company	Company	Company	Company
Date 7/8/11 Time 1050	Date 7/8/11 Time 1050	Date ____ Time ____	Date ____ Time ____

WHITE COPY - Project File YELLOW COPY - Laboratory PINK COPY - Client Representative

Rev 8/09

Analytical Resources, Incorporated
Analytical Chemists and Consultants

Cooler Receipt Form

ARI Client: Boeing
COC No(s): _____ (NA)
Assigned ARI Job No: TD4R

Project Name: NBF
Delivered by: Fed-Ex UPS Courier Hand Delivered Other: _____
Tracking No: _____ (NA)

Preliminary Examination Phase:

Were intact, properly signed and dated custody seals attached to the outside of to cooler?	YES	~~NO~~ JM
Were custody papers included with the cooler?	YES	NO
Were custody papers properly filled out (ink, signed, etc.)	YES	NO

Temperature of Cooler(s) (°C) (recommended 2.0-6.0 °C for chemistry)..... 12.4 ___ ___ ___

If cooler temperature is out of compliance fill out form 00070F — Temp Gun ID#: 90941619

Cooler Accepted by: JM Date: 7/8/11 Time: 1050

Complete custody forms and attach all shipping documents

Log-In Phase:

Was a temperature blank included in the cooler?		YES	NO
What kind of packing material was used? ... Bubble Wrap Wet Ice Gel Packs Baggies Foam Block Paper Other: _____			
Was sufficient ice used (if appropriate)?	NA	YES	NO
Were all bottles sealed in individual plastic bags?		YES	NO
Did all bottles arrive in good condition (unbroken)?		YES	NO
Were all bottle labels complete and legible?		YES	NO
Did the number of containers listed on COC match with the number of containers received?		YES	NO
Did all bottle labels and tags agree with custody papers?		YES	NO
Were all bottles used correct for the requested analyses?		YES	NO
Do any of the analyses (bottles) require preservation? (attach preservation sheet, excluding VOCs)...	NA	YES	NO
Were all VOC vials free of air bubbles?	NA	YES	NO
Was sufficient amount of sample sent in each bottle?		YES	NO
Date VOC Trip Blank was made at ARI	NA	_____	

Was Sample Split by ARI : NA YES Date/Time: _____ Equipment: _____ Split by: _____

Samples Logged by: JM Date: 7/8/11 Time: 1056

*** Notify Project Manager of discrepancies or concerns ***

Sample ID on Bottle	Sample ID on COC	Sample ID on Bottle	Sample ID on COC

Additional Notes, Discrepancies, & Resolutions:

By: Date:

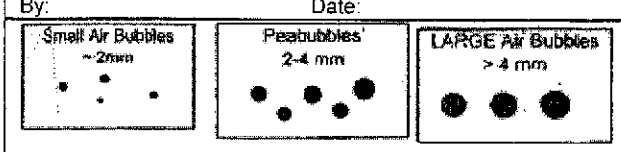

Small → "sm"
Peabubbles → "pb"
Large → "lg"
Headspace → "hs"

Analytical Resources, Incorporated
Analytical Chemists and Consultants

Cooler Temperature Compliance Form

TD48

Cooler#: 1	Temperature(°C): 12.4	
Sample ID	**Bottle Count**	**Bottle Type**
MBF-DTS-A-070811	2	2-500 mL AG
J J B J	2	J

Not sampled 7/8/11 JM

Cooler#:	Temperature(°C):	
Sample ID	**Bottle Count**	**Bottle Type**

Cooler#:	Temperature(°C):	
Sample ID	**Bottle Count**	**Bottle Type**

Cooler#:	Temperature(°C):	
Sample ID	**Bottle Count**	**Bottle Type**

Completed by: JM Date: 7/8/11 Time: 1056

Sample ID Cross Reference Report

ANALYTICAL RESOURCES INCORPORATED

ARI Job No: TD48
Client: The Boeing Company
Project Event: 025.082.311.001
Project Name: NBF

	Sample ID	ARI Lab ID	ARI LIMS ID	Matrix	Sample Date/Time	VTSR
1.	NBF-DTS-A-070811	TD48A	11-14748	Wastewater	07/08/11 09:20	07/08/11 10:50
2.	NBF-DTS-B-070811	TD48B	11-14749	Wastewater	07/08/11 09:24	07/08/11 10:50

Printed 07/08/11

ANALYTICAL RESOURCES INCORPORATED

ORGANICS ANALYSIS DATA SHEET
PCB by GC/ECD Method SW8082

Sample ID: NBF-DTS-A-070811
SAMPLE

Lab Sample ID: TD48A
LIMS ID: 11-14748
Matrix: Wastewater
Data Release Authorized: VD
Reported: 07/11/11

QC Report No: TD48-The Boeing Company
Project: NBF
025.082.311.001
Date Sampled: 07/08/11
Date Received: 07/08/11

Date Extracted: 07/08/11
Date Analyzed: 07/08/11 13:16
Instrument/Analyst: ECD7/JGR
GPC Cleanup: No
Sulfur Cleanup: No

Sample Amount: 500 mL
Final Extract Volume: 1.0 mL
Dilution Factor: 1.00
Silica Gel: No
Acid Cleanup: No

CAS Number	Analyte	RL	Result
12674-11-2	Aroclor 1016	0.10	< 0.10 U
53469-21-9	Aroclor 1242	0.10	< 0.10 U
12672-29-6	Aroclor 1248	0.10	< 0.10 U
11097-69-1	Aroclor 1254	0.10	< 0.10 U
11096-82-5	Aroclor 1260	0.10	< 0.10 U
11104-28-2	Aroclor 1221	0.10	< 0.10 U
11141-16-5	Aroclor 1232	0.10	< 0.10 U
37324-23-5	Aroclor 1262	0.10	< 0.10 U

Reported in µg/L (ppb)

PCB Surrogate Recovery

Decachlorobiphenyl	76.2%
Tetrachlorometaxylene	63.5%

ANALYTICAL RESOURCES INCORPORATED

ORGANICS ANALYSIS DATA SHEET
PCB by GC/ECD Method SW8082

Sample ID: NBF-DTS-B-070811
SAMPLE

Lab Sample ID: TD48B
LIMS ID: 11-14749
Matrix: Wastewater
Data Release Authorized: VT
Reported: 07/11/11

QC Report No: TD48-The Boeing Company
Project: NBF
025.082.311.001
Date Sampled: 07/08/11
Date Received: 07/08/11

Date Extracted: 07/08/11
Date Analyzed: 07/08/11 13:39
Instrument/Analyst: ECD7/JGR
GPC Cleanup: No
Sulfur Cleanup: No

Sample Amount: 500 mL
Final Extract Volume: 1.0 mL
Dilution Factor: 1.00
Silica Gel: No
Acid Cleanup: No

CAS Number	Analyte	RL	Result
12674-11-2	Aroclor 1016	0.10	< 0.10 U
53469-21-9	Aroclor 1242	0.10	< 0.10 U
12672-29-6	Aroclor 1248	0.10	< 0.10 U
11097-69-1	Aroclor 1254	0.10	< 0.10 U
11096-82-5	Aroclor 1260	0.10	< 0.10 U
11104-28-2	Aroclor 1221	0.10	< 0.10 U
11141-16-5	Aroclor 1232	0.10	< 0.10 U
37324-23-5	Aroclor 1262	0.10	< 0.10 U

Reported in µg/L (ppb)

PCB Surrogate Recovery

Decachlorobiphenyl	89.2%
Tetrachlorometaxylene	64.5%

ANALYTICAL RESOURCES INCORPORATED

ORGANICS ANALYSIS DATA SHEET
PCB by GC/ECD Method SW8082

Sample ID: MB-070811
METHOD BLANK

Lab Sample ID: MB-070811
LIMS ID: 11-14748
Matrix: Wastewater
Data Release Authorized: VB
Reported: 07/11/11

QC Report No: TD48-The Boeing Company
Project: NBF
025.082.311.001
Date Sampled: NA
Date Received: NA

Date Extracted: 07/08/11
Date Analyzed: 07/08/11 14:02
Instrument/Analyst: ECD7/JGR
GPC Cleanup: No
Sulfur Cleanup: No

Sample Amount: 500 mL
Final Extract Volume: 1.0 mL
Dilution Factor: 1.00
Silica Gel: No
Acid Cleanup: No

CAS Number	Analyte	RL	Result
12674-11-2	Aroclor 1016	0.10	< 0.10 U
53469-21-9	Aroclor 1242	0.10	< 0.10 U
12672-29-6	Aroclor 1248	0.10	< 0.10 U
11097-69-1	Aroclor 1254	0.10	< 0.10 U
11096-82-5	Aroclor 1260	0.10	< 0.10 U
11104-28-2	Aroclor 1221	0.10	< 0.10 U
11141-16-5	Aroclor 1232	0.10	< 0.10 U
37324-23-5	Aroclor 1262	0.10	< 0.10 U

Reported in µg/L (ppb)

PCB Surrogate Recovery

Decachlorobiphenyl	92.8%
Tetrachlorometaxylene	64.0%

ANALYTICAL RESOURCES INCORPORATED

SW8082/PCB WATER SURROGATE RECOVERY SUMMARY

Matrix: Wastewater

QC Report No: TD48-The Boeing Company
Project: NBF
025.082.311.001

Client ID	DCBP % REC	DCBP LCL-UCL	TCMX % REC	TCMX LCL-UCL	TOT OUT
MB-070811	92.8%	35-116	64.0%	29-100	0
LCS-070811	103%	35-116	71.0%	29-100	0
LCSD-070811	93.2%	35-116	67.2%	29-100	0
NBF-DTS-A-070811	76.2%	10-128	63.5%	25-100	0
NBF-DTS-B-070811	89.2%	10-128	64.5%	25-100	0

Prep Method: SW3510C
Log Number Range: 11-14748 to 11-14749

FORM-II SW8082

ANALYTICAL RESOURCES INCORPORATED

ORGANICS ANALYSIS DATA SHEET
PCB by GC/ECD Method SW8082

Sample ID: LCS-070811
LCS/LCSD

Lab Sample ID: LCS-070811
LIMS ID: 11-14748
Matrix: Wastewater
Data Release Authorized: VJS
Reported: 07/11/11

QC Report No: TD48-The Boeing Company
Project: NBF
025.082.311.001
Date Sampled: NA
Date Received: NA

Date Extracted LCS/LCSD: 07/08/11

Date Analyzed LCS: 07/08/11 14:25
LCSD: 07/08/11 14:48
Instrument/Analyst LCS: ECD7/JGR
LCSD: ECD7/JGR
GPC Cleanup: No
Sulfur Cleanup: No

Sample Amount LCS: 500 mL
LCSD: 500 mL
Final Extract Volume LCS: 1.0 mL
LCSD: 1.0 mL
Dilution Factor LCS: 1.00
LCSD: 1.00
Silica Gel: No
Acid Cleanup: No

Analyte	LCS	Spike Added-LCS	LCS Recovery	LCSD	Spike Added-LCSD	LCSD Recovery	RPD
Aroclor 1016	0.761	1.00	76.1%	0.725	1.00	72.5%	4.8%
Aroclor 1260	0.994	1.00	99.4%	0.923	1.00	92.3%	7.4%

PCB Surrogate Recovery

	LCS	LCSD
Decachlorobiphenyl	103%	93.2%
Tetrachlorometaxylene	71.0%	67.2%

Results reported in µg/L
RPD calculated using sample concentrations per SW846.

Analytical Resources, Incorporated
Analytical Chemists and Consultants

July 18, 2011

Jeremy Davis
Landau Associates, Inc.
130 Second Ave
Edmonds, WA 98020

RE: Project: NBF – LTST 025.082.311.001
ARI Job: TE15

Dear Jeremy:

Please find enclosed the Chain of Custody (COC) record, sample receipt documentation, and analytical results for the above referenced project. Analytical Resources, Inc. (ARI) accepted one water sample in good condition on July 14, 2011. One cooler was received with a temperature of 5.6°C.

The sample was analyzed for PCBs, as requested on the COC.

There were no irregularities with the sample.

Quality control analysis results are included for your review. Copies of the reports and all associated raw data will be kept on file electronically at ARI. If you have any questions or require additional information, please contact me at your convenience.

Sincerely,
ANALYTICAL RESOURCES, INC

Kelly Bottem
Client Services Manager
(206) 695-6211
kellyb@arilabs.com
www.arilabs.com

cc: Carl Bach, The Boeing Company, P.O. Box 3707, M/S 1W-12, Seattle, WA 98124-2207

4611 South 134th Place, Suite 100 • Tukwila WA 98168 • **206-695-6200** • **206-695-6201** fax

☒ Seattle/Edmonds (425) 778-0907
☐ Tacoma (253) 926-2493
☐ Spokane (509) 327-9737
☐ Portland (503) 542-1080
☐ _____

LANDAU ASSOCIATES

TE15

Date 7-14-11
Page 1 of 1

Chain-of-Custody Record

Project Name NBF - LTST Project No. 00250822.311.001
Project Location/Event Dewatering Fluids Treatment
Sampler's Name Lauren McIntire (LKM)
Project Contact JMD / Joe Kalmar
Send Results To JMD / Anne Halvorsen / Joe Kalmar / Karl B.

Turnaround Time
☐ Standard
☐ Accelerated
☒ 72 hours

Testing Parameters

Sample I.D.	Date	Time	Matrix	No. of Containers	☒ PCBs*
NBF-DTS-A-071411	7-14-11	1549	Water	2	X
NBF-DTS-B-071411	7-14-11	1544	Water	2	X

Observations/Comments

X Allow water samples to settle, collect aliquot from clear portion N/A LKM

~~X NWTPH-Dx - run acid wash/silica gel cleanup~~
No clean up required LKM

___ run samples standardized to _____ product

___ Analyze for EPH if no specific product identified

VOC/BTEX/VPH (soil):
___ non-preserved
___ preserved w/methanol
___ preserved w/sodium bisulfate
___ Freeze upon receipt

___ Dissolved metal water samples field filtered

Other ☒ MTCA PCBs

Special Shipment/Handling or Storage Requirements Cooler with ice

Method of Shipment Drop off @ ARI

Relinquished by	Received by	Relinquished by	Received by
Signature [signature]	Signature [signature]	Signature	Signature
Printed Name Lauren McIntire	Printed Name Nichele Bailey	Printed Name	Printed Name
Company Landau Associates	Company ARI	Company	Company
Date 7-14-11 Time 4:35	Date 7/14/2011 Time 16:35	Date ____ Time ____	Date ____ Time ____

WHITE COPY - Project File YELLOW COPY - Laboratory PINK COPY - Client Representative

Rev 8/09

Analytical Resources, Incorporated
Analytical Chemists and Consultants

Cooler Receipt Form

ARI Client: Landau

COC No(s): _____ (NA)

Assigned ARI Job No: TE15

Project Name: NBF-LTST

Delivered by: Fed-Ex UPS Courier Hand Delivered Other: _____

Tracking No: _____ (NA)

Preliminary Examination Phase:

Were intact, properly signed and dated custody seals attached to the outside of to cooler?	YES	(NO)
Were custody papers included with the cooler?	(YES)	NO
Were custody papers properly filled out (ink, signed, etc.)	(YES)	NO

Temperature of Cooler(s) (°C) (recommended 2.0-6.0 °C for chemistry)..... 5.6 ___ ___ ___

If cooler temperature is out of compliance fill out form 00070F

Temp Gun ID#: 90941619

Cooler Accepted by: Nichole Bardley Date: 7/14/2011 Time: 16:35

Complete custody forms and attach all shipping documents

Log-In Phase:

Was a temperature blank included in the cooler? ..... YES (NO)

What kind of packing material was used? ... (Bubble Wrap) (Wet Ice) Gel Packs (Baggies) Foam Block Paper Other: _____

Was sufficient ice used (if appropriate)?	NA	(YES)	NO
Were all bottles sealed in individual plastic bags?		(YES)	NO
Did all bottles arrive in good condition (unbroken)?		(YES)	NO
Were all bottle labels complete and legible?		(YES)	NO
Did the number of containers listed on COC match with the number of containers received?		(YES)	NO
Did all bottle labels and tags agree with custody papers?		(YES)	NO
Were all bottles used correct for the requested analyses?		(YES)	NO
Do any of the analyses (bottles) require preservation? (attach preservation sheet, excluding VOCs)...	(NA)	YES	NO
Were all VOC vials free of air bubbles?	(NA)	YES	NO
Was sufficient amount of sample sent in each bottle?		(YES)	NO
Date VOC Trip Blank was made at ARI	(NA)		

Was Sample Split by ARI : (NA) YES Date/Time: _____ Equipment: _____ Split by: _____

Samples Logged by: AV Date: 7/14/11 Time: 1740

***** Notify Project Manager of discrepancies or concerns *****

Sample ID on Bottle	Sample ID on COC	Sample ID on Bottle	Sample ID on COC

Additional Notes, Discrepancies, & Resolutions:

By: Date:

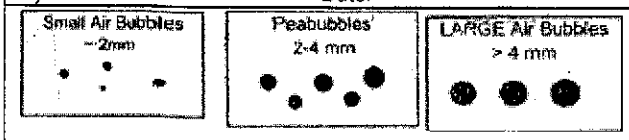

Small → "sm"
Peabubbles → "pb"
Large → "lg"
Headspace → "hs"

Sample ID Cross Reference Report

ANALYTICAL RESOURCES INCORPORATED

ARI Job No: TE15
Client: The Boeing Company
Project Event: 025.082.311.001
Project Name: NBF-LTST

	Sample ID	ARI Lab ID	ARI LIMS ID	Matrix	Sample Date/Time	VTSR
1.	NBF-DTS-A-071411	TE15A	11-15157	Water	07/14/11 15:49	07/14/11 16:32
2.	NBF-DTS-B-071411	TE15B	11-15158	Water	07/14/11 15:44	07/14/11 16:32

Printed 07/15/11

ANALYTICAL RESOURCES INCORPORATED

ORGANICS ANALYSIS DATA SHEET
PCB by GC/ECD Method SW8082

Sample ID: NBF-DTS-A-071411
SAMPLE

Lab Sample ID: TE15A
LIMS ID: 11-15157
Matrix: Water
Data Release Authorized:
Reported: 07/18/11

QC Report No: TE15-The Boeing Company
Project: NBF-LTST
025.082.311.001
Date Sampled: 07/14/11
Date Received: 07/14/11

Date Extracted: 07/15/11
Date Analyzed: 07/16/11 22:24
Instrument/Analyst: ECD7/AAR
GPC Cleanup: No
Sulfur Cleanup: Yes

Sample Amount: 500 mL
Final Extract Volume: 1.0 mL
Dilution Factor: 1.00
Silica Gel: No
Acid Cleanup: Yes

CAS Number	Analyte	RL	Result
12674-11-2	Aroclor 1016	0.10	< 0.10 U
53469-21-9	Aroclor 1242	0.10	< 0.10 U
12672-29-6	Aroclor 1248	0.10	< 0.10 U
11097-69-1	Aroclor 1254	0.10	< 0.10 U
11096-82-5	Aroclor 1260	0.10	< 0.10 U
11104-28-2	Aroclor 1221	0.10	< 0.10 U
11141-16-5	Aroclor 1232	0.10	< 0.10 U
37324-23-5	Aroclor 1262	0.10	< 0.10 U

Reported in µg/L (ppb)

PCB Surrogate Recovery

Decachlorobiphenyl	64.2%
Tetrachlorometaxylene	59.2%

ANALYTICAL RESOURCES INCORPORATED

ORGANICS ANALYSIS DATA SHEET
PCB by GC/ECD Method SW8082

Sample ID: NBF-DTS-B-071411
SAMPLE

Lab Sample ID: TE15B
LIMS ID: 11-15158
Matrix: Water
Data Release Authorized:
Reported: 07/18/11

QC Report No: TE15-The Boeing Company
Project: NBF-LTST
025.082.311.001
Date Sampled: 07/14/11
Date Received: 07/14/11

Date Extracted: 07/15/11
Date Analyzed: 07/16/11 22:47
Instrument/Analyst: ECD7/AAR
GPC Cleanup: No
Sulfur Cleanup: Yes

Sample Amount: 500 mL
Final Extract Volume: 1.0 mL
Dilution Factor: 1.00
Silica Gel: No
Acid Cleanup: Yes

CAS Number	Analyte	RL	Result
12674-11-2	Aroclor 1016	0.10	< 0.10 U
53469-21-9	Aroclor 1242	0.10	< 0.10 U
12672-29-6	Aroclor 1248	0.10	< 0.10 U
11097-69-1	Aroclor 1254	0.10	< 0.10 U
11096-82-5	Aroclor 1260	0.10	< 0.10 U
11104-28-2	Aroclor 1221	0.10	< 0.10 U
11141-16-5	Aroclor 1232	0.10	< 0.10 U
37324-23-5	Aroclor 1262	0.10	< 0.10 U

Reported in µg/L (ppb)

PCB Surrogate Recovery

Decachlorobiphenyl	70.2%
Tetrachlorometaxylene	59.0%

ANALYTICAL RESOURCES INCORPORATED

ORGANICS ANALYSIS DATA SHEET
PCB by GC/ECD Method SW8082

Sample ID: MB-071511
METHOD BLANK

Lab Sample ID: MB-071511
LIMS ID: 11-15157
Matrix: Water
Data Release Authorized: MW
Reported: 07/18/11

QC Report No: TE15-The Boeing Company
Project: NBF-LTST
025.082.311.001
Date Sampled: NA
Date Received: NA

Date Extracted: 07/15/11
Date Analyzed: 07/16/11 21:38
Instrument/Analyst: ECD7/AAR
GPC Cleanup: No
Sulfur Cleanup: Yes

Sample Amount: 500 mL
Final Extract Volume: 1.0 mL
Dilution Factor: 1.00
Silica Gel: No
Acid Cleanup: Yes

CAS Number	Analyte	RL	Result
12674-11-2	Aroclor 1016	0.10	< 0.10 U
53469-21-9	Aroclor 1242	0.10	< 0.10 U
12672-29-6	Aroclor 1248	0.10	< 0.10 U
11097-69-1	Aroclor 1254	0.10	< 0.10 U
11096-82-5	Aroclor 1260	0.10	< 0.10 U
11104-28-2	Aroclor 1221	0.10	< 0.10 U
11141-16-5	Aroclor 1232	0.10	< 0.10 U
37324-23-5	Aroclor 1262	0.10	< 0.10 U

Reported in µg/L (ppb)

PCB Surrogate Recovery

Decachlorobiphenyl	64.0%
Tetrachlorometaxylene	50.2%

ANALYTICAL RESOURCES INCORPORATED

SW8082/PCB WATER SURROGATE RECOVERY SUMMARY

Matrix: Water

QC Report No: TE15-The Boeing Company
Project: NBF-LTST
025.082.311.001

Client ID	DCBP % REC	DCBP LCL-UCL	TCMX % REC	TCMX LCL-UCL	TOT OUT
MB-071511	64.0%	35-116	50.2%	29-100	0
LCS-071511	56.5%	35-116	60.8%	29-100	0
NBF-DTS-A-071411	64.2%	10-128	59.2%	25-100	0
NBF-DTS-B-071411	70.2%	10-128	59.0%	25-100	0

Prep Method: SW3510C
Log Number Range: 11-15157 to 11-15158

FORM-II SW8082

ANALYTICAL RESOURCES INCORPORATED

ORGANICS ANALYSIS DATA SHEET
PCB by GC/ECD Method SW8082

Sample ID: LCS-071511
LAB CONTROL

Lab Sample ID: LCS-071511
LIMS ID: 11-15157
Matrix: Water
Data Release Authorized: MW
Reported: 07/18/11

QC Report No: TE15-The Boeing Company
Project: NBF-LTST
025.082.311.001
Date Sampled: NA
Date Received: NA

Date Extracted: 07/15/11
Date Analyzed: 07/16/11 22:01
Instrument/Analyst: ECD7/AAR
GPC Cleanup: No
Sulfur Cleanup: Yes

Sample Amount: 500 mL
Final Extract Volume: 1.0 mL
Dilution Factor: 1.00
Silica Gel: No
Acid Cleanup: Yes

Analyte	Lab Control	Spike Added	Recovery
Aroclor 1016	0.646	1.00	64.6%
Aroclor 1260	0.693	1.00	69.3%

PCB Surrogate Recovery

Decachlorobiphenyl	56.5%
Tetrachlorometaxylene	60.8%

Results reported in µg/L

Analytical Resources, Incorporated
Analytical Chemists and Consultants

July 26, 2011

Jeremy Davis
Landau Associates, Inc.
130 Second Ave
Edmonds, WA 98020

RE: Project: NBF – LTST 025.082.311.001
ARI Job: TE88

Dear Jeremy:

Please find enclosed the Chain of Custody (COC) record, sample receipt documentation, and analytical results for the above referenced project. Analytical Resources, Inc. (ARI) accepted eight water samples in good condition on July 20, 2011. One cooler was received with a temperature of 5.9°C.
Six samples were received for Oil and Grease analysis and were composited per Landau Associates.

The sample was analyzed for PCBs and Oil and Grease, as requested on the COC.

There were no irregularities with the samples.

Quality control analysis results are included for your review. Copies of the reports and all associated raw data will be kept on file electronically at ARI. If you have any questions or require additional information, please contact me at your convenience.

Sincerely,
ANALYTICAL RESOURCES, INC

Kelly Bottem
Client Services Manager
(206) 695-6211
kellyb@arilabs.com
www.arilabs.com

cc: Carl Bach, The Boeing Company, P.O. Box 3707, M/S 1W-12, Seattle, WA 98124-2207

4611 South 134th Place, Suite 100 • Tukwila WA 98168 • **206-695-6200** • **206-695-6201** fax

TE 88

LANDAU ASSOCIATES

☒ Seattle/Edmonds (425) 778-0907
☐ Tacoma (253) 926-2493
☐ Spokane (509) 327-9737
☐ Portland (503) 542-1080
☐ _____

Chain-of-Custody Record

Date 7/20/11
Page 1 of 1

Project Name NBF-LTST
Project No. 025.082.311.001
Project Location/Event NBF-LTST-DTS
Sampler's Name Jmo
Project Contact Jmo / Carl Beck
Send Results To Jmo / Carl Beck / Joe Kalmer

Turnaround Time
☐ Standard
☐ Accelerated
☒ 72 Hr

Testing Parameters

Sample I.D.	Date	Time	Matrix	No. of Containers	PCBs*	FOG
NBF-DTS-A-072011	7/20/11	1055	W	2	X	
NBF-DTS-A-072011-A		1055		1		I ①
NBF-DTS-A-072011-B		1100		1		
NBF-DTS-A-072011-C		1105		1		
NBF-DTS-B-072011		1115		2	X	
NBF-DTS-B-072011-A		1115		1		I ①
NBF-DTS-B-072011-B		1120		1		
NBF-DTS-B-072011-C		1125		1		

Observations/Comments Not Nec. Jmo

X Allow water samples ~~to settle~~, collect aliquot from clear portion

X NWTPH-Dx - run acid wash/silica gel cleanup NA

___ run samples standardized to _____ product

___ Analyze for EPH if no specific product identified

VOC/BTEX/VPH (soil):
___ non-preserved
___ preserved w/methanol
___ preserved w/sodium bisulfate
___ Freeze upon receipt

___ Dissolved metal water samples field filtered

Other * MTCA PCBs
** Composite FOG samples into 1 as per discussion with Jmo for permit compliance.

Special Shipment/Handling or Storage Requirements

Method of Shipment DROP OFF NBF

Relinquished by	Received by	Relinquished by	Received by
Signature	Signature	Signature	Signature
Jeremy Davis	Jennifer Milsap		
Printed Name	Printed Name	Printed Name	Printed Name
LAA	ARF		
Company	Company	Company	Company
Date 7/20/11 Time 1450	Date 7/20/11 Time 1450	Date ____ Time ____	Date ____ Time ____

WHITE COPY - Project File YELLOW COPY - Laboratory PINK COPY - Client Representative

Rev 8/09

Analytical Resources, Incorporated
Analytical Chemists and Consultants

Cooler Receipt Form

ARI Client: Boeing

COC No(s): _____ (NA)

Assigned ARI Job No. TE88

Project Name: ABF - CTST

Delivered by: Fed-Ex UPS Courier (Hand Delivered) Other: _____

Tracking No. _____ (NA)

Preliminary Examination Phase:

Were intact, properly signed and dated custody seals attached to the outside of to cooler?	(YES)	NO
Were custody papers included with the cooler?	(YES)	NO
Were custody papers properly filled out (ink, signed, etc.)	(YES)	NO
Temperature of Cooler(s) (°C) (recommended 2.0-6.0 °C for chemistry) 5.9		

If cooler temperature is out of compliance fill out form 00070F

Temp Gun ID#: 90941619

Cooler Accepted by: JM Date: 7/20/11 Time: 1450

Complete custody forms and attach all shipping documents

Log-In Phase:

Was a temperature blank included in the cooler?		YES	(NO)
What kind of packing material was used? Bubble Wrap (Wet Ice) Gel Packs Baggies Foam Block Paper Other: _____			
Was sufficient ice used (if appropriate)?	NA	(YES)	NO
Were all bottles sealed in individual plastic bags?		YES	(NO)
Did all bottles arrive in good condition (unbroken)?		(YES)	NO
Were all bottle labels complete and legible?		(YES)	NO
Did the number of containers listed on COC match with the number of containers received?		(YES)	NO
Did all bottle labels and tags agree with custody papers?		(YES)	NO
Were all bottles used correct for the requested analyses?		(YES)	NO
Do any of the analyses (bottles) require preservation? (attach preservation sheet, excluding VOCs)	NA	(YES)	NO
Were all VOC vials free of air bubbles?	(NA)	YES	NO
Was sufficient amount of sample sent in each bottle?		(YES)	NO
Date VOC Trip Blank was made at ARI	(NA)		

Was Sample Split by ARI: (NA) YES Date/Time: _____ Equipment: _____ Split by: _____

Samples Logged by: JM Date: 7/20/11 Time: 1453

***** Notify Project Manager of discrepancies or concerns *****

Sample ID on Bottle	Sample ID on COC	Sample ID on Bottle	Sample ID on COC

Additional Notes, Discrepancies, & Resolutions:

By: _____ Date: _____

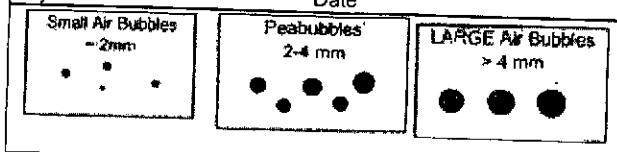

Small → "sm"	
Peabubbles → "pb"	
Large → "lg"	
Headspace → "hs"	

PRESERVATION VERIFICATION 07/20/11

ANALYTICAL RESOURCES INCORPORATED

ARI Job No: **TE88**

Inquiry Number: NONE
Analysis Requested: 07/20/11
Contact: Bach,Carl
Client: The Boeing Company
Logged by: JM
Sample Set Used: Yes-481
Validatable Package: No
Deliverables:

PC: Kelly
VTSR: 07/20/11

Project #: 025.082.311.001
Project: NBF-LTST
Sample Site:
SDG No:
Analytical Protocol: In-house

LOGNUM ARI ID	CLIENT ID	CN >12	WAD >12	NH3 <2	COD <2	FOG <2	MET <2	PHEN <2	PHOS <2	TKN <2	NO23 <2	TOC <2	S2 >9	AK102 <2	Fe2+ <2	DMET FLT	DOC FLT	PARAMETER	ADJUSTED TO	LOT NUMBER	AMOUNT ADDED	DATE/BY
11-15491 **TE88C**	NBF-DTS-A-072011-(A-C)					pass																
11-15492 **TE88D**	NBF-DTS-B-072011-(A-C)					✓																

Checked By JM Date 7/20/11

Sample ID Cross Reference Report

ANALYTICAL RESOURCES INCORPORATED

ARI Job No: TE88
Client: The Boeing Company
Project Event: 025.082.311.001
Project Name: NBF-LTST

	Sample ID	ARI Lab ID	ARI LIMS ID	Matrix	Sample Date/Time	VTSR
1.	NBF-DTS-A-072011	TE88A	11-15489	Water	07/20/11 10:55	07/20/11 14:50
2.	NBF-DTS-B-072011	TE88B	11-15490	Water	07/20/11 11:15	07/20/11 14:50
3.	NBF-DTS-A-072011-(A-C)	TE88C	11-15491	Water	07/20/11 10:55	07/20/11 14:50
4.	NBF-DTS-B-072011-(A-C)	TE88D	11-15492	Water	07/20/11 11:15	07/20/11 14:50

Printed 07/20/11

ANALYTICAL RESOURCES INCORPORATED

ORGANICS ANALYSIS DATA SHEET
PCB by GC/ECD Method SW8082

Sample ID: NBF-DTS-A-072011
SAMPLE

Lab Sample ID: TE88A
LIMS ID: 11-15489
Matrix: Water
Data Release Authorized:
Reported: 07/26/11

QC Report No: TE88-The Boeing Company
Project: NBF-LTST
025.082.311.001
Date Sampled: 07/20/11
Date Received: 07/20/11

Date Extracted: 07/20/11
Date Analyzed: 07/22/11 12:12
Instrument/Analyst: ECD5/JGR
GPC Cleanup: No
Sulfur Cleanup: Yes

Sample Amount: 500 mL
Final Extract Volume: 1.0 mL
Dilution Factor: 1.00
Silica Gel: No
Acid Cleanup: Yes

CAS Number	Analyte	RL	Result
12674-11-2	Aroclor 1016	0.10	< 0.10 U
53469-21-9	Aroclor 1242	0.10	< 0.10 U
12672-29-6	Aroclor 1248	0.10	< 0.10 U
11097-69-1	Aroclor 1254	0.10	< 0.10 U
11096-82-5	Aroclor 1260	0.10	< 0.10 U
11104-28-2	Aroclor 1221	0.10	< 0.10 U
11141-16-5	Aroclor 1232	0.10	< 0.10 U
37324-23-5	Aroclor 1262	0.10	< 0.10 U

Reported in µg/L (ppb)

PCB Surrogate Recovery

Decachlorobiphenyl	74.5%
Tetrachlorometaxylene	65.2%

ANALYTICAL RESOURCES INCORPORATED

ORGANICS ANALYSIS DATA SHEET
PCB by GC/ECD Method SW8082

Sample ID: NBF-DTS-B-072011
SAMPLE

Lab Sample ID: TE88B
LIMS ID: 11-15490
Matrix: Water
Data Release Authorized:
Reported: 07/26/11

QC Report No: TE88-The Boeing Company
Project: NBF-LTST
025.082.311.001
Date Sampled: 07/20/11
Date Received: 07/20/11

Date Extracted: 07/20/11
Date Analyzed: 07/22/11 12:31
Instrument/Analyst: ECD5/JGR
GPC Cleanup: No
Sulfur Cleanup: Yes

Sample Amount: 500 mL
Final Extract Volume: 1.0 mL
Dilution Factor: 1.00
Silica Gel: No
Acid Cleanup: Yes

CAS Number	Analyte	RL	Result
12674-11-2	Aroclor 1016	0.10	< 0.10 U
53469-21-9	Aroclor 1242	0.10	< 0.10 U
12672-29-6	Aroclor 1248	0.10	< 0.10 U
11097-69-1	Aroclor 1254	0.10	< 0.10 U
11096-82-5	Aroclor 1260	0.10	< 0.10 U
11104-28-2	Aroclor 1221	0.10	< 0.10 U
11141-16-5	Aroclor 1232	0.10	< 0.10 U
37324-23-5	Aroclor 1262	0.10	< 0.10 U

Reported in µg/L (ppb)

PCB Surrogate Recovery

Decachlorobiphenyl	72.5%
Tetrachlorometaxylene	58.0%

ANALYTICAL RESOURCES INCORPORATED

ORGANICS ANALYSIS DATA SHEET
PCB by GC/ECD Method SW8082

Sample ID: MB-072011
METHOD BLANK

Lab Sample ID: MB-072011
LIMS ID: 11-15489
Matrix: Water
Data Release Authorized:
Reported: 07/26/11

QC Report No: TE88-The Boeing Company
Project: NBF-LTST
025.082.311.001
Date Sampled: NA
Date Received: NA

Date Extracted: 07/20/11
Date Analyzed: 07/22/11 10:12
Instrument/Analyst: ECD5/JGR
GPC Cleanup: No
Sulfur Cleanup: Yes

Sample Amount: 500 mL
Final Extract Volume: 1.0 mL
Dilution Factor: 1.00
Silica Gel: No
Acid Cleanup: Yes

CAS Number	Analyte	RL	Result
12674-11-2	Aroclor 1016	0.10	< 0.10 U
53469-21-9	Aroclor 1242	0.10	< 0.10 U
12672-29-6	Aroclor 1248	0.10	< 0.10 U
11097-69-1	Aroclor 1254	0.10	< 0.10 U
11096-82-5	Aroclor 1260	0.10	< 0.10 U
11104-28-2	Aroclor 1221	0.10	< 0.10 U
11141-16-5	Aroclor 1232	0.10	< 0.10 U
37324-23-5	Aroclor 1262	0.10	< 0.10 U

Reported in µg/L (ppb)

PCB Surrogate Recovery

Decachlorobiphenyl	76.2%
Tetrachlorometaxylene	59.5%

ANALYTICAL RESOURCES INCORPORATED

SW8082/PCB WATER SURROGATE RECOVERY SUMMARY

Matrix: Water

QC Report No: TE88-The Boeing Company
Project: NBF-LTST
025.082.311.001

Client ID	DCBP % REC	DCBP LCL-UCL	TCMX % REC	TCMX LCL-UCL	TOT OUT
MB-072011	76.2%	39-116	59.5%	29-100	0
LCS-072011	71.5%	39-116	57.8%	29-100	0
LCSD-072011	71.2%	39-116	55.8%	29-100	0
NBF-DTS-A-072011	74.5%	10-128	65.2%	25-100	0
NBF-DTS-B-072011	72.5%	10-128	58.0%	25-100	0

Prep Method: SW3510C
Log Number Range: 11-15489 to 11-15490

FORM-II SW8082

ANALYTICAL RESOURCES INCORPORATED

ORGANICS ANALYSIS DATA SHEET
PCB by GC/ECD Method SW8082

Sample ID: LCS-072011
LCS/LCSD

Lab Sample ID: LCS-072011
LIMS ID: 11-15489
Matrix: Water
Data Release Authorized:
Reported: 07/26/11

QC Report No: TE88-The Boeing Company
Project: NBF-LTST
025.082.311.001
Date Sampled: NA
Date Received: NA

Date Extracted LCS/LCSD: 07/20/11

Date Analyzed LCS: 07/22/11 10:31
LCSD: 07/22/11 10:50
Instrument/Analyst LCS: ECD5/JGR
LCSD: ECD5/JGR
GPC Cleanup: No
Sulfur Cleanup: Yes

Sample Amount LCS: 500 mL
LCSD: 500 mL
Final Extract Volume LCS: 1.0 mL
LCSD: 1.0 mL
Dilution Factor LCS: 1.00
LCSD: 1.00
Silica Gel: No
Acid Cleanup: Yes

Analyte	LCS	Spike Added-LCS	LCS Recovery	LCSD	Spike Added-LCSD	LCSD Recovery	RPD
Aroclor 1016	0.634	1.00	63.4%	0.650	1.00	65.0%	2.5%
Aroclor 1260	0.732	1.00	73.2%	0.731	1.00	73.1%	0.1%

PCB Surrogate Recovery

	LCS	LCSD
Decachlorobiphenyl	71.5%	71.2%
Tetrachlorometaxylene	57.8%	55.8%

Results reported in µg/L
RPD calculated using sample concentrations per SW846.

SAMPLE RESULTS-CONVENTIONALS
TE88-The Boeing Company

ANALYTICAL RESOURCES INCORPORATED

Matrix: Water
Data Release Authorized:
Reported: 07/26/11

Project: NBF-LTST
Event: 025.082.311.001
Date Sampled: 07/20/11
Date Received: 07/20/11

Client ID: NBF-DTS-A-072011-(A-C)
ARI ID: 11-15491 TE88C

Analyte	Date Batch	Method	Units	RL	Sample
HEM Oil & Grease	07/21/11 072111#1	EPA 1664A	mg/L	3.3	< 3.3 U

RL Analytical reporting limit
U Undetected at reported detection limit

SAMPLE RESULTS-CONVENTIONALS
TE88-The Boeing Company

ANALYTICAL RESOURCES INCORPORATED

Matrix: Water
Data Release Authorized:
Reported: 07/26/11

Project: NBF-LTST
Event: 025.082.311.001
Date Sampled: 07/20/11
Date Received: 07/20/11

Client ID: NBF-DTS-B-072011-(A-C)
ARI ID: 11-15492 TE88D

Analyte	Date Batch	Method	Units	RL	Sample
HEM Oil & Grease	07/21/11 072111#1	EPA 1664A	mg/L	3.4	< 3.4 U

RL Analytical reporting limit
U Undetected at reported detection limit

METHOD BLANK RESULTS-CONVENTIONALS
TE88-The Boeing Company

ANALYTICAL RESOURCES INCORPORATED

Matrix: Water
Data Release Authorized:
Reported: 07/26/11

Project: NBF-LTST
Event: 025.082.311.001
Date Sampled: NA
Date Received: NA

Analyte	Method	Date	Units	Blank	ID
HEM Oil & Grease	EPA 1664A	07/21/11	mg/L	< 5.0 U	

LAB CONTROL RESULTS-CONVENTIONALS
TE88-The Boeing Company

ANALYTICAL RESOURCES INCORPORATED

Matrix: Water
Data Release Authorized:
Reported: 07/26/11

Project: NBF-LTST
Event: 025.082.311.001
Date Sampled: NA
Date Received: NA

Analyte/Method	QC ID	Date	Units	LCS	Spike Added	Recovery
HEM Oil & Grease EPA 1664A	ICVL	07/21/11	mg/L	36.4	39.9	91.2%

Analytical Resources, Incorporated
Analytical Chemists and Consultants

August 1, 2011

Jeremy Davis
Landau Associates, Inc.
130 Second Ave
Edmonds, WA 98020

RE: Project: NBF – LTST 025.082.311.001
ARI Job: TG14

Dear Jeremy:

Please find enclosed the Chain of Custody (COC) record, sample receipt documentation, and analytical results for the above referenced project. Analytical Resources, Inc. (ARI) accepted two water samples in good condition on July 29, 2011. One cooler was received with a temperature of 7.8°C.

The samples were analyzed for PCBs, as requested on the COC.

There were no irregularities with the samples.

Quality control analysis results are included for your review. Copies of the reports and all associated raw data will be kept on file electronically at ARI. If you have any questions or require additional information, please contact me at your convenience.

Sincerely,
ANALYTICAL RESOURCES, INC

Kelly Bottem
Client Services Manager
(206) 695-6211
kellyb@arilabs.com
www.arilabs.com

cc: Carl Bach, The Boeing Company, P.O. Box 3707, M/S 1W-12, Seattle, WA 98124-2207

4611 South 134th Place, Suite 100 • Tukwila WA 98168 • **206-695-6200** • **206-695-6201** fax

LANDAU ASSOCIATES

- [x] Seattle/Edmonds (425) 778-0907
- [ ] Tacoma (253) 926-2493
- [ ] Spokane (509) 327-9737
- [ ] Portland (503) 542-1080
- [ ] _____

TG14

Chain-of-Custody Record

Date 7-29-11

Page 1 of 1

Project Name NBF-LTST Project No. 025.082.311.001

Project Location/Event NBF-LTST-DTS

Sampler's Name LKM

Project Contact JMD / Carl Bach

Send Results To JMD/Carl Bach / Jac Kalmar

Turnaround Time
- [ ] Standard
- [x] Accelerated
- ~~X~~ 72 hour

Testing Parameters: RUSH

Sample I.D.	Date	Time	Matrix	No. of Containers	RUSH
NBF-DTS-A-072911	7/29/11	1209	Water	1	X
NBF-DTS-B-072911	7/29/11	1209	Water	1	X

Observations/Comments

X ~~Allow water samples to settle, collect~~ aliquot from clear portion — not necessary

X ~~NWTPH-Dx - run acid wash/silica gel cleanup~~ N/A

___ run samples standardized to _____ product

___ Analyze for EPH if no specific product identified

VOC/BTEX/VPH (soil):
___ non-preserved
___ preserved w/methanol
___ preserved w/sodium bisulfate
___ Freeze upon receipt

___ Dissolved metal water samples field filtered

Other ☆ MTCA PCBs

Special Shipment/Handling or Storage Requirements: Cooler with ice

Method of Shipment: Drop off at AFI

Relinquished by	Received by	Relinquished by	Received by
Signature: [signature]	Signature: [signature]	Signature:	Signature:
Printed Name: Lauren McIntire	Printed Name: Kelly Bolten	Printed Name:	Printed Name:
Company: Landau Associates Inc	Company: AFI	Company:	Company:
Date: 7-29-11 Time: 1247	Date: 7/29/11 Time: 12:47	Date: Time:	Date: Time:

WHITE COPY - Project File YELLOW COPY - Laboratory PINK COPY - Client Representative

Rev 8/09

Analytical Resources, Incorporated
Analytical Chemists and Consultants

Cooler Temperature Compliance Form

Cooler#: 1 Temperature(°C): 7.8

Sample ID	Bottle Count	Bottle Type
NBF-DTS-A-072911	1	1 500ml Ag
NBF-DTS-B-072911	1	"

Sampled 7/29/11

Cooler#: Temperature(°C):

Sample ID	Bottle Count	Bottle Type

Cooler#: Temperature(°C):

Sample ID	Bottle Count	Bottle Type

Cooler#: Temperature(°C):

Sample ID	Bottle Count	Bottle Type

Completed by: AV Date: 7/29/11 Time: 1255

Analytical Resources, Incorporated
Analytical Chemists and Consultants

Cooler Receipt Form

ARI Client: Boeing

COC No(s). _____ NA

Assigned ARI Job No: TG14

Project Name: NBF-LTSI

Delivered by: Fed-Ex UPS Courier Hand Delivered Other: _____

Tracking No. _____ NA

Preliminary Examination Phase:

Were intact, properly signed and dated custody seals attached to the outside of to cooler?	YES	NO
Were custody papers included with the cooler?	YES	NO
Were custody papers properly filled out (ink, signed, etc.)	YES	NO
Temperature of Cooler(s) (°C) (recommended 2.0-6.0 °C for chemistry)	4.1 7.8 HZ	

If cooler temperature is out of compliance fill out form 00070F

Temp Gun ID#: 90941609

Cooler Accepted by: KB (AV) Date: 7/29/11 Time: 1300

Complete custody forms and attach all shipping documents

Log-In Phase:

Was a temperature blank included in the cooler?		YES	NO
What kind of packing material was used?	Bubble Wrap Wet Ice Gel Packs Baggies Foam Block Paper Other: _____		
Was sufficient ice used (if appropriate)?	NA	YES	NO
Were all bottles sealed in individual plastic bags?		YES	NO
Did all bottles arrive in good condition (unbroken)?		YES	NO
Were all bottle labels complete and legible?		YES	NO
Did the number of containers listed on COC match with the number of containers received?		YES	NO
Did all bottle labels and tags agree with custody papers?		YES	NO
Were all bottles used correct for the requested analyses?		YES	NO
Do any of the analyses (bottles) require preservation? (attach preservation sheet, excluding VOCs)	NA	YES	NO
Were all VOC vials free of air bubbles?	NA	YES	NO
Was sufficient amount of sample sent in each bottle?		YES	NO
Date VOC Trip Blank was made at ARI	NA	_____	

Was Sample Split by ARI : NA YES Date/Time: _____ Equipment: _____ Split by: _____

Samples Logged by: AV Date: 7/29/11 Time: 1255

***** Notify Project Manager of discrepancies or concerns *****

Sample ID on Bottle	Sample ID on COC	Sample ID on Bottle	Sample ID on COC

Additional Notes, Discrepancies, & Resolutions:

By: Date:

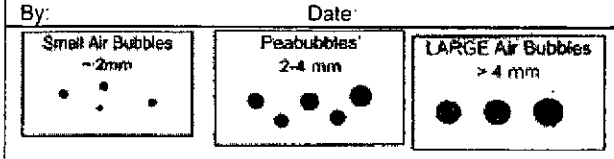

Small → "sm"	
Peabubbles → "pb"	
Large → "lg"	
Headspace → "hs"	

Sample ID Cross Reference Report

ANALYTICAL RESOURCES INCORPORATED

ARI Job No: TG14
Client: The Boeing Company
Project Event: 025.082.311.001
Project Name: NBF-LTST

	Sample ID	ARI Lab ID	ARI LIMS ID	Matrix	Sample Date/Time	VTSR
1.	NBF-DTS-A-072911	TG14A	11-16327	Water	07/29/11 12:09	07/29/11 12:47
2.	NBF-DTS-B-072911	TG14B	11-16328	Water	07/29/11 12:09	07/29/11 12:47

Printed 07/29/11

ANALYTICAL RESOURCES INCORPORATED

ORGANICS ANALYSIS DATA SHEET
PCB by GC/ECD Method SW8082

Sample ID: NBF-DTS-A-072911
SAMPLE

Lab Sample ID: TG14A
LIMS ID: 11-16327
Matrix: Water
Data Release Authorized:
Reported: 08/02/11

QC Report No: TG14-The Boeing Company
Project: NBF-LTST
025.082.311.001
Date Sampled: 07/29/11
Date Received: 07/29/11

Date Extracted: 08/01/11
Date Analyzed: 08/01/11 17:01
Instrument/Analyst: ECD5/JGR
GPC Cleanup: No
Sulfur Cleanup: Yes

Sample Amount: 500 mL
Final Extract Volume: 1.0 mL
Dilution Factor: 1.00
Silica Gel: No
Acid Cleanup: Yes

CAS Number	Analyte	RL	Result
12674-11-2	Aroclor 1016	0.10	< 0.10 U
53469-21-9	Aroclor 1242	0.10	< 0.10 U
12672-29-6	Aroclor 1248	0.10	< 0.10 U
11097-69-1	Aroclor 1254	0.10	< 0.10 U
11096-82-5	Aroclor 1260	0.10	< 0.10 U
11104-28-2	Aroclor 1221	0.10	< 0.10 U
11141-16-5	Aroclor 1232	0.10	< 0.10 U
37324-23-5	Aroclor 1262	0.10	< 0.10 U

Reported in µg/L (ppb)

PCB Surrogate Recovery

Decachlorobiphenyl	86.2%
Tetrachlorometaxylene	67.2%

ANALYTICAL RESOURCES INCORPORATED

ORGANICS ANALYSIS DATA SHEET
PCB by GC/ECD Method SW8082

Sample ID: NBF-DTS-B-072911
SAMPLE

Lab Sample ID: TG14B
LIMS ID: 11-16328
Matrix: Water
Data Release Authorized: VJ
Reported: 08/02/11

QC Report No: TG14-The Boeing Company
Project: NBF-LTST
025.082.311.001
Date Sampled: 07/29/11
Date Received: 07/29/11

Date Extracted: 08/01/11
Date Analyzed: 08/01/11 17:20
Instrument/Analyst: ECD5/JGR
GPC Cleanup: No
Sulfur Cleanup: Yes

Sample Amount: 500 mL
Final Extract Volume: 1.0 mL
Dilution Factor: 1.00
Silica Gel: No
Acid Cleanup: Yes

CAS Number	Analyte	RL	Result
12674-11-2	Aroclor 1016	0.10	< 0.10 U
53469-21-9	Aroclor 1242	0.10	< 0.10 U
12672-29-6	Aroclor 1248	0.10	< 0.10 U
11097-69-1	Aroclor 1254	0.10	< 0.10 U
11096-82-5	Aroclor 1260	0.10	< 0.10 U
11104-28-2	Aroclor 1221	0.10	< 0.10 U
11141-16-5	Aroclor 1232	0.10	< 0.10 U
37324-23-5	Aroclor 1262	0.10	< 0.10 U

Reported in µg/L (ppb)

PCB Surrogate Recovery

Decachlorobiphenyl	84.8%
Tetrachlorometaxylene	58.2%

ANALYTICAL RESOURCES INCORPORATED

ORGANICS ANALYSIS DATA SHEET
PCB by GC/ECD Method SW8082

Sample ID: MB-080111
METHOD BLANK

Lab Sample ID: MB-080111
LIMS ID: 11-16327
Matrix: Water
Data Release Authorized: VT
Reported: 08/02/11

QC Report No: TG14-The Boeing Company
Project: NBF-LTST
025.082.311.001
Date Sampled: NA
Date Received: NA

Date Extracted: 08/01/11
Date Analyzed: 08/01/11 16:04
Instrument/Analyst: ECD5/JGR
GPC Cleanup: No
Sulfur Cleanup: Yes

Sample Amount: 500 mL
Final Extract Volume: 1.0 mL
Dilution Factor: 1.00
Silica Gel: No
Acid Cleanup: Yes

CAS Number	Analyte	RL	Result
12674-11-2	Aroclor 1016	0.10	< 0.10 U
53469-21-9	Aroclor 1242	0.10	< 0.10 U
12672-29-6	Aroclor 1248	0.10	< 0.10 U
11097-69-1	Aroclor 1254	0.10	< 0.10 U
11096-82-5	Aroclor 1260	0.10	< 0.10 U
11104-28-2	Aroclor 1221	0.10	< 0.10 U
11141-16-5	Aroclor 1232	0.10	< 0.10 U
37324-23-5	Aroclor 1262	0.10	< 0.10 U

Reported in µg/L (ppb)

PCB Surrogate Recovery

Decachlorobiphenyl	82.5%
Tetrachlorometaxylene	61.0%

ANALYTICAL RESOURCES INCORPORATED

SW8082/PCB WATER SURROGATE RECOVERY SUMMARY

Matrix: Water

QC Report No: TG14-The Boeing Company
Project: NBF-LTST
025.082.311.001

Client ID	DCBP % REC	DCBP LCL-UCL	TCMX % REC	TCMX LCL-UCL	TOT OUT
MB-080111	82.5%	39-116	61.0%	29-100	0
LCS-080111	86.2%	39-116	62.2%	29-100	0
LCSD-080111	83.8%	39-116	60.5%	29-100	0
NBF-DTS-A-072911	86.2%	10-128	67.2%	25-100	0
NBF-DTS-B-072911	84.8%	10-128	58.2%	25-100	0

Prep Method: SW3510C
Log Number Range: 11-16327 to 11-16328

FORM-II SW8082

ANALYTICAL RESOURCES INCORPORATED

ORGANICS ANALYSIS DATA SHEET
PCB by GC/ECD Method SW8082

Sample ID: LCS-080111
LCS/LCSD

Lab Sample ID: LCS-080111
LIMS ID: 11-16327
Matrix: Water
Data Release Authorized: VB
Reported: 08/02/11

QC Report No: TG14-The Boeing Company
Project: NBF-LTST
025.082.311.001
Date Sampled: NA
Date Received: NA

Date Extracted LCS/LCSD: 08/01/11

Date Analyzed LCS: 08/01/11 16:23
LCSD: 08/01/11 16:42
Instrument/Analyst LCS: ECD5/JGR
LCSD: ECD5/JGR
GPC Cleanup: No
Sulfur Cleanup: Yes

Sample Amount LCS: 500 mL
LCSD: 500 mL
Final Extract Volume LCS: 1.0 mL
LCSD: 1.0 mL
Dilution Factor LCS: 1.00
LCSD: 1.00
Silica Gel: No
Acid Cleanup: Yes

Analyte	LCS	Spike Added-LCS	LCS Recovery	LCSD	Spike Added-LCSD	LCSD Recovery	RPD
Aroclor 1016	0.618	1.00	61.8%	0.656	1.00	65.6%	6.0%
Aroclor 1260	0.821	1.00	82.1%	0.829	1.00	82.9%	1.0%

PCB Surrogate Recovery

	LCS	LCSD
Decachlorobiphenyl	86.2%	83.8%
Tetrachlorometaxylene	62.2%	60.5%

Results reported in µg/L
RPD calculated using sample concentrations per SW846.

11BOE1 History											
	Level (in)	Rain 15 Min Total		0.01	Rain 1 Hour Total			0.01	Rain 24 Hour Total		0.01
Date (mm/dd)	Time (HH:MM)	Flow In (gal)	Tur In (NTU)	pH In	Flow Out (gal)	Flow Out (gpm)	Tur Out (NTU)	pH Out	Flow Rec (gal)	Tur Rec (NTU)	pH Rec
7/09	23:15	8150	127.7	7.12	2959	208	1.7	7.10	4	1.7	7.12
7/09	23:00	8606	133.6	7.08	3127	209	1.7	7.09	0	0.0	0.00
7/09	22:45	8638	134.1	7.12	3174	212	1.6	7.09	0	0.0	0.00
7/09	22:30	8680	142.9	7.07	3184	213	1.5	7.05	0	0.0	0.00
7/09	22:15	6953	149.9	7.06	2465	214	1.4	7.06	197	1.6	7.11
7/09	19:45	8399	115.5	7.13	3015	215	1.7	7.11	322	4.4	7.11
7/09	19:15	8746	124.5	7.11	3263	217	1.7	7.09	0	0.0	0.00
7/09	17:15	4349	104.3	7.14	1657	222	1.9	7.13	88	1.9	7.14
7/09	17:00	8700	110.3	7.11	3316	221	1.9	7.13	0	0.0	0.00
7/09	16:45	8753	113.6	7.14	3334	223	2.2	7.12	0	0.0	0.00
7/09	16:30	8814	128.3	7.09	3375	224	1.9	7.09	0	0.0	0.00
7/09	16:15	2689	138.4	7.09	978	229	1.6	7.09	131	2.0	7.14
7/09	14:15	8787	94.0	7.17	3374	225	1.8	7.19	0	0.0	0.00
7/09	14:00	8827	93.8	7.15	3393	226	2.0	7.16	0	0.0	0.00
7/09	13:45	8901	98.3	7.11	3253	228	2.0	7.14	382	6.5	7.17
7/09	13:30	9591	102.8	7.13	583	212	0.5	7.07	5541	25.7	7.13
7/09	13:15	5929	107.6	7.08	2135	214	0.6	7.07	215	0.7	7.13
7/09	11:45	1684	72.6	7.16	637	214	0.5	7.15	35	0.6	7.15
7/09	11:30	8422	75.9	7.13	3230	216	0.5	7.11	0	0.0	0.00
7/09	11:15	8543	78.8	7.11	3220	215	0.6	7.12	0	0.0	0.00
7/09	11:00	8622	82.6	7.11	3214	215	0.5	7.08	0	0.0	0.00
7/09	9:15	145	60.6	7.24	56	218	0.6	7.21	0	0.7	7.21
7/09	9:00	8610	58.6	7.20	3272	219	0.5	7.18	0	0.0	0.00
7/09	8:45	8677	62.5	7.14	3278	219	0.5	7.13	0	0.0	0.00
7/09	8:30	3497	74.2	7.12	1281	222	0.9	7.13	108	0.6	7.15
7/09	8:15	6977	61.1	7.11	2633	220	0.5	7.14	0	0.6	7.16
7/09	8:00	8764	65.7	7.07	3302	220	0.5	7.12	0	0.0	0.00
7/09	7:45	8908	61.4	7.10	3305	220	0.5	7.13	0	0.0	0.00

7/09	7:30	8965	67.9	7.06	3324	222	0.5	7.10	0	0.0	0.00
7/09	7:15	9062	68.7	7.07	3302	221	0.4	7.11	0	0.0	0.00
7/09	7:00	9260	73.5	7.01	3400	226	0.4	7.09	0	0.0	0.00
7/09	6:45	9363	81.0	6.98	3431	229	0.4	7.07	0	0.0	0.00
7/09	6:30	9405	90.1	6.96	3450	229	0.3	7.05	0	0.0	0.00
7/09	6:15	9398	103.4	6.95	3472	232	0.3	7.05	0	0.0	0.00
7/09	6:00	8908	106.6	6.90	3285	231	0.3	7.06	79	0.6	7.25
7/09	3:45	73	98.1	7.07	0	0	0.0	0.00	0	0.7	7.32
7/09	3:30	290	120.0	7.13	21	57	0.7	7.30	0	0.7	7.31
7/09	3:00	621	93.7	7.08	131	28	0.6	7.32	0	0.7	7.31
7/09	2:45	1976	93.1	7.12	440	30	0.6	7.31	0	0.0	0.00
7/09	2:30	1991	91.4	7.11	448	30	0.6	7.31	0	0.0	0.00
7/09	2:15	1976	91.2	7.10	445	30	0.6	7.31	0	0.0	0.00
7/09	2:00	2003	87.8	7.14	467	31	0.6	7.31	0	0.0	0.00
7/09	1:45	2013	87.2	7.12	362	31	0.6	7.31	0	0.6	7.30
7/09	1:30	1054	92.2	7.19	19	46	0.8	7.31	10	0.6	7.31
		282719	**95.85**	**7.10**	**100000**		**0.97**	**7.15**			
7/08	23:15	7746	59.6	7.50	0	0	0.3	7.31	0	0.0	7.30
7/08	23:00	7823	105.9	7.33	2581	174	0.6	7.37	0	0.0	0.00
7/08	22:45	743	110.2	7.67	268	217	2.2	7.66	114	4.1	7.68
7/08	20:30	2860	80.3	7.76	1222	196	4.0	7.71	0	3.9	7.71
7/08	20:15	7259	86.7	7.73	717	205	4.7	7.74	4870	5.8	7.71
7/08	20:00	7611	62.1	7.82	0	0	0.0	0.00	5913	5.7	7.75
7/08	19:45	7304	84.9	7.78	0	0	0.0	0.00	5856	4.9	7.74
7/08	19:30	658	126.0	7.92	0	0	0.0	0.00	578	3.4	7.78
7/08	18:45	373	52.0	7.86	0	0	0.0	0.00	315	3.8	7.82
7/08	18:30	6350	54.4	7.87	0	0	0.0	0.00	5479	3.7	7.81
7/08	18:15	3137	59.4	7.91	0	0	0.0	0.00	2660	3.7	7.80
7/08	18:00	935	76.3	7.93	0	0	0.0	0.00	750	3.9	7.79
7/08	17:45	5530	56.8	7.83	0	0	0.0	0.00	4718	4.0	7.78
7/08	17:30	7374	60.4	7.78	0	0	0.0	0.00	6156	4.4	7.73
7/08	17:15	7547	69.4	7.73	0	0	0.0	0.00	6282	4.8	7.69
7/08	17:00	1180	86.2	7.92	0	0	0.0	0.00	1004	3.0	7.73

7/08	15:15	0	68.5	7.71	0	0	0.0	0.00	2240	4.2	7.72
7/08	15:00	0	67.9	7.72	0	0	0.0	0.00	4511	4.2	7.72
7/08	14:45	0	71.7	7.73	0	0	0.0	0.00	989	4.3	7.72
7/08	13:00	150	76.1	7.84	0	0	0.0	0.00	225	4.3	7.78
7/08	12:45	5318	78.5	7.89	0	0	0.0	0.00	4583	3.4	7.85
7/08	12:30	280	121.3	8.09	0	0	0.0	0.00	235	3.3	8.06
7/08	10:15	4044	50.3	8.17	3417	236	3.4	8.10	5	3.4	8.12
7/08	10:00	8466	39.7	8.11	3574	238	3.3	8.04	0	0.0	0.00
7/08	9:45	8534	38.9	8.04	3530	240	2.8	7.99	121	2.9	7.99
7/08	9:30	8595	40.5	8.01	3548	241	3.0	7.96	130	3.2	7.96
7/08	9:15	9018	41.7	7.98	852	244	3.0	7.94	5992	3.3	7.93
7/08	9:00	9386	42.7	7.93	0	0	0.0	0.00	8062	3.4	7.89
7/08	8:45	9667	44.8	7.88	0	0	0.0	0.00	8308	3.5	7.84
7/08	8:30	9702	47.7	7.83	0	0	0.0	0.00	8313	3.7	7.79
7/08	8:15	9717	52.3	7.78	0	0	0.0	0.00	8352	3.9	7.74
7/08	8:00	10002	57.4	7.72	0	0	0.0	0.00	8098	3.9	7.69
7/08	7:45	9781	64.6	7.66	0	0	0.0	0.00	7247	3.6	7.60
		177090	**67.73**	**7.83**	**19708**		**3.00**	**7.78**			
7/07	15:30	628	68.0	7.47	0	0	0.0	0.00	541	2.4	7.42
7/07	15:15	3089	90.8	7.37	0	0	0.0	0.00	2658	2.0	7.31
7/07	15:00	9466	69.0	7.72	0	0	0.0	0.00	8223	4.1	7.74
7/07	14:45	7964	48.1	8.14	0	0	0.0	0.00	6904	5.9	8.14
7/07	13:45	7608	50.1	8.41	0	0	0.0	0.00	6644	7.6	8.36
7/07	13:30	10411	62.3	8.39	0	0	0.0	0.00	7526	8.6	2.47
7/07	13:15	9517	45.9	8.41	0	0	0.0	0.00	8297	8.6	6.06
7/07	13:00	9514	49.9	8.38	0	0	0.0	0.00	8288	9.4	8.31
7/07	12:45	10524	59.8	8.34	0	0	0.0	0.00	7325	9.6	8.28
7/07	12:30	9495	72.8	8.31	0	0	0.0	0.00	8166	13.2	8.24
7/07	12:15	782	84.0	8.31	0	0	0.0	0.00	665	13.7	8.23
7/07	11:45	4650	56.5	8.34	0	0	0.0	0.00	3944	14.1	8.26
7/07	11:30	9234	62.0	8.32	0	0	0.0	0.00	7804	15.1	8.24
7/07	11:15	8543	78.8	7.11	3220	215	0.6	7.12	0	0.0	0.00
7/07	10:45	1168	102.6	8.25	0	0	0.0	0.00	3592	16.5	8.17

7/07	10:30	0	85.3	8.27	0	0	0.0	0.00	5232	14.5	8.18
7/07	10:15	4044	50.3	8.17	3417	236	3.4	8.10	5	3.4	8.12
7/07	10:00	7473	123.3	8.19	0	0	0.0	0.00	4399	12.6	8.12
7/07	9:00	7750	136.4	8.17	0	0	0.0	0.00	5267	2.2	8.10
7/07	8:45	9026	33.9	8.11	2834	236	1.0	8.05	1236	1.2	8.07
7/07	8:30	8720	34.7	8.08	3606	241	1.1	8.02	0	0.0	0.00
7/07	8:15	5749	39.4	8.06	2305	244	1.2	8.01	132	1.2	8.00
7/07	8:00	9096	46.8	8.05	0	0	0.0	0.00	7836	1.2	8.00
7/07	7:45	9290	51.0	8.01	0	0	0.0	0.00	7872	1.4	7.96
7/07	7:30	1664	60.7	7.89	0	0	0.0	0.00	1366	1.5	7.73
		165405	**66.50**	**8.09**	**15381**		**1.46**	**7.86**			
7/06	16:30	8814	128.3	7.09	3375	224	1.9	7.09	0	0.0	0.00
7/06	16:15	2689	138.4	7.09	978	229	1.6	7.09	131	2.0	7.14
7/06	13:45	8901	98.3	7.11	3253	228	2.0	7.14	382	6.5	7.17
7/06	13:30	9591	102.8	7.13	583	212	0.5	7.07	5541	25.7	7.13
7/06	13:15	5929	107.6	7.08	2135	214	0.6	7.07	215	0.7	7.13
7/06	11:45	6459	82.2	8.00	1140	240	1.8	7.96	2502	2.3	7.92
7/06	11:30	9478	80.7	7.90	1957	237	1.2	7.82	2720	1.7	7.87
7/06	11:15	8464	103.6	7.83	3423	240	1.4	7.78	387	1.7	7.75
7/06	11:00	9140	171.2	7.77	0	0	0.0	0.00	7601	2.6	7.71
7/06	10:45	5914	125.2	7.77	0	0	0.0	0.00	570	3.1	7.74
7/06	10:30	2849	58.7	7.96	0	0	1.0	7.89	0	0.9	7.91
7/06	10:15	8199	44.1	7.88	0	0	1.1	7.82	0	0.0	0.00
7/06	10:00	8613	31.2	7.77	0	0	1.3	7.73	0	0.0	0.00
7/06	9:45	8755	24.7	7.71	0	0	1.5	7.67	0	0.0	0.00
7/06	9:30	4121	23.6	7.68	0	0	1.6	7.64	0	1.3	7.64
7/06	8:45	3649	24.2	7.67	0	0	0.0	0.00	1798	1.4	7.63
7/06	8:30	10175	26.1	7.65	0	0	0.0	0.00	7339	1.1	7.61
7/06	8:15	9238	30.7	7.61	0	0	0.0	0.00	9446	0.9	7.58
7/06	8:00	6389	35.4	7.65	0	0	0.0	0.00	5490	1.0	7.63
7/06	7:45	3147	45.2	7.71	0	0	0.0	0.00	0	6.7	7.56
		140514	**74.11**	**7.60**	**16842**		**1.38**	**7.38**			

7/05	17:00	1180	86.2	7.92	0	0	0.0	0.00	1004	3.0	7.73
7/05	15:15	0	68.5	7.71	0	0	0.0	0.00	2240	4.2	7.72
7/05	15:00	0	67.9	7.72	0	0	0.0	0.00	4511	4.2	7.72
7/05	14:45	0	71.7	7.73	0	0	0.0	0.00	989	4.3	7.72
7/05	12:45	10524	59.8	8.34	0	0	0.0	0.00	7325	9.6	8.28
7/05	12:30	9495	72.8	8.31	0	0	0.0	0.00	8166	13.2	8.24
7/05	12:15	782	84.0	8.31	0	0	0.0	0.00	665	13.7	8.23
7/05	11:30	9234	62.0	8.32	0	0	0.0	0.00	7804	15.1	8.24
7/05	11:15	8925	71.2	8.29	0	0	0.0	0.00	7560	14.9	8.20
7/05	11:00	10299	85.2	8.26	0	0	0.0	0.00	6677	17.4	8.17
7/05	10:45	1168	102.6	8.25	0	0	0.0	0.00	3592	16.5	8.17
7/05	10:00	8466	39.7	8.11	3574	238	3.3	8.04	0	0.0	0.00
7/05	9:45	8534	38.9	8.04	3530	240	2.8	7.99	121	2.9	7.99
7/05	9:30	8595	40.5	8.01	3548	241	3.0	7.96	130	3.2	7.96
7/05	9:00	7750	136.4	8.17	0	0	0.0	0.00	5267	2.2	8.10
7/05	8:45	9026	33.9	8.11	2834	236	1.0	8.05	1236	1.2	8.07
7/05	8:30	8720	34.7	8.08	3606	241	1.1	8.02	0	0.0	0.00
7/05	8:15	9238	30.7	7.61	0	0	0.0	0.00	9446	0.9	7.58
7/05	8:00	6389	35.4	7.65	0	0	0.0	0.00	5490	1.0	7.63
		118325	**64.32**	**8.05**	**17092**		**2.24**	**8.01**			
7/01	19:15	8746	124.5	7.11	3263	217	1.7	7.09	0	0.0	0.00
7/01	18:45	373	52.0	7.86	0	0	0.0	0.00	315	3.8	7.82
7/01	18:30	6350	54.4	7.87	0	0	0.0	0.00	5479	3.7	7.81
7/01	18:15	3137	59.4	7.91	0	0	0.0	0.00	2660	3.7	7.80
7/01	18:00	935	76.3	7.93	0	0	0.0	0.00	750	3.9	7.79
7/01	17:45	5530	56.8	7.83	0	0	0.0	0.00	4718	4.0	7.78
7/01	17:30	7374	60.4	7.78	0	0	0.0	0.00	6156	4.4	7.73
7/01	17:15	7547	69.4	7.73	0	0	0.0	0.00	6282	4.8	7.69
7/01	17:00	1180	86.2	7.92	0	0	0.0	0.00	1004	3.0	7.73
7/01	15:00	9466	69.0	7.72	0	0	0.0	0.00	8223	4.1	7.74
7/01	14:45	7964	48.1	8.14	0	0	0.0	0.00	6904	5.9	8.14
7/01	14:15	8787	94.0	7.17	3374	225	1.8	7.19	0	0.0	0.00
7/01	14:00	8827	93.8	7.15	3393	226	2.0	7.16	0	0.0	0.00

7/01	13:45	8901	98.3	7.11	3253	228	2.0	7.14	382	6.5	7.17
7/01	13:30	9591	102.8	7.13	583	212	0.5	7.07	5541	25.7	7.13
7/01	12:15	782	84.0	8.31	0	0	0.0	0.00	665	13.7	8.23
7/01	11:45	4650	56.5	8.34	0	0	0.0	0.00	3944	14.1	8.26
7/01	11:30	9234	62.0	8.32	0	0	0.0	0.00	7804	15.1	8.24
		109374	**74.88**	**7.74**	**13865**		**1.60**	**7.13**			
TOTAL/AVG		**993,427**	**76.54**	**7.66**	**182,886**		**1.39**	**7.38**			

11BOE1 History											
	Level (in)	Rain 15 Min Total		0.01	Rain 1 Hour Total			0.01	Rain 24 Hour Total		0.01
Date (mm/dd)	Time (HH:MM)	Flow In (gal)	Tur In (NTU)	pH In	Flow Out (gal)	Flow Out (gpm)	Tur Out (NTU)	pH Out	Flow Rec (gal)	Tur Rec (NTU)	pH Rec
7/16	20:45	3577	24.1	7.56	1548	230	1.0	7.55	130	1.4	7.54
7/16	20:30	7985	18.9	7.56	3464	231	0.9	7.54	0	0.0	0.00
7/16	20:15	8011	23.7	7.54	3468	231	1.3	7.53	0	0.0	0.00
7/16	20:00	8050	30.0	7.54	3471	231	1.8	7.53	0	0.0	0.00
7/16	19:45	8910	48.9	7.56	1303	203	2.0	7.55	0	19.8	7.52
7/16	19:30	7702	31.3	7.53	12	22	2.2	7.51	28	38.2	7.49
7/16	17:15	0	14.2	7.55	0	0	0.0	0.00	22	0.7	7.53
7/16	16:45	6462	15.8	7.55	2853	228	1.3	7.53	68	1.4	7.53
7/16	16:30	7785	16.6	7.53	3433	229	1.5	7.52	0	0.0	0.00
7/16	16:15	7796	19.8	7.53	3440	230	1.3	7.51	0	0.0	0.00
7/16	16:00	7842	23.2	7.52	3463	231	1.4	7.50	0	0.0	0.00
7/16	15:45	7729	26.5	7.53	2950	219	1.6	7.51	32	2.5	7.53
7/16	13:15	5830	20.4	7.59	2627	233	1.7	7.57	120	1.7	7.57
7/16	13:00	8211	20.7	7.59	2461	220	1.6	7.57	43	3.6	7.55
7/16	12:45	9162	33.9	7.53	0	0	0.0	0.00	0	5.9	7.51
7/16	12:30	7957	45.7	7.51	3086	233	3.2	7.48	131	8.1	7.49
7/16	12:15	7870	61.0	7.50	3508	234	2.9	7.47	0	0.0	0.00
7/16	12:00	7893	83.1	7.50	3498	233	2.9	7.47	0	0.0	0.00
7/16	11:45	1332	76.3	7.51	121	98	2.8	7.46	42	2.9	7.47
7/16	9:30	0	24.5	7.50	0	0	0.0	0.00	10	1.2	7.48
7/16	9:15	4957	28.4	7.51	2217	233	1.7	7.48	72	1.5	7.49
7/16	9:00	7846	45.4	7.50	3514	234	1.9	7.48	0	0.0	0.00
7/16	8:45	7852	20.0	7.50	3507	234	1.0	7.47	0	0.0	0.00
7/16	8:30	7886	19.5	7.49	3525	235	1.3	7.47	0	0.0	0.00
7/16	8:15	8076	22.0	7.50	3891	250	1.7	7.48	0	0.0	0.00
7/16	8:00	8205	26.8	7.51	4128	245	1.8	7.49	0	0.0	0.00
7/16	7:45	9154	36.7	7.51	705	227	2.7	7.49	0	4.6	7.48
7/16	7:30	9947	43.6	7.47	0	0	0.0	0.00	0	39.3	7.44
7/16	7:15	3068	18.5	7.45	0	15	2.4	7.39	41	3.8	7.40
7/16	5:00	3754	21.5	7.42	1893	250	1.7	7.40	137	1.6	7.41
7/16	4:45	8080	24.5	7.42	4080	242	2.0	7.41	0	0.0	0.00
7/16	4:30	8125	30.1	7.41	4063	241	1.6	7.39	0	0.0	0.00
7/16	4:15	8159	37.5	7.41	4087	242	1.9	7.39	0	0.0	0.00
7/16	4:00	5992	44.8	7.42	2703	245	2.1	7.38	0	1.2	7.35

7/16	1:45	806	26.0	7.39	414	245	1.6	7.37	139	1.5	7.37
7/16	1:30	8126	31.2	7.39	4138	246	1.7	7.37	0	0.0	0.00
7/16	1:15	8123	34.0	7.38	4138	246	1.4	7.35	0	0.0	0.00
7/16	1:00	8171	30.5	7.37	4144	246	1.4	7.34	0	0.0	0.00
7/16	:45	8211	39.0	7.38	4125	245	1.3	7.33	0	0.0	0.00
7/16	:30	1049	47.5	7.35	22	58	2.3	7.30	26	2.7	7.31
		265691	**32.15**	**7.49**	**100000**		**1.80**	**7.46**			
7/15	18:00	0	0.0	7.34	0	0	0.0	0.00	3	0.0	7.33
7/15	17:30	4118	45.5	7.36	2028	250	2.0	7.34	109	1.9	7.34
7/15	17:15	8542	55.0	7.34	2805	243	1.7	7.32	0	16.1	7.30
7/15	17:00	7165	66.5	7.31	0	5	2.6	7.24	25	34.4	7.26
7/15	15:00	0	45.4	7.25	0	0	0.0	0.00	7	1.0	7.25
7/15	14:30	5848	55.3	7.27	2915	245	2.5	7.25	107	2.6	7.25
7/15	14:15	7987	55.0	7.25	3969	245	2.3	7.23	0	0.0	0.00
7/15	14:00	8039	58.0	7.25	3987	246	2.8	7.23	0	0.0	0.00
7/15	13:45	8085	67.6	7.26	4003	247	2.3	7.24	0	0.0	0.00
7/15	13:30	8780	71.3	7.27	1189	249	2.1	7.25	56	4.2	7.23
7/15	13:15	8811	139.6	7.19	1133	240	2.5	7.14	225	5.0	7.16
7/15	13:00	5733	260.1	7.17	2484	248	1.7	7.11	0	1.3	7.06
7/15	11:15	0	247.9	7.12	0	0	0.0	0.00	10	1.0	7.08
7/15	11:00	0	247.8	7.11	0	246	2.0	7.07	119	1.8	7.07
7/15	10:45	8099	247.8	7.10	3989	246	2.2	7.06	0	0.0	0.00
7/15	10:30	8125	249.8	7.08	3996	246	1.8	7.04	0	0.0	0.00
7/15	10:15	8172	250.2	7.06	4009	247	2.2	7.02	0	0.0	0.00
7/15	10:00	8184	251.8	7.06	4005	247	1.9	7.02	0	0.0	0.00
7/15	9:45	9618	257.0	7.05	317	244	2.4	7.02	55	29.4	7.00
7/15	9:30	147	275.7	7.05	0	0	0.0	0.00	0	1.4	7.01
7/15	9:00	0	256.8	7.06	0	0	0.0	0.00	19	1.0	7.02
7/15	8:15	6433	254.7	7.05	3142	247	2.2	7.00	70	2.1	7.01
7/15	8:00	7888	255.9	7.03	3870	248	2.1	6.99	0	0.0	0.00
7/15	7:45	7929	259.5	7.02	3873	248	2.0	6.98	0	0.0	0.00
7/15	7:30	8069	263.7	7.03	3299	247	1.6	6.98	24	4.1	7.01
7/15	6:15	1186	259.7	7.06	587	250	2.1	7.02	82	1.9	7.02
7/15	6:00	7991	261.2	7.04	3916	241	2.1	7.00	0	0.0	0.00
7/15	5:45	8009	265.0	7.04	3930	242	1.9	7.00	0	0.0	0.00
7/15	5:30	8061	268.9	7.02	3939	243	1.6	6.99	0	0.0	0.00
7/15	5:15	4199	275.6	7.05	1758	241	1.3	7.01	0	1.4	7.04
7/15	4:00	5928	256.7	7.07	2897	243	1.5	7.02	119	1.3	7.04
7/15	3:45	8106	258.0	7.04	3962	244	1.6	7.01	0	0.0	0.00
7/15	3:30	8147	257.1	7.05	3964	244	1.4	7.01	0	0.0	0.00

7/15	3:15	8195	258.5	7.03	3980	245	1.5	7.00	0	0.0	0.00
7/15	3:00	8905	261.7	7.05	1950	238	1.4	7.03	0	19.1	7.01
7/15	2:45	4458	267.1	7.04	0	8	2.0	7.05	18	32.2	7.01
7/15	1:45	0	258.0	7.08	0	0	0.0	0.00	59	1.0	7.04
7/15	1:30	7407	259.5	7.06	3553	250	1.1	7.03	130	1.0	7.04
7/15	1:15	7814	264.8	7.03	3764	241	1.1	7.01	0	0.0	0.00
7/15	1:00	7876	266.9	7.03	3767	241	1.2	7.00	0	0.0	0.00
7/15	:45	7811	272.9	7.01	3020	224	1.1	6.97	16	3.2	6.97
		249865	**206.09**	**7.12**	**100000**		**1.88**	**7.08**			
7/14	16:15	0	248.2	7.03	0	0	0.0	0.00	57	1.4	6.98
7/14	16:00	8010	249.7	7.01	3911	241	1.5	6.97	0	0.0	0.00
7/14	15:45	5851	252.5	7.00	2407	244	1.3	6.97	48	2.8	6.98
7/14	14:45	0	240.3	7.05	0	0	0.0	0.00	4	1.0	6.99
7/14	14:30	5510	239.0	7.03	2707	244	1.5	6.98	92	1.4	7.00
7/14	14:15	8082	240.5	7.02	3973	245	1.4	6.98	0	0.0	0.00
7/14	14:00	8136	242.2	7.01	3977	245	1.3	6.97	0	0.0	0.00
7/14	13:45	8168	248.1	7.00	3969	245	1.1	6.97	0	0.0	0.00
7/14	13:30	7991	256.1	6.99	3627	246	0.9	6.97	0	1.0	7.01
7/14	12:45	0	218.8	7.05	0	0	0.0	0.00	4	0.7	7.01
7/14	12:15	4395	216.6	7.04	2126	246	1.0	7.00	109	1.0	7.01
7/14	12:00	8264	219.9	7.02	3989	246	1.2	6.98	0	0.0	0.00
7/14	11:45	8284	215.3	7.02	3988	246	1.0	6.99	0	0.0	0.00
7/14	11:30	8332	207.5	7.01	4003	247	1.2	6.97	0	0.0	0.00
7/14	11:15	8329	205.1	7.01	4001	247	1.0	6.99	0	0.0	0.00
7/14	11:00	8373	200.2	7.02	4013	241	1.0	7.00	0	0.0	0.00
7/14	10:45	9037	194.5	7.06	2258	241	1.2	7.03	0	10.3	7.04
7/14	10:30	9504	195.2	7.03	0	0	2.9	7.00	0	11.2	7.00
7/14	10:15	668	204.7	7.04	0	0	0.0	0.00	0	4.5	6.99
7/14	10:00	298	191.8	7.09	0	0	0.0	0.00	0	3.5	7.04
7/14	9:45	106	181.0	7.08	0	0	0.0	0.00	0	3.4	7.04
7/14	9:30	0	207.5	6.96	0	0	0.0	0.00	24	4.7	6.97
7/14	9:15	0	209.8	6.98	3760	243	3.3	6.96	119	3.5	6.97
7/14	9:00	0	220.1	6.96	3968	245	3.1	6.95	0	0.0	0.00
7/14	8:45	0	227.2	6.95	1044	235	2.9	6.97	0	0.0	0.00
7/14	6:45	0	164.9	7.03	1797	246	2.8	7.00	135	2.8	7.01
7/14	6:30	0	165.4	7.02	3993	246	2.7	7.01	0	0.0	0.00
7/14	6:15	0	156.1	7.03	3960	247	2.7	7.00	0	0.0	0.00
7/14	6:00	0	161.2	7.00	4012	247	2.8	6.99	0	0.0	0.00
7/14	5:45	0	157.9	7.03	2688	243	2.6	7.02	0	0.0	0.00
7/14	5:30	0	176.7	6.97	9	32	2.9	6.99	75	13.9	6.97

7/14	4:45	5989	159.5	7.01	2853	250	2.2	6.98	161	2.1	6.99
7/14	4:30	8199	171.8	6.98	3899	250	2.1	6.97	0	0.0	0.00
7/14	4:15	5958	188.8	6.96	2526	243	2.1	6.98	0	2.4	7.03
7/14	2:00	3812	143.1	7.06	1831	241	2.0	7.02	161	2.0	7.03
7/14	1:45	8214	149.2	7.04	3924	242	2.0	7.03	0	0.0	0.00
7/14	1:30	8279	139.6	7.06	3932	242	2.0	7.03	0	0.0	0.00
7/14	1:15	8302	152.4	7.03	3937	242	2.2	7.01	0	0.0	0.00
7/14	1:00	8548	150.7	7.06	2898	243	2.3	7.04	0	6.8	7.01
7/14	:45	6533	175.1	6.99	20	46	2.5	6.99	36	18.8	6.98
		181172	**198.61**	**7.02**	**100000**		**1.96**	**6.99**			
7/13	19:45	7349	126.7	7.01	3473	247	1.8	6.98	71	1.8	7.00
7/13	19:30	8245	143.9	6.98	3872	248	1.7	6.96	0	0.0	0.00
7/13	19:15	4745	170.5	6.96	1989	240	1.8	6.98	0	2.0	7.02
7/13	17:45	0	85.4	7.09	0	0	0.0	0.00	3	1.6	7.03
7/13	17:15	7428	87.5	7.05	3523	241	1.7	7.01	69	1.6	7.03
7/13	17:00	8284	96.1	7.02	3936	242	1.7	6.99	0	0.0	0.00
7/13	16:45	8326	91.3	7.02	1962	242	1.6	7.00	0	0.0	0.00
7/13	16:30	8364	90.5	7.01	1967	242	1.7	6.98	0	0.0	0.00
7/13	16:15	6838	97.7	7.00	2972	232	1.7	6.98	0	1.7	7.00
7/13	16:00	5086	93.0	7.02	2254	241	1.7	6.99	93	1.6	7.00
7/13	15:45	9593	102.4	6.99	401	200	2.5	6.99	0	18.9	6.97
7/13	15:30	1336	113.1	6.98	131	109	2.3	6.95	256	1.7	6.95
7/13	15:15	0	110.4	6.97	1046	241	1.4	6.97	95	1.3	6.97
7/13	15:00	0	89.8	7.01	245	143	2.2	6.98	176	1.0	6.99
7/13	14:45	0	81.4	7.02	0	0	0.0	0.00	81	1.6	7.01
7/13	13:00	0	83.6	7.05	2716	242	1.3	7.01	0	1.4	7.02
7/13	12:45	0	94.6	7.02	3551	244	1.2	7.00	0	0.0	0.00
7/13	12:30	0	106.4	7.02	3234	250	1.2	6.99	142	2.2	6.99
7/13	12:15	0	131.0	7.08	145	247	1.4	7.02	143	1.4	7.02
7/13	11:15	5233	79.8	7.05	2323	245	1.2	7.02	0	1.2	7.02
7/13	11:00	8070	89.3	7.03	3580	247	1.1	7.01	0	0.0	0.00
7/13	10:45	8131	90.1	7.03	3587	248	1.2	7.00	0	0.0	0.00
7/13	10:30	8216	112.2	7.00	3619	242	1.2	6.98	0	1.1	6.98
7/13	10:15	796	118.1	7.01	480	241	1.0	6.97	218	0.9	6.98
7/13	10:00	877	129.6	7.03	639	244	1.5	6.98	139	1.7	7.00
7/13	9:00	7866	81.7	7.01	3388	245	1.3	7.00	181	2.5	7.00
7/13	8:30	6753	66.3	7.04	2968	244	1.1	7.01	0	1.0	7.02
7/13	8:15	8528	72.1	7.02	3055	249	1.3	7.00	1407	6.5	7.02
7/13	8:00	9504	85.7	7.02	2471	249	0.8	6.97	4727	20.9	7.00
7/13	7:45	8112	99.2	6.98	3525	241	0.8	6.98	0	0.0	0.00

7/13	7:30	873	116.5	7.10	628	241	2.2	7.02	134	1.2	7.04
7/13	5:30	7839	58.4	7.07	3401	249	0.7	7.03	3	0.8	7.05
7/13	5:15	8155	69.9	7.03	3546	242	0.7	7.01	0	0.0	0.00
7/13	5:00	8199	78.2	7.04	3537	242	0.7	7.01	0	0.0	0.00
7/13	4:45	8270	94.0	7.01	3571	246	0.7	6.99	0	0.0	0.00
7/13	4:30	4590	108.8	7.02	1872	244	0.8	7.02	223	1.2	7.07
7/13	2:15	6050	56.4	7.10	2628	248	0.7	7.06	13	0.8	7.08
7/13	2:00	8270	62.3	7.10	3605	241	0.6	7.08	0	0.0	0.00
7/13	1:45	8311	61.9	7.10	3604	242	0.7	7.07	0	0.0	0.00
7/13	1:30	8359	78.9	7.07	3627	244	0.8	7.06	0	0.0	0.00
7/13	1:15	8804	80.3	7.11	2935	249	1.1	7.08	1565	6.3	7.06
7/13	1:00	5597	103.8	7.07	0	247	2.8	7.09	3992	19.0	7.04
		230997	**94.97**	**7.03**	**100000**		**1.35**	**7.01**			
7/12	17:15	7289	58.8	7.11	3212	238	1.0	7.08	0	1.0	7.09
7/12	17:00	8161	73.6	7.10	3559	238	0.9	7.07	0	0.0	0.00
7/12	16:45	8277	81.0	7.09	3580	239	0.9	7.07	0	0.0	0.00
7/12	16:30	4876	98.8	7.08	2003	243	1.0	7.05	211	0.9	7.08
7/12	15:15	6821	55.5	7.10	3193	242	0.8	7.07	113	0.7	7.08
7/12	15:00	7897	68.3	7.07	3341	243	1.2	7.06	704	9.9	7.07
7/12	14:45	9161	55.4	7.06	1350	235	1.2	7.01	4410	25.1	7.04
7/12	14:30	8117	63.7	7.02	3530	236	1.2	7.01	0	0.0	0.00
7/12	14:15	8178	52.6	7.02	3551	237	1.2	7.00	0	0.0	0.00
7/12	14:00	8230	67.8	7.01	3576	238	1.3	7.00	0	0.0	0.00
7/12	13:45	8314	70.8	7.02	3598	240	1.4	7.00	0	0.0	0.00
7/12	13:30	8556	90.3	7.02	3337	243	1.3	7.02	704	5.4	7.02
7/12	13:15	7808	116.8	7.02	68	249	2.5	7.04	5501	28.7	7.01
7/12	11:00	5724	69.9	7.06	2487	237	2.0	7.05	91	1.7	7.06
7/12	10:45	8194	83.2	7.05	3550	237	1.5	7.05	0	0.0	0.00
7/12	10:30	8262	72.2	7.06	3568	238	1.3	7.06	0	0.0	0.00
7/12	10:15	8277	71.3	7.06	3601	240	1.5	7.05	0	0.0	0.00
7/12	10:00	8403	96.6	7.04	3641	243	1.7	7.05	0	0.0	0.00
7/12	9:45	8958	94.9	7.08	1979	248	2.2	7.11	3649	19.3	6.62
7/12	9:30	9788	97.9	7.05	0	0	0.0	0.00	7062	48.4	7.06
7/12	9:15	8260	59.2	7.06	2515	229	1.2	7.05	1256	23.8	7.06
7/12	9:00	8048	67.0	7.07	3449	230	1.0	7.08	0	0.0	0.00
7/12	8:45	8070	55.9	7.11	3457	230	1.1	7.19	0	0.0	0.00
7/12	8:30	6868	40.8	7.19	2791	233	1.1	7.23	322	14.4	7.29
7/12	8:15	5818	181.0	7.21	0	0	0.0	0.00	5094	5.9	7.18
7/12	8:00	8971	185.1	7.16	0	0	0.0	0.00	7848	6.3	7.14
7/12	7:45	8985	188.6	7.13	0	0	0.0	0.00	7875	6.7	7.11

7/12	7:30	9007	189.9	7.11	0	0	0.0	0.00	7839	7.3	7.10
7/12	7:15	9031	199.1	7.06	0	0	0.0	0.00	7878	9.0	7.05
7/12	7:00	9037	217.9	7.04	0	0	0.0	0.00	7872	11.2	7.03
7/12	6:45	9304	236.5	7.00	0	0	0.0	0.00	7314	38.6	7.00
7/12	6:30	1481	218.8	7.02	126	241	4.2	7.01	1052	19.4	7.00
7/12	5:15	3010	189.9	7.03	1275	222	4.2	7.01	0	4.3	7.01
7/12	5:00	7899	193.3	7.01	3351	224	4.3	6.99	0	0.0	0.00
7/12	4:45	7920	199.4	7.00	3355	224	4.3	6.99	0	0.0	0.00
7/12	4:30	7996	204.3	7.00	3376	225	4.0	6.98	0	0.0	0.00
7/12	4:15	8058	211.7	6.98	3401	227	3.2	6.98	0	0.0	0.00
7/12	4:00	676	225.2	7.09	361	241	3.7	7.03	186	3.2	7.03
7/12	2:15	3066	175.3	7.07	1306	228	2.8	7.04	90	2.8	7.04
7/12	2:00	8054	178.8	7.05	3421	229	2.9	7.03	0	0.0	0.00
7/12	1:45	8084	188.2	7.03	3424	229	3.1	7.02	0	0.0	0.00
7/12	1:30	8133	187.3	7.04	3453	250	2.8	7.01	0	0.0	0.00
7/12	1:15	8171	199.2	7.02	3460	242	3.3	7.00	0	0.0	0.00
7/12	1:00	2188	210.9	7.03	764	249	2.9	7.00	332	6.9	7.01
		325426	**130.52**	**7.06**	**100000**		**2.12**	**7.04**			
7/11	21:45	6820	162.9	7.05	2900	244	3.4	7.05	0	4.1	7.03
7/11	21:30	8210	156.7	7.06	3509	247	3.1	7.05	0	0.0	0.00
7/11	21:15	8681	164.3	7.04	1952	243	4.0	7.04	3549	5.8	7.03
7/11	20:45	7536	195.4	7.02	118	244	2.1	7.03	5315	39.9	7.02
7/11	19:15	6793	147.3	7.06	2669	246	1.4	7.03	118	1.4	7.04
7/11	19:00	8203	156.7	7.02	3303	240	1.6	7.01	0	0.0	0.00
7/11	18:45	8218	164.5	7.03	3303	242	1.4	7.01	0	0.0	0.00
7/11	18:30	8309	179.2	7.00	3342	246	1.5	6.99	0	0.0	0.00
7/11	18:15	5307	190.8	6.99	2082	249	1.3	7.00	127	1.5	7.05
7/11	16:15	7966	141.9	7.07	3230	246	1.6	7.05	92	1.4	7.07
7/11	16:00	8321	155.5	7.03	3385	250	2.1	7.02	0	0.0	0.00
7/11	15:45	8365	167.1	7.03	3398	242	1.7	7.02	0	0.0	0.00
7/11	15:30	8446	187.0	7.01	3412	245	1.9	6.99	0	0.0	0.00
7/11	15:15	5074	206.7	6.99	1960	250	1.6	6.99	201	3.7	7.03
7/11	12:30	8136	127.5	7.04	3331	249	3.0	7.05	114	2.3	7.06
7/11	12:15	8385	108.5	7.07	3443	250	2.2	7.07	0	0.0	0.00
7/11	12:00	8479	119.1	7.04	3476	244	3.2	7.05	0	0.0	0.00
7/11	11:45	8861	136.8	7.05	2157	245	3.7	7.06	2927	30.7	7.06
7/11	11:30	8949	129.1	7.01	1428	250	1.7	7.00	3726	39.1	7.03
7/11	11:15	6232	134.5	7.00	2420	249	1.1	7.01	191	1.1	7.06
7/11	10:00	2590	95.3	7.08	1042	248	1.5	7.06	0	1.4	7.06
7/11	9:45	8239	103.6	7.05	3305	241	1.6	7.03	0	0.0	0.00

7/11	9:30	8303	120.1	7.02	3324	243	1.8	7.01	0	0.0	0.00
7/11	9:15	2244	141.3	7.00	844	250	1.5	7.00	125	1.7	7.01
7/11	8:30	1103	123.2	7.02	880	242	1.8	7.02	0	1.7	7.02
7/11	8:15	8002	142.9	7.01	3202	249	1.4	7.03	127	1.7	7.08
7/11	6:30	1783	85.5	7.11	727	250	1.5	7.10	0	1.5	7.10
7/11	6:15	8283	101.2	7.07	3416	245	1.8	7.09	0	0.0	0.00
7/11	6:00	8302	80.6	7.14	3426	246	1.3	7.13	0	0.0	0.00
7/11	5:45	8386	83.9	7.12	3458	250	1.5	7.11	0	0.0	0.00
7/11	5:30	8256	94.7	7.10	3403	243	2.0	7.13	0	4.8	7.16
7/11	5:15	8238	68.6	7.17	3372	241	4.5	7.17	0	0.0	0.00
7/11	5:00	8829	72.8	7.14	1608	249	4.6	7.16	4160	5.3	7.14
7/11	4:45	8602	74.6	7.16	2476	250	4.5	7.21	2187	5.6	7.15
7/11	4:30	8954	59.0	7.19	1351	248	4.6	7.21	4843	7.0	7.18
7/11	4:15	9262	61.4	7.19	0	0	0.0	0.00	7836	7.1	7.21
7/11	4:00	9291	63.2	7.17	0	0	0.0	0.00	7900	7.7	7.17
7/11	3:45	9324	88.8	7.09	0	0	0.0	0.00	7863	11.1	7.12
7/11	3:30	9436	83.5	7.14	0	245	4.9	7.11	7082	34.7	7.14
7/11	3:15	8934	73.9	7.07	0	0	0.0	0.00	7402	5.3	7.08
7/11	3:00	8883	88.5	7.07	560	241	4.8	7.03	6777	5.8	7.06
7/11	2:45	8290	116.3	7.03	3010	242	4.5	7.02	0	0.0	0.00
7/11	2:30	5173	133.6	7.03	2014	248	3.7	7.05	128	3.6	7.12
7/11	1:00	4660	72.9	7.14	1909	248	3.8	7.13	105	3.8	7.13
7/11	:45	8635	74.5	7.12	1865	244	4.0	7.12	3407	5.3	7.09
		337293	**120.79**	**7.07**	**100000**		**2.57**	**7.06**			
7/10	23:45	1927	158.9	7.11	698	243	3.3	7.11	131	3.5	7.13
7/10	22:15	6621	69.5	7.14	2661	245	3.7	7.14	4	3.6	7.15
7/10	22:00	8780	75.7	7.11	2232	248	3.9	7.13	2704	5.9	7.11
7/10	21:45	8646	89.5	7.12	2807	247	3.8	7.15	1414	6.1	7.12
7/10	21:30	9066	96.2	7.12	1351	250	4.3	7.14	4759	6.5	7.12
7/10	21:15	9470	119.7	7.05	161	231	1.4	7.06	6591	37.6	7.08
7/10	21:00	8276	102.5	7.06	3219	229	1.4	7.04	0	0.0	0.00
7/10	20:45	8350	122.8	7.02	3234	231	1.3	7.02	0	0.0	0.00
7/10	20:30	1978	135.5	7.06	717	240	1.4	7.04	123	1.3	7.06
7/10	19:00	2362	75.4	7.09	912	227	1.9	7.07	0	1.8	7.08
7/10	18:45	8411	86.6	7.06	3250	232	2.0	7.06	0	0.0	0.00
7/10	18:30	8437	93.2	7.06	3243	232	1.9	7.06	0	0.0	0.00
7/10	18:15	8539	110.3	7.04	3268	237	1.8	7.03	0	0.0	0.00
7/10	18:00	6421	129.6	7.02	2372	241	1.5	7.03	186	1.8	7.06
7/10	16:15	5149	80.3	7.08	985	240	2.5	7.07	95	2.4	7.09
7/10	16:00	8613	92.3	7.05	3310	241	2.6	7.07	0	0.0	0.00

7/10	15:45	8655	102.3	7.07	3316	242	2.4	7.05	0	0.0	0.00
7/10	15:30	8725	126.1	7.03	3331	243	2.1	7.03	0	0.0	0.00
7/10	15:15	2015	143.1	7.05	683	244	1.4	7.05	199	2.2	7.07
7/10	13:30	8323	95.1	7.07	3241	247	3.4	7.08	110	3.1	7.09
7/10	13:15	8617	107.0	7.08	3358	247	3.7	7.08	0	0.0	0.00
7/10	13:00	8682	127.5	7.06	3378	241	4.2	7.06	0	0.0	0.00
7/10	12:45	6803	159.1	7.03	2551	244	2.5	7.04	131	3.5	7.07
7/10	11:00	2746	67.1	7.09	1080	243	3.8	7.10	0	3.8	7.10
7/10	10:45	8678	76.1	7.07	3395	242	2.7	7.11	0	0.0	0.00
7/10	10:30	8928	86.5	7.12	2399	246	2.4	7.14	2301	29.5	7.11
7/10	10:15	9213	82.9	7.06	1164	241	1.5	7.07	4173	39.0	7.09
7/10	10:00	8326	78.7	7.07	3184	242	1.6	7.04	0	0.0	0.00
7/10	9:45	8392	95.9	7.03	3214	248	1.1	7.02	0	0.0	0.00
7/10	9:30	2085	105.6	7.05	714	238	1.2	7.04	188	1.2	7.08
7/10	8:00	1799	56.4	7.10	694	245	1.5	7.09	0	1.6	7.09
7/10	7:45	8346	64.3	7.07	3188	246	1.4	7.07	0	0.0	0.00
7/10	7:30	8362	72.8	7.07	3219	249	1.3	7.08	0	0.0	0.00
7/10	7:15	8427	86.0	7.06	3234	242	1.2	7.05	0	0.0	0.00
7/10	7:00	7351	101.9	7.05	2731	238	0.8	7.06	217	1.0	7.15
7/10	5:15	7507	51.4	7.15	2961	238	1.1	7.14	0	1.1	7.15
7/10	5:00	8524	64.1	7.11	3248	243	0.9	7.15	0	0.0	0.00
7/10	4:45	8625	45.1	7.20	3249	234	0.8	7.18	0	0.0	0.00
7/10	4:30	8676	59.7	7.27	3265	235	0.8	7.15	0	0.0	0.00
7/10	4:15	8713	145.2	7.18	3271	237	4.5	7.21	0	0.0	0.00
7/10	3:15	9557	115.9	7.42	0	0	0.0	0.00	7502	5.8	7.39
7/10	3:00	9580	117.2	7.35	0	0	0.0	0.00	7544	6.0	7.33
7/10	2:45	9586	120.1	7.27	0	0	0.0	0.00	7572	6.3	7.27
7/10	2:30	9613	122.6	7.22	0	0	0.0	0.00	7529	6.5	7.24
7/10	2:15	9655	123.1	7.21	0	0	0.0	0.00	7540	6.7	7.22
7/10	2:00	9708	129.8	7.15	0	0	0.0	0.00	7479	7.5	7.16
7/10	1:45	9702	142.0	7.13	0	0	0.0	0.00	7510	7.4	7.15
7/10	1:30	9928	158.6	7.09	0	0	0.0	0.00	7004	33.1	7.09
7/10	1:15	6075	159.0	7.05	1522	218	1.7	7.06	1267	8.1	7.05
		370968	**102.58**	**7.11**	**100000**		**2.16**	**7.08**			
		1,961,412	**125.82**	**7.12**	**7,000,000**		**1.98**	**7.10**			

influent flow meter was plugged with debris from dewatering activities. Flow meter was cleaned and eventually replaced.

11BOE1 History

Level (in)	Rain 15 Min Total 0.01	Rain 1 Hour Total 0.01	Rain 24 Hour Total 0.00

Date (mm/dd)	Time (HH:MM)	Flow In (gal)	Tur In (NTU)	pH In	Flow Out (gal)	Flow Out (gpm)	Tur Out (NTU)	pH Out	Flow Rec (gal)	Tur Rec (NTU)	pH Rec
7/22	23:00	1030	9.6	7.74	448	224	0.3	7.65	146	0.3	7.61
7/22	22:45	7745	10.5	7.68	3369	225	0.4	7.64	0	0.0	0.00
7/22	22:30	7769	13.1	7.66	3380	225	0.4	7.61	0	0.0	0.00
7/22	22:15	7817	17.7	7.64	3383	225	0.5	7.60	0	0.0	0.00
7/22	22:00	7802	19.7	7.67	3374	225	0.5	7.61	0	0.0	0.00
7/22	21:45	9176	24.8	7.68	877	171	1.0	7.60	0	22.5	7.57
7/22	21:30	2318	7.3	7.51	25	38	2.2	7.58	46	3.6	7.19
7/22	17:45	0	9.9	7.71	0	0	0.0	0.00	126	0.9	7.48
7/22	17:30	7555	11.1	7.66	3288	219	1.3	7.62	0	0.0	0.00
7/22	17:15	7587	12.3	7.65	3293	219	1.3	7.61	0	0.0	0.00
7/22	17:00	7620	11.7	7.64	3294	220	1.4	7.60	0	0.0	0.00
7/22	16:45	7666	14.2	7.62	3301	220	1.5	7.57	0	0.0	0.00
7/22	16:30	7785	18.8	7.66	3110	210	1.2	7.55	9	3.4	7.56
7/22	16:15	504	3.1	7.36	4	31	2.6	7.60	18	0.2	7.49
7/22	13:15	1778	11.1	7.70	773	221	1.3	7.62	146	1.0	7.79
7/22	13:00	7650	13.5	7.64	3324	221	1.4	7.61	0	0.0	0.00
7/22	12:45	7683	13.4	7.65	3309	221	1.4	7.61	0	0.0	0.00
7/22	12:30	7719	15.9	7.63	3322	222	1.5	7.59	0	0.0	0.00
7/22	12:15	7729	20.4	7.61	3330	222	1.3	7.56	0	0.0	0.00
7/22	12:00	3908	14.5	7.58	1339	192	0.9	7.56	0	0.4	7.92
7/22	9:15	0	12.9	7.65	0	0	0.0	0.00	16	0.5	7.81
7/22	9:00	0	13.8	7.72	0	0	0.0	0.00	52	3.7	7.87
7/22	8:45	6109	14.8	7.66	1808	205	1.6	7.59	228	7.8	7.19
7/22	8:30	7675	20.5	7.64	3347	223	1.3	7.59	0	0.0	0.00
7/22	8:15	7716	19.6	7.63	3351	224	1.4	7.57	0	0.0	0.00
7/22	8:00	7748	26.3	7.61	3359	224	1.3	7.54	0	0.0	0.00
7/22	7:45	7752	34.9	7.71	2953	211	0.9	7.57	0	5.2	7.85
7/22	5:00	0	10.1	7.71	0	0	0.0	0.00	12	0.5	7.81
7/22	4:45	6962	11.1	7.66	3026	224	0.5	7.60	132	0.5	7.72
7/22	4:30	7752	13.7	7.64	3374	225	0.7	7.58	0	0.0	0.00
7/22	4:15	7785	17.9	7.62	3380	225	0.9	7.56	0	0.0	0.00
7/22	4:00	7792	22.2	7.64	3378	225	0.9	7.58	0	0.0	0.00

7/22	3:45	8816	28.8	7.65	1427	194	1.2	7.57	0	23.0	7.56
7/22	3:30	4816	22.3	7.81	0	0	0.0	0.00	0	26.3	7.63
7/22	:15	4994	11.8	7.68	2128	218	1.5	7.61	134	1.4	7.75
7/22	:	7729	14.1	7.66	3274	218	1.6	7.61	0	0.0	0.00
		212487	**16.27**	**7.64**	**81348**		**1.13**	**7.36**			
7/21	23:45	7760	13.2	7.67	3280	219	1.7	7.60	0	0.0	0.00
7/21	23:30	7790	16.0	7.66	3281	219	1.8	7.58	0	0.0	0.00
7/21	23:15	7852	19.5	7.72	3290	219	1.6	7.56	0	0.0	0.00
7/21	23:00	3030	21.6	7.83	656	163	1.4	7.60	0	7.3	7.75
7/21	20:00	3094	20.9	7.71	1324	221	1.5	7.61	198	3.6	7.80
7/21	19:45	7751	20.1	7.65	3318	221	1.8	7.59	0	0.0	0.00
7/21	19:30	7800	24.7	7.64	3318	221	1.8	7.59	0	0.0	0.00
7/21	19:15	7832	29.4	7.65	3308	221	1.9	7.58	0	0.0	0.00
7/21	19:00	7845	37.0	7.62	3301	220	2.0	7.56	0	0.0	0.00
7/21	18:45	8331	44.9	7.65	1941	193	1.9	7.54	9	4.1	7.52
7/21	18:30	1682	118.5	7.49	0	0	0.0	0.00	0	5.9	7.55
7/21	16:00	3331	93.1	7.56	0	0	0.0	0.00	0	19.9	7.46
7/21	13:45	0	12.4	7.55	0	0	0.0	0.00	21	0.4	7.50
7/21	13:15	1420	15.7	7.59	614	223	0.7	7.56	118	0.6	7.54
7/21	13:00	7781	21.0	7.59	3358	224	0.7	7.56	0	0.0	0.00
7/21	12:45	7794	14.7	7.59	3360	224	0.6	7.55	0	0.0	0.00
7/21	12:30	7842	19.2	7.57	3375	225	0.8	7.53	0	0.0	0.00
7/21	12:15	7854	26.8	7.56	3374	225	1.0	7.53	0	0.0	0.00
7/21	12:00	8733	30.9	7.56	1528	205	1.1	7.54	0	24.8	7.52
7/21	11:45	8608	16.7	7.54	1841	217	1.9	7.50	149	36.1	7.50
7/21	11:30	7714	21.7	7.54	3258	217	1.6	7.50	0	0.0	0.00
7/21	11:15	5368	24.5	7.55	885	175	1.8	7.49	22	3.8	7.49
7/21	9:30	3179	14.2	7.57	1370	219	1.9	7.53	150	1.7	7.53
7/21	9:15	7636	16.7	7.56	3294	220	2.0	7.52	0	0.0	0.00
7/21	9:00	7657	20.1	7.56	3301	220	1.9	7.52	0	0.0	0.00
7/21	8:45	7695	20.7	7.56	3304	220	1.8	7.51	0	0.0	0.00
7/21	8:30	5637	24.1	7.60	1860	197	1.5	7.52	41	3.0	7.52
7/21	7:15	1669	14.6	7.61	718	221	1.7	7.56	151	1.6	7.55
7/21	7:00	7707	17.3	7.59	3315	221	1.8	7.54	0	0.0	0.00
7/21	6:45	7700	22.1	7.57	3321	221	1.8	7.53	0	0.0	0.00

7/21	6:30	7798	28.9	7.58	3118	207	1.3	7.52	0	1.0	7.50
7/21	6:15	242	17.4	7.56	0	0	0.0	0.00	0	0.6	7.49
7/21	4:30	4226	17.7	7.58	1836	223	1.4	7.54	186	1.2	7.53
7/21	4:15	7721	22.3	7.56	3342	223	1.5	7.52	0	0.0	0.00
7/21	4:00	7769	29.4	7.55	3338	223	1.3	7.51	0	0.0	0.00
7/21	3:45	6296	37.4	7.57	2368	204	0.8	7.50	0	0.4	7.48
7/21	1:15	0	10.3	7.55	0	0	0.0	0.00	11	0.3	7.49
7/21	1:00	904	11.1	7.56	393	225	0.5	7.53	148	0.4	7.51
7/21	:45	7788	13.2	7.55	3355	224	0.6	7.52	0	0.0	0.00
7/21	:30	7818	16.9	7.54	3367	224	0.7	7.50	0	0.0	0.00
7/21	:15	7851	22.8	7.53	3363	224	0.8	7.49	0	0.0	0.00
7/21	:	7840	25.3	7.53	3344	223	0.7	7.50	0	0.0	0.00
		252345	**26.06**	**7.59**	**96917**		**1.39**	**7.54**			
7/20	23:45	9144	31.9	7.52	929	185	1.3	7.49	0	25.4	7.47
7/20	23:30	2592	10.3	7.48	4	14	1.9	7.44	36	5.3	7.41
7/20	20:30	1900	12.0	7.52	813	217	1.5	7.48	110	1.2	7.46
7/20	20:15	7611	15.3	7.51	3259	217	1.7	7.47	0	0.0	0.00
7/20	20:00	7670	16.9	7.50	3255	217	1.6	7.47	0	0.0	0.00
7/20	19:45	7574	16.8	7.48	3282	219	1.7	7.45	0	0.0	0.00
7/20	19:30	7593	21.0	7.47	3292	220	1.6	7.43	0	0.0	0.00
7/20	19:15	6962	25.4	7.46	2593	202	1.2	7.42	8	0.8	7.36
7/20	16:00	2618	15.8	7.48	1168	222	1.5	7.45	152	1.2	7.44
7/20	15:45	7503	20.8	7.47	3338	223	1.6	7.44	0	0.0	0.00
7/20	15:30	7548	20.0	7.46	3333	222	1.6	7.43	0	0.0	0.00
7/20	15:15	7578	24.7	7.44	3345	223	1.8	7.41	0	0.0	0.00
7/20	15:00	7904	30.6	7.42	2442	206	1.6	7.39	237	4.0	6.99
7/20	14:45	3387	21.5	7.40	1154	189	1.1	7.39	0	0.2	7.34
7/20	12:00	0	18.0	7.44	0	0	0.0	0.00	12	1.0	7.42
7/20	11:45	6799	22.0	7.44	3016	223	1.6	7.42	140	1.3	7.43
7/20	11:30	7571	30.4	7.40	3361	224	2.0	7.39	0	0.0	0.00
7/20	11:15	7587	36.3	7.41	3365	224	1.9	7.40	0	0.0	0.00
7/20	11:00	7610	35.8	7.40	3365	225	2.3	7.38	0	0.0	0.00
7/20	10:45	7641	50.3	7.39	3378	225	2.2	7.38	0	0.0	0.00
7/20	10:30	8052	52.4	7.42	2203	205	1.6	7.40	0	18.9	7.38
7/20	10:15	6628	64.9	7.44	3	20	1.8	7.45	50	32.8	7.41

7/20	8:30	0	15.0	7.51	0	0	0.0	0.00	3	1.0	7.46
7/20	8:15	0	14.8	7.50	0	0	0.0	0.00	10	1.1	7.46
7/20	8:00	622	15.1	7.51	272	218	2.0	7.48	93	1.9	7.48
7/20	7:45	7461	17.2	7.49	3275	218	2.1	7.47	0	0.0	0.00
7/20	7:30	7490	18.9	7.49	3274	218	2.2	7.47	0	0.0	0.00
7/20	7:15	7546	19.7	7.47	3269	218	2.1	7.45	0	0.0	0.00
7/20	7:00	7570	25.0	7.45	3276	218	1.9	7.43	0	0.0	0.00
7/20	6:45	6842	30.2	7.48	2423	200	1.5	7.43	15	2.8	7.44
7/20	3:30	1502	14.6	7.50	662	221	1.6	7.47	101	1.5	7.47
7/20	3:15	7531	17.7	7.48	3318	221	1.6	7.46	0	0.0	0.00
7/20	3:00	7549	18.0	7.49	3318	221	1.7	7.46	0	0.0	0.00
7/20	2:45	7585	20.0	7.46	3320	222	1.6	7.44	0	0.0	0.00
7/20	2:30	7615	25.7	7.44	3330	222	1.3	7.42	0	0.0	0.00
7/20	2:15	5586	31.4	7.48	2074	200	1.1	7.43	0	1.1	7.44
		214371	**25.11**	**7.46**	**82709**		**1.69**	**7.44**			
7/19	23:00	2656	15.5	7.49	1174	223	1.2	7.47	140	1.1	7.47
7/19	22:45	7622	20.6	7.48	3350	223	1.2	7.46	0	0.0	0.00
7/19	22:30	7638	17.6	7.48	3352	223	1.2	7.46	0	0.0	0.00
7/19	22:15	7662	21.7	7.45	3365	224	1.2	7.43	0	0.0	0.00
7/19	22:00	7693	28.3	7.43	3361	224	0.9	7.41	0	0.0	0.00
7/19	21:45	4066	33.4	7.48	1464	196	0.7	7.43	0	0.4	7.44
7/19	19:00	4217	12.5	7.49	1849	224	0.6	7.47	160	0.5	7.47
7/19	18:45	7671	15.6	7.46	3371	225	0.7	7.45	0	0.0	0.00
7/19	18:30	7700	19.9	7.43	3377	225	0.9	7.42	0	0.0	0.00
7/19	18:15	7741	25.9	7.43	3383	225	0.9	7.42	0	0.0	0.00
7/19	18:00	7961	32.6	7.44	2709	209	1.1	7.43	0	9.2	7.41
7/19	17:45	8137	35.5	7.43	0	8	2.1	7.45	16	31.8	7.41
7/19	15:15	1376	11.9	7.49	600	218	1.6	7.47	133	1.4	7.47
7/19	15:00	7545	13.2	7.47	3279	219	1.8	7.46	0	0.0	0.00
7/19	14:45	7564	14.6	7.46	3302	219	1.7	7.45	0	0.0	0.00
7/19	14:30	7594	14.2	7.44	3285	219	1.6	7.42	0	0.0	0.00
7/19	14:15	7629	17.3	7.41	3285	219	1.5	7.40	0	0.0	0.00
7/19	14:00	6788	21.0	7.44	2242	185	1.2	7.41	0	4.6	7.43
7/19	5:45	757	15.4	7.48	334	222	1.5	7.46	163	1.5	7.46
7/19	5:30	7589	16.0	7.46	3328	222	1.6	7.44	0	0.0	0.00

7/19	5:15	7617	18.8	7.44	3325	222	1.7	7.44	0	0.0	0.00
7/19	5:00	7667	19.3	7.45	3329	222	1.8	7.44	0	0.0	0.00
7/19	4:45	7717	23.4	7.43	3340	222	1.6	7.42	0	0.0	0.00
7/19	4:30	6788	31.8	7.45	2507	202	1.3	7.43	29	2.4	7.47
7/19	1:45	1662	19.8	7.52	728	223	1.3	7.50	185	1.1	7.50
7/19	1:30	7670	23.9	7.50	3361	224	1.3	7.49	0	0.0	0.00
7/19	1:15	7686	24.4	7.52	3353	223	1.2	7.49	0	0.0	0.00
7/19	1:00	7739	26.8	7.49	3357	224	1.3	7.47	0	0.0	0.00
7/19	:45	7792	32.7	7.47	3156	209	1.0	7.44	0	0.0	0.00
7/19	:30	1288	19.5	7.43	45	28	1.9	7.40	6	0.9	7.36
		191232	**21.44**	**7.46**	**76911**		**1.29**	**7.44**			
7/18	16:45	5318	48.0	7.45	2299	224	1.5	7.44	133	1.9	7.44
7/18	16:30	2105	25.4	7.49	690	182	1.3	7.48	0	0.3	7.47
7/18	15:30	0	17.6	7.53	0	0	0.0	0.00	10	0.3	7.51
7/18	15:00	2061	38.0	7.53	898	225	1.0	7.52	113	0.8	7.52
7/18	14:45	9055	52.8	7.49	853	205	1.5	7.51	0	32.9	7.47
7/18	14:30	7924	32.2	7.48	2625	219	3.1	7.48	92	31.7	7.45
7/18	14:15	7605	26.5	7.47	3299	220	3.3	7.46	0	0.0	0.00
7/18	14:00	7638	34.3	7.45	3305	220	3.3	7.44	0	0.0	0.00
7/18	13:45	7651	35.0	7.48	3316	221	2.2	7.48	0	0.0	0.00
7/18	13:30	8050	23.8	7.49	2153	207	1.8	7.49	42	3.7	7.46
7/18	13:15	8734	37.2	7.43	111	221	3.4	7.41	145	5.7	7.43
7/18	13:00	7710	43.3	7.46	3321	222	2.2	7.46	0	0.0	0.00
7/18	12:45	8314	29.1	7.47	1512	197	1.8	7.47	33	3.9	7.45
7/18	12:30	8831	46.9	7.41	0	0	0.0	0.00	0	5.9	7.40
7/18	12:15	8093	61.1	7.42	2259	221	2.8	7.44	173	8.5	7.40
7/18	12:00	7794	55.9	7.45	3322	221	2.3	7.45	0	0.0	0.00
7/18	11:45	8914	45.2	7.48	834	184	1.6	7.47	0	4.8	7.46
7/18	11:30	9510	48.3	7.46	0	0	0.0	0.00	0	5.6	7.45
7/18	11:15	9535	72.7	7.41	0	0	0.0	0.00	0	9.1	7.40
7/18	11:00	9661	95.8	7.41	0	0	0.0	0.00	0	22.9	7.40
7/18	10:45	6859	87.5	7.43	4	10	2.4	7.49	22	31.0	7.41
7/18	9:15	5068	16.2	7.50	2195	231	1.9	7.48	106	1.8	7.49
7/18	9:00	8020	16.8	7.47	3474	231	2.0	7.46	0	0.0	0.00
7/18	8:45	8065	21.2	7.48	3476	232	2.4	7.47	0	0.0	0.00

7/18	8:30	8104	21.2	7.47	3491	233	2.3	7.46	0	0.0	0.00
7/18	8:15	8147	24.4	7.48	3489	233	2.4	7.47	0	0.0	0.00
7/18	8:00	8317	24.3	7.48	3054	214	2.1	7.47	64	3.4	7.45
7/18	7:45	8749	33.4	7.45	22	15	3.2	7.44	48	3.8	7.43
7/18	6:45	4318	41.6	7.45	1813	234	2.1	7.43	190	2.2	7.43
7/18	6:30	4188	46.0	7.51	1493	206	2.0	7.48	0	1.0	7.52
7/18	4:15	0	12.5	7.56	0	0	0.0	0.00	17	0.9	7.51
7/18	4:00	2304	14.1	7.56	997	235	1.1	7.54	151	1.1	7.54
7/18	3:45	8136	15.0	7.54	3526	235	1.3	7.52	0	0.0	0.00
7/18	3:30	8168	18.2	7.54	3532	236	1.4	7.52	0	0.0	0.00
7/18	3:15	8204	21.8	7.54	3533	235	1.3	7.52	0	0.0	0.00
7/18	3:00	7198	28.8	7.53	2315	213	1.6	7.51	112	3.2	7.49
7/18	2:45	8347	38.9	7.52	615	162	2.5	7.49	139	8.8	7.51
7/18	2:30	8443	33.7	7.52	0	7	2.5	7.48	12	38.2	7.48
7/18	2:15	0	7.1	7.52	0	0	0.0	0.00	8	0.9	5.96
		265138	**37.63**	**7.48**	**67826**		**2.09**	**7.48**			

7/17	18:30	7488	12.7	7.53	3199	229	1.6	7.50	74	1.5	7.52
7/17	18:15	8058	13.6	7.50	3438	229	1.7	7.49	0	0.0	0.00
7/17	18:00	8052	15.4	7.51	3438	229	1.6	7.50	0	0.0	0.00
7/17	17:45	8096	18.1	7.49	3458	230	1.6	7.47	0	0.0	0.00
7/17	17:30	8455	20.7	7.50	2578	219	1.9	7.46	23	3.7	7.50
7/17	17:15	525	18.9	7.55	5	20	2.3	7.53	24	1.8	7.52
7/17	14:45	2698	19.7	7.56	1155	231	2.2	7.54	139	2.2	7.54
7/17	14:30	8084	23.4	7.54	3481	232	2.2	7.52	0	0.0	0.00
7/17	14:15	8073	26.8	7.55	3486	232	2.4	7.53	0	0.0	0.00
7/17	14:00	8106	31.2	7.53	3493	233	2.1	7.51	0	0.0	0.00
7/17	13:45	8458	39.8	7.51	2459	220	1.9	7.49	0	3.6	7.48
7/17	13:30	2269	48.1	7.54	6	19	2.6	7.50	22	3.5	7.49
7/17	12:15	0	23.3	7.54	0	0	0.0	0.00	10	1.6	7.52
7/17	12:00	2618	26.1	7.54	1175	235	2.3	7.52	73	2.2	7.52
7/17	11:45	7861	32.6	7.52	3530	235	2.4	7.50	0	0.0	0.00
7/17	11:30	7901	47.0	7.50	3542	236	2.3	7.48	0	0.0	0.00
7/17	11:15	3260	57.9	7.54	1223	212	2.0	7.50	0	0.8	7.52
7/17	9:45	1049	16.3	7.56	469	235	1.1	7.54	113	1.0	7.54
7/17	9:30	7874	18.6	7.55	3547	236	1.2	7.53	0	0.0	0.00

7/17	9:15	7889	24.6	7.53	3552	237	1.7	7.51	0	0.0	0.00
7/17	9:00	8105	32.9	7.54	3068	226	2.3	7.52	0	3.6	7.53
7/17	8:45	9747	49.9	7.52	0	0	0.0	0.00	0	32.4	7.50
7/17	8:30	4398	14.0	7.53	17	23	2.0	7.51	45	15.8	7.48
7/17	6:30	6837	14.6	7.52	3079	233	1.2	7.50	106	1.1	7.51
7/17	6:15	7766	16.5	7.51	3503	234	1.4	7.50	0	0.0	0.00
7/17	6:00	7780	19.6	7.52	3510	234	1.3	7.50	0	0.0	0.00
7/17	5:45	7820	24.5	7.50	3523	235	1.5	7.48	0	0.0	0.00
7/17	5:30	7773	29.9	7.52	2957	220	1.8	7.49	32	3.0	7.52
7/17	2:45	774	21.7	7.57	354	237	1.5	7.55	146	1.5	7.55
7/17	2:30	7767	27.9	7.56	3555	237	1.6	7.54	0	0.0	0.00
7/17	2:15	7809	27.3	7.56	3550	237	1.3	7.54	0	0.0	0.00
7/17	2:00	7855	27.6	7.55	3559	237	1.3	7.53	0	0.0	0.00
7/17	1:45	7908	38.0	7.53	3554	237	1.1	7.51	0	0.0	0.00
7/17	1:30	2416	45.7	7.55	725	180	1.5	7.50	0	1.4	7.50
		211569	**27.32**	**7.53**	**82188**		**1.78**	**7.51**			

1,347,142	**25.94**	**7.53**	**487,899**	**1.54**	**7.50**

11BOE1 History

Level (in)		Rain 15 Min Total 0.01			Rain 1 Hour Total 0.01				Rain 24 Hour Total 0.01		
Date (mm/dd)	**Time (HH:MM)**	**Flow In (gal)**	**Tur In (NTU)**	**pH In**	**Flow Out (gal)**	**Flow Out (gpm)**	**Tur Out (NTU)**	**pH Out**	**Flow Rec (gal)**	**Tur Rec (NTU)**	**pH Rec**
7/30	17:15	2516	12.3	7.10	1034	207	0.9	7.10	56	0.8	7.09
7/30	17:00	7580	13.5	7.09	3109	207	0.9	7.10	0	0.0	0.00
7/30	16:45	7598	15.0	7.09	3114	208	0.9	7.09	0	0.0	0.00
7/30	16:30	7637	17.5	7.07	3131	209	0.7	7.09	0	0.0	0.00
7/30	16:15	3410	13.8	7.09	968	183	0.9	7.10	31	0.8	7.09
7/30	14:15	4572	11.6	7.14	1982	214	0.9	7.14	73	0.8	7.14
7/30	14:00	7419	12.9	7.12	3226	215	0.9	7.13	0	0.0	0.00
7/30	13:45	7441	13.3	7.12	3231	215	1.0	7.13	0	0.0	0.00
7/30	13:30	7480	15.6	7.10	3250	217	1.1	7.10	0	0.0	0.00
7/30	13:15	7501	18.4	7.10	3251	216	1.1	7.10	0	0.0	0.00
7/30	13:00	7551	22.6	7.09	3276	218	0.9	7.08	0	0.0	0.00
7/30	12:45	4250	16.6	7.14	1459	199	0.9	7.09	44	0.5	7.09
7/30	10:45	3133	1056.9	7.15	1373	220	1.2	7.15	89	1.1	7.15
7/30	10:30	7541	1056.9	7.13	3311	220	1.1	7.13	0	0.0	0.00
7/30	10:15	7556	1056.9	7.13	3311	221	1.1	7.13	0	0.0	0.00
7/30	10:00	7603	1056.9	7.11	3321	221	1.3	7.10	0	0.0	0.00
7/30	9:45	7606	1056.9	7.11	3324	221	1.1	7.10	0	0.0	0.00
7/30	9:30	7652	1027.2	7.09	3340	223	1.0	7.08	0	0.0	0.00
7/30	9:15	4803	419.4	7.09	1910	213	0.8	7.07	0	0.9	7.08
7/30	8:15	1008	22.5	7.09	118	151	2.4	7.09	86	2.6	7.09
7/30	8:00	8855	19.2	7.11	677	182	0.8	7.09	158	31.1	7.11
7/30	7:45	7112	12.3	7.08	3073	205	0.8	7.08	0	0.0	0.00
7/30	7:30	7153	13.2	7.07	3081	205	0.7	7.08	0	0.0	0.00
7/30	7:15	7216	15.0	7.07	3088	206	0.6	7.06	0	0.0	0.00
7/30	7:00	7339	17.2	7.09	2846	200	0.7	7.08	52	4.7	7.12
7/30	6:45	275	16.1	7.18	3	4	0.7	7.15	0	0.5	7.14
7/30	5:00	2283	10.4	7.16	986	208	0.7	7.15	89	0.7	7.15
7/30	4:45	7235	11.2	7.13	3125	208	0.7	7.13	0	0.0	0.00
7/30	4:30	7254	12.0	7.13	3138	209	0.7	7.13	0	0.0	0.00
7/30	4:15	7310	12.5	7.12	3140	210	0.7	7.11	0	0.0	0.00
7/30	4:00	7328	13.6	7.09	3130	211	0.7	7.10	0	0.0	0.00
7/30	3:45	7356	14.9	7.10	3164	211	0.6	7.10	0	0.0	0.00
7/30	3:30	7407	17.4	7.09	3185	213	0.5	7.09	0	0.0	0.00

7/30	3:15	2586	18.5	7.19	731	175	0.9	7.16	18	2.3	7.18
7/30	1:15	6152	10.5	7.19	2661	213	0.6	7.18	122	0.6	7.20
7/30	1:00	7417	12.2	7.17	3230	214	0.6	7.18	0	0.0	0.00
7/30	:45	7438	12.4	7.19	3215	215	0.6	7.18	0	0.0	0.00
7/30	:30	7483	14.6	7.15	3234	216	0.6	7.15	0	0.0	0.00
7/30	:	7553	20.2	7.17	3254	217	0.5	7.16	0	0.0	0.00
		244609	**184.87**	**7.12**	**100000**		**0.87**	**7.11**			

7/29	23:45	4566	17.1	7.31	1704	199	0.6	7.26	0	0.3	7.32
7/29	22:00	1002	10.4	7.38	437	218	0.5	7.38	117	0.5	7.37
7/29	21:45	7532	12.6	7.35	3291	220	0.6	7.35	0	0.0	0.00
7/29	21:30	7554	17.2	7.31	3307	220	0.6	7.33	0	0.0	0.00
7/29	21:15	7588	18.2	7.37	3306	220	0.6	7.37	0	0.0	0.00
7/29	21:00	7611	24.2	7.36	3296	220	0.5	7.36	0	0.0	0.00
7/29	20:45	1478	10.9	7.51	348	139	0.8	7.50	0	0.4	7.47
7/29	19:45	0	9.3	7.54	0	0	0.0	0.00	4	0.4	7.52
7/29	19:30	6470	11.2	7.53	2831	222	0.5	7.52	162	0.5	7.54
7/29	19:15	7640	16.5	7.49	3325	222	0.6	7.49	0	0.0	0.00
7/29	19:00	7629	15.2	7.52	3312	221	0.5	7.52	0	0.0	0.00
7/29	18:45	7662	15.5	7.51	3298	220	0.5	7.49	0	0.0	0.00
7/29	18:30	3046	11.8	7.53	834	150	0.7	7.50	0	0.4	7.46
7/29	12:30	5868	10.6	7.59	2531	220	0.5	7.57	213	0.5	7.58
7/29	12:15	6212	12.5	7.60	2313	200	0.6	7.55	0	0.4	7.53
7/29	10:00	0	8.1	7.61	0	0	0.0	0.00	12	0.5	7.59
7/29	9:45	6657	9.3	7.61	2874	221	0.5	7.60	156	0.5	7.60
7/29	9:30	7707	11.5	7.58	3319	221	0.7	7.57	0	0.0	0.00
7/29	9:15	7746	14.7	7.56	3317	221	0.9	7.54	0	0.0	0.00
7/29	9:00	3146	17.9	7.56	964	172	1.3	7.52	0	1.3	7.51
7/29	7:30	6807	20.0	7.58	390	145	2.2	7.54	226	17.2	7.55
7/29	7:15	4435	11.9	7.61	5	20	1.2	7.55	17	27.5	7.55
7/29	4:00	616	6.9	7.61	263	210	0.6	7.59	145	0.6	7.58
7/29	3:45	7432	7.2	7.60	3165	211	0.6	7.58	0	0.0	0.00
7/29	3:30	7446	7.6	7.57	3178	212	0.6	7.55	0	0.0	0.00
7/29	3:15	7493	8.3	7.55	3188	213	0.7	7.53	0	0.0	0.00
7/29	3:00	6436	9.1	7.57	2305	186	0.9	7.53	0	0.3	7.52
		147779	**12.80**	**7.52**	**57101**		**0.73**	**7.49**			

7/28	21:45	3238	7.3	7.61	1388	214	0.8	7.59	137	0.7	7.59
7/28	21:30	7510	7.6	7.60	3207	214	0.7	7.57	0	0.0	0.00
7/28	21:15	7520	8.4	7.57	3212	214	0.6	7.55	0	0.0	0.00
7/28	21:00	7579	9.6	7.55	3224	215	0.6	7.53	0	0.0	0.00
7/28	20:45	4632	8.1	7.55	1518	176	0.8	7.51	0	0.2	7.50
7/28	15:45	0	7.5	7.59	0	0	0.0	0.00	108	0.7	7.58
7/28	15:30	7301	8.4	7.59	3123	215	0.8	7.58	86	0.8	7.59
7/28	15:15	7595	9.4	7.56	3239	216	0.7	7.55	0	0.0	0.00
7/28	15:00	7639	10.4	7.54	3249	217	0.7	7.52	0	0.0	0.00
7/28	14:45	5181	11.0	7.52	1809	182	0.9	7.49	0	0.6	7.45
7/28	11:45	2122	7.6	7.59	568	156	1.3	7.51	213	0.4	7.51
7/28	9:15	0	8.3	7.59	0	0	0.0	0.00	12	0.9	7.57
7/28	9:00	6615	9.1	7.58	2777	213	0.9	7.56	135	0.9	7.57
7/28	8:45	7659	10.2	7.55	3215	214	0.8	7.53	0	0.0	0.00
7/28	8:30	7707	12.3	7.53	3220	215	1.0	7.50	0	0.0	0.00
7/28	8:15	7830	15.1	7.55	2848	196	1.2	7.50	18	2.4	7.57
7/28	8:00	140	8.6	7.64	0	0	0.0	0.00	0	0.7	7.60
7/28	3:15	3067	8.6	7.63	1298	216	1.2	7.60	169	1.2	7.60
7/28	3:00	7691	9.1	7.61	3252	217	1.3	7.59	0	0.0	0.00
7/28	2:45	7713	10.2	7.59	3258	217	1.2	7.56	0	0.0	0.00
7/28	2:30	7821	11.8	7.58	3238	216	0.9	7.53	0	0.0	0.00
7/28	2:15	2589	13.4	7.60	601	157	1.4	7.53	21	2.5	7.53
		119149	**9.64**	**7.58**	**48244**		**0.94**	**7.54**			

7/27	22:45	4961	11.9	7.60	2072	218	1.6	7.57	110	1.5	7.57
7/27	22:30	7846	14.5	7.59	3274	218	1.4	7.55	0	0.0	0.00
7/27	22:15	3621	9.7	7.56	1208	187	1.0	7.53	26	0.2	7.49
7/27	16:45	3903	9.9	7.60	1650	220	1.1	7.58	89	1.0	7.58
7/27	16:30	7827	12.0	7.59	3301	220	1.1	7.57	0	0.0	0.00
7/27	16:15	7846	10.3	7.58	3300	220	1.0	7.56	0	0.0	0.00
7/27	16:00	7865	12.2	7.56	3310	221	1.2	7.54	0	0.0	0.00
7/27	15:45	7899	15.3	7.55	3318	221	1.4	7.52	0	0.0	0.00
7/27	15:30	7911	20.3	7.56	3326	222	1.3	7.53	0	0.0	0.00
7/27	15:15	9368	23.2	7.57	614	187	1.6	7.53	0	31.2	7.50
7/27	15:00	1654	4.9	7.54	10	14	2.6	7.52	18	3.0	7.51
7/27	13:15	130	8.1	7.57	53	212	1.4	7.55	55	1.3	7.55
7/27	13:00	7701	8.9	7.57	3186	212	1.5	7.54	0	0.0	0.00
7/27	12:45	7706	10.0	7.56	3200	213	1.5	7.54	0	0.0	0.00

7/27	12:30	7739	10.0	7.56	3211	214	1.6	7.53	0	0.0	0.00
7/27	12:15	7780	11.7	7.54	3225	215	1.7	7.51	0	0.0	0.00
7/27	12:00	7801	12.9	7.55	3225	215	1.7	7.51	0	0.0	0.00
7/27	11:45	7839	16.6	7.54	3253	217	1.6	7.49	0	0.0	0.00
7/27	11:30	3573	15.2	7.58	330	160	2.5	7.48	0	16.0	7.49
7/27	10:00	1035	9.0	7.57	30	42	2.1	7.53	40	18.3	7.53
7/27	9:30	5166	7.4	7.56	2189	213	1.0	7.53	88	1.0	7.54
7/27	9:15	7603	8.0	7.55	3217	215	1.0	7.52	0	0.0	0.00
7/27	9:00	7616	7.7	7.55	3225	215	1.0	7.53	0	0.0	0.00
7/27	8:45	7670	8.3	7.54	3237	216	0.9	7.50	0	0.0	0.00
7/27	8:30	7666	9.1	7.54	3253	217	0.9	7.50	0	0.0	0.00
7/27	8:15	7709	10.0	7.54	3272	218	1.0	7.49	0	0.0	0.00
7/27	8:00	5276	10.8	7.58	1852	202	1.3	7.49	46	2.5	7.53
7/27	6:00	2946	9.2	7.57	1256	218	0.9	7.54	66	0.8	7.55
7/27	5:45	7695	9.9	7.56	3291	219	0.9	7.53	0	0.0	0.00
7/27	5:30	7714	10.1	7.57	3291	220	0.9	7.54	0	0.0	0.00
7/27	5:15	7753	11.3	7.55	3306	220	0.9	7.51	0	0.0	0.00
7/27	5:00	7759	13.2	7.56	3313	221	1.0	7.51	0	0.0	0.00
7/27	4:45	7780	15.5	7.56	3325	222	1.0	7.50	0	0.0	0.00
7/27	4:30	7385	19.0	7.60	2933	213	1.2	7.51	0	0.6	7.59
7/27	2:30	5826	11.3	7.62	2446	221	0.7	7.58	108	0.7	7.59
7/27	2:15	7793	15.1	7.60	3328	222	0.9	7.55	0	0.0	0.00
7/27	2:00	7808	16.2	7.62	3317	221	0.8	7.56	0	0.0	0.00
7/27	1:45	7819	17.0	7.62	3311	221	0.7	7.54	0	0.0	0.00
7/27	1:30	4251	21.0	7.63	1542	200	0.7	7.52	0	0.7	7.59
		253240	**12.22**	**7.57**	**100000**		**1.25**	**7.53**			
7/26	20:15	1955	10.3	7.62	837	223	0.5	7.59	43	0.5	7.60
7/26	20:00	7824	12.8	7.61	3349	223	0.7	7.58	0	0.0	0.00
7/26	19:45	7836	16.1	7.63	3348	223	0.6	7.60	0	0.0	0.00
7/26	19:30	8587	21.7	7.61	1811	215	1.0	7.58	0	20.8	7.56
7/26	19:15	8553	10.2	7.61	1756	213	0.8	7.56	78	31.6	7.57
7/26	19:00	7596	9.3	7.60	3203	214	0.8	7.54	0	0.0	0.00
7/26	18:45	7614	9.9	7.60	3216	214	0.8	7.53	0	0.0	0.00
7/26	18:30	7640	10.6	7.61	3234	215	0.8	7.51	0	0.0	0.00
7/26	18:15	7221	11.9	7.63	2877	209	1.1	7.49	0	0.4	7.61
7/26	16:15	2135	9.1	7.60	953	224	0.7	7.56	83	0.7	7.57
7/26	16:00	7580	10.7	7.58	3373	225	0.9	7.55	0	0.0	0.00

7/26	15:45	7609	10.5	7.60	3373	225	0.8	7.55	0	0.0	0.00
7/26	15:30	7659	11.8	7.58	3396	226	0.9	7.53	0	0.0	0.00
7/26	15:15	7674	13.2	7.59	3402	227	0.9	7.52	0	0.0	0.00
7/26	15:00	7714	15.2	7.61	3423	228	1.1	7.51	0	0.0	0.00
7/26	14:45	5831	17.3	7.63	2379	217	1.1	7.49	0	0.6	7.57
7/26	14:00	1870	15.1	7.67	505	157	1.9	7.53	150	1.1	7.57
7/26	13:00	1657	11.4	7.65	728	224	0.7	7.58	116	0.6	7.61
7/26	12:45	7657	12.9	7.64	3363	224	0.8	7.56	0	0.0	0.00
7/26	12:30	7697	15.5	7.65	3365	225	0.9	7.55	0	0.0	0.00
7/26	12:15	7728	15.8	7.68	3366	224	0.8	7.55	0	0.0	0.00
7/26	12:00	7450	19.7	7.74	3008	215	0.8	7.52	0	0.6	7.65
7/26	10:15	2053	13.2	7.67	904	226	0.6	7.58	95	0.5	7.60
7/26	10:00	7721	14.8	7.66	3395	226	0.6	7.56	0	0.0	0.00
7/26	9:45	7750	19.1	7.67	3393	226	0.7	7.53	0	0.0	0.00
7/26	9:30	7824	25.8	7.75	3374	224	0.7	7.51	0	0.0	0.00
7/26	9:15	576	19.9	7.78	56	59	1.1	7.55	0	0.7	7.68
7/26	6:30	4639	9.6	7.65	2039	227	0.4	7.58	126	0.4	7.61
7/26	6:15	7761	11.0	7.64	3399	227	0.5	7.57	0	0.0	0.00
7/26	6:00	7789	13.3	7.64	3416	228	0.7	7.54	0	0.0	0.00
7/26	5:45	7812	16.0	7.67	3416	228	0.9	7.55	0	0.0	0.00
7/26	5:30	8248	18.8	7.72	2292	211	1.2	7.54	0	11.1	7.52
7/26	5:15	6327	19.3	7.80	22	31	1.5	7.60	11	22.2	7.52
7/26	2:00	2725	9.2	7.66	1205	219	0.5	7.58	144	0.4	7.65
7/26	1:45	7467	10.9	7.65	3297	220	0.5	7.57	0	0.0	0.00
7/26	1:30	7534	9.7	7.67	3244	219	0.4	7.57	0	0.0	0.00
7/26	1:15	7572	10.9	7.67	3300	220	0.4	7.54	0	0.0	0.00
7/26	1:00	7596	13.6	7.71	3309	221	0.5	7.52	0	0.0	0.00
7/26	:45	4533	15.5	7.82	1674	198	0.7	7.54	0	0.3	7.79
		251014	**13.89**	**7.66**	**100000**		**0.80**	**7.55**			

7/25	21:30	3665	8.5	7.70	1613	223	0.3	7.60	146	0.3	7.71
7/25	21:15	7587	10.6	7.68	3340	223	0.3	7.60	0	0.0	0.00
7/25	21:00	7640	8.9	7.70	3346	223	0.3	7.60	0	0.0	0.00
7/25	20:45	7663	10.2	7.70	3350	224	0.3	7.57	0	0.0	0.00
7/25	20:30	7722	12.4	7.74	3356	224	0.3	7.55	0	0.0	0.00
7/25	20:15	3957	12.3	7.73	1360	189	0.6	7.55	0	0.2	7.37
7/25	17:30	4104	9.0	7.75	1797	224	0.2	7.61	213	0.3	7.68
7/25	17:15	7719	10.0	7.76	3372	225	0.3	7.58	0	0.0	0.00

7/25	17:00	7758	12.0	7.80	3366	224	0.3	7.54	0	0.0	0.00
7/25	16:45	5667	14.7	7.88	1957	189	0.4	7.50	0	0.5	7.43
7/25	14:00	779	9.2	7.89	332	222	0.3	7.51	308	0.2	7.58
7/25	13:45	7845	16.9	8.11	3172	210	0.3	7.47	0	0.0	0.00
7/25	13:30	3138	20.9	8.11	47	26	0.6	7.46	0	0.4	7.50
7/25	13:15	134	75.1	7.44	0	0	0.0	0.00	0	3.8	7.97
		75378	**16.48**	**7.79**	**30408**		**0.35**	**7.55**			

1,091,169	**50.09**	**7.50**	**435,753**	**0.89**	**7.44**

August 2011 Monthly Data Summary

CLEAR WATER SERVICES

Remediation Solutions for the Real World™ – Stormwater, Groundwater, and Waste Water

MONTHLY DATA SUMMARY FOR CESF OPERATIONS

Job name: Boeing Pipeline Dewatering
Job number: 11BOE1
Month: August-11
Prepared for: Glacier Environmental Services, Inc.

DATE	PRECIP	VOLUME TREATED (Gallons)	VOLUME DISCHARGED (Gallons)	SAND FILTER INFLUENT pH	SAND FILTER INFLUENT TURBIDITY (NTU)	SAND FILTER EFFLUENT pH	SAND FILTER EFFLUENT TURBIDITY (NTU)
-	-	-	-	AVG	AVG	AVG	AVG
8/1/2011	0.00	314,310	83,007	7.13	21.49	7.13	1.56
8/2/2011	0.00	134,702	47,720	7.24	10.15	7.25	0.89
8/3/2011	0.00	192,914	68,985	7.27	9.69	7.25	0.71
8/4/2011	0.00	311,469	100,000	7.08	19.37	7.06	0.85
8/5/2011	0.00	192,445	69,180	6.98	23.19	6.89	1.05
8/6/2011	0.00						
8/7/2011	0.00						
8/8/2011	0.00	253,990	52,938	7.40	50.40	6.94	1.60
8/9/2011	0.00	283,531	100,000	7.20	48.02	6.85	1.15
8/10/2011	0.00	76,933	30,207	7.31	50.83	7.04	0.95
8/11/2011	0.00	13,976	843	7.67	65.90	7.52	2.20
8/12/2011	0.00	44,819	2,418	7.42	132.79	7.23	3.10
8/13/2011	0.00						
8/14/2011	0.00	2,770	354	7.72	117.90	7.33	2.00
8/15/2011	0.00	3,951	1,189	7.52	80.05	7.26	1.45
8/16/2011	0.00	19,323	707	7.16	98.57	7.24	2.75
8/17/2011	0.00	12,503	401	6.84	104.30	7.12	3.20
8/18/2011	0.00						
8/19/2011	0.00	3,135	484	7.43	42.95	7.15	2.70
8/20/2011	0.00						
8/21/2011	0.00						
8/22/2011	0.09						
8/23/2011	0.00						
8/24/2011	0.00	4,786	1,074	7.24	75.40	7.31	3.15
8/25/2011	0.00						
8/26/2011	0.00	7,602	217	7.23	107.60	7.36	4.20
8/27/2011	0.00						
8/28/2011	0.00						
8/29/2011	0.00	80,378	29,554	7.10	85.32	7.17	1.50
8/30/2011	0.00	116,414	50,698	6.99	43.87	6.93	0.46
8/31/2011	0.00	211,797	96,242	6.94	51.39	7.05	0.43
Monthly	**Total**	**Total**	**Total**	**AVG**	**AVG**	**AVG**	**AVG**
	0.09	**1,967,438**	**736,218**	**7.24**	**61.96**	**7.15**	**1.80**

Analytical Resources, Incorporated
Analytical Chemists and Consultants

August 8, 2011

Jeremy Davis
Landau Associates, Inc.
130 Second Ave
Edmonds, WA 98020

RE: Project: NBF – LTST 025.082.311.001
ARI Job: TH15

Dear Jeremy:

Please find enclosed the Chain of Custody (COC) record, sample receipt documentation, and analytical results for the above referenced project. Analytical Resources, Inc. (ARI) accepted two water samples in good condition on August 4, 2011. One cooler was received with a temperature of 5.4°C.

The samples were analyzed for PCBs, as requested on the COC.

There were no irregularities with the samples.

Quality control analysis results are included for your review. Copies of the reports and all associated raw data will be kept on file electronically at ARI. If you have any questions or require additional information, please contact me at your convenience.

Sincerely,
ANALYTICAL RESOURCES, INC

Kelly Bottem
Client Services Manager
(206) 695-6211
kellyb@arilabs.com
www.arilabs.com

cc: Carl Bach, The Boeing Company, P.O. Box 3707, M/S 1W-12, Seattle, WA 98124-2207

4611 South 134th Place, Suite 100 • Tukwila WA 98168 • **206-695-6200** • **206-695-6201** fax

☒ Seattle/Edmonds (425) 778-0907
☐ Tacoma (253) 926-2493
☐ Spokane (509) 327-9737
☐ Portland (503) 542-1080
☐

LANDAU ASSOCIATES

TH15

Date 8-4-11
Page 1 of 1

Chain-of-Custody Record

Project Name NBF-LTST-RR Project No. 0025.082.311.001
Project Location/Event NBF-LTST-RR
Sampler's Name LKM
Project Contact JMD/ Carl Bach
Send Results To JMD / Carl Bach / Joe Kalmar

Testing Parameters: PCBs & MTCA

Turnaround Time
☐ Standard
☒ Accelerated
☒ ~~[illegible]~~ 72 hours

Sample I.D.	Date	Time	Matrix	No. of Containers
NBF-DTS-A-080411	8-4-11	1105	Water	2
NBF-DTS-B-080411	8-4-11	1108	Water	2

Observations/Comments

X ~~Allow water samples to settle, collect aliquot from clear portion~~ N/A LKM

X ~~NWTPH-Dx - run acid wash/silica gel cleanup~~ N/A LKM

___ run samples standardized to _____ product

___ Analyze for EPH if no specific product identified

VOC/BTEX/VPH (soil):
___ non-preserved
___ preserved w/methanol
___ preserved w/sodium bisulfate
___ Freeze upon receipt

___ Dissolved metal water samples field filtered

Other ~~PCBs~~ MTCA PCBs

Special Shipment/Handling or Storage Requirements: coolers with ice & custody seal

Method of Shipment: Drop off @ ARI

Relinquished by	Received by	Relinquished by	Received by
Signature: [signature]	Signature: [signature]	Signature	Signature
Printed Name: Lauren McIntire	Printed Name: Jennifer Millsap	Printed Name	Printed Name
Company: Landau Associates, Inc.	Company: ARI	Company	Company
Date: 8-4-11 Time: 1351	Date: 8/4/11 Time: 1350	Date Time	Date Time

WHITE COPY - Project File YELLOW COPY - Laboratory PINK COPY - Client Representative

Rev 8/09

Sample ID Cross Reference Report

ANALYTICAL RESOURCES INCORPORATED

ARI Job No: TH15
Client: The Boeing Company
Project Event: 0025.082.311.001
Project Name: NBF-LTST-RR

	Sample ID	ARI Lab ID	ARI LIMS ID	Matrix	Sample Date/Time	VTSR
1.	NBF-DTS-A-080411	TH15A	11-16930	Water	08/04/11 11:05	08/04/11 13:50
2.	NBF-DTS-B-080411	TH15B	11-16931	Water	08/04/11 11:08	08/04/11 13:50

Printed 08/04/11

Analytical Resources, Incorporated
Analytical Chemists and Consultants

Cooler Receipt Form

ARI Client: Boeing

COC No(s): _____ NA

Assigned ARI Job No: THI5

Project Name: MBF - LTST - RK

Delivered by: Fed-Ex UPS Courier Hand Delivered Other: _____

Tracking No: _____ NA

Preliminary Examination Phase:

Were intact, properly signed and dated custody seals attached to the outside of to cooler?	YES	NO
Were custody papers included with the cooler?	YES	NO
Were custody papers properly filled out (ink, signed, etc.)	YES	NO

Temperature of Cooler(s) (°C) (recommended 2.0-6.0 °C for chemistry) 5.4 ___ ___ ___ ___

If cooler temperature is out of compliance fill out form 00070F

Temp Gun ID#: 90947619

Cooler Accepted by: JM Date: 8/4/11 Time: 1350

Complete custody forms and attach all shipping documents

Log-In Phase:

Was a temperature blank included in the cooler?		YES	NO
What kind of packing material was used? ... Bubble Wrap Wet Ice Gel Packs Baggies Foam Block Paper Other: _____			
Was sufficient ice used (if appropriate)?	NA	YES	NO
Were all bottles sealed in individual plastic bags?		YES	NO
Did all bottles arrive in good condition (unbroken)?		YES	NO
Were all bottle labels complete and legible?		YES	NO
Did the number of containers listed on COC match with the number of containers received?		YES	NO
Did all bottle labels and tags agree with custody papers?		YES	NO
Were all bottles used correct for the requested analyses?		YES	NO
Do any of the analyses (bottles) require preservation? (attach preservation sheet, excluding VOCs)	NA	YES	NO
Were all VOC vials free of air bubbles?	NA	YES	NO
Was sufficient amount of sample sent in each bottle?		YES	NO
Date VOC Trip Blank was made at ARI	NA	_____	

Was Sample Split by ARI : NA YES Date/Time: _____ Equipment: _____ Split by: _____

Samples Logged by: AV Date: 8/4/11 Time: 1440

*** Notify Project Manager of discrepancies or concerns ***

Sample ID on Bottle	Sample ID on COC	Sample ID on Bottle	Sample ID on COC

Additional Notes, Discrepancies, & Resolutions:

By: Date:

Small Air Bubbles <2mm	Peabubbles 2-4 mm	LARGE Air Bubbles > 4 mm	
			Small → "sm"
			Peabubbles → "pb"
			Large → "lg"
			Headspace → "hs"

ANALYTICAL RESOURCES INCORPORATED

ORGANICS ANALYSIS DATA SHEET
PCB by GC/ECD Method SW8082

Sample ID: NBF-DTS-A-080411
SAMPLE

Lab Sample ID: TH15A
LIMS ID: 11-16930
Matrix: Water
Data Release Authorized:
Reported: 08/08/11

QC Report No: TH15-The Boeing Company
Project: NBF-LTST-RR
0025.082.311.001
Date Sampled: 08/04/11
Date Received: 08/04/11

Date Extracted: 08/04/11
Date Analyzed: 08/05/11 15:01
Instrument/Analyst: ECD5/AAR
GPC Cleanup: No
Sulfur Cleanup: Yes

Sample Amount: 500 mL
Final Extract Volume: 1.0 mL
Dilution Factor: 1.00
Silica Gel: No
Acid Cleanup: Yes

CAS Number	Analyte	RL	Result
12674-11-2	Aroclor 1016	0.10	< 0.10 U
53469-21-9	Aroclor 1242	0.10	< 0.10 U
12672-29-6	Aroclor 1248	0.10	< 0.10 U
11097-69-1	Aroclor 1254	0.10	< 0.10 U
11096-82-5	Aroclor 1260	0.10	< 0.10 U
11104-28-2	Aroclor 1221	0.10	< 0.10 U
11141-16-5	Aroclor 1232	0.10	< 0.10 U
37324-23-5	Aroclor 1262	0.10	< 0.10 U

Reported in µg/L (ppb)

PCB Surrogate Recovery

Decachlorobiphenyl	69.8%
Tetrachlorometaxylene	58.2%

ANALYTICAL RESOURCES INCORPORATED

ORGANICS ANALYSIS DATA SHEET
PCB by GC/ECD Method SW8082

Sample ID: NBF-DTS-B-080411
SAMPLE

Lab Sample ID: TH15B
LIMS ID: 11-16931
Matrix: Water
Data Release Authorized:
Reported: 08/08/11

QC Report No: TH15-The Boeing Company
Project: NBF-LTST-RR
0025.082.311.001
Date Sampled: 08/04/11
Date Received: 08/04/11

Date Extracted: 08/05/11
Date Analyzed: 08/06/11 14:26
Instrument/Analyst: ECD7/JGR
GPC Cleanup: No
Sulfur Cleanup: Yes

Sample Amount: 500 mL
Final Extract Volume: 1.0 mL
Dilution Factor: 1.00
Silica Gel: No
Acid Cleanup: Yes

CAS Number	Analyte	RL	Result
12674-11-2	Aroclor 1016	0.10	< 0.10 U
53469-21-9	Aroclor 1242	0.10	< 0.10 U
12672-29-6	Aroclor 1248	0.10	< 0.10 U
11097-69-1	Aroclor 1254	0.10	< 0.10 U
11096-82-5	Aroclor 1260	0.10	< 0.10 U
11104-28-2	Aroclor 1221	0.10	< 0.10 U
11141-16-5	Aroclor 1232	0.10	< 0.10 U
37324-23-5	Aroclor 1262	0.10	< 0.10 U

Reported in µg/L (ppb)

PCB Surrogate Recovery

Decachlorobiphenyl	69.8%
Tetrachlorometaxylene	50.2%

ANALYTICAL RESOURCES INCORPORATED

ORGANICS ANALYSIS DATA SHEET
PCB by GC/ECD Method SW8082

Sample ID: MB-080511
METHOD BLANK

Lab Sample ID: MB-080511
LIMS ID: 11-16931
Matrix: Water
Data Release Authorized:
Reported: 08/08/11

QC Report No: TH15-The Boeing Company
Project: NBF-LTST-RR
0025.082.311.001
Date Sampled: NA
Date Received: NA

Date Extracted: 08/05/11
Date Analyzed: 08/06/11 13:17
Instrument/Analyst: ECD7/JGR
GPC Cleanup: No
Sulfur Cleanup: Yes

Sample Amount: 500 mL
Final Extract Volume: 1.0 mL
Dilution Factor: 1.00
Silica Gel: No
Acid Cleanup: Yes

CAS Number	Analyte	RL	Result
12674-11-2	Aroclor 1016	0.10	< 0.10 U
53469-21-9	Aroclor 1242	0.10	< 0.10 U
12672-29-6	Aroclor 1248	0.10	< 0.10 U
11097-69-1	Aroclor 1254	0.10	< 0.10 U
11096-82-5	Aroclor 1260	0.10	< 0.10 U
11104-28-2	Aroclor 1221	0.10	< 0.10 U
11141-16-5	Aroclor 1232	0.10	< 0.10 U
37324-23-5	Aroclor 1262	0.10	< 0.10 U

Reported in µg/L (ppb)

PCB Surrogate Recovery

Decachlorobiphenyl	77.2%
Tetrachlorometaxylene	52.2%

ANALYTICAL RESOURCES INCORPORATED

ORGANICS ANALYSIS DATA SHEET
PCB by GC/ECD Method SW8082

Sample ID: MB-080411
METHOD BLANK

Lab Sample ID: MB-080411
LIMS ID: 11-16930
Matrix: Water
Data Release Authorized:
Reported: 08/08/11

QC Report No: TH15-The Boeing Company
Project: NBF-LTST-RR
0025.082.311.001
Date Sampled: NA
Date Received: NA

Date Extracted: 08/04/11
Date Analyzed: 08/05/11 14:04
Instrument/Analyst: ECD5/AAR
GPC Cleanup: No
Sulfur Cleanup: Yes

Sample Amount: 500 mL
Final Extract Volume: 1.0 mL
Dilution Factor: 1.00
Silica Gel: No
Acid Cleanup: Yes

CAS Number	Analyte	RL	Result
12674-11-2	Aroclor 1016	0.10	< 0.10 U
53469-21-9	Aroclor 1242	0.10	< 0.10 U
12672-29-6	Aroclor 1248	0.10	< 0.10 U
11097-69-1	Aroclor 1254	0.10	< 0.10 U
11096-82-5	Aroclor 1260	0.10	< 0.10 U
11104-28-2	Aroclor 1221	0.10	< 0.10 U
11141-16-5	Aroclor 1232	0.10	< 0.10 U
37324-23-5	Aroclor 1262	0.10	< 0.10 U

Reported in µg/L (ppb)

PCB Surrogate Recovery

Decachlorobiphenyl	64.8%
Tetrachlorometaxylene	53.5%

ANALYTICAL RESOURCES INCORPORATED

SW8082/PCB WATER SURROGATE RECOVERY SUMMARY

Matrix: Water

QC Report No: TH15-The Boeing Company
Project: NBF-LTST-RR
0025.082.311.001

Client ID	DCBP % REC	DCBP LCL-UCL	TCMX % REC	TCMX LCL-UCL	TOT OUT
MB-080511	77.2%	39-116	52.2%	29-100	0
LCS-080511	78.0%	39-116	57.2%	29-100	0
LCSD-080511	73.5%	39-116	57.0%	29-100	0
NBF-DTS-B-080411	69.8%	10-128	50.2%	25-100	0

Prep Method: SW3510C
Log Number Range: 11-16931 to 11-16931

FORM-II SW8082

ANALYTICAL RESOURCES INCORPORATED

SW8082/PCB WATER SURROGATE RECOVERY SUMMARY

Matrix: Water

QC Report No: TH15-The Boeing Company
Project: NBF-LTST-RR
0025.082.311.001

Client ID	DCBP % REC	DCBP LCL-UCL	TCMX % REC	TCMX LCL-UCL	TOT OUT
MB-080411	64.8%	39-116	53.5%	29-100	0
LCS-080411	64.2%	39-116	49.8%	29-100	0
LCSD-080411	67.5%	39-116	50.5%	29-100	0
NBF-DTS-A-080411	69.8%	10-128	58.2%	25-100	0

Prep Method: SW3510C
Log Number Range: 11-16930 to 11-16930

FORM-II SW8082

ANALYTICAL RESOURCES INCORPORATED

ORGANICS ANALYSIS DATA SHEET
PCB by GC/ECD Method SW8082

Sample ID: LCS-080511
LCS/LCSD

Lab Sample ID: LCS-080511
LIMS ID: 11-16931
Matrix: Water
Data Release Authorized:
Reported: 08/08/11

QC Report No: TH15-The Boeing Company
Project: NBF-LTST-RR
0025.082.311.001
Date Sampled: NA
Date Received: NA

Date Extracted LCS/LCSD: 08/05/11

Date Analyzed LCS: 08/06/11 13:40
LCSD: 08/06/11 14:03
Instrument/Analyst LCS: ECD7/JGR
LCSD: ECD7/JGR
GPC Cleanup: No
Sulfur Cleanup: Yes

Sample Amount LCS: 500 mL
LCSD: 500 mL
Final Extract Volume LCS: 1.0 mL
LCSD: 1.0 mL
Dilution Factor LCS: 1.00
LCSD: 1.00
Silica Gel: No
Acid Cleanup: Yes

Analyte	LCS	Spike Added-LCS	LCS Recovery	LCSD	Spike Added-LCSD	LCSD Recovery	RPD
Aroclor 1016	0.631	1.00	63.1%	0.617	1.00	61.7%	2.2%
Aroclor 1260	0.754	1.00	75.4%	0.713	1.00	71.3%	5.6%

PCB Surrogate Recovery

	LCS	LCSD
Decachlorobiphenyl	78.0%	73.5%
Tetrachlorometaxylene	57.2%	57.0%

Results reported in µg/L
RPD calculated using sample concentrations per SW846.

ANALYTICAL RESOURCES INCORPORATED

ORGANICS ANALYSIS DATA SHEET
PCB by GC/ECD Method SW8082

Sample ID: LCS-080411
LCS/LCSD

Lab Sample ID: LCS-080411
LIMS ID: 11-16930
Matrix: Water
Data Release Authorized:
Reported: 08/08/11

QC Report No: TH15-The Boeing Company
Project: NBF-LTST-RR
0025.082.311.001
Date Sampled: NA
Date Received: NA

Date Extracted LCS/LCSD: 08/04/11

Date Analyzed LCS: 08/05/11 14:23
LCSD: 08/05/11 14:42
Instrument/Analyst LCS: ECD5/AAR
LCSD: ECD5/AAR
GPC Cleanup: No
Sulfur Cleanup: Yes

Sample Amount LCS: 500 mL
LCSD: 500 mL
Final Extract Volume LCS: 1.0 mL
LCSD: 1.0 mL
Dilution Factor LCS: 1.00
LCSD: 1.00
Silica Gel: No
Acid Cleanup: Yes

Analyte	LCS	Spike Added-LCS	LCS Recovery	LCSD	Spike Added-LCSD	LCSD Recovery	RPD
Aroclor 1016	0.702	1.00	70.2%	0.677	1.00	67.7%	3.6%
Aroclor 1260	0.783	1.00	78.3%	0.810	1.00	81.0%	3.4%

PCB Surrogate Recovery

	LCS	LCSD
Decachlorobiphenyl	64.2%	67.5%
Tetrachlorometaxylene	49.8%	50.5%

Results reported in µg/L
RPD calculated using sample concentrations per SW846.

Analytical Resources, Incorporated
Analytical Chemists and Consultants

August 15, 2011

Jeremy Davis
Landau Associates, Inc.
130 Second Ave
Edmonds, WA 98020

RE: Project: NBF – LTST 025.082.311.001
ARI Job: TI03

Dear Jeremy:

Please find enclosed the Chain of Custody (COC) record, sample receipt documentation, and analytical results for the above referenced project. Analytical Resources, Inc. (ARI) accepted one soil sample and two water samples in good condition on August 10, 2011. One cooler was received with a temperature of 9.8°C.

The samples were analyzed for PCBs, NWTPH-Dx, NWTPH-Gx and Total Metals, as requested on the COC.

There were no irregularities with the samples.

Quality control analysis results are included for your review. Copies of the reports and all associated raw data will be kept on file electronically at ARI. If you have any questions or require additional information, please contact me at your convenience.

Sincerely,
ANALYTICAL RESOURCES, INC

Kelly Bottem
Client Services Manager
(206) 695-6211
kellyb@arilabs.com
www.arilabs.com

cc: Carl Bach, The Boeing Company, P.O. Box 3707, M/S 1W-12, Seattle, WA 98124-2207

4611 South 134th Place, Suite 100 • Tukwila WA 98168 • **206-695-6200** • **206-695-6201** fax

☒ Seattle/Edmonds (425) 778-0907
☐ Tacoma (253) 926-2493
☐ Spokane (509) 327-9737
☐ Portland (503) 542-1080
☐ _____

LANDAU ASSOCIATES

Chain-of-Custody Record

Date 8/10/11
Page 1 of 1

Project Name NBF
Project No. 025.082.311.001
Project Location/Event NBF-LTST / DTS
Sampler's Name JEREMY DAVIS
Project Contact Jeremy D Carl B, Joe K.
Send Results To Same as Above

Turnaround Time
☐ Standard
☒ Accelerated
3 DAYS

Testing Parameters

Sample I.D.	Date	Time	Matrix	No. of Containers	MTCA PCBs	PCBs	NWTPH-Dx	NWTPH-Gx	Metals (MTCA-5)	Observations/Comments
NBF-RRSS-A-081011	8/10/11	1015	S	2		X	X	X	X	
NBF-DTS-A-081011	"	0940	W	2	X					
NBF-DTS-B-081011	"	0945	W	2	X					

X ~~Allow water samples to settle, collect aliquot from clear portion~~ SMD
X ~~NWTPH-Dx run acid wash/silica gel cleanup~~ SMD
Not Nec.

___ run samples standardized to _____ product

___ Analyze for EPH if no specific product identified

VOC/BTEX/VPH (soil):
___ non-preserved
___ preserved w/methanol
___ preserved w/sodium bisulfate
___ Freeze upon receipt

___ Dissolved metal water samples field filtered

Other Arsenic, Cadmium, Chromium, Mercury, Lead

Special Shipment/Handling or Storage Requirements Cooler w/ Wet ICE

Method of Shipment DROP OFF AT ARI

Relinquished by	Received by	Relinquished by	Received by
Signature JEREMY DAVIS	Signature A. Volgardsen	Signature	Signature
Printed Name LAI	Printed Name ARI	Printed Name	Printed Name
Company	Company	Company	Company
Date 8/10/11 Time 1145	Date 8/10/11 Time 1145	Date ____ Time ____	Date ____ Time ____

WHITE COPY - Project File YELLOW COPY - Laboratory PINK COPY - Client Representative

Rev 8/09

Sample ID Cross Reference Report

ANALYTICAL RESOURCES INCORPORATED

ARI Job No: TI03
Client: The Boeing Company
Project Event: 025.082.311.001
Project Name: NBF-LTST/DTS

	Sample ID	ARI Lab ID	ARI LIMS ID	Matrix	Sample Date/Time	VTSR
1.	NBF-RRSS-A-081011	TI03A	11-17425	Soil	08/09/11 10:15	08/10/11 11:45
2.	NBF-DTS-A-081011	TI03B	11-17426	Water	08/09/11 09:40	08/10/11 11:45
3.	NBF-DTS-B-081011	TI03C	11-17427	Water	08/09/11 09:45	08/10/11 11:45

Printed 08/10/11

Analytical Resources, Incorporated
Analytical Chemists and Consultants

Cooler Receipt Form

ARI Client: Boeing

Project Name: NBF-LTST/DTS

COC No(s): _____ (NA)

Delivered by: Fed-Ex UPS Courier Hand Delivered Other _____

Assigned ARI Job No: TJ03

Tracking No: _____ NA

Preliminary Examination Phase:

Were intact, properly signed and dated custody seals attached to the outside of to cooler?	YES	NO
Were custody papers included with the cooler?	YES	NO
Were custody papers properly filled out (ink, signed, etc.)	YES	NO

Temperature of Cooler(s) (°C) (recommended 2.0-6.0 °C for chemistry): 9.8

If cooler temperature is out of compliance fill out form 00070F

Temp Gun ID#: 90941619

Cooler Accepted by: AV Date: 8/10/11 Time: 1145

Complete custody forms and attach all shipping documents

Log-In Phase:

Was a temperature blank included in the cooler?		YES	NO
What kind of packing material was used?	Bubble Wrap, Wet Ice, Gel Packs, Baggies, Foam Block, Paper, Other:		
Was sufficient ice used (if appropriate)?	NA	YES	NO
Were all bottles sealed in individual plastic bags?		YES	NO
Did all bottles arrive in good condition (unbroken)?		YES	NO
Were all bottle labels complete and legible?		YES	NO
Did the number of containers listed on COC match with the number of containers received?		YES	NO
Did all bottle labels and tags agree with custody papers?		YES	NO
Were all bottles used correct for the requested analyses?		YES	NO
Do any of the analyses (bottles) require preservation? (attach preservation sheet, excluding VOCs)	NA	YES	NO
Were all VOC vials free of air bubbles?	NA	YES	~~NO~~ JM
Was sufficient amount of sample sent in each bottle?		YES	NO
Date VOC Trip Blank was made at ARI	NA		

Was Sample Split by ARI: NA YES Date/Time: _____ Equipment: _____ Split by: _____

Samples Logged by: JM Date: 8/10/11 Time: 1145

***** Notify Project Manager of discrepancies or concerns *****

Sample ID on Bottle	Sample ID on COC	Sample ID on Bottle	Sample ID on COC

Additional Notes, Discrepancies, & Resolutions:

By: Date

Small Air Bubbles ~2mm	Peabubbles 2-4 mm	LARGE Air Bubbles > 4 mm
	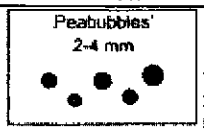	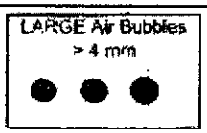

Small → "sm"
Peabubbles → "pb"
Large → "lg"
Headspace → "hs"

Analytical Resources, Incorporated
Analytical Chemists and Consultants

Cooler Temperature Compliance Form

TI03

Cooler#: 1	Temperature(°C): 9.8	
Sample ID	**Bottle Count**	**Bottle Type**
ABF-RRSS-A-081011	2	1-2oz WMG, 1-16oz WMG
ABF-DTS-A-081011	2	2-500 ml AG
ABF-DTS-B-081011	2	↓

Cooler#:	Temperature(°C):	
Sample ID	**Bottle Count**	**Bottle Type**

Cooler#:	Temperature(°C):	
Sample ID	**Bottle Count**	**Bottle Type**

Cooler#:	Temperature(°C):	
Sample ID	**Bottle Count**	**Bottle Type**

Completed by: JM Date: 8/16/11 Time: 1156

ANALYTICAL RESOURCES INCORPORATED

ORGANICS ANALYSIS DATA SHEET
PCB by GC/ECD Method SW8082

Sample ID: NBF-DTS-A-081011
SAMPLE

Lab Sample ID: TI03B
LIMS ID: 11-17426
Matrix: Water
Data Release Authorized:
Reported: 08/12/11

QC Report No: TI03-The Boeing Company
Project: NBF-LTST/DTS
025.082.311.001
Date Sampled: 08/09/11
Date Received: 08/10/11

Date Extracted: 08/11/11
Date Analyzed: 08/12/11 10:07
Instrument/Analyst: ECD5/JGR
GPC Cleanup: No
Sulfur Cleanup: Yes

Sample Amount: 500 mL
Final Extract Volume: 1.0 mL
Dilution Factor: 1.00
Silica Gel: No
Acid Cleanup: Yes

CAS Number	Analyte	RL	Result
12674-11-2	Aroclor 1016	0.10	< 0.10 U
53469-21-9	Aroclor 1242	0.10	< 0.10 U
12672-29-6	Aroclor 1248	0.10	< 0.10 U
11097-69-1	Aroclor 1254	0.10	< 0.10 U
11096-82-5	Aroclor 1260	0.10	< 0.10 U
11104-28-2	Aroclor 1221	0.10	< 0.10 U
11141-16-5	Aroclor 1232	0.10	< 0.10 U
37324-23-5	Aroclor 1262	0.10	< 0.10 U

Reported in µg/L (ppb)

PCB Surrogate Recovery

Decachlorobiphenyl	82.5%
Tetrachlorometaxylene	90.0%

ANALYTICAL RESOURCES INCORPORATED

ORGANICS ANALYSIS DATA SHEET
PCB by GC/ECD Method SW8082

Sample ID: NBF-DTS-B-081011
SAMPLE

Lab Sample ID: TI03C
LIMS ID: 11-17427
Matrix: Water
Data Release Authorized:
Reported: 08/12/11

QC Report No: TI03-The Boeing Company
Project: NBF-LTST/DTS
025.082.311.001
Date Sampled: 08/09/11
Date Received: 08/10/11

Date Extracted: 08/11/11
Date Analyzed: 08/12/11 10:26
Instrument/Analyst: ECD5/JGR
GPC Cleanup: No
Sulfur Cleanup: Yes

Sample Amount: 500 mL
Final Extract Volume: 1.0 mL
Dilution Factor: 1.00
Silica Gel: No
Acid Cleanup: Yes

CAS Number	Analyte	RL	Result
12674-11-2	Aroclor 1016	0.10	< 0.10 U
53469-21-9	Aroclor 1242	0.10	< 0.10 U
12672-29-6	Aroclor 1248	0.10	< 0.10 U
11097-69-1	Aroclor 1254	0.10	< 0.10 U
11096-82-5	Aroclor 1260	0.10	< 0.10 U
11104-28-2	Aroclor 1221	0.10	< 0.10 U
11141-16-5	Aroclor 1232	0.10	< 0.10 U
37324-23-5	Aroclor 1262	0.10	< 0.10 U

Reported in µg/L (ppb)

PCB Surrogate Recovery

Decachlorobiphenyl	80.2%
Tetrachlorometaxylene	84.5%

ANALYTICAL RESOURCES INCORPORATED

ORGANICS ANALYSIS DATA SHEET
PCB by GC/ECD Method SW8082

Sample ID: MB-081111
METHOD BLANK

Lab Sample ID: MB-081111
LIMS ID: 11-17426
Matrix: Water
Data Release Authorized:
Reported: 08/12/11

QC Report No: TI03-The Boeing Company
Project: NBF-LTST/DTS
025.082.311.001
Date Sampled: NA
Date Received: NA

Date Extracted: 08/11/11
Date Analyzed: 08/12/11 09:11
Instrument/Analyst: ECD5/JGR
GPC Cleanup: No
Sulfur Cleanup: Yes

Sample Amount: 500 mL
Final Extract Volume: 1.0 mL
Dilution Factor: 1.00
Silica Gel: No
Acid Cleanup: Yes

CAS Number	Analyte	RL	Result
12674-11-2	Aroclor 1016	0.10	< 0.10 U
53469-21-9	Aroclor 1242	0.10	< 0.10 U
12672-29-6	Aroclor 1248	0.10	< 0.10 U
11097-69-1	Aroclor 1254	0.10	< 0.10 U
11096-82-5	Aroclor 1260	0.10	< 0.10 U
11104-28-2	Aroclor 1221	0.10	< 0.10 U
11141-16-5	Aroclor 1232	0.10	< 0.10 U
37324-23-5	Aroclor 1262	0.10	< 0.10 U

Reported in µg/L (ppb)

PCB Surrogate Recovery

Decachlorobiphenyl	83.8%
Tetrachlorometaxylene	85.5%

ANALYTICAL RESOURCES INCORPORATED

SW8082/PCB WATER SURROGATE RECOVERY SUMMARY

Matrix: Water

QC Report No: TI03-The Boeing Company
Project: NBF-LTST/DTS
025.082.311.001

Client ID	DCBP % REC	DCBP LCL-UCL	TCMX % REC	TCMX LCL-UCL	TOT OUT
MB-081111	83.8%	39-116	85.5%	29-100	0
LCS-081111	83.0%	39-116	88.5%	29-100	0
LCSD-081111	80.8%	39-116	90.5%	29-100	0
NBF-DTS-A-081011	82.5%	10-128	90.0%	25-100	0
NBF-DTS-B-081011	80.2%	10-128	84.5%	25-100	0

Prep Method: SW3510C
Log Number Range: 11-17426 to 11-17427

FORM-II SW8082

ANALYTICAL RESOURCES INCORPORATED

ORGANICS ANALYSIS DATA SHEET
PCB by GC/ECD Method SW8082

Sample ID: LCS-081111
LCS/LCSD

Lab Sample ID: LCS-081111
LIMS ID: 11-17426
Matrix: Water
Data Release Authorized:
Reported: 08/12/11

QC Report No: TI03-The Boeing Company
Project: NBF-LTST/DTS
025.082.311.001
Date Sampled: NA
Date Received: NA

Date Extracted LCS/LCSD: 08/11/11

Date Analyzed LCS: 08/12/11 09:30
LCSD: 08/12/11 09:48
Instrument/Analyst LCS: ECD5/JGR
LCSD: ECD5/JGR
GPC Cleanup: No
Sulfur Cleanup: Yes

Sample Amount LCS: 500 mL
LCSD: 500 mL
Final Extract Volume LCS: 1.0 mL
LCSD: 1.0 mL
Dilution Factor LCS: 1.00
LCSD: 1.00
Silica Gel: No
Acid Cleanup: Yes

Analyte	LCS	Spike Added-LCS	LCS Recovery	LCSD	Spike Added-LCSD	LCSD Recovery	RPD
Aroclor 1016	0.880	1.00	88.0%	0.918	1.00	91.8%	4.2%
Aroclor 1260	0.843	1.00	84.3%	0.830	1.00	83.0%	1.6%

PCB Surrogate Recovery

	LCS	LCSD
Decachlorobiphenyl	83.0%	80.8%
Tetrachlorometaxylene	88.5%	90.5%

Results reported in µg/L
RPD calculated using sample concentrations per SW846.

ANALYTICAL RESOURCES INCORPORATED

ORGANICS ANALYSIS DATA SHEET
PCB by GC/ECD Method SW8082

Sample ID: NBF-RRSS-A-081011
SAMPLE

Lab Sample ID: TI03A
LIMS ID: 11-17425
Matrix: Soil
Data Release Authorized:
Reported: 08/15/11

QC Report No: TI03-The Boeing Company
Project: NBF-LTST/DTS
025.082.311.001
Date Sampled: 08/09/11
Date Received: 08/10/11

Date Extracted: 08/11/11
Date Analyzed: 08/12/11 17:03
Instrument/Analyst: ECD5/AAR
GPC Cleanup: No
Sulfur Cleanup: Yes
Acid Cleanup: Yes
Florisil Cleanup: No

Sample Amount: 12.7 g-dry-wt
Final Extract Volume: 4.00 mL
Dilution Factor: 1.00
Silica Gel: No

Percent Moisture: 4.8%

CAS Number	Analyte	RL	Result
12674-11-2	Aroclor 1016	32	< 32 U
53469-21-9	Aroclor 1242	32	< 32 U
12672-29-6	Aroclor 1248	32	< 32 U
11097-69-1	Aroclor 1254	32	< 32 U
11096-82-5	Aroclor 1260	32	< 32 U
11104-28-2	Aroclor 1221	32	< 32 U
11141-16-5	Aroclor 1232	32	< 32 U
37324-23-5	Aroclor 1262	32	< 32 U

Reported in µg/kg (ppb)

PCB Surrogate Recovery

Decachlorobiphenyl	64.8%
Tetrachlorometaxylene	80.0%

ANALYTICAL RESOURCES INCORPORATED

ORGANICS ANALYSIS DATA SHEET
PCB by GC/ECD Method SW8082

Sample ID: MB-081111
METHOD BLANK

Lab Sample ID: MB-081111
LIMS ID: 11-17425
Matrix: Soil
Data Release Authorized:
Reported: 08/15/11

QC Report No: TI03-The Boeing Company
Project: NBF-LTST/DTS
025.082.311.001
Date Sampled: NA
Date Received: NA

Date Extracted: 08/11/11
Date Analyzed: 08/12/11 16:07
Instrument/Analyst: ECD5/AAR
GPC Cleanup: No
Sulfur Cleanup: Yes
Acid Cleanup: Yes
Florisil Cleanup: No

Sample Amount: 12.0 g
Final Extract Volume: 4.00 mL
Dilution Factor: 1.00
Silica Gel: No

Percent Moisture: NA

CAS Number	Analyte	RL	Result
12674-11-2	Aroclor 1016	33	< 33 U
53469-21-9	Aroclor 1242	33	< 33 U
12672-29-6	Aroclor 1248	33	< 33 U
11097-69-1	Aroclor 1254	33	< 33 U
11096-82-5	Aroclor 1260	33	< 33 U
11104-28-2	Aroclor 1221	33	< 33 U
11141-16-5	Aroclor 1232	33	< 33 U
37324-23-5	Aroclor 1262	33	< 33 U

Reported in µg/kg (ppb)

PCB Surrogate Recovery

Decachlorobiphenyl	70.8%
Tetrachlorometaxylene	80.2%

ANALYTICAL RESOURCES INCORPORATED

SW8082/PCB SOIL/SEDIMENT SURROGATE RECOVERY SUMMARY

Matrix: Soil

QC Report No: TI03-The Boeing Company
Project: NBF-LTST/DTS
025.082.311.001

Client ID	DCBP % REC	DCBP LCL-UCL	TCMX % REC	TCMX LCL-UCL	TOT OUT
MB-081111	70.8%	51-112	80.2%	46-111	0
LCS-081111	69.0%	51-112	79.8%	46-111	0
LCSD-081111	70.8%	51-112	82.8%	46-111	0
NBF-RRSS-A-081011	64.8%	42-127	80.0%	50-114	0

Microwave (MARS) Control Limits
Prep Method: SW3546
Log Number Range: 11-17425 to 11-17425

FORM-II SW8082

ANALYTICAL RESOURCES INCORPORATED

ORGANICS ANALYSIS DATA SHEET
PCB by GC/ECD Method SW8082

Sample ID: LCS-081111
LCS/LCSD

Lab Sample ID: LCS-081111
LIMS ID: 11-17425
Matrix: Soil
Data Release Authorized:
Reported: 08/15/11

QC Report No: TI03-The Boeing Company
Project: NBF-LTST/DTS
025.082.311.001
Date Sampled: NA
Date Received: NA

Date Extracted LCS/LCSD: 08/11/11

Date Analyzed LCS: 08/12/11 16:26
LCSD: 08/12/11 16:44
Instrument/Analyst LCS: ECD5/AAR
LCSD: ECD5/AAR
GPC Cleanup: No
Sulfur Cleanup: Yes
Acid Cleanup: Yes
Florisil Cleanup: No

Sample Amount LCS: 12.0 g-dry-wt
LCSD: 12.0 g-dry-wt
Final Extract Volume LCS: 4.00 mL
LCSD: 4.00 mL
Dilution Factor LCS: 1.00
LCSD: 1.00
Silica Gel: No

Percent Moisture: NA

Analyte	LCS	Spike Added-LCS	LCS Recovery	LCSD	Spike Added-LCSD	LCSD Recovery	RPD
Aroclor 1016	136	167	81.4%	141	167	84.4%	3.6%
Aroclor 1260	114	167	68.3%	125	167	74.9%	9.2%

PCB Surrogate Recovery

	LCS	LCSD
Decachlorobiphenyl	69.0%	70.8%
Tetrachlorometaxylene	79.8%	82.8%

Results reported in µg/kg (ppb)
RPD calculated using sample concentrations per SW846.

ANALYTICAL RESOURCES INCORPORATED

ORGANICS ANALYSIS DATA SHEET
TPHG by Method NWTPHG
Matrix: Soil

Data Release Authorized:
Reported: 08/12/11

QC Report No: TI03-The Boeing Company
Project: NBF-LTST/DTS
Event: 025.082.311.001
Date Sampled: 08/09/11
Date Received: 08/10/11

ARI ID	Client ID	Analysis Date	Basis	Range	Result
MB-081111	Method Blank	08/11/11	Dry	Gasoline	< 5.0 U
11-17425		PID2		HC ID	---
				Trifluorotoluene	96.3%
				Bromobenzene	100%
TI03A	NBF-RRSS-A-081011	08/11/11	Dry	Gasoline	< 5.5 U
11-17425		PID2		HC ID	---
				Trifluorotoluene	95.9%
				Bromobenzene	97.5%

Gasoline values reported in mg/kg (ppm)

Quantitation on total peaks in the gasoline range from Toluene to Naphthalene.

GAS: Indicates the presence of gasoline or weathered gasoline.
GRO: Positive result that does not match an identifiable gasoline pattern.

Results corrected for soil moisture content per Section 11.10.5 of EPA Method 8000C.

ANALYTICAL RESOURCES INCORPORATED

TPHG SOIL SURROGATE RECOVERY SUMMARY

ARI Job: TI03
Matrix: Soil

QC Report No: TI03-The Boeing Company
Project: NBF-LTST/DTS
Event: 025.082.311.001

Client ID	BFB	TFT	BBZ	TOT OUT
MB-081111	NA	96.3%	100%	0
LCS-081111	NA	105%	104%	0
LCSD-081111	NA	106%	107%	0
NBF-RRSS-A-081011	NA	95.9%	97.5%	0

	LCS/MB LIMITS	QC LIMITS
(BFB) = Bromofluorobenzene	(70-130)	(70-130)
(TFT) = Trifluorotoluene	(80-120)	(66-123)
(BBZ) = Bromobenzene	(80-120)	(62-130)

Log Number Range: 11-17425 to 11-17425

FORM II TPHG

ANALYTICAL RESOURCES INCORPORATED

ORGANICS ANALYSIS DATA SHEET
TPHG by Method NWTPHG

Sample ID: LCS-081111
LAB CONTROL SAMPLE

Lab Sample ID: LCS-081111
LIMS ID: 11-17425
Matrix: Soil
Data Release Authorized:
Reported: 08/12/11

QC Report No: TI03-The Boeing Company
Project: NBF-LTST/DTS
Event: 025.082.311.001
Date Sampled: NA
Date Received: NA

Date Analyzed LCS: 08/11/11 06:24
LCSD: 08/11/11 06:52
Instrument/Analyst LCS: PID2/MH
LCSD: PID2/MH

Purge Volume: 5.0 mL

Sample Amount LCS: 100 mg-dry-wt
LCSD: 100 mg-dry-wt

Analyte	LCS	Spike Added-LCS	LCS Recovery	LCSD	Spike Added-LCSD	LCSD Recovery	RPD
Gasoline Range Hydrocarbons	47.4	50.0	94.8%	46.8	50.0	93.6%	1.3%

Reported in mg/kg (ppm)

RPD calculated using sample concentrations per SW846.

TPHG Surrogate Recovery

	LCS	LCSD
Trifluorotoluene	105%	106%
Bromobenzene	104%	107%

ANALYTICAL RESOURCES INCORPORATED

ORGANICS ANALYSIS DATA SHEET
TOTAL DIESEL RANGE HYDROCARBONS
NWTPHD by GC/FID
Page 1 of 1
Matrix: Soil

QC Report No: TI03-The Boeing Company
Project: NBF-LTST/DTS
025.082.311.001
Date Received: 08/10/11

Data Release Authorized:
Reported: 08/12/11

ARI ID	Sample ID	Extraction Date	Analysis Date	EFV DL	Range	RL	Result
MB-081011	Method Blank	08/10/11	08/11/11	1.00	Diesel	5.0	< 5.0 U
11-17425	HC ID: ---		FID3B	1.0	Motor Oil	10	< 10 U
					o-Terphenyl		96.0%
TI03A	NBF-RRSS-A-081011	08/10/11	08/11/11	1.00	Diesel	5.2	< 5.2 U
11-17425	HC ID: ---		FID3B	1.0	Motor Oil	10	< 10 U
					o-Terphenyl		95.5%

Reported in mg/kg (ppm)

EFV-Effective Final Volume in mL.
DL-Dilution of extract prior to analysis.
RL-Reporting limit.

Diesel quantitation on total peaks in the range from C12 to C24.
Motor Oil quantitation on total peaks in the range from C24 to C38.
HC ID: DRO/RRO indicates results of organics or additional hydrocarbons in ranges are not identifiable.

ANALYTICAL RESOURCES INCORPORATED

TPHD SURROGATE RECOVERY SUMMARY

Matrix: Soil

QC Report No: TI03-The Boeing Company
Project: NBF-LTST/DTS
025.082.311.001

Client ID	OTER	TOT OUT
081011MBS	96.0%	0
081011LCS	83.8%	0
081011LCSD	85.0%	0
NBF-RRSS-A-081011	95.5%	0

	LCS/MB LIMITS	QC LIMITS
(OTER) = o-Terphenyl	(50-150)	(50-150)

Prep Method: SW3546
Log Number Range: 11-17425 to 11-17425

FORM-II TPHD

ANALYTICAL RESOURCES INCORPORATED

ORGANICS ANALYSIS DATA SHEET
NWTPHD by GC/FID

Sample ID: LCS-081011
LCS/LCSD

Lab Sample ID: LCS-081011
LIMS ID: 11-17425
Matrix: Soil
Data Release Authorized:
Reported: 08/12/11

QC Report No: TI03-The Boeing Company
Project: NBF-LTST/DTS
025.082.311.001
Date Sampled: NA
Date Received: NA

Date Extracted LCS/LCSD: 08/10/11

Date Analyzed LCS: 08/11/11 14:12
LCSD: 08/11/11 14:35
Instrument/Analyst LCS: FID3B/MS
LCSD: FID3B/MS

Sample Amount LCS: 10.0 g-dry-wt
LCSD: 10.0 g-dry-wt
Final Extract Volume LCS: 1.0 mL
LCSD: 1.0 mL
Dilution Factor LCS: 1.00
LCSD: 1.00

Range	LCS	Spike Added-LCS	LCS Recovery	LCSD	Spike Added-LCSD	LCSD Recovery	RPD
Diesel	135	150	90.0%	141	150	94.0%	4.3%

TPHD Surrogate Recovery

	LCS	LCSD
o-Terphenyl	83.8%	85.0%

Results reported in mg/kg
RPD calculated using sample concentrations per SW846.

ANALYTICAL RESOURCES INCORPORATED

TOTAL DIESEL RANGE HYDROCARBONS-EXTRACTION REPORT

ARI Job: TI03
Project: NBF-LTST/DTS
025.082.311.001

Matrix: Soil
Date Received: 08/10/11

ARI ID	Client ID	Client Amt	Final Vol	Basis	Prep Date
11-17425-081011MB1	Method Blank	10.0 g	1.00 mL	-	08/10/11
11-17425-081011LCS1	Lab Control	10.0 g	1.00 mL	-	08/10/11
11-17425-081011LCSD1	Lab Control Dup	10.0 g	1.00 mL	-	08/10/11
11-17425-TI03A	NBF-RRSS-A-081011	9.59 g	1.00 mL	D	08/10/11

Basis: D=Dry Weight W=As Received

ANALYTICAL RESOURCES INCORPORATED

INORGANICS ANALYSIS DATA SHEET
TOTAL METALS

Sample ID: NBF-RRSS-A-081011
SAMPLE

Lab Sample ID: TI03A
LIMS ID: 11-17425
Matrix: Soil
Data Release Authorized:
Reported: 08/12/11

QC Report No: TI03-The Boeing Company
Project: NBF-LTST/DTS
025.082.311.001
Date Sampled: 08/09/11
Date Received: 08/10/11

Percent Total Solids: 94.4%

Prep Meth	Prep Date	Analysis Method	Analysis Date	CAS Number	Analyte	RL	mg/kg-dry	Q
3050B	08/11/11	6010B	08/12/11	7440-38-2	Arsenic	5	5	U
3050B	08/11/11	6010B	08/12/11	7440-43-9	Cadmium	0.2	0.2	U
3050B	08/11/11	6010B	08/12/11	**7440-47-3**	**Chromium**	0.5	**12.6**	
3050B	08/11/11	6010B	08/12/11	**7439-92-1**	**Lead**	2	**9**	
CLP	08/11/11	7471A	08/11/11	7439-97-6	Mercury	0.02	0.02	U

U-Analyte undetected at given RL
RL-Reporting Limit

ANALYTICAL RESOURCES INCORPORATED

INORGANICS ANALYSIS DATA SHEET
TOTAL METALS

Sample ID: LAB CONTROL

Lab Sample ID: TI03LCS
LIMS ID: 11-17425
Matrix: Soil
Data Release Authorized:
Reported: 08/12/11

QC Report No: TI03-The Boeing Company
Project: NBF-LTST/DTS
025.082.311.001
Date Sampled: NA
Date Received: NA

BLANK SPIKE QUALITY CONTROL REPORT

Analyte	Analysis Method	Spike Found	Spike Added	% Recovery	Q
Arsenic	6010B	207	200	104%	
Cadmium	6010B	52.6	50.0	105%	
Chromium	6010B	53.4	50.0	107%	
Lead	6010B	203	200	102%	
Mercury	7471A	0.52	0.50	104%	

Reported in mg/kg-dry

N-Control limit not met
NA-Not Applicable, Analyte Not Spiked
Control Limits: 80-120%

ANALYTICAL RESOURCES INCORPORATED

INORGANICS ANALYSIS DATA SHEET
TOTAL METALS

Sample ID: METHOD BLANK

Lab Sample ID: TI03MB
LIMS ID: 11-17425
Matrix: Soil
Data Release Authorized:
Reported: 08/12/11

Percent Total Solids: NA

QC Report No: TI03-The Boeing Company
Project: NBF-LTST/DTS
025.082.311.001
Date Sampled: NA
Date Received: NA

Prep Meth	Prep Date	Analysis Method	Analysis Date	CAS Number	Analyte	RL	mg/kg-dry	Q
3050B	08/11/11	6010B	08/12/11	7440-38-2	Arsenic	5	5	U
3050B	08/11/11	6010B	08/12/11	7440-43-9	Cadmium	0.2	0.2	U
3050B	08/11/11	6010B	08/12/11	7440-47-3	Chromium	0.5	0.5	U
3050B	08/11/11	6010B	08/12/11	7439-92-1	Lead	2	2	U
CLP	08/11/11	7471A	08/11/11	7439-97-6	Mercury	0.02	0.02	U

U-Analyte undetected at given RL
RL-Reporting Limit

Analytical Resources, Incorporated
Analytical Chemists and Consultants

August 22, 2011

Jeremy Davis
Landau Associates, Inc.
130 Second Ave
Edmonds, WA 98020

RE: Project: NBF – LTST 025.082.311.001
ARI Job: TJ28

Dear Jeremy:

Please find enclosed the Chain of Custody (COC) record, sample receipt documentation, and analytical results for the above referenced project. Analytical Resources, Inc. (ARI) accepted two water samples in good condition on August 19, 2011. One cooler was received with a temperature of 18.8°C.

The samples were analyzed for PCBs, as requested on the COC.

There were no irregularities with the samples.

Quality control analysis results are included for your review. Copies of the reports and all associated raw data will be kept on file electronically at ARI. If you have any questions or require additional information, please contact me at your convenience.

Sincerely,
ANALYTICAL RESOURCES, INC

Kelly Bottem
Client Services Manager
(206) 695-6211
kellyb@arilabs.com
www.arilabs.com

cc: Carl Bach, The Boeing Company, P.O. Box 3707, M/S 1W-12, Seattle, WA 98124-2207

4611 South 134th Place, Suite 100 • Tukwila WA 98168 • **206-695-6200** • **206-695-6201** fax

LANDAU ASSOCIATES

☒ Seattle/Edmonds (425) 778-0907
☐ Tacoma (253) 926-2493
☐ Spokane (509) 327-9737
☐ Portland (503) 542-1080
☐ _____

TJ28

Date 8/19/11
Page 1 of 1

Chain-of-Custody Record

Project Name NBF-DTS
Project No. 025.082.311.001
Project Location/Event NBF-DTS
Sampler's Name JEREMY DAVIS
Project Contact JMD, Carl B, Joe K
Send Results To JMD, Carl B, Joe K

Testing Parameters

Turnaround Time
☐ Standard
☒ ~~Accelerated~~
~~72 Hr~~

Sample I.D.	Date	Time	Matrix	No. of Containers	PCBs (8082)
NBF-DTS-A-081911	8/19/11	1445	W	2 Amb	Y
NBF-DTS-B-081911	↓	1440	W	"	Y

Observations/Comments

Not Nec.
~~X Allow water samples to settle, collect aliquot from clear portion~~ JMD
~~X NWTPH-Dx - run acid wash/silica gel cleanup~~ JMD
NA

___ run samples standardized to _____ product
___ Analyze for EPH if no specific product identified
VOC/BTEX/VPH (soil):
___ non-preserved
___ preserved w/methanol
___ preserved w/sodium bisulfate
___ Freeze upon receipt
___ Dissolved metal water samples field filtered
Other _____

Special Shipment/Handling or Storage Requirements: Cooler w/ wet Ice

Method of Shipment: Drop-off @ ARI

Relinquished by	Received by	Relinquished by	Received by
Signature: JEREMY DAVIS	Signature: [signature]	Signature:	Signature:
Printed Name: LAI	Printed Name: C. OREIRO	Printed Name:	Printed Name:
Company:	Company: ARI	Company:	Company:
Date: 8/19/11 Time: 1512	Date: 8/19/11 Time: 1512	Date: Time:	Date: Time:

WHITE COPY - Project File YELLOW COPY - Laboratory PINK COPY - Client Representative

Rev 8/09

Analytical Resources, Incorporated
Analytical Chemists and Consultants

Cooler Receipt Form

ARI Client: Boeing
COC No(s): _____ NA
Assigned ARI Job No: TJ28

Project Name: NBF - DTS
Delivered by: Fed-Ex UPS Courier Hand Delivered Other: _____
Tracking No: _____ NA

Preliminary Examination Phase:

Were intact, properly signed and dated custody seals attached to the outside of to cooler?	YES	NO
Were custody papers included with the cooler?	YES	NO
Were custody papers properly filled out (ink, signed, etc.)	YES	NO

Temperature of Cooler(s) (°C) (recommended 2.0-6.0 °C for chemistry)..... 18.8 ____ ____ ____ ____ ____

If cooler temperature is out of compliance fill out form 00070F Temp Gun ID#: 90941619

Cooler Accepted by: AV Date: 8/19/11 Time: 1512

Complete custody forms and attach all shipping documents

Log-In Phase:

Was a temperature blank included in the cooler?		YES	NO
What kind of packing material was used? ... Bubble Wrap Wet Ice Gel Packs Baggies Foam Block Paper Other: _____			
Was sufficient ice used (if appropriate)?	NA	YES	NO
Were all bottles sealed in individual plastic bags?		YES	NO
Did all bottles arrive in good condition (unbroken)?		YES	NO
Were all bottle labels complete and legible?		YES	NO
Did the number of containers listed on COC match with the number of containers received?		YES	NO
Did all bottle labels and tags agree with custody papers?		YES	NO
Were all bottles used correct for the requested analyses?		YES	NO
Do any of the analyses (bottles) require preservation? (attach preservation sheet, excluding VOCs)...	NA	YES	NO
Were all VOC vials free of air bubbles?	NA	YES	NO
Was sufficient amount of sample sent in each bottle?		YES	NO
Date VOC Trip Blank was made at ARI...	NA	_____	

Was Sample Split by ARI : NA YES Date/Time: _____ Equipment: _____ Split by: _____

Samples Logged by: AV Date: 8/19/11 Time: 1520

***** Notify Project Manager of discrepancies or concerns *****

Sample ID on Bottle	Sample ID on COC	Sample ID on Bottle	Sample ID on COC

Additional Notes, Discrepancies, & Resolutions:

By: Date:

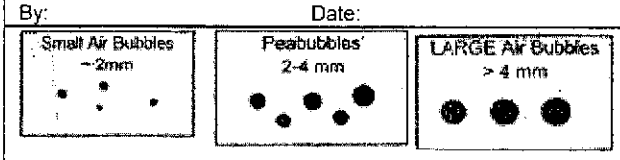

Small → "sm"
Peabubbles → "pb"
Large → "lg"
Headspace → "hs"

Analytical Resources, Incorporated
Analytical Chemists and Consultants

Cooler Temperature Compliance Form

1.3.8

Cooler#:	Temperature(°C): 18.8	
Sample ID	**Bottle Count**	**Bottle Type**
NBI-DIS-A-081911	2	500ml Ag
NBI-DIS-B-081911	2	↓

Cooler#:	Temperature(°C):	
Sample ID	**Bottle Count**	**Bottle Type**

Cooler#:	Temperature(°C):	
Sample ID	**Bottle Count**	**Bottle Type**

Cooler#:	Temperature(°C):	
Sample ID	**Bottle Count**	**Bottle Type**

Completed by: AV Date: 8/19/11 Time: 1521

Sample ID Cross Reference Report

ANALYTICAL RESOURCES INCORPORATED

ARI Job No: TJ28
Client: The Boeing Company
Project Event: 025.082.311.001
Project Name: NBF-DTS

	Sample ID	ARI Lab ID	ARI LIMS ID	Matrix	Sample Date/Time	VTSR
1.	NBF-DTS-A-081911	TJ28A	11-18112	Water	08/19/11 14:45	08/19/11 15:12
2.	NBF-DTS-B-081911	TJ28B	11-18113	Water	08/19/11 14:40	08/19/11 15:12

Printed 08/19/11

ANALYTICAL RESOURCES INCORPORATED

ORGANICS ANALYSIS DATA SHEET
PCB by GC/ECD Method SW8082

Sample ID: NBF-DTS-A-081911
SAMPLE

Lab Sample ID: TJ28A
LIMS ID: 11-18112
Matrix: Water
Data Release Authorized:
Reported: 08/22/11

QC Report No: TJ28-The Boeing Company
Project: NBF-DTS
025.082.311.001
Date Sampled: 08/19/11
Date Received: 08/19/11

Date Extracted: 08/19/11
Date Analyzed: 08/20/11 14:47
Instrument/Analyst: ECD5/JLW
GPC Cleanup: No
Sulfur Cleanup: Yes

Sample Amount: 500 mL
Final Extract Volume: 1.0 mL
Dilution Factor: 1.00
Silica Gel: No
Acid Cleanup: Yes

CAS Number	Analyte	RL	Result
12674-11-2	Aroclor 1016	0.10	< 0.10 U
53469-21-9	Aroclor 1242	0.10	< 0.10 U
12672-29-6	Aroclor 1248	0.10	< 0.10 U
11097-69-1	Aroclor 1254	0.10	< 0.10 U
11096-82-5	Aroclor 1260	0.10	< 0.10 U
11104-28-2	Aroclor 1221	0.10	< 0.10 U
11141-16-5	Aroclor 1232	0.10	< 0.10 U
37324-23-5	Aroclor 1262	0.10	< 0.10 U

Reported in µg/L (ppb)

PCB Surrogate Recovery

Decachlorobiphenyl	74.5%
Tetrachlorometaxylene	68.8%

ANALYTICAL RESOURCES INCORPORATED

ORGANICS ANALYSIS DATA SHEET
PCB by GC/ECD Method SW8082

Sample ID: NBF-DTS-B-081911
SAMPLE

Lab Sample ID: TJ28B
LIMS ID: 11-18113
Matrix: Water
Data Release Authorized:
Reported: 08/22/11

QC Report No: TJ28-The Boeing Company
Project: NBF-DTS
025.082.311.001
Date Sampled: 08/19/11
Date Received: 08/19/11

Date Extracted: 08/19/11
Date Analyzed: 08/20/11 15:05
Instrument/Analyst: ECD5/JLW
GPC Cleanup: No
Sulfur Cleanup: Yes

Sample Amount: 500 mL
Final Extract Volume: 1.0 mL
Dilution Factor: 1.00
Silica Gel: No
Acid Cleanup: Yes

CAS Number	Analyte	RL	Result
12674-11-2	Aroclor 1016	0.10	< 0.10 U
53469-21-9	Aroclor 1242	0.10	< 0.10 U
12672-29-6	Aroclor 1248	0.10	< 0.10 U
11097-69-1	Aroclor 1254	0.10	< 0.10 U
11096-82-5	Aroclor 1260	0.10	< 0.10 U
11104-28-2	Aroclor 1221	0.10	< 0.10 U
11141-16-5	Aroclor 1232	0.10	< 0.10 U
37324-23-5	Aroclor 1262	0.10	< 0.10 U

Reported in µg/L (ppb)

PCB Surrogate Recovery

Decachlorobiphenyl	78.5%
Tetrachlorometaxylene	79.5%

ANALYTICAL RESOURCES INCORPORATED

ORGANICS ANALYSIS DATA SHEET
PCB by GC/ECD Method SW8082

Sample ID: MB-081911
METHOD BLANK

Lab Sample ID: MB-081911
LIMS ID: 11-18112
Matrix: Water
Data Release Authorized:
Reported: 08/22/11

QC Report No: TJ28-The Boeing Company
Project: NBF-DTS
025.082.311.001
Date Sampled: NA
Date Received: NA

Date Extracted: 08/19/11
Date Analyzed: 08/20/11 13:50
Instrument/Analyst: ECD5/JLW
GPC Cleanup: No
Sulfur Cleanup: Yes

Sample Amount: 500 mL
Final Extract Volume: 1.0 mL
Dilution Factor: 1.00
Silica Gel: No
Acid Cleanup: Yes

CAS Number	Analyte	RL	Result
12674-11-2	Aroclor 1016	0.10	< 0.10 U
53469-21-9	Aroclor 1242	0.10	< 0.10 U
12672-29-6	Aroclor 1248	0.10	< 0.10 U
11097-69-1	Aroclor 1254	0.10	< 0.10 U
11096-82-5	Aroclor 1260	0.10	< 0.10 U
11104-28-2	Aroclor 1221	0.10	< 0.10 U
11141-16-5	Aroclor 1232	0.10	< 0.10 U
37324-23-5	Aroclor 1262	0.10	< 0.10 U

Reported in µg/L (ppb)

PCB Surrogate Recovery

Decachlorobiphenyl	76.8%
Tetrachlorometaxylene	72.2%

ANALYTICAL RESOURCES INCORPORATED

SW8082/PCB WATER SURROGATE RECOVERY SUMMARY

Matrix: Water

QC Report No: TJ28-The Boeing Company
Project: NBF-DTS
025.082.311.001

Client ID	DCBP % REC	DCBP LCL-UCL	TCMX % REC	TCMX LCL-UCL	TOT OUT
MB-081911	76.8%	39-116	72.2%	29-100	0
LCS-081911	85.5%	39-116	81.0%	29-100	0
LCSD-081911	82.2%	39-116	75.0%	29-100	0
NBF-DTS-A-081911	74.5%	10-128	68.8%	25-100	0
NBF-DTS-B-081911	78.5%	10-128	79.5%	25-100	0

Prep Method: SW3510C
Log Number Range: 11-18112 to 11-18113

FORM-II SW8082

ANALYTICAL RESOURCES INCORPORATED

ORGANICS ANALYSIS DATA SHEET
PCB by GC/ECD Method SW8082

Sample ID: LCS-081911
LCS/LCSD

Lab Sample ID: LCS-081911
LIMS ID: 11-18112
Matrix: Water
Data Release Authorized:
Reported: 08/22/11

QC Report No: TJ28-The Boeing Company
Project: NBF-DTS
025.082.311.001
Date Sampled: NA
Date Received: NA

Date Extracted LCS/LCSD: 08/19/11

Date Analyzed LCS: 08/20/11 14:09
LCSD: 08/20/11 14:28
Instrument/Analyst LCS: ECD5/JLW
LCSD: ECD5/JLW
GPC Cleanup: No
Sulfur Cleanup: Yes

Sample Amount LCS: 500 mL
LCSD: 500 mL
Final Extract Volume LCS: 1.0 mL
LCSD: 1.0 mL
Dilution Factor LCS: 1.00
LCSD: 1.00
Silica Gel: No
Acid Cleanup: Yes

Analyte	LCS	Spike Added-LCS	LCS Recovery	LCSD	Spike Added-LCSD	LCSD Recovery	RPD
Aroclor 1016	0.896	1.00	89.6%	0.870	1.00	87.0%	2.9%
Aroclor 1260	0.884	1.00	88.4%	0.866	1.00	86.6%	2.1%

PCB Surrogate Recovery

	LCS	LCSD
Decachlorobiphenyl	85.5%	82.2%
Tetrachlorometaxylene	81.0%	75.0%

Results reported in µg/L
RPD calculated using sample concentrations per SW846.

Analytical Resources, Incorporated
Analytical Chemists and Consultants

September 1, 2011

Jeremy Davis
Landau Associates, Inc.
130 Second Ave
Edmonds, WA 98020

RE: Project: NBF – LTST 025.082.311.001
ARI Job: TK17

Dear Jeremy:

Please find enclosed the Chain of Custody (COC) record, sample receipt documentation, and analytical results for the above referenced project. Analytical Resources, Inc. (ARI) accepted two water samples in good condition on August 26, 2011. One cooler was received with a temperature of 18.1°C.
Six bottles were received for Oil and Grease analysis and three bottles each sample were composited per Landau Associates.

The samples were analyzed for PCBs and Oil and Grease, as requested on the COC.

There were no irregularities with the samples.

Quality control analysis results are included for your review. Copies of the reports and all associated raw data will be kept on file electronically at ARI. If you have any questions or require additional information, please contact me at your convenience.

Sincerely,
ANALYTICAL RESOURCES, INC

Kelly Bottem
Client Services Manager
(206) 695-6211
kellyb@arilabs.com
www.arilabs.com

cc: Carl Bach, The Boeing Company, P.O. Box 3707, M/S 1W-12, Seattle, WA 98124-2207

4611 South 134th Place, Suite 100 • Tukwila WA 98168 • **206-695-6200** • **206-695-6201** fax

LANDAU ASSOCIATES

☒ Seattle/Edmonds (425) 778-0907
☐ Tacoma (253) 926-2493
☐ Spokane (509) 327-9737
☐ Portland (503) 542-1080
☐

Chain-of-Custody Record

TK17

Date 8/27/11
Page 1 of 1

Project Name NBF
Project No. 025.082311.001
Project Location/Event NBF - DTS
Sampler's Name Jeremy Davis
Project Contact Jeremy D, Carl B, Joe K
Send Results To Jeremy D, Carl B, Joe K

Testing Parameters

Turnaround Time
☐ Standard
☒ Accelerated
~~72 Hr~~

Sample I.D.	Date	Time	Matrix	No. of Containers	FOG	PCBs (MTCA)
NBF-DTS-A-082711	8/27/11	1445	W	5	X	X
NBF-DTS-B-082711	8/27/11	~~1450~~ 1500	W	5	X	X

Observations/Comments

~~X Allow water samples to settle, collect aliquot from clear portion~~ Not Nec. — JMD
~~X NWTPH-Dx - run acid wash/silica gel cleanup~~ NA JMD

___ run samples standardized to _____ product

___ Analyze for EPH if no specific product identified

VOC/BTEX/VPH (soil):
___ non-preserved
___ preserved w/methanol
___ preserved w/sodium bisulfate
___ Freeze upon receipt

___ Dissolved metal water samples field filtered

Other
FOG TIME: 1445, 1450, 1455
FOG TIME: 1500, 1505, 1510
- 0.1 µg/L RL

Special Shipment/Handling or Storage Requirements Cooler with Wet Ice

Method of Shipment Drop off @ NBF

Relinquished by	Received by	Relinquished by	Received by
Signature	Signature	Signature	Signature
Printed Name Jeremy Davis	Printed Name Taylor Streeter	Printed Name	Printed Name
Company CAI	Company ARI	Company	Company
Date 8/27/11 Time 1550	Date 8-26-11 Time 1550	Date Time	Date Time

WHITE COPY - Project File YELLOW COPY - Laboratory PINK COPY - Client Representative

Rev 8/09

Sample ID Cross Reference Report

ANALYTICAL RESOURCES INCORPORATED

ARI Job No: TK17
Client: The Boeing Company
Project Event: 025.082.311.001
Project Name: NBF

	Sample ID	ARI Lab ID	ARI LIMS ID	Matrix	Sample Date/Time	VTSR
1.	NBF-DTS-A-082711	TK17A	11-18724	Water	08/26/11 14:45	08/26/11 15:50
2.	NBF-DTS-B-082711	TK17B	11-18725	Water	08/26/11 15:00	08/26/11 15:50

Printed 08/26/11

PRESERVATION VERIFICATION 08/26/11

ANALYTICAL RESOURCES INCORPORATED

ARI Job No: **TK17**

Inquiry Number: NONE
Analysis Requested: 08/27/11
Contact: Bach,Carl
Client: The Boeing Company
Logged by: TS
Sample Set Used: Yes-481
Validatable Package: No
Deliverables:

PC: Kelly
VTSR: 08/26/11

Project #: 025.082.311.001
Project: NBF
Sample Site:
SDG No:
Analytical Protocol: In-house

LOGNUM ARI ID	CLIENT ID	CN >12	WAD >12	NH3 <2	COD <2	FOG <2	MET <2	PHEN <2	PHOS <2	TKN <2	NO23 <2	TOC <2	S2 >9	AK102 <2	Fe2+ <2	DMET FLT	DOC FLT	PARAMETER	ADJUSTED TO	LOT NUMBER	AMOUNT ADDED	DATE/BY
11-18724 **TK17A**	NBF-DTS-A-082711					pH<2																
11-18725 **TK17B**	NBF-DTS-B-082711					pH<2																

Checked By TS Date 8-26-11

Analytical Resources, Incorporated
Analytical Chemists and Consultants

Cooler Receipt Form

ARI Client: Boeing

Project Name: NBF

COC No(s): _____ NA

Delivered by: Fed-Ex UPS Courier Hand Delivered Other: _____

Assigned ARI Job No: TK17

Tracking No: _____ NA

Preliminary Examination Phase:

Were intact, properly signed and dated custody seals attached to the outside of to cooler?	YES	NO
Were custody papers included with the cooler?	YES	NO
Were custody papers properly filled out (ink, signed, etc.)	YES	NO

Temperature of Cooler(s) (°C) (recommended 2.0-6.0 °C for chemistry): 18.1

If cooler temperature is out of compliance fill out form 00070F

Temp Gun ID#: 90946619

Cooler Accepted by: TC Date: 8-26-11 Time: 1550

Complete custody forms and attach all shipping documents

Log-In Phase:

Was a temperature blank included in the cooler?		YES	NO
What kind of packing material was used? ... Bubble Wrap Wet Ice Gel Packs Baggies Foam Block Paper Other: _____			
Was sufficient ice used (if appropriate)?	NA	YES	NO
Were all bottles sealed in individual plastic bags?		YES	NO
Did all bottles arrive in good condition (unbroken)?		YES	NO
Were all bottle labels complete and legible?		YES	NO
Did the number of containers listed on COC match with the number of containers received?		YES	NO
Did all bottle labels and tags agree with custody papers?		YES	NO
Were all bottles used correct for the requested analyses?		YES	NO
Do any of the analyses (bottles) require preservation? (attach preservation sheet, excluding VOCs)...	NA	YES	NO
Were all VOC vials free of air bubbles?	NA	YES	NO
Was sufficient amount of sample sent in each bottle?		YES	NO
Date VOC Trip Blank was made at ARI	NA	_____	

Was Sample Split by ARI : NA YES Date/Time: _____ Equipment: _____ Split by: _____

Samples Logged by: TS Date: 8-26-11 Time: 1605

***** Notify Project Manager of discrepancies or concerns *****

Sample ID on Bottle	Sample ID on COC	Sample ID on Bottle	Sample ID on COC

Additional Notes, Discrepancies, & Resolutions:

Samples say sampled on 8-27-11 on both bottles and COC. Should say 8-26-11

By: TS Date: 8-26-11

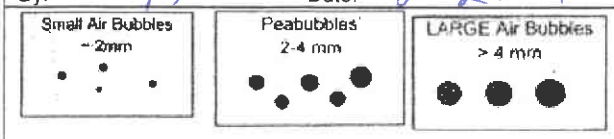

Small → "sm"
Peabubbles → "pb"
Large → "lg"
Headspace → "hs"

Analytical Resources, Incorporated
Analytical Chemists and Consultants

Cooler Temperature Compliance Form

Cooler#: 1 Temperature(°C): 18.1

Sample ID	Bottle Count	Bottle Type
All samples out of temp compliance		

Cooler#: Temperature(°C):

Sample ID	Bottle Count	Bottle Type

Cooler#: Temperature(°C):

Sample ID	Bottle Count	Bottle Type

Cooler#: Temperature(°C):

Sample ID	Bottle Count	Bottle Type

Completed by: TS Date: 8-26-11 Time: 1550

ANALYTICAL RESOURCES INCORPORATED

ORGANICS ANALYSIS DATA SHEET
PCB by GC/ECD Method SW8082

Sample ID: NBF-DTS-A-082611
SAMPLE

Lab Sample ID: TK17A
LIMS ID: 11-18724
Matrix: Water
Data Release Authorized: MW
Reported: 08/30/11

QC Report No: TK17-The Boeing Company
Project: NBF
025.082.311.001
Date Sampled: 08/26/11
Date Received: 08/26/11

Date Extracted: 08/27/11
Date Analyzed: 08/29/11 14:40
Instrument/Analyst: ECD5/AAR
GPC Cleanup: No
Sulfur Cleanup: Yes

Sample Amount: 500 mL
Final Extract Volume: 1.0 mL
Dilution Factor: 1.00
Silica Gel: No
Acid Cleanup: Yes

CAS Number	Analyte	RL	Result
12674-11-2	Aroclor 1016	0.10	< 0.10 U
53469-21-9	Aroclor 1242	0.10	< 0.10 U
12672-29-6	Aroclor 1248	0.10	< 0.10 U
11097-69-1	Aroclor 1254	0.10	< 0.10 U
11096-82-5	Aroclor 1260	0.10	< 0.10 U
11104-28-2	Aroclor 1221	0.10	< 0.10 U
11141-16-5	Aroclor 1232	0.10	< 0.10 U
37324-23-5	Aroclor 1262	0.10	< 0.10 U

Reported in µg/L (ppb)

PCB Surrogate Recovery	
Decachlorobiphenyl	73.5%
Tetrachlorometaxylene	55.2%

ANALYTICAL RESOURCES INCORPORATED

ORGANICS ANALYSIS DATA SHEET
PCB by GC/ECD Method SW8082

Sample ID: NBF-DTS-B-082611
SAMPLE

Lab Sample ID: TK17B
LIMS ID: 11-18725
Matrix: Water
Data Release Authorized: MW
Reported: 08/30/11

QC Report No: TK17-The Boeing Company
Project: NBF
025.082.311.001
Date Sampled: 08/26/11
Date Received: 08/26/11

Date Extracted: 08/27/11
Date Analyzed: 08/29/11 14:59
Instrument/Analyst: ECD5/AAR
GPC Cleanup: No
Sulfur Cleanup: Yes

Sample Amount: 500 mL
Final Extract Volume: 1.0 mL
Dilution Factor: 1.00
Silica Gel: No
Acid Cleanup: Yes

CAS Number	Analyte	RL	Result
12674-11-2	Aroclor 1016	0.10	< 0.10 U
53469-21-9	Aroclor 1242	0.10	< 0.10 U
12672-29-6	Aroclor 1248	0.10	< 0.10 U
11097-69-1	Aroclor 1254	0.10	< 0.10 U
11096-82-5	Aroclor 1260	0.10	< 0.10 U
11104-28-2	Aroclor 1221	0.10	< 0.10 U
11141-16-5	Aroclor 1232	0.10	< 0.10 U
37324-23-5	Aroclor 1262	0.10	< 0.10 U

Reported in µg/L (ppb)

PCB Surrogate Recovery

Decachlorobiphenyl	73.8%
Tetrachlorometaxylene	51.8%

ANALYTICAL RESOURCES INCORPORATED

ORGANICS ANALYSIS DATA SHEET
PCB by GC/ECD Method SW8082

Sample ID: MB-082711
METHOD BLANK

Lab Sample ID: MB-082711
LIMS ID: 11-18724
Matrix: Water
Data Release Authorized: MW
Reported: 08/30/11

QC Report No: TK17-The Boeing Company
Project: NBF
025.082.311.001
Date Sampled: NA
Date Received: NA

Date Extracted: 08/27/11
Date Analyzed: 08/29/11 13:43
Instrument/Analyst: ECD5/AAR
GPC Cleanup: No
Sulfur Cleanup: Yes

Sample Amount: 500 mL
Final Extract Volume: 1.0 mL
Dilution Factor: 1.00
Silica Gel: No
Acid Cleanup: Yes

CAS Number	Analyte	RL	Result
12674-11-2	Aroclor 1016	0.10	< 0.10 U
53469-21-9	Aroclor 1242	0.10	< 0.10 U
12672-29-6	Aroclor 1248	0.10	< 0.10 U
11097-69-1	Aroclor 1254	0.10	< 0.10 U
11096-82-5	Aroclor 1260	0.10	< 0.10 U
11104-28-2	Aroclor 1221	0.10	< 0.10 U
11141-16-5	Aroclor 1232	0.10	< 0.10 U
37324-23-5	Aroclor 1262	0.10	< 0.10 U

Reported in µg/L (ppb)

PCB Surrogate Recovery

Decachlorobiphenyl	72.0%
Tetrachlorometaxylene	41.0%

ANALYTICAL RESOURCES INCORPORATED

SW8082/PCB WATER SURROGATE RECOVERY SUMMARY

Matrix: Water

QC Report No: TK17-The Boeing Company
Project: NBF
025.082.311.001

Client ID	DCBP % REC	DCBP LCL-UCL	TCMX % REC	TCMX LCL-UCL	TOT OUT
MB-082711	72.0%	39-116	41.0%	29-100	0
LCS-082711	74.0%	39-116	45.5%	29-100	0
LCSD-082711	76.2%	39-116	50.2%	29-100	0
NBF-DTS-A-082611	73.5%	10-128	55.2%	25-100	0
NBF-DTS-B-082611	73.8%	10-128	51.8%	25-100	0

Prep Method: SW3510C
Log Number Range: 11-18724 to 11-18725

FORM-II SW8082

ANALYTICAL RESOURCES INCORPORATED

ORGANICS ANALYSIS DATA SHEET
PCB by GC/ECD Method SW8082

Sample ID: LCS-082711
LCS/LCSD

Lab Sample ID: LCS-082711
LIMS ID: 11-18724
Matrix: Water
Data Release Authorized: MW
Reported: 08/30/11

QC Report No: TK17-The Boeing Company
Project: NBF
025.082.311.001
Date Sampled: NA
Date Received: NA

Date Extracted LCS/LCSD: 08/27/11

Date Analyzed LCS: 08/29/11 14:02
LCSD: 08/29/11 14:21
Instrument/Analyst LCS: ECD5/AAR
LCSD: ECD5/AAR
GPC Cleanup: No
Sulfur Cleanup: Yes

Sample Amount LCS: 500 mL
LCSD: 500 mL
Final Extract Volume LCS: 1.0 mL
LCSD: 1.0 mL
Dilution Factor LCS: 1.00
LCSD: 1.00
Silica Gel: No
Acid Cleanup: Yes

Analyte	LCS	Spike Added-LCS	LCS Recovery	LCSD	Spike Added-LCSD	LCSD Recovery	RPD
Aroclor 1016	0.647	1.00	64.7%	0.706	1.00	70.6%	8.7%
Aroclor 1260	0.781	1.00	78.1%	0.787	1.00	78.7%	0.8%

PCB Surrogate Recovery

	LCS	LCSD
Decachlorobiphenyl	74.0%	76.2%
Tetrachlorometaxylene	45.5%	50.2%

Results reported in µg/L
RPD calculated using sample concentrations per SW846.

INORGANICS ANALYSIS DATA SHEET
HEM Oil & Grease by Method EPA 1664A

ANALYTICAL RESOURCES INCORPORATED

Data Release Authorized:
Reported: 08/29/11
Date Received: 08/26/11

QC Report No: TK17-The Boeing Company
Project: NBF
025.082.311.001

Client/ ARI ID	Date Sampled	Matrix	Analysis Date & Batch	RL	Result
NBF-DTS-A-082611 TK17A 11-18724	08/26/11	Water	08/29/11 09:25 082911#1	3.3	< 3.3 U
NBF-DTS-B-082611 TK17B 11-18725	08/26/11	Water	08/29/11 09:25 082911#1	3.5	< 3.5 U

Reported in mg/L

RL-Analytical reporting limit
U-Undetected at reported detection limit

METHOD BLANK RESULTS-CONVENTIONALS
TK17-The Boeing Company

ANALYTICAL RESOURCES INCORPORATED

Matrix: Water
Data Release Authorized:
Reported: 08/29/11

Project: NBF
Event: 025.082.311.001
Date Sampled: NA
Date Received: NA

Analyte	Date/Time	Units	Blank
HEM Oil & Grease	08/29/11 09:25	mg/L	< 5.0 U

LAB CONTROL RESULTS-CONVENTIONALS
TK17-The Boeing Company

ANALYTICAL RESOURCES INCORPORATED

Matrix: Water
Data Release Authorized:
Reported: 08/29/11

Project: NBF
Event: 025.082.311.001
Date Sampled: NA
Date Received: NA

Analyte	Date/Time	Units	LCS	Spike Added	Recovery
HEM Oil & Grease	08/29/11 09:25	mg/L	35.5	40.1	88.5%

Analytical Resources, Incorporated
Analytical Chemists and Consultants

September 2, 2011

Jeremy Davis
Landau Associates, Inc.
130 Second Ave
Edmonds, WA 98020

RE: Project: NBF – DTS 025.082.311.001
ARI Job: TK53

Dear Jeremy:

Please find enclosed the Chain of Custody (COC) record, sample receipt documentation, and analytical results for the above referenced project. Analytical Resources, Inc. (ARI) accepted two water samples in good condition on August 31, 2011. One cooler was received with a temperature of 3.9°C.

The samples were analyzed for PCBs, as requested on the COC.

There were no irregularities with the samples.

Quality control analysis results are included for your review. Copies of the reports and all associated raw data will be kept on file electronically at ARI. If you have any questions or require additional information, please contact me at your convenience.

Sincerely,
ANALYTICAL RESOURCES, INC

Eric Branson
Project Manager
-for-
Kelly Bottem
Client Services Manager
(206) 695-6211
kellyb@arilabs.com
www.arilabs.com

cc: Carl Bach, The Boeing Company, P.O. Box 3707, M/S 1W-12, Seattle, WA 98124-2207

4611 South 134th Place, Suite 100 • Tukwila WA 98168 • **206-695-6200** • **206-695-6201** fax

Sample ID Cross Reference Report

ANALYTICAL RESOURCES INCORPORATED

ARI Job No: TK53
Client: The Boeing Company
Project Event: 225.082.311.001
Project Name: NBF-DTS

	Sample ID	ARI Lab ID	ARI LIMS ID	Matrix	Sample Date/Time	VTSR
1.	NBF-DTS-A-083011	TK53A	11-18903	Water	08/30/11 15:20	08/31/11 12:25
2.	NBF-DTS-B-083011	TK53B	11-18904	Water	08/30/11 15:23	08/31/11 12:25

Printed 08/31/11

☒ Seattle/Edmonds (425) 778-0907
☐ Tacoma (253) 926-2493
☐ Spokane (509) 327-9737
☐ Portland (503) 542-1080
☐

LANDAU ASSOCIATES

Chain-of-Custody Record

TKS3

Date 8/30/11
Page 1 of 1

Project Name NBF- DTS
Project No. 025.082.311.001
Project Location/Event NBF-DTS
Sampler's Name JEREMY DAVIS
Project Contact Jeremy D, Carl B. Joe K
Send Results To Jeremy D, Carl B., Joe K

Testing Parameters: PCBs (MTCA)

Turnaround Time
☐ Standard
☒ Accelerated
~~5~~ 72 Hr

Sample I.D.	Date	Time	Matrix	No. of Containers	PCBs (MTCA)
NBF-DTS-A-083011	8/30/11	1520	W	2	X
NBF-DTS-B-083011	"	1523	"	"	X

Observations/Comments
~~X Allow water samples to settle, collect aliquot from clear portion~~ JMD
~~X NWTPH-Dx - run acid wash/silica gel cleanup~~
JMD

___ run samples standardized to _____ product
___ Analyze for EPH if no specific product identified
VOC/BTEX/VPH (soil):
___ non-preserved
___ preserved w/methanol
___ preserved w/sodium bisulfate
___ Freeze upon receipt
___ Dissolved metal water samples field filtered
Other _____

Special Shipment/Handling or Storage Requirements In Cooler with wet ice
Method of Shipment Drop off @ ARI

Relinquished by	Received by	Relinquished by	Received by
Signature	Signature Taylor Streeter	Signature	Signature
Printed Name JEREMY DAVIS	Printed Name AKF	Printed Name	Printed Name
Company LAI	Company	Company	Company
Date 8/31/11 Time 1225	Date 8-31-11 Time 1225	Date Time	Date Time

WHITE COPY - Project File YELLOW COPY - Laboratory PINK COPY - Client Representative

Rev 8/09

Analytical Resources, Incorporated
Analytical Chemists and Consultants

Cooler Receipt Form

ARI Client: Boeing

Project Name: NBF-DTS

COC No(s): _____ NA

Delivered by: Fed-Ex UPS Courier Hand Delivered Other _____

Assigned ARI Job No: TK53

Tracking No: _____ NA

Preliminary Examination Phase:

Were intact, properly signed and dated custody seals attached to the outside of to cooler?	YES	NO
Were custody papers included with the cooler?	YES	NO
Were custody papers properly filled out (ink, signed, etc.)	YES	NO

Temperature of Cooler(s) (°C) (recommended 2.0-6.0 °C for chemistry): 3.9

If cooler temperature is out of compliance fill out form 00070F

Temp Gun ID#: 90941619

Cooler Accepted by: TR Date: 8-31-4 Time: 1220

Complete custody forms and attach all shipping documents

Log-In Phase:

Was a temperature blank included in the cooler?		YES	NO
What kind of packing material was used? Bubble Wrap Wet Ice Gel Packs Baggies Foam Block Paper Other:			
Was sufficient ice used (if appropriate)?	NA	YES	NO
Were all bottles sealed in individual plastic bags?		YES	NO
Did all bottles arrive in good condition (unbroken)?		YES	NO
Were all bottle labels complete and legible?		YES	NO
Did the number of containers listed on COC match with the number of containers received?		YES	NO
Did all bottle labels and tags agree with custody papers?		YES	NO
Were all bottles used correct for the requested analyses?		YES	NO
Do any of the analyses (bottles) require preservation? (attach preservation sheet, excluding VOCs)	NA	YES	NO
Were all VOC vials free of air bubbles?	NA	YES	NO
Was sufficient amount of sample sent in each bottle?		YES	NO
Date VOC Trip Blank was made at ARI	NA		

Was Sample Split by ARI: NA YES Date/Time: _____ Equipment: _____ Split by: _____

Samples Logged by: TR Date: 8-31-4 Time: 1230

***** Notify Project Manager of discrepancies or concerns *****

Sample ID on Bottle	Sample ID on COC	Sample ID on Bottle	Sample ID on COC

Additional Notes, Discrepancies, & Resolutions:

By Date

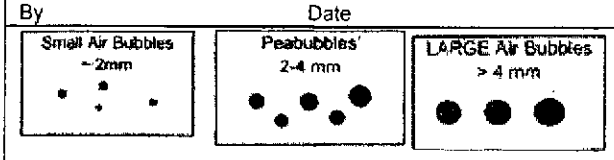

Small → "sm"
Peabubbles → "pb"
Large → "lg"
Headspace → "hs"

ANALYTICAL RESOURCES INCORPORATED

ORGANICS ANALYSIS DATA SHEET
PCB by GC/ECD Method SW8082

Sample ID: NBF-DTS-A-083011
SAMPLE

Lab Sample ID: TK53A
LIMS ID: 11-18903
Matrix: Water
Data Release Authorized:
Reported: 09/02/11

QC Report No: TK53-The Boeing Company
Project: NBF-DTS
225.082.311.001
Date Sampled: 08/30/11
Date Received: 08/31/11

Date Extracted: 08/31/11
Date Analyzed: 09/01/11 09:53
Instrument/Analyst: ECD5/JGR
GPC Cleanup: No
Sulfur Cleanup: Yes

Sample Amount: 500 mL
Final Extract Volume: 1.0 mL
Dilution Factor: 1.00
Silica Gel: No
Acid Cleanup: Yes

CAS Number	Analyte	RL	Result
12674-11-2	Aroclor 1016	0.10	< 0.10 U
53469-21-9	Aroclor 1242	0.10	< 0.10 U
12672-29-6	Aroclor 1248	0.10	< 0.10 U
11097-69-1	Aroclor 1254	0.10	< 0.10 U
11096-82-5	Aroclor 1260	0.10	< 0.10 U
11104-28-2	Aroclor 1221	0.10	< 0.10 U
11141-16-5	Aroclor 1232	0.10	< 0.10 U
37324-23-5	Aroclor 1262	0.10	< 0.10 U

Reported in µg/L (ppb)

PCB Surrogate Recovery

Decachlorobiphenyl	76.2%
Tetrachlorometaxylene	60.2%

ANALYTICAL RESOURCES INCORPORATED

ORGANICS ANALYSIS DATA SHEET
PCB by GC/ECD Method SW8082

Sample ID: NBF-DTS-B-083011
SAMPLE

Lab Sample ID: TK53B
LIMS ID: 11-18904
Matrix: Water
Data Release Authorized: MW
Reported: 09/02/11

QC Report No: TK53-The Boeing Company
Project: NBF-DTS
225.082.311.001
Date Sampled: 08/30/11
Date Received: 08/31/11

Date Extracted: 08/31/11
Date Analyzed: 09/01/11 10:12
Instrument/Analyst: ECD5/JGR
GPC Cleanup: No
Sulfur Cleanup: Yes

Sample Amount: 500 mL
Final Extract Volume: 1.0 mL
Dilution Factor: 1.00
Silica Gel: No
Acid Cleanup: Yes

CAS Number	Analyte	RL	Result
12674-11-2	Aroclor 1016	0.10	< 0.10 U
53469-21-9	Aroclor 1242	0.10	< 0.10 U
12672-29-6	Aroclor 1248	0.10	< 0.10 U
11097-69-1	Aroclor 1254	0.10	< 0.10 U
11096-82-5	Aroclor 1260	0.10	< 0.10 U
11104-28-2	Aroclor 1221	0.10	< 0.10 U
11141-16-5	Aroclor 1232	0.10	< 0.10 U
37324-23-5	Aroclor 1262	0.10	< 0.10 U

Reported in µg/L (ppb)

PCB Surrogate Recovery

Decachlorobiphenyl	72.2%
Tetrachlorometaxylene	62.0%

ANALYTICAL RESOURCES INCORPORATED

SW8082/PCB WATER SURROGATE RECOVERY SUMMARY

Matrix: Water

QC Report No: TK53-The Boeing Company
Project: NBF-DTS
225.082.311.001

Client ID	DCBP % REC	DCBP LCL-UCL	TCMX % REC	TCMX LCL-UCL	TOT OUT
MB-083111	77.0%	39-116	57.0%	29-100	0
LCS-083111	78.8%	39-116	64.5%	29-100	0
NBF-DTS-A-083011	76.2%	10-128	60.2%	25-100	0
NBF-DTS-B-083011	72.2%	10-128	62.0%	25-100	0

Prep Method: SW3510C
Log Number Range: 11-18903 to 11-18904

FORM-II SW8082

ANALYTICAL RESOURCES INCORPORATED

ORGANICS ANALYSIS DATA SHEET
PCB by GC/ECD Method SW8082

Sample ID: LCS-083111
LAB CONTROL

Lab Sample ID: LCS-083111
LIMS ID: 11-18903
Matrix: Water
Data Release Authorized:
Reported: 09/02/11

QC Report No: TK53-The Boeing Company
Project: NBF-DTS
225.082.311.001
Date Sampled: NA
Date Received: NA

Date Extracted: 08/31/11
Date Analyzed: 09/01/11 09:34
Instrument/Analyst: ECD5/JGR
GPC Cleanup: No
Sulfur Cleanup: Yes

Sample Amount: 500 mL
Final Extract Volume: 1.0 mL
Dilution Factor: 1.00
Silica Gel: No
Acid Cleanup: Yes

Analyte	Lab Control	Spike Added	Recovery
Aroclor 1016	0.840	1.00	84.0%
Aroclor 1260	0.844	1.00	84.4%

PCB Surrogate Recovery

Decachlorobiphenyl	78.8%
Tetrachlorometaxylene	64.5%

Results reported in µg/L

ANALYTICAL RESOURCES INCORPORATED

ORGANICS ANALYSIS DATA SHEET
PCB by GC/ECD Method SW8082

Sample ID: MB-083111
METHOD BLANK

Lab Sample ID: MB-083111
LIMS ID: 11-18903
Matrix: Water
Data Release Authorized:
Reported: 09/02/11

QC Report No: TK53-The Boeing Company
Project: NBF-DTS
225.082.311.001
Date Sampled: NA
Date Received: NA

Date Extracted: 08/31/11
Date Analyzed: 09/01/11 09:15
Instrument/Analyst: ECD5/JGR
GPC Cleanup: No
Sulfur Cleanup: Yes

Sample Amount: 500 mL
Final Extract Volume: 1.0 mL
Dilution Factor: 1.00
Silica Gel: No
Acid Cleanup: Yes

CAS Number	Analyte	RL	Result
12674-11-2	Aroclor 1016	0.10	< 0.10 U
53469-21-9	Aroclor 1242	0.10	< 0.10 U
12672-29-6	Aroclor 1248	0.10	< 0.10 U
11097-69-1	Aroclor 1254	0.10	< 0.10 U
11096-82-5	Aroclor 1260	0.10	< 0.10 U
11104-28-2	Aroclor 1221	0.10	< 0.10 U
11141-16-5	Aroclor 1232	0.10	< 0.10 U
37324-23-5	Aroclor 1262	0.10	< 0.10 U

Reported in µg/L (ppb)

PCB Surrogate Recovery

Decachlorobiphenyl	77.0%
Tetrachlorometaxylene	57.0%

September 2011 Monthly Data Summary

CLEAR WATER SERVICES

Remediation Solutions for the Real World™ – Stormwater, Groundwater, and Waste Water

MONTHLY DATA SUMMARY FOR CESF OPERATIONS

Job name: Boeing Pipeline Dewatering
Job number: 11BOE1
Month: September-11
Prepared for: Glacier Environmental Services, Inc.

DATE	PRECIP	VOLUME TREATED (Gallons)	VOLUME DISCHARGED (Gallons)	SAND FILTER INFLUENT pH	SAND FILTER INFLUENT TURBIDITY (NTU)	SAND FILTER EFFLUENT pH	SAND FILTER EFFLUENT TURBIDITY (NTU)
-	-	-	-	AVG	AVG	AVG	AVG
9/1/2011	0.00	205,695	100,000	6.86	81.60	6.98	0.41
9/2/2011	0.00	214,140	100,000	6.84	31.86	6.95	0.54
9/3/2011	0.00						
9/4/2011	0.00	127,215	56,447	6.92	45.71	7.00	0.47
9/5/2011	0.00	220,144	100,000	6.88	66.87	6.97	0.46
9/6/2011	0.00	218,086	100,000	6.86	82.94	6.92	0.46
9/7/2011	0.00	244,431	100,000	6.87	48.35	6.96	0.72
9/8/2011	0.00	219,984	100,000	6.84	27.19	6.89	0.54
9/9/2011	0.00	184,021	87,195	6.81	6.86	7.02	0.47
9/10/2011	0.00						
9/11/2011	0.00						
9/12/2011	0.00						
9/13/2011	0.00	62,353	27,414	7.05	39.69	6.94	0.42
9/14/2011	0.00	51,995	19,775	7.09	28.07	7.08	0.33
9/15/2011	0.00						
9/16/2011	0.00						
9/17/2011	0.21						
9/18/2011	0.15						
9/19/2011	0.07	3,327	351	7.21	47.10	7.22	1.00
9/20/2011	0.00						
9/21/2011	0.00						
9/22/2011	0.00	25,159	10,538	7.36	24.04	7.42	0.38
9/23/2011	0.00	N/A	49,964	7.24	78.36	7.36	0.64
9/24/2011	0.00	N/A	11,383	7.21	61.75	7.28	0.40
9/25/2011	0.24	N/A	93,279	7.21	102.09	7.28	0.53
9/26/2011	0.50	N/A	81,326	7.23	137.95	7.22	0.99
9/27/2011	0.04	N/A	95,626	7.19	57.18	7.18	0.75
9/28/2011	0.01	2,613	48,069	7.19	87.31	7.17	0.66
9/29/2011	0.00	23,162	10,869	7.27	64.04	7.16	1.28
9/30/2011	0.02						
Monthly	**Total**	**Total**	**Total**	**AVG**	**AVG**	**AVG**	**AVG**
	1.24	**1,596,630**	**1,192,236**	**7.06**	**58.89**	**7.11**	**0.60**

Analytical Resources, Incorporated
Analytical Chemists and Consultants

September 12, 2011

Jeremy Davis
Landau Associates, Inc.
130 Second Ave
Edmonds, WA 98020

RE: Project: NBF – DTS 025.082.311.001
ARI Job: TL44

Dear Jeremy:

Please find enclosed the Chain of Custody (COC) record, sample receipt documentation, and analytical results for the above referenced project. Analytical Resources, Inc. (ARI) accepted two water samples in good condition on September 8, 2011. Two coolers were received with temperatures of 5.4 and 5.3°C.

The samples were analyzed for PCBs, as requested on the COC.

There were no irregularities with the samples.

Quality control analysis results are included for your review. Copies of the reports and all associated raw data will be kept on file electronically at ARI. If you have any questions or require additional information, please contact me at your convenience.

Sincerely,
ANALYTICAL RESOURCES, INC

Kelly Bottem
Client Services Manager
(206) 695-6211
kellyb@arilabs.com
www.arilabs.com

cc: Carl Bach, The Boeing Company, P.O. Box 3707, M/S 1W-12, Seattle, WA 98124-2207

4611 South 134th Place, Suite 100 • Tukwila WA 98168 • **206-695-6200** • **206-695-6201** fax

☒ Seattle/Edmonds (425) 778-0907
☐ Tacoma (253) 926-2493
☐ Spokane (509) 327-9737
☐ Portland (503) 542-1080
☐

LANDAU ASSOCIATES

Chain-of-Custody Record

Date 9/8/11

Page 1 of 1

Project Name NBF-DTS Project No. 025.682.311.001

Project Location/Event NBF-DTS

Sampler's Name Jeremy Davis

Project Contact Jeremy D, Carl B, Joe K

Send Results To Jeremy D, Carl B, Joe K

Testing Parameters

Turnaround Time
☐ Standard
☒ ~~Accelerated~~
☒ 72 hr

Sample I.D.	Date	Time	Matrix	No. of Containers	PCBs (MTCA)
NBF-DTS-A-090811	9/8/11	1305	W	2	X
NBF-DTS-B-090811	"	1300	"	"	X

Observations/Comments

~~X Allow water samples to settle, collect aliquot from clear portion~~ Not Nec JMD

~~X NWTPH-Dx - run acid wash/silica gel cleanup~~ NA JMD

___ run samples standardized to _____ product

___ Analyze for EPH if no specific product identified

VOC/BTEX/VPH (soil):
___ non-preserved
___ preserved w/methanol
___ preserved w/sodium bisulfate
___ Freeze upon receipt

___ Dissolved metal water samples field filtered

Other

Special Shipment/Handling or Storage Requirements Cooler with Wet Ice

Method of Shipment Drop off at ARI

Relinquished by	Received by	Relinquished by	Received by
Signature	Signature	Signature	Signature
Printed Name Jeremy Davis	Printed Name A. Volgardsen	Printed Name	Printed Name
Company LAI	Company ARI	Company	Company
Date 9/8/11 Time 1513	Date 9/8/11 Time 1513	Date Time	Date Time

WHITE COPY - Project File YELLOW COPY - Laboratory PINK COPY - Client Representative

Rev 8/09

Analytical Resources, Incorporated
Analytical Chemists and Consultants

Cooler Receipt Form

ARI Client: Boeing

Project Name: NBF DTS

COC No(s): _____ (NA)

Delivered by: Fed-Ex UPS Courier Hand Delivered Other: _____

Assigned ARI Job No: TL44

Tracking No: _____ (NA)

Preliminary Examination Phase:

Were intact, properly signed and dated custody seals attached to the outside of to cooler?	(YES)	NO
Were custody papers included with the cooler?	(YES)	NO
Were custody papers properly filled out (ink, signed, etc.)	(YES)	NO

Temperature of Cooler(s) (°C) (recommended 2.0-6.0 °C for chemistry)..... 5.4 5.3 ___ ___

If cooler temperature is out of compliance fill out form 00070F Temp Gun ID#: 91094160 9

Cooler Accepted by: AV Date: 9/8/11 Time: 1513

Complete custody forms and attach all shipping documents

Log-In Phase:

Was a temperature blank included in the cooler?		YES	(NO)
What kind of packing material was used? ... Bubble Wrap (Wet Ice) Gel Packs (Baggies) Foam Block Paper Other: _____			
Was sufficient ice used (if appropriate)?	NA	(YES)	NO
Were all bottles sealed in individual plastic bags?		(YES)	NO
Did all bottles arrive in good condition (unbroken)?		(YES)	NO
Were all bottle labels complete and legible?		(YES)	NO
Did the number of containers listed on COC match with the number of containers received?		(YES)	NO
Did all bottle labels and tags agree with custody papers?		(YES)	NO
Were all bottles used correct for the requested analyses?		(YES)	NO
Do any of the analyses (bottles) require preservation? (attach preservation sheet, excluding VOCs)...	(NA)	YES	NO
Were all VOC vials free of air bubbles?	(NA)	YES	NO
Was sufficient amount of sample sent in each bottle?		(YES)	NO
Date VOC Trip Blank was made at ARI	(NA)	_____	

Was Sample Split by ARI : (NA) YES Date/Time: _____ Equipment: _____ Split by: _____

Samples Logged by: JS Date: 9-8-11 Time: 1535

***** Notify Project Manager of discrepancies or concerns *****

Sample ID on Bottle	Sample ID on COC	Sample ID on Bottle	Sample ID on COC

Additional Notes, Discrepancies, & Resolutions:

By: Date:

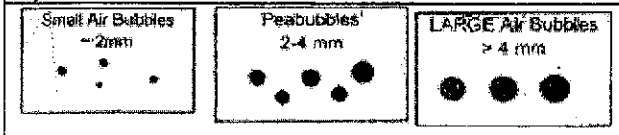

Small → "sm"
Peabubbles → "pb"
Large → "lg"
Headspace → "hs"

Sample ID Cross Reference Report

ANALYTICAL RESOURCES INCORPORATED

ARI Job No: TL44
Client: The Boeing Company
Project Event: 025.082.311.001
Project Name: NBF-DTS

	Sample ID	ARI Lab ID	ARI LIMS ID	Matrix	Sample Date/Time	VTSR
1.	NBF-DTS-A-090811	TL44A	11-19556	Water	09/08/11 13:05	09/08/11 15:13
2.	NBF-DTS-B-090811	TL44B	11-19557	Water	09/08/11 13:00	09/08/11 15:13

Printed 09/08/11

ANALYTICAL RESOURCES INCORPORATED

ORGANICS ANALYSIS DATA SHEET
PCB by GC/ECD Method SW8082

Sample ID: NBF-DTS-A-090811
SAMPLE

Lab Sample ID: TL44A
LIMS ID: 11-19556
Matrix: Water
Data Release Authorized:
Reported: 09/12/11

QC Report No: TL44-The Boeing Company
Project: NBF-DTS
025.082.311.001
Date Sampled: 09/08/11
Date Received: 09/08/11

Date Extracted: 09/08/11
Date Analyzed: 09/09/11 15:40
Instrument/Analyst: ECD5/AAR
GPC Cleanup: No
Sulfur Cleanup: Yes

Sample Amount: 500 mL
Final Extract Volume: 1.0 mL
Dilution Factor: 1.00
Silica Gel: No
Acid Cleanup: Yes

CAS Number	Analyte	RL	Result
12674-11-2	Aroclor 1016	0.10	< 0.10 U
53469-21-9	Aroclor 1242	0.10	< 0.10 U
12672-29-6	Aroclor 1248	0.10	< 0.10 U
11097-69-1	Aroclor 1254	0.10	< 0.10 U
11096-82-5	Aroclor 1260	0.10	< 0.10 U
11104-28-2	Aroclor 1221	0.10	< 0.10 U
11141-16-5	Aroclor 1232	0.10	< 0.10 U
37324-23-5	Aroclor 1262	0.10	< 0.10 U

Reported in µg/L (ppb)

PCB Surrogate Recovery

Decachlorobiphenyl	64.5%
Tetrachlorometaxylene	58.5%

ANALYTICAL RESOURCES INCORPORATED

ORGANICS ANALYSIS DATA SHEET
PCB by GC/ECD Method SW8082

Sample ID: NBF-DTS-B-090811
SAMPLE

Lab Sample ID: TL44B
LIMS ID: 11-19557
Matrix: Water
Data Release Authorized:
Reported: 09/12/11

QC Report No: TL44-The Boeing Company
Project: NBF-DTS
025.082.311.001
Date Sampled: 09/08/11
Date Received: 09/08/11

Date Extracted: 09/08/11
Date Analyzed: 09/09/11 15:59
Instrument/Analyst: ECD5/AAR
GPC Cleanup: No
Sulfur Cleanup: Yes

Sample Amount: 500 mL
Final Extract Volume: 1.0 mL
Dilution Factor: 1.00
Silica Gel: No
Acid Cleanup: Yes

CAS Number	Analyte	RL	Result
12674-11-2	Aroclor 1016	0.10	< 0.10 U
53469-21-9	Aroclor 1242	0.10	< 0.10 U
12672-29-6	Aroclor 1248	0.10	< 0.10 U
11097-69-1	Aroclor 1254	0.10	< 0.10 U
11096-82-5	Aroclor 1260	0.10	< 0.10 U
11104-28-2	Aroclor 1221	0.10	< 0.10 U
11141-16-5	Aroclor 1232	0.10	< 0.10 U
37324-23-5	Aroclor 1262	0.10	< 0.10 U

Reported in µg/L (ppb)

PCB Surrogate Recovery

Decachlorobiphenyl	61.2%
Tetrachlorometaxylene	49.5%

ANALYTICAL RESOURCES INCORPORATED

ORGANICS ANALYSIS DATA SHEET
PCB by GC/ECD Method SW8082

Sample ID: MB-090811
METHOD BLANK

Lab Sample ID: MB-090811
LIMS ID: 11-19556
Matrix: Water
Data Release Authorized:
Reported: 09/12/11

QC Report No: TL44-The Boeing Company
Project: NBF-DTS
025.082.311.001
Date Sampled: NA
Date Received: NA

Date Extracted: 09/08/11
Date Analyzed: 09/09/11 14:24
Instrument/Analyst: ECD5/AAR
GPC Cleanup: No
Sulfur Cleanup: Yes

Sample Amount: 500 mL
Final Extract Volume: 1.0 mL
Dilution Factor: 1.00
Silica Gel: No
Acid Cleanup: Yes

CAS Number	Analyte	RL	Result
12674-11-2	Aroclor 1016	0.10	< 0.10 U
53469-21-9	Aroclor 1242	0.10	< 0.10 U
12672-29-6	Aroclor 1248	0.10	< 0.10 U
11097-69-1	Aroclor 1254	0.10	< 0.10 U
11096-82-5	Aroclor 1260	0.10	< 0.10 U
11104-28-2	Aroclor 1221	0.10	< 0.10 U
11141-16-5	Aroclor 1232	0.10	< 0.10 U
37324-23-5	Aroclor 1262	0.10	< 0.10 U

Reported in µg/L (ppb)

PCB Surrogate Recovery

Decachlorobiphenyl	65.0%
Tetrachlorometaxylene	50.8%

ANALYTICAL RESOURCES INCORPORATED

SW8082/PCB WATER SURROGATE RECOVERY SUMMARY

Matrix: Water

QC Report No: TL44-The Boeing Company
Project: NBF-DTS
025.082.311.001

Client ID	DCBP % REC	DCBP LCL-UCL	TCMX % REC	TCMX LCL-UCL	TOT OUT
MB-090811	65.0%	39-116	50.8%	29-100	0
LCS-090811	63.8%	39-116	45.5%	29-100	0
LCSD-090811	56.0%	39-116	36.8%	29-100	0
NBF-DTS-A-090811	64.5%	10-128	58.5%	25-100	0
NBF-DTS-B-090811	61.2%	10-128	49.5%	25-100	0

Prep Method: SW3510C
Log Number Range: 11-19556 to 11-19557

FORM-II SW8082

ANALYTICAL RESOURCES INCORPORATED

ORGANICS ANALYSIS DATA SHEET
PCB by GC/ECD Method SW8082

Sample ID: LCS-090811
LCS/LCSD

Lab Sample ID: LCS-090811
LIMS ID: 11-19556
Matrix: Water
Data Release Authorized:
Reported: 09/12/11

QC Report No: TL44-The Boeing Company
Project: NBF-DTS
025.082.311.001
Date Sampled: NA
Date Received: NA

Date Extracted LCS/LCSD: 09/08/11

Date Analyzed LCS: 09/09/11 14:43
LCSD: 09/09/11 15:02
Instrument/Analyst LCS: ECD5/AAR
LCSD: ECD5/AAR
GPC Cleanup: No
Sulfur Cleanup: Yes

Sample Amount LCS: 500 mL
LCSD: 500 mL
Final Extract Volume LCS: 1.0 mL
LCSD: 1.0 mL
Dilution Factor LCS: 1.00
LCSD: 1.00
Silica Gel: No
Acid Cleanup: Yes

Analyte	LCS	Spike Added-LCS	LCS Recovery	LCSD	Spike Added-LCSD	LCSD Recovery	RPD
Aroclor 1016	0.563	1.00	56.3%	0.491	1.00	49.1%	13.7%
Aroclor 1260	0.636	1.00	63.6%	0.562	1.00	56.2%	12.4%

PCB Surrogate Recovery

	LCS	LCSD
Decachlorobiphenyl	63.8%	56.0%
Tetrachlorometaxylene	45.5%	36.8%

Results reported in µg/L
RPD calculated using sample concentrations per SW846.

Analytical Resources, Incorporated
Analytical Chemists and Consultants

September 19, 2011

Jeremy Davis
Landau Associates, Inc.
130 Second Ave
Edmonds, WA 98020

RE: Project: NBF – DTS 025.082.311.001
ARI Job: TM22

Dear Jeremy:

Please find enclosed the Chain of Custody (COC) record, sample receipt documentation, and analytical results for the above referenced project. Analytical Resources, Inc. (ARI) accepted two water samples in good condition on September 14, 2011. One cooler was received with a temperature of 9.4°C.
Six bottles were received for Oil and Grease analysis and three bottles each sample were composited per Landau Associates.

The samples were analyzed for PCBs and Oil and Grease, as requested on the COC.

There were no irregularities with the samples.

Quality control analysis results are included for your review. Copies of the reports and all associated raw data will be kept on file electronically at ARI. If you have any questions or require additional information, please contact me at your convenience.

Sincerely,
ANALYTICAL RESOURCES, INC

Kelly Bottem
Client Services Manager
(206) 695-6211
kellyb@arilabs.com
www.arilabs.com

cc: Carl Bach, The Boeing Company, P.O. Box 3707, M/S 1W-12, Seattle, WA 98124-2207

4611 South 134th Place, Suite 100 • Tukwila WA 98168 • **206-695-6200** • **206-695-6201** fax

☒ Seattle/Edmonds (425) 778-0907
☐ Tacoma (253) 926-2493
☐ Spokane (509) 327-9737
☐ Portland (503) 542-1080
☐ _____

LANDAU ASSOCIATES

Chain-of-Custody Record

TM22

Date 9/14/11
Page 1 of 1

Project Name NBF
Project No. 025-082-311-001
Project Location/Event NBF-DTS
Sampler's Name Jeremy Davis
Project Contact Jeremy Davis, Carl B, Jack
Send Results To Jeremy Davis, Carl B, Jack K

Turnaround Time
☐ Standard
☒ Accelerated
~~☒~~ 72 hr

Testing Parameters

Sample I.D.	Date	Time	Matrix	No. of Containers	FOG	PCBs (MTCA)	Observations/Comments
NBF-DTS-A-091411	9/14/11	1435	W	5	✓	✓	~~X Allow water samples to settle, collect aliquot from clear portion~~ NA JMD
NBF-DTS-B-091411	"	1420	"	5	✓	✓	~~X NWTPH-Dx - run acid wash/silica gel cleanup~~ NA JMD

___ run samples standardized to _____ product

___ Analyze for EPH if no specific product identified

VOC/BTEX/VPH (soil):
___ non-preserved
___ preserved w/methanol
___ preserved w/sodium bisulfate
___ Freeze upon receipt

___ Dissolved metal water samples field filtered

Other FOG TIMES: ~~A~~ 1435, 1440, 1445
~~B~~ 1420, 1425, 1430

Special Shipment/Handling or Storage Requirements Cooler with wet ice

Method of Shipment Drop off @ ARI

Relinquished by	Received by	Relinquished by	Received by
Signature [signature]	Signature [signature]	Signature	Signature
Printed Name Jeremy Davis	Printed Name Thyler Streeter	Printed Name	Printed Name
Company LAI	Company ARI	Company	Company
Date 9/13/11 Time 1515	Date 9-14-11 Time 1515	Date Time	Date Time

WHITE COPY - Project File YELLOW COPY - Laboratory PINK COPY - Client Representative

Rev 8/09

Analytical Resources, Incorporated
Analytical Chemists and Consultants

Cooler Receipt Form

ARI Client: Boeing

Project Name: N BF

COC No(s): _____ NA

Delivered by: Fed-Ex UPS Courier Hand Delivered Other: _____

Assigned ARI Job No.: TM 22

Tracking No.: _____ NA

Preliminary Examination Phase:

Were intact, properly signed and dated custody seals attached to the outside of to cooler?	YES	NO
Were custody papers included with the cooler?	YES	NO
Were custody papers properly filled out (ink, signed, etc.)	YES	NO
Temperature of Cooler(s) (°C) (recommended 2.0-6.0 °C for chemistry)	9.4	

If cooler temperature is out of compliance fill out form 00070F

Temp Gun ID#: 908 77952

Cooler Accepted by: TS Date: 9-14-11 Time: 1515

Complete custody forms and attach all shipping documents

Log-In Phase:

Was a temperature blank included in the cooler?		YES	NO
What kind of packing material was used?	Bubble Wrap Wet Ice Gel Packs Baggies Foam Block Paper Other:		
Was sufficient ice used (if appropriate)?	NA	YES	NO
Were all bottles sealed in individual plastic bags?		YES	NO
Did all bottles arrive in good condition (unbroken)?		YES	NO
Were all bottle labels complete and legible?		YES	NO
Did the number of containers listed on COC match with the number of containers received?		YES	NO
Did all bottle labels and tags agree with custody papers?		YES	NO
Were all bottles used correct for the requested analyses?		YES	NO
Do any of the analyses (bottles) require preservation? (attach preservation sheet, excluding VOCs)	NA	YES	NO
Were all VOC vials free of air bubbles?	NA	YES	NO
Was sufficient amount of sample sent in each bottle?		YES	NO
Date VOC Trip Blank was made at ARI	NA		

Was Sample Split by ARI: NA YES Date/Time: _____ Equipment: _____ Split by: _____

Samples Logged by: TS Date: 9-14-11 Time: 1536

***** Notify Project Manager of discrepancies or concerns *****

Sample ID on Bottle	Sample ID on COC	Sample ID on Bottle	Sample ID on COC

Additional Notes, Discrepancies, & Resolutions:

By: _____ Date _____

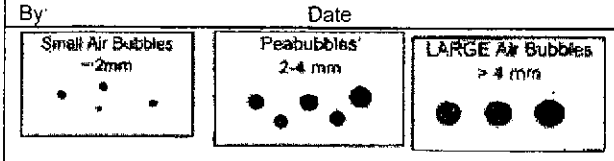

Small → "sm"
Peabubbles → "pb"
Large → "lg"
Headspace → "hs"

Analytical Resources, Incorporated
Analytical Chemists and Consultants

Cooler Temperature Compliance Form

TM22

Cooler#: 1 Temperature(°C): 9.5

Sample ID	Bottle Count	Bottle Type
All samples out of temp compliance		

Cooler#: _____ Temperature(°C): _____

Sample ID	Bottle Count	Bottle Type

Cooler#: _____ Temperature(°C): _____

Sample ID	Bottle Count	Bottle Type

Cooler#: _____ Temperature(°C): _____

Sample ID	Bottle Count	Bottle Type

Completed by: TS Date: 9-14-11 Time: 15 45

PRESERVATION VERIFICATION 09/14/11

ANALYTICAL RESOURCES INCORPORATED

ARI Job No: **TM22**

PC: Kelly
VTSR: 09/14/11

Inquiry Number: NONE
Analysis Requested: 09/15/11
Contact: Bach,Carl
Client: The Boeing Company
Logged by: TS
Sample Set Used: Yes-481
Validatable Package: No
Deliverables:

Project #: 025.082.311.001
Project: NBF
Sample Site:
SDG No:
Analytical Protocol: In-house

LOGNUM ARI ID	CLIENT ID	CN >12	WAD >12	NH3 <2	COD <2	FOG <2	MET <2	PHEN <2	PHOS <2	TKN <2	NO23 <2	TOC <2	S2 >9	AK102 <2	Fe2+ <2	DMET FLT	DOC FLT	PARAMETER	ADJUSTED TO	LOT NUMBER	AMOUNT ADDED	DATE/BY
11-19970 **TM22A**	NBF-DTS-A-091411					pass																
11-19971 **TM22B**	NBF-DTS-B-091411					pass																

Checked By TS Date 9-14-11

Sample ID Cross Reference Report

ANALYTICAL RESOURCES INCORPORATED

ARI Job No: TM22
Client: The Boeing Company
Project Event: 025.082.311.001
Project Name: NBF

	Sample ID	ARI Lab ID	ARI LIMS ID	Matrix	Sample Date/Time	VTSR
1.	NBF-DTS-A-091411	TM22A	11-19970	Water	09/14/11 14:35	09/14/11 15:15
2.	NBF-DTS-B-091411	TM22B	11-19971	Water	09/14/11 14:20	09/14/11 15:15

Printed 09/14/11

ANALYTICAL RESOURCES INCORPORATED

ORGANICS ANALYSIS DATA SHEET
PCB by GC/ECD Method SW8082

Sample ID: NBF-DTS-A-091411
SAMPLE

Lab Sample ID: TM22A
LIMS ID: 11-19970
Matrix: Water
Data Release Authorized:
Reported: 09/19/11

QC Report No: TM22-The Boeing Company
Project: NBF
025.082.311.001
Date Sampled: 09/14/11
Date Received: 09/14/11

Date Extracted: 09/15/11
Date Analyzed: 09/16/11 12:39
Instrument/Analyst: ECD7/JGR
GPC Cleanup: No
Sulfur Cleanup: Yes

Sample Amount: 500 mL
Final Extract Volume: 1.0 mL
Dilution Factor: 1.00
Silica Gel: No
Acid Cleanup: Yes

CAS Number	Analyte	RL	Result
12674-11-2	Aroclor 1016	0.10	< 0.10 U
53469-21-9	Aroclor 1242	0.10	< 0.10 U
12672-29-6	Aroclor 1248	0.10	< 0.10 U
11097-69-1	Aroclor 1254	0.10	< 0.10 U
11096-82-5	Aroclor 1260	0.10	< 0.10 U
11104-28-2	Aroclor 1221	0.10	< 0.10 U
11141-16-5	Aroclor 1232	0.10	< 0.10 U
37324-23-5	Aroclor 1262	0.10	< 0.10 U

Reported in µg/L (ppb)

PCB Surrogate Recovery

Decachlorobiphenyl	81.0%
Tetrachlorometaxylene	56.5%

ANALYTICAL RESOURCES INCORPORATED

ORGANICS ANALYSIS DATA SHEET
PCB by GC/ECD Method SW8082

Sample ID: NBF-DTS-B-091411
SAMPLE

Lab Sample ID: TM22B
LIMS ID: 11-19971
Matrix: Water
Data Release Authorized:
Reported: 09/19/11

QC Report No: TM22-The Boeing Company
Project: NBF
025.082.311.001
Date Sampled: 09/14/11
Date Received: 09/14/11

Date Extracted: 09/15/11
Date Analyzed: 09/16/11 13:02
Instrument/Analyst: ECD7/JGR
GPC Cleanup: No
Sulfur Cleanup: Yes

Sample Amount: 500 mL
Final Extract Volume: 1.0 mL
Dilution Factor: 1.00
Silica Gel: No
Acid Cleanup: Yes

CAS Number	Analyte	RL	Result
12674-11-2	Aroclor 1016	0.10	< 0.10 U
53469-21-9	Aroclor 1242	0.10	< 0.10 U
12672-29-6	Aroclor 1248	0.10	< 0.10 U
11097-69-1	Aroclor 1254	0.10	< 0.10 U
11096-82-5	Aroclor 1260	0.10	< 0.10 U
11104-28-2	Aroclor 1221	0.10	< 0.10 U
11141-16-5	Aroclor 1232	0.10	< 0.10 U
37324-23-5	Aroclor 1262	0.10	< 0.10 U

Reported in µg/L (ppb)

PCB Surrogate Recovery

Decachlorobiphenyl	77.2%
Tetrachlorometaxylene	58.0%

ANALYTICAL RESOURCES INCORPORATED

ORGANICS ANALYSIS DATA SHEET
PCB by GC/ECD Method SW8082

Sample ID: MB-091511
METHOD BLANK

Lab Sample ID: MB-091511
LIMS ID: 11-19970
Matrix: Water
Data Release Authorized:
Reported: 09/19/11

QC Report No: TM22-The Boeing Company
Project: NBF
025.082.311.001
Date Sampled: NA
Date Received: NA

Date Extracted: 09/15/11
Date Analyzed: 09/16/11 11:31
Instrument/Analyst: ECD7/JGR
GPC Cleanup: No
Sulfur Cleanup: Yes

Sample Amount: 500 mL
Final Extract Volume: 1.0 mL
Dilution Factor: 1.00
Silica Gel: No
Acid Cleanup: Yes

CAS Number	Analyte	RL	Result
12674-11-2	Aroclor 1016	0.10	< 0.10 U
53469-21-9	Aroclor 1242	0.10	< 0.10 U
12672-29-6	Aroclor 1248	0.10	< 0.10 U
11097-69-1	Aroclor 1254	0.10	< 0.10 U
11096-82-5	Aroclor 1260	0.10	< 0.10 U
11104-28-2	Aroclor 1221	0.10	< 0.10 U
11141-16-5	Aroclor 1232	0.10	< 0.10 U
37324-23-5	Aroclor 1262	0.10	< 0.10 U

Reported in µg/L (ppb)

PCB Surrogate Recovery

Decachlorobiphenyl	80.2%
Tetrachlorometaxylene	54.2%

ANALYTICAL RESOURCES INCORPORATED

SW8082/PCB WATER SURROGATE RECOVERY SUMMARY

Matrix: Water

QC Report No: TM22-The Boeing Company
Project: NBF
025.082.311.001

Client ID	DCBP % REC	DCBP LCL-UCL	TCMX % REC	TCMX LCL-UCL	TOT OUT
MB-091511	80.2%	39-116	54.2%	29-100	0
LCS-091511	78.0%	39-116	54.0%	29-100	0
LCSD-091511	76.8%	39-116	52.0%	29-100	0
NBF-DTS-A-091411	81.0%	10-128	56.5%	25-100	0
NBF-DTS-B-091411	77.2%	10-128	58.0%	25-100	0

Prep Method: SW3510C
Log Number Range: 11-19970 to 11-19971

FORM-II SW8082

ANALYTICAL RESOURCES INCORPORATED

ORGANICS ANALYSIS DATA SHEET
PCB by GC/ECD Method SW8082

Sample ID: LCS-091511
LCS/LCSD

Lab Sample ID: LCS-091511
LIMS ID: 11-19970
Matrix: Water
Data Release Authorized:
Reported: 09/19/11

QC Report No: TM22-The Boeing Company
Project: NBF
025.082.311.001
Date Sampled: NA
Date Received: NA

Date Extracted LCS/LCSD: 09/15/11

Date Analyzed LCS: 09/16/11 11:54
LCSD: 09/16/11 12:16
Instrument/Analyst LCS: ECD7/JGR
LCSD: ECD7/JGR
GPC Cleanup: No
Sulfur Cleanup: Yes

Sample Amount LCS: 500 mL
LCSD: 500 mL
Final Extract Volume LCS: 1.0 mL
LCSD: 1.0 mL
Dilution Factor LCS: 1.00
LCSD: 1.00
Silica Gel: No
Acid Cleanup: Yes

Analyte	LCS	Spike Added-LCS	LCS Recovery	LCSD	Spike Added-LCSD	LCSD Recovery	RPD
Aroclor 1016	0.640	1.00	64.0%	0.632	1.00	63.2%	1.3%
Aroclor 1260	0.773	1.00	77.3%	0.753	1.00	75.3%	2.6%

PCB Surrogate Recovery

	LCS	LCSD
Decachlorobiphenyl	78.0%	76.8%
Tetrachlorometaxylene	54.0%	52.0%

Results reported in µg/L
RPD calculated using sample concentrations per SW846.

SAMPLE RESULTS-CONVENTIONALS
TM22-The Boeing Company

ANALYTICAL RESOURCES INCORPORATED

Matrix: Water
Data Release Authorized:
Reported: 09/19/11

Project: NBF
Event: 025.082.311.001
Date Sampled: 09/14/11
Date Received: 09/14/11

Client ID: NBF-DTS-A-091411
ARI ID: 11-19970 TM22A

Analyte	Date Batch	Method	Units	RL	Sample
HEM Oil & Grease	09/16/11 091611#1	EPA 1664A	mg/L	3.3	< 3.3 U

RL Analytical reporting limit
U Undetected at reported detection limit

SAMPLE RESULTS-CONVENTIONALS
TM22-The Boeing Company

ANALYTICAL RESOURCES INCORPORATED

Matrix: Water
Data Release Authorized:
Reported: 09/19/11

Project: NBF
Event: 025.082.311.001
Date Sampled: 09/14/11
Date Received: 09/14/11

Client ID: NBF-DTS-B-091411
ARI ID: 11-19971 TM22B

Analyte	Date Batch	Method	Units	RL	Sample
HEM Oil & Grease	09/16/11 091611#1	EPA 1664A	mg/L	3.3	< 3.3 U

RL Analytical reporting limit
U Undetected at reported detection limit

METHOD BLANK RESULTS-CONVENTIONALS
TM22-The Boeing Company

ANALYTICAL RESOURCES INCORPORATED

Matrix: Water
Data Release Authorized:
Reported: 09/19/11

Project: NBF
Event: 025.082.311.001
Date Sampled: NA
Date Received: NA

Analyte	Method	Date	Units	Blank	ID
HEM Oil & Grease	EPA 1664A	09/16/11	mg/L	< 5.0 U	

LAB CONTROL RESULTS-CONVENTIONALS
TM22-The Boeing Company

ANALYTICAL RESOURCES INCORPORATED

Matrix: Water
Data Release Authorized:
Reported: 09/19/11

Project: NBF
Event: 025.082.311.001
Date Sampled: NA
Date Received: NA

Analyte/Method	QC ID	Date	Units	LCS	Spike Added	Recovery
HEM Oil & Grease EPA 1664A	ICVL	09/16/11	mg/L	36.4	40.1	90.8%

Analytical Resources, Incorporated
Analytical Chemists and Consultants

September 26, 2011

Jeremy Davis
Landau Associates, Inc.
130 Second Ave
Edmonds, WA 98020

RE: Project: NBF – DTS 025082.311.001
ARI Job: TN59

Dear Jeremy:

Please find enclosed the Chain of Custody (COC) record, sample receipt documentation, and analytical results for the above referenced project. Analytical Resources, Inc. (ARI) accepted two water samples in good condition on September 22, 2011. One cooler was received with a temperature of 16.1°C.

The samples were analyzed for PCBs, as requested on the COC.

There were no irregularities with the samples.

Quality control analysis results are included for your review. Copies of the reports and all associated raw data will be kept on file electronically at ARI. If you have any questions or require additional information, please contact me at your convenience.

Sincerely,
ANALYTICAL RESOURCES, INC

Eric Branson
Project Manager
-for-
Kelly Bottem
Client Services Manager
(206) 695-6211
kellyb@arilabs.com
www.arilabs.com

cc: Carl Bach, The Boeing Company, P.O. Box 3707, M/S 1W-12, Seattle, WA 98124-2207

4611 South 134th Place, Suite 100 • Tukwila WA 98168 • **206-695-6200** • **206-695-6201** fax

Sample ID Cross Reference Report

ANALYTICAL RESOURCES INCORPORATED

ARI Job No: TN59
Client: The Boeing Company
Project Event: 025082.311.001
Project Name: NBF-DTS

	Sample ID	ARI Lab ID	ARI LIMS ID	Matrix	Sample Date/Time	VTSR
1.	NBF-DTS-B-092211	TN59A	11-20766	Water	09/22/11 13:50	09/22/11 14:20
2.	NBF-DTS-A-092211	TN59B	11-20767	Water	09/22/11 14:05	09/22/11 14:20

Printed 09/22/11

☒ Seattle/Edmonds (425) 778-0907
☐ Tacoma (253) 926-2493
☐ Spokane (509) 327-9737
☐ Portland (503) 542-1080
☐ _____

LANDAU ASSOCIATES

Chain-of-Custody Record

Date 9/22/11
Page 1 of 1

Project Name NBF-DTS Project No. 025082.311.001
Project Location/Event SEATTLE, WA / WEEKLY SAMPLING
Sampler's Name DYLAN FRAZIER
Project Contact JEREMY DAVIS, CARL BRAUN, JOE KALMAN
Send Results To JEREMY DAVIS, CARL BRAUN, JOE KALMAN

Testing Parameters

Turnaround Time
☐ Standard
☐ Accelerated
☒ 72 HR

Sample I.D.	Date	Time	Matrix	No. of Containers	PCBs (MTCA)												Observations/Comments
NBF-DTS-B-092211	9/22/11	1350	H_2O	2	X												~~X Allow water samples to settle, collect aliquot from clear portion~~ DP
NBF-DTS-A-092211	9/22/11	1405	H_2O	2	X												~~X NWTPH-Dx - run acid wash/silica gel cleanup~~ DP

___ run samples standardized to _____ product
___ Analyze for EPH if no specific product identified
VOC/BTEX/VPH (soil):
___ non-preserved
___ preserved w/methanol
___ preserved w/sodium bisulfate
___ Freeze upon receipt
___ Dissolved metal water samples field filtered
Other _____

Special Shipment/Handling or Storage Requirements ON ICE
Method of Shipment DROP OFF AT ARI

Relinquished by	Received by	Relinquished by	Received by
Signature: [signature]	Signature: [signature]	Signature	Signature
Printed Name: DYLAN FRAZIER	Printed Name: A. Volgardsen	Printed Name	Printed Name
Company: LANDAU	Company: ARI	Company	Company
Date: 9/22/11 Time: 1420	Date: 9/22/11 Time: 1420	Date Time	Date Time

WHITE COPY - Project File YELLOW COPY - Laboratory PINK COPY - Client Representative

Rev 8/09

Analytical Resources, Incorporated
Analytical Chemists and Consultants

Cooler Receipt Form

ARI Client: Boeing
COC No(s): _____ (NA)
Assigned ARI Job No TN59

Project Name NBF-DTS
Delivered by: Fed-Ex UPS Courier Hand Delivered Other: _____
Tracking No: _____ (NA)

Preliminary Examination Phase:

Were intact, properly signed and dated custody seals attached to the outside of to cooler? (YES) NO
Were custody papers included with the cooler? (YES) NO
Were custody papers properly filled out (ink, signed, etc.) (YES) NO
Temperature of Cooler(s) (°C) (recommended 2.0-6.0 °C for chemistry) 16.1
If cooler temperature is out of compliance fill out form 00070F Temp Gun ID#: 90941619

Cooler Accepted by: AV Date 9/22/11 Time: 1420

Complete custody forms and attach all shipping documents

Log-In Phase:

Was a temperature blank included in the cooler? YES (NO)
What kind of packing material was used? Bubble Wrap (Wet Ice) Gel Packs Baggies Foam Block Paper Other: _____
Was sufficient ice used (if appropriate)? NA YES (NO)
Were all bottles sealed in individual plastic bags? YES (NO)
Did all bottles arrive in good condition (unbroken)? (YES) NO
Were all bottle labels complete and legible? (YES) NO
Did the number of containers listed on COC match with the number of containers received? (YES) NO
Did all bottle labels and tags agree with custody papers? (YES) NO
Were all bottles used correct for the requested analyses? (YES) NO
Do any of the analyses (bottles) require preservation? (attach preservation sheet, excluding VOCs)... (NA) YES NO
Were all VOC vials free of air bubbles? (NA) YES NO
Was sufficient amount of sample sent in each bottle? (YES) NO
Date VOC Trip Blank was made at ARI (NA) _____
Was Sample Split by ARI : (NA) YES Date/Time: _____ Equipment: _____ Split by: _____

Samples Logged by: JM Date 9/22/11 Time: 1435

***** Notify Project Manager of discrepancies or concerns *****

Sample ID on Bottle	Sample ID on COC	Sample ID on Bottle	Sample ID on COC

Additional Notes, Discrepancies, & Resolutions:

By: Date:

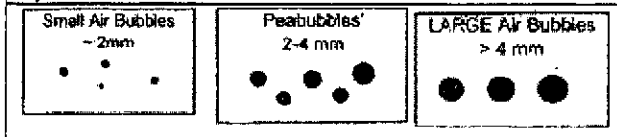

Small → "sm"
Peabubbles → "pb"
Large → "lg"
Headspace → "hs"

Analytical Resources, Incorporated
Analytical Chemists and Consultants

Cooler Temperature Compliance Form

TN59

Cooler#: 1	Temperature(°C): 16.1	
Sample ID	**Bottle Count**	**Bottle Type**
MBF-DTS-B-092211	2	2- 500 mL AG
MBF-DTS-A-092211	2	↓

Cooler#:	Temperature(°C):	
Sample ID	**Bottle Count**	**Bottle Type**

Cooler#:	Temperature(°C):	
Sample ID	**Bottle Count**	**Bottle Type**

Cooler#:	Temperature(°C):	
Sample ID	**Bottle Count**	**Bottle Type**

Completed by: JM Date: 9/22/11 Time: 1436

ANALYTICAL RESOURCES INCORPORATED

ORGANICS ANALYSIS DATA SHEET
PCB by GC/ECD Method SW8082

Sample ID: NBF-DTS-B-092211
SAMPLE

Lab Sample ID: TN59A
LIMS ID: 11-20766
Matrix: Water
Data Release Authorized:
Reported: 09/26/11

QC Report No: TN59-The Boeing Company
Project: NBF-DTS
025082.311.001
Date Sampled: 09/22/11
Date Received: 09/22/11

Date Extracted: 09/22/11
Date Analyzed: 09/23/11 14:49
Instrument/Analyst: ECD5/JGR
GPC Cleanup: No
Sulfur Cleanup: Yes

Sample Amount: 500 mL
Final Extract Volume: 1.0 mL
Dilution Factor: 1.00
Silica Gel: No
Acid Cleanup: Yes

CAS Number	Analyte	RL	Result
12674-11-2	Aroclor 1016	0.10	< 0.10 U
53469-21-9	Aroclor 1242	0.10	< 0.10 U
12672-29-6	Aroclor 1248	0.10	< 0.10 U
11097-69-1	Aroclor 1254	0.10	< 0.10 U
11096-82-5	Aroclor 1260	0.10	< 0.10 U
11104-28-2	Aroclor 1221	0.10	< 0.10 U
11141-16-5	Aroclor 1232	0.10	< 0.10 U
37324-23-5	Aroclor 1262	0.10	< 0.10 U

Reported in µg/L (ppb)

PCB Surrogate Recovery

Decachlorobiphenyl	44.5%
Tetrachlorometaxylene	39.8%

ANALYTICAL RESOURCES INCORPORATED

ORGANICS ANALYSIS DATA SHEET
PCB by GC/ECD Method SW8082

Sample ID: NBF-DTS-A-092211
SAMPLE

Lab Sample ID: TN59B
LIMS ID: 11-20767
Matrix: Water
Data Release Authorized:
Reported: 09/26/11

QC Report No: TN59-The Boeing Company
Project: NBF-DTS
025082.311.001
Date Sampled: 09/22/11
Date Received: 09/22/11

Date Extracted: 09/22/11
Date Analyzed: 09/23/11 15:08
Instrument/Analyst: ECD5/JGR
GPC Cleanup: No
Sulfur Cleanup: Yes

Sample Amount: 500 mL
Final Extract Volume: 1.0 mL
Dilution Factor: 1.00
Silica Gel: No
Acid Cleanup: Yes

CAS Number	Analyte	RL	Result
12674-11-2	Aroclor 1016	0.10	< 0.10 U
53469-21-9	Aroclor 1242	0.10	< 0.10 U
12672-29-6	Aroclor 1248	0.10	< 0.10 U
11097-69-1	Aroclor 1254	0.10	< 0.10 U
11096-82-5	Aroclor 1260	0.10	< 0.10 U
11104-28-2	Aroclor 1221	0.10	< 0.10 U
11141-16-5	Aroclor 1232	0.10	< 0.10 U
37324-23-5	Aroclor 1262	0.10	< 0.10 U

Reported in µg/L (ppb)

PCB Surrogate Recovery

Decachlorobiphenyl	71.2%
Tetrachlorometaxylene	67.8%

ANALYTICAL RESOURCES INCORPORATED

SW8082/PCB WATER SURROGATE RECOVERY SUMMARY

Matrix: Water

QC Report No: TN59-The Boeing Company
Project: NBF-DTS
025082.311.001

Client ID	DCBP % REC	DCBP LCL-UCL	TCMX % REC	TCMX LCL-UCL	TOT OUT
MB-092211	67.5%	39-116	50.5%	29-100	0
LCS-092211	69.0%	39-116	52.2%	29-100	0
LCSD-092211	68.8%	39-116	52.8%	29-100	0
NBF-DTS-B-092211	44.5%	10-128	39.8%	25-100	0
NBF-DTS-A-092211	71.2%	10-128	67.8%	25-100	0

Prep Method: SW3510C
Log Number Range: 11-20766 to 11-20767

FORM-II SW8082

ANALYTICAL RESOURCES INCORPORATED

ORGANICS ANALYSIS DATA SHEET
PCB by GC/ECD Method SW8082

Sample ID: LCS-092211
LCS/LCSD

Lab Sample ID: LCS-092211
LIMS ID: 11-20766
Matrix: Water
Data Release Authorized:
Reported: 09/26/11

QC Report No: TN59-The Boeing Company
Project: NBF-DTS
025082.311.001
Date Sampled: NA
Date Received: NA

Date Extracted LCS/LCSD: 09/22/11

Date Analyzed LCS: 09/23/11 14:11
LCSD: 09/23/11 14:30
Instrument/Analyst LCS: ECD5/JGR
LCSD: ECD5/JGR
GPC Cleanup: No
Sulfur Cleanup: Yes

Sample Amount LCS: 500 mL
LCSD: 500 mL
Final Extract Volume LCS: 1.0 mL
LCSD: 1.0 mL
Dilution Factor LCS: 1.00
LCSD: 1.00
Silica Gel: No
Acid Cleanup: Yes

Analyte	LCS	Spike Added-LCS	LCS Recovery	LCSD	Spike Added-LCSD	LCSD Recovery	RPD
Aroclor 1016	0.672	1.00	67.2%	0.664	1.00	66.4%	1.2%
Aroclor 1260	0.637	1.00	63.7%	0.642	1.00	64.2%	0.8%

PCB Surrogate Recovery

	LCS	LCSD
Decachlorobiphenyl	69.0%	68.8%
Tetrachlorometaxylene	52.2%	52.8%

Results reported in µg/L
RPD calculated using sample concentrations per SW846.

ANALYTICAL RESOURCES INCORPORATED

ORGANICS ANALYSIS DATA SHEET
PCB by GC/ECD Method SW8082

Sample ID: MB-092211
METHOD BLANK

Lab Sample ID: MB-092211
LIMS ID: 11-20766
Matrix: Water
Data Release Authorized:
Reported: 09/26/11

QC Report No: TN59-The Boeing Company
Project: NBF-DTS
025082.311.001
Date Sampled: NA
Date Received: NA

Date Extracted: 09/22/11
Date Analyzed: 09/23/11 13:52
Instrument/Analyst: ECD5/JGR
GPC Cleanup: No
Sulfur Cleanup: Yes

Sample Amount: 500 mL
Final Extract Volume: 1.0 mL
Dilution Factor: 1.00
Silica Gel: No
Acid Cleanup: Yes

CAS Number	Analyte	RL	Result
12674-11-2	Aroclor 1016	0.10	< 0.10 U
53469-21-9	Aroclor 1242	0.10	< 0.10 U
12672-29-6	Aroclor 1248	0.10	< 0.10 U
11097-69-1	Aroclor 1254	0.10	< 0.10 U
11096-82-5	Aroclor 1260	0.10	< 0.10 U
11104-28-2	Aroclor 1221	0.10	< 0.10 U
11141-16-5	Aroclor 1232	0.10	< 0.10 U
37324-23-5	Aroclor 1262	0.10	< 0.10 U

Reported in µg/L (ppb)

PCB Surrogate Recovery

Decachlorobiphenyl	67.5%
Tetrachlorometaxylene	50.5%

Analytical Resources, Incorporated
Analytical Chemists and Consultants

September 29, 2011

Jeremy Davis
Landau Associates, Inc.
130 Second Ave
Edmonds, WA 98020

RE: Project: NBF – DTS 025082.311.001
ARI Job: TO38

Dear Jeremy:

Please find enclosed the Chain of Custody (COC) record, sample receipt documentation, and analytical results for the above referenced project. Analytical Resources, Inc. (ARI) accepted two water samples in good condition on September 27, 2011. One cooler was received with a temperature of 1.6°C.

The samples were analyzed for PCBs, as requested on the COC.

There were no irregularities with the samples.

Quality control analysis results are included for your review. Copies of the reports and all associated raw data will be kept on file electronically at ARI. If you have any questions or require additional information, please contact me at your convenience.

Sincerely,
ANALYTICAL RESOURCES, INC

Kelly Bottem
Client Services Manager
(206) 695-6211
kellyb@arilabs.com
www.arilabs.com

cc: Carl Bach, The Boeing Company, P.O. Box 3707, M/S 1W-12, Seattle, WA 98124-2207

4611 South 134th Place, Suite 100 • Tukwila WA 98168 • **206-695-6200** • **206-695-6201** fax

LANDAU ASSOCIATES

☒ Seattle/Edmonds (425) 778-0907
☐ Tacoma (253) 926-2493
☐ Spokane (509) 327-9737
☐ Portland (503) 542-1080
☐ _____

TO 38

Chain-of-Custody Record

Date 9/27/11
Page 1 of 1

Project Name NBF-DTS Project No. _____
Project Location/Event NBF-DTS
Sampler's Name Jeremy D
Project Contact Jeremy D, Carl B, Joe K
Send Results To Jeremy D, Carl B, Joe K

Turnaround Time
☐ Standard
☒ Accelerated
72 HR

Testing Parameters

Sample I.D.	Date	Time	Matrix	No. of Containers	PCBs *
NBF-DTS-A-092711	9/27/11	1016	W	2 Amb	Y
NBF-DTS-B-092711	"	1012	"	2 Amb	Y

Observations/Comments

~~X Allow water samples to settle, collect aliquot from clear portion~~ not NEW SMD
~~X NWTPH-Dx - run acid wash/silica gel cleanup~~ NA - SMD

___ run samples standardized to _____ product
___ Analyze for EPH if no specific product identified
VOC/BTEX/VPH (soil):
___ non-preserved
___ preserved w/methanol
___ preserved w/sodium bisulfate
___ Freeze upon receipt
___ Dissolved metal water samples field filtered
Other
* MTCA

Special Shipment/Handling or Storage Requirements Cooler with Ice

Method of Shipment Drop off @ ARI

Relinquished by	Received by	Relinquished by	Received by
Signature	Signature	Signature	Signature
Jeremy Davis	A. Volgardsen		
Printed Name	Printed Name	Printed Name	Printed Name
LAI	ARI		
Company	Company	Company	Company
Date 9/27/11 Time 1345	Date 9/27/11 Time 1345	Date _____ Time _____	Date _____ Time _____

WHITE COPY - Project File YELLOW COPY - Laboratory PINK COPY - Client Representative

Rev 8/09

Analytical Resources, Incorporated
Analytical Chemists and Consultants

Cooler Receipt Form

ARI Client: Boeing

COC No(s): _____ (NA)

Assigned ARI Job No: T036

Project Name: NBF - DTS

Delivered by: Fed-Ex UPS Courier Hand Delivered Other: _____

Tracking No: _____ (NA)

Preliminary Examination Phase:

Were intact, properly signed and dated custody seals attached to the outside of to cooler? YES AV NO

Were custody papers included with the cooler? ..... YES NO

Were custody papers properly filled out (ink, signed, etc.) ..... YES NO

Temperature of Cooler(s) (°C) (recommended 2.0-6.0 °C for chemistry)..... 1.6 ___ ___ ___ ___ ___

If cooler temperature is out of compliance fill out form 00070F Temp Gun ID#: 90941 1019

Cooler Accepted by: AV Date: 9/27/11 Time: 1345

Complete custody forms and attach all shipping documents

Log-In Phase:

Was a temperature blank included in the cooler? ..... YES NO

What kind of packing material was used? ... Bubble Wrap Wet Ice Gel Packs Baggies Foam Block Paper Other: _____

Was sufficient ice used (if appropriate)? ..... NA YES NO

Were all bottles sealed in individual plastic bags? ..... YES NO

Did all bottles arrive in good condition (unbroken)? ..... YES NO

Were all bottle labels complete and legible? ..... YES NO

Did the number of containers listed on COC match with the number of containers received? ..... YES NO

Did all bottle labels and tags agree with custody papers? ..... YES NO

Were all bottles used correct for the requested analyses? ..... YES NO

Do any of the analyses (bottles) require preservation? (attach preservation sheet, excluding VOCs)... NA YES NO

Were all VOC vials free of air bubbles? ..... NA YES NO

Was sufficient amount of sample sent in each bottle? ..... YES NO

Date VOC Trip Blank was made at ARI..... NA _____

Was Sample Split by ARI : NA YES Date/Time: _____ Equipment: _____ Split by: _____

Samples Logged by: FS Date: 9-27-11 Time: 1412

***** Notify Project Manager of discrepancies or concerns *****

Sample ID on Bottle	Sample ID on COC	Sample ID on Bottle	Sample ID on COC

Additional Notes, Discrepancies, & Resolutions:

By: Date:

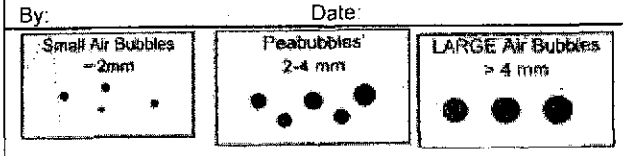

Small → "sm"	
Peabubbles → "pb"	
Large → "lg"	
Headspace → "hs"	

Sample ID Cross Reference Report

ANALYTICAL RESOURCES INCORPORATED

ARI Job No: TO38
Client: The Boeing Company
Project Event: N/A
Project Name: NBF-DTS

	Sample ID	ARI Lab ID	ARI LIMS ID	Matrix	Sample Date/Time	VTSR
1.	NBF-DTS-A-092711	TO38A	11-21293	Water	09/27/11 10:16	09/27/11 13:45
2.	NBF-DTS-B-092711	TO38B	11-21294	Water	09/27/11 10:12	09/27/11 13:45

Printed 09/27/11

ANALYTICAL RESOURCES INCORPORATED

ORGANICS ANALYSIS DATA SHEET
PCB by GC/ECD Method SW8082

Sample ID: NBF-DTS-A-092711
SAMPLE

Lab Sample ID: TO38A
LIMS ID: 11-21293
Matrix: Water
Data Release Authorized:
Reported: 09/29/11

QC Report No: TO38-The Boeing Company
Project: NBF-DTS

Date Sampled: 09/27/11
Date Received: 09/27/11

Date Extracted: 09/27/11
Date Analyzed: 09/28/11 09:15
Instrument/Analyst: ECD5/AAR
GPC Cleanup: No
Sulfur Cleanup: Yes

Sample Amount: 500 mL
Final Extract Volume: 1.0 mL
Dilution Factor: 1.00
Silica Gel: No
Acid Cleanup: Yes

CAS Number	Analyte	RL	Result
12674-11-2	Aroclor 1016	0.10	< 0.10 U
53469-21-9	Aroclor 1242	0.10	< 0.10 U
12672-29-6	Aroclor 1248	0.10	< 0.10 U
11097-69-1	Aroclor 1254	0.10	< 0.10 U
11096-82-5	Aroclor 1260	0.10	< 0.10 U
11104-28-2	Aroclor 1221	0.10	< 0.10 U
11141-16-5	Aroclor 1232	0.10	< 0.10 U
37324-23-5	Aroclor 1262	0.10	< 0.10 U

Reported in µg/L (ppb)

PCB Surrogate Recovery

Decachlorobiphenyl	64.8%
Tetrachlorometaxylene	55.2%

ANALYTICAL RESOURCES INCORPORATED

ORGANICS ANALYSIS DATA SHEET
PCB by GC/ECD Method SW8082

Sample ID: NBF-DTS-B-092711
SAMPLE

Lab Sample ID: TO38B
LIMS ID: 11-21294
Matrix: Water
Data Release Authorized:
Reported: 09/29/11

QC Report No: TO38-The Boeing Company
Project: NBF-DTS

Date Sampled: 09/27/11
Date Received: 09/27/11

Date Extracted: 09/27/11
Date Analyzed: 09/28/11 09:34
Instrument/Analyst: ECD5/AAR
GPC Cleanup: No
Sulfur Cleanup: Yes

Sample Amount: 500 mL
Final Extract Volume: 1.0 mL
Dilution Factor: 1.00
Silica Gel: No
Acid Cleanup: Yes

CAS Number	Analyte	RL	Result
12674-11-2	Aroclor 1016	0.10	< 0.10 U
53469-21-9	Aroclor 1242	0.10	< 0.10 U
12672-29-6	Aroclor 1248	0.10	< 0.10 U
11097-69-1	Aroclor 1254	0.10	< 0.10 U
11096-82-5	Aroclor 1260	0.10	< 0.10 U
11104-28-2	Aroclor 1221	0.10	< 0.10 U
11141-16-5	Aroclor 1232	0.10	< 0.10 U
37324-23-5	Aroclor 1262	0.10	< 0.10 U

Reported in µg/L (ppb)

PCB Surrogate Recovery

Decachlorobiphenyl	65.2%
Tetrachlorometaxylene	64.8%

ANALYTICAL RESOURCES INCORPORATED

ORGANICS ANALYSIS DATA SHEET
PCB by GC/ECD Method SW8082

Sample ID: MB-092711
METHOD BLANK

Lab Sample ID: MB-092711
LIMS ID: 11-21293
Matrix: Water
Data Release Authorized:
Reported: 09/29/11

QC Report No: TO38-The Boeing Company
Project: NBF-DTS

Date Sampled: NA
Date Received: NA

Date Extracted: 09/27/11
Date Analyzed: 09/28/11 08:18
Instrument/Analyst: ECD5/AAR
GPC Cleanup: No
Sulfur Cleanup: Yes

Sample Amount: 500 mL
Final Extract Volume: 1.0 mL
Dilution Factor: 1.00
Silica Gel: No
Acid Cleanup: Yes

CAS Number	Analyte	RL	Result
12674-11-2	Aroclor 1016	0.10	< 0.10 U
53469-21-9	Aroclor 1242	0.10	< 0.10 U
12672-29-6	Aroclor 1248	0.10	< 0.10 U
11097-69-1	Aroclor 1254	0.10	< 0.10 U
11096-82-5	Aroclor 1260	0.10	< 0.10 U
11104-28-2	Aroclor 1221	0.10	< 0.10 U
11141-16-5	Aroclor 1232	0.10	< 0.10 U
37324-23-5	Aroclor 1262	0.10	< 0.10 U

Reported in µg/L (ppb)

PCB Surrogate Recovery

Decachlorobiphenyl	68.0%
Tetrachlorometaxylene	51.5%

ANALYTICAL RESOURCES INCORPORATED

SW8082/PCB WATER SURROGATE RECOVERY SUMMARY

Matrix: Water

QC Report No: TO38-The Boeing Company
Project: NBF-DTS

Client ID	DCBP % REC	DCBP LCL-UCL	TCMX % REC	TCMX LCL-UCL	TOT OUT
MB-092711	68.0%	39-116	51.5%	29-100	0
LCS-092711	67.5%	39-116	53.0%	29-100	0
LCSD-092711	67.5%	39-116	57.0%	29-100	0
NBF-DTS-A-092711	64.8%	10-128	55.2%	25-100	0
NBF-DTS-B-092711	65.2%	10-128	64.8%	25-100	0

Prep Method: SW3510C
Log Number Range: 11-21293 to 11-21294

FORM-II SW8082

ANALYTICAL RESOURCES INCORPORATED

ORGANICS ANALYSIS DATA SHEET
PCB by GC/ECD Method SW8082

Sample ID: LCS-092711
LCS/LCSD

Lab Sample ID: LCS-092711
LIMS ID: 11-21293
Matrix: Water
Data Release Authorized:
Reported: 09/29/11

QC Report No: TO38-The Boeing Company
Project: NBF-DTS

Date Sampled: NA
Date Received: NA

Date Extracted LCS/LCSD: 09/27/11

Date Analyzed LCS: 09/28/11 08:37
LCSD: 09/28/11 08:56
Instrument/Analyst LCS: ECD5/AAR
LCSD: ECD5/AAR
GPC Cleanup: No
Sulfur Cleanup: Yes

Sample Amount LCS: 500 mL
LCSD: 500 mL
Final Extract Volume LCS: 1.0 mL
LCSD: 1.0 mL
Dilution Factor LCS: 1.00
LCSD: 1.00
Silica Gel: No
Acid Cleanup: Yes

Analyte	LCS	Spike Added-LCS	LCS Recovery	LCSD	Spike Added-LCSD	LCSD Recovery	RPD
Aroclor 1016	0.691	1.00	69.1%	0.713	1.00	71.3%	3.1%
Aroclor 1260	0.567	1.00	56.7%	0.559	1.00	55.9%	1.4%

PCB Surrogate Recovery

	LCS	LCSD
Decachlorobiphenyl	67.5%	67.5%
Tetrachlorometaxylene	53.0%	57.0%

Results reported in µg/L
RPD calculated using sample concentrations per SW846.

October 2011 Monthly Data Summary

CLEAR WATER SERVICES

Remediation Solutions for the Real World™ – Stormwater, Groundwater, and Waste Water

MONTHLY DATA SUMMARY FOR CESF OPERATIONS

Job name: Boeing Pipeline Dewatering
Job number: 11BOE1
Month: October-11
Prepared for: Glacier Environmental Services, Inc.

DATE	PRECIP	VOLUME TREATED (Gallons)	VOLUME DISCHARGED (Gallons)	SAND FILTER INFLUENT pH	SAND FILTER INFLUENT TURBIDITY (NTU)	SAND FILTER EFFLUENT pH	SAND FILTER EFFLUENT TURBIDITY (NTU)
-	-	-	-	AVG	AVG	AVG	AVG
10/1/2011	0.00						
10/2/2011	0.18						
10/3/2011	0.07	37,659	9,823	7.32	32.66	7.16	0.53
10/4/2011	0.06	10,425	4,234	7.31	19.00	7.24	0.43
10/5/2011	0.16	2,215	270	7.49	25.30	7.51	1.10
10/6/2011	0.17						
10/7/2011	0.06						
10/8/2011	0.01						
10/9/2011	0.06						
10/10/2011	0.00	2,016	363	7.45	9.20	7.64	1.20
10/11/2011	0.69	6,059	2,536	7.65	33.55	7.66	0.45
10/12/2011	0.01	25,229	11,499	7.61	24.56	7.63	0.52
10/13/2011	0.00	1,728	488	7.48	95.35	7.59	0.80
10/14/2011	0.01						
10/15/2011	0.00						
10/16/2011	0.00						
10/17/2011	0.00	33,339	1,344	7.68	43.13	7.76	1.40
10/18/2011	0.00	4,667	775	7.68	44.90	7.73	0.60
10/19/2011	0.00						
10/20/2011	0.01						
10/21/2011	0.02						
10/22/2011	0.38						
10/23/2011	0.00						
10/24/2011	0.02	4,154	382	7.71	13.50	7.90	1.00
10/25/2011	0.00	26,467	11,899	7.92	43.82	7.88	0.72
10/26/2011	0.01	22,738	10,085	8.08	76.42	7.97	0.65
10/27/2011	0.00	32,913	11,664	7.98	89.64	8.01	0.72
10/28/2011	0.39	27,290	11,850	7.74	31.98	7.87	0.68
10/29/2011	0.00						
10/30/2011	0.14						
10/31/2011	0.00						
Monthly	**Total**	**Total**	**Total**	**AVG**	**AVG**	**AVG**	**AVG**
	2.45	**236,899**	**77,212**	**7.65**	**41.64**	**7.68**	**0.77**

Analytical Resources, Incorporated
Analytical Chemists and Consultants

October 6, 2011

Jeremy Davis
Landau Associates, Inc.
130 Second Ave
Edmonds, WA 98020

RE: Project: NBF – DTS 025082.311.001
ARI Job: TP92

Dear Jeremy:

Please find enclosed the Chain of Custody (COC) record, sample receipt documentation, and analytical results for the above referenced project. Analytical Resources, Inc. (ARI) accepted two water samples in good condition on October 4, 2011. One cooler was received with a temperature of 10.6°C.

The samples were analyzed for PCBs, as requested on the COC.

There were no irregularities with the samples.

Quality control analysis results are included for your review. Copies of the reports and all associated raw data will be kept on file electronically at ARI. If you have any questions or require additional information, please contact me at your convenience.

Sincerely,
ANALYTICAL RESOURCES, INC

Kelly Bottem
Client Services Manager
(206) 695-6211
kellyb@arilabs.com
www.arilabs.com

cc: Carl Bach, The Boeing Company, P.O. Box 3707, M/S 1W-12, Seattle, WA 98124-2207

4611 South 134th Place, Suite 100 • Tukwila WA 98168 • **206-695-6200** • **206-695-6201** fax

☒ Seattle/Edmonds (425) 778-0907
☐ Tacoma (253) 926-2493
☐ Spokane (509) 327-9737
☐ Portland (503) 542-1080
☐ _____

LANDAU ASSOCIATES

Chain-of-Custody Record

TP92

Date 10/4/11

Page 1 of 1

Project Name NORTH DENNY FIELD-DTS Project No. 025082.311.001

Project Location/Event SEATTLE, WA / DTS WEEKLY SAMPLE

Sampler's Name DYLAN FRAZIER

Project Contact JEREMY DAVIS

Send Results To CARL BACH, JOE KALMAR, JEREMY DAVIS, ANNE HALLIWELL

Testing Parameters

Turnaround Time
☐ Standard
☐ Accelerated
☒ 72 HR

Sample I.D.	Date	Time	Matrix	No. of Containers	PCBs (MTCA)
NDF-DTS-A-100411	10/4/11	1340	H_2O	2	X
NDF-DTS-B-100411	10/4/11	1350	H_2O	2	X

Observations/Comments

~~X Allow water samples to settle, collect aliquot from clear portion~~ DP

~~X NWTPH-Dx - run acid wash/silica gel cleanup~~ DP

___ run samples standardized to _____ product

___ Analyze for EPH if no specific product identified

VOC/BTEX/VPH (soil):
___ non-preserved
___ preserved w/methanol
___ preserved w/sodium bisulfate
___ Freeze upon receipt

___ Dissolved metal water samples field filtered

Other _____

Special Shipment/Handling or Storage Requirements ON ICE

Method of Shipment DROP OFF AT ARI

Relinquished by	Received by	Relinquished by	Received by
Signature: [signature]	Signature: [signature]	Signature	Signature
Printed Name: DYLAN FRAZIER	Printed Name: Jennifer Millsap	Printed Name	Printed Name
Company: LANDAU	Company: ARI	Company	Company
Date 10/4/11 Time 1415	Date 10/11/11 Time 1415	Date ___ Time ___	Date ___ Time ___

WHITE COPY - Project File YELLOW COPY - Laboratory PINK COPY - Client Representative

Rev 8/09

Analytical Resources, Incorporated
Analytical Chemists and Consultants

Cooler Receipt Form

ARI Client: Boeing

Project Name: North Boeing Field - DTS

COC No(s): _____ NA

Delivered by: Fed-Ex UPS Courier Hand Delivered Other: _____

Assigned ARI Job No: 1 p97

Tracking No: _____ NA

Preliminary Examination Phase:

Were intact, properly signed and dated custody seals attached to the outside of to cooler? YES NO

Were custody papers included with the cooler? ..... YES NO

Were custody papers properly filled out (ink, signed, etc.) ..... YES NO

Temperature of Cooler(s) (°C) (recommended 2.0-6.0 °C for chemistry)..... 10.6

If cooler temperature is out of compliance fill out form 00070F

Temp Gun ID#: 90941619

Cooler Accepted by: JM Date: 10/4/11 Time: 1415

Complete custody forms and attach all shipping documents

Log-In Phase:

Was a temperature blank included in the cooler? ..... YES NO

What kind of packing material was used? ... Bubble Wrap Wet Ice Gel Packs Baggies Foam Block Paper Other: _____

Was sufficient ice used (if appropriate)? ..... NA YES NO

Were all bottles sealed in individual plastic bags? ..... YES NO

Did all bottles arrive in good condition (unbroken)? ..... YES NO

Were all bottle labels complete and legible? ..... YES NO

Did the number of containers listed on COC match with the number of containers received? ..... YES NO

Did all bottle labels and tags agree with custody papers? ..... YES NO

Were all bottles used correct for the requested analyses? ..... YES NO

Do any of the analyses (bottles) require preservation? (attach preservation sheet, excluding VOCs)... NA YES NO

Were all VOC vials free of air bubbles? ..... NA YES NO

Was sufficient amount of sample sent in each bottle? ..... YES NO

Date VOC Trip Blank was made at ARI..... NA _____

Was Sample Split by ARI : NA YES Date/Time: _____ Equipment: _____ Split by: _____

Samples Logged by: JS Date: 10-4-11 Time: 1443

***** Notify Project Manager of discrepancies or concerns *****

Sample ID on Bottle	Sample ID on COC	Sample ID on Bottle	Sample ID on COC

Additional Notes, Discrepancies, & Resolutions:

By: Date:

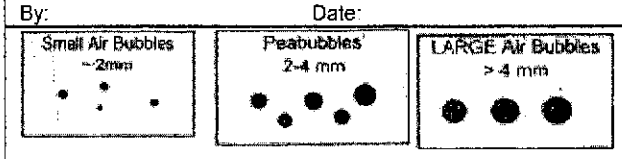

Small → "sm"
Peabubbles → "pb"
Large → "lg"
Headspace → "hs"

Sample ID Cross Reference Report

ANALYTICAL RESOURCES INCORPORATED

ARI Job No: TP92
Client: The Boeing Company
Project Event: 025082.311.001
Project Name: NBF-DTS

	Sample ID	ARI Lab ID	ARI LIMS ID	Matrix	Sample Date/Time	VTSR
1.	NBF-DTS-A-100411	TP92A	11-22230	Water	10/04/11 13:40	10/04/11 14:15
2.	NBF-DTS-B-100411	TP92B	11-22231	Water	10/04/11 13:50	10/04/11 14:15

Printed 10/04/11

Analytical Resources, Incorporated
Analytical Chemists and Consultants

Cooler Temperature Compliance Form

Cooler#: _____ Temperature(°C): 10.6

Sample ID	Bottle Count	Bottle Type
Samples recieved greater than 6°C		

Cooler#: _____ Temperature(°C): _____

Sample ID	Bottle Count	Bottle Type

Cooler#: _____ Temperature(°C): _____

Sample ID	Bottle Count	Bottle Type

Cooler#: _____ Temperature(°C): _____

Sample ID	Bottle Count	Bottle Type

Completed by: TS Date: 10-9-11 Time: 14:44

ANALYTICAL RESOURCES INCORPORATED

ORGANICS ANALYSIS DATA SHEET
PCB by GC/ECD Method SW8082

Sample ID: NBF-DTS-A-100411
SAMPLE

Lab Sample ID: TP92A
LIMS ID: 11-22230
Matrix: Water
Data Release Authorized: MW
Reported: 10/06/11

QC Report No: TP92-The Boeing Company
Project: NBF-DTS
025082.311.001
Date Sampled: 10/04/11
Date Received: 10/04/11

Date Extracted: 10/05/11
Date Analyzed: 10/05/11 19:36
Instrument/Analyst: ECD7/AAR
GPC Cleanup: No
Sulfur Cleanup: Yes

Sample Amount: 500 mL
Final Extract Volume: 1.0 mL
Dilution Factor: 1.00
Silica Gel: No
Acid Cleanup: Yes

CAS Number	Analyte	RL	Result
12674-11-2	Aroclor 1016	0.10	< 0.10 U
53469-21-9	Aroclor 1242	0.10	< 0.10 U
12672-29-6	Aroclor 1248	0.10	< 0.10 U
11097-69-1	Aroclor 1254	0.10	< 0.10 U
11096-82-5	Aroclor 1260	0.10	< 0.10 U
11104-28-2	Aroclor 1221	0.10	< 0.10 U
11141-16-5	Aroclor 1232	0.10	< 0.10 U
37324-23-5	Aroclor 1262	0.10	< 0.10 U

Reported in µg/L (ppb)

PCB Surrogate Recovery

Decachlorobiphenyl	91.5%
Tetrachlorometaxylene	64.0%

ANALYTICAL RESOURCES INCORPORATED

ORGANICS ANALYSIS DATA SHEET
PCB by GC/ECD Method SW8082

Sample ID: NBF-DTS-B-100411
SAMPLE

Lab Sample ID: TP92B
LIMS ID: 11-22231
Matrix: Water
Data Release Authorized:
Reported: 10/06/11

QC Report No: TP92-The Boeing Company
Project: NBF-DTS
025082.311.001
Date Sampled: 10/04/11
Date Received: 10/04/11

Date Extracted: 10/05/11
Date Analyzed: 10/05/11 19:59
Instrument/Analyst: ECD7/AAR
GPC Cleanup: No
Sulfur Cleanup: Yes

Sample Amount: 500 mL
Final Extract Volume: 1.0 mL
Dilution Factor: 1.00
Silica Gel: No
Acid Cleanup: Yes

CAS Number	Analyte	RL	Result
12674-11-2	Aroclor 1016	0.10	< 0.10 U
53469-21-9	Aroclor 1242	0.10	< 0.10 U
12672-29-6	Aroclor 1248	0.10	< 0.10 U
11097-69-1	Aroclor 1254	0.10	< 0.10 U
11096-82-5	Aroclor 1260	0.10	< 0.10 U
11104-28-2	Aroclor 1221	0.10	< 0.10 U
11141-16-5	Aroclor 1232	0.10	< 0.10 U
37324-23-5	Aroclor 1262	0.10	< 0.10 U

Reported in µg/L (ppb)

PCB Surrogate Recovery

Decachlorobiphenyl	90.0%
Tetrachlorometaxylene	60.8%

ANALYTICAL RESOURCES INCORPORATED

ORGANICS ANALYSIS DATA SHEET
PCB by GC/ECD Method SW8082

Sample ID: MB-100511
METHOD BLANK

Lab Sample ID: MB-100511
LIMS ID: 11-22230
Matrix: Water
Data Release Authorized: MW
Reported: 10/06/11

QC Report No: TP92-The Boeing Company
Project: NBF-DTS
025082.311.001
Date Sampled: NA
Date Received: NA

Date Extracted: 10/05/11
Date Analyzed: 10/05/11 18:05
Instrument/Analyst: ECD7/AAR
GPC Cleanup: No
Sulfur Cleanup: Yes

Sample Amount: 500 mL
Final Extract Volume: 1.0 mL
Dilution Factor: 1.00
Silica Gel: No
Acid Cleanup: Yes

CAS Number	Analyte	RL	Result
12674-11-2	Aroclor 1016	0.10	< 0.10 U
53469-21-9	Aroclor 1242	0.10	< 0.10 U
12672-29-6	Aroclor 1248	0.10	< 0.10 U
11097-69-1	Aroclor 1254	0.10	< 0.10 U
11096-82-5	Aroclor 1260	0.10	< 0.10 U
11104-28-2	Aroclor 1221	0.10	< 0.10 U
11141-16-5	Aroclor 1232	0.10	< 0.10 U
37324-23-5	Aroclor 1262	0.10	< 0.10 U

Reported in µg/L (ppb)

PCB Surrogate Recovery

Decachlorobiphenyl	99.2%
Tetrachlorometaxylene	59.5%

ANALYTICAL RESOURCES INCORPORATED

SW8082/PCB WATER SURROGATE RECOVERY SUMMARY

Matrix: Water

QC Report No: TP92-The Boeing Company
Project: NBF-DTS
025082.311.001

Client ID	DCBP % REC	DCBP LCL-UCL	TCMX % REC	TCMX LCL-UCL	TOT OUT
MB-100511	99.2%	39-116	59.5%	29-100	0
LCS-100511	89.8%	39-116	52.2%	29-100	0
LCSD-100511	97.2%	39-116	57.8%	29-100	0
NBF-DTS-A-100411	91.5%	10-128	64.0%	25-100	0
NBF-DTS-B-100411	90.0%	10-128	60.8%	25-100	0

Prep Method: SW3510C
Log Number Range: 11-22230 to 11-22231

FORM-II SW8082

ANALYTICAL RESOURCES INCORPORATED

ORGANICS ANALYSIS DATA SHEET
PCB by GC/ECD Method SW8082

Sample ID: LCS-100511
LCS/LCSD

Lab Sample ID: LCS-100511
LIMS ID: 11-22230
Matrix: Water
Data Release Authorized:
Reported: 10/06/11

QC Report No: TP92-The Boeing Company
Project: NBF-DTS
025082.311.001
Date Sampled: NA
Date Received: NA

Date Extracted LCS/LCSD: 10/05/11

Date Analyzed LCS: 10/05/11 18:27
LCSD: 10/05/11 18:50
Instrument/Analyst LCS: ECD7/AAR
LCSD: ECD7/AAR
GPC Cleanup: No
Sulfur Cleanup: Yes

Sample Amount LCS: 500 mL
LCSD: 500 mL
Final Extract Volume LCS: 1.0 mL
LCSD: 1.0 mL
Dilution Factor LCS: 1.00
LCSD: 1.00
Silica Gel: No
Acid Cleanup: Yes

Analyte	LCS	Spike Added-LCS	LCS Recovery	LCSD	Spike Added-LCSD	LCSD Recovery	RPD
Aroclor 1016	0.609	1.00	60.9%	0.705	1.00	70.5%	14.6%
Aroclor 1260	0.794	1.00	79.4%	0.894	1.00	89.4%	11.8%

PCB Surrogate Recovery

	LCS	LCSD
Decachlorobiphenyl	89.8%	97.2%
Tetrachlorometaxylene	52.2%	57.8%

Results reported in µg/L
RPD calculated using sample concentrations per SW846.

Analytical Resources, Incorporated
Analytical Chemists and Consultants

October 16, 2011

Jeremy Davis
Landau Associates, Inc.
130 Second Ave
Edmonds, WA 98020

RE: Project: NBF – DTS 025.082.311.001
ARI Job: TR24

Dear Jeremy:

Please find enclosed the Chain of Custody (COC) record, sample receipt documentation, and analytical results for the above referenced project. Analytical Resources, Inc. (ARI) accepted two water samples in good condition on October 11, 2011. One cooler was received with a temperature of 4.6°C.
Six bottles were received for Oil and Grease analysis and three bottles each sample were composited per Landau Associates.

The samples were analyzed for PCBs and Oil and Grease, as requested on the COC.

There were no irregularities with the samples.

Quality control analysis results are included for your review. Copies of the reports and all associated raw data will be kept on file electronically at ARI. If you have any questions or require additional information, please contact me at your convenience.

Sincerely,
ANALYTICAL RESOURCES, INC

Kelly Bottem
Client Services Manager
(206) 695-6211
kellyb@arilabs.com
www.arilabs.com

cc: Carl Bach, The Boeing Company, P.O. Box 3707, M/S 1W-12, Seattle, WA 98124-2207

4611 South 134th Place, Suite 100 • Tukwila WA 98168 • **206-695-6200** • **206-695-6201** fax

☒ Seattle/Edmonds (425) 778-0907
☐ Tacoma (253) 926-2493
☐ Spokane (509) 327-9737
☐ Portland (503) 542-1080
☐ _____

LANDAU ASSOCIATES

TR24

Chain-of-Custody Record

Date 10/11/11 (DP)

Page 1 of 1

Project Name NORTH BEACH PILOT - DTS Project No. 025082.311

Project Location/Event SEATTLE, WA / WEEKLY DTS SAMPLE

Sampler's Name DYLAN FRAZER

Project Contact JEREMY DAVIS, CARL BATH, JOE KALMAR

Send Results To JEREMY DAVIS, CARL BATH, JOE KALMAR

Testing Parameters

Turnaround Time
☐ Standard
☐ Accelerated
☒ 72 HR

Sample I.D.	Date	Time	Matrix	No. of Containers	FOG	Mbs (MTCA)										
NBF-DTS-A-101111	10/11/11	1310	H_2O	5*	X	X										
NBF-DTS-B-101111	10/11/11	1312	H_2O	5**	X	X										

Observations/Comments

~~X Allow water samples to settle, collect aliquot from clear portion~~ NH

~~X NWTPH-Dx - run acid wash/silica gel cleanup~~

___ run samples standardized to _____ product

___ Analyze for EPH if no specific product identified

VOC/BTEX/VPH (soil):
___ non-preserved
___ preserved w/methanol
___ preserved w/sodium bisulfate
___ Freeze upon receipt

___ Dissolved metal water samples field filtered

Other FOG TIMES:
* 1310, 1315, 1320
** 1312, 1317, 1322

Special Shipment/Handling or Storage Requirements ON ICE

Method of Shipment DROP OFF AT ARI

Relinquished by	Received by	Relinquished by	Received by
Signature [signature]	Signature [signature]	Signature	Signature
Printed Name DYLAN FRAZER	Printed Name Taylor Streeter	Printed Name	Printed Name
Company LANDAU	Company ARI	Company	Company
Date 10/11/11 Time 1650	Date 10-11-11 Time 16 50	Date ____ Time ____	Date ____ Time ____

WHITE COPY - Project File YELLOW COPY - Laboratory PINK COPY - Client Representative

Rev 8/09

Analytical Resources, Incorporated
Analytical Chemists and Consultants

Cooler Receipt Form

ARI Client: Boeing

Project Name: NBF-DTS

COC No(s): _____ NA

Delivered by: Fed-Ex UPS Courier Hand Delivered Other: _____

Assigned ARI Job No. TR24

Tracking No: _____ NA

Preliminary Examination Phase:

Were intact, properly signed and dated custody seals attached to the outside of to cooler? YES NO

Were custody papers included with the cooler? YES NO

Were custody papers properly filled out (ink, signed, etc) YES NO

Temperature of Cooler(s) (°C) (recommended 2.0-6.0 °C for chemistry): 4.1.6

If cooler temperature is out of compliance fill out form 00070F

Temp Gun ID#: 90941619

Cooler Accepted by: TS Date: 10-11-11 Time: 1650

Complete custody forms and attach all shipping documents

Log-In Phase:

Was a temperature blank included in the cooler? YES NO

What kind of packing material was used? Bubble Wrap Wet Ice Gel Packs Baggies Foam Block Paper Other: _____

Was sufficient ice used (if appropriate)? NA YES NO

Were all bottles sealed in individual plastic bags? YES NO

Did all bottles arrive in good condition (unbroken)? YES NO

Were all bottle labels complete and legible? YES NO

Did the number of containers listed on COC match with the number of containers received? YES NO

Did all bottle labels and tags agree with custody papers? YES NO

Were all bottles used correct for the requested analyses? YES NO

Do any of the analyses (bottles) require preservation? (attach preservation sheet, excluding VOCs) NA YES NO

Were all VOC vials free of air bubbles? NA YES NO

Was sufficient amount of sample sent in each bottle? YES NO

Date VOC Trip Blank was made at ARI: NA _____

Was Sample Split by ARI NA YES Date/Time _____ Equipment _____ Split by: _____

Samples Logged by: TS Date: 10-11-11 Time: 1802

***** Notify Project Manager of discrepancies or concerns *****

Sample ID on Bottle	Sample ID on COC	Sample ID on Bottle	Sample ID on COC

Additional Notes, Discrepancies, & Resolutions:

By Date

Small Air Bubbles <2mm	Peabubbles 2-4 mm	LARGE Air Bubbles > 4 mm	
			Small → "sm"
			Peabubbles → "pb"
			Large → "lg"
			Headspace → "hs"

Sample ID Cross Reference Report

ANALYTICAL RESOURCES INCORPORATED

ARI Job No: TR24
Client: The Boeing Company
Project Event: 025082.311
Project Name: North Boeing Field- DTS

	Sample ID	ARI Lab ID	ARI LIMS ID	Matrix	Sample Date/Time	VTSR
1.	NBF-DTS-A-101111	TR24A	11-23154	Water	10/11/11 13:10	10/11/11 16:50
2.	NBF-DTS-B-101111	TR24B	11-23155	Water	10/11/11 13:12	10/11/11 16:50

Printed 10/11/11

PRESERVATION VERIFICATION 10/11/11

ANALYTICAL RESOURCES INCORPORATED

ARI Job No: **TR24**

PC: Kelly
VTSR: 10/11/11

Inquiry Number: NONE
Analysis Requested: 10/12/11
Contact: Bach,Carl
Client: The Boeing Company
Logged by: TS
Sample Set Used: Yes-481
Validatable Package: No
Deliverables:

Project #: 025082.311
Project: North Boeing Field- DTS
Sample Site:
SDG No:
Analytical Protocol: In-house

LOGNUM ARI ID	CLIENT ID	CN >12	WAD >12	NH3 <2	COD <2	FOG <2	MET <2	PHEN <2	PHOS <2	TKN <2	NO23 <2	TOC <2	S2 >9	AK102 <2	Fe2+ <2	DMET FLT	DOC FLT	PARAMETER	ADJUSTED TO	LOT NUMBER	AMOUNT ADDED	DATE/BY
11-23154 **TR24A**	NBF-DTS-A-101111					pass																
11-23155 **TR24B**	NBF-DTS-B-101111					pass																

Checked By TS Date 10-11-11

ANALYTICAL RESOURCES INCORPORATED

ORGANICS ANALYSIS DATA SHEET
PCB by GC/ECD Method SW8082

Sample ID: NBF-DTS-A-101111
SAMPLE

Lab Sample ID: TR24A
LIMS ID: 11-23154
Matrix: Water
Data Release Authorized: MW
Reported: 10/14/11

QC Report No: TR24-The Boeing Company
Project: North Boeing Field- DTS 025082.311
Date Sampled: 10/11/11
Date Received: 10/11/11

Date Extracted: 10/12/11
Date Analyzed: 10/13/11 21:01
Instrument/Analyst: ECD7/JGR
GPC Cleanup: No
Sulfur Cleanup: Yes

Sample Amount: 500 mL
Final Extract Volume: 1.0 mL
Dilution Factor: 1.00
Silica Gel: No
Acid Cleanup: Yes

CAS Number	Analyte	RL	Result
12674-11-2	Aroclor 1016	0.10	< 0.10 U
53469-21-9	Aroclor 1242	0.10	< 0.10 U
12672-29-6	Aroclor 1248	0.10	< 0.10 U
11097-69-1	Aroclor 1254	0.10	< 0.10 U
11096-82-5	Aroclor 1260	0.10	< 0.10 U
11104-28-2	Aroclor 1221	0.10	< 0.10 U
11141-16-5	Aroclor 1232	0.10	< 0.10 U
37324-23-5	Aroclor 1262	0.10	< 0.10 U

Reported in µg/L (ppb)

PCB Surrogate Recovery

Decachlorobiphenyl	94.8%
Tetrachlorometaxylene	67.2%

ANALYTICAL RESOURCES INCORPORATED

ORGANICS ANALYSIS DATA SHEET
PCB by GC/ECD Method SW8082

Sample ID: NBF-DTS-B-101111
SAMPLE

Lab Sample ID: TR24B
LIMS ID: 11-23155
Matrix: Water
Data Release Authorized:
Reported: 10/14/11

QC Report No: TR24-The Boeing Company
Project: North Boeing Field- DTS 025082.311
Date Sampled: 10/11/11
Date Received: 10/11/11

Date Extracted: 10/12/11
Date Analyzed: 10/13/11 21:24
Instrument/Analyst: ECD7/JGR
GPC Cleanup: No
Sulfur Cleanup: Yes

Sample Amount: 500 mL
Final Extract Volume: 1.0 mL
Dilution Factor: 1.00
Silica Gel: No
Acid Cleanup: Yes

CAS Number	Analyte	RL	Result
12674-11-2	Aroclor 1016	0.10	< 0.10 U
53469-21-9	Aroclor 1242	0.10	< 0.10 U
12672-29-6	Aroclor 1248	0.10	< 0.10 U
11097-69-1	Aroclor 1254	0.10	< 0.10 U
11096-82-5	Aroclor 1260	0.10	< 0.10 U
11104-28-2	Aroclor 1221	0.10	< 0.10 U
11141-16-5	Aroclor 1232	0.10	< 0.10 U
37324-23-5	Aroclor 1262	0.10	< 0.10 U

Reported in µg/L (ppb)

PCB Surrogate Recovery	
Decachlorobiphenyl	84.8%
Tetrachlorometaxylene	60.8%

ANALYTICAL RESOURCES INCORPORATED

ORGANICS ANALYSIS DATA SHEET
PCB by GC/ECD Method SW8082

Sample ID: MB-101211
METHOD BLANK

Lab Sample ID: MB-101211
LIMS ID: 11-23154
Matrix: Water
Data Release Authorized: MW
Reported: 10/14/11

QC Report No: TR24-The Boeing Company
Project: North Boeing Field- DTS 025082.311
Date Sampled: NA
Date Received: NA

Date Extracted: 10/12/11
Date Analyzed: 10/13/11 19:52
Instrument/Analyst: ECD7/JGR
GPC Cleanup: No
Sulfur Cleanup: Yes

Sample Amount: 500 mL
Final Extract Volume: 1.0 mL
Dilution Factor: 1.00
Silica Gel: No
Acid Cleanup: Yes

CAS Number	Analyte	RL	Result
12674-11-2	Aroclor 1016	0.10	< 0.10 U
53469-21-9	Aroclor 1242	0.10	< 0.10 U
12672-29-6	Aroclor 1248	0.10	< 0.10 U
11097-69-1	Aroclor 1254	0.10	< 0.10 U
11096-82-5	Aroclor 1260	0.10	< 0.10 U
11104-28-2	Aroclor 1221	0.10	< 0.10 U
11141-16-5	Aroclor 1232	0.10	< 0.10 U
37324-23-5	Aroclor 1262	0.10	< 0.10 U

Reported in µg/L (ppb)

PCB Surrogate Recovery

Decachlorobiphenyl	93.2%
Tetrachlorometaxylene	61.8%

ANALYTICAL RESOURCES INCORPORATED

SW8082/PCB WATER SURROGATE RECOVERY SUMMARY

Matrix: Water

QC Report No: TR24-The Boeing Company
Project: North Boeing Field- DTS 025082.311

Client ID	DCBP % REC	DCBP LCL-UCL	TCMX % REC	TCMX LCL-UCL	TOT OUT
MB-101211	93.2%	39-116	61.8%	29-100	0
LCS-101211	97.8%	39-116	63.5%	29-100	0
LCSD-101211	92.8%	39-116	62.5%	29-100	0
NBF-DTS-A-101111	94.8%	10-128	67.2%	25-100	0
NBF-DTS-B-101111	84.8%	10-128	60.8%	25-100	0

Prep Method: SW3510C
Log Number Range: 11-23154 to 11-23155

FORM-II SW8082

ANALYTICAL RESOURCES INCORPORATED

ORGANICS ANALYSIS DATA SHEET
PCB by GC/ECD Method SW8082

Sample ID: LCS-101211
LCS/LCSD

Lab Sample ID: LCS-101211
LIMS ID: 11-23154
Matrix: Water
Data Release Authorized:
Reported: 10/14/11

QC Report No: TR24-The Boeing Company
Project: North Boeing Field- DTS 025082.311
Date Sampled: NA
Date Received: NA

Date Extracted LCS/LCSD: 10/12/11

Date Analyzed LCS: 10/13/11 20:15
LCSD: 10/13/11 20:38
Instrument/Analyst LCS: ECD7/JGR
LCSD: ECD7/JGR
GPC Cleanup: No
Sulfur Cleanup: Yes

Sample Amount LCS: 500 mL
LCSD: 500 mL
Final Extract Volume LCS: 1.0 mL
LCSD: 1.0 mL
Dilution Factor LCS: 1.00
LCSD: 1.00
Silica Gel: No
Acid Cleanup: Yes

Analyte	LCS	Spike Added-LCS	LCS Recovery	LCSD	Spike Added-LCSD	LCSD Recovery	RPD
Aroclor 1016	0.779	1.00	77.9%	0.786	1.00	78.6%	0.9%
Aroclor 1260	0.883	1.00	88.3%	0.854	1.00	85.4%	3.3%

PCB Surrogate Recovery

	LCS	LCSD
Decachlorobiphenyl	97.8%	92.8%
Tetrachlorometaxylene	63.5%	62.5%

Results reported in µg/L
RPD calculated using sample concentrations per SW846.

SAMPLE RESULTS-CONVENTIONALS
TR24-The Boeing Company

ANALYTICAL RESOURCES INCORPORATED

Matrix: Water
Data Release Authorized: JMB
Reported: 10/14/11

Project: North Boeing Field- DTS
Event: 025082.311
Date Sampled: 10/11/11
Date Received: 10/11/11

Client ID: NBF-DTS-A-101111
ARI ID: 11-23154 TR24A

Analyte	Date Batch	Method	Units	RL	Sample
HEM Oil & Grease	10/14/11 101411#1	EPA 1664A	mg/L	3.4	< 3.4 U
HEM-SGT NP Oil & Grease	10/14/11 101411#1	EPA 1664A	mg/L	3.4	< 3.4 U
HEM Polar Oil & Grease	10/14/11	EPA 1664A	mg/L	3.4	< 3.4 U

RL Analytical reporting limit
U Undetected at reported detection limit

SAMPLE RESULTS-CONVENTIONALS
TR24-The Boeing Company

ANALYTICAL RESOURCES INCORPORATED

Matrix: Water
Data Release Authorized: MB
Reported: 10/14/11

Project: North Boeing Field- DTS
Event: 025082.311
Date Sampled: 10/11/11
Date Received: 10/11/11

Client ID: NBF-DTS-B-101111
ARI ID: 11-23155 TR24B

Analyte	Date Batch	Method	Units	RL	Sample
HEM Oil & Grease	10/14/11 101411#1	EPA 1664A	mg/L	3.3	< 3.3 U
HEM-SGT NP Oil & Grease	10/14/11 101411#1	EPA 1664A	mg/L	3.3	< 3.3 U
HEM Polar Oil & Grease	10/14/11	EPA 1664A	mg/L	3.3	< 3.3 U

RL Analytical reporting limit
U Undetected at reported detection limit

METHOD BLANK RESULTS-CONVENTIONALS
TR24-The Boeing Company

ANALYTICAL RESOURCES INCORPORATED

Matrix: Water
Data Release Authorized:
Reported: 10/14/11

Project: North Boeing Field- DTS
Event: 025082.311
Date Sampled: NA
Date Received: NA

Analyte	Method	Date	Units	Blank	ID
HEM Oil & Grease	EPA 1664A	10/14/11	mg/L	< 5.0 U	
HEM-SGT NP Oil & Grease	EPA 1664A	10/14/11	mg/L	< 5.0 U	
HEM Polar Oil & Grease	EPA 1664A	10/14/11	mg/L	< 5.0 U	

LAB CONTROL RESULTS-CONVENTIONALS
TR24-The Boeing Company

ANALYTICAL RESOURCES INCORPORATED

Matrix: Water
Data Release Authorized:
Reported: 10/14/11

Project: North Boeing Field- DTS
Event: 025082.311
Date Sampled: NA
Date Received: NA

Analyte/Method	QC ID	Date	Units	LCS	Spike Added	Recovery
HEM Oil & Grease EPA 1664A	ICVL	10/14/11	mg/L	39.6	40.1	98.8%

Analytical Resources, Incorporated
Analytical Chemists and Consultants

October 20, 2011

Jeremy Davis
Landau Associates, Inc.
130 Second Ave
Edmonds, WA 98020

RE: Project: NBF – DTS 025082.311.001
ARI Job: TS44

Dear Jeremy:

Please find enclosed the Chain of Custody (COC) record, sample receipt documentation, and analytical results for the above referenced project. Analytical Resources, Inc. (ARI) accepted two water samples in good condition on October 18, 2011. One cooler was received with a temperature of 11.4°C.

The samples were analyzed for PCBs, as requested on the COC.

There were no irregularities with the samples.

Quality control analysis results are included for your review. Copies of the reports and all associated raw data will be kept on file electronically at ARI. If you have any questions or require additional information, please contact me at your convenience.

Sincerely,
ANALYTICAL RESOURCES, INC

Kelly Bottem
Client Services Manager
(206) 695-6211
kellyb@arilabs.com
www.arilabs.com

cc: Carl Bach, The Boeing Company, P.O. Box 3707, M/S 1W-12, Seattle, WA 98124-2207

4611 South 134th Place, Suite 100 • Tukwila WA 98168 • **206-695-6200** • **206-695-6201** fax

☒ Seattle/Edmonds (425) 778-0907
☐ Tacoma (253) 926-2493
☐ Spokane (509) 327-9737
☐ Portland (503) 542-1080
☐ _____

LANDAU ASSOCIATES

TS44

Chain-of-Custody Record

Date 10/18/11
Page 1 of 1

Project Name: North Boeing Field DTS
Project No.: 025082.311
Project Location/Event: Seattle, WA / Weekly DTS Sampling
Sampler's Name: Dylan Frazer
Project Contact: Jeremy Davis
Send Results To: _____

Turnaround Time
☐ Standard
☐ Accelerated
☒ 72 HR

Testing Parameters

Sample I.D.	Date	Time	Matrix	No. of Containers	PCBs (ANCA)
NBF-DTS-A-101811	10/18/11	1055	H_2O	2	X
NBF-DTS-B-101811	10/18/11	1105	H_2O	2	X

Observations/Comments

~~X Allow water samples to settle, collect aliquot from clear portion~~ DHZ

~~X NWTPH-Dx - run acid wash/silica gel cleanup~~

___ run samples standardized to _____ product

___ Analyze for EPH if no specific product identified

VOC/BTEX/VPH (soil):
___ non-preserved
___ preserved w/methanol
___ preserved w/sodium bisulfate
___ Freeze upon receipt

___ Dissolved metal water samples field filtered

Other _____

Special Shipment/Handling or Storage Requirements: ON ICE

Method of Shipment: Drop off

Relinquished by	Received by	Relinquished by	Received by
Signature: [signature]	Signature: [signature]	Signature:	Signature:
Printed Name: Dylan Frazer	Printed Name: Taylor Streeter	Printed Name:	Printed Name:
Company: Landau	Company: PRI	Company:	Company:
Date: 10/18/11 Time: 1210	Date: 10-18-11 Time: 1210	Date: Time:	Date: Time:

WHITE COPY - Project File YELLOW COPY - Laboratory PINK COPY - Client Representative

Rev 8/09

Analytical Resources, Incorporated
Analytical Chemists and Consultants

Cooler Receipt Form

ARI Client: Boeing

Project Name: NBF DTS

COC No(s): _____ (NA)

Delivered by: Fed-Ex UPS Courier Hand Delivered Other: _____

Assigned ARI Job No: TS44

Tracking No: _____ (NA)

Preliminary Examination Phase:

Were intact, properly signed and dated custody seals attached to the outside of to cooler?	YES	(NO)
Were custody papers included with the cooler?	(YES)	NO
Were custody papers properly filled out (ink, signed, etc.)	(YES)	NO

Temperature of Cooler(s) (°C) (recommended 2.0-6.0 °C for chemistry)..... 11.4 ____ ____ ____ ____ ____

If cooler temperature is out of compliance fill out form 00070F

Temp Gun ID#: 90911619

Cooler Accepted by: TS Date: 10-18-11 Time: 1210

Complete custody forms and attach all shipping documents

Log-In Phase:

Was a temperature blank included in the cooler?		YES	(NO)
What kind of packing material was used? ... Bubble Wrap (Wet Ice) Gel Packs Baggies Foam Block Paper Other: _____			
Was sufficient ice used (if appropriate)?	NA	(YES)	NO
Were all bottles sealed in individual plastic bags?		YES	(NO)
Did all bottles arrive in good condition (unbroken)?		(YES)	NO
Were all bottle labels complete and legible?		(YES)	NO
Did the number of containers listed on COC match with the number of containers received?		(YES)	NO
Did all bottle labels and tags agree with custody papers?		(YES)	NO
Were all bottles used correct for the requested analyses?		(YES)	NO
Do any of the analyses (bottles) require preservation? (attach preservation sheet, excluding VOCs)...	(NA)	YES	NO
Were all VOC vials free of air bubbles?	(NA)	YES	NO
Was sufficient amount of sample sent in each bottle?		(YES)	NO
Date VOC Trip Blank was made at ARI	(NA)		

Was Sample Split by ARI : (NA) YES Date/Time: _____ Equipment: _____ Split by: _____

Samples Logged by: ~~TS~~ AV Date: 10-18-11 Time: ~~1210~~ 1220

***** Notify Project Manager of discrepancies or concerns *****

Sample ID on Bottle	Sample ID on COC	Sample ID on Bottle	Sample ID on COC

Additional Notes, Discrepancies, & Resolutions:

By: Date:

Small → "sm"	
Peabubbles → "pb"	
Large → "lg"	
Headspace → "hs"	

Analytical Resources, Incorporated
Analytical Chemists and Consultants

Cooler Temperature Compliance Form

TS44

Cooler#: 1 Temperature(°C): 11.4

Sample ID	Bottle Count	Bottle Type
All Samples arrived above 6°C.		

Cooler#: Temperature(°C):

Sample ID	Bottle Count	Bottle Type

Cooler#: Temperature(°C):

Sample ID	Bottle Count	Bottle Type

Cooler#: Temperature(°C):

Sample ID	Bottle Count	Bottle Type

Completed by: AV Date: 10/18/11 Time: 1220

Sample ID Cross Reference Report

ANALYTICAL RESOURCES INCORPORATED

ARI Job No: TS44
Client: The Boeing Company
Project Event: 025082.311
Project Name: North Boeing Field DTS

	Sample ID	ARI Lab ID	ARI LIMS ID	Matrix	Sample Date/Time	VTSR
1.	NBF-DTS-A-101811	TS44A	11-23725	Water	10/18/11 10:55	10/18/11 12:10
2.	NBF-DTS-B-101811	TS44B	11-23726	Water	10/18/11 11:05	10/18/11 12:10

Printed 10/18/11

ANALYTICAL RESOURCES INCORPORATED

ORGANICS ANALYSIS DATA SHEET
PCB by GC/ECD Method SW8082

Sample ID: NBF-DTS-A-101811
SAMPLE

Lab Sample ID: TS44A
LIMS ID: 11-23725
Matrix: Water
Data Release Authorized: MW
Reported: 10/20/11

QC Report No: TS44-The Boeing Company
Project: North Boeing Field DTS 025082.311
Date Sampled: 10/18/11
Date Received: 10/18/11

Date Extracted: 10/18/11
Date Analyzed: 10/19/11 14:46
Instrument/Analyst: ECD5/AAR
GPC Cleanup: No
Sulfur Cleanup: Yes

Sample Amount: 500 mL
Final Extract Volume: 1.0 mL
Dilution Factor: 1.00
Silica Gel: No
Acid Cleanup: Yes

CAS Number	Analyte	RL	Result
12674-11-2	Aroclor 1016	0.10	< 0.10 U
53469-21-9	Aroclor 1242	0.10	< 0.10 U
12672-29-6	Aroclor 1248	0.10	< 0.10 U
11097-69-1	Aroclor 1254	0.10	< 0.10 U
11096-82-5	Aroclor 1260	0.10	< 0.10 U
11104-28-2	Aroclor 1221	0.10	< 0.10 U
11141-16-5	Aroclor 1232	0.10	< 0.10 U
37324-23-5	Aroclor 1262	0.10	< 0.10 U

Reported in µg/L (ppb)

PCB Surrogate Recovery

Decachlorobiphenyl	98.2%
Tetrachlorometaxylene	70.0%

ANALYTICAL RESOURCES INCORPORATED

ORGANICS ANALYSIS DATA SHEET
PCB by GC/ECD Method SW8082

Sample ID: NBF-DTS-B-101811
SAMPLE

Lab Sample ID: TS44B
LIMS ID: 11-23726
Matrix: Water
Data Release Authorized: MW
Reported: 10/20/11

QC Report No: TS44-The Boeing Company
Project: North Boeing Field DTS 025082.311
Date Sampled: 10/18/11
Date Received: 10/18/11

Date Extracted: 10/18/11
Date Analyzed: 10/19/11 15:05
Instrument/Analyst: ECD5/AAR
GPC Cleanup: No
Sulfur Cleanup: Yes

Sample Amount: 500 mL
Final Extract Volume: 1.0 mL
Dilution Factor: 1.00
Silica Gel: No
Acid Cleanup: Yes

CAS Number	Analyte	RL	Result
12674-11-2	Aroclor 1016	0.10	< 0.10 U
53469-21-9	Aroclor 1242	0.10	< 0.10 U
12672-29-6	Aroclor 1248	0.10	< 0.10 U
11097-69-1	Aroclor 1254	0.10	< 0.10 U
11096-82-5	Aroclor 1260	0.10	< 0.10 U
11104-28-2	Aroclor 1221	0.10	< 0.10 U
11141-16-5	Aroclor 1232	0.10	< 0.10 U
37324-23-5	Aroclor 1262	0.10	< 0.10 U

Reported in µg/L (ppb)

PCB Surrogate Recovery

Decachlorobiphenyl	79.2%
Tetrachlorometaxylene	69.8%

ANALYTICAL RESOURCES INCORPORATED

ORGANICS ANALYSIS DATA SHEET
PCB by GC/ECD Method SW8082

Sample ID: MB-101811
METHOD BLANK

Lab Sample ID: MB-101811
LIMS ID: 11-23725
Matrix: Water
Data Release Authorized: MW
Reported: 10/20/11

QC Report No: TS44-The Boeing Company
Project: North Boeing Field DTS 025082.311
Date Sampled: NA
Date Received: NA

Date Extracted: 10/18/11
Date Analyzed: 10/19/11 13:49
Instrument/Analyst: ECD5/AAR
GPC Cleanup: No
Sulfur Cleanup: Yes

Sample Amount: 500 mL
Final Extract Volume: 1.0 mL
Dilution Factor: 1.00
Silica Gel: No
Acid Cleanup: Yes

CAS Number	Analyte	RL	Result
12674-11-2	Aroclor 1016	0.10	< 0.10 U
53469-21-9	Aroclor 1242	0.10	< 0.10 U
12672-29-6	Aroclor 1248	0.10	< 0.10 U
11097-69-1	Aroclor 1254	0.10	< 0.10 U
11096-82-5	Aroclor 1260	0.10	< 0.10 U
11104-28-2	Aroclor 1221	0.10	< 0.10 U
11141-16-5	Aroclor 1232	0.10	< 0.10 U
37324-23-5	Aroclor 1262	0.10	< 0.10 U

Reported in µg/L (ppb)

PCB Surrogate Recovery

Decachlorobiphenyl	70.8%
Tetrachlorometaxylene	54.2%

ANALYTICAL RESOURCES INCORPORATED

SW8082/PCB WATER SURROGATE RECOVERY SUMMARY

Matrix: Water

QC Report No: TS44-The Boeing Company
Project: North Boeing Field DTS
025082.311

Client ID	DCBP % REC	DCBP LCL-UCL	TCMX % REC	TCMX LCL-UCL	TOT OUT
MB-101811	70.8%	39-116	54.2%	29-100	0
LCS-101811	73.8%	39-116	57.8%	29-100	0
LCSD-101811	75.0%	39-116	54.2%	29-100	0
NBF-DTS-A-101811	98.2%	10-128	70.0%	25-100	0
NBF-DTS-B-101811	79.2%	10-128	69.8%	25-100	0

Prep Method: SW3510C
Log Number Range: 11-23725 to 11-23726

FORM-II SW8082

ANALYTICAL RESOURCES INCORPORATED

ORGANICS ANALYSIS DATA SHEET
PCB by GC/ECD Method SW8082

Sample ID: LCS-101811
LCS/LCSD

Lab Sample ID: LCS-101811
LIMS ID: 11-23725
Matrix: Water
Data Release Authorized: MW
Reported: 10/20/11

QC Report No: TS44-The Boeing Company
Project: North Boeing Field DTS 025082.311
Date Sampled: NA
Date Received: NA

Date Extracted LCS/LCSD: 10/18/11

Date Analyzed LCS: 10/19/11 14:08
LCSD: 10/19/11 14:27
Instrument/Analyst LCS: ECD5/AAR
LCSD: ECD5/AAR
GPC Cleanup: No
Sulfur Cleanup: Yes

Sample Amount LCS: 500 mL
LCSD: 500 mL
Final Extract Volume LCS: 1.0 mL
LCSD: 1.0 mL
Dilution Factor LCS: 1.00
LCSD: 1.00
Silica Gel: No
Acid Cleanup: Yes

Analyte	LCS	Spike Added-LCS	LCS Recovery	LCSD	Spike Added-LCSD	LCSD Recovery	RPD
Aroclor 1016	0.660	1.00	66.0%	0.645	1.00	64.5%	2.3%
Aroclor 1260	0.766	1.00	76.6%	0.780	1.00	78.0%	1.8%

PCB Surrogate Recovery

	LCS	LCSD
Decachlorobiphenyl	73.8%	75.0%
Tetrachlorometaxylene	57.8%	54.2%

Results reported in µg/L
RPD calculated using sample concentrations per SW846.

Analytical Resources, Incorporated
Analytical Chemists and Consultants

October 31, 2011

Jeremy Davis
Landau Associates, Inc.
130 Second Ave
Edmonds, WA 98020

RE: Project: NBF – DTS 025082.311.001
ARI Job: TT82

Dear Jeremy:

Please find enclosed the Chain of Custody (COC) record, sample receipt documentation, and analytical results for the above referenced project. Analytical Resources, Inc. (ARI) accepted two water samples in good condition on October 26, 2011. One cooler was received with a temperature of 7.2°C.

The samples were analyzed for PCBs, as requested on the COC.

There were no irregularities with the samples.

Quality control analysis results are included for your review. Copies of the reports and all associated raw data will be kept on file electronically at ARI. If you have any questions or require additional information, please contact me at your convenience.

Sincerely,
ANALYTICAL RESOURCES, INC

Kelly Bottem
Client Services Manager
(206) 695-6211
kellyb@arilabs.com
www.arilabs.com

cc: Carl Bach, The Boeing Company, P.O. Box 3707, M/S 1W-12, Seattle, WA 98124-2207

4611 South 134th Place, Suite 100 • Tukwila WA 98168 • **206-695-6200** • **206-695-6201** fax

☒ Seattle/Edmonds (425) 778-0907
☐ Tacoma (253) 926-2493
☐ Spokane (509) 327-9737
☐ Portland (503) 542-1080
☐ _____

TT82

LANDAU ASSOCIATES

Chain-of-Custody Record

Date 10/26/11
Page 1 of 1

Project Name NORTH BOEING FIELD DTS Project No. 025082.311
Project Location/Event SEATTLE, WA / WEEKLY DTS SAMPLING
Sampler's Name DYLAN FRAZIER
Project Contact JEREMY DAVIS
Send Results To JEREMY DAVIS, JOE KALNAY, ANNE HANSEN

Testing Parameters

Turnaround Time
☐ Standard
☐ Accelerated
☒ 72 HR

Sample I.D.	Date	Time	Matrix	No. of Containers	PCBs (MTCA)
NBF-DTS-A-102611	10/26/11	1030	H_2O	2	X
NBF-DTS-B-102611	10/26/11	1040	H_2O	2	X

Observations/Comments

~~X Allow water samples to settle, collect aliquot from clear portion~~ DHF

~~X NWTPH-Dx - run acid wash/silica gel cleanup~~

___ run samples standardized to _____ product

___ Analyze for EPH if no specific product identified

VOC/BTEX/VPH (soil):
___ non-preserved
___ preserved w/methanol
___ preserved w/sodium bisulfate
___ Freeze upon receipt

___ Dissolved metal water samples field filtered

Other _____

Special Shipment/Handling or Storage Requirements ON ICE

Method of Shipment DROP OFF

Relinquished by	Received by	Relinquished by	Received by
Signature: [signature]	Signature: [signature]	Signature:	Signature:
Printed Name: DYLAN FRAZIER	Printed Name: A. Volgardsen	Printed Name:	Printed Name:
Company: LANDAU	Company: ARI	Company:	Company:
Date: 10/26/11 Time: 1410	Date: 10/26/11 Time: 1410	Date: Time:	Date: Time:

WHITE COPY - Project File YELLOW COPY - Laboratory PINK COPY - Client Representative

Rev 8/09

Sample ID Cross Reference Report

ANALYTICAL RESOURCES INCORPORATED

ARI Job No: TT82
Client: The Boeing Company
Project Event: 025082.311
Project Name: North Boeing Field DTS

	Sample ID	ARI Lab ID	ARI LIMS ID	Matrix	Sample Date/Time	VTSR
1.	NBF-DTS-A-102611	TT82A	11-24642	Water	10/26/11 10:30	10/26/11 14:10
2.	NBF-DTS-B-102611	TT82B	11-24643	Water	10/26/11 10:40	10/26/11 14:10

Printed 10/26/11

Analytical Resources, Incorporated
Analytical Chemists and Consultants

Cooler Receipt Form

ARI Client: Boeing

COC No(s): _____ (NA)

Assigned ARI Job No: TT82

Project Name: NBF DTS

Delivered by: Fed-Ex UPS Courier Hand Delivered Other: _____

Tracking No: _____ (NA)

Preliminary Examination Phase:

Were intact, properly signed and dated custody seals attached to the outside of to cooler?	YES	NO
Were custody papers included with the cooler?	YES	NO
Were custody papers properly filled out (ink, signed, etc.)	YES	NO
Temperature of Cooler(s) (°C) (recommended 2.0-6.0 °C for chemistry) 7.2		

If cooler temperature is out of compliance fill out form 00070F

Temp Gun ID#: 90941619

Cooler Accepted by: AV Date: 10/26/11 Time: 1410

Complete custody forms and attach all shipping documents

Log-In Phase:

Was a temperature blank included in the cooler?		YES	NO
What kind of packing material was used? ... Bubble Wrap Wet Ice Gel Packs Baggies Foam Block Paper Other: _____			
Was sufficient ice used (if appropriate)?	NA	YES	NO
Were all bottles sealed in individual plastic bags?		YES	NO
Did all bottles arrive in good condition (unbroken)?		YES	NO
Were all bottle labels complete and legible?		YES	NO
Did the number of containers listed on COC match with the number of containers received?		YES	NO
Did all bottle labels and tags agree with custody papers?		YES	NO
Were all bottles used correct for the requested analyses?		YES	NO
Do any of the analyses (bottles) require preservation? (attach preservation sheet, excluding VOCs)...	NA	YES	NO
Were all VOC vials free of air bubbles?	NA	YES	NO
Was sufficient amount of sample sent in each bottle?		YES	NO
Date VOC Trip Blank was made at ARI	NA		

Was Sample Split by ARI : (NA) YES Date/Time: _____ Equipment: _____ Split by: _____

Samples Logged by: AV Date: 10/26/11 Time: 1455

*** Notify Project Manager of discrepancies or concerns ***

Sample ID on Bottle	Sample ID on COC	Sample ID on Bottle	Sample ID on COC

Additional Notes, Discrepancies, & Resolutions:

By: Date:

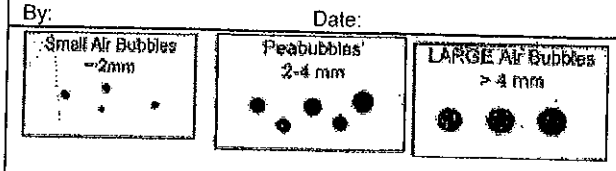

Small → "sm"
Peabubbles → "pb"
Large → "lg"
Headspace → "hs"

Analytical Resources, Incorporated
Analytical Chemists and Consultants

Cooler Temperature Compliance Form

TT82

Cooler#: 1 Temperature(°C): 7.2

Sample ID	Bottle Count	Bottle Type
All samples received above 6°C.		

Cooler#: Temperature(°C):

Sample ID	Bottle Count	Bottle Type

Cooler#: Temperature(°C):

Sample ID	Bottle Count	Bottle Type

Cooler#: Temperature(°C):

Sample ID	Bottle Count	Bottle Type

Completed by: AV Date: 10/26/11 Time: 1530

ANALYTICAL RESOURCES INCORPORATED

ORGANICS ANALYSIS DATA SHEET
PCB by GC/ECD Method SW8082

Sample ID: NBF-DTS-A-102611
SAMPLE

Lab Sample ID: TT82A
LIMS ID: 11-24642
Matrix: Water
Data Release Authorized:
Reported: 10/31/11

QC Report No: TT82-The Boeing Company
Project: North Boeing Field DTS 025082.311
Date Sampled: 10/26/11
Date Received: 10/26/11

Date Extracted: 10/26/11
Date Analyzed: 10/28/11 16:38
Instrument/Analyst: ECD7/AAR
GPC Cleanup: No
Sulfur Cleanup: Yes

Sample Amount: 500 mL
Final Extract Volume: 1.0 mL
Dilution Factor: 1.00
Silica Gel: No
Acid Cleanup: Yes

CAS Number	Analyte	RL	Result
12674-11-2	Aroclor 1016	0.10	< 0.10 U
53469-21-9	Aroclor 1242	0.10	< 0.10 U
12672-29-6	**Aroclor 1248**	**0.10**	**0.30**
11097-69-1	**Aroclor 1254**	**0.10**	**0.19**
11096-82-5	Aroclor 1260	0.10	< 0.10 U
11104-28-2	Aroclor 1221	0.10	< 0.10 U
11141-16-5	Aroclor 1232	0.10	< 0.10 U
37324-23-5	Aroclor 1262	0.10	< 0.10 U

Reported in µg/L (ppb)

PCB Surrogate Recovery

Decachlorobiphenyl	80.2%
Tetrachlorometaxylene	57.0%

ANALYTICAL RESOURCES INCORPORATED

ORGANICS ANALYSIS DATA SHEET
PCB by GC/ECD Method SW8082

Sample ID: NBF-DTS-B-102611
SAMPLE

Lab Sample ID: TT82B
LIMS ID: 11-24643
Matrix: Water
Data Release Authorized:
Reported: 10/31/11

QC Report No: TT82-The Boeing Company
Project: North Boeing Field DTS 025082.311
Date Sampled: 10/26/11
Date Received: 10/26/11

Date Extracted: 10/26/11
Date Analyzed: 10/28/11 17:01
Instrument/Analyst: ECD7/AAR
GPC Cleanup: No
Sulfur Cleanup: Yes

Sample Amount: 500 mL
Final Extract Volume: 1.0 mL
Dilution Factor: 1.00
Silica Gel: No
Acid Cleanup: Yes

CAS Number	Analyte	RL	Result
12674-11-2	Aroclor 1016	0.10	< 0.10 U
53469-21-9	Aroclor 1242	0.10	< 0.10 U
12672-29-6	**Aroclor 1248**	**0.10**	**0.18**
11097-69-1	**Aroclor 1254**	**0.10**	**0.12**
11096-82-5	Aroclor 1260	0.10	< 0.10 U
11104-28-2	Aroclor 1221	0.10	< 0.10 U
11141-16-5	Aroclor 1232	0.10	< 0.10 U
37324-23-5	Aroclor 1262	0.10	< 0.10 U

Reported in µg/L (ppb)

PCB Surrogate Recovery

Decachlorobiphenyl	63.2%
Tetrachlorometaxylene	42.8%

ANALYTICAL RESOURCES INCORPORATED

ORGANICS ANALYSIS DATA SHEET
PCB by GC/ECD Method SW8082

Sample ID: MB-102611
METHOD BLANK

Lab Sample ID: MB-102611
LIMS ID: 11-24642
Matrix: Water
Data Release Authorized:
Reported: 10/31/11

QC Report No: TT82-The Boeing Company
Project: North Boeing Field DTS 025082.311
Date Sampled: NA
Date Received: NA

Date Extracted: 10/26/11
Date Analyzed: 10/28/11 15:29
Instrument/Analyst: ECD7/AAR
GPC Cleanup: No
Sulfur Cleanup: Yes

Sample Amount: 500 mL
Final Extract Volume: 1.0 mL
Dilution Factor: 1.00
Silica Gel: No
Acid Cleanup: Yes

CAS Number	Analyte	RL	Result
12674-11-2	Aroclor 1016	0.10	< 0.10 U
53469-21-9	Aroclor 1242	0.10	< 0.10 U
12672-29-6	Aroclor 1248	0.10	< 0.10 U
11097-69-1	Aroclor 1254	0.10	< 0.10 U
11096-82-5	Aroclor 1260	0.10	< 0.10 U
11104-28-2	Aroclor 1221	0.10	< 0.10 U
11141-16-5	Aroclor 1232	0.10	< 0.10 U
37324-23-5	Aroclor 1262	0.10	< 0.10 U

Reported in µg/L (ppb)

PCB Surrogate Recovery

Decachlorobiphenyl	80.2%
Tetrachlorometaxylene	56.2%

ANALYTICAL RESOURCES INCORPORATED

SW8082/PCB WATER SURROGATE RECOVERY SUMMARY

Matrix: Water

QC Report No: TT82-The Boeing Company
Project: North Boeing Field DTS
025082.311

Client ID	DCBP % REC	DCBP LCL-UCL	TCMX % REC	TCMX LCL-UCL	TOT OUT
MB-102611	80.2%	39-116	56.2%	29-100	0
LCS-102611	83.0%	39-116	55.2%	29-100	0
LCSD-102611	81.5%	39-116	58.5%	29-100	0
NBF-DTS-A-102611	80.2%	10-128	57.0%	25-100	0
NBF-DTS-B-102611	63.2%	10-128	42.8%	25-100	0

Prep Method: SW3510C
Log Number Range: 11-24642 to 11-24643

FORM-II SW8082

ORGANICS ANALYSIS DATA SHEET
PCB by GC/ECD Method SW8082

ANALYTICAL RESOURCES INCORPORATED

Sample ID: LCS-102611
LCS/LCSD

Lab Sample ID: LCS-102611
LIMS ID: 11-24642
Matrix: Water
Data Release Authorized: MW
Reported: 10/31/11

QC Report No: TT82-The Boeing Company
Project: North Boeing Field DTS 025082.311
Date Sampled: NA
Date Received: NA

Date Extracted LCS/LCSD: 10/26/11

Date Analyzed LCS: 10/28/11 15:52
LCSD: 10/28/11 16:15
Instrument/Analyst LCS: ECD7/AAR
LCSD: ECD7/AAR
GPC Cleanup: No
Sulfur Cleanup: Yes

Sample Amount LCS: 500 mL
LCSD: 500 mL
Final Extract Volume LCS: 1.0 mL
LCSD: 1.0 mL
Dilution Factor LCS: 1.00
LCSD: 1.00
Silica Gel: No
Acid Cleanup: Yes

Analyte	LCS	Spike Added-LCS	LCS Recovery	LCSD	Spike Added-LCSD	LCSD Recovery	RPD
Aroclor 1016	0.695	1.00	69.5%	0.707	1.00	70.7%	1.7%
Aroclor 1260	0.798	1.00	79.8%	0.775	1.00	77.5%	2.9%

PCB Surrogate Recovery

	LCS	LCSD
Decachlorobiphenyl	83.0%	81.5%
Tetrachlorometaxylene	55.2%	58.5%

Results reported in µg/L
RPD calculated using sample concentrations per SW846.

Discharge Monitoring Data

TABLE D-1
BOEING COMMERCIAL AIRPLANE - NORTH BOEING FIELD FACILITY
LOCATION: 7500 EAST MARGINAL WAY SOUTH, SEATTLE, WA
DISCHARGE AUTHORIZATION NUMBER: 827-01

SAMPLE DATE	FLOW gal/day	FOG mg/L	pH	Aroclor 1016 ug/L	Aroclor 1242 ug/L	Aroclor 1248 ug/L	Aroclor 1254 ug/L	Aroclor 1260 ug/L	Aroclor 1221 ug/L	Aroclor 1232 ug/L	Aroclor 1262 ug/L	Lab ID#
DAILY LIMIT->	100,000	100	5.5-12	0.27	0.27	0.27	0.27	0.27	0.27	0.27	0.27	
7/1/2011	13,865	-	7.13	<0.1	<0.1	<0.1	<0.1	<0.1	<0.1	<0.1	<0.1	TC99B
7/2/2011	-	-	-	-	-	-	-	-	-	-	-	-
7/3/2011	-	-	-	-	-	-	-	-	-	-	-	-
7/4/2011	-	-	-	-	-	-	-	-	-	-	-	-
7/5/2011	17,092	-	8.01	<0.1	<0.1	<0.1	<0.1	<0.1	<0.1	<0.1	<0.1	TD05B
7/6/2011	16,842	-	7.38	<0.1	<0.1	<0.1	<0.1	<0.1	<0.1	<0.1	<0.1	TD21B
7/7/2011	15,381	-	7.86	<0.1	<0.1	<0.1	<0.1	<0.1	<0.1	<0.1	<0.1	TD32B
7/8/2011	19,708	-	7.78	<0.1	<0.1	<0.1	<0.1	<0.1	<0.1	<0.1	<0.1	TD48B
7/9/2011	100,000	-	7.15	-	-	-	-	-	-	-	-	-
7/10/2011	100,000	-	7.08	-	-	-	-	-	-	-	-	-
7/11/2011	100,000	-	7.06	-	-	-	-	-	-	-	-	-
7/12/2011	100,000	-	7.04	-	-	-	-	-	-	-	-	-
7/13/2011	100,000	-	7.01	-	-	-	-	-	-	-	-	-
7/14/2011	100,000	-	6.99	<0.1	<0.1	<0.1	<0.1	<0.1	<0.1	<0.1	<0.1	TE15B
7/15/2011	100,000	-	7.08	-	-	-	-	-	-	-	-	-
7/16/2011	100,000	-	7.46	-	-	-	-	-	-	-	-	-
7/17/2011	82,188	-	7.51	-	-	-	-	-	-	-	-	-
7/18/2011	67,826	-	7.48	-	-	-	-	-	-	-	-	-
7/19/2011	76,911	-	7.44	-	-	-	-	-	-	-	-	-
7/20/2011	82,709	<3.4	7.44	<0.1	<0.1	<0.1	<0.1	<0.1	<0.1	<0.1	<0.1	TE88D, TE88B
7/21/2011	96,917	-	7.54	-	-	-	-	-	-	-	-	-
7/22/2011	81,348	-	7.36	-	-	-	-	-	-	-	-	-
7/23/2011	-	-	-	-	-	-	-	-	-	-	-	-
7/24/2011	-	-	-	-	-	-	-	-	-	-	-	-
7/25/2011	30,408	-	7.55	-	-	-	-	-	-	-	-	-
7/26/2011	100,000	-	7.55	-	-	-	-	-	-	-	-	-
7/27/2011	100,000	-	7.53	-	-	-	-	-	-	-	-	-

TABLE D-1
BOEING COMMERCIAL AIRPLANE - NORTH BOEING FIELD FACILITY
LOCATION: 7500 EAST MARGINAL WAY SOUTH, SEATTLE, WA
DISCHARGE AUTHORIZATION NUMBER: 827-01

SAMPLE DATE	FLOW gal/day	FOG mg/L	pH	Aroclor 1016 ug/L	Aroclor 1242 ug/L	Aroclor 1248 ug/L	Aroclor 1254 ug/L	Aroclor 1260 ug/L	Aroclor 1221 ug/L	Aroclor 1232 ug/L	Aroclor 1262 ug/L	Lab ID#
DAILY LIMIT->	100,000	100	5.5-12	0.27	0.27	0.27	0.27	0.27	0.27	0.27	0.27	
7/28/2011	48,244	-	7.54									
7/29/2011	57,101	-	7.49	<0.1	<0.1	<0.1	<0.1	<0.1	<0.1	<0.1	<0.1	TG14B
7/30/2011	100,000	-	7.11	-	-	-	-	-	-	-	-	-
7/31/2011	100,000	-	7.09	-	-	-	-	-	-	-	-	-
8/1/2011	83,007	-	7.13	-	-	-	-	-	-	-	-	-
8/2/2011	47,720	-	7.25	-	-	-	-	-	-	-	-	-
8/3/2011	68,985	-	7.25	-	-	-	-	-	-	-	-	-
8/4/2011	100,000	-	7.06	<0.1	<0.1	<0.1	<0.1	<0.1	<0.1	<0.1	<0.1	TH15B
8/5/2011	69,180	-	6.89	-	-	-	-	-	-	-	-	-
8/6/2011	-	-	-	-	-	-	-	-	-	-	-	-
8/7/2011	-	-	-	-	-	-	-	-	-	-	-	-
8/8/2011	52,938	-	6.94	-	-	-	-	-	-	-	-	-
8/9/2011	100,000	-	6.85	-	-	-	-	-	-	-	-	-
8/10/2011	30,207	-	7.04	<0.1	<0.1	<0.1	<0.1	<0.1	<0.1	<0.1	<0.1	TI03C
8/11/2011	843	-	7.52	-	-	-	-	-	-	-	-	-
8/12/2011	2,418	-	7.23	-	-	-	-	-	-	-	-	-
8/13/2011	-	-	-	-	-	-	-	-	-	-	-	-
8/14/2011	354	-	7.33	-	-	-	-	-	-	-	-	-
8/15/2011	1,189	-	7.26	-	-	-	-	-	-	-	-	-
8/16/2011	707	-	7.24	-	-	-	-	-	-	-	-	-
8/17/2011	401	-	7.12	-	-	-	-	-	-	-	-	-
8/18/2011	-	-	-	-	-	-	-	-	-	-	-	-
8/19/2011	484	-	7.15	<0.1	<0.1	<0.1	<0.1	<0.1	<0.1	<0.1	<0.1	TJ28B
8/20/2011	-	-	-	-	-	-	-	-	-	-	-	-
8/21/2011	-	-	-	-	-	-	-	-	-	-	-	-
8/22/2011	-	-	-	-	-	-	-	-	-	-	-	-
8/23/2011	-	-	-	-	-	-	-	-	-	-	-	-

TABLE D-1
BOEING COMMERCIAL AIRPLANE - NORTH BOEING FIELD FACILITY
LOCATION: 7500 EAST MARGINAL WAY SOUTH, SEATTLE, WA
DISCHARGE AUTHORIZATION NUMBER: 827-01

SAMPLE DATE	FLOW gal/day	FOG mg/L	pH	Aroclor 1016 ug/L	Aroclor 1242 ug/L	Aroclor 1248 ug/L	Aroclor 1254 ug/L	Aroclor 1260 ug/L	Aroclor 1221 ug/L	Aroclor 1232 ug/L	Aroclor 1262 ug/L	Lab ID#
DAILY LIMIT->	100,000	100	5.5-12	0.27	0.27	0.27	0.27	0.27	0.27	0.27	0.27	
8/24/2011	1,074	-	7.31	-	-	-	-	-	-	-	-	-
8/25/2011	-	-	-	-	-	-	-	-	-	-	-	-
8/26/2011	217	<3.5	7.36	<0.1	<0.1	<0.1	<0.1	<0.1	<0.1	<0.1	<0.1	TK17B
8/27/2011	-	-	-	-	-	-	-	-	-	-	-	-
8/28/2011	-	-	-	-	-	-	-	-	-	-	-	-
8/29/2011	29,554	-	7.17	-	-	-	-	-	-	-	-	-
8/30/2011	50,698	-	6.93	<0.1	<0.1	<0.1	<0.1	<0.1	<0.1	<0.1	<0.1	TK53B
8/31/2011	96,242	-	7.05	-	-	-	-	-	-	-	-	-
9/1/2011	100,000	-	6.98	-	-	-	-	-	-	-	-	-
9/2/2011	100,000	-	6.95	-	-	-	-	-	-	-	-	-
9/3/2011	0	-	-	-	-	-	-	-	-	-	-	-
9/4/2011	56,447	-	7.00	-	-	-	-	-	-	-	-	-
9/5/2011	100,000	-	6.97	-	-	-	-	-	-	-	-	-
9/6/2011	100,000	-	6.92	-	-	-	-	-	-	-	-	-
9/7/2011	100,000	-	6.96	-	-	-	-	-	-	-	-	-
9/8/2011	100,000	-	6.89	<0.1	<0.1	<0.1	<0.1	<0.1	<0.1	<0.1	<0.1	TL44B
9/9/2011	87,195	-	7.02	-	-	-	-	-	-	-	-	-
9/10/2011	0	-	-	-	-	-	-	-	-	-	-	-
9/11/2011	0	-	-	-	-	-	-	-	-	-	-	-
9/12/2011	0	-	-	-	-	-	-	-	-	-	-	-
9/13/2011	27,414	-	6.94	-	-	-	-	-	-	-	-	-
9/14/2011	19,775	<3.3	7.08	<0.1	<0.1	<0.1	<0.1	<0.1	<0.1	<0.1	<0.1	TM22B
9/15/2011	0	-	-	-	-	-	-	-	-	-	-	-
9/16/2011	0	-	-	-	-	-	-	-	-	-	-	-
9/17/2011	0	-	-	-	-	-	-	-	-	-	-	-
9/18/2011	0	-	-	-	-	-	-	-	-	-	-	-
9/19/2011	351	-	7.22	-	-	-	-	-	-	-	-	-

TABLE D-1
BOEING COMMERCIAL AIRPLANE - NORTH BOEING FIELD FACILITY
LOCATION: 7500 EAST MARGINAL WAY SOUTH, SEATTLE, WA
DISCHARGE AUTHORIZATION NUMBER: 827-01

SAMPLE DATE	FLOW gal/day	FOG mg/L	pH	Aroclor 1016 ug/L	Aroclor 1242 ug/L	Aroclor 1248 ug/L	Aroclor 1254 ug/L	Aroclor 1260 ug/L	Aroclor 1221 ug/L	Aroclor 1232 ug/L	Aroclor 1262 ug/L	Lab ID#
DAILY LIMIT->	100,000	100	5.5-12	0.27	0.27	0.27	0.27	0.27	0.27	0.27	0.27	
9/20/2011	0	-	-	-	-	-	-	-	-	-	-	-
9/21/2011	0	-	-	-	-	-	-	-	-	-	-	-
9/22/2011	10,538	-	7.42	<0.1	<0.1	<0.1	<0.1	<0.1	<0.1	<0.1	<0.1	TN59B
9/23/2011	49,964	-	7.36	-	-	-	-	-	-	-	-	-
9/24/2011	11,383	-	7.28	-	-	-	-	-	-	-	-	-
9/25/2011	93,279	-	7.28	-	-	-	-	-	-	-	-	-
9/26/2011	81,326	-	7.22	-	-	-	-	-	-	-	-	-
9/27/2011	95,626	-	7.18	<0.1	<0.1	<0.1	<0.1	<0.1	<0.1	<0.1	<0.1	TO38B
9/28/2011	48,069	-	7.17	-	-	-	-	-	-	-	-	-
9/29/2011	10,869	-	7.16	-	-	-	-	-	-	-	-	-
9/30/2011	0	-	-	-	-	-	-	-	-	-	-	-
10/1/2011	-	-	-	-	-	-	-	-	-	-	-	-
10/2/2011	-	-	-	-	-	-	-	-	-	-	-	-
10/3/2011	9823	-	7.16	-	-	-	-	-	-	-	-	-
10/4/2011	4234	-	7.24	<0.1	<0.1	<0.1	<0.1	<0.1	<0.1	<0.1	<0.1	TP92B
10/5/2011	270	-	7.51	-	-	-	-	-	-	-	-	-
10/6/2011	-	-	-	-	-	-	-	-	-	-	-	-
10/7/2011	-	-	-	-	-	-	-	-	-	-	-	-
10/8/2011	-	-	-	-	-	-	-	-	-	-	-	-
10/9/2011	-	-	-	-	-	-	-	-	-	-	-	-
10/10/2011	363	-	7.64	-	-	-	-	-	-	-	-	-
10/11/2011	2536	<3.3	7.66	<0.1	<0.1	<0.1	<0.1	<0.1	<0.1	<0.1	<0.1	TR24B
10/12/2011	11499	-	7.63	-	-	-	-	-	-	-	-	-
10/13/2011	488	-	7.59	-	-	-	-	-	-	-	-	-
10/14/2011	-	-	-	-	-	-	-	-	-	-	-	-
10/15/2011	-	-	-	-	-	-	-	-	-	-	-	-
10/16/2011	-	-	-	-	-	-	-	-	-	-	-	-

TABLE D-1
BOEING COMMERCIAL AIRPLANE - NORTH BOEING FIELD FACILITY
LOCATION: 7500 EAST MARGINAL WAY SOUTH, SEATTLE, WA
DISCHARGE AUTHORIZATION NUMBER: 827-01

SAMPLE DATE	FLOW gal/day	FOG mg/L	pH	Aroclor 1016 ug/L	Aroclor 1242 ug/L	Aroclor 1248 ug/L	Aroclor 1254 ug/L	Aroclor 1260 ug/L	Aroclor 1221 ug/L	Aroclor 1232 ug/L	Aroclor 1262 ug/L	Lab ID#
DAILY LIMIT->	100,000	100	5.5-12	0.27	0.27	0.27	0.27	0.27	0.27	0.27	0.27	
10/17/2011	1344	-	7.76	-	-	-	-	-	-	-	-	-
10/18/2011	775	-	7.73	<0.1	<0.1	<0.1	<0.1	<0.1	<0.1	<0.1	<0.1	TS44B
10/19/2011	-	-	-	-	-	-	-	-	-	-	-	-
10/20/2011	-	-	-	-	-	-	-	-	-	-	-	-
10/21/2011	-	-	-	-	-	-	-	-	-	-	-	-
10/22/2011	-	-	-	-	-	-	-	-	-	-	-	-
10/23/2011	-	-	-	-	-	-	-	-	-	-	-	-
10/24/2011	382	-	7.9	-	-	-	-	-	-	-	-	-
10/25/2011	11899	-	7.88	-	-	-	-	-	-	-	-	-
10/26/2011	10085	-	7.97	<0.1	<0.1	**0.18**	**0.12**	<0.1	<0.1	<0.1	<0.1	TT82B
10/27/2011	11664	-	8.01	-	-	-	-	-	-	-	-	-
10/28/2011	11850	-	7.87	-	-	-	-	-	-	-	-	-
10/29/2011	-	-	-	-	-	-	-	-	-	-	-	-

NOTES:
1. Bold values indicate a detection above reporting limits
2. Shaded values indicate an excedance of discharge criteria.
3. Red values indicate the discharge flow was routed to holding tanks, pending KC acceptance of the 5 day system demonstration.

TABLE D-1
DEWATERING WELL SAMPLES
KING COUNTY STORM DRAIN REROUTE
NORTH BOEING FIELD

	Stormwater Benchmark Value	AWQC Chronic Marine	DW-01 7/12/2011	DW-02 7/12/2011	DW-03 7/12/2011	DW-03 7/19/2011	DW-04 7/14/2011	DW-04 7/19/2011	DW-05 7/14/2011	DW-06 7/14/2011	DW-06 8/4/2011	DW-07 7/19/2011	DW-08 7/19/2011	DW-09 7/20/2011	DW-10 7/19/2011	DW-11 7/20/2011	DW-12 7/20/2011	NBF-DTS-PRETREAT 7/19/2011	NBF-DTS-PREGAC 7/19/2011
VOCs (µg/L) (a)																			
Acetone			<5.0	<5.0	<5.0	<5.0 UJ	<5.0	<5.0 UJ	<5.0	<5.0	<5.0	<5.0 UJ	<5.0 UJ	<5.0 UJ	5.0 J	<5.0 UJ	<5.0 UJ	<5.0 UJ	<5.0 UJ
Bromodichloromethane		17 (b)	<0.2	<0.2	<0.2	<0.2	<0.2	<0.2	<0.2	<0.2	<0.2	<0.2	<0.2	<0.2	0.2	<0.2	<0.2	<0.2	<0.2
Carbon Tetrachloride		1.6 (b)	<0.2	<0.2	<0.2	<0.2	0.2	<0.2	<0.2	<0.2	<0.2	<0.2	<0.2	<0.2	<0.2	<0.2	<0.2	<0.2	<0.2
Chloroform		470 (b)	<0.2	<0.2	0.6	<0.2	0.8	0.6	0.5	0.3	<0.2	1.3	<0.2	<0.2	12	4.7	2.1	<0.2	<0.2
cis-1,2-Dichloroethene			<0.2	0.6	4.5	0.5	2.2	1.5	0.6	1.8	0.9	0.6	0.5	<0.2	<0.2	1.8	<0.2	1.4	1.2
Methylene Chloride		590 (b)	<0.5	<0.5	<0.5	<0.5	<0.5	<0.5	<0.5	<0.5	<0.5	<0.5	0.9	<0.5	<0.5	<0.5	<0.5	0.7	<0.5
Tetrachloroethene		3.3 (b)	<0.2	<0.2	0.5	<0.2	**6.4**	**4.8**	<0.2	<0.2	<0.2	<0.2	**18**	<0.2	<0.2	<0.2	<0.2	<0.2	<0.2
trans-1,2-Dichloroethene		10,000 (b)	<0.2	<0.2	<0.2	<0.2	<0.2	<0.2	<0.2	<0.2	<0.2	<0.2	<0.2	<0.2	<0.2	0.2	<0.2	<0.2	<0.2
Trichloroethene		30 (b)	<0.2	<0.2	0.9	<0.2	4.0	3.2	<0.2	0.9	0.9	<0.2	1.4	<0.2	<0.2	<0.2	<0.2	<0.2	<0.2
Vinyl Chloride		2.4 (b)	<0.2	<0.2	<0.2	0.5	<0.2	<0.2	<0.2	<0.2	<0.2	<0.2	<0.2	1.8	<0.2	1.1	<0.2	0.3	<0.2
Metals (µg/L)																			
Arsenic		36 (c)	0.4	1.1	5.6	1.2	1.8	1.8	4.4	4.0		1.4	0.8	1.2	1.9	2.2	1.8	2.0	1.0
Cadmium		8.8	<0.1	<0.1	<0.1	<0.2	<0.1	<0.2	<0.1	<0.1		<0.2	<0.2	<0.1	<0.2	<0.1	<0.1	<0.2	<0.2
Chromium		50 (c)	0.8	<0.5	0.7	<1	0.7	<2	1.6	<1		<1	<1	<0.5	<1	1.3	0.8	<2	<1
Copper	14(d)	2.4 (c)	0.6	<0.5	**2.8**	<1	1.6	1	**2.5**	1.0		<1	**4**	0.6	**5**	1.0	**3.4**	<1	<1
Lead		8.1 (c)	<0.1	0.1	0.1	<0.2	<0.1	<0.2	0.3	<0.1		0.4	<0.2	<0.1	0.3	<0.1	0.4	<0.2	<0.2
Mercury		0.025 (e)	<0.1	<0.1	<0.1	<0.1	<0.1	<0.1	<0.1	<0.1		<0.1	<0.1	<0.1	<0.1	<0.1	<0.1	<0.1	<0.1
Nickel		8.2 (c)	1.3	1.5	2.7	3	2.2	3	3.7	3.5		2	3	1.7	2	1.7	1.9	3	**10**
Zinc	117(d)	81 (c)	<4	<4	<4	<10	<4	<10	<4	<4		10	<10	<4	20	12	6	<10	<10
PCBs (µg/L)																			
Aroclor 1016			<0.010	<0.010	<0.010		<0.010		<0.010	<0.010		<0.010	<0.010	<0.010	<0.010	<0.010	<0.010		
Aroclor 1242			<0.010	<0.010	<0.010		<0.010		<0.010	<0.010		<0.010	<0.010	<0.010	<0.010	<0.010	<0.010		
Aroclor 1248			<0.010	<0.010	<0.010		<0.010		<0.010	<0.010		<0.010	<0.010	<0.010	<0.010	<0.010	<0.010		
Aroclor 1254			<0.010	<0.010	<0.010		<0.010		<0.010	<0.010		<0.010	<0.010	<0.010	<0.010	<0.010	<0.010		
Aroclor 1260			<0.010	<0.010	<0.010		<0.010		<0.010	<0.010		<0.010	<0.010	<0.010	<0.010	<0.010	<0.010		
Aroclor 1221			<0.010	<0.010	<0.010		<0.010		<0.010	<0.010		<0.010	<0.010	<0.010	<0.010	<0.010	<0.010		
Aroclor 1232			<0.010	<0.010	<0.010		<0.010		<0.010	<0.010		<0.010	<0.010	<0.010	<0.010	<0.010	<0.010		
Aroclor 1262			<0.010	<0.010	<0.010		<0.010		<0.010	<0.010		<0.010	<0.010	<0.010	<0.010	<0.010	<0.010		
Total PCBs		0.03	<0.010	<0.010	<0.010		<0.010		<0.010	<0.010		<0.010	<0.010	<0.010	<0.010	<0.010	<0.010		
Petroleum Hydrocarbons (mg/L)																			
Gasoline	No Visible Oil Sheen		<0.25	<0.25	<0.25		<0.25		<0.25	<0.25		<0.25	<0.25	<0.25	<0.25	<0.25	<0.25		
Diesel	No Visible Oil Sheen		<0.10	<0.10	<0.10		<0.10		<0.10	<0.10		<0.10	<0.10	<0.10	<0.10	0.30	<0.10		
Motor Oil	No Visible Oil Sheen		<0.20	<0.20	<0.20		<0.20		<0.20	<0.20		<0.20	<0.20	<0.20	<0.20	<0.20	<0.20		
		Approved or Proposed Treatment	**Dewatering Complete, sent to DW**	**Dewatering Complete, sent to DW**	**Dewatering Complete, sent to DW**	**DW**	**Approved STST**	**Approved STST, resample for VOCs**	**VOC resample results**	**Approved STST**	**DW**	**Approved STST**	**Approved STST**	**Approved STST**	**Approved STST**		

Bold = Exceedance of AWQC Chronic Marine criteria.
blank = No criteria established.
J = Indicates the analyte was positively identified; the associated numerical value is the approximate concentration of the analyte in the sample.
UJ = The analyte was not detected in the sample; the reported sample reporting limit is an estimate.
DW = Dewatering treatment system, then to sanitary sewer
STST = Short-term Stormwater Treatment system

(a) Detected constituents only.
(b) No criterion established for protection of aquatic organisms; listed criterion is AWQC for protection of human health based on ingestion of aquatic organisms.
(c) Criteria for these metals are expressed as a function of the water effect ratio, WER, as defined in 40 CFR 131.36(c); CCC (chronic criterion) = listed value x WER.
(d) Benchmark for total metal.
(e) Criterion expressed as total recoverable metal.

Discharge Laboratory Reports

Analytical Resources, Incorporated
Analytical Chemists and Consultants

July 15, 2011

Kris Hendrickson
Landau Associates, Inc.
130 Second Ave
Edmonds, WA 98020

RE: Project: NBF – Dewatering Wells 025082.311
ARI Job: TD86

Dear Kris:

Please find enclosed the Chain of Custody (COC) record, sample receipt documentation, and analytical results for the above referenced project. Analytical Resources, Inc. (ARI) accepted three water samples and a trip blank in good condition on July 12, 2011. One cooler was received with a temperature of 9.5°C.

The samples were analyzed for PCBs, VOCs, NWTPH-Gx, NWTPH-Dx and Dissolved Metals, as requested on the COC.

The VOCs CCAL is out of control high for all associated FORM III "Q" flagged analytes with the exception of Chloromethane which is out of control low. All associated samples that contain analyte have been flagged with a "Q" qualifier.

The VOCs LCS and/or LCSD are out of control both low and/or high for several analytes with an RPD for Acrylonitrile outside of the +/- 20% control limits.

The VOCs method blank contains 1,2,3-Trichlorobenzene and Hexachlorobutadiene. All associated samples that contain analyte have been flagged with a "B" qualifier.

There were no other irregularities with the samples.

Quality control analysis results are included for your review. Copies of the reports and all associated raw data will be kept on file electronically at ARI. If you have any questions or require additional information, please contact me at your convenience.

Sincerely,
ANALYTICAL RESOURCES, INC

Kelly Bottem
Client Services Manager
(206) 695-6211
kellyb@arilabs.com
www.arilabs.com

cc: Carl Bach, The Boeing Company, P.O. Box 3707, M/S 1W-12, Seattle, WA 98124-2207

4611 South 134th Place, Suite 100 • Tukwila WA 98168 • **206-695-6200** • **206-695-6201** fax

LANDAU ASSOCIATES

☒ Seattle/Edmonds (425) 778-0907
☐ Tacoma (253) 926-2493
☐ Spokane (509) 327-9737
☐ Portland (503) 542-1080
☐ _____

Chain-of-Custody Record

Date 7/12/11
Page 1 of 1

Project Name North Boeing Field Project No. 025082.311
Project Location/Event Seattle, WA / Dewatering Well Samples
Sampler's Name Dylan Frazer / Brandon Duncan
Project Contact Carl Bach / Kris Hendrickson
Send Results To Carl Bach / Kris Hendrickson / Anne Halvorsen

Turnaround Time
☐ Standard
☒ Accelerated
* 24 hour (if possible)

Testing Parameters

Sample I.D.	Date	Time	Matrix	No. of Containers	Dissolved Metals*	VOCs	PCBs	TPH-Dx	TPH-Gx							
DW-01-071211	7/12/11	1515	H_2O	10	X	X	X	X	X							
DW-02-071211	7/12/11	1530	H_2O	10	X	X	X	X	X							
DW-03-071211	7/12/11	1545	H_2O	10	X	X	X	X	X							
TRIP BLANKS	7/12/11	n/a	H_2O	2		X			X							

Observations/Comments

~~X Allow water samples to settle, collect aliquot from clear portion~~ (Ong)

X NWTPH-Dx - run acid wash/silica gel cleanup

___ run samples standardized to _____ product

___ Analyze for EPH if no specific product identified

VOC/BTEX/VPH (soil):
___ non-preserved
___ preserved w/methanol
___ preserved w/sodium bisulfate
___ Freeze upon receipt

___ Dissolved metal water samples field filtered

Other * Field Filtered, Arsenic, Cadmium, Chromium, Copper, Lead, Mercury, Nickel, Zinc

Special Shipment/Handling or Storage Requirements OJ 1C

Method of Shipment Drop off at ARI

Relinquished by	Received by	Relinquished by	Received by
Signature [signature]	Signature [signature]	Signature	Signature
Printed Name Dylan Frazer	Printed Name Jennifer Millsap	Printed Name	Printed Name
Company LAI	Company ARI	Company	Company
Date 7/12/11 Time 1700	Date 7/12/11 Time 1700	Date ____ Time ____	Date ____ Time ____

WHITE COPY - Project File YELLOW COPY - Laboratory PINK COPY - Client Representative

Rev 8/09

Sample ID Cross Reference Report

ANALYTICAL RESOURCES INCORPORATED

ARI Job No: TD86
Client: The Boeing Company
Project Event: 025082.311
Project Name: NBF

	Sample ID	ARI Lab ID	ARI LIMS ID	Matrix	Sample Date/Time	VTSR
1.	DW-01-071211	TD86A	11-15010	Water	07/12/11 15:15	07/12/11 17:00
2.	DW-02-071211	TD86B	11-15011	Water	07/12/11 15:30	07/12/11 17:00
3.	DW-03-071211	TD86C	11-15012	Water	07/12/11 15:45	07/12/11 17:00
4.	Trip Blanks	TD86D	11-15013	Water	07/12/11	07/12/11 17:00

Printed 07/13/11

PRESERVATION VERIFICATION 07/12/11

ANALYTICAL RESOURCES INCORPORATED

ARI Job No: **TD86**

Inquiry Number: NONE
Analysis Requested: 07/13/11
Contact: Bach,Carl
Client: The Boeing Company
Logged by: JM
Sample Set Used: Yes-481
Validatable Package: No
Deliverables:

PC: Kelly
VTSR: 07/12/11

Project #: 025082.311
Project: NBF
Sample Site:
SDG No:
Analytical Protocol: In-house

LOGNUM ARI ID	CLIENT ID	CN >12	WAD >12	NH3 <2	COD <2	FOG <2	MET <2	PHEN <2	PHOS <2	TKN <2	NO23 <2	TOC <2	S2 >9	AK102 <2	Fe2+ <2	DMET FLT	DOC FLT	PARAMETER	ADJUSTED TO	LOT NUMBER	AMOUNT ADDED	DATE/BY
11-15010 **TD86A**	DW-01-071211						DIS									Y						
11-15011 **TD86B**	DW-02-071211						DIS									Y						
11-15012 **TD86C**	DW-03-071211						DIS									Y						

Checked By JM Date 7/12/11

Analytical Resources, Incorporated
Analytical Chemists and Consultants

Cooler Receipt Form

ARI Client: Boeing

Project Name: NBF

COC No(s): _____ NA

Delivered by: Fed-Ex UPS Courier Hand Delivered Other: _____

Assigned ARI Job No: TD86

Tracking No: _____ NA

Preliminary Examination Phase:

Were intact, properly signed and dated custody seals attached to the outside of to cooler? YES NO

Were custody papers included with the cooler? ..... YES NO

Were custody papers properly filled out (ink, signed, etc.) ..... YES NO

Temperature of Cooler(s) (°C) (recommended 2.0-6.0 °C for chemistry)..... 9.5

If cooler temperature is out of compliance fill out form 00070F Temp Gun ID#: 90941619

Cooler Accepted by: JIII Date: 7/12/11 Time: 1700

Complete custody forms and attach all shipping documents

Log-In Phase:

Was a temperature blank included in the cooler? ..... YES NO

What kind of packing material was used? ... Bubble Wrap Wet Ice Gel Packs Baggies Foam Block Paper Other: _____

Was sufficient ice used (if appropriate)? ..... NA YES NO

Were all bottles sealed in individual plastic bags? ..... YES NO

Did all bottles arrive in good condition (unbroken)? ..... YES NO

Were all bottle labels complete and legible? ..... YES NO

Did the number of containers listed on COC match with the number of containers received? ..... YES NO

Did all bottle labels and tags agree with custody papers? ..... YES NO

Were all bottles used correct for the requested analyses? ..... YES NO

Do any of the analyses (bottles) require preservation? (attach preservation sheet, excluding VOCs)... NA YES NO

Were all VOC vials free of air bubbles? ..... NA YES NO

Was sufficient amount of sample sent in each bottle? ..... YES NO

Date VOC Trip Blank was made at ARI..... NA 7/12/11

Was Sample Split by ARI : NA YES Date/Time: _____ Equipment: _____ Split by: _____

Samples Logged by: JM Date: 7/12/11 Time: 1711

***** Notify Project Manager of discrepancies or concerns *****

Sample ID on Bottle	Sample ID on COC	Sample ID on Bottle	Sample ID on COC

Additional Notes, Discrepancies, & Resolutions:

DW-01-071211= 3m in 2 of 5
DW-02-071211= 3m in 1 of 5
DW-03-071211= 3m in 1 of 5

By: JM Date: 7/12/11

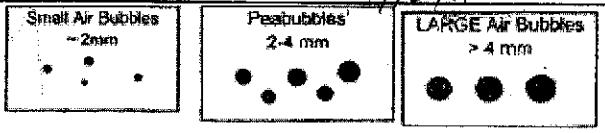

Small → "sm"
Peabubbles → "pb"
Large → "lg"
Headspace → "hs"

Analytical Resources, Incorporated
Analytical Chemists and Consultants

Cooler Temperature Compliance Form

TD86

Cooler#: 1	Temperature(°C): 9.5	
Sample ID	**Bottle Count**	**Bottle Type**
DW-01-071211	10	5-40mL VOA, 1-16oz HDPE, 2-500mL AG, 1-1L AG
-02	↓	↓
-03	↓	↓
Trip Blanks	2	2-40mL VOA

Not Sampled 7/12/11 JD.

Cooler#:	Temperature(°C):	
Sample ID	**Bottle Count**	**Bottle Type**

Cooler#:	Temperature(°C):	
Sample ID	**Bottle Count**	**Bottle Type**

Cooler#:	Temperature(°C):	
Sample ID	**Bottle Count**	**Bottle Type**

Completed by: 7/12/11 JM Date: 7/12/11 Time: 1711

ANALYTICAL RESOURCES INCORPORATED

ORGANICS ANALYSIS DATA SHEET
Volatiles by Purge & Trap GC/MS-Method SW8260C **Sample ID: DW-01-071211**
 SAMPLE

Lab Sample ID: TD86A
LIMS ID: 11-15010
Matrix: Water
Data Release Authorized: VD
Reported: 07/14/11

QC Report No: TD86-The Boeing Company
Project: NBF
025082.311
Date Sampled: 07/12/11
Date Received: 07/12/11

Instrument/Analyst: NT5/PAB
Date Analyzed: 07/13/11 15:22

Sample Amount: 10.0 mL
Purge Volume: 10.0 mL

CAS Number	Analyte	RL	Result	Q
74-87-3	Chloromethane	0.5	< 0.5	U
74-83-9	Bromomethane	1.0	< 1.0	U
75-01-4	Vinyl Chloride	0.2	< 0.2	U
75-00-3	Chloroethane	0.2	< 0.2	U
75-09-2	Methylene Chloride	0.5	< 0.5	U
67-64-1	Acetone	5.0	< 5.0	U
75-15-0	Carbon Disulfide	0.2	< 0.2	U
75-35-4	1,1-Dichloroethene	0.2	< 0.2	U
75-34-3	1,1-Dichloroethane	0.2	< 0.2	U
156-60-5	trans-1,2-Dichloroethene	0.2	< 0.2	U
156-59-2	cis-1,2-Dichloroethene	0.2	< 0.2	U
67-66-3	Chloroform	0.2	< 0.2	U
107-06-2	1,2-Dichloroethane	0.2	< 0.2	U
78-93-3	2-Butanone	5.0	< 5.0	U
71-55-6	1,1,1-Trichloroethane	0.2	< 0.2	U
56-23-5	Carbon Tetrachloride	0.2	< 0.2	U
108-05-4	Vinyl Acetate	1.0	< 1.0	U
75-27-4	Bromodichloromethane	0.2	< 0.2	U
78-87-5	1,2-Dichloropropane	0.2	< 0.2	U
10061-01-5	cis-1,3-Dichloropropene	0.2	< 0.2	U
79-01-6	Trichloroethene	0.2	< 0.2	U
124-48-1	Dibromochloromethane	0.2	< 0.2	U
79-00-5	1,1,2-Trichloroethane	0.2	< 0.2	U
71-43-2	Benzene	0.2	< 0.2	U
10061-02-6	trans-1,3-Dichloropropene	0.2	< 0.2	U
110-75-8	2-Chloroethylvinylether	1.0	< 1.0	U
75-25-2	Bromoform	0.2	< 0.2	U
108-10-1	4-Methyl-2-Pentanone (MIBK)	5.0	< 5.0	U
591-78-6	2-Hexanone	5.0	< 5.0	U
127-18-4	Tetrachloroethene	0.2	< 0.2	U
79-34-5	1,1,2,2-Tetrachloroethane	0.2	< 0.2	U
108-88-3	Toluene	0.2	< 0.2	U
108-90-7	Chlorobenzene	0.2	< 0.2	U
100-41-4	Ethylbenzene	0.2	< 0.2	U
100-42-5	Styrene	0.2	< 0.2	U
75-69-4	Trichlorofluoromethane	0.2	< 0.2	U

ANALYTICAL RESOURCES INCORPORATED

ORGANICS ANALYSIS DATA SHEET
Volatiles by Purge & Trap GC/MS-Method SW8260C **Sample ID: DW-01-071211**
 SAMPLE

Lab Sample ID: TD86A
LIMS ID: 11-15010
Matrix: Water
Date Analyzed: 07/13/11 15:22

QC Report No: TD86-The Boeing Company
Project: NBF
025082.311

CAS Number	Analyte	RL	Result	Q
76-13-1	1,1,2-Trichloro-1,2,2-trifluoroe	0.2	< 0.2	U
179601-23-1	m,p-Xylene	0.4	< 0.4	U
95-47-6	o-Xylene	0.2	< 0.2	U
95-50-1	1,2-Dichlorobenzene	0.2	< 0.2	U
541-73-1	1,3-Dichlorobenzene	0.2	< 0.2	U
106-46-7	1,4-Dichlorobenzene	0.2	< 0.2	U
107-02-8	Acrolein	5.0	< 5.0	U
74-88-4	Methyl Iodide	1.0	< 1.0	U
74-96-4	Bromoethane	0.2	< 0.2	U
107-13-1	Acrylonitrile	1.0	< 1.0	U
563-58-6	1,1-Dichloropropene	0.2	< 0.2	U
74-95-3	Dibromomethane	0.2	< 0.2	U
630-20-6	1,1,1,2-Tetrachloroethane	0.2	< 0.2	U
96-12-8	1,2-Dibromo-3-chloropropane	0.5	< 0.5	U
96-18-4	1,2,3-Trichloropropane	0.5	< 0.5	U
110-57-6	trans-1,4-Dichloro-2-butene	1.0	< 1.0	U
108-67-8	1,3,5-Trimethylbenzene	0.2	< 0.2	U
95-63-6	1,2,4-Trimethylbenzene	0.2	< 0.2	U
87-68-3	Hexachlorobutadiene	0.5	< 0.5	U
106-93-4	Ethylene Dibromide	0.2	< 0.2	U
74-97-5	Bromochloromethane	0.2	< 0.2	U
594-20-7	2,2-Dichloropropane	0.2	< 0.2	U
142-28-9	1,3-Dichloropropane	0.2	< 0.2	U
98-82-8	Isopropylbenzene	0.2	< 0.2	U
103-65-1	n-Propylbenzene	0.2	< 0.2	U
108-86-1	Bromobenzene	0.2	< 0.2	U
95-49-8	2-Chlorotoluene	0.2	< 0.2	U
106-43-4	4-Chlorotoluene	0.2	< 0.2	U
98-06-6	tert-Butylbenzene	0.2	< 0.2	U
135-98-8	sec-Butylbenzene	0.2	< 0.2	U
99-87-6	4-Isopropyltoluene	0.2	< 0.2	U
104-51-8	n-Butylbenzene	0.2	< 0.2	U
120-82-1	1,2,4-Trichlorobenzene	0.5	< 0.5	U
91-20-3	Naphthalene	0.5	< 0.5	U
87-61-6	1,2,3-Trichlorobenzene	0.5	< 0.5	U

Reported in µg/L (ppb)

Volatile Surrogate Recovery

d4-1,2-Dichloroethane	108%
d8-Toluene	95.2%
Bromofluorobenzene	94.8%
d4-1,2-Dichlorobenzene	99.3%

2-Chloroethylvinylether is an acid labile compound and may not be recovered from an acid preserved sample.

ANALYTICAL RESOURCES INCORPORATED

ORGANICS ANALYSIS DATA SHEET
Volatiles by Purge & Trap GC/MS-Method SW8260C **Sample ID: DW-02-071211**
 SAMPLE

Lab Sample ID: TD86B
LIMS ID: 11-15011
Matrix: Water
Data Release Authorized: VD
Reported: 07/14/11

QC Report No: TD86-The Boeing Company
Project: NBF
025082.311
Date Sampled: 07/12/11
Date Received: 07/12/11

Instrument/Analyst: NT5/PAB
Date Analyzed: 07/13/11 15:50

Sample Amount: 10.0 mL
Purge Volume: 10.0 mL

CAS Number	Analyte	RL	Result	Q
74-87-3	Chloromethane	0.5	< 0.5	U
74-83-9	Bromomethane	1.0	< 1.0	U
75-01-4	Vinyl Chloride	0.2	< 0.2	U
75-00-3	Chloroethane	0.2	< 0.2	U
75-09-2	Methylene Chloride	0.5	< 0.5	U
67-64-1	Acetone	5.0	< 5.0	U
75-15-0	Carbon Disulfide	0.2	< 0.2	U
75-35-4	1,1-Dichloroethene	0.2	< 0.2	U
75-34-3	1,1-Dichloroethane	0.2	< 0.2	U
156-60-5	trans-1,2-Dichloroethene	0.2	< 0.2	U
156-59-2	**cis-1,2-Dichloroethene**	**0.2**	**0.6**	
67-66-3	Chloroform	0.2	< 0.2	U
107-06-2	1,2-Dichloroethane	0.2	< 0.2	U
78-93-3	2-Butanone	5.0	< 5.0	U
71-55-6	1,1,1-Trichloroethane	0.2	< 0.2	U
56-23-5	Carbon Tetrachloride	0.2	< 0.2	U
108-05-4	Vinyl Acetate	1.0	< 1.0	U
75-27-4	Bromodichloromethane	0.2	< 0.2	U
78-87-5	1,2-Dichloropropane	0.2	< 0.2	U
10061-01-5	cis-1,3-Dichloropropene	0.2	< 0.2	U
79-01-6	Trichloroethene	0.2	< 0.2	U
124-48-1	Dibromochloromethane	0.2	< 0.2	U
79-00-5	1,1,2-Trichloroethane	0.2	< 0.2	U
71-43-2	Benzene	0.2	< 0.2	U
10061-02-6	trans-1,3-Dichloropropene	0.2	< 0.2	U
110-75-8	2-Chloroethylvinylether	1.0	< 1.0	U
75-25-2	Bromoform	0.2	< 0.2	U
108-10-1	4-Methyl-2-Pentanone (MIBK)	5.0	< 5.0	U
591-78-6	2-Hexanone	5.0	< 5.0	U
127-18-4	Tetrachloroethene	0.2	< 0.2	U
79-34-5	1,1,2,2-Tetrachloroethane	0.2	< 0.2	U
108-88-3	Toluene	0.2	< 0.2	U
108-90-7	Chlorobenzene	0.2	< 0.2	U
100-41-4	Ethylbenzene	0.2	< 0.2	U
100-42-5	Styrene	0.2	< 0.2	U
75-69-4	Trichlorofluoromethane	0.2	< 0.2	U

ANALYTICAL RESOURCES INCORPORATED

ORGANICS ANALYSIS DATA SHEET
Volatiles by Purge & Trap GC/MS-Method SW8260C **Sample ID: DW-02-071211**
 SAMPLE

Lab Sample ID: TD86B
LIMS ID: 11-15011
Matrix: Water
Date Analyzed: 07/13/11 15:50

QC Report No: TD86-The Boeing Company
Project: NBF
025082.311

CAS Number	Analyte	RL	Result	Q
76-13-1	1,1,2-Trichloro-1,2,2-trifluoroe	0.2	< 0.2	U
179601-23-1	m,p-Xylene	0.4	< 0.4	U
95-47-6	o-Xylene	0.2	< 0.2	U
95-50-1	1,2-Dichlorobenzene	0.2	< 0.2	U
541-73-1	1,3-Dichlorobenzene	0.2	< 0.2	U
106-46-7	1,4-Dichlorobenzene	0.2	< 0.2	U
107-02-8	Acrolein	5.0	< 5.0	U
74-88-4	Methyl Iodide	1.0	< 1.0	U
74-96-4	Bromoethane	0.2	< 0.2	U
107-13-1	Acrylonitrile	1.0	< 1.0	U
563-58-6	1,1-Dichloropropene	0.2	< 0.2	U
74-95-3	Dibromomethane	0.2	< 0.2	U
630-20-6	1,1,1,2-Tetrachloroethane	0.2	< 0.2	U
96-12-8	1,2-Dibromo-3-chloropropane	0.5	< 0.5	U
96-18-4	1,2,3-Trichloropropane	0.5	< 0.5	U
110-57-6	trans-1,4-Dichloro-2-butene	1.0	< 1.0	U
108-67-8	1,3,5-Trimethylbenzene	0.2	< 0.2	U
95-63-6	1,2,4-Trimethylbenzene	0.2	< 0.2	U
87-68-3	Hexachlorobutadiene	0.5	< 0.5	U
106-93-4	Ethylene Dibromide	0.2	< 0.2	U
74-97-5	Bromochloromethane	0.2	< 0.2	U
594-20-7	2,2-Dichloropropane	0.2	< 0.2	U
142-28-9	1,3-Dichloropropane	0.2	< 0.2	U
98-82-8	Isopropylbenzene	0.2	< 0.2	U
103-65-1	n-Propylbenzene	0.2	< 0.2	U
108-86-1	Bromobenzene	0.2	< 0.2	U
95-49-8	2-Chlorotoluene	0.2	< 0.2	U
106-43-4	4-Chlorotoluene	0.2	< 0.2	U
98-06-6	tert-Butylbenzene	0.2	< 0.2	U
135-98-8	sec-Butylbenzene	0.2	< 0.2	U
99-87-6	4-Isopropyltoluene	0.2	< 0.2	U
104-51-8	n-Butylbenzene	0.2	< 0.2	U
120-82-1	1,2,4-Trichlorobenzene	0.5	< 0.5	U
91-20-3	Naphthalene	0.5	< 0.5	U
87-61-6	1,2,3-Trichlorobenzene	0.5	< 0.5	U

Reported in µg/L (ppb)

Volatile Surrogate Recovery

d4-1,2-Dichloroethane	108%
d8-Toluene	93.9%
Bromofluorobenzene	92.5%
d4-1,2-Dichlorobenzene	100%

2-Chloroethylvinylether is an acid labile compound and may not be recovered from an acid preserved sample.

ANALYTICAL RESOURCES INCORPORATED

ORGANICS ANALYSIS DATA SHEET
Volatiles by Purge & Trap GC/MS-Method SW8260C **Sample ID: DW-03-071211**
 SAMPLE

Lab Sample ID: TD86C
LIMS ID: 11-15012
Matrix: Water
Data Release Authorized: VD
Reported: 07/14/11

QC Report No: TD86-The Boeing Company
Project: NBF
025082.311
Date Sampled: 07/12/11
Date Received: 07/12/11

Instrument/Analyst: NT5/PAB
Date Analyzed: 07/13/11 16:19

Sample Amount: 10.0 mL
Purge Volume: 10.0 mL

CAS Number	Analyte	RL	Result	Q
74-87-3	Chloromethane	0.5	< 0.5	U
74-83-9	Bromomethane	1.0	< 1.0	U
75-01-4	Vinyl Chloride	0.2	< 0.2	U
75-00-3	Chloroethane	0.2	< 0.2	U
75-09-2	Methylene Chloride	0.5	< 0.5	U
67-64-1	Acetone	5.0	< 5.0	U
75-15-0	Carbon Disulfide	0.2	< 0.2	U
75-35-4	1,1-Dichloroethene	0.2	< 0.2	U
75-34-3	1,1-Dichloroethane	0.2	< 0.2	U
156-60-5	trans-1,2-Dichloroethene	0.2	< 0.2	U
156-59-2	**cis-1,2-Dichloroethene**	**0.2**	**4.5**	
67-66-3	**Chloroform**	**0.2**	**0.6**	
107-06-2	1,2-Dichloroethane	0.2	< 0.2	U
78-93-3	2-Butanone	5.0	< 5.0	U
71-55-6	1,1,1-Trichloroethane	0.2	< 0.2	U
56-23-5	Carbon Tetrachloride	0.2	< 0.2	U
108-05-4	Vinyl Acetate	1.0	< 1.0	U
75-27-4	Bromodichloromethane	0.2	< 0.2	U
78-87-5	1,2-Dichloropropane	0.2	< 0.2	U
10061-01-5	cis-1,3-Dichloropropene	0.2	< 0.2	U
79-01-6	**Trichloroethene**	**0.2**	**0.9**	
124-48-1	Dibromochloromethane	0.2	< 0.2	U
79-00-5	1,1,2-Trichloroethane	0.2	< 0.2	U
71-43-2	Benzene	0.2	< 0.2	U
10061-02-6	trans-1,3-Dichloropropene	0.2	< 0.2	U
110-75-8	2-Chloroethylvinylether	1.0	< 1.0	U
75-25-2	Bromoform	0.2	< 0.2	U
108-10-1	4-Methyl-2-Pentanone (MIBK)	5.0	< 5.0	U
591-78-6	2-Hexanone	5.0	< 5.0	U
127-18-4	**Tetrachloroethene**	**0.2**	**0.5**	
79-34-5	1,1,2,2-Tetrachloroethane	0.2	< 0.2	U
108-88-3	Toluene	0.2	< 0.2	U
108-90-7	Chlorobenzene	0.2	< 0.2	U
100-41-4	Ethylbenzene	0.2	< 0.2	U
100-42-5	Styrene	0.2	< 0.2	U
75-69-4	Trichlorofluoromethane	0.2	< 0.2	U

ANALYTICAL RESOURCES INCORPORATED

ORGANICS ANALYSIS DATA SHEET
Volatiles by Purge & Trap GC/MS-Method SW8260C **Sample ID: DW-03-071211**
 SAMPLE

Lab Sample ID: TD86C
LIMS ID: 11-15012
Matrix: Water
Date Analyzed: 07/13/11 16:19

QC Report No: TD86-The Boeing Company
Project: NBF
025082.311

CAS Number	Analyte	RL	Result	Q
76-13-1	1,1,2-Trichloro-1,2,2-trifluoroe	0.2	< 0.2	U
179601-23-1	m,p-Xylene	0.4	< 0.4	U
95-47-6	o-Xylene	0.2	< 0.2	U
95-50-1	1,2-Dichlorobenzene	0.2	< 0.2	U
541-73-1	1,3-Dichlorobenzene	0.2	< 0.2	U
106-46-7	1,4-Dichlorobenzene	0.2	< 0.2	U
107-02-8	Acrolein	5.0	< 5.0	U
74-88-4	Methyl Iodide	1.0	< 1.0	U
74-96-4	Bromoethane	0.2	< 0.2	U
107-13-1	Acrylonitrile	1.0	< 1.0	U
563-58-6	1,1-Dichloropropene	0.2	< 0.2	U
74-95-3	Dibromomethane	0.2	< 0.2	U
630-20-6	1,1,1,2-Tetrachloroethane	0.2	< 0.2	U
96-12-8	1,2-Dibromo-3-chloropropane	0.5	< 0.5	U
96-18-4	1,2,3-Trichloropropane	0.5	< 0.5	U
110-57-6	trans-1,4-Dichloro-2-butene	1.0	< 1.0	U
108-67-8	1,3,5-Trimethylbenzene	0.2	< 0.2	U
95-63-6	1,2,4-Trimethylbenzene	0.2	< 0.2	U
87-68-3	Hexachlorobutadiene	0.5	< 0.5	U
106-93-4	Ethylene Dibromide	0.2	< 0.2	U
74-97-5	Bromochloromethane	0.2	< 0.2	U
594-20-7	2,2-Dichloropropane	0.2	< 0.2	U
142-28-9	1,3-Dichloropropane	0.2	< 0.2	U
98-82-8	Isopropylbenzene	0.2	< 0.2	U
103-65-1	n-Propylbenzene	0.2	< 0.2	U
108-86-1	Bromobenzene	0.2	< 0.2	U
95-49-8	2-Chlorotoluene	0.2	< 0.2	U
106-43-4	4-Chlorotoluene	0.2	< 0.2	U
98-06-6	tert-Butylbenzene	0.2	< 0.2	U
135-98-8	sec-Butylbenzene	0.2	< 0.2	U
99-87-6	4-Isopropyltoluene	0.2	< 0.2	U
104-51-8	n-Butylbenzene	0.2	< 0.2	U
120-82-1	1,2,4-Trichlorobenzene	0.5	< 0.5	U
91-20-3	Naphthalene	0.5	< 0.5	U
87-61-6	1,2,3-Trichlorobenzene	0.5	< 0.5	U

Reported in µg/L (ppb)

Volatile Surrogate Recovery

d4-1,2-Dichloroethane	107%
d8-Toluene	93.4%
Bromofluorobenzene	94.0%
d4-1,2-Dichlorobenzene	102%

2-Chloroethylvinylether is an acid labile compound and may not be recovered from an acid preserved sample.

ANALYTICAL RESOURCES INCORPORATED

ORGANICS ANALYSIS DATA SHEET
Volatiles by Purge & Trap GC/MS-Method SW8260C **Sample ID: Trip Blanks**
 SAMPLE

Lab Sample ID: TD86D
LIMS ID: 11-15013
Matrix: Water
Data Release Authorized: VD
Reported: 07/14/11

QC Report No: TD86-The Boeing Company
Project: NBF
025082.311
Date Sampled: 07/12/11
Date Received: 07/12/11

Instrument/Analyst: NT5/PAB
Date Analyzed: 07/13/11 16:47

Sample Amount: 10.0 mL
Purge Volume: 10.0 mL

CAS Number	Analyte	RL	Result	Q
74-87-3	Chloromethane	0.5	< 0.5	U
74-83-9	Bromomethane	1.0	< 1.0	U
75-01-4	Vinyl Chloride	0.2	< 0.2	U
75-00-3	Chloroethane	0.2	< 0.2	U
75-09-2	Methylene Chloride	0.5	< 0.5	U
67-64-1	Acetone	5.0	< 5.0	U
75-15-0	Carbon Disulfide	0.2	< 0.2	U
75-35-4	1,1-Dichloroethene	0.2	< 0.2	U
75-34-3	1,1-Dichloroethane	0.2	< 0.2	U
156-60-5	trans-1,2-Dichloroethene	0.2	< 0.2	U
156-59-2	cis-1,2-Dichloroethene	0.2	< 0.2	U
67-66-3	Chloroform	0.2	< 0.2	U
107-06-2	1,2-Dichloroethane	0.2	< 0.2	U
78-93-3	2-Butanone	5.0	< 5.0	U
71-55-6	1,1,1-Trichloroethane	0.2	< 0.2	U
56-23-5	Carbon Tetrachloride	0.2	< 0.2	U
108-05-4	Vinyl Acetate	1.0	< 1.0	U
75-27-4	Bromodichloromethane	0.2	< 0.2	U
78-87-5	1,2-Dichloropropane	0.2	< 0.2	U
10061-01-5	cis-1,3-Dichloropropene	0.2	< 0.2	U
79-01-6	Trichloroethene	0.2	< 0.2	U
124-48-1	Dibromochloromethane	0.2	< 0.2	U
79-00-5	1,1,2-Trichloroethane	0.2	< 0.2	U
71-43-2	Benzene	0.2	< 0.2	U
10061-02-6	trans-1,3-Dichloropropene	0.2	< 0.2	U
110-75-8	2-Chloroethylvinylether	1.0	< 1.0	U
75-25-2	Bromoform	0.2	< 0.2	U
108-10-1	4-Methyl-2-Pentanone (MIBK)	5.0	< 5.0	U
591-78-6	2-Hexanone	5.0	< 5.0	U
127-18-4	Tetrachloroethene	0.2	< 0.2	U
79-34-5	1,1,2,2-Tetrachloroethane	0.2	< 0.2	U
108-88-3	Toluene	0.2	< 0.2	U
108-90-7	Chlorobenzene	0.2	< 0.2	U
100-41-4	Ethylbenzene	0.2	< 0.2	U
100-42-5	Styrene	0.2	< 0.2	U
75-69-4	Trichlorofluoromethane	0.2	< 0.2	U

ANALYTICAL RESOURCES INCORPORATED

ORGANICS ANALYSIS DATA SHEET
Volatiles by Purge & Trap GC/MS-Method SW8260C **Sample ID: Trip Blanks**
 SAMPLE

Lab Sample ID: TD86D
LIMS ID: 11-15013
Matrix: Water
Date Analyzed: 07/13/11 16:47

QC Report No: TD86-The Boeing Company
Project: NBF
025082.311

CAS Number	Analyte	RL	Result	Q
76-13-1	1,1,2-Trichloro-1,2,2-trifluoroe	0.2	< 0.2	U
179601-23-1	m,p-Xylene	0.4	< 0.4	U
95-47-6	o-Xylene	0.2	< 0.2	U
95-50-1	1,2-Dichlorobenzene	0.2	< 0.2	U
541-73-1	1,3-Dichlorobenzene	0.2	< 0.2	U
106-46-7	1,4-Dichlorobenzene	0.2	< 0.2	U
107-02-8	Acrolein	5.0	< 5.0	U
74-88-4	Methyl Iodide	1.0	< 1.0	U
74-96-4	Bromoethane	0.2	< 0.2	U
107-13-1	Acrylonitrile	1.0	< 1.0	U
563-58-6	1,1-Dichloropropene	0.2	< 0.2	U
74-95-3	Dibromomethane	0.2	< 0.2	U
630-20-6	1,1,1,2-Tetrachloroethane	0.2	< 0.2	U
96-12-8	1,2-Dibromo-3-chloropropane	0.5	< 0.5	U
96-18-4	1,2,3-Trichloropropane	0.5	< 0.5	U
110-57-6	trans-1,4-Dichloro-2-butene	1.0	< 1.0	U
108-67-8	1,3,5-Trimethylbenzene	0.2	< 0.2	U
95-63-6	1,2,4-Trimethylbenzene	0.2	< 0.2	U
87-68-3	Hexachlorobutadiene	0.5	< 0.5	U
106-93-4	Ethylene Dibromide	0.2	< 0.2	U
74-97-5	Bromochloromethane	0.2	< 0.2	U
594-20-7	2,2-Dichloropropane	0.2	< 0.2	U
142-28-9	1,3-Dichloropropane	0.2	< 0.2	U
98-82-8	Isopropylbenzene	0.2	< 0.2	U
103-65-1	n-Propylbenzene	0.2	< 0.2	U
108-86-1	Bromobenzene	0.2	< 0.2	U
95-49-8	2-Chlorotoluene	0.2	< 0.2	U
106-43-4	4-Chlorotoluene	0.2	< 0.2	U
98-06-6	tert-Butylbenzene	0.2	< 0.2	U
135-98-8	sec-Butylbenzene	0.2	< 0.2	U
99-87-6	4-Isopropyltoluene	0.2	< 0.2	U
104-51-8	n-Butylbenzene	0.2	< 0.2	U
120-82-1	1,2,4-Trichlorobenzene	0.5	< 0.5	U
91-20-3	Naphthalene	0.5	< 0.5	U
87-61-6	1,2,3-Trichlorobenzene	0.5	< 0.5	U

Reported in µg/L (ppb)

Volatile Surrogate Recovery

d4-1,2-Dichloroethane	107%
d8-Toluene	94.8%
Bromofluorobenzene	90.7%
d4-1,2-Dichlorobenzene	99.8%

2-Chloroethylvinylether is an acid labile compound and may not be recovered from an acid preserved sample.

ANALYTICAL RESOURCES INCORPORATED

ORGANICS ANALYSIS DATA SHEET
Volatiles by Purge & Trap GC/MS-Method SW8260C **Sample ID: MB-071311**
 METHOD BLANK

Lab Sample ID: MB-071311
LIMS ID: 11-15010
Matrix: Water
Data Release Authorized: VTB
Reported: 07/14/11

QC Report No: TD86-The Boeing Company
Project: NBF
025082.311
Date Sampled: NA
Date Received: NA

Instrument/Analyst: NT5/PAB
Date Analyzed: 07/13/11 13:39

Sample Amount: 10.0 mL
Purge Volume: 10.0 mL

CAS Number	Analyte	RL	Result	Q
74-87-3	Chloromethane	0.5	< 0.5	U
74-83-9	Bromomethane	1.0	< 1.0	U
75-01-4	Vinyl Chloride	0.2	< 0.2	U
75-00-3	Chloroethane	0.2	< 0.2	U
75-09-2	Methylene Chloride	0.5	< 0.5	U
67-64-1	Acetone	5.0	< 5.0	U
75-15-0	Carbon Disulfide	0.2	< 0.2	U
75-35-4	1,1-Dichloroethene	0.2	< 0.2	U
75-34-3	1,1-Dichloroethane	0.2	< 0.2	U
156-60-5	trans-1,2-Dichloroethene	0.2	< 0.2	U
156-59-2	cis-1,2-Dichloroethene	0.2	< 0.2	U
67-66-3	Chloroform	0.2	< 0.2	U
107-06-2	1,2-Dichloroethane	0.2	< 0.2	U
78-93-3	2-Butanone	5.0	< 5.0	U
71-55-6	1,1,1-Trichloroethane	0.2	< 0.2	U
56-23-5	Carbon Tetrachloride	0.2	< 0.2	U
108-05-4	Vinyl Acetate	1.0	< 1.0	U
75-27-4	Bromodichloromethane	0.2	< 0.2	U
78-87-5	1,2-Dichloropropane	0.2	< 0.2	U
10061-01-5	cis-1,3-Dichloropropene	0.2	< 0.2	U
79-01-6	Trichloroethene	0.2	< 0.2	U
124-48-1	Dibromochloromethane	0.2	< 0.2	U
79-00-5	1,1,2-Trichloroethane	0.2	< 0.2	U
71-43-2	Benzene	0.2	< 0.2	U
10061-02-6	trans-1,3-Dichloropropene	0.2	< 0.2	U
110-75-8	2-Chloroethylvinylether	1.0	< 1.0	U
75-25-2	Bromoform	0.2	< 0.2	U
108-10-1	4-Methyl-2-Pentanone (MIBK)	5.0	< 5.0	U
591-78-6	2-Hexanone	5.0	< 5.0	U
127-18-4	Tetrachloroethene	0.2	< 0.2	U
79-34-5	1,1,2,2-Tetrachloroethane	0.2	< 0.2	U
108-88-3	Toluene	0.2	< 0.2	U
108-90-7	Chlorobenzene	0.2	< 0.2	U
100-41-4	Ethylbenzene	0.2	< 0.2	U
100-42-5	Styrene	0.2	< 0.2	U
75-69-4	Trichlorofluoromethane	0.2	< 0.2	U

ANALYTICAL RESOURCES INCORPORATED

ORGANICS ANALYSIS DATA SHEET
Volatiles by Purge & Trap GC/MS-Method SW8260C **Sample ID: MB-071311**

METHOD BLANK

Lab Sample ID: MB-071311
LIMS ID: 11-15010
Matrix: Water
Date Analyzed: 07/13/11 13:39

QC Report No: TD86-The Boeing Company
Project: NBF
025082.311

CAS Number	Analyte	RL	Result	Q
76-13-1	1,1,2-Trichloro-1,2,2-trifluoroe	0.2	< 0.2	U
179601-23-1	m,p-Xylene	0.4	< 0.4	U
95-47-6	o-Xylene	0.2	< 0.2	U
95-50-1	1,2-Dichlorobenzene	0.2	< 0.2	U
541-73-1	1,3-Dichlorobenzene	0.2	< 0.2	U
106-46-7	1,4-Dichlorobenzene	0.2	< 0.2	U
107-02-8	Acrolein	5.0	< 5.0	U
74-88-4	Methyl Iodide	1.0	< 1.0	U
74-96-4	Bromoethane	0.2	< 0.2	U
107-13-1	Acrylonitrile	1.0	< 1.0	U
563-58-6	1,1-Dichloropropene	0.2	< 0.2	U
74-95-3	Dibromomethane	0.2	< 0.2	U
630-20-6	1,1,1,2-Tetrachloroethane	0.2	< 0.2	U
96-12-8	1,2-Dibromo-3-chloropropane	0.5	< 0.5	U
96-18-4	1,2,3-Trichloropropane	0.5	< 0.5	U
110-57-6	trans-1,4-Dichloro-2-butene	1.0	< 1.0	U
108-67-8	1,3,5-Trimethylbenzene	0.2	< 0.2	U
95-63-6	1,2,4-Trimethylbenzene	0.2	< 0.2	U
87-68-3	**Hexachlorobutadiene**	**0.5**	**0.7**	
106-93-4	Ethylene Dibromide	0.2	< 0.2	U
74-97-5	Bromochloromethane	0.2	< 0.2	U
594-20-7	2,2-Dichloropropane	0.2	< 0.2	U
142-28-9	1,3-Dichloropropane	0.2	< 0.2	U
98-82-8	Isopropylbenzene	0.2	< 0.2	U
103-65-1	n-Propylbenzene	0.2	< 0.2	U
108-86-1	Bromobenzene	0.2	< 0.2	U
95-49-8	2-Chlorotoluene	0.2	< 0.2	U
106-43-4	4-Chlorotoluene	0.2	< 0.2	U
98-06-6	tert-Butylbenzene	0.2	< 0.2	U
135-98-8	sec-Butylbenzene	0.2	< 0.2	U
99-87-6	4-Isopropyltoluene	0.2	< 0.2	U
104-51-8	n-Butylbenzene	0.2	< 0.2	U
120-82-1	1,2,4-Trichlorobenzene	0.5	< 0.5	U
91-20-3	Naphthalene	0.5	< 0.5	U
87-61-6	**1,2,3-Trichlorobenzene**	**0.5**	**0.7**	

Reported in µg/L (ppb)

Volatile Surrogate Recovery

d4-1,2-Dichloroethane	110%
d8-Toluene	93.7%
Bromofluorobenzene	94.5%
d4-1,2-Dichlorobenzene	102%

ANALYTICAL RESOURCES INCORPORATED

VOA SURROGATE RECOVERY SUMMARY

Matrix: Water

QC Report No: TD86-The Boeing Company
Project: NBF
025082.311

ARI ID	Client ID	PV	DCE	TOL	BFB	DCB	TOT OUT
MB-071311	Method Blank	10	110%	93.7%	94.5%	102%	0
LCS-071311	Lab Control	10	108%	95.1%	96.3%	97.0%	0
LCSD-071311	Lab Control Dup	10	108%	95.7%	99.4%	94.8%	0
TD86A	DW-01-071211	10	108%	95.2%	94.8%	99.3%	0
TD86B	DW-02-071211	10	108%	93.9%	92.5%	100%	0
TD86C	DW-03-071211	10	107%	93.4%	94.0%	102%	0
TD86D	Trip Blanks	10	107%	94.8%	90.7%	99.8%	0

SW8260C	LCS/MB LIMITS	QC LIMITS
(DCE) = d4-1,2-Dichloroethane	80-120	80-120
(TOL) = d8-Toluene	80-120	80-120
(BFB) = Bromofluorobenzene	80-120	80-120
(DCB) = d4-1,2-Dichlorobenzene	80-120	80-120

Prep Method: SW5030B
Log Number Range: 11-15010 to 11-15013

ANALYTICAL RESOURCES INCORPORATED

ORGANICS ANALYSIS DATA SHEET
Volatiles by Purge & Trap GC/MS-Method SW8260C **Sample ID: LCS-071311**

LAB CONTROL SAMPLE

Lab Sample ID: LCS-071311
LIMS ID: 11-15010
Matrix: Water
Data Release Authorized:
Reported: 07/14/11

QC Report No: TD86-The Boeing Company
Project: NBF
025082.311
Date Sampled: NA
Date Received: NA

Instrument/Analyst LCS: NT5/PAB
LCSD: NT5/PAB
Date Analyzed LCS: 07/13/11 12:42
LCSD: 07/13/11 14:45

Sample Amount LCS: 10.0 mL
LCSD: 10.0 mL
Purge Volume LCS: 10.0 mL
LCSD: 10.0 mL

Analyte	LCS	Spike Added-LCS	LCS Recovery	LCSD	Spike Added-LCSD	LCSD Recovery	RPD
Chloromethane	6.6 Q	10.0	66.0%	6.8 Q	10.0	68.0%	3.0%
Bromomethane	11.7	10.0	117%	12.9	10.0	129%	9.8%
Vinyl Chloride	8.0	10.0	80.0%	8.1	10.0	81.0%	1.2%
Chloroethane	8.3	10.0	83.0%	8.4	10.0	84.0%	1.2%
Methylene Chloride	9.1	10.0	91.0%	9.3	10.0	93.0%	2.2%
Acetone	63.4 Q	50.0	127%	52.8 Q	50.0	106%	18.2%
Carbon Disulfide	10.2	10.0	102%	10.1	10.0	101%	1.0%
1,1-Dichloroethene	11.3	10.0	113%	11.0	10.0	110%	2.7%
1,1-Dichloroethane	9.3	10.0	93.0%	9.6	10.0	96.0%	3.2%
trans-1,2-Dichloroethene	9.9	10.0	99.0%	10.2	10.0	102%	3.0%
cis-1,2-Dichloroethene	8.8	10.0	88.0%	9.1	10.0	91.0%	3.4%
Chloroform	10.0	10.0	100%	10.3	10.0	103%	3.0%
1,2-Dichloroethane	12.8 Q	10.0	128%	12.6 Q	10.0	126%	1.6%
2-Butanone	42.7	50.0	85.4%	47.6	50.0	95.2%	10.9%
1,1,1-Trichloroethane	11.1	10.0	111%	11.4	10.0	114%	2.7%
Carbon Tetrachloride	13.9 Q	10.0	139%	13.9 Q	10.0	139%	0.0%
Vinyl Acetate	8.6	10.0	86.0%	8.9	10.0	89.0%	3.4%
Bromodichloromethane	11.1	10.0	111%	11.2	10.0	112%	0.9%
1,2-Dichloropropane	8.7	10.0	87.0%	8.8	10.0	88.0%	1.1%
cis-1,3-Dichloropropene	10.4	10.0	104%	10.9	10.0	109%	4.7%
Trichloroethene	11.0	10.0	110%	11.3	10.0	113%	2.7%
Dibromochloromethane	11.5 Q	10.0	115%	12.1 Q	10.0	121%	5.1%
1,1,2-Trichloroethane	10.5	10.0	105%	10.6	10.0	106%	0.9%
Benzene	9.6	10.0	96.0%	9.7	10.0	97.0%	1.0%
trans-1,3-Dichloropropene	11.6	10.0	116%	11.9	10.0	119%	2.6%
2-Chloroethylvinylether	9.8	10.0	98.0%	9.6	10.0	96.0%	2.1%
Bromoform	12.5 Q	10.0	125%	12.3 Q	10.0	123%	1.6%
4-Methyl-2-Pentanone (MIBK)	51.5	50.0	103%	52.2	50.0	104%	1.4%
2-Hexanone	58.0 Q	50.0	116%	60.8 Q	50.0	122%	4.7%
Tetrachloroethene	11.0	10.0	110%	11.6	10.0	116%	5.3%
1,1,2,2-Tetrachloroethane	9.0	10.0	90.0%	9.0	10.0	90.0%	0.0%
Toluene	10.2	10.0	102%	10.8	10.0	108%	5.7%
Chlorobenzene	10.4	10.0	104%	10.7	10.0	107%	2.8%
Ethylbenzene	10.5	10.0	105%	11.0	10.0	110%	4.7%
Styrene	9.1	10.0	91.0%	9.3	10.0	93.0%	2.2%
Trichlorofluoromethane	14.2 Q	10.0	142%	14.2 Q	10.0	142%	0.0%
1,1,2-Trichloro-1,2,2-trifluoroetha	10.7	10.0	107%	10.9	10.0	109%	1.9%
m,p-Xylene	22.0	20.0	110%	22.5	20.0	112%	2.2%

ANALYTICAL RESOURCES INCORPORATED

ORGANICS ANALYSIS DATA SHEET
Volatiles by Purge & Trap GC/MS-Method SW8260C **Sample ID: LCS-071311**

LAB CONTROL SAMPLE

Lab Sample ID: LCS-071311
LIMS ID: 11-15010
Matrix: Water

QC Report No: TD86-The Boeing Company
Project: NBF
025082.311

Analyte	LCS	Spike Added-LCS	LCS Recovery	LCSD	Spike Added-LCSD	LCSD Recovery	RPD
o-Xylene	10.5	10.0	105%	11.1	10.0	111%	5.6%
1,2-Dichlorobenzene	10.0	10.0	100%	9.9	10.0	99.0%	1.0%
1,3-Dichlorobenzene	10.4	10.0	104%	10.4	10.0	104%	0.0%
1,4-Dichlorobenzene	10.3	10.0	103%	10.1	10.0	101%	2.0%
Acrolein	46.9	50.0	93.8%	42.2	50.0	84.4%	10.5%
Methyl Iodide	11.2	10.0	112%	11.3	10.0	113%	0.9%
Bromoethane	9.5	10.0	95.0%	9.7	10.0	97.0%	2.1%
Acrylonitrile	8.2	10.0	82.0%	10.7	10.0	107%	26.5%
1,1-Dichloropropene	10.7	10.0	107%	10.9	10.0	109%	1.9%
Dibromomethane	10.8	10.0	108%	11.2	10.0	112%	3.6%
1,1,1,2-Tetrachloroethane	11.7	10.0	117%	12.0	10.0	120%	2.5%
1,2-Dibromo-3-chloropropane	10.0	10.0	100%	10.1	10.0	101%	1.0%
1,2,3-Trichloropropane	10.7	10.0	107%	10.9	10.0	109%	1.9%
trans-1,4-Dichloro-2-butene	10.8	10.0	108%	11.5	10.0	115%	6.3%
1,3,5-Trimethylbenzene	10.7	10.0	107%	10.6	10.0	106%	0.9%
1,2,4-Trimethylbenzene	10.6	10.0	106%	10.5	10.0	105%	0.9%
Hexachlorobutadiene	10.3	10.0	103%	10.3	10.0	103%	0.0%
Ethylene Dibromide	10.9	10.0	109%	10.9	10.0	109%	0.0%
Bromochloromethane	10.4	10.0	104%	10.4	10.0	104%	0.0%
2,2-Dichloropropane	11.0	10.0	110%	11.2	10.0	112%	1.8%
1,3-Dichloropropane	9.6	10.0	96.0%	10.0	10.0	100%	4.1%
Isopropylbenzene	10.6	10.0	106%	10.4	10.0	104%	1.9%
n-Propylbenzene	10.0	10.0	100%	10.0	10.0	100%	0.0%
Bromobenzene	10.9	10.0	109%	10.8	10.0	108%	0.9%
2-Chlorotoluene	10.2	10.0	102%	10.2	10.0	102%	0.0%
4-Chlorotoluene	10.3	10.0	103%	10.2	10.0	102%	1.0%
tert-Butylbenzene	10.4	10.0	104%	10.3	10.0	103%	1.0%
sec-Butylbenzene	8.6	10.0	86.0%	8.4	10.0	84.0%	2.4%
4-Isopropyltoluene	8.7	10.0	87.0%	8.6	10.0	86.0%	1.2%
n-Butylbenzene	9.5	10.0	95.0%	9.4	10.0	94.0%	1.1%
1,2,4-Trichlorobenzene	10.6	10.0	106%	10.8	10.0	108%	1.9%
Naphthalene	11.2	10.0	112%	11.4	10.0	114%	1.8%
1,2,3-Trichlorobenzene	11.8	10.0	118%	11.6	10.0	116%	1.7%

Reported in µg/L (ppb)

RPD calculated using sample concentrations per SW846.

Volatile Surrogate Recovery

	LCS	LCSD
d4-1,2-Dichloroethane	108%	108%
d8-Toluene	95.1%	95.7%
Bromofluorobenzene	96.3%	99.4%
d4-1,2-Dichlorobenzene	97.0%	94.8%

ANALYTICAL RESOURCES INCORPORATED

ORGANICS ANALYSIS DATA SHEET
PCB by GC/ECD Method SW8082

Sample ID: DW-01-071211
SAMPLE

Lab Sample ID: TD86A
LIMS ID: 11-15010
Matrix: Water
Data Release Authorized: VM
Reported: 07/14/11

QC Report No: TD86-The Boeing Company
Project: NBF
025082.311
Date Sampled: 07/12/11
Date Received: 07/12/11

Date Extracted: 07/13/11
Date Analyzed: 07/14/11 08:10
Instrument/Analyst: ECD7/JGR
GPC Cleanup: No
Sulfur Cleanup: Yes

Sample Amount: 1000 mL
Final Extract Volume: 0.50 mL
Dilution Factor: 1.00
Silica Gel: Yes
Acid Cleanup: Yes

CAS Number	Analyte	RL	Result
12674-11-2	Aroclor 1016	0.010	< 0.010 U
53469-21-9	Aroclor 1242	0.010	< 0.010 U
12672-29-6	Aroclor 1248	0.010	< 0.010 U
11097-69-1	Aroclor 1254	0.010	< 0.010 U
11096-82-5	Aroclor 1260	0.010	< 0.010 U
11104-28-2	Aroclor 1221	0.010	< 0.010 U
11141-16-5	Aroclor 1232	0.010	< 0.010 U
37324-23-5	Aroclor 1262	0.010	< 0.010 U

Reported in µg/L (ppb)

PCB Surrogate Recovery

Decachlorobiphenyl	66.2%
Tetrachlorometaxylene	55.8%

ANALYTICAL RESOURCES INCORPORATED

ORGANICS ANALYSIS DATA SHEET
PCB by GC/ECD Method SW8082

Sample ID: DW-02-071211
SAMPLE

Lab Sample ID: TD86B
LIMS ID: 11-15011
Matrix: Water
Data Release Authorized: VD
Reported: 07/14/11

QC Report No: TD86-The Boeing Company
Project: NBF
025082.311
Date Sampled: 07/12/11
Date Received: 07/12/11

Date Extracted: 07/13/11
Date Analyzed: 07/14/11 08:33
Instrument/Analyst: ECD7/JGR
GPC Cleanup: No
Sulfur Cleanup: Yes

Sample Amount: 1000 mL
Final Extract Volume: 0.50 mL
Dilution Factor: 1.00
Silica Gel: Yes
Acid Cleanup: Yes

CAS Number	Analyte	RL	Result
12674-11-2	Aroclor 1016	0.010	< 0.010 U
53469-21-9	Aroclor 1242	0.010	< 0.010 U
12672-29-6	Aroclor 1248	0.010	< 0.010 U
11097-69-1	Aroclor 1254	0.010	< 0.010 U
11096-82-5	Aroclor 1260	0.010	< 0.010 U
11104-28-2	Aroclor 1221	0.010	< 0.010 U
11141-16-5	Aroclor 1232	0.010	< 0.010 U
37324-23-5	Aroclor 1262	0.010	< 0.010 U

Reported in µg/L (ppb)

PCB Surrogate Recovery

Decachlorobiphenyl	60.0%
Tetrachlorometaxylene	52.2%

ANALYTICAL RESOURCES INCORPORATED

ORGANICS ANALYSIS DATA SHEET
PCB by GC/ECD Method SW8082

Sample ID: DW-03-071211
SAMPLE

Lab Sample ID: TD86C
LIMS ID: 11-15012
Matrix: Water
Data Release Authorized: VD
Reported: 07/14/11

QC Report No: TD86-The Boeing Company
Project: NBF
025082.311
Date Sampled: 07/12/11
Date Received: 07/12/11

Date Extracted: 07/13/11
Date Analyzed: 07/14/11 08:56
Instrument/Analyst: ECD7/JGR
GPC Cleanup: No
Sulfur Cleanup: Yes

Sample Amount: 1000 mL
Final Extract Volume: 0.50 mL
Dilution Factor: 1.00
Silica Gel: Yes
Acid Cleanup: Yes

CAS Number	Analyte	RL	Result
12674-11-2	Aroclor 1016	0.010	< 0.010 U
53469-21-9	Aroclor 1242	0.010	< 0.010 U
12672-29-6	Aroclor 1248	0.010	< 0.010 U
11097-69-1	Aroclor 1254	0.010	< 0.010 U
11096-82-5	Aroclor 1260	0.010	< 0.010 U
11104-28-2	Aroclor 1221	0.010	< 0.010 U
11141-16-5	Aroclor 1232	0.010	< 0.010 U
37324-23-5	Aroclor 1262	0.010	< 0.010 U

Reported in µg/L (ppb)

PCB Surrogate Recovery

Decachlorobiphenyl	75.8%
Tetrachlorometaxylene	60.8%

ANALYTICAL RESOURCES INCORPORATED

ORGANICS ANALYSIS DATA SHEET
PCB by GC/ECD Method SW8082

Sample ID: MB-071311
METHOD BLANK

Lab Sample ID: MB-071311
LIMS ID: 11-15010
Matrix: Water
Data Release Authorized: VD
Reported: 07/14/11

QC Report No: TD86-The Boeing Company
Project: NBF
025082.311
Date Sampled: NA
Date Received: NA

Date Extracted: 07/13/11
Date Analyzed: 07/14/11 09:18
Instrument/Analyst: ECD7/JGR
GPC Cleanup: No
Sulfur Cleanup: Yes

Sample Amount: 1000 mL
Final Extract Volume: 0.50 mL
Dilution Factor: 1.00
Silica Gel: Yes
Acid Cleanup: Yes

CAS Number	Analyte	RL	Result
12674-11-2	Aroclor 1016	0.010	< 0.010 U
53469-21-9	Aroclor 1242	0.010	< 0.010 U
12672-29-6	Aroclor 1248	0.010	< 0.010 U
11097-69-1	Aroclor 1254	0.010	< 0.010 U
11096-82-5	Aroclor 1260	0.010	< 0.010 U
11104-28-2	Aroclor 1221	0.010	< 0.010 U
11141-16-5	Aroclor 1232	0.010	< 0.010 U
37324-23-5	Aroclor 1262	0.010	< 0.010 U

Reported in µg/L (ppb)

PCB Surrogate Recovery

Decachlorobiphenyl	76.5%
Tetrachlorometaxylene	62.5%

ANALYTICAL RESOURCES INCORPORATED

SW8082/PCB WATER SURROGATE RECOVERY SUMMARY

Matrix: Water

QC Report No: TD86-The Boeing Company
Project: NBF
025082.311

Client ID	DCBP % REC	DCBP LCL-UCL	TCMX % REC	TCMX LCL-UCL	TOT OUT
MB-071311	76.5%	32-108	62.5%	31-100	0
LCS-071311	77.0%	32-108	60.5%	31-100	0
LCSD-071311	81.0%	32-108	60.0%	31-100	0
DW-01-071211	66.2%	19-111	55.8%	21-100	0
DW-02-071211	60.0%	19-111	52.2%	21-100	0
DW-03-071211	75.8%	19-111	60.8%	21-100	0

Prep Method: SW3510C
Log Number Range: 11-15010 to 11-15012

FORM-II SW8082

ANALYTICAL RESOURCES INCORPORATED

ORGANICS ANALYSIS DATA SHEET
PCB by GC/ECD Method SW8082

Sample ID: LCS-071311
LCS/LCSD

Lab Sample ID: LCS-071311
LIMS ID: 11-15010
Matrix: Water
Data Release Authorized: VJS
Reported: 07/14/11

QC Report No: TD86-The Boeing Company
Project: NBF
025082.311
Date Sampled: NA
Date Received: NA

Date Extracted LCS/LCSD: 07/13/11

Date Analyzed LCS: 07/14/11 09:41
LCSD: 07/14/11 10:04
Instrument/Analyst LCS: ECD7/JGR
LCSD: ECD7/JGR
GPC Cleanup: No
Sulfur Cleanup: Yes

Sample Amount LCS: 1000 mL
LCSD: 1000 mL
Final Extract Volume LCS: 0.50 mL
LCSD: 0.50 mL
Dilution Factor LCS: 1.00
LCSD: 1.00
Silica Gel: Yes
Acid Cleanup: Yes

Analyte	LCS	Spike Added-LCS	LCS Recovery	LCSD	Spike Added-LCSD	LCSD Recovery	RPD
Aroclor 1016	0.043	0.050	86.0%	0.043	0.050	86.0%	0.0%
Aroclor 1260	0.047	0.050	94.0%	0.046	0.050	92.0%	2.2%

PCB Surrogate Recovery

	LCS	LCSD
Decachlorobiphenyl	77.0%	81.0%
Tetrachlorometaxylene	60.5%	60.0%

Results reported in µg/L
RPD calculated using sample concentrations per SW846.

ANALYTICAL RESOURCES INCORPORATED

ORGANICS ANALYSIS DATA SHEET
TPHG by Method NWTPHG
Matrix: Water

Data Release Authorized: VB
Reported: 07/14/11

QC Report No: TD86-The Boeing Company
Project: NBF
Event: 025082.311
Date Sampled: 07/12/11
Date Received: 07/12/11

ARI ID	Client ID	Analysis Date	DL	Range	Result
MB-071411	Method Blank	07/14/11	1.0	Gasoline	< 0.25 U
11-15010		PID1		HC ID	---
				Trifluorotoluene	99.8%
				Bromobenzene	98.9%
TD86A	DW-01-071211	07/14/11	1.0	Gasoline	< 0.25 U
11-15010		PID1		HC ID	---
				Trifluorotoluene	106%
				Bromobenzene	101%
TD86B	DW-02-071211	07/14/11	1.0	Gasoline	< 0.25 U
11-15011		PID1		HC ID	---
				Trifluorotoluene	107%
				Bromobenzene	103%
TD86C	DW-03-071211	07/14/11	1.0	Gasoline	< 0.25 U
11-15012		PID1		HC ID	---
				Trifluorotoluene	108%
				Bromobenzene	104%
TD86D	Trip Blanks	07/14/11	1.0	Gasoline	< 0.25 U
11-15013		PID1		HC ID	---
				Trifluorotoluene	107%
				Bromobenzene	104%

Gasoline values reported in mg/L (ppm)

Quantitation on total peaks in the gasoline range from Toluene to Naphthalene.

GAS: Indicates the presence of gasoline or weathered gasoline.
GRO: Positive result that does not match an identifiable gasoline pattern.

ANALYTICAL RESOURCES INCORPORATED

TPHG WATER SURROGATE RECOVERY SUMMARY

ARI Job: TD86
Matrix: Water

QC Report No: TD86-The Boeing Company
Project: NBF
Event: 025082.311

Client ID	TFT	BBZ	TOT OUT
MB-071411	99.8%	98.9%	0
LCS-071411	109%	103%	0
LCSD-071411	110%	105%	0
DW-01-071211	106%	101%	0
DW-02-071211	107%	103%	0
DW-03-071211	108%	104%	0
Trip Blanks	107%	104%	0

	LCS/MB LIMITS	QC LIMITS
(TFT) = Trifluorotoluene	(80-120)	(80-120)
(BBZ) = Bromobenzene	(80-120)	(80-120)

Log Number Range: 11-15010 to 11-15013

FORM II TPHG

ANALYTICAL RESOURCES INCORPORATED

ORGANICS ANALYSIS DATA SHEET
TPHG by Method NWTPHG

Sample ID: LCS-071411
LAB CONTROL SAMPLE

Lab Sample ID: LCS-071411
LIMS ID: 11-15010
Matrix: Water
Data Release Authorized: VJB
Reported: 07/14/11

QC Report No: TD86-The Boeing Company
Project: NBF
Event: 025082.311
Date Sampled: NA
Date Received: NA

Date Analyzed LCS: 07/14/11 06:52
LCSD: 07/14/11 07:22
Instrument/Analyst LCS: PID1/MH
LCSD: PID1/MH

Purge Volume: 5.0 mL

Dilution Factor LCS: 1.0
LCSD: 1.0

Analyte	LCS	Spike Added-LCS	LCS Recovery	LCSD	Spike Added-LCSD	LCSD Recovery	RPD
Gasoline Range Hydrocarbons	1.05	1.00	105%	1.03	1.00	103%	1.9%

Reported in mg/L (ppm)

RPD calculated using sample concentrations per SW846.

TPHG Surrogate Recovery

	LCS	LCSD
Trifluorotoluene	109%	110%
Bromobenzene	103%	105%

ANALYTICAL RESOURCES INCORPORATED

ORGANICS ANALYSIS DATA SHEET
TOTAL DIESEL RANGE HYDROCARBONS
NWTPHD by GC/FID-Silica and Acid Cleaned

Matrix: Water

QC Report No: TD86-The Boeing Company
Project: NBF
025082.311

Data Release Authorized: VB
Reported: 07/14/11

ARI ID	Sample ID	Extraction Date	Analysis Date	EFV DL	Range	RL	Result
MB-071311	Method Blank	07/13/11	07/13/11	1.00	Diesel	0.10	< 0.10 U
11-15010	HC ID: ---		FID4A	1.0	Motor Oil	0.20	< 0.20 U
					o-Terphenyl		117%
TD86A	DW-01-071211	07/13/11	07/13/11	1.00	Diesel	0.10	< 0.10 U
11-15010	HC ID: ---		FID4A	1.0	Motor Oil	0.20	< 0.20 U
					o-Terphenyl		111%
TD86B	DW-02-071211	07/13/11	07/13/11	1.00	Diesel	0.10	< 0.10 U
11-15011	HC ID: ---		FID4A	1.0	Motor Oil	0.20	< 0.20 U
					o-Terphenyl		118%
TD86C	DW-03-071211	07/13/11	07/13/11	1.00	Diesel	0.10	< 0.10 U
11-15012	HC ID: ---		FID4A	1.0	Motor Oil	0.20	< 0.20 U
					o-Terphenyl		112%

Reported in mg/L (ppm)

EFV-Effective Final Volume in mL.
DL-Dilution of extract prior to analysis.
RL-Reporting limit.

Diesel quantitation on total peaks in the range from C12 to C24.
Motor Oil quantitation on total peaks in the range from C24 to C38.
HC ID: DRO/RRO indicate results of organics or additional hydrocarbons in ranges are not identifiable.

ANALYTICAL RESOURCES INCORPORATED

CLEANED TPHD SURROGATE RECOVERY SUMMARY

Matrix: Water

QC Report No: TD86-The Boeing Company
Project: NBF
025082.311

Client ID	OTER	TOT OUT
MB-071311	117%	0
LCS-071311	103%	0
LCSD-071311	105%	0
DW-01-071211	111%	0
DW-02-071211	118%	0
DW-03-071211	112%	0

	LCS/MB LIMITS	QC LIMITS
(OTER) = o-Terphenyl	(50-150)	(50-150)

Prep Method: SW3510C
Log Number Range: 11-15010 to 11-15012

FORM-II TPHD

ANALYTICAL RESOURCES INCORPORATED

ORGANICS ANALYSIS DATA SHEET
NWTPHD by GC/FID-Silica and Acid Cleaned

Sample ID: LCS-071311
LCS/LCSD

Lab Sample ID: LCS-071311
LIMS ID: 11-15010
Matrix: Water
Data Release Authorized: VB
Reported: 07/14/11

QC Report No: TD86-The Boeing Company
Project: NBF
025082.311
Date Sampled: 07/12/11
Date Received: 07/12/11

Date Extracted LCS/LCSD: 07/13/11

Date Analyzed LCS: 07/13/11 19:32
LCSD: 07/13/11 19:55
Instrument/Analyst LCS: FID/MS
LCSD: FID/MS

Sample Amount LCS: 500 mL
LCSD: 500 mL
Final Extract Volume LCS: 1.0 mL
LCSD: 1.0 mL
Dilution Factor LCS: 1.00
LCSD: 1.00

Range	LCS	Spike Added-LCS	LCS Recovery	LCSD	Spike Added-LCSD	LCSD Recovery	RPD
Diesel	2.65	3.00	88.3%	2.70	3.00	90.0%	1.9%

TPHD Surrogate Recovery

	LCS	LCSD
o-Terphenyl	103%	105%

Results reported in mg/L
RPD calculated using sample concentrations per SW846.

ANALYTICAL RESOURCES INCORPORATED

TOTAL DIESEL RANGE HYDROCARBONS-EXTRACTION REPORT

ARI Job: TD86
Project: NBF 025082.311

Matrix: Water
Date Received: 07/12/11

ARI ID	Client ID	Samp Amt	Final Vol	Prep Date
11-15010-071311MB1	Method Blank	500 mL	1.00 mL	07/13/11
11-15010-071311LCS1	Lab Control	500 mL	1.00 mL	07/13/11
11-15010-071311LCSD1	Lab Control Dup	500 mL	1.00 mL	07/13/11
11-15010-TD86A	DW-01-071211	500 mL	1.00 mL	07/13/11
11-15011-TD86B	DW-02-071211	500 mL	1.00 mL	07/13/11
11-15012-TD86C	DW-03-071211	500 mL	1.00 mL	07/13/11

ANALYTICAL RESOURCES INCORPORATED

INORGANICS ANALYSIS DATA SHEET
DISSOLVED METALS

Sample ID: DW-01-071211
SAMPLE

Lab Sample ID: TD86A
LIMS ID: 11-15010
Matrix: Water
Data Release Authorized
Reported: 07/15/11

QC Report No: TD86-The Boeing Company
Project: NBF
025082.311
Date Sampled: 07/12/11
Date Received: 07/12/11

Prep Meth	Prep Date	Analysis Method	Analysis Date	CAS Number	Analyte	RL	µg/L	Q
200.8	07/13/11	200.8	07/14/11	**7440-38-2**	**Arsenic**	0.2	**0.4**	
200.8	07/13/11	200.8	07/14/11	7440-43-9	Cadmium	0.1	0.1	U
200.8	07/13/11	200.8	07/14/11	**7440-47-3**	**Chromium**	0.5	**0.8**	
200.8	07/13/11	200.8	07/14/11	**7440-50-8**	**Copper**	0.5	**0.6**	
200.8	07/13/11	200.8	07/14/11	7439-92-1	Lead	0.1	0.1	U
7470A	07/14/11	7470A	07/14/11	7439-97-6	Mercury	0.1	0.1	U
200.8	07/13/11	200.8	07/14/11	**7440-02-0**	**Nickel**	0.5	**1.3**	
200.8	07/13/11	200.8	07/14/11	7440-66-6	Zinc	4	4	U

U-Analyte undetected at given RL
RL-Reporting Limit

ANALYTICAL RESOURCES INCORPORATED

INORGANICS ANALYSIS DATA SHEET
DISSOLVED METALS

Sample ID: DW-02-071211
SAMPLE

Lab Sample ID: TD86B
LIMS ID: 11-15011
Matrix: Water
Data Release Authorized:
Reported: 07/15/11

QC Report No: TD86-The Boeing Company
Project: NBF
025082.311
Date Sampled: 07/12/11
Date Received: 07/12/11

Prep Meth	Prep Date	Analysis Method	Analysis Date	CAS Number	Analyte	RL	µg/L	Q
200.8	07/13/11	200.8	07/14/11	**7440-38-2**	**Arsenic**	0.2	**1.1**	
200.8	07/13/11	200.8	07/14/11	7440-43-9	Cadmium	0.1	0.1	U
200.8	07/13/11	200.8	07/14/11	7440-47-3	Chromium	0.5	0.5	U
200.8	07/13/11	200.8	07/14/11	7440-50-8	Copper	0.5	0.5	U
200.8	07/13/11	200.8	07/14/11	**7439-92-1**	**Lead**	0.1	**0.1**	
7470A	07/14/11	7470A	07/14/11	7439-97-6	Mercury	0.1	0.1	U
200.8	07/13/11	200.8	07/14/11	**7440-02-0**	**Nickel**	0.5	**1.5**	
200.8	07/13/11	200.8	07/14/11	7440-66-6	Zinc	4	4	U

U-Analyte undetected at given RL
RL-Reporting Limit

ANALYTICAL RESOURCES INCORPORATED

INORGANICS ANALYSIS DATA SHEET
DISSOLVED METALS

Sample ID: DW-03-071211
SAMPLE

Lab Sample ID: TD86C
LIMS ID: 11-15012
Matrix: Water
Data Release Authorized
Reported: 07/15/11

QC Report No: TD86-The Boeing Company
Project: NBF
025082.311
Date Sampled: 07/12/11
Date Received: 07/12/11

Prep Meth	Prep Date	Analysis Method	Analysis Date	CAS Number	Analyte	RL	µg/L	Q
200.8	07/13/11	200.8	07/14/11	**7440-38-2**	**Arsenic**	0.2	**5.6**	
200.8	07/13/11	200.8	07/14/11	7440-43-9	Cadmium	0.1	0.1	U
200.8	07/13/11	200.8	07/14/11	**7440-47-3**	**Chromium**	0.5	**0.7**	
200.8	07/13/11	200.8	07/14/11	**7440-50-8**	**Copper**	0.5	**2.8**	
200.8	07/13/11	200.8	07/14/11	**7439-92-1**	**Lead**	0.1	**0.1**	
7470A	07/14/11	7470A	07/14/11	7439-97-6	Mercury	0.1	0.1	U
200.8	07/13/11	200.8	07/14/11	**7440-02-0**	**Nickel**	0.5	**2.7**	
200.8	07/13/11	200.8	07/14/11	7440-66-6	Zinc	4	4	U

U-Analyte undetected at given RL
RL-Reporting Limit

ANALYTICAL RESOURCES INCORPORATED

INORGANICS ANALYSIS DATA SHEET
DISSOLVED METALS

Sample ID: METHOD BLANK

Lab Sample ID: TD86MB
LIMS ID: 11-15010
Matrix: Water
Data Release Authorized:
Reported: 07/15/11

QC Report No: TD86-The Boeing Company
Project: NBF
025082.311
Date Sampled: NA
Date Received: NA

Prep Meth	Prep Date	Analysis Method	Analysis Date	CAS Number	Analyte	RL	µg/L	Q
200.8	07/13/11	200.8	07/14/11	7440-38-2	Arsenic	0.2	0.2	U
200.8	07/13/11	200.8	07/14/11	7440-43-9	Cadmium	0.1	0.1	U
200.8	07/13/11	200.8	07/14/11	7440-47-3	Chromium	0.5	0.5	U
200.8	07/13/11	200.8	07/14/11	7440-50-8	Copper	0.5	0.5	U
200.8	07/13/11	200.8	07/14/11	7439-92-1	Lead	0.1	0.1	U
7470A	07/14/11	7470A	07/14/11	7439-97-6	Mercury	0.1	0.1	U
200.8	07/13/11	200.8	07/14/11	7440-02-0	Nickel	0.5	0.5	U
200.8	07/13/11	200.8	07/14/11	7440-66-6	Zinc	4	4	U

U-Analyte undetected at given RL
RL-Reporting Limit

ANALYTICAL RESOURCES INCORPORATED

INORGANICS ANALYSIS DATA SHEET
DISSOLVED METALS

Sample ID: LAB CONTROL

Lab Sample ID: TD86LCS
LIMS ID: 11-15010
Matrix: Water
Data Release Authorized:
Reported: 07/15/11

QC Report No: TD86-The Boeing Company
Project: NBF
025082.311
Date Sampled: NA
Date Received: NA

BLANK SPIKE QUALITY CONTROL REPORT

Analyte	Analysis Method	Spike Found	Spike Added	% Recovery	Q
Arsenic	200.8	24.6	25.0	98.4%	
Cadmium	200.8	25.5	25.0	102%	
Chromium	200.8	25.3	25.0	101%	
Copper	200.8	27.1	25.0	108%	
Lead	200.8	25.7	25.0	103%	
Mercury	7470A	2.3	2.0	115%	
Nickel	200.8	26.0	25.0	104%	
Zinc	200.8	82	80	102%	

Reported in µg/L

N-Control limit not met
Control Limits: 80-120%

Analytical Resources, Incorporated
Analytical Chemists and Consultants

July 19, 2011

Kris Hendrickson
Landau Associates, Inc.
130 Second Ave
Edmonds, WA 98020

RE: Project: NBF – Dewatering Wells 025082.311
ARI Job: TE13

Dear Kris:

Please find enclosed the Chain of Custody (COC) record, sample receipt documentation, and analytical results for the above referenced project. Analytical Resources, Inc. (ARI) accepted three water samples and a trip blank in good condition on July 14, 2011. Two coolers were received with temperatures of 8.3 and 11.4°C.

The samples were analyzed for PCBs, VOCs, NWTPH-Gx, NWTPH-Dx and Dissolved Metals, as requested on the COC.

There were no irregularities with the samples.

Quality control analysis results are included for your review. Copies of the reports and all associated raw data will be kept on file electronically at ARI. If you have any questions or require additional information, please contact me at your convenience.

Sincerely,
ANALYTICAL RESOURCES, INC

Kelly Bottem
Client Services Manager
(206) 695-6211
kellyb@arilabs.com
www.arilabs.com

cc: Carl Bach, The Boeing Company, P.O. Box 3707, M/S 1W-12, Seattle, WA 98124-2207

4611 South 134th Place, Suite 100 • Tukwila WA 98168 • **206-695-6200** • **206-695-6201** fax

LANDAU ASSOCIATES

- [x] Seattle/Edmonds (425) 778-0907
- [ ] Tacoma (253) 926-2493
- [ ] Spokane (509) 327-9737
- [ ] Portland (503) 542-1080
- [ ] _____

TE13

Date 7/14/11

Page 1 of 1

Chain-of-Custody Record

Project Name North Boeing Field Project No. 025082.311

Project Location/Event Seattle, WA/Dewatering Well Samples

Sampler's Name Dylan Frazer/Colette Griffith

Project Contact Carl Bach/Kris Hendrickson

Send Results To Carl Bach/Kris Hendrickson/Anne Halvorsen

Turnaround Time
- [ ] Standard
- [x] Accelerated 24 hr (if possible)

Testing Parameters

Sample I.D.	Date	Time	Matrix	No. of Containers	Dissolved metals*	VOCs	PCBs (low level)	TPH-Dx	TPH-Gx
DW-04-071411	7/14/11	1400	H2O	10	X	X	X	X	X
DW-05-071411	7/14/11	1445	H2O	10	X	X	X	X	X
DW-06-071411	7/14/11	1600	H2O	10	X	X	X	X	X
Trip Blanks	7/14/11		H2O	2		X			X

Observations/Comments

~~X Allow water samples to settle, collect aliquot from clear portion~~ (cmg)

X NWTPH-Dx - run acid wash/silica gel cleanup

___ run samples standardized to _____ product

___ Analyze for EPH if no specific product identified

VOC/BTEX/VPH (soil):
___ non-preserved
___ preserved w/methanol
___ preserved w/sodium bisulfate
___ Freeze upon receipt

___ Dissolved metal water samples field filtered

Other * Field filtered, Arsenic, cadmium, chromium, copper, lead, mercury, nickel, zinc

Special Shipment/Handling or Storage Requirements Drop off

Method of Shipment

Relinquished by	Received by	Relinquished by	Received by
Signature [signature]	Signature [signature]	Signature	Signature
Printed Name Colette Griffith	Printed Name A. Volgardsen	Printed Name	Printed Name
Company Landau	Company ARI	Company	Company
Date 7/14/11 Time 1615	Date 7/14/11 Time 1615	Date Time	Date Time

WHITE COPY - Project File YELLOW COPY - Laboratory PINK COPY - Client Representative

Rev 8/09

TE13.000002

Analytical Resources, Incorporated
Analytical Chemists and Consultants

Cooler Receipt Form

ARI Client: Boeing

Project Name: NBF

COC No(s): _____ (NA)

Delivered by Fed-Ex UPS Courier Hand Delivered Other: _____

Assigned ARI Job No: TD86

Tracking No: _____ (NA)

Preliminary Examination Phase:

Were intact, properly signed and dated custody seals attached to the outside of to cooler?	(YES)	NO
Were custody papers included with the cooler?	(YES)	NO
Were custody papers properly filled out (ink, signed, etc.)	(YES)	NO

Temperature of Cooler(s) (°C) (recommended 2.0-6.0 °C for chemistry): 11.4 8.3 ___ ___

If cooler temperature is out of compliance fill out form 00070F

Temp Gun ID#: 90941619

Cooler Accepted by: AV Date: 7/14/11 Time: 1615

Complete custody forms and attach all shipping documents

Log-In Phase:

Was a temperature blank included in the cooler?		YES	(NO)
What kind of packing material was used?	Bubble Wrap (Wet Ice) Gel Packs Baggies (Foam Block) Paper Other: _____		
Was sufficient ice used (if appropriate)?	NA	YES	(NO)
Were all bottles sealed in individual plastic bags?		YES	(NO)
Did all bottles arrive in good condition (unbroken)?		(YES)	NO
Were all bottle labels complete and legible?		(YES)	NO
Did the number of containers listed on COC match with the number of containers received?		(YES)	NO
Did all bottle labels and tags agree with custody papers?		(YES)	NO
Were all bottles used correct for the requested analyses?		(YES)	NO
Do any of the analyses (bottles) require preservation? (attach preservation sheet, excluding VOCs)	NA	(YES)	NO
Were all VOC vials free of air bubbles?	NA	YES	(NO)
Was sufficient amount of sample sent in each bottle?		(YES)	NO
Date VOC Trip Blank was made at ARI.	NA	7/13/11	

Was Sample Split by ARI: (NA) YES Date/Time: _____ Equipment: _____ Split by: _____

Samples Logged by: AV Date: 7/14/11 Time: 1655

***** Notify Project Manager of discrepancies or concerns *****

Sample ID on Bottle	Sample ID on COC	Sample ID on Bottle	Sample ID on COC

Additional Notes, Discrepancies, & Resolutions:

DW-OS-071411 = 1pb

By: Date

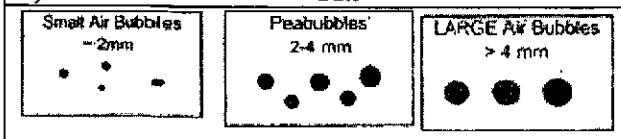

Small → "sm"
Peabubbles → "pb"
Large → "lg"
Headspace → "hs"

TE13:00003

Analytical Resources, Incorporated
Analytical Chemists and Consultants

Cooler Temperature Compliance Form

Cooler#: 122 Temperature(°C): 11.4, 8.3

Sample ID	Bottle Count	Bottle Type
All samples arrived out of temp compliance		

Not sampled 7/14/11 AD.

Cooler#: Temperature(°C):

Sample ID	Bottle Count	Bottle Type

Cooler#: Temperature(°C):

Sample ID	Bottle Count	Bottle Type

Cooler#: Temperature(°C):

Sample ID	Bottle Count	Bottle Type

Completed by: AV Date: 7/14/11 Time: 1700

Sample ID Cross Reference Report

ANALYTICAL RESOURCES INCORPORATED

ARI Job No: TE13
Client: The Boeing Company
Project Event: 025082.311
Project Name: NBF

	Sample ID	ARI Lab ID	ARI LIMS ID	Matrix	Sample Date/Time	VTSR
1.	DW-04-071411	TE13A	11-15151	Water	07/14/11 14:00	07/14/11 16:15
2.	DW-05-071411	TE13B	11-15152	Water	07/14/11 14:45	07/14/11 16:15
3.	DW-06-071411	TE13C	11-15153	Water	07/14/11 16:00	07/14/11 16:15
4.	Trip Blanks	TE13D	11-15154	Water	07/14/11	07/14/11 16:15

Printed 07/14/11

PRESERVATION VERIFICATION 07/14/11

ANALYTICAL RESOURCES INCORPORATED

ARI Job No: **TE13**

Inquiry Number: NONE
Analysis Requested: 07/15/11
Contact: Bach,Carl
Client: The Boeing Company
Logged by: AV
Sample Set Used: Yes-481
Validatable Package: No
Deliverables:

PC: Kelly
VTSR: 07/14/11

Project #: 025082.311
Project: NBF
Sample Site:
SDG No:
Analytical Protocol: In-house

LOGNUM ARI ID	CLIENT ID	CN >12	WAD >12	NH3 <2	COD <2	FOG <2	MET <2	PHEN <2	PHOS <2	TKN <2	NO23 <2	TOC <2	S2 >9	AK102 <2	Fe2+ <2	DMET FLT	DOC FLT	PARAMETER	ADJUSTED TO	LOT NUMBER	AMOUNT ADDED	DATE/BY
11-15151 **TE13A**	DW-04-071411						DIS									Y						
11-15152 **TE13B**	DW-05-071411						DIS									Y						
11-15153 **TE13C**	DW-06-071411						DIS									Y						

Checked By AV Date 7/14/11

Data Reporting Qualifiers

Effective 2/14/2011

Inorganic Data

U Indicates that the target analyte was not detected at the reported concentration

* Duplicate RPD is not within established control limits

B Reported value is less than the CRDL but ≥ the Reporting Limit

N Matrix Spike recovery not within established control limits

NA Not Applicable, analyte not spiked

H The natural concentration of the spiked element is so much greater than the concentration spiked that an accurate determination of spike recovery is not possible

L Analyte concentration is ≤5 times the Reporting Limit and the replicate control limit defaults to ±1 RL instead of the normal 20% RPD

Organic Data

U Indicates that the target analyte was not detected at the reported concentration

* Flagged value is not within established control limits

B Analyte detected in an associated Method Blank at a concentration greater than one-half of ARI's Reporting Limit or 5% of the regulatory limit or 5% of the analyte concentration in the sample.

J Estimated concentration when the value is less than ARI's established reporting limits

D The spiked compound was not detected due to sample extract dilution

E Estimated concentration calculated for an analyte response above the valid instrument calibration range. A dilution is required to obtain an accurate quantification of the analyte.

Q Indicates a detected analyte with an initial or continuing calibration that does not meet established acceptance criteria (<20%RSD, <20%Drift or minimum RRF).

TE13 : 00067

S Indicates an analyte response that has saturated the detector. The calculated concentration is not valid; a dilution is required to obtain valid quantification of the analyte

NA The flagged analyte was not analyzed for

NR Spiked compound recovery is not reported due to chromatographic interference

NS The flagged analyte was not spiked into the sample

M Estimated value for an analyte detected and confirmed by an analyst but with low spectral match parameters. This flag is used only for GC-MS analyses

M2 The sample contains PCB congeners that do not match any standard Aroclor pattern. The PCBs are identified and quantified as the Aroclor whose pattern most closely matches that of the sample. The reported value is an estimate.

N The analysis indicates the presence of an analyte for which there is presumptive evidence to make a "tentative identification"

Y The analyte is not detected at or above the reported concentration. The reporting limit is raised due to chromatographic interference. The Y flag is equivalent to the U flag with a raised reporting limit.

EMPC Estimated Maximum Possible Concentration (EMPC) defined in EPA Statement of Work DLM02.2 as a value "calculated for 2,3,7,8-substituted isomers for which the quantitation and /or confirmation ion(s) has signal to noise in excess of 2.5, but does not meet identification criteria" **(Dioxin/Furan analysis only)**

C The analyte was positively identified on only one of two chromatographic columns. Chromatographic interference prevented a positive identification on the second column

P The analyte was detected on both chromatographic columns but the quantified values differ by ≥40% RPD with no obvious chromatographic interference

X Analyte signal includes interference from polychlorinated diphenyl ethers. **(Dioxin/Furan analysis only)**

Z Analyte signal includes interference from the sample matrix or perfluorokerosene ions. **(Dioxin/Furan analysis only)**

Geotechnical Data

A	The total of all fines fractions. This flag is used to report total fines when only sieve analysis is requested and balances total grain size with sample weight.
F	Samples were frozen prior to particle size determination
SM	Sample matrix was not appropriate for the requested analysis. This normally refers to samples contaminated with an organic product that interferes with the sieving process and/or moisture content, porosity and saturation calculations
SS	Sample did not contain the proportion of "fines" required to perform the pipette portion of the grain size analysis
W	Weight of sample in some pipette aliquots was below the level required for accurate weighting

TE13 : 00009

ANALYTICAL RESOURCES INCORPORATED

ORGANICS ANALYSIS DATA SHEET
Volatiles by Purge & Trap GC/MS-Method SW8260C **Sample ID: DW-04-071411**
 SAMPLE

Lab Sample ID: TE13A
LIMS ID: 11-15151
Matrix: Water
Data Release Authorized: VI
Reported: 07/15/11

QC Report No: TE13-The Boeing Company
Project: NBF
025082.311
Date Sampled: 07/14/11
Date Received: 07/14/11

Instrument/Analyst: NT3/PKC
Date Analyzed: 07/15/11 13:19

Sample Amount: 10.0 mL
Purge Volume: 10.0 mL

CAS Number	Analyte	RL	Result	Q
74-87-3	Chloromethane	0.5	< 0.5	U
74-83-9	Bromomethane	1.0	< 1.0	U
75-01-4	Vinyl Chloride	0.2	< 0.2	U
75-00-3	Chloroethane	0.2	< 0.2	U
75-09-2	Methylene Chloride	0.5	< 0.5	U
67-64-1	Acetone	5.0	< 5.0	U
75-15-0	Carbon Disulfide	0.2	< 0.2	U
75-35-4	1,1-Dichloroethene	0.2	< 0.2	U
75-34-3	1,1-Dichloroethane	0.2	< 0.2	U
156-60-5	trans-1,2-Dichloroethene	0.2	< 0.2	U
156-59-2	**cis-1,2-Dichloroethene**	**0.2**	**2.2**	
67-66-3	**Chloroform**	**0.2**	**0.8**	
107-06-2	1,2-Dichloroethane	0.2	< 0.2	U
78-93-3	2-Butanone	5.0	< 5.0	U
71-55-6	1,1,1-Trichloroethane	0.2	< 0.2	U
56-23-5	**Carbon Tetrachloride**	**0.2**	**0.2**	
108-05-4	Vinyl Acetate	1.0	< 1.0	U
75-27-4	Bromodichloromethane	0.2	< 0.2	U
78-87-5	1,2-Dichloropropane	0.2	< 0.2	U
10061-01-5	cis-1,3-Dichloropropene	0.2	< 0.2	U
79-01-6	**Trichloroethene**	**0.2**	**4.0**	
124-48-1	Dibromochloromethane	0.2	< 0.2	U
79-00-5	1,1,2-Trichloroethane	0.2	< 0.2	U
71-43-2	Benzene	0.2	< 0.2	U
10061-02-6	trans-1,3-Dichloropropene	0.2	< 0.2	U
110-75-8	2-Chloroethylvinylether	1.0	< 1.0	U
75-25-2	Bromoform	0.2	< 0.2	U
108-10-1	4-Methyl-2-Pentanone (MIBK)	5.0	< 5.0	U
591-78-6	2-Hexanone	5.0	< 5.0	U
127-18-4	**Tetrachloroethene**	**0.2**	**6.4**	
79-34-5	1,1,2,2-Tetrachloroethane	0.2	< 0.2	U
108-88-3	Toluene	0.2	< 0.2	U
108-90-7	Chlorobenzene	0.2	< 0.2	U
100-41-4	Ethylbenzene	0.2	< 0.2	U
100-42-5	Styrene	0.2	< 0.2	U
75-69-4	Trichlorofluoromethane	0.2	< 0.2	U

ANALYTICAL RESOURCES INCORPORATED

ORGANICS ANALYSIS DATA SHEET
Volatiles by Purge & Trap GC/MS-Method SW8260C **Sample ID: DW-04-071411**
 SAMPLE

Lab Sample ID: TE13A
LIMS ID: 11-15151
Matrix: Water
Date Analyzed: 07/15/11 13:19

QC Report No: TE13-The Boeing Company
Project: NBF
025082.311

CAS Number	Analyte	RL	Result	Q
76-13-1	1,1,2-Trichloro-1,2,2-trifluoroe	0.2	< 0.2	U
179601-23-1	m,p-Xylene	0.4	< 0.4	U
95-47-6	o-Xylene	0.2	< 0.2	U
95-50-1	1,2-Dichlorobenzene	0.2	< 0.2	U
541-73-1	1,3-Dichlorobenzene	0.2	< 0.2	U
106-46-7	1,4-Dichlorobenzene	0.2	< 0.2	U
107-02-8	Acrolein	5.0	< 5.0	U
74-88-4	Methyl Iodide	1.0	< 1.0	U
74-96-4	Bromoethane	0.2	< 0.2	U
107-13-1	Acrylonitrile	1.0	< 1.0	U
563-58-6	1,1-Dichloropropene	0.2	< 0.2	U
74-95-3	Dibromomethane	0.2	< 0.2	U
630-20-6	1,1,1,2-Tetrachloroethane	0.2	< 0.2	U
96-12-8	1,2-Dibromo-3-chloropropane	0.5	< 0.5	U
96-18-4	1,2,3-Trichloropropane	0.5	< 0.5	U
110-57-6	trans-1,4-Dichloro-2-butene	1.0	< 1.0	U
108-67-8	1,3,5-Trimethylbenzene	0.2	< 0.2	U
95-63-6	1,2,4-Trimethylbenzene	0.2	< 0.2	U
87-68-3	Hexachlorobutadiene	0.5	< 0.5	U
106-93-4	Ethylene Dibromide	0.2	< 0.2	U
74-97-5	Bromochloromethane	0.2	< 0.2	U
594-20-7	2,2-Dichloropropane	0.2	< 0.2	U
142-28-9	1,3-Dichloropropane	0.2	< 0.2	U
98-82-8	Isopropylbenzene	0.2	< 0.2	U
103-65-1	n-Propylbenzene	0.2	< 0.2	U
108-86-1	Bromobenzene	0.2	< 0.2	U
95-49-8	2-Chlorotoluene	0.2	< 0.2	U
106-43-4	4-Chlorotoluene	0.2	< 0.2	U
98-06-6	tert-Butylbenzene	0.2	< 0.2	U
135-98-8	sec-Butylbenzene	0.2	< 0.2	U
99-87-6	4-Isopropyltoluene	0.2	< 0.2	U
104-51-8	n-Butylbenzene	0.2	< 0.2	U
120-82-1	1,2,4-Trichlorobenzene	0.5	< 0.5	U
91-20-3	Naphthalene	0.5	< 0.5	U
87-61-6	1,2,3-Trichlorobenzene	0.5	< 0.5	U

Reported in µg/L (ppb)

Volatile Surrogate Recovery

d4-1,2-Dichloroethane	98.9%
d8-Toluene	97.0%
Bromofluorobenzene	99.6%
d4-1,2-Dichlorobenzene	102%

2-Chloroethylvinylether is an acid labile compound and may not be recovered from an acid preserved sample.

ANALYTICAL RESOURCES INCORPORATED

ORGANICS ANALYSIS DATA SHEET
Volatiles by Purge & Trap GC/MS-Method SW8260C **Sample ID: DW-05-071411**
 SAMPLE

Lab Sample ID: TE13B
LIMS ID: 11-15152
Matrix: Water
Data Release Authorized: VTB
Reported: 07/15/11

QC Report No: TE13-The Boeing Company
Project: NBF
025082.311
Date Sampled: 07/14/11
Date Received: 07/14/11

Instrument/Analyst: NT3/PKC
Date Analyzed: 07/15/11 13:45

Sample Amount: 10.0 mL
Purge Volume: 10.0 mL

CAS Number	Analyte	RL	Result	Q
74-87-3	Chloromethane	0.5	< 0.5	U
74-83-9	Bromomethane	1.0	< 1.0	U
75-01-4	Vinyl Chloride	0.2	< 0.2	U
75-00-3	Chloroethane	0.2	< 0.2	U
75-09-2	Methylene Chloride	0.5	< 0.5	U
67-64-1	Acetone	5.0	< 5.0	U
75-15-0	Carbon Disulfide	0.2	< 0.2	U
75-35-4	1,1-Dichloroethene	0.2	< 0.2	U
75-34-3	1,1-Dichloroethane	0.2	< 0.2	U
156-60-5	trans-1,2-Dichloroethene	0.2	< 0.2	U
156-59-2	**cis-1,2-Dichloroethene**	**0.2**	**0.6**	
67-66-3	**Chloroform**	**0.2**	**0.5**	
107-06-2	1,2-Dichloroethane	0.2	< 0.2	U
78-93-3	2-Butanone	5.0	< 5.0	U
71-55-6	1,1,1-Trichloroethane	0.2	< 0.2	U
56-23-5	Carbon Tetrachloride	0.2	< 0.2	U
108-05-4	Vinyl Acetate	1.0	< 1.0	U
75-27-4	Bromodichloromethane	0.2	< 0.2	U
78-87-5	1,2-Dichloropropane	0.2	< 0.2	U
10061-01-5	cis-1,3-Dichloropropene	0.2	< 0.2	U
79-01-6	Trichloroethene	0.2	< 0.2	U
124-48-1	Dibromochloromethane	0.2	< 0.2	U
79-00-5	1,1,2-Trichloroethane	0.2	< 0.2	U
71-43-2	Benzene	0.2	< 0.2	U
10061-02-6	trans-1,3-Dichloropropene	0.2	< 0.2	U
110-75-8	2-Chloroethylvinylether	1.0	< 1.0	U
75-25-2	Bromoform	0.2	< 0.2	U
108-10-1	4-Methyl-2-Pentanone (MIBK)	5.0	< 5.0	U
591-78-6	2-Hexanone	5.0	< 5.0	U
127-18-4	Tetrachloroethene	0.2	< 0.2	U
79-34-5	1,1,2,2-Tetrachloroethane	0.2	< 0.2	U
108-88-3	Toluene	0.2	< 0.2	U
108-90-7	Chlorobenzene	0.2	< 0.2	U
100-41-4	Ethylbenzene	0.2	< 0.2	U
100-42-5	Styrene	0.2	< 0.2	U
75-69-4	Trichlorofluoromethane	0.2	< 0.2	U

ANALYTICAL RESOURCES INCORPORATED

ORGANICS ANALYSIS DATA SHEET
Volatiles by Purge & Trap GC/MS-Method SW8260C **Sample ID: DW-05-071411**
 SAMPLE

Lab Sample ID: TE13B
LIMS ID: 11-15152
Matrix: Water
Date Analyzed: 07/15/11 13:45

QC Report No: TE13-The Boeing Company
Project: NBF
025082.311

CAS Number	Analyte	RL	Result	Q
76-13-1	1,1,2-Trichloro-1,2,2-trifluoroe	0.2	< 0.2	U
179601-23-1	m,p-Xylene	0.4	< 0.4	U
95-47-6	o-Xylene	0.2	< 0.2	U
95-50-1	1,2-Dichlorobenzene	0.2	< 0.2	U
541-73-1	1,3-Dichlorobenzene	0.2	< 0.2	U
106-46-7	1,4-Dichlorobenzene	0.2	< 0.2	U
107-02-8	Acrolein	5.0	< 5.0	U
74-88-4	Methyl Iodide	1.0	< 1.0	U
74-96-4	Bromoethane	0.2	< 0.2	U
107-13-1	Acrylonitrile	1.0	< 1.0	U
563-58-6	1,1-Dichloropropene	0.2	< 0.2	U
74-95-3	Dibromomethane	0.2	< 0.2	U
630-20-6	1,1,1,2-Tetrachloroethane	0.2	< 0.2	U
96-12-8	1,2-Dibromo-3-chloropropane	0.5	< 0.5	U
96-18-4	1,2,3-Trichloropropane	0.5	< 0.5	U
110-57-6	trans-1,4-Dichloro-2-butene	1.0	< 1.0	U
108-67-8	1,3,5-Trimethylbenzene	0.2	< 0.2	U
95-63-6	1,2,4-Trimethylbenzene	0.2	< 0.2	U
87-68-3	Hexachlorobutadiene	0.5	< 0.5	U
106-93-4	Ethylene Dibromide	0.2	< 0.2	U
74-97-5	Bromochloromethane	0.2	< 0.2	U
594-20-7	2,2-Dichloropropane	0.2	< 0.2	U
142-28-9	1,3-Dichloropropane	0.2	< 0.2	U
98-82-8	Isopropylbenzene	0.2	< 0.2	U
103-65-1	n-Propylbenzene	0.2	< 0.2	U
108-86-1	Bromobenzene	0.2	< 0.2	U
95-49-8	2-Chlorotoluene	0.2	< 0.2	U
106-43-4	4-Chlorotoluene	0.2	< 0.2	U
98-06-6	tert-Butylbenzene	0.2	< 0.2	U
135-98-8	sec-Butylbenzene	0.2	< 0.2	U
99-87-6	4-Isopropyltoluene	0.2	< 0.2	U
104-51-8	n-Butylbenzene	0.2	< 0.2	U
120-82-1	1,2,4-Trichlorobenzene	0.5	< 0.5	U
91-20-3	Naphthalene	0.5	< 0.5	U
87-61-6	1,2,3-Trichlorobenzene	0.5	< 0.5	U

Reported in µg/L (ppb)

Volatile Surrogate Recovery

d4-1,2-Dichloroethane	102%
d8-Toluene	98.1%
Bromofluorobenzene	97.7%
d4-1,2-Dichlorobenzene	101%

2-Chloroethylvinylether is an acid labile compound and may not be recovered from an acid preserved sample.

ANALYTICAL RESOURCES INCORPORATED

ORGANICS ANALYSIS DATA SHEET
Volatiles by Purge & Trap GC/MS-Method SW8260C **Sample ID: DW-06-071411**
 SAMPLE

Lab Sample ID: TE13C
LIMS ID: 11-15153
Matrix: Water
Data Release Authorized: VTJ
Reported: 07/15/11

QC Report No: TE13-The Boeing Company
Project: NBF
025082.311
Date Sampled: 07/14/11
Date Received: 07/14/11

Instrument/Analyst: NT3/PKC
Date Analyzed: 07/15/11 14:11

Sample Amount: 10.0 mL
Purge Volume: 10.0 mL

CAS Number	Analyte	RL	Result	Q
74-87-3	Chloromethane	0.5	< 0.5	U
74-83-9	Bromomethane	1.0	< 1.0	U
75-01-4	Vinyl Chloride	0.2	< 0.2	U
75-00-3	Chloroethane	0.2	< 0.2	U
75-09-2	Methylene Chloride	0.5	< 0.5	U
67-64-1	Acetone	5.0	< 5.0	U
75-15-0	Carbon Disulfide	0.2	< 0.2	U
75-35-4	1,1-Dichloroethene	0.2	< 0.2	U
75-34-3	1,1-Dichloroethane	0.2	< 0.2	U
156-60-5	trans-1,2-Dichloroethene	0.2	< 0.2	U
156-59-2	**cis-1,2-Dichloroethene**	**0.2**	**1.8**	
67-66-3	**Chloroform**	**0.2**	**0.3**	
107-06-2	1,2-Dichloroethane	0.2	< 0.2	U
78-93-3	2-Butanone	5.0	< 5.0	U
71-55-6	1,1,1-Trichloroethane	0.2	< 0.2	U
56-23-5	Carbon Tetrachloride	0.2	< 0.2	U
108-05-4	Vinyl Acetate	1.0	< 1.0	U
75-27-4	Bromodichloromethane	0.2	< 0.2	U
78-87-5	1,2-Dichloropropane	0.2	< 0.2	U
10061-01-5	cis-1,3-Dichloropropene	0.2	< 0.2	U
79-01-6	**Trichloroethene**	**0.2**	**0.9**	
124-48-1	Dibromochloromethane	0.2	< 0.2	U
79-00-5	1,1,2-Trichloroethane	0.2	< 0.2	U
71-43-2	Benzene	0.2	< 0.2	U
10061-02-6	trans-1,3-Dichloropropene	0.2	< 0.2	U
110-75-8	2-Chloroethylvinylether	1.0	< 1.0	U
75-25-2	Bromoform	0.2	< 0.2	U
108-10-1	4-Methyl-2-Pentanone (MIBK)	5.0	< 5.0	U
591-78-6	2-Hexanone	5.0	< 5.0	U
127-18-4	Tetrachloroethene	0.2	< 0.2	U
79-34-5	1,1,2,2-Tetrachloroethane	0.2	< 0.2	U
108-88-3	Toluene	0.2	< 0.2	U
108-90-7	Chlorobenzene	0.2	< 0.2	U
100-41-4	Ethylbenzene	0.2	< 0.2	U
100-42-5	Styrene	0.2	< 0.2	U
75-69-4	Trichlorofluoromethane	0.2	< 0.2	U

ANALYTICAL RESOURCES INCORPORATED

ORGANICS ANALYSIS DATA SHEET
Volatiles by Purge & Trap GC/MS-Method SW8260C **Sample ID: DW-06-071411**
 SAMPLE

Lab Sample ID: TE13C
LIMS ID: 11-15153
Matrix: Water
Date Analyzed: 07/15/11 14:11

QC Report No: TE13-The Boeing Company
Project: NBF
025082.311

CAS Number	Analyte	RL	Result	Q
76-13-1	1,1,2-Trichloro-1,2,2-trifluoroe	0.2	< 0.2	U
179601-23-1	m,p-Xylene	0.4	< 0.4	U
95-47-6	o-Xylene	0.2	< 0.2	U
95-50-1	1,2-Dichlorobenzene	0.2	< 0.2	U
541-73-1	1,3-Dichlorobenzene	0.2	< 0.2	U
106-46-7	1,4-Dichlorobenzene	0.2	< 0.2	U
107-02-8	Acrolein	5.0	< 5.0	U
74-88-4	Methyl Iodide	1.0	< 1.0	U
74-96-4	Bromoethane	0.2	< 0.2	U
107-13-1	Acrylonitrile	1.0	< 1.0	U
563-58-6	1,1-Dichloropropene	0.2	< 0.2	U
74-95-3	Dibromomethane	0.2	< 0.2	U
630-20-6	1,1,1,2-Tetrachloroethane	0.2	< 0.2	U
96-12-8	1,2-Dibromo-3-chloropropane	0.5	< 0.5	U
96-18-4	1,2,3-Trichloropropane	0.5	< 0.5	U
110-57-6	trans-1,4-Dichloro-2-butene	1.0	< 1.0	U
108-67-8	1,3,5-Trimethylbenzene	0.2	< 0.2	U
95-63-6	1,2,4-Trimethylbenzene	0.2	< 0.2	U
87-68-3	Hexachlorobutadiene	0.5	< 0.5	U
106-93-4	Ethylene Dibromide	0.2	< 0.2	U
74-97-5	Bromochloromethane	0.2	< 0.2	U
594-20-7	2,2-Dichloropropane	0.2	< 0.2	U
142-28-9	1,3-Dichloropropane	0.2	< 0.2	U
98-82-8	Isopropylbenzene	0.2	< 0.2	U
103-65-1	n-Propylbenzene	0.2	< 0.2	U
108-86-1	Bromobenzene	0.2	< 0.2	U
95-49-8	2-Chlorotoluene	0.2	< 0.2	U
106-43-4	4-Chlorotoluene	0.2	< 0.2	U
98-06-6	tert-Butylbenzene	0.2	< 0.2	U
135-98-8	sec-Butylbenzene	0.2	< 0.2	U
99-87-6	4-Isopropyltoluene	0.2	< 0.2	U
104-51-8	n-Butylbenzene	0.2	< 0.2	U
120-82-1	1,2,4-Trichlorobenzene	0.5	< 0.5	U
91-20-3	Naphthalene	0.5	< 0.5	U
87-61-6	1,2,3-Trichlorobenzene	0.5	< 0.5	U

Reported in µg/L (ppb)

Volatile Surrogate Recovery

d4-1,2-Dichloroethane	98.8%
d8-Toluene	99.7%
Bromofluorobenzene	98.6%
d4-1,2-Dichlorobenzene	99.9%

2-Chloroethylvinylether is an acid labile compound and may not be recovered from an acid preserved sample.

ANALYTICAL RESOURCES INCORPORATED

ORGANICS ANALYSIS DATA SHEET
Volatiles by Purge & Trap GC/MS-Method SW8260C **Sample ID: Trip Blanks**
 SAMPLE

Lab Sample ID: TE13D
LIMS ID: 11-15154
Matrix: Water
Data Release Authorized: VT
Reported: 07/15/11

QC Report No: TE13-The Boeing Company
Project: NBF
025082.311
Date Sampled: 07/14/11
Date Received: 07/14/11

Instrument/Analyst: NT3/PKC
Date Analyzed: 07/15/11 11:31

Sample Amount: 10.0 mL
Purge Volume: 10.0 mL

CAS Number	Analyte	RL	Result	Q
74-87-3	Chloromethane	0.5	< 0.5	U
74-83-9	Bromomethane	1.0	< 1.0	U
75-01-4	Vinyl Chloride	0.2	< 0.2	U
75-00-3	Chloroethane	0.2	< 0.2	U
75-09-2	Methylene Chloride	0.5	< 0.5	U
67-64-1	Acetone	5.0	< 5.0	U
75-15-0	Carbon Disulfide	0.2	< 0.2	U
75-35-4	1,1-Dichloroethene	0.2	< 0.2	U
75-34-3	1,1-Dichloroethane	0.2	< 0.2	U
156-60-5	trans-1,2-Dichloroethene	0.2	< 0.2	U
156-59-2	cis-1,2-Dichloroethene	0.2	< 0.2	U
67-66-3	Chloroform	0.2	< 0.2	U
107-06-2	1,2-Dichloroethane	0.2	< 0.2	U
78-93-3	2-Butanone	5.0	< 5.0	U
71-55-6	1,1,1-Trichloroethane	0.2	< 0.2	U
56-23-5	Carbon Tetrachloride	0.2	< 0.2	U
108-05-4	Vinyl Acetate	1.0	< 1.0	U
75-27-4	Bromodichloromethane	0.2	< 0.2	U
78-87-5	1,2-Dichloropropane	0.2	< 0.2	U
10061-01-5	cis-1,3-Dichloropropene	0.2	< 0.2	U
79-01-6	Trichloroethene	0.2	< 0.2	U
124-48-1	Dibromochloromethane	0.2	< 0.2	U
79-00-5	1,1,2-Trichloroethane	0.2	< 0.2	U
71-43-2	Benzene	0.2	< 0.2	U
10061-02-6	trans-1,3-Dichloropropene	0.2	< 0.2	U
110-75-8	2-Chloroethylvinylether	1.0	< 1.0	U
75-25-2	Bromoform	0.2	< 0.2	U
108-10-1	4-Methyl-2-Pentanone (MIBK)	5.0	< 5.0	U
591-78-6	2-Hexanone	5.0	< 5.0	U
127-18-4	Tetrachloroethene	0.2	< 0.2	U
79-34-5	1,1,2,2-Tetrachloroethane	0.2	< 0.2	U
108-88-3	Toluene	0.2	< 0.2	U
108-90-7	Chlorobenzene	0.2	< 0.2	U
100-41-4	Ethylbenzene	0.2	< 0.2	U
100-42-5	Styrene	0.2	< 0.2	U
75-69-4	Trichlorofluoromethane	0.2	< 0.2	U

ANALYTICAL RESOURCES INCORPORATED

ORGANICS ANALYSIS DATA SHEET
Volatiles by Purge & Trap GC/MS-Method SW8260C

Sample ID: Trip Blanks
SAMPLE

Lab Sample ID: TE13D
LIMS ID: 11-15154
Matrix: Water
Date Analyzed: 07/15/11 11:31

QC Report No: TE13-The Boeing Company
Project: NBF
025082.311

CAS Number	Analyte	RL	Result	Q
76-13-1	1,1,2-Trichloro-1,2,2-trifluoroe	0.2	< 0.2	U
179601-23-1	m,p-Xylene	0.4	< 0.4	U
95-47-6	o-Xylene	0.2	< 0.2	U
95-50-1	1,2-Dichlorobenzene	0.2	< 0.2	U
541-73-1	1,3-Dichlorobenzene	0.2	< 0.2	U
106-46-7	1,4-Dichlorobenzene	0.2	< 0.2	U
107-02-8	Acrolein	5.0	< 5.0	U
74-88-4	Methyl Iodide	1.0	< 1.0	U
74-96-4	Bromoethane	0.2	< 0.2	U
107-13-1	Acrylonitrile	1.0	< 1.0	U
563-58-6	1,1-Dichloropropene	0.2	< 0.2	U
74-95-3	Dibromomethane	0.2	< 0.2	U
630-20-6	1,1,1,2-Tetrachloroethane	0.2	< 0.2	U
96-12-8	1,2-Dibromo-3-chloropropane	0.5	< 0.5	U
96-18-4	1,2,3-Trichloropropane	0.5	< 0.5	U
110-57-6	trans-1,4-Dichloro-2-butene	1.0	< 1.0	U
108-67-8	1,3,5-Trimethylbenzene	0.2	< 0.2	U
95-63-6	1,2,4-Trimethylbenzene	0.2	< 0.2	U
87-68-3	Hexachlorobutadiene	0.5	< 0.5	U
106-93-4	Ethylene Dibromide	0.2	< 0.2	U
74-97-5	Bromochloromethane	0.2	< 0.2	U
594-20-7	2,2-Dichloropropane	0.2	< 0.2	U
142-28-9	1,3-Dichloropropane	0.2	< 0.2	U
98-82-8	Isopropylbenzene	0.2	< 0.2	U
103-65-1	n-Propylbenzene	0.2	< 0.2	U
108-86-1	Bromobenzene	0.2	< 0.2	U
95-49-8	2-Chlorotoluene	0.2	< 0.2	U
106-43-4	4-Chlorotoluene	0.2	< 0.2	U
98-06-6	tert-Butylbenzene	0.2	< 0.2	U
135-98-8	sec-Butylbenzene	0.2	< 0.2	U
99-87-6	4-Isopropyltoluene	0.2	< 0.2	U
104-51-8	n-Butylbenzene	0.2	< 0.2	U
120-82-1	1,2,4-Trichlorobenzene	0.5	< 0.5	U
91-20-3	Naphthalene	0.5	< 0.5	U
87-61-6	1,2,3-Trichlorobenzene	0.5	< 0.5	U

Reported in µg/L (ppb)

Volatile Surrogate Recovery

d4-1,2-Dichloroethane	97.4%
d8-Toluene	101%
Bromofluorobenzene	101%
d4-1,2-Dichlorobenzene	100%

2-Chloroethylvinylether is an acid labile compound and may not be recovered from an acid preserved sample.

ANALYTICAL RESOURCES INCORPORATED

VOA SURROGATE RECOVERY SUMMARY

Matrix: Water

QC Report No: TE13-The Boeing Company
Project: NBF
025082.311

ARI ID	Client ID	PV	DCE	TOL	BFB	DCB	TOT OUT
MB-071511	Method Blank	10	105%	98.7%	102%	102%	0
LCS-071511	Lab Control	10	101%	100%	101%	99.3%	0
LCSD-071511	Lab Control Dup	10	102%	101%	99.9%	101%	0
TE13A	DW-04-071411	10	98.9%	97.0%	99.6%	102%	0
TE13B	DW-05-071411	10	102%	98.1%	97.7%	101%	0
TE13C	DW-06-071411	10	98.8%	99.7%	98.6%	99.9%	0
TE13D	Trip Blanks	10	97.4%	101%	101%	100%	0

SW8260C	LCS/MB LIMITS	QC LIMITS
(DCE) = d4-1,2-Dichloroethane	80-120	80-120
(TOL) = d8-Toluene	80-120	80-120
(BFB) = Bromofluorobenzene	80-120	80-120
(DCB) = d4-1,2-Dichlorobenzene	80-120	80-120

Prep Method: SW5030B
Log Number Range: 11-15151 to 11-15154

ANALYTICAL RESOURCES INCORPORATED

ORGANICS ANALYSIS DATA SHEET
Volatiles by Purge & Trap GC/MS-Method SW8260C **Sample ID: LCS-071511**
 LAB CONTROL SAMPLE

Lab Sample ID: LCS-071511
LIMS ID: 11-15151
Matrix: Water
Data Release Authorized: VJB
Reported: 07/15/11

QC Report No: TE13-The Boeing Company
Project: NBF
025082.311
Date Sampled: NA
Date Received: NA

Instrument/Analyst LCS: NT3/PKC
LCSD: NT3/PKC
Date Analyzed LCS: 07/15/11 10:05
LCSD: 07/15/11 10:32

Sample Amount LCS: 10.0 mL
LCSD: 10.0 mL
Purge Volume LCS: 10.0 mL
LCSD: 10.0 mL

Analyte	LCS	Spike Added-LCS	LCS Recovery	LCSD	Spike Added-LCSD	LCSD Recovery	RPD
Chloromethane	9.6	10.0	96.0%	9.2	10.0	92.0%	4.3%
Bromomethane	9.7	10.0	97.0%	9.5	10.0	95.0%	2.1%
Vinyl Chloride	9.7	10.0	97.0%	9.4	10.0	94.0%	3.1%
Chloroethane	9.9	10.0	99.0%	9.5	10.0	95.0%	4.1%
Methylene Chloride	9.2	10.0	92.0%	9.2	10.0	92.0%	0.0%
Acetone	52.4	50.0	105%	53.2	50.0	106%	1.5%
Carbon Disulfide	9.6	10.0	96.0%	9.4	10.0	94.0%	2.1%
1,1-Dichloroethene	9.5	10.0	95.0%	9.4	10.0	94.0%	1.1%
1,1-Dichloroethane	9.9	10.0	99.0%	9.5	10.0	95.0%	4.1%
trans-1,2-Dichloroethene	9.5	10.0	95.0%	9.5	10.0	95.0%	0.0%
cis-1,2-Dichloroethene	9.8	10.0	98.0%	9.6	10.0	96.0%	2.1%
Chloroform	9.7	10.0	97.0%	9.6	10.0	96.0%	1.0%
1,2-Dichloroethane	9.9	10.0	99.0%	9.9	10.0	99.0%	0.0%
2-Butanone	52.9	50.0	106%	53.2	50.0	106%	0.6%
1,1,1-Trichloroethane	9.9	10.0	99.0%	9.6	10.0	96.0%	3.1%
Carbon Tetrachloride	9.5	10.0	95.0%	9.5	10.0	95.0%	0.0%
Vinyl Acetate	9.9	10.0	99.0%	9.8	10.0	98.0%	1.0%
Bromodichloromethane	10.2	10.0	102%	10.2	10.0	102%	0.0%
1,2-Dichloropropane	9.4	10.0	94.0%	9.2	10.0	92.0%	2.2%
cis-1,3-Dichloropropene	10.3	10.0	103%	10.0	10.0	100%	3.0%
Trichloroethene	9.6	10.0	96.0%	9.4	10.0	94.0%	2.1%
Dibromochloromethane	10.3	10.0	103%	10.4	10.0	104%	1.0%
1,1,2-Trichloroethane	9.7	10.0	97.0%	9.7	10.0	97.0%	0.0%
Benzene	9.8	10.0	98.0%	9.7	10.0	97.0%	1.0%
trans-1,3-Dichloropropene	10.2	10.0	102%	10.3	10.0	103%	1.0%
2-Chloroethylvinylether	10.0	10.0	100%	10.1	10.0	101%	1.0%
Bromoform	10.1	10.0	101%	10.5	10.0	105%	3.9%
4-Methyl-2-Pentanone (MIBK)	49.6	50.0	99.2%	49.8	50.0	99.6%	0.4%
2-Hexanone	50.9	50.0	102%	51.2	50.0	102%	0.6%
Tetrachloroethene	9.7	10.0	97.0%	9.3	10.0	93.0%	4.2%
1,1,2,2-Tetrachloroethane	10.1	10.0	101%	9.9	10.0	99.0%	2.0%
Toluene	9.9	10.0	99.0%	9.3	10.0	93.0%	6.2%
Chlorobenzene	9.8	10.0	98.0%	9.5	10.0	95.0%	3.1%
Ethylbenzene	9.8	10.0	98.0%	9.4	10.0	94.0%	4.2%
Styrene	10.1	10.0	101%	9.8	10.0	98.0%	3.0%
Trichlorofluoromethane	9.8	10.0	98.0%	9.3	10.0	93.0%	5.2%
1,1,2-Trichloro-1,2,2-trifluoroetha	10.0	10.0	100%	9.2	10.0	92.0%	8.3%
m,p-Xylene	19.6	20.0	98.0%	19.1	20.0	95.5%	2.6%

ANALYTICAL RESOURCES INCORPORATED

ORGANICS ANALYSIS DATA SHEET
Volatiles by Purge & Trap GC/MS-Method SW8260C **Sample ID: LCS-071511**
 LAB CONTROL SAMPLE

Lab Sample ID: LCS-071511
LIMS ID: 11-15151
Matrix: Water

QC Report No: TE13-The Boeing Company
Project: NBF
025082.311

Analyte	LCS	Spike Added-LCS	LCS Recovery	LCSD	Spike Added-LCSD	LCSD Recovery	RPD
o-Xylene	9.7	10.0	97.0%	9.4	10.0	94.0%	3.1%
1,2-Dichlorobenzene	9.4	10.0	94.0%	9.3	10.0	93.0%	1.1%
1,3-Dichlorobenzene	9.4	10.0	94.0%	9.2	10.0	92.0%	2.2%
1,4-Dichlorobenzene	9.4	10.0	94.0%	9.1	10.0	91.0%	3.2%
Acrolein	45.3	50.0	90.6%	48.6	50.0	97.2%	7.0%
Methyl Iodide	9.7	10.0	97.0%	9.5	10.0	95.0%	2.1%
Bromoethane	9.5	10.0	95.0%	9.1	10.0	91.0%	4.3%
Acrylonitrile	9.8	10.0	98.0%	10.4	10.0	104%	5.9%
1,1-Dichloropropene	9.6	10.0	96.0%	9.3	10.0	93.0%	3.2%
Dibromomethane	9.8	10.0	98.0%	9.9	10.0	99.0%	1.0%
1,1,1,2-Tetrachloroethane	10.1	10.0	101%	9.7	10.0	97.0%	4.0%
1,2-Dibromo-3-chloropropane	10.8	10.0	108%	10.6	10.0	106%	1.9%
1,2,3-Trichloropropane	10.4	10.0	104%	9.8	10.0	98.0%	5.9%
trans-1,4-Dichloro-2-butene	10.1	10.0	101%	9.8	10.0	98.0%	3.0%
1,3,5-Trimethylbenzene	9.8	10.0	98.0%	9.6	10.0	96.0%	2.1%
1,2,4-Trimethylbenzene	9.9	10.0	99.0%	9.6	10.0	96.0%	3.1%
Hexachlorobutadiene	8.7	10.0	87.0%	8.7	10.0	87.0%	0.0%
Ethylene Dibromide	10.0	10.0	100%	10.3	10.0	103%	3.0%
Bromochloromethane	10.3	10.0	103%	9.9	10.0	99.0%	4.0%
2,2-Dichloropropane	10.0	10.0	100%	9.7	10.0	97.0%	3.0%
1,3-Dichloropropane	9.8	10.0	98.0%	9.8	10.0	98.0%	0.0%
Isopropylbenzene	9.9	10.0	99.0%	9.5	10.0	95.0%	4.1%
n-Propylbenzene	10.0	10.0	100%	9.5	10.0	95.0%	5.1%
Bromobenzene	9.8	10.0	98.0%	9.7	10.0	97.0%	1.0%
2-Chlorotoluene	9.6	10.0	96.0%	9.3	10.0	93.0%	3.2%
4-Chlorotoluene	9.8	10.0	98.0%	9.4	10.0	94.0%	4.2%
tert-Butylbenzene	9.7	10.0	97.0%	9.3	10.0	93.0%	4.2%
sec-Butylbenzene	9.9	10.0	99.0%	9.5	10.0	95.0%	4.1%
4-Isopropyltoluene	10.0	10.0	100%	9.5	10.0	95.0%	5.1%
n-Butylbenzene	9.7	10.0	97.0%	9.2	10.0	92.0%	5.3%
1,2,4-Trichlorobenzene	9.4	10.0	94.0%	9.0	10.0	90.0%	4.3%
Naphthalene	9.6	10.0	96.0%	9.4	10.0	94.0%	2.1%
1,2,3-Trichlorobenzene	9.2	10.0	92.0%	9.0	10.0	90.0%	2.2%

Reported in µg/L (ppb)

RPD calculated using sample concentrations per SW846.

Volatile Surrogate Recovery

	LCS	LCSD
d4-1,2-Dichloroethane	101%	102%
d8-Toluene	100%	101%
Bromofluorobenzene	101%	99.9%
d4-1,2-Dichlorobenzene	99.3%	101%

ANALYTICAL RESOURCES INCORPORATED

ORGANICS ANALYSIS DATA SHEET
Volatiles by Purge & Trap GC/MS-Method SW8260C **Sample ID: MB-071511**
 METHOD BLANK

Lab Sample ID: MB-071511
LIMS ID: 11-15151
Matrix: Water
Data Release Authorized: VD
Reported: 07/15/11

QC Report No: TE13-The Boeing Company
Project: NBF
025082.311
Date Sampled: NA
Date Received: NA

Instrument/Analyst: NT3/PKC
Date Analyzed: 07/15/11 10:59

Sample Amount: 10.0 mL
Purge Volume: 10.0 mL

CAS Number	Analyte	RL	Result	Q
74-87-3	Chloromethane	0.5	< 0.5	U
74-83-9	Bromomethane	1.0	< 1.0	U
75-01-4	Vinyl Chloride	0.2	< 0.2	U
75-00-3	Chloroethane	0.2	< 0.2	U
75-09-2	Methylene Chloride	0.5	< 0.5	U
67-64-1	Acetone	5.0	< 5.0	U
75-15-0	Carbon Disulfide	0.2	< 0.2	U
75-35-4	1,1-Dichloroethene	0.2	< 0.2	U
75-34-3	1,1-Dichloroethane	0.2	< 0.2	U
156-60-5	trans-1,2-Dichloroethene	0.2	< 0.2	U
156-59-2	cis-1,2-Dichloroethene	0.2	< 0.2	U
67-66-3	Chloroform	0.2	< 0.2	U
107-06-2	1,2-Dichloroethane	0.2	< 0.2	U
78-93-3	2-Butanone	5.0	< 5.0	U
71-55-6	1,1,1-Trichloroethane	0.2	< 0.2	U
56-23-5	Carbon Tetrachloride	0.2	< 0.2	U
108-05-4	Vinyl Acetate	1.0	< 1.0	U
75-27-4	Bromodichloromethane	0.2	< 0.2	U
78-87-5	1,2-Dichloropropane	0.2	< 0.2	U
10061-01-5	cis-1,3-Dichloropropene	0.2	< 0.2	U
79-01-6	Trichloroethene	0.2	< 0.2	U
124-48-1	Dibromochloromethane	0.2	< 0.2	U
79-00-5	1,1,2-Trichloroethane	0.2	< 0.2	U
71-43-2	Benzene	0.2	< 0.2	U
10061-02-6	trans-1,3-Dichloropropene	0.2	< 0.2	U
110-75-8	2-Chloroethylvinylether	1.0	< 1.0	U
75-25-2	Bromoform	0.2	< 0.2	U
108-10-1	4-Methyl-2-Pentanone (MIBK)	5.0	< 5.0	U
591-78-6	2-Hexanone	5.0	< 5.0	U
127-18-4	Tetrachloroethene	0.2	< 0.2	U
79-34-5	1,1,2,2-Tetrachloroethane	0.2	< 0.2	U
108-88-3	Toluene	0.2	< 0.2	U
108-90-7	Chlorobenzene	0.2	< 0.2	U
100-41-4	Ethylbenzene	0.2	< 0.2	U
100-42-5	Styrene	0.2	< 0.2	U
75-69-4	Trichlorofluoromethane	0.2	< 0.2	U

ANALYTICAL RESOURCES INCORPORATED

ORGANICS ANALYSIS DATA SHEET
Volatiles by Purge & Trap GC/MS-Method SW8260C **Sample ID: MB-071511**
 METHOD BLANK

Lab Sample ID: MB-071511
LIMS ID: 11-15151
Matrix: Water
Date Analyzed: 07/15/11 10:59

QC Report No: TE13-The Boeing Company
Project: NBF
025082.311

CAS Number	Analyte	RL	Result	Q
76-13-1	1,1,2-Trichloro-1,2,2-trifluoroe	0.2	< 0.2	U
179601-23-1	m,p-Xylene	0.4	< 0.4	U
95-47-6	o-Xylene	0.2	< 0.2	U
95-50-1	1,2-Dichlorobenzene	0.2	< 0.2	U
541-73-1	1,3-Dichlorobenzene	0.2	< 0.2	U
106-46-7	1,4-Dichlorobenzene	0.2	< 0.2	U
107-02-8	Acrolein	5.0	< 5.0	U
74-88-4	Methyl Iodide	1.0	< 1.0	U
74-96-4	Bromoethane	0.2	< 0.2	U
107-13-1	Acrylonitrile	1.0	< 1.0	U
563-58-6	1,1-Dichloropropene	0.2	< 0.2	U
74-95-3	Dibromomethane	0.2	< 0.2	U
630-20-6	1,1,1,2-Tetrachloroethane	0.2	< 0.2	U
96-12-8	1,2-Dibromo-3-chloropropane	0.5	< 0.5	U
96-18-4	1,2,3-Trichloropropane	0.5	< 0.5	U
110-57-6	trans-1,4-Dichloro-2-butene	1.0	< 1.0	U
108-67-8	1,3,5-Trimethylbenzene	0.2	< 0.2	U
95-63-6	1,2,4-Trimethylbenzene	0.2	< 0.2	U
87-68-3	Hexachlorobutadiene	0.5	< 0.5	U
106-93-4	Ethylene Dibromide	0.2	< 0.2	U
74-97-5	Bromochloromethane	0.2	< 0.2	U
594-20-7	2,2-Dichloropropane	0.2	< 0.2	U
142-28-9	1,3-Dichloropropane	0.2	< 0.2	U
98-82-8	Isopropylbenzene	0.2	< 0.2	U
103-65-1	n-Propylbenzene	0.2	< 0.2	U
108-86-1	Bromobenzene	0.2	< 0.2	U
95-49-8	2-Chlorotoluene	0.2	< 0.2	U
106-43-4	4-Chlorotoluene	0.2	< 0.2	U
98-06-6	tert-Butylbenzene	0.2	< 0.2	U
135-98-8	sec-Butylbenzene	0.2	< 0.2	U
99-87-6	4-Isopropyltoluene	0.2	< 0.2	U
104-51-8	n-Butylbenzene	0.2	< 0.2	U
120-82-1	1,2,4-Trichlorobenzene	0.5	< 0.5	U
91-20-3	Naphthalene	0.5	< 0.5	U
87-61-6	1,2,3-Trichlorobenzene	0.5	< 0.5	U

Reported in µg/L (ppb)

Volatile Surrogate Recovery

d4-1,2-Dichloroethane	105%
d8-Toluene	98.7%
Bromofluorobenzene	102%
d4-1,2-Dichlorobenzene	102%

ANALYTICAL RESOURCES INCORPORATED

ORGANICS ANALYSIS DATA SHEET
TOTAL DIESEL RANGE HYDROCARBONS
NWTPHD by GC/FID-Silica and Acid Cleaned
Page 1 of 1
Matrix: Water

QC Report No: TE13-The Boeing Company
Project: NBF
025082.311

Data Release Authorized: VTS
Reported: 07/18/11

ARI ID	Sample ID	Extraction Date	Analysis Date	EFV DL	Range	RL	Result
MB-071511	Method Blank	07/15/11	07/16/11	1.00	Diesel	0.10	< 0.10 U
11-15151	HC ID: ---		FID9	1.0	Motor Oil	0.20	< 0.20 U
					o-Terphenyl		109%
TE13A	DW-04-071411	07/15/11	07/16/11	1.00	Diesel	0.10	< 0.10 U
11-15151	HC ID: ---		FID9	1.0	Motor Oil	0.20	< 0.20 U
					o-Terphenyl		107%
TE13B	DW-05-071411	07/15/11	07/16/11	1.00	Diesel	0.10	< 0.10 U
11-15152	HC ID: ---		FID9	1.0	Motor Oil	0.20	< 0.20 U
					o-Terphenyl		108%
TE13C	DW-06-071411	07/15/11	07/16/11	1.00	Diesel	0.10	< 0.10 U
11-15153	HC ID: ---		FID9	1.0	Motor Oil	0.20	< 0.20 U
					o-Terphenyl		104%

Reported in mg/L (ppm)

EFV-Effective Final Volume in mL.
DL-Dilution of extract prior to analysis.
RL-Reporting limit.

Diesel quantitation on total peaks in the range from C12 to C24.
Motor Oil quantitation on total peaks in the range from C24 to C38.
HC ID: DRO/RRO indicate results of organics or additional hydrocarbons in ranges are not identifiable.

FORM I

ANALYTICAL RESOURCES INCORPORATED

CLEANED TPHD SURROGATE RECOVERY SUMMARY

Matrix: Water

QC Report No: TE13-The Boeing Company
Project: NBF
025082.311

Client ID	OTER	TOT OUT
MB-071511	109%	0
LCS-071511	120%	0
LCSD-071511	118%	0
DW-04-071411	107%	0
DW-05-071411	108%	0
DW-06-071411	104%	0

	LCS/MB LIMITS	QC LIMITS
(OTER) = o-Terphenyl	(50-150)	(50-150)

Prep Method: SW3510C
Log Number Range: 11-15151 to 11-15153

FORM-II TPHD

ANALYTICAL RESOURCES INCORPORATED

ORGANICS ANALYSIS DATA SHEET
NWTPHD by GC/FID-Silica and Acid Cleaned **Sample ID: LCS-071511**
Page 1 of 1 **LCS/LCSD**

Lab Sample ID: LCS-071511
LIMS ID: 11-15151
Matrix: Water
Data Release Authorized: VD
Reported: 07/18/11

QC Report No: TE13-The Boeing Company
Project: NBF
025082.311
Date Sampled: 07/14/11
Date Received: 07/14/11

Date Extracted LCS/LCSD: 07/15/11
Date Analyzed LCS: 07/16/11 16:59
LCSD: 07/16/11 17:21
Instrument/Analyst LCS: FID/MH
LCSD: FID/MH

Sample Amount LCS: 500 mL
LCSD: 500 mL
Final Extract Volume LCS: 1.0 mL
LCSD: 1.0 mL
Dilution Factor LCS: 1.00
LCSD: 1.00

Range	LCS	Spike Added-LCS	LCS Recovery	LCSD	Spike Added-LCSD	LCSD Recovery	RPD
Diesel	2.90	3.00	96.7%	2.90	3.00	96.7%	0.0%

TPHD Surrogate Recovery

	LCS	LCSD
o-Terphenyl	120%	118%

Results reported in mg/L
RPD calculated using sample concentrations per SW846.

FORM III

ANALYTICAL RESOURCES INCORPORATED

TOTAL DIESEL RANGE HYDROCARBONS-EXTRACTION REPORT

ARI Job: TE13
Project: NBF
025082.311

Matrix: Water
Date Received: 07/14/11

ARI ID	Client ID	Samp Amt	Final Vol	Prep Date
11-15151-071511MB1	Method Blank	500 mL	1.00 mL	07/15/11
11-15151-071511LCS1	Lab Control	500 mL	1.00 mL	07/15/11
11-15151-071511LCSD1	Lab Control Dup	500 mL	1.00 mL	07/15/11
11-15151-TE13A	DW-04-071411	500 mL	1.00 mL	07/15/11
11-15152-TE13B	DW-05-071411	500 mL	1.00 mL	07/15/11
11-15153-TE13C	DW-06-071411	500 mL	1.00 mL	07/15/11

ANALYTICAL RESOURCES INCORPORATED

ORGANICS ANALYSIS DATA SHEET
PCB by GC/ECD Method SW8082

Sample ID: DW-04-071411
SAMPLE

Lab Sample ID: TE13A
LIMS ID: 11-15151
Matrix: Water
Data Release Authorized: MW
Reported: 07/18/11

QC Report No: TE13-The Boeing Company
Project: NBF
025082.311
Date Sampled: 07/14/11
Date Received: 07/14/11

Date Extracted: 07/15/11
Date Analyzed: 07/18/11 10:14
Instrument/Analyst: ECD7/JGR
GPC Cleanup: No
Sulfur Cleanup: Yes

Sample Amount: 1000 mL
Final Extract Volume: 0.50 mL
Dilution Factor: 1.00
Silica Gel: No
Acid Cleanup: Yes

CAS Number	Analyte	RL	Result
12674-11-2	Aroclor 1016	0.010	< 0.010 U
53469-21-9	Aroclor 1242	0.010	< 0.010 U
12672-29-6	Aroclor 1248	0.010	< 0.010 U
11097-69-1	Aroclor 1254	0.010	< 0.010 U
11096-82-5	Aroclor 1260	0.010	< 0.010 U
11104-28-2	Aroclor 1221	0.010	< 0.010 U
11141-16-5	Aroclor 1232	0.010	< 0.010 U
37324-23-5	Aroclor 1262	0.010	< 0.010 U

Reported in µg/L (ppb)

PCB Surrogate Recovery	
Decachlorobiphenyl	61.2%
Tetrachlorometaxylene	61.0%

FORM I

ANALYTICAL RESOURCES INCORPORATED

ORGANICS ANALYSIS DATA SHEET
PCB by GC/ECD Method SW8082

Sample ID: DW-05-071411
SAMPLE

Lab Sample ID: TE13B
LIMS ID: 11-15152
Matrix: Water
Data Release Authorized:
Reported: 07/18/11

QC Report No: TE13-The Boeing Company
Project: NBF
025082.311
Date Sampled: 07/14/11
Date Received: 07/14/11

Date Extracted: 07/15/11
Date Analyzed: 07/18/11 10:36
Instrument/Analyst: ECD7/JGR
GPC Cleanup: No
Sulfur Cleanup: Yes

Sample Amount: 1000 mL
Final Extract Volume: 0.50 mL
Dilution Factor: 1.00
Silica Gel: No
Acid Cleanup: Yes

CAS Number	Analyte	RL	Result
12674-11-2	Aroclor 1016	0.010	< 0.010 U
53469-21-9	Aroclor 1242	0.010	< 0.010 U
12672-29-6	Aroclor 1248	0.010	< 0.010 U
11097-69-1	Aroclor 1254	0.010	< 0.010 U
11096-82-5	Aroclor 1260	0.010	< 0.010 U
11104-28-2	Aroclor 1221	0.010	< 0.010 U
11141-16-5	Aroclor 1232	0.010	< 0.010 U
37324-23-5	Aroclor 1262	0.010	< 0.010 U

Reported in µg/L (ppb)

PCB Surrogate Recovery

Decachlorobiphenyl	68.5%
Tetrachlorometaxylene	65.5%

FORM I

ANALYTICAL RESOURCES INCORPORATED

ORGANICS ANALYSIS DATA SHEET
PCB by GC/ECD Method SW8082

Sample ID: DW-06-071411
SAMPLE

Lab Sample ID: TE13C
LIMS ID: 11-15153
Matrix: Water
Data Release Authorized: MW
Reported: 07/18/11

QC Report No: TE13-The Boeing Company
Project: NBF
025082.311
Date Sampled: 07/14/11
Date Received: 07/14/11

Date Extracted: 07/15/11
Date Analyzed: 07/18/11 10:59
Instrument/Analyst: ECD7/JGR
GPC Cleanup: No
Sulfur Cleanup: Yes

Sample Amount: 1000 mL
Final Extract Volume: 0.50 mL
Dilution Factor: 1.00
Silica Gel: No
Acid Cleanup: Yes

CAS Number	Analyte	RL	Result
12674-11-2	Aroclor 1016	0.010	< 0.010 U
53469-21-9	Aroclor 1242	0.010	< 0.010 U
12672-29-6	Aroclor 1248	0.010	< 0.010 U
11097-69-1	Aroclor 1254	0.010	< 0.010 U
11096-82-5	Aroclor 1260	0.010	< 0.010 U
11104-28-2	Aroclor 1221	0.010	< 0.010 U
11141-16-5	Aroclor 1232	0.010	< 0.010 U
37324-23-5	Aroclor 1262	0.010	< 0.010 U

Reported in µg/L (ppb)

PCB Surrogate Recovery

Decachlorobiphenyl	73.8%
Tetrachlorometaxylene	63.2%

FORM I

ANALYTICAL RESOURCES INCORPORATED

ORGANICS ANALYSIS DATA SHEET
PCB by GC/ECD Method SW8082

Sample ID: MB-071511
METHOD BLANK

Lab Sample ID: MB-071511
LIMS ID: 11-15151
Matrix: Water
Data Release Authorized:
Reported: 07/18/11

QC Report No: TE13-The Boeing Company
Project: NBF
025082.311
Date Sampled: NA
Date Received: NA

Date Extracted: 07/15/11
Date Analyzed: 07/18/11 11:22
Instrument/Analyst: ECD7/JGR
GPC Cleanup: No
Sulfur Cleanup: Yes

Sample Amount: 1000 mL
Final Extract Volume: 0.50 mL
Dilution Factor: 1.00
Silica Gel: No
Acid Cleanup: Yes

CAS Number	Analyte	RL	Result
12674-11-2	Aroclor 1016	0.010	< 0.010 U
53469-21-9	Aroclor 1242	0.010	< 0.010 U
12672-29-6	Aroclor 1248	0.010	< 0.010 U
11097-69-1	Aroclor 1254	0.010	< 0.010 U
11096-82-5	Aroclor 1260	0.010	< 0.010 U
11104-28-2	Aroclor 1221	0.010	< 0.010 U
11141-16-5	Aroclor 1232	0.010	< 0.010 U
37324-23-5	Aroclor 1262	0.010	< 0.010 U

Reported in µg/L (ppb)

PCB Surrogate Recovery

Decachlorobiphenyl	84.2%
Tetrachlorometaxylene	63.8%

FORM I

ANALYTICAL RESOURCES INCORPORATED

SW8082/PCB WATER SURROGATE RECOVERY SUMMARY

Matrix: Water

QC Report No: TE13-The Boeing Company
Project: NBF
025082.311

Client ID	DCBP % REC	DCBP LCL-UCL	TCMX % REC	TCMX LCL-UCL	TOT OUT
MB-071511	84.2%	32-108	63.8%	31-100	0
LCS-071511	82.5%	32-108	60.0%	31-100	0
LCSD-071511	100%	32-108	64.8%	31-100	0
DW-04-071411	61.2%	19-111	61.0%	21-100	0
DW-05-071411	68.5%	19-111	65.5%	21-100	0
DW-06-071411	73.8%	19-111	63.2%	21-100	0

Prep Method: SW3510C
Log Number Range: 11-15151 to 11-15153

FORM-II SW8082

ANALYTICAL RESOURCES INCORPORATED

ORGANICS ANALYSIS DATA SHEET
PCB by GC/ECD Method SW8082

Sample ID: LCS-071511
LCS/LCSD

Lab Sample ID: LCS-071511
LIMS ID: 11-15151
Matrix: Water
Data Release Authorized: MW
Reported: 07/18/11

QC Report No: TE13-The Boeing Company
Project: NBF
025082.311
Date Sampled: NA
Date Received: NA

Date Extracted LCS/LCSD: 07/15/11

Date Analyzed LCS: 07/18/11 11:45
LCSD: 07/18/11 12:08
Instrument/Analyst LCS: ECD7/JGR
LCSD: ECD7/JGR
GPC Cleanup: No
Sulfur Cleanup: Yes

Sample Amount LCS: 1000 mL
LCSD: 1000 mL
Final Extract Volume LCS: 0.50 mL
LCSD: 0.50 mL
Dilution Factor LCS: 1.00
LCSD: 1.00
Silica Gel: No
Acid Cleanup: Yes

Analyte	LCS	Spike Added-LCS	LCS Recovery	LCSD	Spike Added-LCSD	LCSD Recovery	RPD
Aroclor 1016	0.044	0.050	88.0%	0.045	0.050	90.0%	2.2%
Aroclor 1260	0.046	0.050	92.0%	0.052	0.050	104%	12.2%

PCB Surrogate Recovery

	LCS	LCSD
Decachlorobiphenyl	82.5%	100%
Tetrachlorometaxylene	60.0%	64.8%

Results reported in µg/L
RPD calculated using sample concentrations per SW846.

ANALYTICAL RESOURCES INCORPORATED

ORGANICS ANALYSIS DATA SHEET
TPHG by Method NWTPHG
Matrix: Water

Data Release Authorized:
Reported: 07/18/11

QC Report No: TE13-The Boeing Company
Project: NBF
Event: 025082.311
Date Sampled: 07/14/11
Date Received: 07/14/11

ARI ID	Client ID	Analysis Date	DL	Range	Result
MB-071511	Method Blank	07/15/11	1.0	Gasoline	< 0.25 U
11-15151		PID2		HC ID	---
				Trifluorotoluene	98.3%
				Bromobenzene	98.6%
TE13A	DW-04-071411	07/15/11	1.0	Gasoline	< 0.25 U
11-15151		PID2		HC ID	---
				Trifluorotoluene	98.6%
				Bromobenzene	95.5%
TE13B	DW-05-071411	07/15/11	1.0	Gasoline	< 0.25 U
11-15152		PID2		HC ID	---
				Trifluorotoluene	98.7%
				Bromobenzene	94.0%
TE13C	DW-06-071411	07/15/11	1.0	Gasoline	< 0.25 U
11-15153		PID2		HC ID	---
				Trifluorotoluene	99.5%
				Bromobenzene	96.6%
TE13D	Trip Blanks	07/15/11	1.0	Gasoline	< 0.25 U
11-15154		PID2		HC ID	---
				Trifluorotoluene	101%
				Bromobenzene	96.7%

Gasoline values reported in mg/L (ppm)

Quantitation on total peaks in the gasoline range from Toluene to Naphthalene.

GAS: Indicates the presence of gasoline or weathered gasoline.
GRO: Positive result that does not match an identifiable gasoline pattern.

ANALYTICAL RESOURCES INCORPORATED

TPHG WATER SURROGATE RECOVERY SUMMARY

ARI Job: TE13
Matrix: Water

QC Report No: TE13-The Boeing Company
Project: NBF
Event: 025082.311

Client ID	TFT	BBZ	TOT OUT
MB-071511	98.3%	98.6%	0
LCS-071511	105%	101%	0
LCSD-071511	107%	106%	0
DW-04-071411	98.6%	95.5%	0
DW-05-071411	98.7%	94.0%	0
DW-06-071411	99.5%	96.6%	0
Trip Blanks	101%	96.7%	0

	LCS/MB LIMITS	QC LIMITS
(TFT) = Trifluorotoluene	(80-120)	(80-120)
(BBZ) = Bromobenzene	(80-120)	(80-120)

Log Number Range: 11-15151 to 11-15154

FORM II TPHG

ANALYTICAL RESOURCES INCORPORATED

ORGANICS ANALYSIS DATA SHEET
TPHG by Method NWTPHG

Sample ID: LCS-071511
LAB CONTROL SAMPLE

Lab Sample ID: LCS-071511
LIMS ID: 11-15151
Matrix: Water
Data Release Authorized:
Reported: 07/18/11

QC Report No: TE13-The Boeing Company
Project: NBF
Event: 025082.311
Date Sampled: NA
Date Received: NA

Date Analyzed LCS: 07/15/11 08:46
LCSD: 07/15/11 09:13
Instrument/Analyst LCS: PID2/MS
LCSD: PID2/MS

Purge Volume: 5.0 mL

Dilution Factor LCS: 1.0
LCSD: 1.0

Analyte	LCS	Spike Added-LCS	LCS Recovery	LCSD	Spike Added-LCSD	LCSD Recovery	RPD
Gasoline Range Hydrocarbons	0.86	1.00	86.0%	0.87	1.00	87.0%	1.2%

Reported in mg/L (ppm)

RPD calculated using sample concentrations per SW846.

TPHG Surrogate Recovery

	LCS	LCSD
Trifluorotoluene	105%	107%
Bromobenzene	101%	106%

ANALYTICAL RESOURCES INCORPORATED

INORGANICS ANALYSIS DATA SHEET
DISSOLVED METALS

Sample ID: DW-04-071411
SAMPLE

Lab Sample ID: TE13A
LIMS ID: 11-15151
Matrix: Water
Data Release Authorized:
Reported: 07/19/11

QC Report No: TE13-The Boeing Company
Project: NBF
025082.311
Date Sampled: 07/14/11
Date Received: 07/14/11

Prep Meth	Prep Date	Analysis Method	Analysis Date	CAS Number	Analyte	RL	µg/L	Q
200.8	07/18/11	200.8	07/18/11	**7440-38-2**	**Arsenic**	0.2	**1.8**	
200.8	07/18/11	200.8	07/18/11	7440-43-9	Cadmium	0.1	0.1	U
200.8	07/18/11	200.8	07/18/11	**7440-47-3**	**Chromium**	0.5	**0.7**	
200.8	07/18/11	200.8	07/18/11	**7440-50-8**	**Copper**	0.5	**1.6**	
200.8	07/18/11	200.8	07/18/11	7439-92-1	Lead	0.1	0.1	U
7470A	07/15/11	7470A	07/18/11	7439-97-6	Mercury	0.1	0.1	U
200.8	07/18/11	200.8	07/18/11	**7440-02-0**	**Nickel**	0.5	**2.2**	
200.8	07/18/11	200.8	07/18/11	7440-66-6	Zinc	4	4	U

U-Analyte undetected at given RL
RL-Reporting Limit

ANALYTICAL RESOURCES INCORPORATED

INORGANICS ANALYSIS DATA SHEET
DISSOLVED METALS

Sample ID: DW-05-071411
SAMPLE

Lab Sample ID: TE13B
LIMS ID: 11-15152
Matrix: Water
Data Release Authorized:
Reported: 07/19/11

QC Report No: TE13-The Boeing Company
Project: NBF
025082.311
Date Sampled: 07/14/11
Date Received: 07/14/11

Prep Meth	Prep Date	Analysis Method	Analysis Date	CAS Number	Analyte	RL	µg/L	Q
200.8	07/18/11	200.8	07/18/11	**7440-38-2**	**Arsenic**	0.5	**4.4**	
200.8	07/18/11	200.8	07/18/11	7440-43-9	Cadmium	0.1	0.1	U
200.8	07/18/11	200.8	07/18/11	**7440-47-3**	**Chromium**	0.5	**1.6**	
200.8	07/18/11	200.8	07/18/11	**7440-50-8**	**Copper**	0.5	**2.5**	
200.8	07/18/11	200.8	07/18/11	**7439-92-1**	**Lead**	0.1	**0.3**	
7470A	07/15/11	7470A	07/18/11	7439-97-6	Mercury	0.1	0.1	U
200.8	07/18/11	200.8	07/18/11	**7440-02-0**	**Nickel**	0.5	**3.7**	
200.8	07/18/11	200.8	07/18/11	7440-66-6	Zinc	4	4	U

U-Analyte undetected at given RL
RL-Reporting Limit

ANALYTICAL RESOURCES INCORPORATED

INORGANICS ANALYSIS DATA SHEET
DISSOLVED METALS

Sample ID: DW-06-071411
SAMPLE

Lab Sample ID: TE13C
LIMS ID: 11-15153
Matrix: Water
Data Release Authorized:
Reported: 07/19/11

QC Report No: TE13-The Boeing Company
Project: NBF
025082.311
Date Sampled: 07/14/11
Date Received: 07/14/11

Prep Meth	Prep Date	Analysis Method	Analysis Date	CAS Number	Analyte	RL	µg/L	Q
200.8	07/18/11	200.8	07/18/11	**7440-38-2**	**Arsenic**	0.2	**4.0**	
200.8	07/18/11	200.8	07/18/11	7440-43-9	Cadmium	0.1	0.1	U
200.8	07/18/11	200.8	07/18/11	7440-47-3	Chromium	1	1	U
200.8	07/18/11	200.8	07/18/11	**7440-50-8**	**Copper**	0.5	**1.0**	
200.8	07/18/11	200.8	07/18/11	7439-92-1	Lead	0.1	0.1	U
7470A	07/15/11	7470A	07/18/11	7439-97-6	Mercury	0.1	0.1	U
200.8	07/18/11	200.8	07/18/11	**7440-02-0**	**Nickel**	0.5	**3.5**	
200.8	07/18/11	200.8	07/18/11	7440-66-6	Zinc	4	4	U

U-Analyte undetected at given RL
RL-Reporting Limit

ANALYTICAL RESOURCES INCORPORATED

INORGANICS ANALYSIS DATA SHEET
DISSOLVED METALS

Sample ID: METHOD BLANK

Lab Sample ID: TE13MB
LIMS ID: 11-15151
Matrix: Water
Data Release Authorized:
Reported: 07/19/11

QC Report No: TE13-The Boeing Company
Project: NBF
025082.311
Date Sampled: NA
Date Received: NA

Prep Meth	Prep Date	Analysis Method	Analysis Date	CAS Number	Analyte	RL	µg/L	Q
200.8	07/18/11	200.8	07/18/11	7440-38-2	Arsenic	0.2	0.2	U
200.8	07/18/11	200.8	07/18/11	7440-43-9	Cadmium	0.1	0.1	U
200.8	07/18/11	200.8	07/18/11	7440-47-3	Chromium	0.5	0.5	U
200.8	07/18/11	200.8	07/18/11	7440-50-8	Copper	0.5	0.5	U
200.8	07/18/11	200.8	07/18/11	7439-92-1	Lead	0.1	0.1	U
7470A	07/15/11	7470A	07/18/11	7439-97-6	Mercury	0.1	0.1	U
200.8	07/18/11	200.8	07/18/11	7440-02-0	Nickel	0.5	0.5	U
200.8	07/18/11	200.8	07/18/11	7440-66-6	Zinc	4	4	U

U-Analyte undetected at given RL
RL-Reporting Limit

ANALYTICAL RESOURCES INCORPORATED

INORGANICS ANALYSIS DATA SHEET
DISSOLVED METALS

Sample ID: LAB CONTROL

Lab Sample ID: TE13LCS
LIMS ID: 11-15151
Matrix: Water
Data Release Authorized
Reported: 07/19/11

QC Report No: TE13-The Boeing Company
Project: NBF
025082.311
Date Sampled: NA
Date Received: NA

BLANK SPIKE QUALITY CONTROL REPORT

Analyte	Analysis Method	Spike Found	Spike Added	% Recovery	Q
Arsenic	200.8	26.4	25.0	106%	
Cadmium	200.8	25.9	25.0	104%	
Chromium	200.8	26.0	25.0	104%	
Copper	200.8	27.5	25.0	110%	
Lead	200.8	26.8	25.0	107%	
Mercury	7470A	2.3	2.0	115%	
Nickel	200.8	26.7	25.0	107%	
Zinc	200.8	83	80	104%	

Reported in µg/L

N-Control limit not met
Control Limits: 80-120%

Analytical Resources, Incorporated
Analytical Chemists and Consultants

July 22, 2011

Kris Hendrickson
Landau Associates, Inc.
130 Second Ave
Edmonds, WA 98020

RE: Project: NBF – Dewatering Wells 025082.311
ARI Job: TE69

Dear Kris:

Please find enclosed the Chain of Custody (COC) record, sample receipt documentation, and analytical results for the above referenced project. Analytical Resources, Inc. (ARI) accepted seven water samples and a trip blank in good condition on July 19, 2011. One cooler was received with a temperature of 9.2°C.

The samples were analyzed for PCBs, VOCs, NWTPH-Gx, NWTPH-Dx and Dissolved Metals, as requested on the COC.

The VOCs method blank contained 1,2,3-Trichlorobenzene. All associated samples that contain analyte have been flagged with a "B" qualifier.

The VOCs CCAL is out of control low for all associated FORM III "Q" flagged analytes. All associated samples that contain analyte have been flagged with a "Q" qualifier.

The VOCs LCS and/or LCSD are out of control low for Vinyl Acetate, Naphthalene, 1,2,3-Trichlorobenzene and 2-Butanone.

There were no other irregularities with the samples.

Quality control analysis results are included for your review. Copies of the reports and all associated raw data will be kept on file electronically at ARI. If you have any questions or require additional information, please contact me at your convenience.

Sincerely,
ANALYTICAL RESOURCES, INC

Kelly Bottem
Client Services Manager
(206) 695-6211
kellyb@arilabs.com
www.arilabs.com

cc: Carl Bach, The Boeing Company, P.O. Box 3707, M/S 1W-12, Seattle, WA 98124-2207

4611 South 134th Place, Suite 100 • Tukwila WA 98168 • **206-695-6200** • **206-695-6201** fax

☒ Seattle/Edmonds (425) 778-0907
☐ Tacoma (253) 926-2493
☐ Spokane (509) 327-9737
☐ Portland (503) 542-1080
☐ _____

LANDAU ASSOCIATES

Chain-of-Custody Record

Date 7/18/11
Page 1 of 1

Project Name North Boeing Field Project No. 025082.311
Project Location/Event Seattle, WA / Dewatering Well Samples
Sampler's Name Dylan Frazier
Project Contact Carl Dorf / Ilais Henderson
Send Results To Carl Dorf / Ilais Henderson / Anne Howard

Turnaround Time
☐ Standard
☒ 24 HR IF POSSIBLE

Testing Parameters

Sample I.D. (DP)	Date (DP)	Time (DP)	Matrix	No. of Containers	Dissolved Metals *	VOCs	PCBs (low level)	TPH-Dx	TPH-Gx								Observations/Comments
DW-08-071911	7/19/11	~~1030~~ 1430	H_2O	10	X	X	X	X	X								~~X Allow water samples to settle, collect aliquot from clear portion~~ DHZ
DW-03-071911	7/19/11	1250	H_2O	4	X	X											X NWTPH-Dx - run acid wash/silica gel cleanup
DW-04-071911	7/19/11	1330	H_2O	4	X	X											
NBF-DTS-PRETREAT-071911	7/19/11	1355	H_2O	4	X	X											
NBF-DTS-PREGAC-071911	7/19/11	1410	H_2O	4	X	X											___ run samples standardized to _____ product
DW-07-071911	7/19/11	1540	H_2O	10	X	X	X	X	X								
DW-10-071911	7/19/11	1445	H_2O	10	X	X	X	X	X								___ Analyze for EPH if no specific product identified
TRIP BLANKS	7/19/11	n/a	H_2O	2		X			X								VOC/BTEX/VPH (soil):
																	___ non-preserved
																	___ preserved w/methanol
																	___ preserved w/sodium bisulfate
																	___ Freeze upon receipt
																	X Dissolved metal water samples field filtered
																	Other * FIELD FILTERED; ARSENIC, CADMIUM, CHROMIUM, COPPER, LEAD, MERCURY, NICKEL, ZINC

Special Shipment/Handling or Storage Requirements ON ICE
Method of Shipment DROP OFF

Relinquished by	Received by	Relinquished by	Received by
Signature [signature]	Signature [signature]	Signature	Signature
Printed Name Dylan Frazier	Printed Name Jennifer Millsap	Printed Name	Printed Name
Company LANDAU	Company ARI	Company	Company
Date 7/19/11 Time 1730	Date 7/19/11 Time 1730	Date Time	Date Time

WHITE COPY - Project File YELLOW COPY - Laboratory PINK COPY - Client Representative

Rev 8/09

Sample ID Cross Reference Report

ANALYTICAL RESOURCES INCORPORATED

ARI Job No: TE69
Client: The Boeing Company
Project Event: 025082.311
Project Name: North Boeing Field

	Sample ID	ARI Lab ID	ARI LIMS ID	Matrix	Sample Date/Time	VTSR
1.	DW-03-071911	TE69A	11-15408	Water	07/19/11 12:50	07/19/11 17:30
2.	DW-04-071911	TE69B	11-15409	Water	07/19/11 13:30	07/19/11 17:30
3.	NBF-DTS-PRETREAT-071911	TE69C	11-15410	Water	07/19/11 13:55	07/19/11 17:30
4.	NBF-DTS-PREGAC-071911	TE69D	11-15411	Water	07/19/11 14:10	07/19/11 17:30
5.	DW-08-071911	TE69E	11-15412	Water	07/19/11 14:30	07/19/11 17:30
6.	DW-07-071911	TE69F	11-15413	Water	07/19/11 15:40	07/19/11 17:30
7.	DW-10-071911	TE69G	11-15414	Water	07/19/11 14:45	07/19/11 17:30
8.	Trip Blanks	TE69H	11-15415	Water	07/19/11	07/19/11 17:30

Printed 07/19/11

PRESERVATION VERIFICATION 07/19/11

ANALYTICAL RESOURCES INCORPORATED

ARI Job No: **TE69**

PC: Kelly
VTSR: 07/19/11

Inquiry Number: NONE
Analysis Requested: 07/20/11
Contact: Bach,Carl
Client: The Boeing Company
Logged by: JM
Sample Set Used: Yes-481
Validatable Package: No
Deliverables:

Project #: 025082.311
Project: North Boeing Field
Sample Site:
SDG No:
Analytical Protocol: In-house

LOGNUM ARI ID	CLIENT ID	CN >12	WAD >12	NH3 <2	COD <2	FOG <2	MET <2	PHEN <2	PHOS <2	TKN <2	NO23 <2	TOC <2	S2 >9	AK102 <2	Fe2+ <2	DMET FLT	DOC FLT	PARAMETER	ADJUSTED TO	LOT NUMBER	AMOUNT ADDED	DATE/BY
11-15408 **TE69A**	DW-03-071911						DIS DADD									Y						
11-15409 **TE69B**	DW-04-071911						DIS									Y						
11-15410 **TE69C**	NBF-DTS-PRETREAT-071911						DIS									Y						
11-15411 **TE69D**	NBF-DTS-PREGAC-071911						DIS									Y						
11-15412 **TE69E**	DW-08-071911						DIS									Y						
11-15413 **TE69F**	DW-07-071911						DIS									Y						
11-15414 **TE69G**	DW-10-071911						DIS									Y						

Checked By JM Date 7/19/11

Analytical Resources, Incorporated
Analytical Chemists and Consultants

Cooler Receipt Form

ARI Client: Boeing
COC No(s): _____ (NA)
Assigned ARI Job No: TE69

Project Name: NSF
Delivered by: Fed-Ex UPS Courier Hand Delivered Other: _____
Tracking No: _____ (NA)

Preliminary Examination Phase:

Were intact, properly signed and dated custody seals attached to the outside of to cooler?	YES	NO
Were custody papers included with the cooler?	YES	NO
Were custody papers properly filled out (ink, signed, etc.)	YES	NO
Temperature of Cooler(s) (°C) (recommended 2.0-6.0 °C for chemistry) 9.2		

If cooler temperature is out of compliance fill out form 00070F

Temp Gun ID#: 90941619

Cooler Accepted by: JM Date: 7/19/11 Time: 1730

Complete custody forms and attach all shipping documents

Log-In Phase:

Was a temperature blank included in the cooler?		YES	NO
What kind of packing material was used? Bubble Wrap Wet Ice Gel Packs Baggies Foam Block Paper Other: _____			
Was sufficient ice used (if appropriate)?	NA	YES	NO
Were all bottles sealed in individual plastic bags?		YES	NO
Did all bottles arrive in good condition (unbroken)?		YES	NO
Were all bottle labels complete and legible?		YES	NO
Did the number of containers listed on COC match with the number of containers received?		YES	NO
Did all bottle labels and tags agree with custody papers?		YES	NO
Were all bottles used correct for the requested analyses?		YES	NO
Do any of the analyses (bottles) require preservation? (attach preservation sheet, excluding VOCs).	NA	YES	NO
Were all VOC vials free of air bubbles?	NA	YES	NO
Was sufficient amount of sample sent in each bottle?		YES	NO
Date VOC Trip Blank was made at ARI	NA	7/19/11	

Was Sample Split by ARI: (NA) YES Date/Time: _____ Equipment: _____ Split by: _____

Samples Logged by: JM Date: 7/19/11 Time: 1730

***** Notify Project Manager of discrepancies or concerns *****

Sample ID on Bottle	Sample ID on COC	Sample ID on Bottle	Sample ID on COC

Additional Notes, Discrepancies, & Resolutions:

By: Date

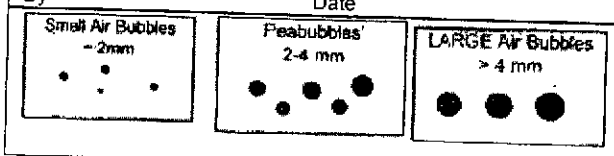

Small → "sm"
Peabubbles → "pb"
Large → "lg"
Headspace → "hs"

Analytical Resources, Incorporated
Analytical Chemists and Consultants

Cooler Temperature Compliance Form

TE69

Cooler#: (Temperature(°C): 9.2

Sample ID	Bottle Count	Bottle Type
All samples out of temp compliance.		

Re-sampled on 7/19/11 by TS.

Cooler#: Temperature(°C):

Sample ID	Bottle Count	Bottle Type

Cooler#: Temperature(°C):

Sample ID	Bottle Count	Bottle Type

Cooler#: Temperature(°C):

Sample ID	Bottle Count	Bottle Type

Completed by: AV Date: 7/21/11 Time: 1300

ANALYTICAL RESOURCES INCORPORATED

ORGANICS ANALYSIS DATA SHEET
Volatiles by Purge & Trap GC/MS-Method SW8260C **Sample ID: DW-03-071911**
 SAMPLE

Lab Sample ID: TE69A
LIMS ID: 11-15408
Matrix: Water
Data Release Authorized: VD
Reported: 07/21/11

QC Report No: TE69-The Boeing Company
Project: North Boeing Field
025082.311
Date Sampled: 07/19/11
Date Received: 07/19/11

Instrument/Analyst: NT3/PKC
Date Analyzed: 07/20/11 18:12

Sample Amount: 10.0 mL
Purge Volume: 10.0 mL

CAS Number	Analyte	RL	Result	Q
74-87-3	Chloromethane	0.5	< 0.5	U
74-83-9	Bromomethane	1.0	< 1.0	U
75-01-4	**Vinyl Chloride**	**0.2**	**0.5**	
75-00-3	Chloroethane	0.2	< 0.2	U
75-09-2	Methylene Chloride	0.5	< 0.5	U
67-64-1	Acetone	5.0	< 5.0	U
75-15-0	Carbon Disulfide	0.2	< 0.2	U
75-35-4	1,1-Dichloroethene	0.2	< 0.2	U
75-34-3	1,1-Dichloroethane	0.2	< 0.2	U
156-60-5	trans-1,2-Dichloroethene	0.2	< 0.2	U
156-59-2	**cis-1,2-Dichloroethene**	**0.2**	**0.5**	
67-66-3	Chloroform	0.2	< 0.2	U
107-06-2	1,2-Dichloroethane	0.2	< 0.2	U
78-93-3	2-Butanone	5.0	< 5.0	U
71-55-6	1,1,1-Trichloroethane	0.2	< 0.2	U
56-23-5	Carbon Tetrachloride	0.2	< 0.2	U
108-05-4	Vinyl Acetate	1.0	< 1.0	U
75-27-4	Bromodichloromethane	0.2	< 0.2	U
78-87-5	1,2-Dichloropropane	0.2	< 0.2	U
10061-01-5	cis-1,3-Dichloropropene	0.2	< 0.2	U
79-01-6	Trichloroethene	0.2	< 0.2	U
124-48-1	Dibromochloromethane	0.2	< 0.2	U
79-00-5	1,1,2-Trichloroethane	0.2	< 0.2	U
71-43-2	Benzene	0.2	< 0.2	U
10061-02-6	trans-1,3-Dichloropropene	0.2	< 0.2	U
110-75-8	2-Chloroethylvinylether	1.0	< 1.0	U
75-25-2	Bromoform	0.2	< 0.2	U
108-10-1	4-Methyl-2-Pentanone (MIBK)	5.0	< 5.0	U
591-78-6	2-Hexanone	5.0	< 5.0	U
127-18-4	Tetrachloroethene	0.2	< 0.2	U
79-34-5	1,1,2,2-Tetrachloroethane	0.2	< 0.2	U
108-88-3	Toluene	0.2	< 0.2	U
108-90-7	Chlorobenzene	0.2	< 0.2	U
100-41-4	Ethylbenzene	0.2	< 0.2	U
100-42-5	Styrene	0.2	< 0.2	U
75-69-4	Trichlorofluoromethane	0.2	< 0.2	U

ANALYTICAL RESOURCES INCORPORATED

ORGANICS ANALYSIS DATA SHEET
Volatiles by Purge & Trap GC/MS-Method SW8260C **Sample ID: DW-03-071911**
 SAMPLE

Lab Sample ID: TE69A
LIMS ID: 11-15408
Matrix: Water
Date Analyzed: 07/20/11 18:12

QC Report No: TE69-The Boeing Company
Project: North Boeing Field
025082.311

CAS Number	Analyte	RL	Result	Q
76-13-1	1,1,2-Trichloro-1,2,2-trifluoroe	0.2	< 0.2	U
179601-23-1	m,p-Xylene	0.4	< 0.4	U
95-47-6	o-Xylene	0.2	< 0.2	U
95-50-1	1,2-Dichlorobenzene	0.2	< 0.2	U
541-73-1	1,3-Dichlorobenzene	0.2	< 0.2	U
106-46-7	1,4-Dichlorobenzene	0.2	< 0.2	U
107-02-8	Acrolein	5.0	< 5.0	U
74-88-4	Methyl Iodide	1.0	< 1.0	U
74-96-4	Bromoethane	0.2	< 0.2	U
107-13-1	Acrylonitrile	1.0	< 1.0	U
563-58-6	1,1-Dichloropropene	0.2	< 0.2	U
74-95-3	Dibromomethane	0.2	< 0.2	U
630-20-6	1,1,1,2-Tetrachloroethane	0.2	< 0.2	U
96-12-8	1,2-Dibromo-3-chloropropane	0.5	< 0.5	U
96-18-4	1,2,3-Trichloropropane	0.5	< 0.5	U
110-57-6	trans-1,4-Dichloro-2-butene	1.0	< 1.0	U
108-67-8	1,3,5-Trimethylbenzene	0.2	< 0.2	U
95-63-6	1,2,4-Trimethylbenzene	0.2	< 0.2	U
87-68-3	Hexachlorobutadiene	0.5	< 0.5	U
106-93-4	Ethylene Dibromide	0.2	< 0.2	U
74-97-5	Bromochloromethane	0.2	< 0.2	U
594-20-7	2,2-Dichloropropane	0.2	< 0.2	U
142-28-9	1,3-Dichloropropane	0.2	< 0.2	U
98-82-8	Isopropylbenzene	0.2	< 0.2	U
103-65-1	n-Propylbenzene	0.2	< 0.2	U
108-86-1	Bromobenzene	0.2	< 0.2	U
95-49-8	2-Chlorotoluene	0.2	< 0.2	U
106-43-4	4-Chlorotoluene	0.2	< 0.2	U
98-06-6	tert-Butylbenzene	0.2	< 0.2	U
135-98-8	sec-Butylbenzene	0.2	< 0.2	U
99-87-6	4-Isopropyltoluene	0.2	< 0.2	U
104-51-8	n-Butylbenzene	0.2	< 0.2	U
120-82-1	1,2,4-Trichlorobenzene	0.5	< 0.5	U
91-20-3	Naphthalene	0.5	< 0.5	U
87-61-6	1,2,3-Trichlorobenzene	0.5	< 0.5	U

Reported in µg/L (ppb)

Volatile Surrogate Recovery

d4-1,2-Dichloroethane	87.6%
d8-Toluene	98.8%
Bromofluorobenzene	93.6%
d4-1,2-Dichlorobenzene	98.0%

2-Chloroethylvinylether is an acid labile compound and may not be recovered from an acid preserved sample.

ANALYTICAL RESOURCES INCORPORATED

ORGANICS ANALYSIS DATA SHEET
Volatiles by Purge & Trap GC/MS-Method SW8260C **Sample ID: DW-04-071911**
 SAMPLE

Lab Sample ID: TE69B
LIMS ID: 11-15409
Matrix: Water
Data Release Authorized:
Reported: 07/21/11

QC Report No: TE69-The Boeing Company
Project: North Boeing Field
025082.311
Date Sampled: 07/19/11
Date Received: 07/19/11

Instrument/Analyst: NT3/PKC
Date Analyzed: 07/20/11 18:39

Sample Amount: 10.0 mL
Purge Volume: 10.0 mL

CAS Number	Analyte	RL	Result	Q
74-87-3	Chloromethane	0.5	< 0.5	U
74-83-9	Bromomethane	1.0	< 1.0	U
75-01-4	Vinyl Chloride	0.2	< 0.2	U
75-00-3	Chloroethane	0.2	< 0.2	U
75-09-2	Methylene Chloride	0.5	< 0.5	U
67-64-1	Acetone	5.0	< 5.0	U
75-15-0	Carbon Disulfide	0.2	< 0.2	U
75-35-4	1,1-Dichloroethene	0.2	< 0.2	U
75-34-3	1,1-Dichloroethane	0.2	< 0.2	U
156-60-5	trans-1,2-Dichloroethene	0.2	< 0.2	U
156-59-2	**cis-1,2-Dichloroethene**	**0.2**	**1.5**	
67-66-3	**Chloroform**	**0.2**	**0.6**	
107-06-2	1,2-Dichloroethane	0.2	< 0.2	U
78-93-3	2-Butanone	5.0	< 5.0	U
71-55-6	1,1,1-Trichloroethane	0.2	< 0.2	U
56-23-5	Carbon Tetrachloride	0.2	< 0.2	U
108-05-4	Vinyl Acetate	1.0	< 1.0	U
75-27-4	Bromodichloromethane	0.2	< 0.2	U
78-87-5	1,2-Dichloropropane	0.2	< 0.2	U
10061-01-5	cis-1,3-Dichloropropene	0.2	< 0.2	U
79-01-6	**Trichloroethene**	**0.2**	**3.2**	
124-48-1	Dibromochloromethane	0.2	< 0.2	U
79-00-5	1,1,2-Trichloroethane	0.2	< 0.2	U
71-43-2	Benzene	0.2	< 0.2	U
10061-02-6	trans-1,3-Dichloropropene	0.2	< 0.2	U
110-75-8	2-Chloroethylvinylether	1.0	< 1.0	U
75-25-2	Bromoform	0.2	< 0.2	U
108-10-1	4-Methyl-2-Pentanone (MIBK)	5.0	< 5.0	U
591-78-6	2-Hexanone	5.0	< 5.0	U
127-18-4	**Tetrachloroethene**	**0.2**	**4.8**	
79-34-5	1,1,2,2-Tetrachloroethane	0.2	< 0.2	U
108-88-3	Toluene	0.2	< 0.2	U
108-90-7	Chlorobenzene	0.2	< 0.2	U
100-41-4	Ethylbenzene	0.2	< 0.2	U
100-42-5	Styrene	0.2	< 0.2	U
75-69-4	Trichlorofluoromethane	0.2	< 0.2	U

ANALYTICAL RESOURCES INCORPORATED

ORGANICS ANALYSIS DATA SHEET
Volatiles by Purge & Trap GC/MS-Method SW8260C **Sample ID: DW-04-071911**
 SAMPLE

Lab Sample ID: TE69B
LIMS ID: 11-15409
Matrix: Water
Date Analyzed: 07/20/11 18:39

QC Report No: TE69-The Boeing Company
Project: North Boeing Field
025082.311

CAS Number	Analyte	RL	Result	Q
76-13-1	1,1,2-Trichloro-1,2,2-trifluoroe	0.2	< 0.2	U
179601-23-1	m,p-Xylene	0.4	< 0.4	U
95-47-6	o-Xylene	0.2	< 0.2	U
95-50-1	1,2-Dichlorobenzene	0.2	< 0.2	U
541-73-1	1,3-Dichlorobenzene	0.2	< 0.2	U
106-46-7	1,4-Dichlorobenzene	0.2	< 0.2	U
107-02-8	Acrolein	5.0	< 5.0	U
74-88-4	Methyl Iodide	1.0	< 1.0	U
74-96-4	Bromoethane	0.2	< 0.2	U
107-13-1	Acrylonitrile	1.0	< 1.0	U
563-58-6	1,1-Dichloropropene	0.2	< 0.2	U
74-95-3	Dibromomethane	0.2	< 0.2	U
630-20-6	1,1,1,2-Tetrachloroethane	0.2	< 0.2	U
96-12-8	1,2-Dibromo-3-chloropropane	0.5	< 0.5	U
96-18-4	1,2,3-Trichloropropane	0.5	< 0.5	U
110-57-6	trans-1,4-Dichloro-2-butene	1.0	< 1.0	U
108-67-8	1,3,5-Trimethylbenzene	0.2	< 0.2	U
95-63-6	1,2,4-Trimethylbenzene	0.2	< 0.2	U
87-68-3	Hexachlorobutadiene	0.5	< 0.5	U
106-93-4	Ethylene Dibromide	0.2	< 0.2	U
74-97-5	Bromochloromethane	0.2	< 0.2	U
594-20-7	2,2-Dichloropropane	0.2	< 0.2	U
142-28-9	1,3-Dichloropropane	0.2	< 0.2	U
98-82-8	Isopropylbenzene	0.2	< 0.2	U
103-65-1	n-Propylbenzene	0.2	< 0.2	U
108-86-1	Bromobenzene	0.2	< 0.2	U
95-49-8	2-Chlorotoluene	0.2	< 0.2	U
106-43-4	4-Chlorotoluene	0.2	< 0.2	U
98-06-6	tert-Butylbenzene	0.2	< 0.2	U
135-98-8	sec-Butylbenzene	0.2	< 0.2	U
99-87-6	4-Isopropyltoluene	0.2	< 0.2	U
104-51-8	n-Butylbenzene	0.2	< 0.2	U
120-82-1	1,2,4-Trichlorobenzene	0.5	< 0.5	U
91-20-3	Naphthalene	0.5	< 0.5	U
87-61-6	1,2,3-Trichlorobenzene	0.5	< 0.5	U

Reported in µg/L (ppb)

Volatile Surrogate Recovery

d4-1,2-Dichloroethane	88.0%
d8-Toluene	98.4%
Bromofluorobenzene	93.4%
d4-1,2-Dichlorobenzene	99.3%

2-Chloroethylvinylether is an acid labile compound and may not be recovered from an acid preserved sample.

ANALYTICAL RESOURCES INCORPORATED

ORGANICS ANALYSIS DATA SHEET
Volatiles by Purge & Trap GC/MS-Method SW8260C **Sample ID: NBF-DTS-PRETREAT-071911**
 SAMPLE

Lab Sample ID: TE69C
LIMS ID: 11-15410
Matrix: Water
Data Release Authorized:
Reported: 07/21/11

QC Report No: TE69-The Boeing Company
Project: North Boeing Field
025082.311
Date Sampled: 07/19/11
Date Received: 07/19/11

Instrument/Analyst: NT3/PKC
Date Analyzed: 07/20/11 19:06

Sample Amount: 10.0 mL
Purge Volume: 10.0 mL

CAS Number	Analyte	RL	Result	Q
74-87-3	Chloromethane	0.5	< 0.5	U
74-83-9	Bromomethane	1.0	< 1.0	U
75-01-4	**Vinyl Chloride**	**0.2**	**0.3**	
75-00-3	Chloroethane	0.2	< 0.2	U
75-09-2	**Methylene Chloride**	**0.5**	**0.7**	
67-64-1	Acetone	5.0	< 5.0	U
75-15-0	Carbon Disulfide	0.2	< 0.2	U
75-35-4	1,1-Dichloroethene	0.2	< 0.2	U
75-34-3	1,1-Dichloroethane	0.2	< 0.2	U
156-60-5	trans-1,2-Dichloroethene	0.2	< 0.2	U
156-59-2	**cis-1,2-Dichloroethene**	**0.2**	**1.4**	
67-66-3	Chloroform	0.2	< 0.2	U
107-06-2	1,2-Dichloroethane	0.2	< 0.2	U
78-93-3	2-Butanone	5.0	< 5.0	U
71-55-6	1,1,1-Trichloroethane	0.2	< 0.2	U
56-23-5	Carbon Tetrachloride	0.2	< 0.2	U
108-05-4	Vinyl Acetate	1.0	< 1.0	U
75-27-4	Bromodichloromethane	0.2	< 0.2	U
78-87-5	1,2-Dichloropropane	0.2	< 0.2	U
10061-01-5	cis-1,3-Dichloropropene	0.2	< 0.2	U
79-01-6	Trichloroethene	0.2	< 0.2	U
124-48-1	Dibromochloromethane	0.2	< 0.2	U
79-00-5	1,1,2-Trichloroethane	0.2	< 0.2	U
71-43-2	Benzene	0.2	< 0.2	U
10061-02-6	trans-1,3-Dichloropropene	0.2	< 0.2	U
110-75-8	2-Chloroethylvinylether	1.0	< 1.0	U
75-25-2	Bromoform	0.2	< 0.2	U
108-10-1	4-Methyl-2-Pentanone (MIBK)	5.0	< 5.0	U
591-78-6	2-Hexanone	5.0	< 5.0	U
127-18-4	Tetrachloroethene	0.2	< 0.2	U
79-34-5	1,1,2,2-Tetrachloroethane	0.2	< 0.2	U
108-88-3	Toluene	0.2	< 0.2	U
108-90-7	Chlorobenzene	0.2	< 0.2	U
100-41-4	Ethylbenzene	0.2	< 0.2	U
100-42-5	Styrene	0.2	< 0.2	U
75-69-4	Trichlorofluoromethane	0.2	< 0.2	U

ANALYTICAL RESOURCES INCORPORATED

ORGANICS ANALYSIS DATA SHEET
Volatiles by Purge & Trap GC/MS-Method SW8260C **Sample ID: NBF-DTS-PRETREAT-071911**
 SAMPLE

Lab Sample ID: TE69C
LIMS ID: 11-15410
Matrix: Water
Date Analyzed: 07/20/11 19:06

QC Report No: TE69-The Boeing Company
Project: North Boeing Field
025082.311

CAS Number	Analyte	RL	Result	Q
76-13-1	1,1,2-Trichloro-1,2,2-trifluoroe	0.2	< 0.2	U
179601-23-1	m,p-Xylene	0.4	< 0.4	U
95-47-6	o-Xylene	0.2	< 0.2	U
95-50-1	1,2-Dichlorobenzene	0.2	< 0.2	U
541-73-1	1,3-Dichlorobenzene	0.2	< 0.2	U
106-46-7	1,4-Dichlorobenzene	0.2	< 0.2	U
107-02-8	Acrolein	5.0	< 5.0	U
74-88-4	Methyl Iodide	1.0	< 1.0	U
74-96-4	Bromoethane	0.2	< 0.2	U
107-13-1	Acrylonitrile	1.0	< 1.0	U
563-58-6	1,1-Dichloropropene	0.2	< 0.2	U
74-95-3	Dibromomethane	0.2	< 0.2	U
630-20-6	1,1,1,2-Tetrachloroethane	0.2	< 0.2	U
96-12-8	1,2-Dibromo-3-chloropropane	0.5	< 0.5	U
96-18-4	1,2,3-Trichloropropane	0.5	< 0.5	U
110-57-6	trans-1,4-Dichloro-2-butene	1.0	< 1.0	U
108-67-8	1,3,5-Trimethylbenzene	0.2	< 0.2	U
95-63-6	1,2,4-Trimethylbenzene	0.2	< 0.2	U
87-68-3	Hexachlorobutadiene	0.5	< 0.5	U
106-93-4	Ethylene Dibromide	0.2	< 0.2	U
74-97-5	Bromochloromethane	0.2	< 0.2	U
594-20-7	2,2-Dichloropropane	0.2	< 0.2	U
142-28-9	1,3-Dichloropropane	0.2	< 0.2	U
98-82-8	Isopropylbenzene	0.2	< 0.2	U
103-65-1	n-Propylbenzene	0.2	< 0.2	U
108-86-1	Bromobenzene	0.2	< 0.2	U
95-49-8	2-Chlorotoluene	0.2	< 0.2	U
106-43-4	4-Chlorotoluene	0.2	< 0.2	U
98-06-6	tert-Butylbenzene	0.2	< 0.2	U
135-98-8	sec-Butylbenzene	0.2	< 0.2	U
99-87-6	4-Isopropyltoluene	0.2	< 0.2	U
104-51-8	n-Butylbenzene	0.2	< 0.2	U
120-82-1	1,2,4-Trichlorobenzene	0.5	< 0.5	U
91-20-3	Naphthalene	0.5	< 0.5	U
87-61-6	1,2,3-Trichlorobenzene	0.5	< 0.5	U

Reported in µg/L (ppb)

Volatile Surrogate Recovery

d4-1,2-Dichloroethane	86.2%
d8-Toluene	99.0%
Bromofluorobenzene	93.6%
d4-1,2-Dichlorobenzene	98.5%

2-Chloroethylvinylether is an acid labile compound and may not be recovered from an acid preserved sample.

ANALYTICAL RESOURCES INCORPORATED

ORGANICS ANALYSIS DATA SHEET
Volatiles by Purge & Trap GC/MS-Method SW8260C **Sample ID: NBF-DTS-PREGAC-071911**
 SAMPLE

Lab Sample ID: TE69D
LIMS ID: 11-15411
Matrix: Water
Data Release Authorized: VB
Reported: 07/21/11

QC Report No: TE69-The Boeing Company
Project: North Boeing Field
025082.311
Date Sampled: 07/19/11
Date Received: 07/19/11

Instrument/Analyst: NT3/PKC
Date Analyzed: 07/20/11 19:33

Sample Amount: 10.0 mL
Purge Volume: 10.0 mL

CAS Number	Analyte	RL	Result	Q
74-87-3	Chloromethane	0.5	< 0.5	U
74-83-9	Bromomethane	1.0	< 1.0	U
75-01-4	Vinyl Chloride	0.2	< 0.2	U
75-00-3	Chloroethane	0.2	< 0.2	U
75-09-2	Methylene Chloride	0.5	< 0.5	U
67-64-1	Acetone	5.0	< 5.0	U
75-15-0	Carbon Disulfide	0.2	< 0.2	U
75-35-4	1,1-Dichloroethene	0.2	< 0.2	U
75-34-3	1,1-Dichloroethane	0.2	< 0.2	U
156-60-5	trans-1,2-Dichloroethene	0.2	< 0.2	U
156-59-2	**cis-1,2-Dichloroethene**	**0.2**	**1.2**	
67-66-3	Chloroform	0.2	< 0.2	U
107-06-2	1,2-Dichloroethane	0.2	< 0.2	U
78-93-3	2-Butanone	5.0	< 5.0	U
71-55-6	1,1,1-Trichloroethane	0.2	< 0.2	U
56-23-5	Carbon Tetrachloride	0.2	< 0.2	U
108-05-4	Vinyl Acetate	1.0	< 1.0	U
75-27-4	Bromodichloromethane	0.2	< 0.2	U
78-87-5	1,2-Dichloropropane	0.2	< 0.2	U
10061-01-5	cis-1,3-Dichloropropene	0.2	< 0.2	U
79-01-6	Trichloroethene	0.2	< 0.2	U
124-48-1	Dibromochloromethane	0.2	< 0.2	U
79-00-5	1,1,2-Trichloroethane	0.2	< 0.2	U
71-43-2	Benzene	0.2	< 0.2	U
10061-02-6	trans-1,3-Dichloropropene	0.2	< 0.2	U
110-75-8	2-Chloroethylvinylether	1.0	< 1.0	U
75-25-2	Bromoform	0.2	< 0.2	U
108-10-1	4-Methyl-2-Pentanone (MIBK)	5.0	< 5.0	U
591-78-6	2-Hexanone	5.0	< 5.0	U
127-18-4	Tetrachloroethene	0.2	< 0.2	U
79-34-5	1,1,2,2-Tetrachloroethane	0.2	< 0.2	U
108-88-3	Toluene	0.2	< 0.2	U
108-90-7	Chlorobenzene	0.2	< 0.2	U
100-41-4	Ethylbenzene	0.2	< 0.2	U
100-42-5	Styrene	0.2	< 0.2	U
75-69-4	Trichlorofluoromethane	0.2	< 0.2	U

ANALYTICAL RESOURCES INCORPORATED

ORGANICS ANALYSIS DATA SHEET
Volatiles by Purge & Trap GC/MS-Method SW8260C **Sample ID: NBF-DTS-PREGAC-071911**
 SAMPLE

Lab Sample ID: TE69D
LIMS ID: 11-15411
Matrix: Water
Date Analyzed: 07/20/11 19:33

QC Report No: TE69-The Boeing Company
Project: North Boeing Field
025082.311

CAS Number	Analyte	RL	Result	Q
76-13-1	1,1,2-Trichloro-1,2,2-trifluoroe	0.2	< 0.2	U
179601-23-1	m,p-Xylene	0.4	< 0.4	U
95-47-6	o-Xylene	0.2	< 0.2	U
95-50-1	1,2-Dichlorobenzene	0.2	< 0.2	U
541-73-1	1,3-Dichlorobenzene	0.2	< 0.2	U
106-46-7	1,4-Dichlorobenzene	0.2	< 0.2	U
107-02-8	Acrolein	5.0	< 5.0	U
74-88-4	Methyl Iodide	1.0	< 1.0	U
74-96-4	Bromoethane	0.2	< 0.2	U
107-13-1	Acrylonitrile	1.0	< 1.0	U
563-58-6	1,1-Dichloropropene	0.2	< 0.2	U
74-95-3	Dibromomethane	0.2	< 0.2	U
630-20-6	1,1,1,2-Tetrachloroethane	0.2	< 0.2	U
96-12-8	1,2-Dibromo-3-chloropropane	0.5	< 0.5	U
96-18-4	1,2,3-Trichloropropane	0.5	< 0.5	U
110-57-6	trans-1,4-Dichloro-2-butene	1.0	< 1.0	U
108-67-8	1,3,5-Trimethylbenzene	0.2	< 0.2	U
95-63-6	1,2,4-Trimethylbenzene	0.2	< 0.2	U
87-68-3	Hexachlorobutadiene	0.5	< 0.5	U
106-93-4	Ethylene Dibromide	0.2	< 0.2	U
74-97-5	Bromochloromethane	0.2	< 0.2	U
594-20-7	2,2-Dichloropropane	0.2	< 0.2	U
142-28-9	1,3-Dichloropropane	0.2	< 0.2	U
98-82-8	Isopropylbenzene	0.2	< 0.2	U
103-65-1	n-Propylbenzene	0.2	< 0.2	U
108-86-1	Bromobenzene	0.2	< 0.2	U
95-49-8	2-Chlorotoluene	0.2	< 0.2	U
106-43-4	4-Chlorotoluene	0.2	< 0.2	U
98-06-6	tert-Butylbenzene	0.2	< 0.2	U
135-98-8	sec-Butylbenzene	0.2	< 0.2	U
99-87-6	4-Isopropyltoluene	0.2	< 0.2	U
104-51-8	n-Butylbenzene	0.2	< 0.2	U
120-82-1	1,2,4-Trichlorobenzene	0.5	< 0.5	U
91-20-3	Naphthalene	0.5	< 0.5	U
87-61-6	1,2,3-Trichlorobenzene	0.5	< 0.5	U

Reported in µg/L (ppb)

Volatile Surrogate Recovery

d4-1,2-Dichloroethane	88.2%
d8-Toluene	99.2%
Bromofluorobenzene	94.3%
d4-1,2-Dichlorobenzene	98.1%

2-Chloroethylvinylether is an acid labile compound and may not be recovered from an acid preserved sample.

ANALYTICAL RESOURCES INCORPORATED

ORGANICS ANALYSIS DATA SHEET
Volatiles by Purge & Trap GC/MS-Method SW8260C **Sample ID: DW-08-071911**
 SAMPLE

Lab Sample ID: TE69E
LIMS ID: 11-15412
Matrix: Water
Data Release Authorized: VS
Reported: 07/21/11

QC Report No: TE69-The Boeing Company
Project: North Boeing Field
025082.311
Date Sampled: 07/19/11
Date Received: 07/19/11

Instrument/Analyst: NT3/PKC
Date Analyzed: 07/20/11 20:00

Sample Amount: 10.0 mL
Purge Volume: 10.0 mL

CAS Number	Analyte	RL	Result	Q
74-87-3	Chloromethane	0.5	< 0.5	U
74-83-9	Bromomethane	1.0	< 1.0	U
75-01-4	Vinyl Chloride	0.2	< 0.2	U
75-00-3	Chloroethane	0.2	< 0.2	U
75-09-2	**Methylene Chloride**	**0.5**	**0.9**	
67-64-1	Acetone	5.0	< 5.0	U
75-15-0	Carbon Disulfide	0.2	< 0.2	U
75-35-4	1,1-Dichloroethene	0.2	< 0.2	U
75-34-3	1,1-Dichloroethane	0.2	< 0.2	U
156-60-5	trans-1,2-Dichloroethene	0.2	< 0.2	U
156-59-2	**cis-1,2-Dichloroethene**	**0.2**	**0.5**	
67-66-3	Chloroform	0.2	< 0.2	U
107-06-2	1,2-Dichloroethane	0.2	< 0.2	U
78-93-3	2-Butanone	5.0	< 5.0	U
71-55-6	1,1,1-Trichloroethane	0.2	< 0.2	U
56-23-5	Carbon Tetrachloride	0.2	< 0.2	U
108-05-4	Vinyl Acetate	1.0	< 1.0	U
75-27-4	Bromodichloromethane	0.2	< 0.2	U
78-87-5	1,2-Dichloropropane	0.2	< 0.2	U
10061-01-5	cis-1,3-Dichloropropene	0.2	< 0.2	U
79-01-6	**Trichloroethene**	**0.2**	**1.4**	
124-48-1	Dibromochloromethane	0.2	< 0.2	U
79-00-5	1,1,2-Trichloroethane	0.2	< 0.2	U
71-43-2	Benzene	0.2	< 0.2	U
10061-02-6	trans-1,3-Dichloropropene	0.2	< 0.2	U
110-75-8	2-Chloroethylvinylether	1.0	< 1.0	U
75-25-2	Bromoform	0.2	< 0.2	U
108-10-1	4-Methyl-2-Pentanone (MIBK)	5.0	< 5.0	U
591-78-6	2-Hexanone	5.0	< 5.0	U
127-18-4	**Tetrachloroethene**	**0.2**	**18**	
79-34-5	1,1,2,2-Tetrachloroethane	0.2	< 0.2	U
108-88-3	Toluene	0.2	< 0.2	U
108-90-7	Chlorobenzene	0.2	< 0.2	U
100-41-4	Ethylbenzene	0.2	< 0.2	U
100-42-5	Styrene	0.2	< 0.2	U
75-69-4	Trichlorofluoromethane	0.2	< 0.2	U

ANALYTICAL RESOURCES INCORPORATED

ORGANICS ANALYSIS DATA SHEET
Volatiles by Purge & Trap GC/MS-Method SW8260C **Sample ID: DW-08-071911**
 SAMPLE

Lab Sample ID: TE69E
LIMS ID: 11-15412
Matrix: Water
Date Analyzed: 07/20/11 20:00

QC Report No: TE69-The Boeing Company
Project: North Boeing Field
025082.311

CAS Number	Analyte	RL	Result	Q
76-13-1	1,1,2-Trichloro-1,2,2-trifluoroe	0.2	< 0.2	U
179601-23-1	m,p-Xylene	0.4	< 0.4	U
95-47-6	o-Xylene	0.2	< 0.2	U
95-50-1	1,2-Dichlorobenzene	0.2	< 0.2	U
541-73-1	1,3-Dichlorobenzene	0.2	< 0.2	U
106-46-7	1,4-Dichlorobenzene	0.2	< 0.2	U
107-02-8	Acrolein	5.0	< 5.0	U
74-88-4	Methyl Iodide	1.0	< 1.0	U
74-96-4	Bromoethane	0.2	< 0.2	U
107-13-1	Acrylonitrile	1.0	< 1.0	U
563-58-6	1,1-Dichloropropene	0.2	< 0.2	U
74-95-3	Dibromomethane	0.2	< 0.2	U
630-20-6	1,1,1,2-Tetrachloroethane	0.2	< 0.2	U
96-12-8	1,2-Dibromo-3-chloropropane	0.5	< 0.5	U
96-18-4	1,2,3-Trichloropropane	0.5	< 0.5	U
110-57-6	trans-1,4-Dichloro-2-butene	1.0	< 1.0	U
108-67-8	1,3,5-Trimethylbenzene	0.2	< 0.2	U
95-63-6	1,2,4-Trimethylbenzene	0.2	< 0.2	U
87-68-3	Hexachlorobutadiene	0.5	< 0.5	U
106-93-4	Ethylene Dibromide	0.2	< 0.2	U
74-97-5	Bromochloromethane	0.2	< 0.2	U
594-20-7	2,2-Dichloropropane	0.2	< 0.2	U
142-28-9	1,3-Dichloropropane	0.2	< 0.2	U
98-82-8	Isopropylbenzene	0.2	< 0.2	U
103-65-1	n-Propylbenzene	0.2	< 0.2	U
108-86-1	Bromobenzene	0.2	< 0.2	U
95-49-8	2-Chlorotoluene	0.2	< 0.2	U
106-43-4	4-Chlorotoluene	0.2	< 0.2	U
98-06-6	tert-Butylbenzene	0.2	< 0.2	U
135-98-8	sec-Butylbenzene	0.2	< 0.2	U
99-87-6	4-Isopropyltoluene	0.2	< 0.2	U
104-51-8	n-Butylbenzene	0.2	< 0.2	U
120-82-1	1,2,4-Trichlorobenzene	0.5	< 0.5	U
91-20-3	Naphthalene	0.5	< 0.5	U
87-61-6	1,2,3-Trichlorobenzene	0.5	< 0.5	U

Reported in µg/L (ppb)

Volatile Surrogate Recovery

d4-1,2-Dichloroethane	87.8%
d8-Toluene	97.7%
Bromofluorobenzene	94.9%
d4-1,2-Dichlorobenzene	97.0%

2-Chloroethylvinylether is an acid labile compound and may not be recovered from an acid preserved sample.

ANALYTICAL RESOURCES INCORPORATED

ORGANICS ANALYSIS DATA SHEET
Volatiles by Purge & Trap GC/MS-Method SW8260C **Sample ID: DW-07-071911**
 SAMPLE

Lab Sample ID: TE69F
LIMS ID: 11-15413
Matrix: Water
Data Release Authorized: VD
Reported: 07/21/11

QC Report No: TE69-The Boeing Company
Project: North Boeing Field
025082.311
Date Sampled: 07/19/11
Date Received: 07/19/11

Instrument/Analyst: NT3/PKC
Date Analyzed: 07/20/11 20:27

Sample Amount: 10.0 mL
Purge Volume: 10.0 mL

CAS Number	Analyte	RL	Result	Q
74-87-3	Chloromethane	0.5	< 0.5	U
74-83-9	Bromomethane	1.0	< 1.0	U
75-01-4	Vinyl Chloride	0.2	< 0.2	U
75-00-3	Chloroethane	0.2	< 0.2	U
75-09-2	Methylene Chloride	0.5	< 0.5	U
67-64-1	Acetone	5.0	< 5.0	U
75-15-0	Carbon Disulfide	0.2	< 0.2	U
75-35-4	1,1-Dichloroethene	0.2	< 0.2	U
75-34-3	1,1-Dichloroethane	0.2	< 0.2	U
156-60-5	trans-1,2-Dichloroethene	0.2	< 0.2	U
156-59-2	**cis-1,2-Dichloroethene**	**0.2**	**0.6**	
67-66-3	**Chloroform**	**0.2**	**1.3**	
107-06-2	1,2-Dichloroethane	0.2	< 0.2	U
78-93-3	2-Butanone	5.0	< 5.0	U
71-55-6	1,1,1-Trichloroethane	0.2	< 0.2	U
56-23-5	Carbon Tetrachloride	0.2	< 0.2	U
108-05-4	Vinyl Acetate	1.0	< 1.0	U
75-27-4	Bromodichloromethane	0.2	< 0.2	U
78-87-5	1,2-Dichloropropane	0.2	< 0.2	U
10061-01-5	cis-1,3-Dichloropropene	0.2	< 0.2	U
79-01-6	Trichloroethene	0.2	< 0.2	U
124-48-1	Dibromochloromethane	0.2	< 0.2	U
79-00-5	1,1,2-Trichloroethane	0.2	< 0.2	U
71-43-2	Benzene	0.2	< 0.2	U
10061-02-6	trans-1,3-Dichloropropene	0.2	< 0.2	U
110-75-8	2-Chloroethylvinylether	1.0	< 1.0	U
75-25-2	Bromoform	0.2	< 0.2	U
108-10-1	4-Methyl-2-Pentanone (MIBK)	5.0	< 5.0	U
591-78-6	2-Hexanone	5.0	< 5.0	U
127-18-4	Tetrachloroethene	0.2	< 0.2	U
79-34-5	1,1,2,2-Tetrachloroethane	0.2	< 0.2	U
108-88-3	Toluene	0.2	< 0.2	U
108-90-7	Chlorobenzene	0.2	< 0.2	U
100-41-4	Ethylbenzene	0.2	< 0.2	U
100-42-5	Styrene	0.2	< 0.2	U
75-69-4	Trichlorofluoromethane	0.2	< 0.2	U

ANALYTICAL RESOURCES INCORPORATED

ORGANICS ANALYSIS DATA SHEET
Volatiles by Purge & Trap GC/MS-Method SW8260C **Sample ID: DW-07-071911**
 SAMPLE

Lab Sample ID: TE69F
LIMS ID: 11-15413
Matrix: Water
Date Analyzed: 07/20/11 20:27

QC Report No: TE69-The Boeing Company
Project: North Boeing Field
025082.311

CAS Number	Analyte	RL	Result	Q
76-13-1	1,1,2-Trichloro-1,2,2-trifluoroe	0.2	< 0.2	U
179601-23-1	m,p-Xylene	0.4	< 0.4	U
95-47-6	o-Xylene	0.2	< 0.2	U
95-50-1	1,2-Dichlorobenzene	0.2	< 0.2	U
541-73-1	1,3-Dichlorobenzene	0.2	< 0.2	U
106-46-7	1,4-Dichlorobenzene	0.2	< 0.2	U
107-02-8	Acrolein	5.0	< 5.0	U
74-88-4	Methyl Iodide	1.0	< 1.0	U
74-96-4	Bromoethane	0.2	< 0.2	U
107-13-1	Acrylonitrile	1.0	< 1.0	U
563-58-6	1,1-Dichloropropene	0.2	< 0.2	U
74-95-3	Dibromomethane	0.2	< 0.2	U
630-20-6	1,1,1,2-Tetrachloroethane	0.2	< 0.2	U
96-12-8	1,2-Dibromo-3-chloropropane	0.5	< 0.5	U
96-18-4	1,2,3-Trichloropropane	0.5	< 0.5	U
110-57-6	trans-1,4-Dichloro-2-butene	1.0	< 1.0	U
108-67-8	1,3,5-Trimethylbenzene	0.2	< 0.2	U
95-63-6	1,2,4-Trimethylbenzene	0.2	< 0.2	U
87-68-3	Hexachlorobutadiene	0.5	< 0.5	U
106-93-4	Ethylene Dibromide	0.2	< 0.2	U
74-97-5	Bromochloromethane	0.2	< 0.2	U
594-20-7	2,2-Dichloropropane	0.2	< 0.2	U
142-28-9	1,3-Dichloropropane	0.2	< 0.2	U
98-82-8	Isopropylbenzene	0.2	< 0.2	U
103-65-1	n-Propylbenzene	0.2	< 0.2	U
108-86-1	Bromobenzene	0.2	< 0.2	U
95-49-8	2-Chlorotoluene	0.2	< 0.2	U
106-43-4	4-Chlorotoluene	0.2	< 0.2	U
98-06-6	tert-Butylbenzene	0.2	< 0.2	U
135-98-8	sec-Butylbenzene	0.2	< 0.2	U
99-87-6	4-Isopropyltoluene	0.2	< 0.2	U
104-51-8	n-Butylbenzene	0.2	< 0.2	U
120-82-1	1,2,4-Trichlorobenzene	0.5	< 0.5	U
91-20-3	Naphthalene	0.5	< 0.5	U
87-61-6	1,2,3-Trichlorobenzene	0.5	< 0.5	U

Reported in µg/L (ppb)

Volatile Surrogate Recovery

d4-1,2-Dichloroethane	86.6%
d8-Toluene	98.1%
Bromofluorobenzene	93.7%
d4-1,2-Dichlorobenzene	97.4%

2-Chloroethylvinylether is an acid labile compound and may not be recovered from an acid preserved sample.

ANALYTICAL RESOURCES INCORPORATED

ORGANICS ANALYSIS DATA SHEET
Volatiles by Purge & Trap GC/MS-Method SW8260C **Sample ID: DW-10-071911**
 SAMPLE

Lab Sample ID: TE69G
LIMS ID: 11-15414
Matrix: Water
Data Release Authorized: VD
Reported: 07/21/11

QC Report No: TE69-The Boeing Company
Project: North Boeing Field
025082.311
Date Sampled: 07/19/11
Date Received: 07/19/11

Instrument/Analyst: NT3/PKC
Date Analyzed: 07/20/11 20:54

Sample Amount: 10.0 mL
Purge Volume: 10.0 mL

CAS Number	Analyte	RL	Result	Q
74-87-3	Chloromethane	0.5	< 0.5	U
74-83-9	Bromomethane	1.0	< 1.0	U
75-01-4	Vinyl Chloride	0.2	< 0.2	U
75-00-3	Chloroethane	0.2	< 0.2	U
75-09-2	Methylene Chloride	0.5	< 0.5	U
67-64-1	**Acetone**	**5.0**	**5.0**	**Q**
75-15-0	Carbon Disulfide	0.2	< 0.2	U
75-35-4	1,1-Dichloroethene	0.2	< 0.2	U
75-34-3	1,1-Dichloroethane	0.2	< 0.2	U
156-60-5	trans-1,2-Dichloroethene	0.2	< 0.2	U
156-59-2	cis-1,2-Dichloroethene	0.2	< 0.2	U
67-66-3	**Chloroform**	**0.2**	**12**	
107-06-2	1,2-Dichloroethane	0.2	< 0.2	U
78-93-3	2-Butanone	5.0	< 5.0	U
71-55-6	1,1,1-Trichloroethane	0.2	< 0.2	U
56-23-5	Carbon Tetrachloride	0.2	< 0.2	U
108-05-4	Vinyl Acetate	1.0	< 1.0	U
75-27-4	**Bromodichloromethane**	**0.2**	**0.2**	
78-87-5	1,2-Dichloropropane	0.2	< 0.2	U
10061-01-5	cis-1,3-Dichloropropene	0.2	< 0.2	U
79-01-6	Trichloroethene	0.2	< 0.2	U
124-48-1	Dibromochloromethane	0.2	< 0.2	U
79-00-5	1,1,2-Trichloroethane	0.2	< 0.2	U
71-43-2	Benzene	0.2	< 0.2	U
10061-02-6	trans-1,3-Dichloropropene	0.2	< 0.2	U
110-75-8	2-Chloroethylvinylether	1.0	< 1.0	U
75-25-2	Bromoform	0.2	< 0.2	U
108-10-1	4-Methyl-2-Pentanone (MIBK)	5.0	< 5.0	U
591-78-6	2-Hexanone	5.0	< 5.0	U
127-18-4	Tetrachloroethene	0.2	< 0.2	U
79-34-5	1,1,2,2-Tetrachloroethane	0.2	< 0.2	U
108-88-3	Toluene	0.2	< 0.2	U
108-90-7	Chlorobenzene	0.2	< 0.2	U
100-41-4	Ethylbenzene	0.2	< 0.2	U
100-42-5	Styrene	0.2	< 0.2	U
75-69-4	Trichlorofluoromethane	0.2	< 0.2	U

ANALYTICAL RESOURCES INCORPORATED

ORGANICS ANALYSIS DATA SHEET
Volatiles by Purge & Trap GC/MS-Method SW8260C **Sample ID: DW-10-071911**
 SAMPLE

Lab Sample ID: TE69G
LIMS ID: 11-15414
Matrix: Water
Date Analyzed: 07/20/11 20:54

QC Report No: TE69-The Boeing Company
Project: North Boeing Field
025082.311

CAS Number	Analyte	RL	Result	Q
76-13-1	1,1,2-Trichloro-1,2,2-trifluoroe	0.2	< 0.2	U
179601-23-1	m,p-Xylene	0.4	< 0.4	U
95-47-6	o-Xylene	0.2	< 0.2	U
95-50-1	1,2-Dichlorobenzene	0.2	< 0.2	U
541-73-1	1,3-Dichlorobenzene	0.2	< 0.2	U
106-46-7	1,4-Dichlorobenzene	0.2	< 0.2	U
107-02-8	Acrolein	5.0	< 5.0	U
74-88-4	Methyl Iodide	1.0	< 1.0	U
74-96-4	Bromoethane	0.2	< 0.2	U
107-13-1	Acrylonitrile	1.0	< 1.0	U
563-58-6	1,1-Dichloropropene	0.2	< 0.2	U
74-95-3	Dibromomethane	0.2	< 0.2	U
630-20-6	1,1,1,2-Tetrachloroethane	0.2	< 0.2	U
96-12-8	1,2-Dibromo-3-chloropropane	0.5	< 0.5	U
96-18-4	1,2,3-Trichloropropane	0.5	< 0.5	U
110-57-6	trans-1,4-Dichloro-2-butene	1.0	< 1.0	U
108-67-8	1,3,5-Trimethylbenzene	0.2	< 0.2	U
95-63-6	1,2,4-Trimethylbenzene	0.2	< 0.2	U
87-68-3	Hexachlorobutadiene	0.5	< 0.5	U
106-93-4	Ethylene Dibromide	0.2	< 0.2	U
74-97-5	Bromochloromethane	0.2	< 0.2	U
594-20-7	2,2-Dichloropropane	0.2	< 0.2	U
142-28-9	1,3-Dichloropropane	0.2	< 0.2	U
98-82-8	Isopropylbenzene	0.2	< 0.2	U
103-65-1	n-Propylbenzene	0.2	< 0.2	U
108-86-1	Bromobenzene	0.2	< 0.2	U
95-49-8	2-Chlorotoluene	0.2	< 0.2	U
106-43-4	4-Chlorotoluene	0.2	< 0.2	U
98-06-6	tert-Butylbenzene	0.2	< 0.2	U
135-98-8	sec-Butylbenzene	0.2	< 0.2	U
99-87-6	4-Isopropyltoluene	0.2	< 0.2	U
104-51-8	n-Butylbenzene	0.2	< 0.2	U
120-82-1	1,2,4-Trichlorobenzene	0.5	< 0.5	U
91-20-3	Naphthalene	0.5	< 0.5	U
87-61-6	1,2,3-Trichlorobenzene	0.5	< 0.5	U

Reported in µg/L (ppb)

Volatile Surrogate Recovery

d4-1,2-Dichloroethane	88.1%
d8-Toluene	98.0%
Bromofluorobenzene	93.8%
d4-1,2-Dichlorobenzene	97.6%

2-Chloroethylvinylether is an acid labile compound and may not be recovered from an acid preserved sample.

ANALYTICAL RESOURCES INCORPORATED

ORGANICS ANALYSIS DATA SHEET
Volatiles by Purge & Trap GC/MS-Method SW8260C **Sample ID: Trip Blanks**
 SAMPLE

Lab Sample ID: TE69H
LIMS ID: 11-15415
Matrix: Water
Data Release Authorized: WD
Reported: 07/21/11

QC Report No: TE69-The Boeing Company
Project: North Boeing Field
025082.311
Date Sampled: 07/19/11
Date Received: 07/19/11

Instrument/Analyst: NT3/PKC
Date Analyzed: 07/20/11 11:56

Sample Amount: 10.0 mL
Purge Volume: 10.0 mL

CAS Number	Analyte	RL	Result	Q
74-87-3	Chloromethane	0.5	< 0.5	U
74-83-9	Bromomethane	1.0	< 1.0	U
75-01-4	Vinyl Chloride	0.2	< 0.2	U
75-00-3	Chloroethane	0.2	< 0.2	U
75-09-2	Methylene Chloride	0.5	< 0.5	U
67-64-1	Acetone	5.0	< 5.0	U
75-15-0	Carbon Disulfide	0.2	< 0.2	U
75-35-4	1,1-Dichloroethene	0.2	< 0.2	U
75-34-3	1,1-Dichloroethane	0.2	< 0.2	U
156-60-5	trans-1,2-Dichloroethene	0.2	< 0.2	U
156-59-2	cis-1,2-Dichloroethene	0.2	< 0.2	U
67-66-3	Chloroform	0.2	< 0.2	U
107-06-2	1,2-Dichloroethane	0.2	< 0.2	U
78-93-3	2-Butanone	5.0	< 5.0	U
71-55-6	1,1,1-Trichloroethane	0.2	< 0.2	U
56-23-5	Carbon Tetrachloride	0.2	< 0.2	U
108-05-4	Vinyl Acetate	1.0	< 1.0	U
75-27-4	Bromodichloromethane	0.2	< 0.2	U
78-87-5	1,2-Dichloropropane	0.2	< 0.2	U
10061-01-5	cis-1,3-Dichloropropene	0.2	< 0.2	U
79-01-6	Trichloroethene	0.2	< 0.2	U
124-48-1	Dibromochloromethane	0.2	< 0.2	U
79-00-5	1,1,2-Trichloroethane	0.2	< 0.2	U
71-43-2	Benzene	0.2	< 0.2	U
10061-02-6	trans-1,3-Dichloropropene	0.2	< 0.2	U
110-75-8	2-Chloroethylvinylether	1.0	< 1.0	U
75-25-2	Bromoform	0.2	< 0.2	U
108-10-1	4-Methyl-2-Pentanone (MIBK)	5.0	< 5.0	U
591-78-6	2-Hexanone	5.0	< 5.0	U
127-18-4	Tetrachloroethene	0.2	< 0.2	U
79-34-5	1,1,2,2-Tetrachloroethane	0.2	< 0.2	U
108-88-3	Toluene	0.2	< 0.2	U
108-90-7	Chlorobenzene	0.2	< 0.2	U
100-41-4	Ethylbenzene	0.2	< 0.2	U
100-42-5	Styrene	0.2	< 0.2	U
75-69-4	Trichlorofluoromethane	0.2	< 0.2	U

ANALYTICAL RESOURCES INCORPORATED

ORGANICS ANALYSIS DATA SHEET
Volatiles by Purge & Trap GC/MS-Method SW8260C **Sample ID: Trip Blanks**
 SAMPLE

Lab Sample ID: TE69H
LIMS ID: 11-15415
Matrix: Water
Date Analyzed: 07/20/11 11:56

QC Report No: TE69-The Boeing Company
Project: North Boeing Field
025082.311

CAS Number	Analyte	RL	Result	Q
76-13-1	1,1,2-Trichloro-1,2,2-trifluoroe	0.2	< 0.2	U
179601-23-1	m,p-Xylene	0.4	< 0.4	U
95-47-6	o-Xylene	0.2	< 0.2	U
95-50-1	1,2-Dichlorobenzene	0.2	< 0.2	U
541-73-1	1,3-Dichlorobenzene	0.2	< 0.2	U
106-46-7	1,4-Dichlorobenzene	0.2	< 0.2	U
107-02-8	Acrolein	5.0	< 5.0	U
74-88-4	Methyl Iodide	1.0	< 1.0	U
74-96-4	Bromoethane	0.2	< 0.2	U
107-13-1	Acrylonitrile	1.0	< 1.0	U
563-58-6	1,1-Dichloropropene	0.2	< 0.2	U
74-95-3	Dibromomethane	0.2	< 0.2	U
630-20-6	1,1,1,2-Tetrachloroethane	0.2	< 0.2	U
96-12-8	1,2-Dibromo-3-chloropropane	0.5	< 0.5	U
96-18-4	1,2,3-Trichloropropane	0.5	< 0.5	U
110-57-6	trans-1,4-Dichloro-2-butene	1.0	< 1.0	U
108-67-8	1,3,5-Trimethylbenzene	0.2	< 0.2	U
95-63-6	1,2,4-Trimethylbenzene	0.2	< 0.2	U
87-68-3	Hexachlorobutadiene	0.5	< 0.5	U
106-93-4	Ethylene Dibromide	0.2	< 0.2	U
74-97-5	Bromochloromethane	0.2	< 0.2	U
594-20-7	2,2-Dichloropropane	0.2	< 0.2	U
142-28-9	1,3-Dichloropropane	0.2	< 0.2	U
98-82-8	Isopropylbenzene	0.2	< 0.2	U
103-65-1	n-Propylbenzene	0.2	< 0.2	U
108-86-1	Bromobenzene	0.2	< 0.2	U
95-49-8	2-Chlorotoluene	0.2	< 0.2	U
106-43-4	4-Chlorotoluene	0.2	< 0.2	U
98-06-6	tert-Butylbenzene	0.2	< 0.2	U
135-98-8	sec-Butylbenzene	0.2	< 0.2	U
99-87-6	4-Isopropyltoluene	0.2	< 0.2	U
104-51-8	n-Butylbenzene	0.2	< 0.2	U
120-82-1	1,2,4-Trichlorobenzene	0.5	< 0.5	U
91-20-3	Naphthalene	0.5	< 0.5	U
87-61-6	1,2,3-Trichlorobenzene	0.5	< 0.5	U

Reported in µg/L (ppb)

Volatile Surrogate Recovery

d4-1,2-Dichloroethane	85.7%
d8-Toluene	98.8%
Bromofluorobenzene	95.2%
d4-1,2-Dichlorobenzene	96.6%

2-Chloroethylvinylether is an acid labile compound and may not be recovered from an acid preserved sample.

ANALYTICAL RESOURCES INCORPORATED

ORGANICS ANALYSIS DATA SHEET
Volatiles by Purge & Trap GC/MS-Method SW8260C **Sample ID: MB-072011**
 METHOD BLANK

Lab Sample ID: MB-072011
LIMS ID: 11-15408
Matrix: Water
Data Release Authorized: VT
Reported: 07/21/11

QC Report No: TE69-The Boeing Company
Project: North Boeing Field
025082.311
Date Sampled: NA
Date Received: NA

Instrument/Analyst: NT3/PKC
Date Analyzed: 07/20/11 11:24

Sample Amount: 10.0 mL
Purge Volume: 10.0 mL

CAS Number	Analyte	RL	Result	Q
74-87-3	Chloromethane	0.5	< 0.5	U
74-83-9	Bromomethane	1.0	< 1.0	U
75-01-4	Vinyl Chloride	0.2	< 0.2	U
75-00-3	Chloroethane	0.2	< 0.2	U
75-09-2	Methylene Chloride	0.5	< 0.5	U
67-64-1	Acetone	5.0	< 5.0	U
75-15-0	Carbon Disulfide	0.2	< 0.2	U
75-35-4	1,1-Dichloroethene	0.2	< 0.2	U
75-34-3	1,1-Dichloroethane	0.2	< 0.2	U
156-60-5	trans-1,2-Dichloroethene	0.2	< 0.2	U
156-59-2	cis-1,2-Dichloroethene	0.2	< 0.2	U
67-66-3	Chloroform	0.2	< 0.2	U
107-06-2	1,2-Dichloroethane	0.2	< 0.2	U
78-93-3	2-Butanone	5.0	< 5.0	U
71-55-6	1,1,1-Trichloroethane	0.2	< 0.2	U
56-23-5	Carbon Tetrachloride	0.2	< 0.2	U
108-05-4	Vinyl Acetate	1.0	< 1.0	U
75-27-4	Bromodichloromethane	0.2	< 0.2	U
78-87-5	1,2-Dichloropropane	0.2	< 0.2	U
10061-01-5	cis-1,3-Dichloropropene	0.2	< 0.2	U
79-01-6	Trichloroethene	0.2	< 0.2	U
124-48-1	Dibromochloromethane	0.2	< 0.2	U
79-00-5	1,1,2-Trichloroethane	0.2	< 0.2	U
71-43-2	Benzene	0.2	< 0.2	U
10061-02-6	trans-1,3-Dichloropropene	0.2	< 0.2	U
110-75-8	2-Chloroethylvinylether	1.0	< 1.0	U
75-25-2	Bromoform	0.2	< 0.2	U
108-10-1	4-Methyl-2-Pentanone (MIBK)	5.0	< 5.0	U
591-78-6	2-Hexanone	5.0	< 5.0	U
127-18-4	Tetrachloroethene	0.2	< 0.2	U
79-34-5	1,1,2,2-Tetrachloroethane	0.2	< 0.2	U
108-88-3	Toluene	0.2	< 0.2	U
108-90-7	Chlorobenzene	0.2	< 0.2	U
100-41-4	Ethylbenzene	0.2	< 0.2	U
100-42-5	Styrene	0.2	< 0.2	U
75-69-4	Trichlorofluoromethane	0.2	< 0.2	U

ANALYTICAL RESOURCES INCORPORATED

ORGANICS ANALYSIS DATA SHEET
Volatiles by Purge & Trap GC/MS-Method SW8260C **Sample ID: MB-072011**
 METHOD BLANK

Lab Sample ID: MB-072011
LIMS ID: 11-15408
Matrix: Water
Date Analyzed: 07/20/11 11:24

QC Report No: TE69-The Boeing Company
Project: North Boeing Field
025082.311

CAS Number	Analyte	RL	Result	Q
76-13-1	1,1,2-Trichloro-1,2,2-trifluoroe	0.2	< 0.2	U
179601-23-1	m,p-Xylene	0.4	< 0.4	U
95-47-6	o-Xylene	0.2	< 0.2	U
95-50-1	1,2-Dichlorobenzene	0.2	< 0.2	U
541-73-1	1,3-Dichlorobenzene	0.2	< 0.2	U
106-46-7	1,4-Dichlorobenzene	0.2	< 0.2	U
107-02-8	Acrolein	5.0	< 5.0	U
74-88-4	Methyl Iodide	1.0	< 1.0	U
74-96-4	Bromoethane	0.2	< 0.2	U
107-13-1	Acrylonitrile	1.0	< 1.0	U
563-58-6	1,1-Dichloropropene	0.2	< 0.2	U
74-95-3	Dibromomethane	0.2	< 0.2	U
630-20-6	1,1,1,2-Tetrachloroethane	0.2	< 0.2	U
96-12-8	1,2-Dibromo-3-chloropropane	0.5	< 0.5	U
96-18-4	1,2,3-Trichloropropane	0.5	< 0.5	U
110-57-6	trans-1,4-Dichloro-2-butene	1.0	< 1.0	U
108-67-8	1,3,5-Trimethylbenzene	0.2	< 0.2	U
95-63-6	1,2,4-Trimethylbenzene	0.2	< 0.2	U
87-68-3	Hexachlorobutadiene	0.5	< 0.5	U
106-93-4	Ethylene Dibromide	0.2	< 0.2	U
74-97-5	Bromochloromethane	0.2	< 0.2	U
594-20-7	2,2-Dichloropropane	0.2	< 0.2	U
142-28-9	1,3-Dichloropropane	0.2	< 0.2	U
98-82-8	Isopropylbenzene	0.2	< 0.2	U
103-65-1	n-Propylbenzene	0.2	< 0.2	U
108-86-1	Bromobenzene	0.2	< 0.2	U
95-49-8	2-Chlorotoluene	0.2	< 0.2	U
106-43-4	4-Chlorotoluene	0.2	< 0.2	U
98-06-6	tert-Butylbenzene	0.2	< 0.2	U
135-98-8	sec-Butylbenzene	0.2	< 0.2	U
99-87-6	4-Isopropyltoluene	0.2	< 0.2	U
104-51-8	n-Butylbenzene	0.2	< 0.2	U
120-82-1	1,2,4-Trichlorobenzene	0.5	< 0.5	U
91-20-3	Naphthalene	0.5	< 0.5	U
87-61-6	**1,2,3-Trichlorobenzene**	**0.5**	**0.6**	

Reported in µg/L (ppb)

Volatile Surrogate Recovery

d4-1,2-Dichloroethane	87.8%
d8-Toluene	99.3%
Bromofluorobenzene	93.8%
d4-1,2-Dichlorobenzene	98.3%

ANALYTICAL RESOURCES INCORPORATED

VOA SURROGATE RECOVERY SUMMARY

Matrix: Water

QC Report No: TE69-The Boeing Company
Project: North Boeing Field
025082.311

ARI ID	Client ID	PV	DCE	TOL	BFB	DCB	TOT OUT
MB-072011	Method Blank	10	87.8%	99.3%	93.8%	98.3%	0
LCS-072011	Lab Control	10	88.6%	99.1%	97.4%	96.6%	0
LCSD-072011	Lab Control Dup	10	88.2%	98.8%	97.9%	93.7%	0
TE69A	DW-03-071911	10	87.6%	98.8%	93.6%	98.0%	0
TE69B	DW-04-071911	10	88.0%	98.4%	93.4%	99.3%	0
TE69C	NBF-DTS-PRETREAT-071911	10	86.2%	99.0%	93.6%	98.5%	0
TE69D	NBF-DTS-PREGAC-071911	10	88.2%	99.2%	94.3%	98.1%	0
TE69E	DW-08-071911	10	87.8%	97.7%	94.9%	97.0%	0
TE69F	DW-07-071911	10	86.6%	98.1%	93.7%	97.4%	0
TE69G	DW-10-071911	10	88.1%	98.0%	93.8%	97.6%	0
TE69H	Trip Blanks	10	85.7%	98.8%	95.2%	96.6%	0

SW8260C	LCS/MB LIMITS	QC LIMITS
(DCE) = d4-1,2-Dichloroethane	80-120	80-120
(TOL) = d8-Toluene	80-120	80-120
(BFB) = Bromofluorobenzene	80-120	80-120
(DCB) = d4-1,2-Dichlorobenzene	80-120	80-120

Prep Method: SW5030B
Log Number Range: 11-15408 to 11-15415

ANALYTICAL RESOURCES INCORPORATED

ORGANICS ANALYSIS DATA SHEET
Volatiles by Purge & Trap GC/MS-Method SW8260C **Sample ID: LCS-072011**
 LAB CONTROL SAMPLE

Lab Sample ID: LCS-072011
LIMS ID: 11-15408
Matrix: Water
Data Release Authorized: VB
Reported: 07/21/11

QC Report No: TE69-The Boeing Company
Project: North Boeing Field
025082.311
Date Sampled: NA
Date Received: NA

Instrument/Analyst LCS: NT3/PKC
LCSD: NT3/PKC
Date Analyzed LCS: 07/20/11 10:29
LCSD: 07/20/11 10:57

Sample Amount LCS: 10.0 mL
LCSD: 10.0 mL
Purge Volume LCS: 10.0 mL
LCSD: 10.0 mL

Analyte	LCS	Spike Added-LCS	LCS Recovery	LCSD	Spike Added-LCSD	LCSD Recovery	RPD
Chloromethane	9.4	10.0	94.0%	9.0	10.0	90.0%	4.3%
Bromomethane	9.4	10.0	94.0%	9.1	10.0	91.0%	3.2%
Vinyl Chloride	9.6	10.0	96.0%	9.4	10.0	94.0%	2.1%
Chloroethane	9.0	10.0	90.0%	8.6	10.0	86.0%	4.5%
Methylene Chloride	9.2	10.0	92.0%	9.0	10.0	90.0%	2.2%
Acetone	37.7 Q	50.0	75.4%	39.1 Q	50.0	78.2%	3.6%
Carbon Disulfide	9.6	10.0	96.0%	9.2	10.0	92.0%	4.3%
1,1-Dichloroethene	9.6	10.0	96.0%	9.1	10.0	91.0%	5.3%
1,1-Dichloroethane	9.4	10.0	94.0%	9.0	10.0	90.0%	4.3%
trans-1,2-Dichloroethene	9.7	10.0	97.0%	9.5	10.0	95.0%	2.1%
cis-1,2-Dichloroethene	9.3	10.0	93.0%	8.8	10.0	88.0%	5.5%
Chloroform	9.3	10.0	93.0%	9.1	10.0	91.0%	2.2%
1,2-Dichloroethane	9.2	10.0	92.0%	8.9	10.0	89.0%	3.3%
2-Butanone	40.0 Q	50.0	80.0%	38.2 Q	50.0	76.4%	4.6%
1,1,1-Trichloroethane	10.1	10.0	101%	9.6	10.0	96.0%	5.1%
Carbon Tetrachloride	10.0	10.0	100%	9.9	10.0	99.0%	1.0%
Vinyl Acetate	7.9 Q	10.0	79.0%	7.7 Q	10.0	77.0%	2.6%
Bromodichloromethane	8.9	10.0	89.0%	8.9	10.0	89.0%	0.0%
1,2-Dichloropropane	9.0	10.0	90.0%	8.9	10.0	89.0%	1.1%
cis-1,3-Dichloropropene	9.1	10.0	91.0%	9.0	10.0	90.0%	1.1%
Trichloroethene	10.1	10.0	101%	9.8	10.0	98.0%	3.0%
Dibromochloromethane	9.4	10.0	94.0%	9.0	10.0	90.0%	4.3%
1,1,2-Trichloroethane	8.5	10.0	85.0%	8.2	10.0	82.0%	3.6%
Benzene	9.8	10.0	98.0%	9.6	10.0	96.0%	2.1%
trans-1,3-Dichloropropene	9.0	10.0	90.0%	8.7	10.0	87.0%	3.4%
2-Chloroethylvinylether	8.4	10.0	84.0%	8.3	10.0	83.0%	1.2%
Bromoform	9.2	10.0	92.0%	8.8	10.0	88.0%	4.4%
4-Methyl-2-Pentanone (MIBK)	41.7	50.0	83.4%	41.6	50.0	83.2%	0.2%
2-Hexanone	44.3	50.0	88.6%	42.2	50.0	84.4%	4.9%
Tetrachloroethene	10.3	10.0	103%	10.2	10.0	102%	1.0%
1,1,2,2-Tetrachloroethane	8.7	10.0	87.0%	8.4	10.0	84.0%	3.5%
Toluene	9.8	10.0	98.0%	9.5	10.0	95.0%	3.1%
Chlorobenzene	9.8	10.0	98.0%	9.8	10.0	98.0%	0.0%
Ethylbenzene	10.6	10.0	106%	10.2	10.0	102%	3.8%
Styrene	9.8	10.0	98.0%	9.9	10.0	99.0%	1.0%
Trichlorofluoromethane	9.9	10.0	99.0%	9.6	10.0	96.0%	3.1%
1,1,2-Trichloro-1,2,2-trifluoroetha	9.6	10.0	96.0%	9.4	10.0	94.0%	2.1%
m,p-Xylene	21.3	20.0	106%	20.6	20.0	103%	3.3%

ANALYTICAL RESOURCES INCORPORATED

ORGANICS ANALYSIS DATA SHEET
Volatiles by Purge & Trap GC/MS-Method SW8260C **Sample ID: LCS-072011**
 LAB CONTROL SAMPLE

Lab Sample ID: LCS-072011
LIMS ID: 11-15408
Matrix: Water

QC Report No: TE69-The Boeing Company
Project: North Boeing Field
025082.311

Analyte	LCS	Spike Added-LCS	LCS Recovery	LCSD	Spike Added-LCSD	LCSD Recovery	RPD
o-Xylene	10.1	10.0	101%	9.8	10.0	98.0%	3.0%
1,2-Dichlorobenzene	9.2	10.0	92.0%	8.9	10.0	89.0%	3.3%
1,3-Dichlorobenzene	9.4	10.0	94.0%	9.2	10.0	92.0%	2.2%
1,4-Dichlorobenzene	9.4	10.0	94.0%	9.3	10.0	93.0%	1.1%
Acrolein	43.4	50.0	86.8%	42.0	50.0	84.0%	3.3%
Methyl Iodide	9.2	10.0	92.0%	9.1	10.0	91.0%	1.1%
Bromoethane	9.7	10.0	97.0%	9.2	10.0	92.0%	5.3%
Acrylonitrile	8.0	10.0	80.0%	7.9	10.0	79.0%	1.3%
1,1-Dichloropropene	10.2	10.0	102%	10.0	10.0	100%	2.0%
Dibromomethane	9.0	10.0	90.0%	9.0	10.0	90.0%	0.0%
1,1,1,2-Tetrachloroethane	9.8	10.0	98.0%	9.4	10.0	94.0%	4.2%
1,2-Dibromo-3-chloropropane	7.6 Q	10.0	76.0%	8.0 Q	10.0	80.0%	5.1%
1,2,3-Trichloropropane	8.7	10.0	87.0%	8.8	10.0	88.0%	1.1%
trans-1,4-Dichloro-2-butene	10.0	10.0	100%	10.0	10.0	100%	0.0%
1,3,5-Trimethylbenzene	10.8	10.0	108%	10.5	10.0	105%	2.8%
1,2,4-Trimethylbenzene	10.5	10.0	105%	10.2	10.0	102%	2.9%
Hexachlorobutadiene	8.8	10.0	88.0%	8.5	10.0	85.0%	3.5%
Ethylene Dibromide	9.0	10.0	90.0%	8.7	10.0	87.0%	3.4%
Bromochloromethane	8.3	10.0	83.0%	8.4	10.0	84.0%	1.2%
2,2-Dichloropropane	10.2	10.0	102%	9.5	10.0	95.0%	7.1%
1,3-Dichloropropane	9.5	10.0	95.0%	9.1	10.0	91.0%	4.3%
Isopropylbenzene	11.0	10.0	110%	10.8	10.0	108%	1.8%
n-Propylbenzene	11.0	10.0	110%	10.7	10.0	107%	2.8%
Bromobenzene	9.8	10.0	98.0%	9.4	10.0	94.0%	4.2%
2-Chlorotoluene	10.2	10.0	102%	10.0	10.0	100%	2.0%
4-Chlorotoluene	10.5	10.0	105%	10.0	10.0	100%	4.9%
tert-Butylbenzene	10.6	10.0	106%	10.5	10.0	105%	0.9%
sec-Butylbenzene	11.0	10.0	110%	10.6	10.0	106%	3.7%
4-Isopropyltoluene	11.0	10.0	110%	10.6	10.0	106%	3.7%
n-Butylbenzene	10.8	10.0	108%	10.3	10.0	103%	4.7%
1,2,4-Trichlorobenzene	8.3	10.0	83.0%	8.1	10.0	81.0%	2.4%
Naphthalene	7.6 Q	10.0	76.0%	7.4 Q	10.0	74.0%	2.7%
1,2,3-Trichlorobenzene	7.5 Q	10.0	75.0%	7.3 Q	10.0	73.0%	2.7%

Reported in µg/L (ppb)

RPD calculated using sample concentrations per SW846.

Volatile Surrogate Recovery

	LCS	LCSD
d4-1,2-Dichloroethane	88.6%	88.2%
d8-Toluene	99.1%	98.8%
Bromofluorobenzene	97.4%	97.9%
d4-1,2-Dichlorobenzene	96.6%	93.7%

ANALYTICAL RESOURCES INCORPORATED

ORGANICS ANALYSIS DATA SHEET
PCB by GC/ECD Method SW8082

Sample ID: DW-08-071911
SAMPLE

Lab Sample ID: TE69E
LIMS ID: 11-15412
Matrix: Water
Data Release Authorized:
Reported: 07/21/11

QC Report No: TE69-The Boeing Company
Project: North Boeing Field
025082.311
Date Sampled: 07/19/11
Date Received: 07/19/11

Date Extracted: 07/20/11
Date Analyzed: 07/20/11 20:01
Instrument/Analyst: ECD5/AAR
GPC Cleanup: No
Sulfur Cleanup: Yes

Sample Amount: 1000 mL
Final Extract Volume: 0.50 mL
Dilution Factor: 1.00
Silica Gel: Yes
Acid Cleanup: Yes

CAS Number	Analyte	RL	Result
12674-11-2	Aroclor 1016	0.010	< 0.010 U
53469-21-9	Aroclor 1242	0.010	< 0.010 U
12672-29-6	Aroclor 1248	0.010	< 0.010 U
11097-69-1	Aroclor 1254	0.010	< 0.010 U
11096-82-5	Aroclor 1260	0.010	< 0.010 U
11104-28-2	Aroclor 1221	0.010	< 0.010 U
11141-16-5	Aroclor 1232	0.010	< 0.010 U
37324-23-5	Aroclor 1262	0.010	< 0.010 U

Reported in µg/L (ppb)

PCB Surrogate Recovery

Decachlorobiphenyl	66.5%
Tetrachlorometaxylene	54.0%

ANALYTICAL RESOURCES INCORPORATED

ORGANICS ANALYSIS DATA SHEET
PCB by GC/ECD Method SW8082

Sample ID: DW-07-071911
SAMPLE

Lab Sample ID: TE69F
LIMS ID: 11-15413
Matrix: Water
Data Release Authorized: VD
Reported: 07/21/11

QC Report No: TE69-The Boeing Company
Project: North Boeing Field
025082.311
Date Sampled: 07/19/11
Date Received: 07/19/11

Date Extracted: 07/20/11
Date Analyzed: 07/20/11 20:20
Instrument/Analyst: ECD5/AAR
GPC Cleanup: No
Sulfur Cleanup: Yes

Sample Amount: 1000 mL
Final Extract Volume: 0.50 mL
Dilution Factor: 1.00
Silica Gel: Yes
Acid Cleanup: Yes

CAS Number	Analyte	RL	Result
12674-11-2	Aroclor 1016	0.010	< 0.010 U
53469-21-9	Aroclor 1242	0.010	< 0.010 U
12672-29-6	Aroclor 1248	0.010	< 0.010 U
11097-69-1	Aroclor 1254	0.010	< 0.010 U
11096-82-5	Aroclor 1260	0.010	< 0.010 U
11104-28-2	Aroclor 1221	0.010	< 0.010 U
11141-16-5	Aroclor 1232	0.010	< 0.010 U
37324-23-5	Aroclor 1262	0.010	< 0.010 U

Reported in µg/L (ppb)

PCB Surrogate Recovery

Decachlorobiphenyl	73.2%
Tetrachlorometaxylene	55.8%

ANALYTICAL RESOURCES INCORPORATED

ORGANICS ANALYSIS DATA SHEET
PCB by GC/ECD Method SW8082

Sample ID: DW-10-071911
SAMPLE

Lab Sample ID: TE69G
LIMS ID: 11-15414
Matrix: Water
Data Release Authorized: VB
Reported: 07/21/11

QC Report No: TE69-The Boeing Company
Project: North Boeing Field
025082.311
Date Sampled: 07/19/11
Date Received: 07/19/11

Date Extracted: 07/20/11
Date Analyzed: 07/20/11 20:39
Instrument/Analyst: ECD5/AAR
GPC Cleanup: No
Sulfur Cleanup: Yes

Sample Amount: 1000 mL
Final Extract Volume: 0.50 mL
Dilution Factor: 1.00
Silica Gel: Yes
Acid Cleanup: Yes

CAS Number	Analyte	RL	Result
12674-11-2	Aroclor 1016	0.010	< 0.010 U
53469-21-9	Aroclor 1242	0.010	< 0.010 U
12672-29-6	Aroclor 1248	0.010	< 0.010 U
11097-69-1	Aroclor 1254	0.010	< 0.010 U
11096-82-5	Aroclor 1260	0.010	< 0.010 U
11104-28-2	Aroclor 1221	0.010	< 0.010 U
11141-16-5	Aroclor 1232	0.010	< 0.010 U
37324-23-5	Aroclor 1262	0.010	< 0.010 U

Reported in µg/L (ppb)

PCB Surrogate Recovery

Decachlorobiphenyl	68.8%
Tetrachlorometaxylene	55.8%

ANALYTICAL RESOURCES INCORPORATED

ORGANICS ANALYSIS DATA SHEET
PCB by GC/ECD Method SW8082

Sample ID: MB-072011
METHOD BLANK

Lab Sample ID: MB-072011
LIMS ID: 11-15412
Matrix: Water
Data Release Authorized: VD
Reported: 07/21/11

QC Report No: TE69-The Boeing Company
Project: North Boeing Field
025082.311
Date Sampled: NA
Date Received: NA

Date Extracted: 07/20/11
Date Analyzed: 07/20/11 19:04
Instrument/Analyst: ECD5/AAR
GPC Cleanup: No
Sulfur Cleanup: Yes

Sample Amount: 1000 mL
Final Extract Volume: 0.50 mL
Dilution Factor: 1.00
Silica Gel: Yes
Acid Cleanup: Yes

CAS Number	Analyte	RL	Result
12674-11-2	Aroclor 1016	0.010	< 0.010 U
53469-21-9	Aroclor 1242	0.010	< 0.010 U
12672-29-6	Aroclor 1248	0.010	< 0.010 U
11097-69-1	Aroclor 1254	0.010	< 0.010 U
11096-82-5	Aroclor 1260	0.010	< 0.010 U
11104-28-2	Aroclor 1221	0.010	< 0.010 U
11141-16-5	Aroclor 1232	0.010	< 0.010 U
37324-23-5	Aroclor 1262	0.010	< 0.010 U

Reported in µg/L (ppb)

PCB Surrogate Recovery

Decachlorobiphenyl	67.2%
Tetrachlorometaxylene	56.8%

ANALYTICAL RESOURCES INCORPORATED

SW8082/PCB WATER SURROGATE RECOVERY SUMMARY

Matrix: Water

QC Report No: TE69-The Boeing Company
Project: North Boeing Field
025082.311

Client ID	DCBP % REC	DCBP LCL-UCL	TCMX % REC	TCMX LCL-UCL	TOT OUT
MB-072011	67.2%	32-108	56.8%	31-100	0
LCS-072011	66.2%	32-108	58.2%	31-100	0
LCSD-072011	71.8%	32-108	58.0%	31-100	0
DW-08-071911	66.5%	19-111	54.0%	21-100	0
DW-07-071911	73.2%	19-111	55.8%	21-100	0
DW-10-071911	68.8%	19-111	55.8%	21-100	0

Prep Method: SW3510C
Log Number Range: 11-15412 to 11-15414

FORM-II SW8082

ANALYTICAL RESOURCES INCORPORATED

ORGANICS ANALYSIS DATA SHEET
PCB by GC/ECD Method SW8082

Sample ID: LCS-072011
LCS/LCSD

Lab Sample ID: LCS-072011
LIMS ID: 11-15412
Matrix: Water
Data Release Authorized: VJB
Reported: 07/21/11

QC Report No: TE69-The Boeing Company
Project: North Boeing Field
025082.311
Date Sampled: NA
Date Received: NA

Date Extracted LCS/LCSD: 07/20/11

Date Analyzed LCS: 07/20/11 19:23
LCSD: 07/20/11 19:42
Instrument/Analyst LCS: ECD5/AAR
LCSD: ECD5/AAR
GPC Cleanup: No
Sulfur Cleanup: Yes

Sample Amount LCS: 1000 mL
LCSD: 1000 mL
Final Extract Volume LCS: 0.50 mL
LCSD: 0.50 mL
Dilution Factor LCS: 1.00
LCSD: 1.00
Silica Gel: Yes
Acid Cleanup: Yes

Analyte	LCS	Spike Added-LCS	LCS Recovery	LCSD	Spike Added-LCSD	LCSD Recovery	RPD
Aroclor 1016	0.033	0.050	66.0%	0.043	0.050	86.0%	26.3%
Aroclor 1260	0.039	0.050	78.0%	0.050	0.050	100%	24.7%

PCB Surrogate Recovery

	LCS	LCSD
Decachlorobiphenyl	66.2%	71.8%
Tetrachlorometaxylene	58.2%	58.0%

Results reported in µg/L
RPD calculated using sample concentrations per SW846.

ANALYTICAL RESOURCES INCORPORATED

ORGANICS ANALYSIS DATA SHEET
TOTAL DIESEL RANGE HYDROCARBONS
NWTPHD by GC/FID-Silica and Acid Cleaned
Page 1 of 1
Matrix: Water

QC Report No: TE69-The Boeing Company
Project: North Boeing Field
025082.311

Data Release Authorized: VB
Reported: 07/21/11

ARI ID	Sample ID	Extraction Date	Analysis Date	EFV DL	Range	RL	Result
MB-072011	Method Blank	07/20/11	07/20/11	1.00	Diesel	0.10	< 0.10 U
11-15412	HC ID: ---		FID4A	1.0	Motor Oil	0.20	< 0.20 U
					o-Terphenyl		108%
TE69E	DW-08-071911	07/20/11	07/20/11	1.00	Diesel	0.10	< 0.10 U
11-15412	HC ID: ---		FID4A	1.0	Motor Oil	0.20	< 0.20 U
					o-Terphenyl		103%
TE69F	DW-07-071911	07/20/11	07/20/11	1.00	Diesel	0.10	< 0.10 U
11-15413	HC ID: ---		FID4A	1.0	Motor Oil	0.20	< 0.20 U
					o-Terphenyl		101%
TE69G	DW-10-071911	07/20/11	07/20/11	1.00	Diesel	0.10	< 0.10 U
11-15414	HC ID: ---		FID4A	1.0	Motor Oil	0.20	< 0.20 U
					o-Terphenyl		84.6%

Reported in mg/L (ppm)

EFV-Effective Final Volume in mL.
DL-Dilution of extract prior to analysis.
RL-Reporting limit.

Diesel quantitation on total peaks in the range from C12 to C24.
Motor Oil quantitation on total peaks in the range from C24 to C38.
HC ID: DRO/RRO indicate results of organics or additional hydrocarbons in ranges are not identifiable.

ANALYTICAL RESOURCES INCORPORATED

CLEANED TPHD SURROGATE RECOVERY SUMMARY

Matrix: Water

QC Report No: TE69-The Boeing Company
Project: North Boeing Field
025082.311

Client ID	OTER	TOT OUT
MB-072011	108%	0
LCS-072011	97.2%	0
LCSD-072011	102%	0
DW-08-071911	103%	0
DW-07-071911	101%	0
DW-10-071911	84.6%	0

	LCS/MB LIMITS	QC LIMITS
(OTER) = o-Terphenyl	(50-150)	(50-150)

Prep Method: SW3510C
Log Number Range: 11-15412 to 11-15414

FORM-II TPHD

ANALYTICAL RESOURCES INCORPORATED

ORGANICS ANALYSIS DATA SHEET
NWTPHD by GC/FID-Silica and Acid Cleaned **Sample ID: LCS-072011**
 LCS/LCSD

Lab Sample ID: LCS-072011
LIMS ID: 11-15412
Matrix: Water
Data Release Authorized:
Reported: 07/21/11

QC Report No: TE69-The Boeing Company
Project: North Boeing Field
025082.311
Date Sampled: 07/19/11
Date Received: 07/19/11

Date Extracted LCS/LCSD: 07/20/11

Date Analyzed LCS: 07/20/11 17:46
LCSD: 07/20/11 18:10
Instrument/Analyst LCS: FID/MS
LCSD: FID/MS

Sample Amount LCS: 500 mL
LCSD: 500 mL
Final Extract Volume LCS: 1.0 mL
LCSD: 1.0 mL
Dilution Factor LCS: 1.00
LCSD: 1.00

Range	LCS	Spike Added-LCS	LCS Recovery	LCSD	Spike Added-LCSD	LCSD Recovery	RPD
Diesel	2.48	3.00	82.7%	2.47	3.00	82.3%	0.4%

TPHD Surrogate Recovery

	LCS	LCSD
o-Terphenyl	97.2%	102%

Results reported in mg/L
RPD calculated using sample concentrations per SW846.

ANALYTICAL RESOURCES INCORPORATED

TOTAL DIESEL RANGE HYDROCARBONS-EXTRACTION REPORT

ARI Job: TE69
Project: North Boeing Field 025082.311

Matrix: Water
Date Received: 07/19/11

ARI ID	Client ID	Samp Amt	Final Vol	Prep Date
11-15412-072011MB1	Method Blank	500 mL	1.00 mL	07/20/11
11-15412-072011LCS1	Lab Control	500 mL	1.00 mL	07/20/11
11-15412-072011LCSD1	Lab Control Dup	500 mL	1.00 mL	07/20/11
11-15412-TE69E	DW-08-071911	500 mL	1.00 mL	07/20/11
11-15413-TE69F	DW-07-071911	500 mL	1.00 mL	07/20/11
11-15414-TE69G	DW-10-071911	500 mL	1.00 mL	07/20/11

ANALYTICAL RESOURCES INCORPORATED

ORGANICS ANALYSIS DATA SHEET
TPHG by Method NWTPHG
Matrix: Water

Data Release Authorized:
Reported: 07/21/11

QC Report No: TE69-The Boeing Company
Project: North Boeing Field
Event: 025082.311
Date Sampled: 07/19/11
Date Received: 07/19/11

ARI ID	Client ID	Analysis Date	DL	Range	Result
TE69E	DW-08-071911	07/20/11	1.0	Gasoline	< 0.25 U
11-15412		PID1		HC ID	---
				Trifluorotoluene	106%
				Bromobenzene	101%
TE69F	DW-07-071911	07/20/11	1.0	Gasoline	< 0.25 U
11-15413		PID1		HC ID	---
				Trifluorotoluene	104%
				Bromobenzene	101%
TE69G	DW-10-071911	07/20/11	1.0	Gasoline	< 0.25 U
11-15414		PID1		HC ID	---
				Trifluorotoluene	107%
				Bromobenzene	102%
MB-072011	Method Blank	07/20/11	1.0	Gasoline	< 0.25 U
11-15415		PID1		HC ID	---
				Trifluorotoluene	105%
				Bromobenzene	101%
TE69H	Trip Blanks	07/20/11	1.0	Gasoline	< 0.25 U
11-15415		PID1		HC ID	---
				Trifluorotoluene	110%
				Bromobenzene	104%

Gasoline values reported in mg/L (ppm)

Quantitation on total peaks in the gasoline range from Toluene to Naphthalene.

GAS: Indicates the presence of gasoline or weathered gasoline.
GRO: Positive result that does not match an identifiable gasoline pattern.

ANALYTICAL RESOURCES INCORPORATED

ORGANICS ANALYSIS DATA SHEET
TPHG by Method NWTPHG

Sample ID: LCS-072011
LAB CONTROL SAMPLE

Lab Sample ID: LCS-072011
LIMS ID: 11-15415
Matrix: Water
Data Release Authorized: VD
Reported: 07/21/11

QC Report No: TE69-The Boeing Company
Project: North Boeing Field
Event: 025082.311
Date Sampled: NA
Date Received: NA

Date Analyzed LCS: 07/20/11 10:24
LCSD: 07/20/11 10:53
Instrument/Analyst LCS: PID1/MS
LCSD: PID1/MS

Purge Volume: 5.0 mL

Dilution Factor LCS: 1.0
LCSD: 1.0

Analyte	LCS	Spike Added-LCS	LCS Recovery	LCSD	Spike Added-LCSD	LCSD Recovery	RPD
Gasoline Range Hydrocarbons	1.14	1.00	114%	1.04	1.00	104%	9.2%

Reported in mg/L (ppm)

RPD calculated using sample concentrations per SW846.

TPHG Surrogate Recovery

	LCS	LCSD
Trifluorotoluene	110%	105%
Bromobenzene	102%	97.7%

ANALYTICAL RESOURCES INCORPORATED

TPHG WATER SURROGATE RECOVERY SUMMARY

ARI Job: TE69
Matrix: Water

QC Report No: TE69-The Boeing Company
Project: North Boeing Field
Event: 025082.311

Client ID	TFT	BBZ	TOT OUT
DW-08-071911	106%	101%	0
DW-07-071911	104%	101%	0
DW-10-071911	107%	102%	0
MB-072011	105%	101%	0
LCS-072011	110%	102%	0
LCSD-072011	105%	97.7%	0
Trip Blanks	110%	104%	0

	LCS/MB LIMITS	QC LIMITS
(TFT) = Trifluorotoluene	(80-120)	(80-120)
(BBZ) = Bromobenzene	(80-120)	(80-120)

Log Number Range: 11-15412 to 11-15415

FORM II TPHG

ANALYTICAL RESOURCES INCORPORATED

INORGANICS ANALYSIS DATA SHEET
DISSOLVED METALS

Sample ID: DW-03-071911
SAMPLE

Lab Sample ID: TE69A
LIMS ID: 11-15408
Matrix: Water
Data Release Authorized:
Reported: 07/22/11

QC Report No: TE69-The Boeing Company
Project: North Boeing Field
025082.311
Date Sampled: 07/19/11
Date Received: 07/19/11

Prep Meth	Prep Date	Analysis Method	Analysis Date	CAS Number	Analyte	RL	µg/L	Q
200.8	07/20/11	200.8	07/21/11	**7440-38-2**	**Arsenic**	0.5	**1.2**	
200.8	07/20/11	200.8	07/21/11	7440-43-9	Cadmium	0.2	0.2	U
200.8	07/20/11	200.8	07/21/11	7440-47-3	Chromium	1	1	U
200.8	07/20/11	200.8	07/21/11	7440-50-8	Copper	1	1	U
200.8	07/20/11	200.8	07/21/11	7439-92-1	Lead	0.2	0.2	U
7470A	07/20/11	7470A	07/21/11	7439-97-6	Mercury	0.1	0.1	U
200.8	07/20/11	200.8	07/21/11	**7440-02-0**	**Nickel**	1	**3**	
200.8	07/20/11	200.8	07/21/11	7440-66-6	Zinc	10	10	U

U-Analyte undetected at given RL
RL-Reporting Limit

ANALYTICAL RESOURCES INCORPORATED

INORGANICS ANALYSIS DATA SHEET
DISSOLVED METALS

Sample ID: DW-04-071911
SAMPLE

Lab Sample ID: TE69B
LIMS ID: 11-15409
Matrix: Water
Data Release Authorized:
Reported: 07/22/11

QC Report No: TE69-The Boeing Company
Project: North Boeing Field
025082.311
Date Sampled: 07/19/11
Date Received: 07/19/11

Prep Meth	Prep Date	Analysis Method	Analysis Date	CAS Number	Analyte	RL	µg/L	Q
200.8	07/20/11	200.8	07/21/11	**7440-38-2**	**Arsenic**	0.5	**1.8**	
200.8	07/20/11	200.8	07/21/11	7440-43-9	Cadmium	0.2	0.2	U
200.8	07/20/11	200.8	07/21/11	7440-47-3	Chromium	2	2	U
200.8	07/20/11	200.8	07/21/11	**7440-50-8**	**Copper**	1	**1**	
200.8	07/20/11	200.8	07/21/11	7439-92-1	Lead	0.2	0.2	U
7470A	07/20/11	7470A	07/21/11	7439-97-6	Mercury	0.1	0.1	U
200.8	07/20/11	200.8	07/21/11	**7440-02-0**	**Nickel**	1	**3**	
200.8	07/20/11	200.8	07/21/11	7440-66-6	Zinc	10	10	U

U-Analyte undetected at given RL
RL-Reporting Limit

ANALYTICAL RESOURCES INCORPORATED

INORGANICS ANALYSIS DATA SHEET
DISSOLVED METALS

Sample ID: NBF-DTS-PRETREAT-071911
SAMPLE

Lab Sample ID: TE69C
LIMS ID: 11-15410
Matrix: Water
Data Release Authorized:
Reported: 07/22/11

QC Report No: TE69-The Boeing Company
Project: North Boeing Field
025082.311
Date Sampled: 07/19/11
Date Received: 07/19/11

Prep Meth	Prep Date	Analysis Method	Analysis Date	CAS Number	Analyte	RL	µg/L	Q
200.8	07/20/11	200.8	07/21/11	**7440-38-2**	**Arsenic**	0.5	**2.0**	
200.8	07/20/11	200.8	07/21/11	7440-43-9	Cadmium	0.2	0.2	U
200.8	07/20/11	200.8	07/21/11	7440-47-3	Chromium	2	2	U
200.8	07/20/11	200.8	07/21/11	7440-50-8	Copper	1	1	U
200.8	07/20/11	200.8	07/21/11	7439-92-1	Lead	0.2	0.2	U
7470A	07/20/11	7470A	07/21/11	7439-97-6	Mercury	0.1	0.1	U
200.8	07/20/11	200.8	07/21/11	**7440-02-0**	**Nickel**	1	**3**	
200.8	07/20/11	200.8	07/21/11	7440-66-6	Zinc	10	10	U

U-Analyte undetected at given RL
RL-Reporting Limit

ANALYTICAL RESOURCES INCORPORATED

INORGANICS ANALYSIS DATA SHEET
DISSOLVED METALS

Sample ID: NBF-DTS-PREGAC-071911
SAMPLE

Lab Sample ID: TE69D
LIMS ID: 11-15411
Matrix: Water
Data Release Authorized:
Reported: 07/22/11

QC Report No: TE69-The Boeing Company
Project: North Boeing Field
025082.311
Date Sampled: 07/19/11
Date Received: 07/19/11

Prep Meth	Prep Date	Analysis Method	Analysis Date	CAS Number	Analyte	RL	µg/L	Q
200.8	07/20/11	200.8	07/21/11	**7440-38-2**	**Arsenic**	0.5	**1.0**	
200.8	07/20/11	200.8	07/21/11	7440-43-9	Cadmium	0.2	0.2	U
200.8	07/20/11	200.8	07/21/11	7440-47-3	Chromium	1	1	U
200.8	07/20/11	200.8	07/21/11	7440-50-8	Copper	1	1	U
200.8	07/20/11	200.8	07/21/11	7439-92-1	Lead	0.2	0.2	U
7470A	07/20/11	7470A	07/21/11	7439-97-6	Mercury	0.1	0.1	U
200.8	07/20/11	200.8	07/21/11	**7440-02-0**	**Nickel**	1	**10**	
200.8	07/20/11	200.8	07/21/11	7440-66-6	Zinc	10	10	U

U-Analyte undetected at given RL
RL-Reporting Limit

ANALYTICAL RESOURCES INCORPORATED

INORGANICS ANALYSIS DATA SHEET
DISSOLVED METALS

Sample ID: DW-08-071911
SAMPLE

Lab Sample ID: TE69E
LIMS ID: 11-15412
Matrix: Water
Data Release Authorized:
Reported: 07/22/11

QC Report No: TE69-The Boeing Company
Project: North Boeing Field
025082.311
Date Sampled: 07/19/11
Date Received: 07/19/11

Prep Meth	Prep Date	Analysis Method	Analysis Date	CAS Number	Analyte	RL	µg/L	Q
200.8	07/20/11	200.8	07/21/11	**7440-38-2**	**Arsenic**	0.5	**0.8**	
200.8	07/20/11	200.8	07/21/11	7440-43-9	Cadmium	0.2	0.2	U
200.8	07/20/11	200.8	07/21/11	7440-47-3	Chromium	1	1	U
200.8	07/20/11	200.8	07/21/11	**7440-50-8**	**Copper**	1	**4**	
200.8	07/20/11	200.8	07/21/11	7439-92-1	Lead	0.2	0.2	U
7470A	07/20/11	7470A	07/21/11	7439-97-6	Mercury	0.1	0.1	U
200.8	07/20/11	200.8	07/21/11	**7440-02-0**	**Nickel**	1	**3**	
200.8	07/20/11	200.8	07/21/11	7440-66-6	Zinc	10	10	U

U-Analyte undetected at given RL
RL-Reporting Limit

ANALYTICAL RESOURCES INCORPORATED

INORGANICS ANALYSIS DATA SHEET
DISSOLVED METALS

Sample ID: DW-07-071911
SAMPLE

Lab Sample ID: TE69F
LIMS ID: 11-15413
Matrix: Water
Data Release Authorized:
Reported: 07/22/11

QC Report No: TE69-The Boeing Company
Project: North Boeing Field
025082.311
Date Sampled: 07/19/11
Date Received: 07/19/11

Prep Meth	Prep Date	Analysis Method	Analysis Date	CAS Number	Analyte	RL	µg/L	Q
200.8	07/20/11	200.8	07/21/11	**7440-38-2**	**Arsenic**	0.5	**1.4**	
200.8	07/20/11	200.8	07/21/11	7440-43-9	Cadmium	0.2	0.2	U
200.8	07/20/11	200.8	07/21/11	7440-47-3	Chromium	1	1	U
200.8	07/20/11	200.8	07/21/11	7440-50-8	Copper	1	1	U
200.8	07/20/11	200.8	07/21/11	**7439-92-1**	**Lead**	0.2	**0.4**	
7470A	07/20/11	7470A	07/21/11	7439-97-6	Mercury	0.1	0.1	U
200.8	07/20/11	200.8	07/21/11	**7440-02-0**	**Nickel**	1	**2**	
200.8	07/20/11	200.8	07/21/11	**7440-66-6**	**Zinc**	10	**10**	

U-Analyte undetected at given RL
RL-Reporting Limit

ANALYTICAL RESOURCES INCORPORATED

INORGANICS ANALYSIS DATA SHEET
DISSOLVED METALS

Sample ID: DW-10-071911
SAMPLE

Lab Sample ID: TE69G
LIMS ID: 11-15414
Matrix: Water
Data Release Authorized:
Reported: 07/22/11

QC Report No: TE69-The Boeing Company
Project: North Boeing Field
025082.311
Date Sampled: 07/19/11
Date Received: 07/19/11

Prep Meth	Prep Date	Analysis Method	Analysis Date	CAS Number	Analyte	RL	µg/L	Q
200.8	07/20/11	200.8	07/21/11	**7440-38-2**	**Arsenic**	0.5	**1.9**	
200.8	07/20/11	200.8	07/21/11	7440-43-9	Cadmium	0.2	0.2	U
200.8	07/20/11	200.8	07/21/11	7440-47-3	Chromium	1	1	U
200.8	07/20/11	200.8	07/21/11	**7440-50-8**	**Copper**	1	**5**	
200.8	07/20/11	200.8	07/21/11	**7439-92-1**	**Lead**	0.2	**0.3**	
7470A	07/20/11	7470A	07/21/11	7439-97-6	Mercury	0.1	0.1	U
200.8	07/20/11	200.8	07/21/11	**7440-02-0**	**Nickel**	1	**2**	
200.8	07/20/11	200.8	07/21/11	**7440-66-6**	**Zinc**	10	**20**	

U-Analyte undetected at given RL
RL-Reporting Limit

ANALYTICAL RESOURCES INCORPORATED

INORGANICS ANALYSIS DATA SHEET
DISSOLVED METALS

Sample ID: METHOD BLANK

Lab Sample ID: TE69MB
LIMS ID: 11-15408
Matrix: Water
Data Release Authorized:
Reported: 07/22/11

QC Report No: TE69-The Boeing Company
Project: North Boeing Field
025082.311
Date Sampled: NA
Date Received: NA

Prep Meth	Prep Date	Analysis Method	Analysis Date	CAS Number	Analyte	RL	µg/L	Q
200.8	07/20/11	200.8	07/21/11	7440-38-2	Arsenic	0.2	0.2	U
200.8	07/20/11	200.8	07/21/11	7440-43-9	Cadmium	0.1	0.1	U
200.8	07/20/11	200.8	07/21/11	7440-47-3	Chromium	0.5	0.5	U
200.8	07/20/11	200.8	07/21/11	7440-50-8	Copper	0.5	0.5	U
200.8	07/20/11	200.8	07/21/11	7439-92-1	Lead	0.1	0.1	U
7470A	07/20/11	7470A	07/21/11	7439-97-6	Mercury	0.1	0.1	U
200.8	07/20/11	200.8	07/21/11	7440-02-0	Nickel	0.5	0.5	U
200.8	07/20/11	200.8	07/21/11	7440-66-6	Zinc	4	4	U

U-Analyte undetected at given RL
RL-Reporting Limit

ANALYTICAL RESOURCES INCORPORATED

INORGANICS ANALYSIS DATA SHEET
DISSOLVED METALS

Sample ID: LAB CONTROL

Lab Sample ID: TE69LCS
LIMS ID: 11-15408
Matrix: Water
Data Release Authorized:
Reported: 07/22/11

QC Report No: TE69-The Boeing Company
Project: North Boeing Field
025082.311
Date Sampled: NA
Date Received: NA

BLANK SPIKE QUALITY CONTROL REPORT

Analyte	Analysis Method	Spike Found	Spike Added	% Recovery	Q
Arsenic	200.8	27.1	25.0	108%	
Cadmium	200.8	27.0	25.0	108%	
Chromium	200.8	27.2	25.0	109%	
Copper	200.8	29.1	25.0	116%	
Lead	200.8	28.0	25.0	112%	
Mercury	7470A	2.3	2.0	115%	
Nickel	200.8	28.0	25.0	112%	
Zinc	200.8	88	80	110%	

Reported in µg/L

N-Control limit not met
Control Limits: 80-120%

Analytical Resources, Incorporated
Analytical Chemists and Consultants

July 22, 2011

Kris Hendrickson
Landau Associates, Inc.
130 Second Ave
Edmonds, WA 98020

RE: Project: NBF – Dewatering Wells 025082.311
ARI Job: TE80

Dear Kris:

Please find enclosed the Chain of Custody (COC) record, sample receipt documentation, and analytical results for the above referenced project. Analytical Resources, Inc. (ARI) accepted three water samples and a trip blank in good condition on July 20, 2011. One cooler was received with a temperature of 9.8°C.

The samples were analyzed for PCBs, VOCs, NWTPH-Gx, NWTPH-Dx and Dissolved Metals, as requested on the COC.

The VOCs method blank contained Naphthalene and 1,2,3-Trichlorobenzene. All associated samples that contain analyte have been flagged with a "B" qualifier.

The VOCs CCAL is out of control low for all associated FORM III "Q" flagged analytes. All associated samples that contain analyte have been flagged with a "Q" qualifier.

The VOCs LCS and/or LCSD are out of control low for several analytes.

There were no other irregularities with the samples.

Quality control analysis results are included for your review. Copies of the reports and all associated raw data will be kept on file electronically at ARI. If you have any questions or require additional information, please contact me at your convenience.

Sincerely,
ANALYTICAL RESOURCES, INC

Kelly Bottem
Client Services Manager
(206) 695-6211
kellyb@arilabs.com
www.arilabs.com

cc: Carl Bach, The Boeing Company, P.O. Box 3707, M/S 1W-12, Seattle, WA 98124-2207

4611 South 134th Place, Suite 100 • Tukwila WA 98168 • **206-695-6200** • **206-695-6201** fax

☒ Seattle/Edmonds (425) 778-0907
☐ Tacoma (253) 926-2493
☐ Spokane (509) 327-9737
☐ Portland (503) 542-1080
☐

LANDAU ASSOCIATES

TE 80

Date 7/20/11
Page 1 of 1

Chain-of-Custody Record

Project Name NORTH BWENG FIELD Project No. 025082.311
Project Location/Event SEATTLE, WA / DEWATERING WELL SAMPLES
Sampler's Name DYLAN FRAZER
Project Contact CARL DAHL / KRIS HENDRICKSON
Send Results To CARL DAHL / KRIS HENDRICKSON / ANNE HANSEN

Turnaround Time
☐ Standard
☐ Accelerated
☒ 24 HR

Testing Parameters

Sample I.D.	Date	Time	Matrix	No. of Containers	Dissolved Metals *	VOCs	PCBs (low level)	TPH-Dx	TPH-Gx
DW-09-072011	7/20/11	0930	H_2O	10	X	X	X	X	X
DW-11-072011	7/20/11	1040	H_2O	10	X	X	X	X	X
DW-12-072011	7/20/11	1240	H_2O	10	X	X	X	X	X
TRIP BLANKS	7/19/11	n/a	H_2O	2		X			X

Observations/Comments

~~* Allow water samples to settle, collect aliquot from clear portion~~ (DF)

X NWTPH-Dx - run acid wash/silica gel cleanup

___ run samples standardized to _____ product

___ Analyze for EPH if no specific product identified

VOC/BTEX/VPH (soil):
___ non-preserved
___ preserved w/methanol
___ preserved w/sodium bisulfate
___ Freeze upon receipt

X Dissolved metal water samples field filtered

Other * FIELD FILTERED; ARSENIC, CADMIUM, CHROMIUM, COPPER, LEAD, MERCURY, NICKEL, ZINC

Special Shipment/Handling or Storage Requirements ON ICE

Method of Shipment DROP OFF

Relinquished by	Received by	Relinquished by	Received by
Signature: Dan	Signature: Taylor Streeter	Signature:	Signature:
Printed Name: DYLAN FRAZER	Printed Name:	Printed Name:	Printed Name:
Company: LANDAU	Company: ARI	Company:	Company:
Date: 7/20/11 Time: 1325	Date: 7-20-11 Time: 1325	Date: Time:	Date: Time:

WHITE COPY - Project File YELLOW COPY - Laboratory PINK COPY - Client Representative

Rev 8/09

Analytical Resources, Incorporated
Analytical Chemists and Consultants

Cooler Receipt Form

ARI Client: Boeing

COC No(s): _____ NA

Assigned ARI Job No: TE80

Project Name: NBF

Delivered by: Fed-Ex UPS Courier Hand Delivered Other: _____

Tracking No: _____ NA

Preliminary Examination Phase:

Were intact, properly signed and dated custody seals attached to the outside of to cooler? YES NO

Were custody papers included with the cooler? YES NO

Were custody papers properly filled out (ink, signed, etc.) YES NO

Temperature of Cooler(s) (°C) (recommended 2.0-6.0 °C for chemistry) 9.8

If cooler temperature is out of compliance fill out form 00070F

Temp Gun ID#: 90941619

Cooler Accepted by: TS Date: 7-20-11 Time: 1325

Complete custody forms and attach all shipping documents

Log-In Phase:

Was a temperature blank included in the cooler? YES NO

What kind of packing material was used? Bubble Wrap Wet Ice Gel Packs Baggies Foam Block Paper Other: _____

Was sufficient ice used (if appropriate)? NA YES NO

Were all bottles sealed in individual plastic bags? YES NO

Did all bottles arrive in good condition (unbroken)? YES NO

Were all bottle labels complete and legible? YES NO

Did the number of containers listed on COC match with the number of containers received? YES NO

Did all bottle labels and tags agree with custody papers? YES NO

Were all bottles used correct for the requested analyses? YES NO

Do any of the analyses (bottles) require preservation? (attach preservation sheet, excluding VOCs).. YES NO

Were all VOC vials free of air bubbles? NA YES NO

Was sufficient amount of sample sent in each bottle? NA YES NO

Date VOC Trip Blank was made at ARI YES NO

Was Sample Split by ARI NA YES Date/Time: _____ Equipment: _____ Split by: _____

Samples Logged by: TS Date: 7-20-11 Time: 1350

***** Notify Project Manager of discrepancies or concerns *****

Sample ID on Bottle	Sample ID on COC	Sample ID on Bottle	Sample ID on COC

Additional Notes, Discrepancies, & Resolutions:

By: Date:

Small Air Bubbles <2mm	Peabubbles 2-4 mm	LARGE Air Bubbles > 4 mm	
			Small → "sm"
			Peabubbles → "pb"
			Large → "lg"
			Headspace → "hs"

PRESERVATION VERIFICATION 07/20/11

ANALYTICAL RESOURCES INCORPORATED

ARI Job No: **TE80**

PC: Kelly
VTSR: 07/20/11

Inquiry Number: NONE
Analysis Requested: 07/20/11
Contact: Bach,Carl
Client: The Boeing Company
Logged by: TS
Sample Set Used: Yes-481
Validatable Package: No
Deliverables:

Project #: 025082.311
Project: NBF
Sample Site:
SDG No:
Analytical Protocol: In-house

LOGNUM ARI ID	CLIENT ID	CN >12	WAD >12	NH3 <2	COD <2	FOG <2	MET <2	PHEN <2	PHOS <2	TKN <2	NO23 <2	TOC <2	S2 >9	AK102 <2	Fe2+ <2	DMET FLT	DOC FLT	PARAMETER	ADJUSTED TO	LOT NUMBER	AMOUNT ADDED	DATE/BY
11-15472 **TE80A**	DW-09-072011						DIS Pass									Y						
11-15473 **TE80B**	DW-11-072011						DIS Pass									Y						
11-15474 **TE80C**	DW-12-072011						DIS Pass									Y						

Checked By KS Date 7-20-11

Sample ID Cross Reference Report

ANALYTICAL RESOURCES INCORPORATED

ARI Job No: TE80
Client: The Boeing Company
Project Event: 025082.311
Project Name: NBF

	Sample ID	ARI Lab ID	ARI LIMS ID	Matrix	Sample Date/Time	VTSR
1.	DW-09-072011	TE80A	11-15472	Water	07/20/11 09:30	07/20/11 13:25
2.	DW-11-072011	TE80B	11-15473	Water	07/20/11 10:40	07/20/11 13:25
3.	DW-12-072011	TE80C	11-15474	Water	07/20/11 12:40	07/20/11 13:25
4.	Trip Blanks	TE80D	11-15475	Water	07/19/11	07/20/11 13:25

Printed 07/20/11

Analytical Resources, Incorporated
Analytical Chemists and Consultants

Cooler Temperature Compliance Form

Cooler#: TC80 Temperature(°C): 9.8

Sample ID	Bottle Count	Bottle Type

All Samples out of temp compliance Not sampled on 7/22/11

Cooler#: Temperature(°C):

Sample ID	Bottle Count	Bottle Type

Cooler#: Temperature(°C):

Sample ID	Bottle Count	Bottle Type

Cooler#: Temperature(°C):

Sample ID	Bottle Count	Bottle Type

Completed by: [signature] Date: 7/22/11 Time: 9:33

ANALYTICAL RESOURCES INCORPORATED

ORGANICS ANALYSIS DATA SHEET
Volatiles by Purge & Trap GC/MS-Method SW8260C **Sample ID: DW-09-072011**
 SAMPLE

Lab Sample ID: TE80A
LIMS ID: 11-15472
Matrix: Water
Data Release Authorized:
Reported: 07/21/11

QC Report No: TE80-The Boeing Company
Project: NBF
025082.311
Date Sampled: 07/20/11
Date Received: 07/20/11

Instrument/Analyst: NT3/PKC
Date Analyzed: 07/21/11 13:57

Sample Amount: 10.0 mL
Purge Volume: 10.0 mL

CAS Number	Analyte	RL	Result	Q
74-87-3	Chloromethane	0.5	< 0.5	U
74-83-9	Bromomethane	1.0	< 1.0	U
75-01-4	**Vinyl Chloride**	**0.2**	**1.8**	
75-00-3	Chloroethane	0.2	< 0.2	U
75-09-2	Methylene Chloride	0.5	< 0.5	U
67-64-1	Acetone	5.0	< 5.0	U
75-15-0	Carbon Disulfide	0.2	< 0.2	U
75-35-4	1,1-Dichloroethene	0.2	< 0.2	U
75-34-3	1,1-Dichloroethane	0.2	< 0.2	U
156-60-5	trans-1,2-Dichloroethene	0.2	< 0.2	U
156-59-2	cis-1,2-Dichloroethene	0.2	< 0.2	U
67-66-3	Chloroform	0.2	< 0.2	U
107-06-2	1,2-Dichloroethane	0.2	< 0.2	U
78-93-3	2-Butanone	5.0	< 5.0	U
71-55-6	1,1,1-Trichloroethane	0.2	< 0.2	U
56-23-5	Carbon Tetrachloride	0.2	< 0.2	U
108-05-4	Vinyl Acetate	1.0	< 1.0	U
75-27-4	Bromodichloromethane	0.2	< 0.2	U
78-87-5	1,2-Dichloropropane	0.2	< 0.2	U
10061-01-5	cis-1,3-Dichloropropene	0.2	< 0.2	U
79-01-6	Trichloroethene	0.2	< 0.2	U
124-48-1	Dibromochloromethane	0.2	< 0.2	U
79-00-5	1,1,2-Trichloroethane	0.2	< 0.2	U
71-43-2	Benzene	0.2	< 0.2	U
10061-02-6	trans-1,3-Dichloropropene	0.2	< 0.2	U
110-75-8	2-Chloroethylvinylether	1.0	< 1.0	U
75-25-2	Bromoform	0.2	< 0.2	U
108-10-1	4-Methyl-2-Pentanone (MIBK)	5.0	< 5.0	U
591-78-6	2-Hexanone	5.0	< 5.0	U
127-18-4	Tetrachloroethene	0.2	< 0.2	U
79-34-5	1,1,2,2-Tetrachloroethane	0.2	< 0.2	U
108-88-3	Toluene	0.2	< 0.2	U
108-90-7	Chlorobenzene	0.2	< 0.2	U
100-41-4	Ethylbenzene	0.2	< 0.2	U
100-42-5	Styrene	0.2	< 0.2	U
75-69-4	Trichlorofluoromethane	0.2	< 0.2	U

ANALYTICAL RESOURCES INCORPORATED

ORGANICS ANALYSIS DATA SHEET
Volatiles by Purge & Trap GC/MS-Method SW8260C **Sample ID: DW-09-072011**
 SAMPLE

Lab Sample ID: TE80A
LIMS ID: 11-15472
Matrix: Water
Date Analyzed: 07/21/11 13:57

QC Report No: TE80-The Boeing Company
Project: NBF
025082.311

CAS Number	Analyte	RL	Result	Q
76-13-1	1,1,2-Trichloro-1,2,2-trifluoroe	0.2	< 0.2	U
179601-23-1	m,p-Xylene	0.4	< 0.4	U
95-47-6	o-Xylene	0.2	< 0.2	U
95-50-1	1,2-Dichlorobenzene	0.2	< 0.2	U
541-73-1	1,3-Dichlorobenzene	0.2	< 0.2	U
106-46-7	1,4-Dichlorobenzene	0.2	< 0.2	U
107-02-8	Acrolein	5.0	< 5.0	U
74-88-4	Methyl Iodide	1.0	< 1.0	U
74-96-4	Bromoethane	0.2	< 0.2	U
107-13-1	Acrylonitrile	1.0	< 1.0	U
563-58-6	1,1-Dichloropropene	0.2	< 0.2	U
74-95-3	Dibromomethane	0.2	< 0.2	U
630-20-6	1,1,1,2-Tetrachloroethane	0.2	< 0.2	U
96-12-8	1,2-Dibromo-3-chloropropane	0.5	< 0.5	U
96-18-4	1,2,3-Trichloropropane	0.5	< 0.5	U
110-57-6	trans-1,4-Dichloro-2-butene	1.0	< 1.0	U
108-67-8	1,3,5-Trimethylbenzene	0.2	< 0.2	U
95-63-6	1,2,4-Trimethylbenzene	0.2	< 0.2	U
87-68-3	Hexachlorobutadiene	0.5	< 0.5	U
106-93-4	Ethylene Dibromide	0.2	< 0.2	U
74-97-5	Bromochloromethane	0.2	< 0.2	U
594-20-7	2,2-Dichloropropane	0.2	< 0.2	U
142-28-9	1,3-Dichloropropane	0.2	< 0.2	U
98-82-8	Isopropylbenzene	0.2	< 0.2	U
103-65-1	n-Propylbenzene	0.2	< 0.2	U
108-86-1	Bromobenzene	0.2	< 0.2	U
95-49-8	2-Chlorotoluene	0.2	< 0.2	U
106-43-4	4-Chlorotoluene	0.2	< 0.2	U
98-06-6	tert-Butylbenzene	0.2	< 0.2	U
135-98-8	sec-Butylbenzene	0.2	< 0.2	U
99-87-6	4-Isopropyltoluene	0.2	< 0.2	U
104-51-8	n-Butylbenzene	0.2	< 0.2	U
120-82-1	1,2,4-Trichlorobenzene	0.5	< 0.5	U
91-20-3	Naphthalene	0.5	< 0.5	U
87-61-6	1,2,3-Trichlorobenzene	0.5	< 0.5	U

Reported in µg/L (ppb)

Volatile Surrogate Recovery

d4-1,2-Dichloroethane	83.6%
d8-Toluene	99.1%
Bromofluorobenzene	94.9%
d4-1,2-Dichlorobenzene	99.2%

2-Chloroethylvinylether is an acid labile compound and may not be recovered from an acid preserved sample.

ANALYTICAL RESOURCES INCORPORATED

ORGANICS ANALYSIS DATA SHEET
Volatiles by Purge & Trap GC/MS-Method SW8260C **Sample ID: DW-11-072011**
 SAMPLE

Lab Sample ID: TE80B
LIMS ID: 11-15473
Matrix: Water
Data Release Authorized: VJ
Reported: 07/21/11

QC Report No: TE80-The Boeing Company
Project: NBF
025082.311
Date Sampled: 07/20/11
Date Received: 07/20/11

Instrument/Analyst: NT3/PKC
Date Analyzed: 07/21/11 14:24

Sample Amount: 10.0 mL
Purge Volume: 10.0 mL

CAS Number	Analyte	RL	Result	Q
74-87-3	Chloromethane	0.5	< 0.5	U
74-83-9	Bromomethane	1.0	< 1.0	U
75-01-4	**Vinyl Chloride**	**0.2**	**1.1**	
75-00-3	Chloroethane	0.2	< 0.2	U
75-09-2	Methylene Chloride	0.5	< 0.5	U
67-64-1	Acetone	5.0	< 5.0	U
75-15-0	Carbon Disulfide	0.2	< 0.2	U
75-35-4	1,1-Dichloroethene	0.2	< 0.2	U
75-34-3	1,1-Dichloroethane	0.2	< 0.2	U
156-60-5	**trans-1,2-Dichloroethene**	**0.2**	**0.2**	
156-59-2	**cis-1,2-Dichloroethene**	**0.2**	**1.8**	
67-66-3	**Chloroform**	**0.2**	**4.7**	
107-06-2	1,2-Dichloroethane	0.2	< 0.2	U
78-93-3	2-Butanone	5.0	< 5.0	U
71-55-6	1,1,1-Trichloroethane	0.2	< 0.2	U
56-23-5	Carbon Tetrachloride	0.2	< 0.2	U
108-05-4	Vinyl Acetate	1.0	< 1.0	U
75-27-4	Bromodichloromethane	0.2	< 0.2	U
78-87-5	**1,2-Dichloropropane**	**0.2**	**0.3**	
10061-01-5	cis-1,3-Dichloropropene	0.2	< 0.2	U
79-01-6	Trichloroethene	0.2	< 0.2	U
124-48-1	Dibromochloromethane	0.2	< 0.2	U
79-00-5	1,1,2-Trichloroethane	0.2	< 0.2	U
71-43-2	Benzene	0.2	< 0.2	U
10061-02-6	trans-1,3-Dichloropropene	0.2	< 0.2	U
110-75-8	2-Chloroethylvinylether	1.0	< 1.0	U
75-25-2	Bromoform	0.2	< 0.2	U
108-10-1	4-Methyl-2-Pentanone (MIBK)	5.0	< 5.0	U
591-78-6	2-Hexanone	5.0	< 5.0	U
127-18-4	Tetrachloroethene	0.2	< 0.2	U
79-34-5	1,1,2,2-Tetrachloroethane	0.2	< 0.2	U
108-88-3	Toluene	0.2	< 0.2	U
108-90-7	Chlorobenzene	0.2	< 0.2	U
100-41-4	Ethylbenzene	0.2	< 0.2	U
100-42-5	Styrene	0.2	< 0.2	U
75-69-4	Trichlorofluoromethane	0.2	< 0.2	U

ANALYTICAL RESOURCES INCORPORATED

ORGANICS ANALYSIS DATA SHEET
Volatiles by Purge & Trap GC/MS-Method SW8260C **Sample ID: DW-11-072011**
 SAMPLE

Lab Sample ID: TE80B
LIMS ID: 11-15473
Matrix: Water
Date Analyzed: 07/21/11 14:24

QC Report No: TE80-The Boeing Company
Project: NBF
C25082.311

CAS Number	Analyte	RL	Result	Q
76-13-1	1,1,2-Trichloro-1,2,2-trifluoroe	0.2	< 0.2	U
179601-23-1	m,p-Xylene	0.4	< 0.4	U
95-47-6	o-Xylene	0.2	< 0.2	U
95-50-1	1,2-Dichlorobenzene	0.2	< 0.2	U
541-73-1	1,3-Dichlorobenzene	0.2	< 0.2	U
106-46-7	1,4-Dichlorobenzene	0.2	< 0.2	U
107-02-8	Acrolein	5.0	< 5.0	U
74-88-4	Methyl Iodide	1.0	< 1.0	U
74-96-4	Bromoethane	0.2	< 0.2	U
107-13-1	Acrylonitrile	1.0	< 1.0	U
563-58-6	1,1-Dichloropropene	0.2	< 0.2	U
74-95-3	Dibromomethane	0.2	< 0.2	U
630-20-6	1,1,1,2-Tetrachloroethane	0.2	< 0.2	U
96-12-8	1,2-Dibromo-3-chloropropane	0.5	< 0.5	U
96-18-4	1,2,3-Trichloropropane	0.5	< 0.5	U
110-57-6	trans-1,4-Dichloro-2-butene	1.0	< 1.0	U
108-67-8	1,3,5-Trimethylbenzene	0.2	< 0.2	U
95-63-6	1,2,4-Trimethylbenzene	0.2	< 0.2	U
87-68-3	Hexachlorobutadiene	0.5	< 0.5	U
106-93-4	Ethylene Dibromide	0.2	< 0.2	U
74-97-5	Bromochloromethane	0.2	< 0.2	U
594-20-7	2,2-Dichloropropane	0.2	< 0.2	U
142-28-9	1,3-Dichloropropane	0.2	< 0.2	U
98-82-8	Isopropylbenzene	0.2	< 0.2	U
103-65-1	n-Propylbenzene	0.2	< 0.2	U
108-86-1	Bromobenzene	0.2	< 0.2	U
95-49-8	2-Chlorotoluene	0.2	< 0.2	U
106-43-4	4-Chlorotoluene	0.2	< 0.2	U
98-06-6	tert-Butylbenzene	0.2	< 0.2	U
135-98-8	sec-Butylbenzene	0.2	< 0.2	U
99-87-6	4-Isopropyltoluene	0.2	< 0.2	U
104-51-8	n-Butylbenzene	0.2	< 0.2	U
120-82-1	1,2,4-Trichlorobenzene	0.5	< 0.5	U
91-20-3	Naphthalene	0.5	< 0.5	U
87-61-6	1,2,3-Trichlorobenzene	0.5	< 0.5	U

Reported in µg/L (ppb)

Volatile Surrogate Recovery

d4-1,2-Dichloroethane	85.8%
d8-Toluene	98.5%
Bromofluorobenzene	93.4%
d4-1,2-Dichlorobenzene	96.6%

2-Chloroethylvinylether is an acid labile compound and may not be recovered from an acid preserved sample.

ANALYTICAL RESOURCES INCORPORATED

ORGANICS ANALYSIS DATA SHEET
Volatiles by Purge & Trap GC/MS-Method SW8260C **Sample ID: DW-12-072011**
 SAMPLE

Lab Sample ID: TE80C
LIMS ID: 11-15474
Matrix: Water
Data Release Authorized: VG
Reported: 07/21/11

QC Report No: TE80-The Boeing Company
Project: NBF
025082.311
Date Sampled: 07/20/11
Date Received: 07/20/11

Instrument/Analyst: NT3/PKC
Date Analyzed: 07/21/11 14:51

Sample Amount: 10.0 mL
Purge Volume: 10.0 mL

CAS Number	Analyte	RL	Result	Q
74-87-3	Chloromethane	0.5	< 0.5	U
74-83-9	Bromomethane	1.0	< 1.0	U
75-01-4	Vinyl Chloride	0.2	< 0.2	U
75-00-3	Chloroethane	0.2	< 0.2	U
75-09-2	Methylene Chloride	0.5	< 0.5	U
67-64-1	Acetone	5.0	< 5.0	U
75-15-0	Carbon Disulfide	0.2	< 0.2	U
75-35-4	1,1-Dichloroethene	0.2	< 0.2	U
75-34-3	1,1-Dichloroethane	0.2	< 0.2	U
156-60-5	trans-1,2-Dichloroethene	0.2	< 0.2	U
156-59-2	cis-1,2-Dichloroethene	0.2	< 0.2	U
67-66-3	**Chloroform**	**0.2**	**2.1**	
107-06-2	1,2-Dichloroethane	0.2	< 0.2	U
78-93-3	2-Butanone	5.0	< 5.0	U
71-55-6	1,1,1-Trichloroethane	0.2	< 0.2	U
56-23-5	Carbon Tetrachloride	0.2	< 0.2	U
108-05-4	Vinyl Acetate	1.0	< 1.0	U
75-27-4	Bromodichloromethane	0.2	< 0.2	U
78-87-5	1,2-Dichloropropane	0.2	< 0.2	U
10061-01-5	cis-1,3-Dichloropropene	0.2	< 0.2	U
79-01-6	Trichloroethene	0.2	< 0.2	U
124-48-1	Dibromochloromethane	0.2	< 0.2	U
79-00-5	1,1,2-Trichloroethane	0.2	< 0.2	U
71-43-2	Benzene	0.2	< 0.2	U
10061-02-6	trans-1,3-Dichloropropene	0.2	< 0.2	U
110-75-8	2-Chloroethylvinylether	1.0	< 1.0	U
75-25-2	Bromoform	0.2	< 0.2	U
108-10-1	4-Methyl-2-Pentanone (MIBK)	5.0	< 5.0	U
591-78-6	2-Hexanone	5.0	< 5.0	U
127-18-4	Tetrachloroethene	0.2	< 0.2	U
79-34-5	1,1,2,2-Tetrachloroethane	0.2	< 0.2	U
108-88-3	Toluene	0.2	< 0.2	U
108-90-7	Chlorobenzene	0.2	< 0.2	U
100-41-4	Ethylbenzene	0.2	< 0.2	U
100-42-5	Styrene	0.2	< 0.2	U
75-69-4	Trichlorofluoromethane	0.2	< 0.2	U

ANALYTICAL RESOURCES INCORPORATED

ORGANICS ANALYSIS DATA SHEET
Volatiles by Purge & Trap GC/MS-Method SW8260C **Sample ID: DW-12-072011**
 SAMPLE

Lab Sample ID: TE80C
LIMS ID: 11-15474
Matrix: Water
Date Analyzed: 07/21/11 14:51

QC Report No: TE80-The Boeing Company
Project: NBF
025082.311

CAS Number	Analyte	RL	Result	Q
76-13-1	1,1,2-Trichloro-1,2,2-trifluoroe	0.2	< 0.2	U
179601-23-1	m,p-Xylene	0.4	< 0.4	U
95-47-6	o-Xylene	0.2	< 0.2	U
95-50-1	1,2-Dichlorobenzene	0.2	< 0.2	U
541-73-1	1,3-Dichlorobenzene	0.2	< 0.2	U
106-46-7	1,4-Dichlorobenzene	0.2	< 0.2	U
107-02-8	Acrolein	5.0	< 5.0	U
74-88-4	Methyl Iodide	1.0	< 1.0	U
74-96-4	Bromoethane	0.2	< 0.2	U
107-13-1	Acrylonitrile	1.0	< 1.0	U
563-58-6	1,1-Dichloropropene	0.2	< 0.2	U
74-95-3	Dibromomethane	0.2	< 0.2	U
630-20-6	1,1,1,2-Tetrachloroethane	0.2	< 0.2	U
96-12-8	1,2-Dibromo-3-chloropropane	0.5	< 0.5	U
96-18-4	1,2,3-Trichloropropane	0.5	< 0.5	U
110-57-6	trans-1,4-Dichloro-2-butene	1.0	< 1.0	U
108-67-8	1,3,5-Trimethylbenzene	0.2	< 0.2	U
95-63-6	1,2,4-Trimethylbenzene	0.2	< 0.2	U
87-68-3	Hexachlorobutadiene	0.5	< 0.5	U
106-93-4	Ethylene Dibromide	0.2	< 0.2	U
74-97-5	Bromochloromethane	0.2	< 0.2	U
594-20-7	2,2-Dichloropropane	0.2	< 0.2	U
142-28-9	1,3-Dichloropropane	0.2	< 0.2	U
98-82-8	Isopropylbenzene	0.2	< 0.2	U
103-65-1	n-Propylbenzene	0.2	< 0.2	U
108-86-1	Bromobenzene	0.2	< 0.2	U
95-49-8	2-Chlorotoluene	0.2	< 0.2	U
106-43-4	4-Chlorotoluene	0.2	< 0.2	U
98-06-6	tert-Butylbenzene	0.2	< 0.2	U
135-98-8	sec-Butylbenzene	0.2	< 0.2	U
99-87-6	4-Isopropyltoluene	0.2	< 0.2	U
104-51-8	n-Butylbenzene	0.2	< 0.2	U
120-82-1	1,2,4-Trichlorobenzene	0.5	< 0.5	U
91-20-3	Naphthalene	0.5	< 0.5	U
87-61-6	1,2,3-Trichlorobenzene	0.5	< 0.5	U

Reported in µg/L (ppb)

Volatile Surrogate Recovery

d4-1,2-Dichloroethane	86.2%
d8-Toluene	98.6%
Bromofluorobenzene	94.5%
d4-1,2-Dichlorobenzene	97.1%

2-Chloroethylvinylether is an acid labile compound and may not be recovered from an acid preserved sample.

ANALYTICAL RESOURCES INCORPORATED

ORGANICS ANALYSIS DATA SHEET
Volatiles by Purge & Trap GC/MS-Method SW8260C **Sample ID: Trip Blanks**
 SAMPLE

Lab Sample ID: TE80D
LIMS ID: 11-15475
Matrix: Water
Data Release Authorized: VD
Reported: 07/21/11

QC Report No: TE80-The Boeing Company
Project: NBF
025082.311
Date Sampled: 07/19/11
Date Received: 07/20/11

Instrument/Analyst: NT3/PKC
Date Analyzed: 07/21/11 13:30

Sample Amount: 10.0 mL
Purge Volume: 10.0 mL

CAS Number	Analyte	RL	Result	Q
74-87-3	Chloromethane	0.5	< 0.5	U
74-83-9	Bromomethane	1.0	< 1.0	U
75-01-4	Vinyl Chloride	0.2	< 0.2	U
75-00-3	Chloroethane	0.2	< 0.2	U
75-09-2	Methylene Chloride	0.5	< 0.5	U
67-64-1	Acetone	5.0	< 5.0	U
75-15-0	Carbon Disulfide	0.2	< 0.2	U
75-35-4	1,1-Dichloroethene	0.2	< 0.2	U
75-34-3	1,1-Dichloroethane	0.2	< 0.2	U
156-60-5	trans-1,2-Dichloroethene	0.2	< 0.2	U
156-59-2	cis-1,2-Dichloroethene	0.2	< 0.2	U
67-66-3	Chloroform	0.2	< 0.2	U
107-06-2	1,2-Dichloroethane	0.2	< 0.2	U
78-93-3	2-Butanone	5.0	< 5.0	U
71-55-6	1,1,1-Trichloroethane	0.2	< 0.2	U
56-23-5	Carbon Tetrachloride	0.2	< 0.2	U
108-05-4	Vinyl Acetate	1.0	< 1.0	U
75-27-4	Bromodichloromethane	0.2	< 0.2	U
78-87-5	1,2-Dichloropropane	0.2	< 0.2	U
10061-01-5	cis-1,3-Dichloropropene	0.2	< 0.2	U
79-01-6	Trichloroethene	0.2	< 0.2	U
124-48-1	Dibromochloromethane	0.2	< 0.2	U
79-00-5	1,1,2-Trichloroethane	0.2	< 0.2	U
71-43-2	Benzene	0.2	< 0.2	U
10061-02-6	trans-1,3-Dichloropropene	0.2	< 0.2	U
110-75-8	2-Chloroethylvinylether	1.0	< 1.0	U
75-25-2	Bromoform	0.2	< 0.2	U
108-10-1	4-Methyl-2-Pentanone (MIBK)	5.0	< 5.0	U
591-78-6	2-Hexanone	5.0	< 5.0	U
127-18-4	Tetrachloroethene	0.2	< 0.2	U
79-34-5	1,1,2,2-Tetrachloroethane	0.2	< 0.2	U
108-88-3	Toluene	0.2	< 0.2	U
108-90-7	Chlorobenzene	0.2	< 0.2	U
100-41-4	Ethylbenzene	0.2	< 0.2	U
100-42-5	Styrene	0.2	< 0.2	U
75-69-4	Trichlorofluoromethane	0.2	< 0.2	U

ANALYTICAL RESOURCES INCORPORATED

ORGANICS ANALYSIS DATA SHEET
Volatiles by Purge & Trap GC/MS-Method SW8260C **Sample ID: Trip Blanks**
 SAMPLE

Lab Sample ID: TE80D
LIMS ID: 11-15475
Matrix: Water
Date Analyzed: 07/21/11 13:30

QC Report No: TE80-The Boeing Company
Project: NBF
025082.311

CAS Number	Analyte	RL	Result	Q
76-13-1	1,1,2-Trichloro-1,2,2-trifluoroe	0.2	< 0.2	U
179601-23-1	m,p-Xylene	0.4	< 0.4	U
95-47-6	o-Xylene	0.2	< 0.2	U
95-50-1	1,2-Dichlorobenzene	0.2	< 0.2	U
541-73-1	1,3-Dichlorobenzene	0.2	< 0.2	U
106-46-7	1,4-Dichlorobenzene	0.2	< 0.2	U
107-02-8	Acrolein	5.0	< 5.0	U
74-88-4	Methyl Iodide	1.0	< 1.0	U
74-96-4	Bromoethane	0.2	< 0.2	U
107-13-1	Acrylonitrile	1.0	< 1.0	U
563-58-6	1,1-Dichloropropene	0.2	< 0.2	U
74-95-3	Dibromomethane	0.2	< 0.2	U
630-20-6	1,1,1,2-Tetrachloroethane	0.2	< 0.2	U
96-12-8	1,2-Dibromo-3-chloropropane	0.5	< 0.5	U
96-18-4	1,2,3-Trichloropropane	0.5	< 0.5	U
110-57-6	trans-1,4-Dichloro-2-butene	1.0	< 1.0	U
108-67-8	1,3,5-Trimethylbenzene	0.2	< 0.2	U
95-63-6	1,2,4-Trimethylbenzene	0.2	< 0.2	U
87-68-3	Hexachlorobutadiene	0.5	< 0.5	U
106-93-4	Ethylene Dibromide	0.2	< 0.2	U
74-97-5	Bromochloromethane	0.2	< 0.2	U
594-20-7	2,2-Dichloropropane	0.2	< 0.2	U
142-28-9	1,3-Dichloropropane	0.2	< 0.2	U
98-82-8	Isopropylbenzene	0.2	< 0.2	U
103-65-1	n-Propylbenzene	0.2	< 0.2	U
108-86-1	Bromobenzene	0.2	< 0.2	U
95-49-8	2-Chlorotoluene	0.2	< 0.2	U
106-43-4	4-Chlorotoluene	0.2	< 0.2	U
98-06-6	tert-Butylbenzene	0.2	< 0.2	U
135-98-8	sec-Butylbenzene	0.2	< 0.2	U
99-87-6	4-Isopropyltoluene	0.2	< 0.2	U
104-51-8	n-Butylbenzene	0.2	< 0.2	U
120-82-1	1,2,4-Trichlorobenzene	0.5	< 0.5	U
91-20-3	Naphthalene	0.5	< 0.5	U
87-61-6	1,2,3-Trichlorobenzene	0.5	< 0.5	U

Reported in µg/L (ppb)

Volatile Surrogate Recovery

d4-1,2-Dichloroethane	87.3%
d8-Toluene	98.8%
Bromofluorobenzene	93.6%
d4-1,2-Dichlorobenzene	99.4%

2-Chloroethylvinylether is an acid labile compound and may not be recovered from an acid preserved sample.

ANALYTICAL RESOURCES INCORPORATED

ORGANICS ANALYSIS DATA SHEET
Volatiles by Purge & Trap GC/MS-Method SW8260C **Sample ID: MB-072111**
 METHOD BLANK

Lab Sample ID: MB-072111
LIMS ID: 11-15472
Matrix: Water
Data Release Authorized: VD
Reported: 07/21/11

QC Report No: TE80-The Boeing Company
Project: NBF
025082.311
Date Sampled: NA
Date Received: NA

Instrument/Analyst: NT3/PKC
Date Analyzed: 07/21/11 13:04

Sample Amount: 10.0 mL
Purge Volume: 10.0 mL

CAS Number	Analyte	RL	Result	Q
74-87-3	Chloromethane	0.5	< 0.5	U
74-83-9	Bromomethane	1.0	< 1.0	U
75-01-4	Vinyl Chloride	0.2	< 0.2	U
75-00-3	Chloroethane	0.2	< 0.2	U
75-09-2	Methylene Chloride	0.5	< 0.5	U
67-64-1	Acetone	5.0	< 5.0	U
75-15-0	Carbon Disulfide	0.2	< 0.2	U
75-35-4	1,1-Dichloroethene	0.2	< 0.2	U
75-34-3	1,1-Dichloroethane	0.2	< 0.2	U
156-60-5	trans-1,2-Dichloroethene	0.2	< 0.2	U
156-59-2	cis-1,2-Dichloroethene	0.2	< 0.2	U
67-66-3	Chloroform	0.2	< 0.2	U
107-06-2	1,2-Dichloroethane	0.2	< 0.2	U
78-93-3	2-Butanone	5.0	< 5.0	U
71-55-6	1,1,1-Trichloroethane	0.2	< 0.2	U
56-23-5	Carbon Tetrachloride	0.2	< 0.2	U
108-05-4	Vinyl Acetate	1.0	< 1.0	U
75-27-4	Bromodichloromethane	0.2	< 0.2	U
78-87-5	1,2-Dichloropropane	0.2	< 0.2	U
10061-01-5	cis-1,3-Dichloropropene	0.2	< 0.2	U
79-01-6	Trichloroethene	0.2	< 0.2	U
124-48-1	Dibromochloromethane	0.2	< 0.2	U
79-00-5	1,1,2-Trichloroethane	0.2	< 0.2	U
71-43-2	Benzene	0.2	< 0.2	U
10061-02-6	trans-1,3-Dichloropropene	0.2	< 0.2	U
110-75-8	2-Chloroethylvinylether	1.0	< 1.0	U
75-25-2	Bromoform	0.2	< 0.2	U
108-10-1	4-Methyl-2-Pentanone (MIBK)	5.0	< 5.0	U
591-78-6	2-Hexanone	5.0	< 5.0	U
127-18-4	Tetrachloroethene	0.2	< 0.2	U
79-34-5	1,1,2,2-Tetrachloroethane	0.2	< 0.2	U
108-88-3	Toluene	0.2	< 0.2	U
108-90-7	Chlorobenzene	0.2	< 0.2	U
100-41-4	Ethylbenzene	0.2	< 0.2	U
100-42-5	Styrene	0.2	< 0.2	U
75-69-4	Trichlorofluoromethane	0.2	< 0.2	U

ANALYTICAL RESOURCES INCORPORATED

ORGANICS ANALYSIS DATA SHEET
Volatiles by Purge & Trap GC/MS-Method SW8260C **Sample ID: MB-072111**
 METHOD BLANK

Lab Sample ID: MB-072111
LIMS ID: 11-15472
Matrix: Water
Date Analyzed: 07/21/11 13:04

QC Report No: TE80-The Boeing Company
Project: NBF
025082.311

CAS Number	Analyte	RL	Result	Q
76-13-1	1,1,2-Trichloro-1,2,2-trifluoroe	0.2	< 0.2	U
179601-23-1	m,p-Xylene	0.4	< 0.4	U
95-47-6	o-Xylene	0.2	< 0.2	U
95-50-1	1,2-Dichlorobenzene	0.2	< 0.2	U
541-73-1	1,3-Dichlorobenzene	0.2	< 0.2	U
106-46-7	1,4-Dichlorobenzene	0.2	< 0.2	U
107-02-8	Acrolein	5.0	< 5.0	U
74-88-4	Methyl Iodide	1.0	< 1.0	U
74-96-4	Bromoethane	0.2	< 0.2	U
107-13-1	Acrylonitrile	1.0	< 1.0	U
563-58-6	1,1-Dichloropropene	0.2	< 0.2	U
74-95-3	Dibromomethane	0.2	< 0.2	U
630-20-6	1,1,1,2-Tetrachloroethane	0.2	< 0.2	U
96-12-8	1,2-Dibromo-3-chloropropane	0.5	< 0.5	U
96-18-4	1,2,3-Trichloropropane	0.5	< 0.5	U
110-57-6	trans-1,4-Dichloro-2-butene	1.0	< 1.0	U
108-67-8	1,3,5-Trimethylbenzene	0.2	< 0.2	U
95-63-6	1,2,4-Trimethylbenzene	0.2	< 0.2	U
87-68-3	Hexachlorobutadiene	0.5	< 0.5	U
106-93-4	Ethylene Dibromide	0.2	< 0.2	U
74-97-5	Bromochloromethane	0.2	< 0.2	U
594-20-7	2,2-Dichloropropane	0.2	< 0.2	U
142-28-9	1,3-Dichloropropane	0.2	< 0.2	U
98-82-8	Isopropylbenzene	0.2	< 0.2	U
103-65-1	n-Propylbenzene	0.2	< 0.2	U
108-86-1	Bromobenzene	0.2	< 0.2	U
95-49-8	2-Chlorotoluene	0.2	< 0.2	U
106-43-4	4-Chlorotoluene	0.2	< 0.2	U
98-06-6	tert-Butylbenzene	0.2	< 0.2	U
135-98-8	sec-Butylbenzene	0.2	< 0.2	U
99-87-6	4-Isopropyltoluene	0.2	< 0.2	U
104-51-8	n-Butylbenzene	0.2	< 0.2	U
120-82-1	1,2,4-Trichlorobenzene	0.5	< 0.5	U
91-20-3	**Naphthalene**	**0.5**	**0.5**	**Q**
87-61-6	**1,2,3-Trichlorobenzene**	**0.5**	**0.6**	**Q**

Reported in µg/L (ppb)

Volatile Surrogate Recovery

d4-1,2-Dichloroethane	83.6%
d8-Toluene	99.1%
Bromofluorobenzene	94.6%
d4-1,2-Dichlorobenzene	96.8%

ANALYTICAL RESOURCES INCORPORATED

VOA SURROGATE RECOVERY SUMMARY

Matrix: Water

QC Report No: TE80-The Boeing Company
Project: NBF
025082.311

ARI ID	Client ID	PV	DCE	TOL	BFB	DCB	TOT OUT
MB-072111	Method Blank	10	83.6%	99.1%	94.6%	96.8%	0
LCS-072111	Lab Control	10	81.5%	98.4%	94.7%	98.1%	0
LCSD-072111	Lab Control Dup	10	84.5%	98.6%	97.4%	95.6%	0
TE80A	DW-09-072011	10	83.6%	99.1%	94.9%	99.2%	0
TE80B	DW-11-072011	10	85.8%	98.5%	93.4%	96.6%	0
TE80C	DW-12-072011	10	86.2%	98.6%	94.5%	97.1%	0
TE80D	Trip Blanks	10	87.3%	98.8%	93.6%	99.4%	0

	LCS/MB LIMITS	QC LIMITS
SW8260C		
(DCE) = d4-1,2-Dichloroethane	80-120	80-120
(TOL) = d8-Toluene	80-120	80-120
(BFB) = Bromofluorobenzene	80-120	80-120
(DCB) = d4-1,2-Dichlorobenzene	80-120	80-120

Prep Method: SW5030B
Log Number Range: 11-15472 to 11-15475

ANALYTICAL RESOURCES INCORPORATED

ORGANICS ANALYSIS DATA SHEET
Volatiles by Purge & Trap GC/MS-Method SW8260C **Sample ID: LCS-072111**
 LAB CONTROL SAMPLE

Lab Sample ID: LCS-072111
LIMS ID: 11-15472
Matrix: Water
Data Release Authorized: VD
Reported: 07/21/11

QC Report No: TE80-The Boeing Company
Project: NBF
025082.311
Date Sampled: NA
Date Received: NA

Instrument/Analyst LCS: NT3/PKC
LCSD: NT3/PKC
Date Analyzed LCS: 07/21/11 12:10
LCSD: 07/21/11 12:37

Sample Amount LCS: 10.0 mL
LCSD: 10.0 mL
Purge Volume LCS: 10.0 mL
LCSD: 10.0 mL

Analyte	LCS	Spike Added-LCS	LCS Recovery	LCSD	Spike Added-LCSD	LCSD Recovery	RPD
Chloromethane	8.6	10.0	86.0%	9.1	10.0	91.0%	5.6%
Bromomethane	8.6	10.0	86.0%	9.1	10.0	91.0%	5.6%
Vinyl Chloride	9.0	10.0	90.0%	9.6	10.0	96.0%	6.5%
Chloroethane	8.3	10.0	83.0%	8.9	10.0	89.0%	7.0%
Methylene Chloride	8.4	10.0	84.0%	8.8	10.0	88.0%	4.7%
Acetone	35.9 Q	50.0	71.8%	36.9 Q	50.0	73.8%	2.7%
Carbon Disulfide	9.0	10.0	90.0%	9.6	10.0	96.0%	6.5%
1,1-Dichloroethene	8.8	10.0	88.0%	9.3	10.0	93.0%	5.5%
1,1-Dichloroethane	8.8	10.0	88.0%	9.3	10.0	93.0%	5.5%
trans-1,2-Dichloroethene	8.9	10.0	89.0%	9.7	10.0	97.0%	8.6%
cis-1,2-Dichloroethene	8.7	10.0	87.0%	9.3	10.0	93.0%	6.7%
Chloroform	8.8	10.0	88.0%	9.4	10.0	94.0%	6.6%
1,2-Dichloroethane	8.8	10.0	88.0%	9.0	10.0	90.0%	2.2%
2-Butanone	35.0 Q	50.0	70.0%	37.5 Q	50.0	75.0%	6.9%
1,1,1-Trichloroethane	9.4	10.0	94.0%	10.1	10.0	101%	7.2%
Carbon Tetrachloride	9.7	10.0	97.0%	10.1	10.0	101%	4.0%
Vinyl Acetate	7.6 Q	10.0	76.0%	8.0 Q	10.0	80.0%	5.1%
Bromodichloromethane	8.4	10.0	84.0%	8.9	10.0	89.0%	5.8%
1,2-Dichloropropane	8.6	10.0	86.0%	9.1	10.0	91.0%	5.6%
cis-1,3-Dichloropropene	8.8	10.0	88.0%	9.2	10.0	92.0%	4.4%
Trichloroethene	9.7	10.0	97.0%	10.2	10.0	102%	5.0%
Dibromochloromethane	8.6	10.0	86.0%	9.2	10.0	92.0%	6.7%
1,1,2-Trichloroethane	8.3	10.0	83.0%	8.6	10.0	86.0%	3.6%
Benzene	9.5	10.0	95.0%	10.0	10.0	100%	5.1%
trans-1,3-Dichloropropene	8.6	10.0	86.0%	8.9	10.0	89.0%	3.4%
2-Chloroethylvinylether	8.1	10.0	81.0%	7.6	10.0	76.0%	6.4%
Bromoform	8.9	10.0	89.0%	9.2	10.0	92.0%	3.3%
4-Methyl-2-Pentanone (MIBK)	39.3	50.0	78.6%	41.9	50.0	83.8%	6.4%
2-Hexanone	41.1	50.0	82.2%	41.7	50.0	83.4%	1.4%
Tetrachloroethene	10.0	10.0	100%	10.5	10.0	105%	4.9%
1,1,2,2-Tetrachloroethane	8.3	10.0	83.0%	8.3	10.0	83.0%	0.0%
Toluene	9.4	10.0	94.0%	9.9	10.0	99.0%	5.2%
Chlorobenzene	9.2	10.0	92.0%	9.7	10.0	97.0%	5.3%
Ethylbenzene	10.0	10.0	100%	10.5	10.0	105%	4.9%
Styrene	9.3	10.0	93.0%	9.8	10.0	98.0%	5.2%
Trichlorofluoromethane	9.2	10.0	92.0%	9.9	10.0	99.0%	7.3%
1,1,2-Trichloro-1,2,2-trifluoroetha	9.0	10.0	90.0%	9.6	10.0	96.0%	6.5%
m,p-Xylene	20.0	20.0	100%	21.0	20.0	105%	4.9%

ANALYTICAL RESOURCES INCORPORATED

ORGANICS ANALYSIS DATA SHEET
Volatiles by Purge & Trap GC/MS-Method SW8260C **Sample ID: LCS-072111**

LAB CONTROL SAMPLE

Lab Sample ID: LCS-072111
LIMS ID: 11-15472
Matrix: Water

QC Report No: TE80-The Boeing Company
Project: NBF
025082.311

Analyte	LCS	Spike Added-LCS	LCS Recovery	LCSD	Spike Added-LCSD	LCSD Recovery	RPD
o-Xylene	9.6	10.0	96.0%	10.1	10.0	101%	5.1%
1,2-Dichlorobenzene	8.9	10.0	89.0%	9.3	10.0	93.0%	4.4%
1,3-Dichlorobenzene	9.3	10.0	93.0%	9.6	10.0	96.0%	3.2%
1,4-Dichlorobenzene	9.3	10.0	93.0%	9.6	10.0	96.0%	3.2%
Acrolein	39.0	50.0	78.0%	38.2	50.0	76.4%	2.1%
Methyl Iodide	8.7	10.0	87.0%	9.4	10.0	94.0%	7.7%
Bromoethane	8.9	10.0	89.0%	9.4	10.0	94.0%	5.5%
Acrylonitrile	7.2	10.0	72.0%	8.3	10.0	83.0%	14.2%
1,1-Dichloropropene	10.0	10.0	100%	10.5	10.0	105%	4.9%
Dibromomethane	8.5	10.0	85.0%	8.4	10.0	84.0%	1.2%
1,1,1,2-Tetrachloroethane	9.0	10.0	90.0%	9.4	10.0	94.0%	4.3%
1,2-Dibromo-3-chloropropane	7.4	10.0	74.0%	7.6	10.0	76.0%	2.7%
1,2,3-Trichloropropane	9.1	10.0	91.0%	8.9	10.0	89.0%	2.2%
trans-1,4-Dichloro-2-butene	9.6	10.0	96.0%	10.0	10.0	100%	4.1%
1,3,5-Trimethylbenzene	10.7	10.0	107%	10.8	10.0	108%	0.9%
1,2,4-Trimethylbenzene	10.3	10.0	103%	10.5	10.0	105%	1.9%
Hexachlorobutadiene	9.1	10.0	91.0%	9.3	10.0	93.0%	2.2%
Ethylene Dibromide	8.1	10.0	81.0%	9.0	10.0	90.0%	10.5%
Bromochloromethane	7.8	10.0	78.0%	8.2	10.0	82.0%	5.0%
2,2-Dichloropropane	9.3	10.0	93.0%	10.2	10.0	102%	9.2%
1,3-Dichloropropane	8.7	10.0	87.0%	9.2	10.0	92.0%	5.6%
Isopropylbenzene	11.1	10.0	111%	11.3	10.0	113%	1.8%
n-Propylbenzene	10.9	10.0	109%	11.2	10.0	112%	2.7%
Bromobenzene	9.4	10.0	94.0%	9.8	10.0	98.0%	4.2%
2-Chlorotoluene	10.1	10.0	101%	10.2	10.0	102%	1.0%
4-Chlorotoluene	10.0	10.0	100%	10.3	10.0	103%	3.0%
tert-Butylbenzene	10.6	10.0	106%	10.9	10.0	109%	2.8%
sec-Butylbenzene	11.0	10.0	110%	11.2	10.0	112%	1.8%
4-Isopropyltoluene	10.8	10.0	108%	11.0	10.0	110%	1.8%
n-Butylbenzene	10.7	10.0	107%	10.8	10.0	108%	0.9%
1,2,4-Trichlorobenzene	8.2	10.0	82.0%	8.2	10.0	82.0%	0.0%
Naphthalene	7.4 Q	10.0	74.0%	7.4 Q	10.0	74.0%	0.0%
1,2,3-Trichlorobenzene	7.2 Q	10.0	72.0%	7.4 Q	10.0	74.0%	2.7%

Reported in µg/L (ppb)

RPD calculated using sample concentrations per SW846.

Volatile Surrogate Recovery

	LCS	LCSD
d4-1,2-Dichloroethane	81.5%	84.5%
d8-Toluene	98.4%	98.6%
Bromofluorobenzene	94.7%	97.4%
d4-1,2-Dichlorobenzene	98.1%	95.6%

ANALYTICAL RESOURCES INCORPORATED

ORGANICS ANALYSIS DATA SHEET
TOTAL DIESEL RANGE HYDROCARBONS
NWTPHD by GC/FID-Silica and Acid Cleaned
Page 1 of 1
Matrix: Water

QC Report No: TE80-The Boeing Company
Project: NBF
025082.311

Data Release Authorized: VD
Reported: 07/21/11

ARI ID	Sample ID	Extraction Date	Analysis Date	EFV DL	Range	RL	Result
MB-072011	Method Blank	07/20/11	07/20/11	1.00	Diesel	0.10	< 0.10 U
11-15472	HC ID: ---		FID4A	1.0	Motor Oil	0.20	< 0.20 U
					o-Terphenyl		119%
TE80A	DW-09-072011	07/20/11	07/20/11	1.00	Diesel	0.10	< 0.10 U
11-15472	HC ID: ---		FID4A	1.0	Motor Oil	0.20	< 0.20 U
					o-Terphenyl		126%
TE80B	DW-11-072011	07/20/11	07/20/11	1.00	**Diesel**	**0.10**	**0.30**
11-15473	HC ID: **DRO**		FID4A	1.0	Motor Oil	0.20	< 0.20 U
					o-Terphenyl		105%
TE80C	DW-12-072011	07/20/11	07/20/11	1.00	Diesel	0.10	< 0.10 U
11-15474	HC ID: ---		FID4A	1.0	Motor Oil	0.20	< 0.20 U
					o-Terphenyl		123%

Reported in mg/L (ppm)

EFV-Effective Final Volume in mL.
DL-Dilution of extract prior to analysis.
RL-Reporting limit.

Diesel quantitation on total peaks in the range from C12 to C24.
Motor Oil quantitation on total peaks in the range from C24 to C38.
HC ID: DRO/RRO indicate results of organics or additional hydrocarbons in ranges are not identifiable.

ANALYTICAL RESOURCES INCORPORATED

CLEANED TPHD SURROGATE RECOVERY SUMMARY

Matrix: Water

QC Report No: TE80-The Boeing Company
Project: NBF
025082.311

Client ID	OTER	TOT OUT
MB-072011	119%	0
LCS-072011	122%	0
LCSD-072011	123%	0
DW-09-072011	126%	0
DW-11-072011	105%	0
DW-12-072011	123%	0

	LCS/MB LIMITS	QC LIMITS
(OTER) = o-Terphenyl	(50-150)	(50-150)

Prep Method: SW3510C
Log Number Range: 11-15472 to 11-15474

FORM-II TPHD

ANALYTICAL RESOURCES INCORPORATED

ORGANICS ANALYSIS DATA SHEET
NWTPHD by GC/FID-Silica and Acid Cleaned

Sample ID: LCS-072011
LCS/LCSD

Lab Sample ID: LCS-072011
LIMS ID: 11-15472
Matrix: Water
Data Release Authorized: VIP
Reported: 07/21/11

QC Report No: TE80-The Boeing Company
Project: NBF
025082.311
Date Sampled: 07/20/11
Date Received: 07/20/11

Date Extracted LCS/LCSD: 07/20/11

Date Analyzed LCS: 07/20/11 20:53
LCSD: 07/20/11 21:16
Instrument/Analyst LCS: FID/MH
LCSD: FID/MH

Sample Amount LCS: 500 mL
LCSD: 500 mL
Final Extract Volume LCS: 1.0 mL
LCSD: 1.0 mL
Dilution Factor LCS: 1.00
LCSD: 1.00

Range	LCS	Spike Added-LCS	LCS Recovery	LCSD	Spike Added-LCSD	LCSD Recovery	RPD
Diesel	3.07	3.00	102%	3.08	3.00	103%	0.3%

TPHD Surrogate Recovery

	LCS	LCSD
o-Terphenyl	122%	123%

Results reported in mg/L
RPD calculated using sample concentrations per SW846.

ANALYTICAL RESOURCES INCORPORATED

TOTAL DIESEL RANGE HYDROCARBONS-EXTRACTION REPORT

ARI Job: TE80
Project: NBF
025082.311

Matrix: Water
Date Received: 07/20/11

ARI ID	Client ID	Samp Amt	Final Vol	Prep Date
11-15472-072011MB1	Method Blank	500 mL	1.00 mL	07/20/11
11-15472-072011LCS1	Lab Control	500 mL	1.00 mL	07/20/11
11-15472-072011LCSD1	Lab Control Dup	500 mL	1.00 mL	07/20/11
11-15472-TE80A	DW-09-072011	500 mL	1.00 mL	07/20/11
11-15473-TE80B	DW-11-072011	500 mL	1.00 mL	07/20/11
11-15474-TE80C	DW-12-072011	500 mL	1.00 mL	07/20/11

ANALYTICAL RESOURCES INCORPORATED

ORGANICS ANALYSIS DATA SHEET
TPHG by Method NWTPHG
Matrix: Water

Data Release Authorized: VJ
Reported: 07/21/11

QC Report No: TE80-The Boeing Company
Project: NBF
Event: 025082.311
Date Sampled: 07/20/11
Date Received: 07/20/11

ARI ID	Client ID	Analysis Date	DL	Range	Result
MB-072011	Method Blank	07/20/11	1.0	Gasoline	< 0.25 U
11-15472		PID1		HC ID	---
				Trifluorotoluene	105%
				Bromobenzene	101%
TE80A	DW-09-072011	07/20/11	1.0	Gasoline	< 0.25 U
11-15472		PID1		HC ID	---
				Trifluorotoluene	99.8%
				Bromobenzene	97.0%
TE80B	DW-11-072011	07/20/11	1.0	Gasoline	< 0.25 U
11-15473		PID1		HC ID	---
				Trifluorotoluene	98.4%
				Bromobenzene	96.9%
TE80C	DW-12-072011	07/21/11	1.0	Gasoline	< 0.25 U
11-15474		PID1		HC ID	---
				Trifluorotoluene	102%
				Bromobenzene	100%
TE80D	Trip Blanks	07/20/11	1.0	Gasoline	< 0.25 U
11-15475		PID1		HC ID	---
				Trifluorotoluene	102%
				Bromobenzene	98.0%

Gasoline values reported in mg/L (ppm)

Quantitation on total peaks in the gasoline range from Toluene to Naphthalene.

GAS: Indicates the presence of gasoline or weathered gasoline.
GRO: Positive result that does not match an identifiable gasoline pattern.

FORM I

ANALYTICAL RESOURCES INCORPORATED

TPHG WATER SURROGATE RECOVERY SUMMARY

ARI Job: TE80
Matrix: Water

QC Report No: TE80-The Boeing Company
Project: NBF
Event: 025082.311

Client ID	TFT	BBZ	TOT OUT
MB-072011	105%	101%	0
LCS-072011	110%	102%	0
LCSD-072011	105%	97.7%	0
DW-09-072011	99.8%	97.0%	0
DW-11-072011	98.4%	96.9%	0
DW-12-072011	102%	100%	0
Trip Blanks	102%	98.0%	0

	LCS/MB LIMITS	QC LIMITS
(TFT) = Trifluorotoluene	(80-120)	(80-120)
(BBZ) = Bromobenzene	(80-120)	(80-120)

Log Number Range: 11-15472 to 11-15475

FORM II TPHG

ANALYTICAL RESOURCES INCORPORATED

ORGANICS ANALYSIS DATA SHEET
TPHG by Method NWTPHG

Sample ID: LCS-072011
LAB CONTROL SAMPLE

Lab Sample ID: LCS-072011
LIMS ID: 11-15472
Matrix: Water
Data Release Authorized:
Reported: 07/21/11

QC Report No: TE80-The Boeing Company
Project: NBF
Event: 025082.311
Date Sampled: NA
Date Received: NA

Date Analyzed LCS: 07/20/11 10:24
LCSD: 07/20/11 10:53
Instrument/Analyst LCS: PID1/MH
LCSD: PID1/MH

Purge Volume: 5.0 mL

Dilution Factor LCS: 1.0
LCSD: 1.0

Analyte	LCS	Spike Added-LCS	LCS Recovery	LCSD	Spike Added-LCSD	LCSD Recovery	RPD
Gasoline Range Hydrocarbons	1.14	1.00	114%	1.04	1.00	104%	9.2%

Reported in mg/L (ppm)

RPD calculated using sample concentrations per SW846.

TPHG Surrogate Recovery

	LCS	LCSD
Trifluorotoluene	110%	105%
Bromobenzene	102%	97.7%

ANALYTICAL RESOURCES INCORPORATED

ORGANICS ANALYSIS DATA SHEET
PCB by GC/ECD Method SW8082

Sample ID: DW-09-072011
SAMPLE

Lab Sample ID: TE80A
LIMS ID: 11-15472
Matrix: Water
Data Release Authorized: VG
Reported: 07/21/11

QC Report No: TE80-The Boeing Company
Project: NBF
025082.311
Date Sampled: 07/20/11
Date Received: 07/20/11

Date Extracted: 07/20/11
Date Analyzed: 07/21/11 08:58
Instrument/Analyst: ECD5/JGR
GPC Cleanup: No
Sulfur Cleanup: Yes

Sample Amount: 1000 mL
Final Extract Volume: 0.50 mL
Dilution Factor: 1.00
Silica Gel: Yes
Acid Cleanup: Yes

CAS Number	Analyte	RL	Result
12674-11-2	Aroclor 1016	0.010	< 0.010 U
53469-21-9	Aroclor 1242	0.010	< 0.010 U
12672-29-6	Aroclor 1248	0.010	< 0.010 U
11097-69-1	Aroclor 1254	0.010	< 0.010 U
11096-82-5	Aroclor 1260	0.010	< 0.010 U
11104-28-2	Aroclor 1221	0.010	< 0.010 U
11141-16-5	Aroclor 1232	0.010	< 0.010 U
37324-23-5	Aroclor 1262	0.010	< 0.010 U

Reported in µg/L (ppb)

PCB Surrogate Recovery

Decachlorobiphenyl	62.5%
Tetrachlorometaxylene	49.0%

ANALYTICAL RESOURCES INCORPORATED

ORGANICS ANALYSIS DATA SHEET
PCB by GC/ECD Method SW8082

Sample ID: DW-11-072011
SAMPLE

Lab Sample ID: TE80B
LIMS ID: 11-15473
Matrix: Water
Data Release Authorized: VB
Reported: 07/21/11

QC Report No: TE80-The Boeing Company
Project: NBF
025082.311
Date Sampled: 07/20/11
Date Received: 07/20/11

Date Extracted: 07/20/11
Date Analyzed: 07/21/11 09:17
Instrument/Analyst: ECD5/JGR
GPC Cleanup: No
Sulfur Cleanup: Yes

Sample Amount: 1000 mL
Final Extract Volume: 0.50 mL
Dilution Factor: 1.00
Silica Gel: Yes
Acid Cleanup: Yes

CAS Number	Analyte	RL	Result
12674-11-2	Aroclor 1016	0.010	< 0.010 U
53469-21-9	Aroclor 1242	0.010	< 0.010 U
12672-29-6	Aroclor 1248	0.010	< 0.010 U
11097-69-1	Aroclor 1254	0.010	< 0.010 U
11096-82-5	Aroclor 1260	0.010	< 0.010 U
11104-28-2	Aroclor 1221	0.010	< 0.010 U
11141-16-5	Aroclor 1232	0.010	< 0.010 U
37324-23-5	Aroclor 1262	0.010	< 0.010 U

Reported in µg/L (ppb)

PCB Surrogate Recovery

Decachlorobiphenyl	27.8%
Tetrachlorometaxylene	47.5%

ANALYTICAL RESOURCES INCORPORATED

ORGANICS ANALYSIS DATA SHEET
PCB by GC/ECD Method SW8082

Sample ID: DW-12-072011
SAMPLE

Lab Sample ID: TE80C
LIMS ID: 11-15474
Matrix: Water
Data Release Authorized: VD
Reported: 07/21/11

QC Report No: TE80-The Boeing Company
Project: NBF
025082.311
Date Sampled: 07/20/11
Date Received: 07/20/11

Date Extracted: 07/20/11
Date Analyzed: 07/21/11 09:35
Instrument/Analyst: ECD5/JGR
GPC Cleanup: No
Sulfur Cleanup: Yes

Sample Amount: 1000 mL
Final Extract Volume: 0.50 mL
Dilution Factor: 1.00
Silica Gel: Yes
Acid Cleanup: Yes

CAS Number	Analyte	RL	Result
12674-11-2	Aroclor 1016	0.010	< 0.010 U
53469-21-9	Aroclor 1242	0.010	< 0.010 U
12672-29-6	Aroclor 1248	0.010	< 0.010 U
11097-69-1	Aroclor 1254	0.010	< 0.010 U
11096-82-5	Aroclor 1260	0.010	< 0.010 U
11104-28-2	Aroclor 1221	0.010	< 0.010 U
11141-16-5	Aroclor 1232	0.010	< 0.010 U
37324-23-5	Aroclor 1262	0.010	< 0.010 U

Reported in µg/L (ppb)

PCB Surrogate Recovery

Decachlorobiphenyl	56.5%
Tetrachlorometaxylene	48.5%

ANALYTICAL RESOURCES INCORPORATED

ORGANICS ANALYSIS DATA SHEET
PCB by GC/ECD Method SW8082

Sample ID: MB-072011
METHOD BLANK

Lab Sample ID: MB-072011
LIMS ID: 11-15472
Matrix: Water
Data Release Authorized: VT
Reported: 07/21/11

QC Report No: TE80-The Boeing Company
Project: NBF
025082.311
Date Sampled: NA
Date Received: NA

Date Extracted: 07/20/11
Date Analyzed: 07/21/11 09:54
Instrument/Analyst: ECD5/JGR
GPC Cleanup: No
Sulfur Cleanup: Yes

Sample Amount: 1000 mL
Final Extract Volume: 0.50 mL
Dilution Factor: 1.00
Silica Gel: Yes
Acid Cleanup: Yes

CAS Number	Analyte	RL	Result
12674-11-2	Aroclor 1016	0.010	< 0.010 U
53469-21-9	Aroclor 1242	0.010	< 0.010 U
12672-29-6	Aroclor 1248	0.010	< 0.010 U
11097-69-1	Aroclor 1254	0.010	< 0.010 U
11096-82-5	Aroclor 1260	0.010	< 0.010 U
11104-28-2	Aroclor 1221	0.010	< 0.010 U
11141-16-5	Aroclor 1232	0.010	< 0.010 U
37324-23-5	Aroclor 1262	0.010	< 0.010 U

Reported in µg/L (ppb)

PCB Surrogate Recovery

Decachlorobiphenyl	65.5%
Tetrachlorometaxylene	47.8%

ANALYTICAL RESOURCES INCORPORATED

SW8082/PCB WATER SURROGATE RECOVERY SUMMARY

Matrix: Water

QC Report No: TE80-The Boeing Company
Project: NBF
025082.311

Client ID	DCBP % REC	DCBP LCL-UCL	TCMX % REC	TCMX LCL-UCL	TOT OUT
MB-072011	65.5%	32-108	47.8%	31-100	0
LCS-072011	71.8%	32-108	47.5%	31-100	0
LCSD-072011	72.5%	32-108	45.2%	31-100	0
DW-09-072011	62.5%	19-111	49.0%	21-100	0
DW-11-072011	27.8%	19-111	47.5%	21-100	0
DW-12-072011	56.5%	19-111	48.5%	21-100	0

Prep Method: SW3510C
Log Number Range: 11-15472 to 11-15474

FORM-II SW8082

ANALYTICAL RESOURCES INCORPORATED

ORGANICS ANALYSIS DATA SHEET
PCB by GC/ECD Method SW8082

Sample ID: LCS-072011
LCS/LCSD

Lab Sample ID: LCS-072011
LIMS ID: 11-15472
Matrix: Water
Data Release Authorized:
Reported: 07/21/11

QC Report No: TE80-The Boeing Company
Project: NBF
025082.311
Date Sampled: NA
Date Received: NA

Date Extracted LCS/LCSD: 07/20/11

Date Analyzed LCS: 07/21/11 10:13
LCSD: 07/21/11 10:32
Instrument/Analyst LCS: ECD5/JGR
LCSD: ECD5/JGR
GPC Cleanup: No
Sulfur Cleanup: Yes

Sample Amount LCS: 1000 mL
LCSD: 1000 mL
Final Extract Volume LCS: 0.50 mL
LCSD: 0.50 mL
Dilution Factor LCS: 1.00
LCSD: 1.00
Silica Gel: Yes
Acid Cleanup: Yes

Analyte	LCS	Spike Added-LCS	LCS Recovery	LCSD	Spike Added-LCSD	LCSD Recovery	RPD
Aroclor 1016	0.034	0.050	68.0%	0.031	0.050	62.0%	9.2%
Aroclor 1260	0.042	0.050	84.0%	0.041	0.050	82.0%	2.4%

PCB Surrogate Recovery

	LCS	LCSD
Decachlorobiphenyl	71.8%	72.5%
Tetrachlorometaxylene	47.5%	45.2%

Results reported in µg/L
RPD calculated using sample concentrations per SW846.

ANALYTICAL RESOURCES INCORPORATED

INORGANICS ANALYSIS DATA SHEET
DISSOLVED METALS

Sample ID: DW-09-072011
SAMPLE

Lab Sample ID: TE80A
LIMS ID: 11-15472
Matrix: Water
Data Release Authorized:
Reported: 07/22/11

QC Report No: TE80-The Boeing Company
Project: NBF
025082.311
Date Sampled: 07/20/11
Date Received: 07/20/11

Prep Meth	Prep Date	Analysis Method	Analysis Date	CAS Number	Analyte	RL	µg/L	Q
200.8	07/21/11	200.8	07/21/11	**7440-38-2**	**Arsenic**	0.2	**1.2**	
200.8	07/21/11	200.8	07/21/11	7440-43-9	Cadmium	0.1	0.1	U
200.8	07/21/11	200.8	07/21/11	7440-47-3	Chromium	0.5	0.5	U
200.8	07/21/11	200.8	07/21/11	**7440-50-8**	**Copper**	0.5	**0.6**	
200.8	07/21/11	200.8	07/21/11	7439-92-1	Lead	0.1	0.1	U
7470A	07/21/11	7470A	07/21/11	7439-97-6	Mercury	0.1	0.1	U
200.8	07/21/11	200.8	07/21/11	**7440-02-0**	**Nickel**	0.5	**1.7**	
200.8	07/21/11	200.8	07/21/11	7440-66-6	Zinc	4	4	U

U-Analyte undetected at given RL
RL-Reporting Limit

ANALYTICAL RESOURCES INCORPORATED

INORGANICS ANALYSIS DATA SHEET
DISSOLVED METALS

Sample ID: DW-11-072011
SAMPLE

Lab Sample ID: TE80B
LIMS ID: 11-15473
Matrix: Water
Data Release Authorized:
Reported: 07/22/11

QC Report No: TE80-The Boeing Company
Project: NBF
025082.311
Date Sampled: 07/20/11
Date Received: 07/20/11

Prep Meth	Prep Date	Analysis Method	Analysis Date	CAS Number	Analyte	RL	µg/L	Q
200.8	07/21/11	200.8	07/21/11	**7440-38-2**	**Arsenic**	0.2	**2.2**	
200.8	07/21/11	200.8	07/21/11	7440-43-9	Cadmium	0.1	0.1	U
200.8	07/21/11	200.8	07/21/11	**7440-47-3**	**Chromium**	0.5	**1.3**	
200.8	07/21/11	200.8	07/21/11	**7440-50-8**	**Copper**	0.5	**1.0**	
200.8	07/21/11	200.8	07/21/11	7439-92-1	Lead	0.1	0.1	U
7470A	07/21/11	7470A	07/21/11	7439-97-6	Mercury	0.1	0.1	U
200.8	07/21/11	200.8	07/21/11	**7440-02-0**	**Nickel**	0.5	**1.7**	
200.8	07/21/11	200.8	07/21/11	**7440-66-6**	**Zinc**	4	**12**	

U-Analyte undetected at given RL
RL-Reporting Limit

ANALYTICAL RESOURCES INCORPORATED

INORGANICS ANALYSIS DATA SHEET
DISSOLVED METALS

Sample ID: DW-12-072011
SAMPLE

Lab Sample ID: TE80C
LIMS ID: 11-15474
Matrix: Water
Data Release Authorized:
Reported: 07/22/11

QC Report No: TE80-The Boeing Company
Project: NBF
025082.311
Date Sampled: 07/20/11
Date Received: 07/20/11

Prep Meth	Prep Date	Analysis Method	Analysis Date	CAS Number	Analyte	RL	µg/L	Q
200.8	07/21/11	200.8	07/21/11	**7440-38-2**	**Arsenic**	0.2	**1.8**	
200.8	07/21/11	200.8	07/21/11	7440-43-9	Cadmium	0.1	0.1	U
200.8	07/21/11	200.8	07/21/11	**7440-47-3**	**Chromium**	0.5	**0.8**	
200.8	07/21/11	200.8	07/21/11	**7440-50-8**	**Copper**	0.5	**3.4**	
200.8	07/21/11	200.8	07/21/11	**7439-92-1**	**Lead**	0.1	**0.4**	
7470A	07/21/11	7470A	07/21/11	7439-97-6	Mercury	0.1	0.1	U
200.8	07/21/11	200.8	07/21/11	**7440-02-0**	**Nickel**	0.5	**1.9**	
200.8	07/21/11	200.8	07/21/11	**7440-66-6**	**Zinc**	4	**6**	

U-Analyte undetected at given RL
RL-Reporting Limit

ANALYTICAL RESOURCES INCORPORATED

INORGANICS ANALYSIS DATA SHEET
DISSOLVED METALS

Sample ID: METHOD BLANK

Lab Sample ID: TE80MB
LIMS ID: 11-15472
Matrix: Water
Data Release Authorized:
Reported: 07/22/11

QC Report No: TE80-The Boeing Company
Project: NBF
025082.311
Date Sampled: NA
Date Received: NA

Prep Meth	Prep Date	Analysis Method	Analysis Date	CAS Number	Analyte	RL	µg/L	Q
200.8	07/21/11	200.8	07/21/11	7440-38-2	Arsenic	0.2	0.2	U
200.8	07/21/11	200.8	07/21/11	7440-43-9	Cadmium	0.1	0.1	U
200.8	07/21/11	200.8	07/21/11	7440-47-3	Chromium	0.5	0.5	U
200.8	07/21/11	200.8	07/21/11	7440-50-8	Copper	0.5	0.5	U
200.8	07/21/11	200.8	07/21/11	7439-92-1	Lead	0.1	0.1	U
7470A	07/21/11	7470A	07/21/11	7439-97-6	Mercury	0.1	0.1	U
200.8	07/21/11	200.8	07/21/11	7440-02-0	Nickel	0.5	0.5	U
200.8	07/21/11	200.8	07/21/11	7440-66-6	Zinc	4	4	U

U-Analyte undetected at given RL
RL-Reporting Limit

ANALYTICAL RESOURCES INCORPORATED

INORGANICS ANALYSIS DATA SHEET
DISSOLVED METALS

Sample ID: LAB CONTROL

Lab Sample ID: TE80LCS
LIMS ID: 11-15472
Matrix: Water
Data Release Authorized:
Reported: 07/22/11

QC Report No: TE80-The Boeing Company
Project: NBF
025082.311
Date Sampled: NA
Date Received: NA

BLANK SPIKE QUALITY CONTROL REPORT

Analyte	Analysis Method	Spike Found	Spike Added	% Recovery	Q
Arsenic	200.8	26.8	25.0	107%	
Cadmium	200.8	27.0	25.0	108%	
Chromium	200.8	26.9	25.0	108%	
Copper	200.8	29.2	25.0	117%	
Lead	200.8	27.8	25.0	111%	
Mercury	7470A	2.2	2.0	110%	
Nickel	200.8	28.4	25.0	114%	
Zinc	200.8	88	80	110%	

Reported in µg/L

N-Control limit not met
Control Limits: 80-120%

APPENDIX E

Sand Filter and Media Specifications

IL 5424-4A

NOTES:

1. FLOW RATE DESIGN: Max: 700gpm Nominal: 500gpm
2. MAXIMUM WORKING PRESSURE: 60 PSI
3. ELECTRICAL REQUIREMENTS:
   CONTROLLER 120V;
   SOLENOIDS 24VAC; FACTORY WIRED
4. AIR SUPPLY REQUIRED: 2 CFM @ 70 PSIG (MIN.).
5. MEDIA REQUIREMENT PER TANK: ¾" washed gravel; 700lbs/pod = 2,800lbs
   Garnet ; 700lbs/pod = 2,800lbs
   20/30 silica sand; 1600lbs/pod = 6400lbs
6. WEIGHTS: (APPROX.)

Equipment:	4,800 lbs
Media:	12,000 lbs
Operational:	23,400 lbs

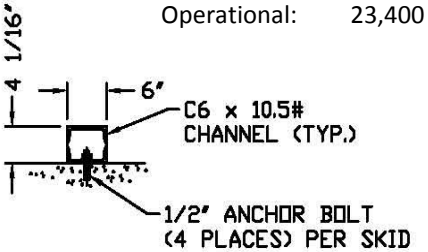

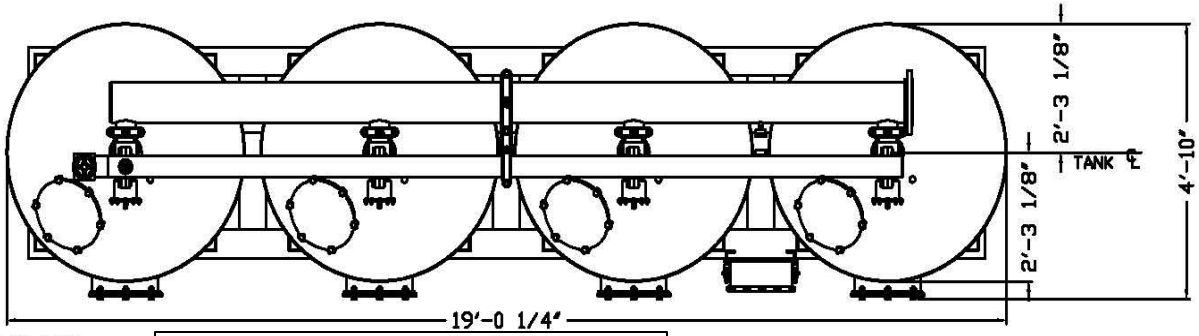

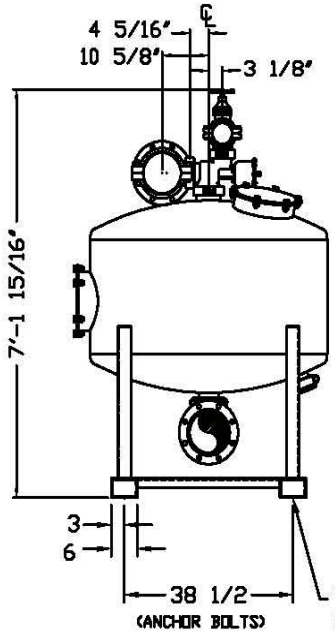

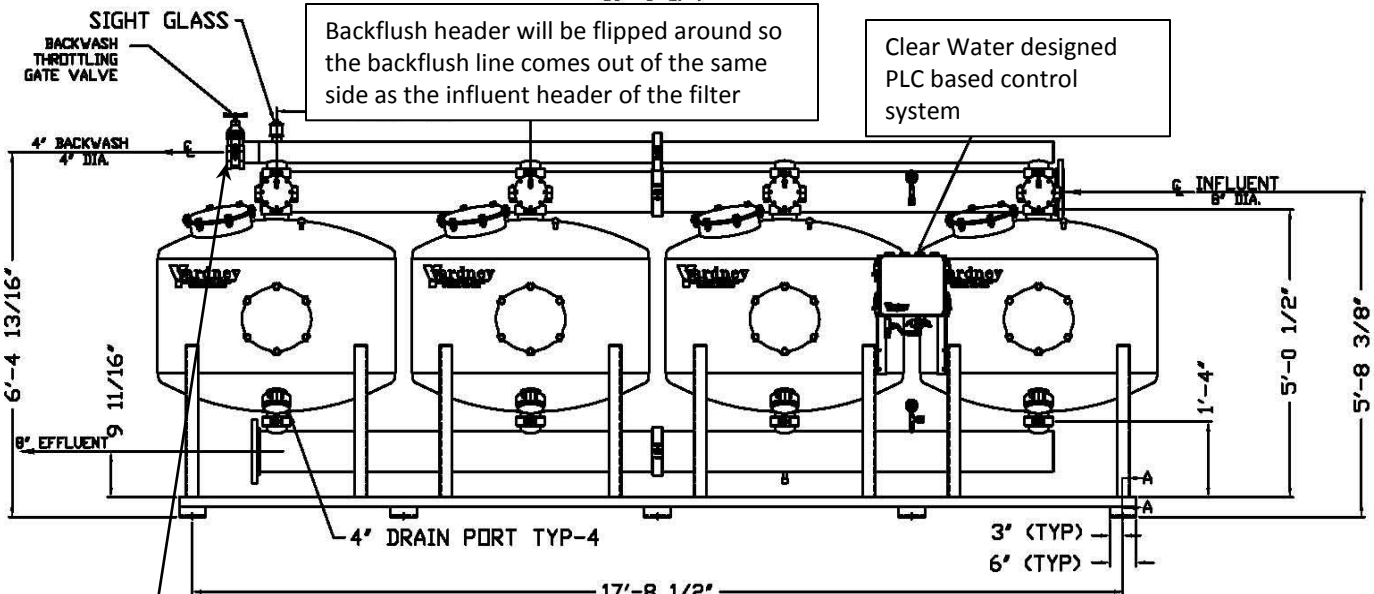

Backflush header will be flipped around so the backflush line comes out of the same side as the influent header of the filter

Clear Water designed PLC based control system

Backflush max flow rate; 239 gpm

THIS DRAWING, INCLUDING THE INFORMATION IT CONTAINS, IS CONFIDENTIAL, PROPRIETARY AND IS THE PROPERTY OF YARDNEY WATER MANAGEMENT, INC. IT IS SUBMITTED ONLY IN CONNECTION WITH THE TRANSACTION TO WHICH IT PERTAINS AND MUST NOT BE USED IN ANY OTHER MANNER DETRIMENTAL TO THE INTERESTS OF YARDNEY WATER MANAGEMENT. THE DRAWING IS NOT TO BE COPIED AND MUST BE RETURNED UPON REQUEST.
COPYRIGHT YARDNEY WATER MANAGEMENT SYSTEMS, 1993

SYM	REVISIONS	BY	DATE	APP
A	ADDED 4" DRAIN PORT; CHG PIE FROM 6" TO 8"	DTC	11-09	APP

Yardney WATER MANAGEMENT SYSTEMS RIVERSIDE, CALIFORNIA

APPROVALS DATE
DRAWN BY DTC 10-20-00
CHECKED BY
APPROVED BY
ENGINEERING REV. NONE
QUALITY REV.

IL 5424-4A
FILTER SYSTEM

SIZE – DRAWING NO. 9500542400 REV A
SCALE NONE DWG NO. SYSTEM\IL SHEET 1 OF 1

APPENDIX F

Documentation of Green Power Purchase

Seattle City Light **Green Up!**

EVENT *Renewable Energy Credit Purchase Agreement*

The *Green Up* Program is *Green-e* Certified. Product content and disclosure information is available at www.greenupseattle.org

Event Description: North Boeing Field Stormwater Treatment

Date(s) of Event: September 30 2011 through September 30 2012

Location of Event: North Boeing Field

Purchasing Organization: The Boeing Company

Address: PO Box 3703, M/C 1W-12, Seattle WA 98124-2207

Contact Name, Title: Carl Bach, EHS Remediation Project Manager

Phone, Email: 206-898-0438, carl.m.bach@boeing.com

Green Power Purchase Calculation:

a	Total electricity requirement for Event (kWh)	200,000
b	Percentage of requirement to be supplied by new green power (%)	100
c	Total Renewable Energy Credit requirement (a X b)	200,000
	Total Renewable Energy Credit Purchase Amount @ $0.015/kWh, (c X 0.015)	**$** 3,000

Payment Options (select one)

☐ Check enclosed for total purchase amount ☒ Invoice requested

Permission is granted to identify our organization and purchase in various communications, including but not limited to Seattle City Light webpages, presentations, and promotional materials.
☒ Yes ☐ No

Signatures: Buyer

Print Name Steven Tochko

Title EHS Remediation Manager

Date May 11, 2011

Seattle City Light

Print Name LESLIE BRAZEAU

Title DIVISION MARKETING MANAGER

Date 11/1/11

Mail or fax form to: Seattle City Light
Green Up Program
P.O. Box 34023
Seattle, WA 98124-4023
206-733-9866 fax

Please call 206-684-3954 for further assistance in completing this form.
v. 12-09

Energy CERTIFIED

City of Seattle

Seattle City Light
700 5th Avenue, Suite 3200
PO Box 34023
Seattle WA 98124-4023
206-684-3000

INVOICE

Invoice:	**L046776**
Invoice Date:	**11/04/2011**
Payment Terms:	**Net 30**
Due Date:	**12/04/2011**

Customer: **SCL116369** **Service Request / Contract # :** **AMOUNT DUE:** **$ 3,000.00** **USD**

THE BOEING CO
CARL BACH
PO BOX 3707 - M/C 1W-12
SEATTLE WA 98127-2207
United States

Amount Remitted

Please write invoice # on check and make checks payable to: ***City of Seattle, P.O. Box 34017, Seattle, Washington 98124-1017***

RETURN THIS PORTION WITH YOUR PAYMENT

City of Seattle

Seattle City Light
700 5th Avenue, Suite 3200
PO Box 34023
Seattle WA 98124-4023
206-684-3000

INVOICE

Invoice:	**L046776**
Invoice Date:	**11/04/2011**
Payment Terms:	**Net 30**
Due Date:	**12/04/2011**
SR / Contract #:	

Description	Amount
GREEN UP PURCHASE	3,000.00
Subtotal:	3,000.00
AMOUNT DUE:	**$ 3,000.00**

Questions on invoice content call service representative at: **(206) 684-3217**

Charge for greenup purchase of 200,000 kWh of green power (RECs) @ $.015/kWh.

For payment information call General Account **206-684-3419**

Past due balances may be subject to an interest charge of 1% per month,

biprntb.rpt

APPENDIX G

Electrical Permit Documentation

POST ON JOBSITE PRIOR TO BEGINNING OF WORK

Department of Labor and Industries

ELECTRICAL CONTRACTOR

ELECTRICAL WORK PERMIT # 2024393R

CONTRACTOR NAME
UNITY ELECTRIC LP

LICENSE NUMBER
UNITYEL919L9

INSTALLATION DESCRIPTION:
Water Filtration Trailer and associated pumps and filters

PURCHASER'S MAILING ADDRESS
3570 IRON COURT
SHASTA LAKE CA 96019
TELEPHONE NUMBER
5302753000

PREMISES OWNER'S NAME
The Boeing Company

ADDRESS OF INSPECTION
7370 E Marginal Way
North Boeing Field; Site is We
SEATTLE

SITE PHONE NUMBER
2067999618

POWER COMPANY
Seattle City Light - South

SERVICES TO INSPECT:

DESCRIPTION	QUANTITY	AMOUNT
- NEW SERVICE OR LARGEST FEEDER - 201 - 400 AMP	1	$218.90
CIRCUITS PER PANEL - NUMBER OF CIRCUITS ADDED/ALTERED	4	$72.70
- CIRCUITS PER PANEL - NUMBER OF CIRCUITS ADDED/ALTERED	12	$116.10
- IRRIGATION MACHINES, PUMP AND EQUIPTMENT - INSPECTED WITH SERVICE	4	$24.80

Inspection Fee: $432.50

The department will perform 1 inspection for permits where total fee paid on permit is less than $86.19. For more than 1 inspection, additional fees are required.

Additional Fees May Be Assessed Upon Field Inspection

This permit expires in one (1) year from date of last activity.

Applied:9/26/2011 **Expiration:9/26/2012**

	Date	Approved By		Date	Approved By
WALLS					
Insulation Only			SERVICE		
Cover			FEEDER		
CEILING					
Insulation Only			THERMOSTAT		
Cover			DITCH		

Inspection Date	Area, Building or Equipment Inspected	Action Taken	Electrical Inspector
10/12/11	Od Cir Gov Pumps		CF
	Od Cutsize		
K	Bonding 480V / Bushing		

Electrical Permit

Permit			
Permit Number	2000794E	**Status**	Active
Applied	7/19/2011	**Fee Due**	$0.00
Total Corrections			

Applicant		Inspection Site	
Permit Holder	PACIFIC CREST ELECTRIC INC	**Company Name**	Boeing Co.
Name		**Owner Name**	
Address	PO BOX 1551	**Address**	Boeing Field
City	SNOHOMISH	**City**	SEATTLE
Special Instructions			

Return to Main Menu

Requests

Created	Requested	Reason	Status
10/22/2011	10/23/2011		Request Taken
10/20/2011	10/21/2011		Request Taken
9/14/2011	9/15/2011		Request Taken
8/8/2011	8/10/2011	CALLED IN TO CANCEL INSPECTION REQUEST	Cancelled
8/3/2011	8/4/2011		Request Taken
7/29/2011	8/1/2011		Request Taken
7/28/2011	7/29/2011		Request Taken
7/19/2011	7/20/2011		Request Taken

Inspections

Inspected	Inspector	Corrections Written	Corrections Completed	Comments
10/24/2011	FONTANA, CHRISTOPHER	0	0	
10/24/2011	FONTANA, CHRISTOPHER	0	0	
9/29/2011	FONTANA, CHRISTOPHER	0	0	
9/15/2011	FONTANA, CHRISTOPHER	0	0	
8/4/2011	FONTANA, CHRISTOPHER	0	0	
8/3/2011	FONTANA, CHRISTOPHER	0	0	
7/29/2011	HOSEA, JOHN	0	0	
7/20/2011	HINGTGEN, TIM	0	0	

Details

Inspected	Inspection	Result	Comment
10/24/2011	Feeder,New,Exposed,480V,>600A	AC - Approved Complete	feeders final/transformer
10/24/2011	Service,New,Underground,480V,401-600A	AP - Approved Partial	service
9/29/2011	Feeder,New,Exposed,480V,>600A	AP - Approved Partial	progress service/listing transformer/permit mv terminations/hye pot test
9/15/2011	Cover,Conduit Only,Underground	AC - Approved Complete	cr water treatment area
8/4/2011	Cover,Conduit Only,Underground	AP - Approved Partial	west side
8/3/2011	Cover,Conduit Only,Underground	AP - Approved Partial	cvr east side
7/29/2011	Cover,Conduit Only,Underground	AC - Approved Complete	north of Myrtle street uo 240'
7/20/2011	Cover,Conduit Only,Underground	AP - Approved Partial	Markof S. of Myrtle and road crossing 2" PVC

APPENDIX H

Operation and Maintenance Manual for Long-Term Stormwater Treatment

Operation and Maintenance Manual
Long-Term Stormwater Treatment Facility
North Boeing Field
Seattle, Washington

March 23, 2012

Prepared for

The Boeing Company
Seattle, Washington

LANDAU ASSOCIATES
130 2nd Avenue South
Edmonds, WA 98020
(425) 778-0907

TABLE OF CONTENTS

		Page
1.0	INTRODUCTION	1-1
1.1	SITE LOCATION	1-1
1.2	TREATMENT SYSTEM DESCRIPTION	1-1
1.2.1	Treatment System Design Basis	1-2
1.2.2	Treatment Summary	1-3
1.2.3	Treatment System Components	1-3
2.0	TREATMENT SYSTEM OPERATION, MAINTENANCE, AND MONITORING	2-1
2.1	OPERATION AND MAINTENANCE	2-1
2.1.1	System Startup	2-2
2.1.2	System Shutdown	2-2
2.1.3	Freeze Protection	2-3
2.1.4	Routine Site and System Inspection	2-3
2.1.5	Field Documentation	2-4
2.1.6	Sensor Calibration and Care	2-5
2.1.7	Bench Scale Treatability Test	2-7
2.1.8	pH Adjustment	2-8
2.1.9	Chitosan Metering Pump Calibration	2-9
2.1.10	Backflush	2-11
2.1.11	Monitoring and Removal of Accumulated Solids	2-12
2.2	SYSTEM MONITORING	2-13
2.2.1	Chitosan Monitoring	2-13
2.2.2	Residual Chitosan Test	2-16
2.2.3	Remote Alert Messaging System	2-18
2.2.4	Treatment Bypass	2-18
2.2.5	Spill Prevention and Contingency	2-19
3.0	PERFORMANCE MONITORING	3-1
3.1	SAMPLING OBJECTIVES AND LOCATIONS	3-1
3.2	DATA QUALITY OBJECTIVES AND REPORTING	3-2
4.0	USE OF REPORT	4-1
5.0	REFERENCES	5-1

TABLES

Table	Title
1	Summary of Monitoring Tasks, Chitosan-Enhanced Sand Filtration System

ATTACHMENTS

Attachment	Title
1	Clear Water Compliance Services Operation and Maintenance Manual
2	Chitosan-Enhanced Sand Filtration Operation Forms

1.0 INTRODUCTION

This operation and maintenance (O&M) manual presents operation, maintenance, monitoring, and testing procedures related to the long-term stormwater treatment (LTST) system at North Boeing Field (NBF). The LTST system is designed to remove polychlorinated biphenyls (PCBs) from stormwater in the storm drain system at NBF. On September 29, 2010, Boeing entered into an Administrative Settlement Agreement and Order on Consent for Removal Action (ASAOC) with the U.S. Environmental Protection Agency (EPA). This O&M manual is a required deliverable under the ASAOC, which requires that Boeing address the discharge of PCBs to the Slip 4 Early Action Area (EAA) through short-term and long-term stormwater treatment removal actions. Most of the PCBs discharging from NBF to Slip 4 via the NBF storm drain system were previously identified to be from the North Lateral portion of the storm drain (SAIC 2010). Under the ASAOC, Boeing installed the short-term stormwater treatment (STST) facility to remove PCBs from a large portion of the North Lateral portion of the NBF storm drain system prior to discharge to Slip 4 (Landau Associates 2010, 2011). The STST facility consisted of a chitosan-enhanced sand filtration (CESF) system that treats stormwater flow from a large portion of the North Lateral storm drain line at NBF. That system became operational on September 15, 2010. The STST facility demonstrated that CESF was very effective at reducing the mass of TSS and PCBs in stormwater. Therefore, the LTST facility was designed around a similar CESF system, although significantly larger in footprint and capacity. It preferentially treats stormwater flow from a portion of the North Lateral, but also treats all base flow and a portion of all stormflow that drains to King County Lift Station LS431 at the NBF site. The STST facility was operated until the LTST facility was installed and operating, and then it was decommissioned in November 2011. Operation of the LTST facility officially began on October 28, 2011.

1.1 SITE LOCATION

NBF is located east of East Marginal Way South, adjacent to the King County International Airport (KCIA) and the City of Seattle Georgetown Steam Plant. The approximate street address is 7370 East Marginal Way South, Seattle, Washington. NBF is approximately 150 ft from the head of Slip 4, which is an EAA at approximately River Mile 2.8 on the Duwamish Waterway within the Lower Duwamish Waterway Superfund Site.

1.2 TREATMENT SYSTEM DESCRIPTION

Because PCB contamination is predominantly bound to suspended particles in the stormwater, removal of these particles is the most effective method of PCB removal. For stormwater CESF treatment,

a liquid solution of chitosan acetate is typically dosed into the stormwater prior to a filtration step (e.g., sand filtration). Chitosan is a biopolymer that can be extracted from shrimp and crab shells. The chitosan agglomerates suspended solids, including small colloidal particles that are otherwise resistant to settling and filtration. The larger size and mass of the agglomerated particles facilitate efficient settling and filtration. CESF systems can effectively remove suspended solids, often achieving turbidity levels below 1 nephelometric turbidity unit (NTU) with a dosage of chitosan acetate of less than 1 part per million (ppm).

1.2.1 TREATMENT SYSTEM DESIGN BASIS

As was similarly described in the 100% Design Report: Long-Term Stormwater Treatment (Landau Associates 2011), the following items describe the basis of LTST system design.

- The LTST system was constructed adjacent to and south of King County Lift Station LS431. The system treats all dry weather base flows from the Lift Station Inlet Vault (LSIV) and MH130A (North Lateral) and preferentially treats wet weather storm flows from MH130A and, as capacity allows, additional flows from the LSIV. The treatment system was designed to capture and treat approximately 91 percent of onsite storm flows to MH130A (12.8 acres) and 100 percent of onsite and offsite dry weather base flows to the LSIV (approximately 106 acres onsite plus approximately 191 acres offsite). Additional treatment of low storm flows at the LSIV is provided as capacity is available. The system operates at full capacity (1,500 gpm) whenever sufficient stormwater is present.
- The submersible pump at MH130A (initially used for the STST System) is connected to a new forcemain and routes base and wet weather storm flows from MH130A directly to the LTST system. When the LTST system has capacity beyond that which is required to treat the flows from MH130A, additional storm flows from the LSIV will be pumped to the system.
- Offsite stormwater that was part of the North Lateral (41.1 acres of King County drainage) was rerouted at a storm drain manhole (54-inch diameter) that is located 16 feet upstream of MH178. The rerouted line goes through NBF and terminates at SDMH421, which is upstream of the LSIV. The reroute minimizes overflow bypass at MH130A and allows preferential capture and treatment of onsite North Lateral storm flows. The reroute also allows some treatment of offsite North Lateral flows (as well as other laterals) at the LSIV when capacity allows.
- Dry weather base flows from onsite and offsite laterals discharging to the LSIV are pumped to the LTST system.
- All treated flows from the LTST system are discharged to the Lift Station Outfall Vault, downstream of the LTST intake.
- When stormwater flows exceed the LTST system capacity and raise the level in the LSIV to the first King County "pump on" setpoint, the existing King County pump(s) will activate and pump water into the Lift Station Outfall Vault, bypassing the LTST system.

1.2.2 TREATMENT SUMMARY

The following list provides a brief summary of the primary LTST system operations:

1. Stormwater is transferred from MH130A in the North Lateral, and from nearby King County Lift Station Inlet Vault (LSIV) to the treatment system location (see Section 1.2.1 for capture / treatment design basis)
2. Large particles are settled-out in the Inlet Weir Tank
3. Stormwater is pumped through the control station for introduction of chitosan acetate
4. Sedimentation: Chitosan-enhanced sedimentation in the Storage Tanks
5. Stormwater is pumped again through the control station for an additional dose of chitosan acetate
6. Filtration: Chitosan-enhanced sand filtration in three multi-vessel sand filter units
7. Water quality testing: Turbidity monitoring of treated stormwater
8. Water meeting criteria (turbidity < 5 NTU) continues to discharge at Slip 4
9. Water not meeting criteria (turbidity ≥ 5 NTU) is recirculated back to the Storage Tanks for additional settling and CESF.

1.2.3 TREATMENT SYSTEM COMPONENTS

A brief description of the process equipment used at the LTST system is provided in the list below:

Stormwater Collection Pumps: Two pumps will transfer stormwater to the LTST system.

1. A 10 horsepower (hp) submersible electric pump (P-101) is installed at MH130A. This pump will operate at approximately 500 gallons per minute (gpm). The pump is additionally controlled by float activation with PUMP ON at approximate elevation 4.45 ft and PUMP OFF at approximate elevation 3.3 ft. A weir just downstream of the pump, in MH130B, is at approximate elevation 5.23 ft.
2. A 21.5 hp submersible electric pump (P-201) is installed at the LSIV. This pump will be operated in conjunction with P-101 to achieve a maximum combined flow rate of 1,500 gpm. Pump P-201 is capable of operating between pumping flow rates of 750 gpm and 1,500 gpm. The actual flow rate from P-201 will be adjusted by variable frequency drive (VFD) motor, and controlled dependent on the flow rate from MH130A. The pump is additionally controlled by float activation with PUMP ON at approximate elevation –0.51 ft and PUMP OFF at approximate elevation –2.80 ft. Operation of this pump is intended to limit the rise of water in the LSIV so that the King County pumps will not be activated unless the LTST system is treating its design capacity of 1,500 gpm.

Inlet Weir Tank: All stormwater routed to the LTST system enters the 17,800-gallon Inlet Weir Tank, constructed with baffles in an under-over configuration. This tank facilitates settling of large particles and also provides some retention capacity for floating oil prior to chitosan dosing. The tank is designed to remove particles and provide protection for downstream process equipment. Pump P-301 transfers

stormwater from the Inlet Weir Tank and is capable of passing solids up to ⅞-inch diameter. Flow rates through this tank could reach a maximum of 1,739 gpm, which includes a combined total of 1,500 gpm stormwater from MH130A and the nearby LSIV, and 239 gpm from the sand-filter backflush operation.

Transfer Pumps: Four pumps will transfer fluids within the LTST facility.

1. A 40-hp centrifugal pump (P-301) will transfer fluids from the Inlet Weir Tank, through the monitoring and control unit for monitoring and chitosan injection, and then to the Storage Tanks for settling. The pump is capable of operating at pumping flow rates between 500 and 1,650 gpm adjusted by VFD. Multiple flow rate setpoints have been established based on the height of water in the Inlet Weir Tank, to avoid over-cycling the pump by increasing pumping flow rates when levels are high and reducing pumping flow rates when tank levels are low.
2. Three individual 20-hp centrifugal pumps (P-310A, P-310B, and P-310C, one for each sand filtration unit) will transfer stormwater from the Storage Tanks, through the monitoring and control unit for monitoring and additional chitosan injection, through a sand filtration unit, through the monitoring and control unit once again, and either toward discharge at Slip 4 or recirculated back to the Storage Tanks depending upon monitoring results.

Chitosan Injection System: The chitosan injection system consists of three chitosan storage tanks (200-gallons each, located inside the control trailer), a variable speed chemical metering pump, graduated cylinders for calibration, inline static mixers, and assorted tubing and control valves. Chitosan dosing occurs within the control trailer for two separate stages of the treatment train. Stormwater is dosed prior to entering the Storage Tanks, and again prior to entering the sand filtration unit.

Storage Tanks: For the LTST system, three 21,000-gallon steel aboveground storage tanks (ASTs) facilitate sedimentation prior to sand filtration. Piping influent to each of the tanks is manifolded together so that the tanks will share an equal amount of flow-through, and maintain similar levels of water. Flow through each of these tanks will be approximately one-third of the flow through the Inlet Weir Tank.

Sand Filtration Units: Three multi-vessel sand filter units will provide the primary treatment mechanism for the CESF unit. Chitosan-agglomerated particles that are suspended in stormwater passing through the filter beds are held in the sand matrix. Each sand filter unit has four 54-inch-diameter steel sand filter vessels (also referred to as a 54x4 system by the manufacturer, Yardney) with automatic backflush capabilities. As particulates accumulate in the sand media, there is an increase in pressure differential across the sand bed. In order to rejuvenate the filter media in a given vessel, the bed is temporarily fluidized as water is pumped up through the sand from below. The entrapped particles are freed from the sand matrix and flow out of the top of the filter vessel. Water for backflushing is taken directly from the

filtered effluent from the other vessels in the unit, so no potable water connection is necessary. Backflush water is conveyed to the backflush settling tank.

Backflush Controls: Backflushing of the sand filters is controlled both by a differential pressure setpoint (pressure differential increases as the filter accumulates solids) and by an operational timer (to ensure a minimum backflushing frequency). As of the date of this report, the current differential pressure setpoint to trigger backflushing is 8 pounds per square inch (psi), and the operational time that will trigger backflushing is 4 hours. The minimum backflush cycle time may be adjusted up to 8 hours, based on performance at system startup. Backflushing will occur if either of these setpoints is triggered. These setpoints will be adjusted during operation to optimize the system. Newer sand filter media does not produce as high a pressure differential, and the pressure setpoint will likely be increased as the media gets older. The four sand filter vessels in a unit are backflushed sequentially. Backflushing will occur at only one sand filter vessel and one multi-vessel unit at a time to minimize flow through the Backflush Settling Tank and to prevent overloading the Inlet Weir Tank.

Backflush Settling Tank: Turbid backflush water is routed to a17,800-gallon weir settling tank (Backflush Settling Tank) to allow sedimentation of particles removed from the sand filters during backflushing. Because backflushing is limited to one sand filter vessel and one multi-vessel unit at a time, flow through the Backflush Settling Tank will be limited to approximately 239 gpm. Stormwater from the Backflush Settling Tank will gravity-flow through an overflow port and into the Inlet Weir Tanks.

Programmable Logic Controller: Three Programmable Logic Controllers (PLCs) are used to monitor and operate the automatic features of the treatment system. The PLCs collect and store system operational data including pressure, flow rate, current, water levels in the system tanks, and temperature, and will initiate or control operational units based on programmed setpoints for these parameters. The lead PLC controls the LSIV pump (P-201) based on water level in the LSIV; records the flow data from the LSIV and MH130A flow meters; controls the pretreatment pump (P-301) VFD based on water level in the inlet weir tank; controls the first sand filter system pump (P-310A) based on storage tank water level; and controls backflushing of the first sandfilter. A second PLC controls the second sand filter pump (P-310B) and backflushing of the second sand filter system. A third PLC controls the third sand filter pump (P-310C) and backflushing of the third sand filter system.

Interconnecting Piping: Piping within the LTST system is primarily Schedule 80 polyvinyl chloride (PVC) piping with some polyethylene tubing for sampling conveyance (i.e., for the turbidity and pH meters). System piping is above ground in the treatment area, which is outside of vehicle and pedestrian traffic areas.

Pipe Fittings: Various pipe connection fittings are used throughout the system. Most fittings are Schedule 80 PVC to PVC connections, made with couplers and glue. Ductile-iron to PVC or high-density polyethylene (HDPE) to PVC connections are made with bolted flanges with gaskets. To protect the piping network from damage due to differential movement of process equipment, flexible flanged connections (designed to accommodate shifting and relieve stress at pipe joints) were used in select locations. Around flow meters or inline sampling filters, unions or flanges will be used to facilitate equipment servicing.

Effluent Water Quality Monitoring Equipment: The CESF system continuously self-monitors pH and turbidity of the treated effluent water. The monitoring system includes a pH meter, turbidimeters, flow meters, an instrument display panel, and sample collection lines. Data collected are recorded by the PLC.

Manual Valves: Manual valves are available to be used by the operator to control flow rates and internal system pressures, in the event that VFD pump control is not adequate to maintain system design parameters. There are manual valves located on the effluent side of the sand filter units. There is also a valve on the final CESF system discharge line that can be throttled as necessary to allow an adequate flow rate through the effluent bag filter (a component of performance monitoring).

Automatic Valves: Automated pneumatic valves are located on the effluent lines in the monitoring and control unit. These valves divert flow between the discharge and recirculation lines based on the real-time data collected with the effluent water quality monitoring equipment. If treated stormwater does not yet meet setpoint tolerances for pH and turbidity, the water is automatically routed back to the Storage Tanks for another pass through the treatment system.

Laboratory Equipment: Components for bench scale testing and monitoring include hand-held meters, beakers, droppers, filters, standard solutions, chemicals, monitoring forms, and other miscellaneous items.

Air Compressor: The air compressor provides pressurized air to operate pneumatic control valves on the CESF effluent lines and backflush valves on the sand filter units.

2.0 TREATMENT SYSTEM OPERATION, MAINTENANCE, AND MONITORING

This section describes the operation, maintenance, and monitoring of the LTST system. Performance monitoring of the system and at the point of compliance to characterize and document site-wide stormwater discharge is discussed in Section 3.0 and in the Sampling and Analysis Plan (SAP), which was included as Appendix C in the *100% Design Report, Long-Term Stormwater Treatment* (Landau Associates 2011). Revisions are being made to the SAP and the final version will be submitted to EPA by December 28, 2011.

2.1 OPERATION AND MAINTENANCE

Operations and maintenance guidelines are provided in the Clear Water Compliance Services Operations and Maintenance Manual, provided as Attachment 1. That manual was originally written for temporary CESF systems installed at construction sites, but was revised to be applicable to the LTST system. The more typical systems used at construction sites generally run during regular business hours, can be constantly monitored, and include a retention structure that can detain stormwater during hours of system shutdown.

CESF systems are most frequently operated at construction sites where very turbid water (on the order of thousands of NTUs) is being treated, are operated intermittently, and are actively operated by trained personnel. Operation at NBF will differ in that treatment will take place 24 hours a day to treat base flow and storm flow (although this may use only one of the three sand filters, allowing equipment maintenance to occur on a non-rush basis during dry weather), treating stormwater with influent turbidity typically less than 25 NTU. Therefore, once the system is determined to be operating properly, operation and monitoring will be automated, leaving only weekly calibration and a routine inspection to be conducted by trained CESF operators. A remote messaging alarm system will alert personnel if additional unscheduled/immediate maintenance is needed.

Monitoring of the CESF system during operation will include residual chitosan testing, routine inspections, and sensor and chitosan metering pump calibrations. Once the CESF system is optimized and operating smoothly, the chitosan dosing rate is anticipated to remain constant, and a twice-monthly residual chitosan testing frequency is anticipated to be adequate to verify that no chitosan is being discharged to Slip 4. The monitoring frequency is also listed in the SAP (Landau Associates 2011); this residual chitosan monitoring is a slight decrease in frequency from what was specified for the STST system, as residual chitosan was never detected in any samples of effluent from the STST facility, and there is extremely low probability of chitosan being able to pass through the sand filters.

Breakthrough of PCBs through the sand filter media at very low levels was seen at the STST system after 6 months of operation and after the four-vessel sand filter unit had filtered more than 20 million gallons of stormwater. Therefore, special attention will be paid to each of the three sand filter units as they approach or pass the point of having filtered 20 million gallons. Sand filters will also lose some of their sand during the backflush cycles, so it is planned to open up the sand filters after every 10 million gallons filtered to see if replacement sand is necessary to bring the filter media bed back up to its full height.

Table 1 summarizes the monitoring tasks associated with the treatment system and their frequency. The following sections describe startup procedures, monitoring procedures, and frequency of monitoring for the LTST system.

2.1.1 SYSTEM STARTUP

The typical operational sequences for starting and stopping the CESF system are given in Section 3.2 of the *Operation and Maintenance Manual for Chitosan-Enhanced Sand Filtration System* provided by Clear Water Compliance Services, provided as Attachment 1 to this manual for reference. These procedures are written assuming the system is shut down at the end of every shift, which does not apply to the NBF LTST system. Since the NBF system will be automated, these procedures will be required only on initial startup, and after an unexpected shutdown.

Treatment technicians will remain onsite during startup to monitor overall system performance. System pressure and inline water quality results are to be recorded manually every 15 minutes in the appropriate field log, until the system has stabilized. When unmanned, the control system will automatically record water quality data every 15 minutes.

Residual chitosan tests are to be performed twice during the first 2 hours of system startup, then daily for the first week of operation, and as needed afterwards, but no less than twice monthly for the duration of system operation. If chitosan is detected in the system effluent, testing will revert to daily until 1 week of negative results is achieved. Chitosan dosage pump calibrations are to be performed within the first 4 hours during initial startup, and as needed afterwards, but no less than once per week for the duration of system operation.

2.1.2 SYSTEM SHUTDOWN

The NBF system will not be shut down regularly during its operational lifetime, but only for troubleshooting due to an unexpected problem. The shutdown procedures can be found in Clear Water's Manual (Attachment 1).

2.1.3 FREEZE PROTECTION

During cold weather conditions, certain precautions need to be taken to protect against freeze events. A freeze event could result in system component damage and/or operations loss. Standard operational procedures for the system will be to provide enough flow through system equipment and pipes to protect against freezing. During extended freeze events, the system will instead be drained. All freeze protection procedures can be found in Clear Water's Manual (Attachment 1).

2.1.4 ROUTINE SITE AND SYSTEM INSPECTION

Following the startup and frequent inspections during the first few weeks of CESF system operation, routine inspections will be conducted on a weekly basis during operation of the system. A preliminary assessment will be made of the overall integrity of a job site upon arrival. Conditions may have changed at the site in such a way that affects treatment operations. The following procedures have been adapted from Clear Water's Manual (Attachment 1):

Security: All Clear Water treatment containers are kept locked when Clear Water or other trained personnel are not present. Keys for all treatment containers will be provided by the project manager. Verify that the system is secure.

MH130A and MH130B: Check the structures and/or the MH130A flow meter for signs of proper system operation and that the system is pumping properly out of MH130A and discharging properly into the Inlet Weir Tank. This check will be done primarily by recording the MH130A flow meter totalizer value during each O&M inspection, comparing the volume reading to the previous reading, and assessing whether the totalizer value has advanced as would be expected given the amount of rainfall in the preceding period. Stormwater should not be overtopping the weir in MH130B except during significant precipitation events. If the monthly calculation of bypass at MH130B indicates that more bypass occurred than would be expected given the precipitation amounts, then the float switches in MH130A will be checked for proper operation and activation levels.

Chitosan Injection System Valves: Ensure that the chitosan storage tank valve is open for proper chitosan injection.

Sand Filter Bleeder and Drain Valves: Ensure the small bleeder valves at the top of the sand filter vessels and drain valves are closed.

Sample Port Valves: Ensure the water quality sampling valves are open.

Air Compressor: Make sure the compressor breaker switch is on. Check to make sure the drain valve is closed.

Pipe Integrity: Check to see if all the aboveground conveyance lines are in working order. Surface pipes at industrial sites are vulnerable to vehicle impact and environmental wear. Small stress cracks can become significant safety or operational problems when operating under pressure.

Chitosan Volume: Assess the quantity of chitosan in the storage tanks. Site project managers need to be kept aware of chitosan levels so they can schedule a timely resupply.

System Operating Pressures: Check pressures at all pressure gauges to ensure normal operation. If pressures are out of range, evaluate the status of downstream valves and filters and rectify the situation causing high pressures. After valve adjustments, filter cleaning, or filter backflush, re-check operational pressures to ensure the system is functioning within design range.

2.1.5 FIELD DOCUMENTATION

A series of triplicate forms are provided in all the system containers for Clear Water technicians to log the results of operational activities. All the forms have a field to record the project title, project number, project location, and date in the header block. System operators should print and sign their name at the bottom of the sheet. If multiple operators are working in a single system monitoring and control unit, the forms should be signed by the most senior operator. All fields on each form are to be completed. Fields that do not apply to a particular site or system should be completed with the letters NA (not applicable). Blank copies of each of the following forms are provided in Attachment 2 of this manual.

CESF – Daily System Operations and Maintenance: This is the primary form used by Clear Water operators. The pre- and post-treatment flow totalizer numbers, as well as the total volume treated and the total volume discharged, are recorded here. This form is intended to summarize system activities and productivity. Regulatory agencies require an evaluation of system performance and water quality monitoring for all discharge periods. Other relevant operational information should be recorded here for reference by Clear Water staff.

Bench Scale Treatability Form: This form is used to record water quality data and the observed results associated with the startup bench scale treatability test. The procedure for this test is described in Section 2.1.7. Visual observations shall be recorded in conjunction with each dose adjustment. Additionally, a general assessment of the entire test shall be recorded upon completion of the test.

Chemical Metering Pump Calibration Form: This form is used to record the chemical delivery pump rate and calculate the treatment system chitosan dose rate. The chitosan calibration procedure is described in Section 2.1.9.

Residual Chitosan Test Form: This form is used to record the results and sample data associated with residual chitosan tests. The procedure for this test is described in Section 2.2.2. Operating conditions that necessitate elevated chitosan dose rates may increase the residual chitosan testing requirements.

Manual Data Collection Form: This form is used to record inline water quality data (pH, turbidity) as well as system pressure. Influent and effluent data will be recorded for each of these categories. These data will be recorded every 15 minutes when checking the system, until stabilization of parameters is observed. These data should be read from the "water" page of the PLC. In addition, meter confidence checks will be recorded on this form.

Instrument Calibration Report Form: Clear Water's CESF systems have multiple water quality meters that need to be calibrated regularly. There are separate forms associated with inline pH meters, inline turbidity meters, and all the hand-held meters. There are fields to record the strength of the calibration standard used, the initial meter reading, and the calibrated meter reading.

2.1.6 SENSOR CALIBRATION AND CARE

The system's internal water quality sensors, as well as the hand-held sensors, will be calibrated twice monthly, following manufacturer's recommendations. Calibration information for each instrument will be logged on the accompanying calibration form. Regular calibration of the sensors will help ensure accuracy of water quality monitoring.

Confidence Checks must be performed to confirm sensor accuracy. Hand-held meter readings will be checked against inline readings during the residual chitosan tests. Confidence Checks are to be recorded on the Manual Data Collection Form.

The manufacturer-provided calibration procedures for each meter are included in Clear Water's Manual (Attachment 1). Additionally, the entire owner's manuals for the hand-held meters are included

in the monitoring and control unit. Calibration standards for the inline and hand-held turbidimeters are included in the corresponding meter kits. Calibration standards for the inline and hand-held pH meters, and for the conductivity meter, are supplied in the monitoring and control unit.

Hand-Held pH Meter: It is important to properly care for the pH meter probe. Irreparable damage to the probe commonly occurs due to simple neglect. The pH probe storage solution and cleaning solution is included in the monitoring and control unit. Use the cleaning solution periodically or whenever its use appears necessary. Store the probe in probe storage solution whenever the meter is not in use. The tip of the probe should never be allowed to dry out. The probe will be rinsed with water between insertions into different standards or samples to avoid contamination.

Hand-Held Turbidimeter: The included cuvettes for calibration standards and sample measurements need to be handled carefully. The readability of the glass cuvettes will be compromised if they get scratched. Avoid touching the cuvettes with your bare fingers and carefully remove smudges with laboratory wipes. The cuvettes can become stained if dirty samples are allowed to sit inside for an extended period. Always promptly empty samples and rinse the cuvettes with distilled water after use. Clean stained cuvettes with a gentle solvent. Make sure the outside of the cuvettes are dry before inserting them into the meters. Introducing moisture into the meters will compromise the sample reading and damage the meter. Record the Initial Reading before calibrating the meter. Record the Final Reading after calibrating the meter.

Inline pH Meter: Follow the probe care and usage instructions previously stated for the hand-held meter. Calibrate the pH meter using the EASYCAL method identified by the manufacturer. Choose a calibration slope appropriate to the stormwater that will be treated (7 to 4 if water is under a pH of 7; 7 to 10 if water is over a pH of 7). Finish the calibration procedure by measuring the calibrated reading of the pH 7 buffer. This will ensure the meter is reading within the range of the stormwater being treated. Record the Initial Reading when the meter is in calibration mode and record the final reading when the meter is back in normal operation mode.

Carefully remove and replace probe from probe seat. Probe-amplifier lock points can be damaged if not removed gently. Cross threading is a common problem with the pH seats. Be aware of the O-ring gasket falling out when removing probe from pH seat.

Inline Turbidimeter: Follow the cuvette care and usage instructions previously stated for the hand-held meter. Be aware of condensation on the flow-through cuvette. Cold water in the cuvette and the warm

air inside the treatment container will often promote condensation, which would need to be wiped off before returning the cuvette to the measurement chamber. Record the Initial Reading and Final Reading when in calibration mode.

In addition, because of observed scaling from iron and/or iron bacteria, a small automated cleaning system has been put in place for the inline turbidimeters. This cleaning system is necessary to avoid false high turbidity readings and unnecessary recirculation of stormwater for repeated CESF treatment. When one of the three sand filter systems ends its operational cycle, a small dose of a cleaning compound is added to the turbidimeter cuvette in order to prevent iron scaling of the glass wall of the cuvette. This dosage of cleaner is only a few milliliters, and water from the cuvettes is automatically pumped back into the stormwater inlet weir tank for treatment by the system.

2.1.7 BENCH SCALE TREATABILITY TEST

After the water quality sensors have been calibrated, the system operator can perform the bench scale treatability test at system startup. This test was conducted during the initial system startup testing and was used to assess the conditions of the stormwater to be treated and to determine the proper chitosan dosage rate. The chitosan dose rate was initially set at 0.7 ppm, later adjusted to 0.6 ppm, and currently set at 0.5 ppm based on additional testing results. Throughout system operation, the dose may be adjusted to avoid excessive use of chitosan and minimize costs while still achieving treatment system goals. As a general set of guidelines, the dose rate should be set at the lowest level while still maintaining effluent turbidity of ≤ 2 NTU, and undetectable effluent concentrations of TSS and PCBs (at their respective reporting limits of 1 mg/L and 0.010 µg/L).

Unlike a construction site, the water quality conditions of the stormwater at NBF are relatively constant. Therefore, future bench scale treatability testing will be conducted only if there is reason to believe the influent stormwater quality has changed significantly. The following description of the treatability test has been adapted from Clear Water's Manual (Attachment 1).

The bench scale treatability test lets the operator know of possible treatment problems prior to introducing water to the CESF system. Several factors can influence treatability, including concentration of suspended solids, pH, detergents, the presence of soil tackifiers such as polyacrylamides (PAMs) and guar in the runoff.

The samples procured for this test should be representative of system influent, and should not contain sediment that would settle naturally (sand and rocks). Multiple tests may be required since the LTST system will be treating stormwater from both MH130A and OWS421.

Required Equipment: In order to perform this testing sequence, the following items are required:

- Properly calibrated pH meter
- Properly calibrated turbidimeter
- Properly calibrated conductivity meter
- One 1-liter sample glass beaker
- One 1-liter sample plastic beaker
- Chitosan acetate
- Pipette
- Stir rod.

Perform the Screening Test:

1. Retrieve a 1-liter grab sample of stormwater from the influent with a plastic beaker.
2. Transfer the sample into a 1-liter glass beaker.
3. Measure and record initial pH, conductivity, and turbidity of sample in the appropriate field log.
4. If the sample does not have a pH reading conducive to treatment (6.5 to 8.0), carefully adjust the pH of the sample by adding small amounts of sodium bicarbonate or acetic acid until the sample reads a pH close to 7. Record the adjusted pH and note treatment method.
5. Add one drop of a known quantity chitosan to the sample.
6. Stir sample vigorously for 1 minute to assure dissolution.
7. Allow sufficient settling time and observe solution for the formation of small floc particles called pinfloc.
8. Grab a sample from the surface of the sample jar and record the turbidity.
9. Repeat steps 5 through 8, recording observations and dosage related to the appearance of floc and settling.

Interpreting the Screening Test: Visible sediment settling indicates that chitosan has coagulated the particles. The beaker may contain clear water on top, or be slightly cloudy, and there should be variation in coagulation amount between dose rates. The object of this test is not to produce completely clean, clear water in the beaker. Rather, it is to determine the most suitable dose rate for CESF treatment. For planning purposes, the smallest effective dosage will be used as the initial dose rate. If there is no change in sample appearance (i.e., reduction in turbidity) between doses, it is assumed that there are treatability problems. This is rare, and may occur for different reasons that need to be investigated.

2.1.8 pH ADJUSTMENT

Adjustment of pH may be required based on some site conditions for regulatory and operational purposes. Many aquatic species are very sensitive to pH alterations and even a small alteration can have a

significant effect on a natural system. Information on pH adjustment, based on observed NBF site conditions and adapted from Clear Water's Manual (Attachment 1), is provided below for reference.

Relatively low pH stormwater has been observed onsite at NBF during heavy rainfall events. In accordance with the Industrial Stormwater General Permit (Permit) issued to the facility by Ecology, water from the facility can be discharged within a pH range of 5.0 to 9.0. CESF treatment is expected to be most effective within a pH range of 6.5 to 8.5. Buffering for pH may be performed to increase the effectiveness of the CESF system or to ensure discharged water is within the range required by the Permit.

The adjustment of pH for CESF systems is generally done with one of two chemicals: sodium bicarbonate or carbon dioxide (CO_2). Sodium bicarbonate raises low pH and CO_2 lowers high pH. Care must be taken during addition of bicarbonate or carbon dioxide in order to prevent over-correction of pH.

2.1.9 CHITOSAN METERING PUMP CALIBRATION

The following information has been adapted from Clear Water's Manual (Attachment 1). Clear Water technicians will operate and calibrate the chemical metering system. Metering pumps are often referred to as LMI pumps because of the common use of metering pumps produced by the manufacturer of that name. Calibrations are to be performed every 4 hours during initial startup, and as needed afterwards, but no less than once per week for the duration of system operation, to ensure that the dose rate is accurate. Additionally, the metering pump shall be recalibrated when a significant change occurs in the influent turbidity. Calibration results and flow rates will be recorded on the CESF system monitoring forms and the calibration records will be kept onsite.

OPERATIONAL NOTE: Metering pump dials should be adjusted **ONLY** when pumps are **OPERATIONAL.** Adjusting pump dials while pump is not running will likely result in pump damage and/or failure.

When adjusting the metering pump to obtain the proper dose rate, there are two primary adjustments: stroke frequency and stroke length. Experience has shown that the stroke frequency should be set as high as possible for a consistent rate of delivery, and then the stroke length adjusted to deliver the desired dose rate.

The CESF chemical injection system for the LTST system has four chitosan metering pumps with a dedicated delivery line for each pump; one metering pump is used for the pretreatment dose prior to stormwater entering the Storage Tanks, and the other metering pumps are used for the final chitosan dose prior to the sand filters.

Calibration Procedure:

1. Fill the calibration cylinder by opening the valve on the bottom of the cylinder. Fill the cylinder as close to full as the static head pressure on the storage tank will allow without overfilling.
2. Close the valve on the chitosan storage tank.
3. Allow the LMI pump to drain the cylinder to a desired volume and then begin timing the pump for 1 minute.
4. Close the cylinder valve at exactly 1 minute.
5. Immediately open the valve on the chitosan storage tank.
6. Read and record the volume of chitosan consumed.
7. Calculate the dose rate using the calculation table below. Pair the chitosan consumption rate with the corresponding stormwater flow rate.
8. Convert delivery rate from milliliters per minute (mL/min) to milligrams per minute (mg/min) (multiply result by 10 for 1% chitosan) and flow rate from gallons per minute (gallons/min) to liters per minute (L/min) (multiply by 3.78). Divide chitosan delivery rate by flow rate to get dose rate (ppm). Refer to formulas presented below.
9. Adjust delivery rate toward desired dose rate* if necessary and repeat procedure until proper dosage is achieved.
10. Record the final results on the Chemical Metering Pump Calibration Form.
11. Repeat procedure for next LMI pump.

* The desired dose rate depends on many variables including site and system history, turbidity levels, use level designation limits, water chemistry, flow rate, and pre-treatment activity. Typically, an operator should dose the minimum amount necessary to achieve the desired result. The dose rate for all three metering pumps for the final chitosan dose prior to the sand filters should be the same.

Formulas:

- Liqui-Floc delivery rate (mL/min) x 0.01 (chitosan concentration) x 1 gram per milliliter (g/mL) (weight of Liquid-Floc) = absolute weight of chitosan in grams per minute (g/min)
- Chitosan delivery (g/min) x 1000 milligrams per gram (mg/g) = delivery rate (mg/min)
- System influent flow (gpm) x 3.78 liters per gallon (L/gal) = flow rate (L/min)
- Delivery rate (mg/min) / flow rate (L/min) = dose rate in milligrams per liter (mg/L) = ppm.

When the LMI calibrations are complete, verify that the valve on the chitosan storage tank is open and the valve on the calibration cylinder is closed. Verify that all LMI pumps are on. Record the dose rate of the pretreatment pump and the sand filter pumps separately. Add these two dose rates together to get the overall system dose rate (e.g., if the pretreatment pump dose is 0.2 ppm and the dose

for each of the three sand filter pumps is 0.47 ppm, the overall system dose rate would be 0.67 ppm). The overall system dose rate shall not exceed the maximum allowable chitosan dose rate (1 ppm).

2.1.10 BACKFLUSH

Backflushing is the process by which water flow is reversed through the sand filter beds to expel the accumulated sediment. Each sand filter vessel is flushed one at a time while the rest of the vessels in the sand filter unit continue to operate normally. The stormwater that was filtered from the active vessels will fill the bottom header and a portion of it will be forced upward through the vessel being backflushed.

Although backflush cycles are automated, the process needs to be understood by the system operator, and periodically monitored (at least once per week) to ensure optimal backflush flows and pressures. Monitoring includes testing of the backflush mechanism and pressure differential switch. The backflush parameters will be controlled through the PLC, but can also be set from the control box, which is fixed to the side of the sand filter unit. Parameters include flush duration, delay between switching vessels, and backflush trigger setpoints for both pressure differential and time elapsed since last backflush. The setpoint for backflushing based on differential pressure will be initially set to 8 psi for new media, but will likely be adjusted (increased) as the media gets older. Additionally, backflushing will occur once per 4 hours of operation, as controlled by the PLC. These parameters may be adjusted once CESF system performance is observed, to optimize system performance and maximize the treatment flow rate.

As the filter beds become clogged with floc particles, the pressures between the top and bottom headers begin to deviate. The top header will gain pressure and the bottom header will lose pressure due to decreased water passage. When this pressure differential reaches the setpoint, the system will initiate the backflush cycle to remove the captured floc from the media bed.

The system requires a minimum of 20 psi effluent pressure for adequate backflush. Pressures below this will generally not be high enough to fluidize the sand beds, which is necessary for proper backflush. System pressures and flow rates will differ between operation and backflush cycles. Operators can monitor flows and pressures during transition to backflush to assure they remain optimal. Valve adjustments may need to be made accordingly. In addition to the effluent control valves, there is a valve at the end of the backflush header. This valve is set during system startup to optimize backflush flow without discharging filter media. This backflush valve generally does not need adjusting and should be adjusted only by experienced operators who are familiar with the system.

A sight glass is installed at the top of the backflush header to monitor backflush efficiency. The water in the sight glass should appear turbid during the initial stage of each vessel flush. Toward the end of the flush, the water should appear clearer as all of the floc is expelled from the sand bed. A backflush

sample line can also be used to monitor the effectiveness of the backflush. Flush duration will be set at 2 minutes. To increase backflush effectiveness, operators should generally increase the frequency instead of duration of the cycle.

The consequence of insufficient backflushing is impacted sand beds. Failure to backflush will cause excess floc accumulation in the filter. Excess floc under operating pressures will limit water movement through the beds. This is commonly called impaction, which is a condition that will cause system shutdown. The water in the filter must then be evacuated, the filters opened, and the sand in the filter broken up with a shovel. In extreme cases, the filter medium may be so compromised that it will need to be discarded and replaced. With the low TSS concentrations at NBF, this condition was not experienced at the STST system and is not expected to occur at the LTST system.

Backflush water is discharged to the Backflush Settling Tank where the solids can settle out. Stormwater from the Backflush Settling Tank will gravity-flow through an overflow port and into the Inlet Weir Tanks. Procedures for monitoring and removal of accumulated solids from the Backflush Settling Tank are discussed in the following section.

2.1.11 MONITORING AND REMOVAL OF ACCUMULATED SOLIDS

Any wastes from operation and maintenance of the LTST facility will be tested and profiled to determine contaminant concentrations and disposal requirements. Based on relatively low TSS concentrations in NBF stormwater, the Inlet Weir Tank is not anticipated to accumulate an amount of solids during system operation that would require frequent cleanout of solids. The solids level in the Inlet Weir Tank, each Storage Tank, and the Backflush Settling Tank will be inspected at least once per month. For the Inlet Weir Tank and the Storage Tanks, if the solids level at the bottom of the tank is greater than 12 inches, a sample of the solids will be collected for waste profiling purposes and the solids will be cleaned out from the tank.

The flow rate through the Backflush Settling Tank will be low enough that re-entrainment of solids is less likely than at the other tanks, and a deeper blanket of solids could accumulate without negative effects. Additionally, a deeper blanket of solids may allow for sludge thickening, which would limit the amount of liquid that would need to be removed and disposed of during tank cleanout. Therefore, the depth of solids in the Backflush Settling Tank may be allowed to reach up to 24 inches prior to waste profiling and cleanout.

Monitoring of accumulated solids will be performed with a Sludge Judge® or similar device inserted from the top of the tank to the tank floor. The device collects a sample that can be retrieved and visually inspected. The thickness of accumulated solids in the sampler is observed and recorded. An average of four or more readings, spread approximately equally along the length of the tank (for the weir

tanks, the four readings will be taken between the weir and the inlet end of the tank) will be used to determine if the solids level exceeds the aforementioned depths, and requires solids testing and tank cleanout.

The allowable depth of sludge blanket in each tank may be adjusted if monitoring suggests that the optimum sludge blanket depth is greater or less than the aforementioned depths. For example, if turbidity monitoring shows enhanced flocculation at the Inlet Weir Tank due a depth of solids greater than 12 inches, the depth at which cleanout is triggered may be modified.

2.2 SYSTEM MONITORING

This section describes the residual chitosan sampling procedure, the remote alert messaging system, and system bypass observation and documentation procedures.

2.2.1 CHITOSAN MONITORING

High doses of chitosan in the aquatic environment have exhibited toxic effects on fish in laboratory tests. Therefore, the system will be operated in a manner that prevents chitosan discharges to Slip 4. In the CESF process, the majority of the chitosan introduced into stormwater is removed along with associated solids during the coagulation/flocculation process and subsequent settling and filtration. Monitoring will be conducted to evaluate system performance in regards to limiting residual chitosan concentrations in CESF system effluent.

The residual chitosan test is used as a precautionary measure to alert technicians of potential treatment problems before significant impacts can occur. Boeing has discussed the use of CESF at NBF with Ecology. Ecology has stated that CESF is an approved water treatment process for construction projects and, although the NBF site is not a construction project, it does not object to the use of CESF at NBF. Ecology has issued a General Use Level Designation (GULD) for the use of CESF systems for stormwater discharges at construction sites (Ecology 2012). Although NBF is not a construction site, many of the conditions from this document, as discussed below, are applicable to the LTST system, unless otherwise noted.

- Formal written approval from Ecology is required for the use of chemical treatment at each site. Written approval must be obtained from the appropriate Ecology regional office. This approval applies only to discharges to surface waters.
  - The LTST system was installed (and is operated under) EPA authority. Ecology is aware of the work involving the LTST CESF system, and Boeing does not intend to go through the standard approval process with Ecology.
- This use level designation applies to ChitoVan™/SeaVan™ (1% and 1.5% chitosan acetate solution).

- EPA approved the use of up to 1.5% chitosan acetate in an email from Karen Keeley to Carl Bach of Boeing, dated January 12, 2012, as consistent with the Ecology GULD.

- The chitosan dose rate for water entering the filters shall not exceed 1 mg/L ChitoVan/SeaVan (as chitosan by weight). All calibration results must be recorded simultaneously with the flow rates and kept onsite.

- Source control procedures shall be implemented to the maximum extent feasible to minimize the need for the use of additional chitosan acetate for the pretreatment of stormwater. Additional ChitoVan/SeaVan (amounts greater than 1 mg/L chitosan by weight) may be used to pretreat water that exceeds 600 NTU. A portion of the 1 mg/L ChitoVan/SeaVan may be used to pretreat water less than or equal to 600 NTU. Pretreatment must occur in a tank or basin dedicated to pretreatment. All pretreated water must enter the sand filters. Pretreated water must have no less than 50 NTU and no more than 600 NTU before final dosing. This will help ensure that free chitosan does not enter the CESF system. Also, 1 mg/L ChitoVan/SeaVan (chitosan by weight) is sufficient to treat water in this range. Water exiting the pretreatment tanks must be continuously monitored for turbidity. An automatic integrated turbidity sensor shall be located on the output from the pretreatment tanks or basins. This sensor will alert the operator when turbidity values fall outside of the 50 to 600 NTU range. If this occurs, operators can reroute the out-of-spec water to the untreated stormwater pond, shut the system down, or conduct additional residual chitosan tests. One of these actions must occur each time the alarm goes off. Jar tests must be used to determine proper pretreatment dosing and proper treatment dosing.

  - Stormwater at NBF has a much lower turbidity than stormwater at construction sites, and has consistently been measured to be less than 50 NTU. In addition, the NBF project has a much lower effluent TSS/turbidity requirement than for a typical construction site. Therefore, the procedures outlined above are not considered applicable for the NBF project, but other adequate precautions are taken to ensure that chitosan is not overdosed and that there is no detectable residual chitosan in the sand filter effluent.

- Jar tests are to be conducted at startup to determine the dosage level of chitosan acetate solution. Jar test results are to be recorded in the daily operating log. If the results of the jar test indicate that the dose needs to be adjusted, the jar testing results and the indicated dose rate change shall be documented in the daily operating log.

  - Bench scale treatability tests will be conducted for LTST system operation to determine the dosage level of chitosan acetate solution for stormwater at NBF, as described in Section 2.1.7.

- During CESF operation, water quality influent and effluent shall be continuously monitored for pH, turbidity, and flow. For batch treatment systems, only water discharged from the batch treatment basins or tanks must be continuously monitored for pH, turbidity, and flow during discharge.

- The discharge flow rate shall be continuously metered and recorded. For batch treatment systems only, water discharged from the batch treatment basins or tanks must be continuously monitored for flow rate.

- The effluent shall be monitored for residual chitosan or aquatic toxicity. If effluent will be monitored for aquatic toxicity, the most sensitive test reported in the intended use plan must be used. If the effluent will be monitored for residual chitosan, a discrete grab sample of homogeneous sand filter discharge must be collected and analyzed within 30 minutes of the onset of operation and 2 hours after startup to confirm a discharge concentration below

0.2 ppm. The test is to be repeated whenever there is a change in dosage, or a significant change in influent turbidity or flow rate. For batch treatment systems, only water discharged from the batch treatment basins or tanks must be monitored. For batch treatment systems, an additional grab sample of the potential batch treatment discharge must be collected and analyzed for aquatic toxicity or residual chitosan before any discharge from treatment basins or tanks can occur.

  - The NBF system will be operated on a continuous basis and, therefore, will not have periodic startup similar to construction sites. When the system is started up, two grab samples will be collected and analyzed as described above. After the system is automated, it will be monitored for residual chitosan as described in Section 2.2.2.

- Discharges from the CESF shall be maintained below 0.2 ppm residual chitosan at all times. Discharges must be monitored for residual chitosan or aquatic toxicity. In the event that the chitosan residual in the discharge is greater than 0.2 ppm, the discharge exhibits aquatic toxicity, or when the CESF system fails to meet discharge quality requirements, a contingency plan must be included in every stormwater pollution prevention plan (SWPPP) that immediately corrects the situation. The operation and maintenance manual must include contingency plan measures and must be available onsite.

  - Residual chitosan testing procedures are provided in Section 2.2.2, along with a discussion of contingency actions if residual chitosan is detected and confirmed above 0.2 ppm.

- Discharges from the CESF system shall not cause or contribute to receiving water quality violations and shall comply with all known, available, and reasonable treatments (AKART) and local government requirements for turbidity and other applicable pollutants.

  - Stormwater discharge at NBF is permitted through the Industrial Stormwater General Permit. The interim goal for PCBs in discharged stormwater is 0.030 micrograms per liter (µg/L).

- Discharges from the CESF system under these designations shall achieve performance goals of a maximum instantaneous discharge of 10 NTU turbidity and a discharge pH within a range of 6.5 to 8.5. These limits reduce interferences associated with the residual chitosan test.

  - Discharges from the CESF system at NBF will be controlled to below 5 NTU and are generally within the pH range of 6.5 to 8.5. See Section 2.1.8 for a discussion of the expanded pH range applicable during the limited period of extreme rainfall events.

- The CESF facility contractor shall guarantee that the CESF system, when used as directed, will not produce treated water that exhibits aquatic toxicity caused by chitosan added as a treatment agent.

- The CESF system shall be operated only by a trained technician certified through an Ecology-approved training program that includes classroom and field instruction. The technician must have the following minimum training requirements:

  - Prerequisites:

    - Fundamental knowledge of high-pressure sand filter systems
    - Fundamental knowledge of water pumping and piping systems
    - Fundamental knowledge of stormwater discharge regulations for applicable region/locale

    - Fundamental knowledge of stormwater quality testing procedures and methods for parameters applicable to the region/locale.
  - Classroom (8 hours)
    - Stormwater regulatory framework and requirements
    - Stormwater treatment chemistry (chitosan, pH, coagulation, filtration, etc.)
    - Stormwater treatability (how to do jar testing)
    - Treatment system components and their operation
    - Treatment system operation
    - Troubleshooting.
  - In the field (32 hours)
    - Operating the treatment system
    - Entering data in the system operations log
    - Testing turbidity and pH
    - Optimizing chitosan dose rate
    - Water quality sampling and testing (turbidity and pH)
    - Residual Chitosan Test.
- The SWPPP is to include a field procedure, accepted by Ecology, for detecting residual chitosan in stormwater discharges sensitive to 0.2 ppm.
  - Procedures for residual chitosan detection are provided in Section 2.2.2 below.

2.2.2 RESIDUAL CHITOSAN TEST

The treatment system will be operated in accordance with applicable local, state, and federal regulations and standards. At the STST system, residual chitosan testing was initially performed daily during routine system monitoring. After discussions with the EPA, residual chitosan testing frequency was decreased to once per week to verify that no dissolved chitosan is making it past the sand filter system, as no residual chitosan had been detected in 8 months of STST system operation. Based on successful operation at the STST, detection of residual chitosan from the LTST system is not likely.

The chemical composition of chitosan is such that it binds to the anionic solids as well as other chitosan molecules within the top layers of the sand filter media rather than going through the filter in a dissolved form, making the presence of residual chitosan (>1 mg/L) in treatment system effluent nearly impossible. It should be noted that Clear Water has performed controlled pilot tests and experiments in which influent dose rates of up to 50 mg/L have not yielded a positive residual chitosan test. Residual chitosan testing at the LTST system will be conducted twice during initial startup, then daily for the first week of operation. If the results are negative for residual chitosan, then testing will be performed twice monthly for the duration of system operation. If a positive result is received at any time during system

operation, testing will revert to a daily frequency until 1 week of consecutive negative results is achieved. Additional testing will also be performed whenever the dose rate or turbidity changes significantly. The following procedure, taken from Clear Water's Manual (Attachment 1), was produced as a quick reference for Clear Water technicians with considerations given to company-specific equipment.

Required Equipment: There should be two separate, clearly marked, sets of equipment. One set will be used for the sample analysis and should be marked "sample." The second set will be for the matrix spike used for a color comparison. The second set should be marked "spike." Equipment includes:

- Two stir rods
- Two 140 mL capacity plastic syringes with threaded tip
- Two threaded plastic Swinnex filter seats
- Two plastic 1L beakers
- One pair of forceps
- Plastic disposable droppers
- Fiberglass micro filters
- Chemicals: 1 percent chitosan acetate, 0.1N solution Iodine, Sodium Bicarbonate (with scoop).

Procedure: Make sure all equipment is washed thoroughly and proper laboratory procedures are followed. Most "hits" produced in this test are actually false positives that are due to contaminated equipment.

1. Take two separate 1-liter samples from the sand filter effluent sample line.
2. Measure and record pH, turbidity, and conductivity on the Residual Chitosan Test Monitoring Form. Transfer all relevant data from the LMI calibration to this form.
3. Add two drops of 1 percent chitosan acetate to the beaker marked "spike." Stir vigorously for 1 minute to assure dissolution. This beaker now has a chitosan concentration of approximately 0.2 ppm.
4. Add one scoop (approximately 5 grams) each of sodium bicarbonate to the sample and the 0.1 ppm spike sample. Stir vigorously for 1 minute. Read and record the adjusted pH. The new pH level must be at 8 or above to cause the chitosan to come out of solution.
5. Open the Swinnex filter seats and carefully place clean filter papers in each one with a pair of forceps. Carefully thread the seats back together. Avoid cross-threading the seats for proper filter dosing.
6. Draw 100 mL of the treated sample water from the "sample" beaker into the "sample" syringe. Thread the "sample" filter seat onto the syringe. Slowly push the sample water through the filter. Repeat with another 100 mL (200 mL total). Repeat procedure with "spike" sample.
7. Remove the filter seat from the syringe and then remove the filter from the seat with forceps. Remove the sample first and the spike second to avoid contamination.

8. Place each filter on a clean, inverted glass beaker to dry. Place the beaker a reasonable distance in front of a space heater to facilitate drying. Dry completely for optimum results.
9. After the filters are dry, add one drop of iodine to each filter. Wait 15 minutes to interpret results.
10. A light yellow rust color indicates the absence of chitosan. This is how the sample should appear. A dark brown or blue/black color indicates the presence of chitosan. This is how the spike sample should appear.

If an operator gets a positive test, the system will immediately be shut down and investigated to determine if any of the operating parameters are out of specification. The system can then be corrected and the filtrate re-tested to confirm the absence of chitosan in the treated filtrate. If chitosan above 0.2 ppm in the treated filtrate is confirmed, the sand filter media will be replaced.

2.2.3 REMOTE ALERT MESSAGING SYSTEM

In addition to daily monitoring conducted onsite by a technician as described in Section 2.1, the treatment system at NBF will incorporate a remote alert messaging system that will send text messages to Clear Water staff, enabling them to remotely monitor the status of the treatment system. These messages can alert a technician to situations that may require an unanticipated site visit to investigate the potential problem. The situations that will send a text message to Clear Water staff include:

- High "Pond" Alarm – indicates a high level in the Inlet Weir Tank
- High Tank Alarm – indicates a high level in the Storage Tanks
- Backflush – indicates a backflush cycle is taking place
- Recirculation – indicates a recirculation event is taking place
- High Effluent Turbidity
- High Influent Turbidity
- High and Low pH
- High and Low Pressure (system)
- High and Low Pressure (air compressor)
- Pump Faults
- Power Failure
- Excessive Backflush.

2.2.4 TREATMENT BYPASS

Treatment system sizing is discussed in the Design Report. To assess the amount of stormwater treated and the amount of bypass from the preferentially-treated North Lateral at NBF, the water level datalogger (pressure transducer) installed upstream of the weir in MH130B on September 22, 2010 will

continue to record water levels. The transducer collects a water level reading every 30 seconds. The water level readings will be compared to the weir elevation to determine the time and duration of overflow events and to estimate the volume of stormwater bypassing the treatment system. The pressure transducer will be calibrated quarterly to ensure continued accuracy and replacement of the desiccant on the vent tubing will be performed as needed (based on visual color change of the desiccant media) to prevent moisture damage to the transducer.

Boeing will continue to report operational data (e.g., total gallons of stormwater treated, rainfall data, and any unusual events) on a monthly basis in progress reports submitted to EPA by the fifth day of each month. Those monthly progress reports will include the calculated estimate of the volume of stormwater from MH130B that bypassed the CESF system in the previous month.

2.2.5 SPILL PREVENTION AND CONTINGENCY

Several engineering controls will be put in place to prevent stormwater from overflowing the system and discharging to ground surface. It should be noted that while these measures are considered appropriate and important to the system design, spills of water to the ground surface are not catastrophic in nature. The following system controls prevent overflows or spills of stormwater:

- High level alarms increase pumping flow rates to empty the tank.
- High-High level alarms will shut off pumps at MH130A and LS431 and dial-out alarm conditions to system operators.
- Tanks are outfitted with overflow ports that connect to the lift station, acting as a natural bypass if the system is inundated and some malfunction in the system and high-high level alarm condition shutoff. These overflow ports are the third layer of defense to prevent overflowing the stormwater to the ground surface. Flow rates of stormwater through the system could conceivably reach a maximum of 1,739 gpm (1,500 gpm design pumping flow from MH130A and LS431, and potentially the 239 gpm backflush flow from the sand filters). Tank overflows are design to accommodate this discharge directly to the lift station.
- To protect system piping, flexible flanged fittings are installed in each piping run near process equipment or the system influent connections (above ground).
- Regular system monitoring, inspection of process equipment, and review and documentation of operational parameters is the most effective way to proactively prevent spills. Operators inspecting equipment or responding to system dial-outs will assess system integrity and shut down the system and perform repairs if necessary.
- It is not expected that fuel of any type will be stored at the site.
- Chitosan storage is limited to three 200-gallon containers, connected for leveling. Container integrity will be monitored closely and a spill kit will be stored nearby in case of an accidental spill.

3.0 PERFORMANCE MONITORING

A Sampling and Analysis Plan (SAP) has been developed for this system and was provided as Appendix C of the 100% Design Report (Landau Associates 2011). Revisions are being made to the SAP and the final version will be submitted to EPA on December 28, 2011. The SAP is made up of a Field Sampling Plan (FSP) and a Quality Assurance Project Plan (QAPP). Please refer to the SAP for details regarding sampling objectives, sampling locations, sampling methodology, and quality assurance objectives and procedures. The following sections provide a brief introduction to these topics.

3.1 SAMPLING OBJECTIVES AND LOCATIONS

The objectives of field sampling are to gather data to monitor compliance with LTST interim goals, and to evaluate the performance of the LTST facility. This includes monitoring the LTST system to assess both the performance of the CESF system in removing PCBs and TSS and monitoring of NBF full-site stormwater discharges at the point of compliance (LS431).

To achieve these objectives, sampling will occur at the following locations:

- **Lift Station (LS431)**
  - Compliance monitoring point
  - Located downstream of the LTST system effluent discharge
  - Flow-weighted whole water sampling
- **LTST Facility**
  - Whole water and filtered solids sampling of influent and effluent
    - North lateral (MH130A) sampled independently from the combined influent (LSIV)
  - Inlet Weir Tank, Storage Tanks, and Backflush Settling Tank
    - Thickness of solids monitored monthly
    - Solids will be sampled and characterized prior to disposal
  - Sediment traps
    - Solids collected from sediment traps SL4-T1, SL4-T2, SL4-T3, SL4-T4, SL4-T4A, SL4-T5, and SL4-T5A
    - It is expected that the City of Seattle will continue to monitor sediment traps SL4-T1A, SL4-T2A, and SL4-T3A
  - Sand filter media
    - Prior to disposal, samples will be collected from the spent sand media for characterization.
- **Re-routed King County Stormwater – North Lateral**
  - Flow-weighted whole water sampling

3.2 DATA QUALITY OBJECTIVES AND REPORTING

Performance monitoring must be capable of producing data of sufficient quality to evaluate PCB removal effectiveness, compliance with the interim action goals, and disposal of treatment solid wastes. Please refer to the SAP for details concerning how these data quality objectives are met and proper usage of the generated data. To confirm the general effectiveness of the LTST treatment system, TSS removal will be monitored. The STST system had requirements to consistently achieve 95 percent removal of TSS from stormwater, or, if the influent TSS was less than 20 mg/L, the system was to achieve a treated effluent TSS not to exceed 1 mg/L. It is anticipated that the LTST system will also achieve these removal efficiencies. If sample analysis shows this goal is not being met at the LTST, Boeing will make adjustments to the treatment system based on observed performance and sample data.

Until such time that EPA approves of alternate reporting requirements, Boeing will continue to prepare monthly progress reports and submit those reports to EPA by the fifth day of the following month (or the first subsequent work day if the fifth day of the month falls on a weekend or holiday). Monthly progress reports will continue to include information related to stormwater treatment system operation (i.e., total gallons of stormwater treated, rainfall data, any significant operational problems or system shutdowns) and will contain summary data tables of all validated stormwater analytical testing results that were received from the laboratory by the 24th of the month. Results of the Stage 2A data validation, as described in the SAP (Landau Associates 2011), will be documented in a technical memorandum. The technical memorandum will include a disk with electronic copies of chain-of-custody forms and laboratory data packages, and submitted to EPA with project monthly reports.

4.0 USE OF REPORT

This Operation and Maintenance Manual has been prepared for the exclusive use of The Boeing Company and applicable regulatory agencies for the North Boeing Field property area. No other party is entitled to rely on the information and recommendations included in this document without the express written consent of Landau Associates. Further, the reuse of information and recommendations, without review and authorization by Landau Associates, shall be at the user's sole risk. Landau Associates warrants that within the limitations of scope, schedule, and budget, our services have been provided in a manner consistent with that level of care and skill ordinarily exercised by members of the profession currently practicing in the same locality under similar conditions as this project. We make no other warranty, either expressed or implied.

This document has been prepared under the supervision and direction of the following key staff.

LANDAU ASSOCIATES, INC.

For Martin Valeri, E.I.T.
Senior Staff Engineer

Jeremy Davis, P.E., C.H.M.M.
Senior Project Engineer

Joseph A. Kalmar, P.E.
Principal

JMD/JAK/ccy/tam

5.0 REFERENCES

Ecology. 2012. *Use Designations for Erosion and Sediment Control for Chitosan-Enhanced Sand Filtration 1% and 1.5% ChitoVan™*. Washington State Department of Ecology. Updated January.

Landau Associates. 2011. *100% Design Report, Long-Term Stormwater Treatment, North Boeing Field, Seattle, Washington*. Prepared for The Boeing Company. June 24.

Landau Associates. 2010. *Proposed Design, Short-Term Stormwater Treatment Facility, North Boeing Field, Seattle, Washington*. Prepared for The Boeing Company. July 15.

SAIC. 2010. Draft: *North Boeing Field/Georgetown Steam Plant Site Remedial Investigation/ Feasibility Study: Assessment of Infiltration and Inflow to North Boeing Field Storm Drain System*. Prepared for the Washington State Department of Ecology. Science Applications International Corporation. July 14.

TABLE 1
SUMMARY OF MONITORING TASKS
CHITOSAN-ENHANCED SAND FILTRATION SYSTEM - NORTH BOEING FIELD
SEATTLE, WASHINGTON

Task	Section of O&M Manual	Frequency Required
Routine Site and System Inspection	Section 2.1.4	Minimum Once Per Week, Daily During any Non-Routine Activities
Sensor Calibration	Section 2.1.6	Weekly
Bench Scale Treatability Test	Section 2.1.7	Conducted during first week of initial startup. Also to be conducted if influent water quality changes significantly.
Chitosan Metering Pump Calibration	Section 2.1.9	Every 4 hours during initial startup, then minimum of once per week. Also whenever chitosan dosage rate is changed.
Backflush System Monitoring	Section 2.1.10	Weekly
Monitoring and Removal of Accumulated Solids	Section 2.1.11	Monthly monitoring; removal when solids accumulation meets or exceeds 12 inches (inlet weir tank or storage tanks) or 24 inches (backwash settling tank). Allowable depth may be adjusted based on monitoring results.
Residual Chitosan Test	Section 2.2.1	Twice during startup, then daily for first week of operation. If all results are negative for residual chitosan, then twice monthly for the duration of system operation. If a positive result is received, testing will revert to a daily frequency until one week of consecutive negative results is achieved. Also whenever the dose rate changes or when turbidity or flow rate changes significantly.
Sampling of System Influent/Effluent	Section 3.1	See Sampling and Analysis Plan
Sampling at Compliance Point (LS431)	Section 3.1	See Sampling and Analysis Plan
Sampling of Re-routed King County Stormwater - North Lateral	Section 3.1	See Sampling and Analysis Plan
Sampling of Solids from LTST Tanks and Sand Filters for Disposal Characterization	Section 3.1	See Sampling and Analysis Plan
Sediment Trap Sampling	Section 3.1	See Sampling and Analysis Plan

ATTACHMENT 1

Clear Water Compliance Services Operation and Maintenance Manual

OPERATION AND MAINTENANCE MANUAL

FOR

CHITOSAN-ENHANSED SAND FILTRATION SYSTEM

Clear Water Services

Prepared for
The Boeing Company

© Clear Water Services

©Proprietary and Confidential. Property of Clear Water Services. All Rights Reserved ©

TABLE OF CONTENTS

1	**INTRODUCTION**		
	1.1	Introduction to Chitosan Enhanced Stormwater Treatment	3
	1.2	Introduction to Chitosan	3
	1.3	Treatment Overview	4
	1.4	Treatment System Components	5
2	**TREATMENT CONCEPTS AND DESIGN**		**12**
	2.1	Stormwater Regulations	12
	2.2	Water Chemistry	12
	2.3	Screening and Treatability Tests	13
	2.4	Retention Structures and Sediment Management	13
	2.5	Interconnecting Piping	15
	2.6	Plumbing	15
	2.7	Chitosan Delivery System	17
	2.8	Water Quality Monitoring	18
3	**TREATMENT SYSTEM OPERATIONS**		**19**
	3.1	System Operator	19
	3.2	System Operation Sequence	20
	3.3	Site and System Inspection	22
	3.4	Field Documentation	23
	3.5	Sensor Calibration	24
	3.6	Preliminary Water Quality Tests	26
	3.7	Pump Activation	29
	3.8	System Optimization	30
	3.9	pH Treatment	31
	3.10	LMI Calibration	31
	3.11	Residual Chitosan Test	33
	3.12	System Discharge	35
	3.13	Backflush	35
	3.14	System Shut Down	36
4	**CONTROL SYSTEM OPERATION**		**38**
	4.1	Touch Screens	38
	4.2	Alarm Glossary	42
5	**ATTACHMENTS**		**43**

©Proprietary and Confidential. Property of Clear Water Services. All Rights Reserved ©

INTRODUCTION

1.1 CHITOSAN-ENHANCED STORMWATER TREATMENT

This Operation and Maintenance Manual (O&M Manual) has been written to describe the elements involved in the deployment, operation and maintenance of the long term, chitosan-enhanced sand filtration systems for treating stormwater at North Boeing Field (NBF).

Chitosan enhanced sand filtration (CESF) is a safe and effective method for removing sediment from stormwater runoff. Proper stormwater management protects our natural waterways and enables site development. Flow-through CESF systems can treat far greater quantities of stormwater runoff than traditional settling processes. CESF is not a substitute for traditional stormwater management techniques. This technology is to be used in conjunction with standard erosion and sediment control measures.

1.2 INTRODUCTION TO CHITOSAN

Chitosan is extracted from chitin and is nature's second most abundant natural biopolymer next to cellulose. Chitin is the structural material found in crustacean shells such as shrimp, crabs, and lobsters. Chitin is also found in fungi cell walls and the exoskeletons of insects. Chitin and chitosan are natural components of biochemical degradation processes occurring naturally in the earth's soil and water. Like chitin, chitosan is found to exist naturally in the environment (water and soil) because it is a biodegradation product of chitin.

Chitosan acetate has been used in water treatment for more then three decades. It has the unique ability to absorb dissolved oil and grease from water, chelate (bond with) heavy metals, and flocculate suspended sediment. Chitosan-based water treatment has been used for decades in various industrial and municipal applications and commercial aquarium clarification. The U.S. Environmental Protection Agency has approved chitosan for use in drinking water treatment and in the agriculture industry.

There are different chitosan acetate solutions formulated specifically to treat construction stormwater. In the State of Washington, the use designation for chitosan acetate depends on the product manufacturer, concentration, and treatment method. The body of this text will explain treatment operations for General Use Level Designation of 1% and 1.5% chitosan for direct discharge.

Stormwater treatment with Chitosan, at proper dose rates, is highly effective in reducing turbidity levels by greater than 95% when used with sand filtration systems. Chitosan's effectiveness lies in its ability to make small suspended soil particles larger and denser. The larger and denser floc particles can be easily removed through forced settling or sand filtration. The cationic nature of chitosan molecules interact with the

©Proprietary and Confidential. Property of Clear Water Services. All Rights Reserved ©

predominately anionic sediment particles in stormwater. As these opposite charges attract, the chitosan molecules can bind with numerous soil particles. This process of flocculation creates larger, denser particles in solution, allowing them to settle via gravity or be removed by filtration systems. Over dosing can cause the opposite of the intended effect. An excess of cationic material can cause the floc that initially formed at a lower dose to break apart.

1.3 CESF TREATMENT OVERVIEW

Chitosan-enhanced sand filtration is a flow-through stormwater treatment technology that utilizes chitosan in conjunction with pressurized sand filtration to remove suspended sediment from stormwater runoff. These systems were originally designed to be deployed on construction sites for the duration of a particular development project and then removed after the successful stabilization of all disturbed areas. Voluntarily, The Boeing Company (Boeing) implemented a pilot study and finally this long term treatment system to prevent the discharge of polluted stormwater runoff from industrial activities.

After a careful study of site hydrology, local precipitation patterns, and results from a pilot study conducted from September of 2010 to October of 2011, Boeing will install appropriate industrial pollution control measures called Best Management Practices (BMPs). The BMPs will help reduce the turbidity of the site runoff conveyed to a retention tank for treatment. The treatment system is designed and installed to operate on a totally automated basis, pumping water from two storm-sewer collection areas and through the CESF system on demand. The system has been designed to send alarms before shutdown conditions arise, to allow technicians to respond to system upsets.

On a weekly basis, Clear Water technicians will complete a list of required tasks. A site inspection, meter calibrations, water quality tests, manual valve operation and paperwork initiation will occur in order to assure operator safety and proper system operation. After all weekly procedures are completed the operator will monitor and record system pressures and flow volumes for all three systems, pretreatment, the vault pump, and MH130A pump, before leaving. Maintenance will also be conducted monthly on a standard schedule.

When stormwater is transferred through the CESF system, chitosan is introduced to the water to coagulate suspended solids, which then will settle out via gravity or be removed within the sand filter. The sand filters are equipped with automatic backflush systems, which will backflush the filtered sediment from the individual filter pods as necessary to maintain the hydraulic capacity of the filtration media. This feature allows the treatment system to operate on a continuous flow-through basis. The treatment systems are also equipped with in line pH and turbidity sensors capable of monitoring and recording the effectiveness of the treatment. Automated valves direct treated stormwater to recirculate or discharge based on the water quality readings of the in line sensors.

©Proprietary and Confidential. Property of Clear Water Services. All Rights Reserved ©

Familiarization with current site and weather conditions, pond water level, project manager (PM) and contractor concerns, and operation schedules are the responsibility of the technician. Good team work will ensure operational success and personal safety.

1.4 TREATMENT SYSTEM COMPONENTS

Although there are variations between individual CESF systems, many of the basic components are similar. The following is a list of the individual segments that one would expect to see associated with a CESF system.

1) **Stormwater retention structure[s]** — Stormwater retention structures include ponds, tanks or vaults. A vault in the ground at NBF collects water and pumps it to an 18,000 gallon weir tank built by Pinnacle Manufacturing, LLC. Backflush water flows to an identical, adjacent weir tank. Preatreated water is pumped to three 21,000 gallon storage "Frac" tanks also built by Pinnacle Manufacturing, LLC. No ponds are being utilized at NBF.

©Proprietary and Confidential. Property of Clear Water Services. All Rights Reserved ©

2) Interconnecting piping — Water will be conveyed via underground storm sewers to the vault structures. 4”, 6”, 8”, 10”, and 12” schedule 80 PVC piping integrates all the components in the treatment system and conveys the water to the discharge point. Polyethylene tubes will be used for sampling from the control unit and stainless steel pipe will be used in the bag filter assemblies.

3) Pipe fittings – PVC pipes are typically connected with couplers and glue. Flanges with a rubber sealing gasket connect the PVC pipe to solid structures like tanks, pumps, filters and the control unit. Flexible flanges are used in some connections to account for vibration.

©Proprietary and Confidential. Property of Clear Water Services. All Rights Reserved ©

4) Primary influent and pretreat pump — The pretreatment pump is a 40 hp electric centrifugal pump made by Goulds. The main pumps are three 20 hp electric centrifugal pumps, also made by Goulds. One pump per 500 gpm system pushes water through the sand filter.

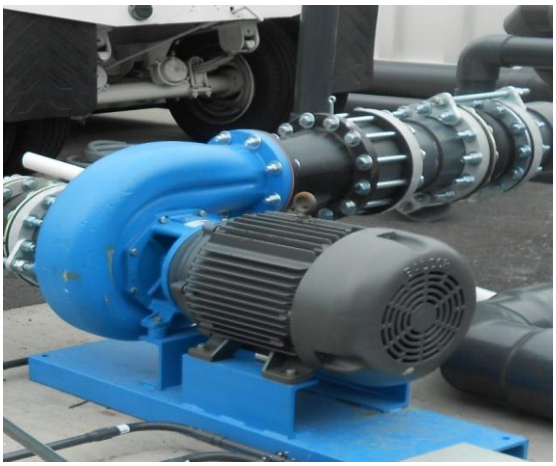

5) Chitosan injection system — The chitosan injection system consists of a storage tank, LMI delivery pump, graduated cylinders for calibration, a static mixer, and assorted tubing and control valves.

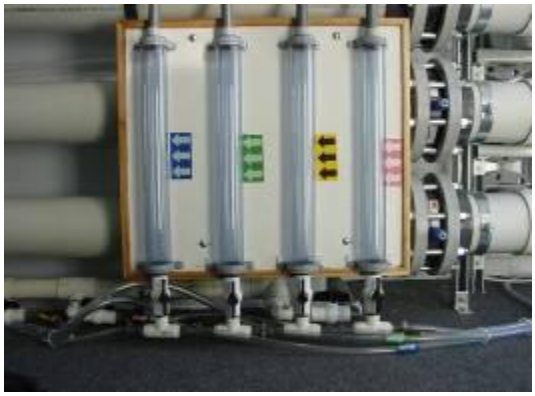

©Proprietary and Confidential. Property of Clear Water Services. All Rights Reserved ©

6) Sand Filtration Unit — The 54X4 sand pod unit with back flush capabilities is most commonly used. Three pod units or units with different diameters may also be encountered. Sand pods are the primary cleaning mechanism of the CESF system.

7) Effluent water quality monitoring equipment — This equipment continuously samples the effluent water for pH and turbidity. The system includes pH meters and flow meters manufactured by GF Signet, turbidimeters made by MicroTol and an instrument display panel and sample lines built by Clear Water. Data collected here is recorded by the three PLCs manufactured by .

©Proprietary and Confidential. Property of Clear Water Services. All Rights Reserved ©

8) Manual valves — Manual valves are used by the operator to control flow rates and internal system pressures. There are manual valves located on the influent and effluent side of the sand filter, as well as on the backflush line. Additionally, a manual throttle valve may be located on the system pump.

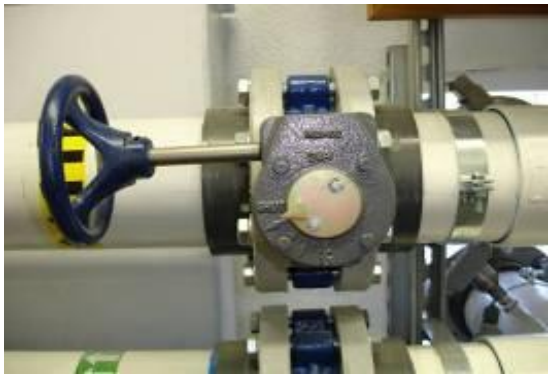

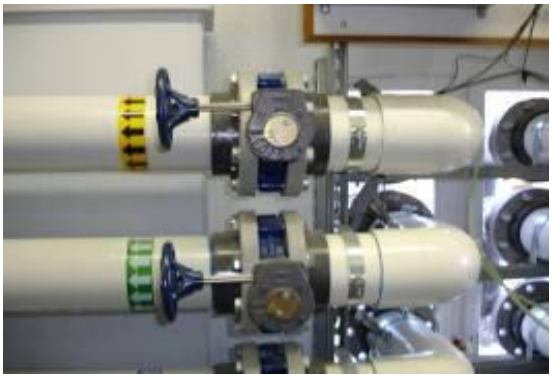

9) Automatic valves — Automated pneumatic valves built by Hayward are located on the effluent line in the system container. These valves divert flow between the discharge and recirculation lines based on the water quality readings of the in-line sensors.

10) Programmable Logic Controller (PLC) — Primary control panel used to operate the treatment system. All automated controls, alarm settings, and recent system data are stored in the PLC.

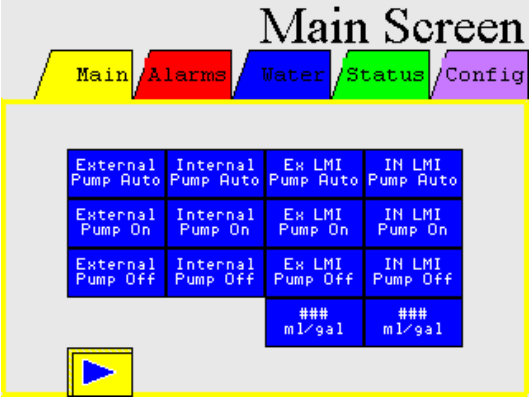

©Proprietary and Confidential. Property of Clear Water Services. All Rights Reserved ©

11) Power— Permanent 400 amp, 480 volt 3-phase power provides electric power for CESF equipment and operations. Individual power boxes with emergency shutoff "Knife" switches provide power to the pumps from the main power going to the control unit.

12) Laboratory Equipment — Components for bench scale testing and monitoring include handheld meters, beakers, droppers, filters, standard solutions, chemicals, monitoring forms and other miscellaneous items.

13) Air Compressor — Provides pressurized air to operate pneumatic control valves on the CESF effluent line and backflush valves on the sand filter

©Proprietary and Confidential. Property of Clear Water Services. All Rights Reserved ©

14) Backflush Control Box — Sets parameters for sand filter back flush cycles. 3-way backflush valves activate automatically based on differential pressure in the filter.

©Proprietary and Confidential. Property of Clear Water Services. All Rights Reserved ©

TREATMENT CONCEPTS AND SYSTEM DESIGN

2.1 STORMWATER REGULATIONS

Construction and industrial stormwater runoff have been identified as a major source of pollution in our nation's natural waters. The physical, biological and chemical integrity of a natural water body receiving discharge from a construction or industrial site can be greatly impacted.

The two major laws that most stormwater regulations emanate from are the Federal Clean Water Act and Endangered Species Act. The Environmental Protection Agency is ultimately responsible for enforcement of these laws, but may delegate enforcement to a state agency. (Note: many Clear Water treatment procedures are based on DOE regulations. Always consult local regulations before operating CESF systems.)

Whenever Clear Water intends to treat runoff from a particular site a Stormwater Treatment Plan (STP) must be produced as mandated by DOE. This STP explains exactly how the CESF system will be used on a specific site as part of an integrated Stormwater Pollution Prevention Plan (SWPPP). An STP will be included inside every active CESF system container. All operators should read the STP for any site they are working on to become familiar with site specific and general operational information.

There are many other stormwater regulations that are beyond the scope of this text. Increased knowledge of stormwater regulations will improve an operator's effectiveness. Additional information is available through Landau Associates, Clear Water resources, as well as the DOE website.

2.2 WATER CHEMISTRY

Effective implementation of a treatment system requires a thorough understanding of site stormwater characteristics and the potential impact on chitosan flocculation. Potential contaminants such as VOCs, PCBs, heavy metals, etc., must be identified and remediated prior to discharge. Other compounds such as naturally occurring lignins and tannins can impact the CESF treatment process but do not pose a concern for discharge.

CESF systems are designed to treat turbid stormwater impacted with suspended sediments. Many environmental contaminants, including PCBs, can be adsorbed to soil particles and become suspended in stormwater runoff. Many of these contaminants can be removed from solution by removing the sediment.

Prior to full-scale deployment, it is essential to conduct a series of bench scale treatability tests to ensure the stormwater sediment is conducive to treatment with

©Proprietary and Confidential. Property of Clear Water Services. All Rights Reserved ©

chitosan. These tests should be focused on determining stormwater turbidity and pH, treatability, proper chitosan dose rate, and potential settling times if required. Many of these factors were determined during the pilot scale testing from September 2010 to October 2011

Aside from harmful contaminates, the water chemistry variables of primary concern are pH, turbidity and conductivity. pH must be in the range of 6.5 - 8.5. Values outside this range may require pH adjustment prior to flocculent addition. Typical pH adjustment involves either adding Sodium Bicarbonate to adjust the pH upward or adding (CO_2) to adjust down. The use level designations require pretreatment for stormwater greater than 600 NTU.

Although CESF systems are capable of continuous operation when turbidity approaches 600 NTUs, experience has shown that optimal system function is typically limited to influent turbidities less than 200 NTU. Generally, typical pre-treatment activity will bring NTU levels well within range of sand filter use. High turbidity (in excess of 600 NTU for an extended period of time) may require reevaluation of existing site Best Management Practices (BMPs).

2.3 SCREENING AND TREATABILITY TESTS

It is essential to confirm early on that site stormwater is conducive to treatment with chitosan. Although we have verified the effectiveness of chitosan in the stormwater at NBF using our pilot study from September 2010 to October 2011, a simple bench scale treatability test enables Clear Water technicians to assess the treatability of site stormwater quickly in the field as well.

Bench scale treatability testing allows PMs and system operators to determine a likely chitosan dose range. On large sites, it is strongly recommended that Clear Water technicians perform treatability tests using samples from several different areas of the site.

Several factors can influence treatability, including pH (typically from concrete work onsite or natural limestone), detergents, hydrocarbons, the presence of soil tackifiers such as polyacrylamides (PAMs) and guar in the runoff.

Bench scale treatability tests should be performed to address treatability issues if they should arise.

The procedure for this test is described in section 3.6 of this manual

2.4 RETENTION STRUCTURES AND SEDIMENT MANAGEMENT

Stormwater retention ponds and traditional erosion control devices are the first line of defense in sediment management. CESF systems are more effective when properly

©Proprietary and Confidential. Property of Clear Water Services. All Rights Reserved ©

integrated into a SWPPP that uses traditional erosion and sediment control techniques. Actual sizing and placement of retention structures and BMPs is beyond the scope of this document. Regardless of the type and size of structure, the following components are necessary for implementation:

1) Traditional BMPs — Traditional BMPs are essential to proper stormwater management. These surface stabilization measures help prevent significant erosion and sediment movement. CESF is intended to aid, not to substitute, standard stormwater management techniques.

2) Primary retention structure — The water reservoir in which all untreated stormwater is directed and stored. This is typically an excavated pond prepared by the contractor to store site runoff. The storage capacity of these structures varies depending on the size of the disturbed area and site limitations. At NBF, the Primary retention structure is the initial, 18,000 gallon weir tank.

3) Pretreat retention structure — Secondary retention structure in which pretreated, unfiltered stormwater is allowed to settle prior to sand filtration. These structures can be ponds or above ground tanks. At NBF three, 21,000 gallon storage tanks will reduce and dissipate energy in the flowing water and aid in sediment settling.

4) Backflush (from the sand filtration system) — Backflush water will contain floc particles accumulated on the surface of the sand filter beds. These floc particles will settle rapidly in the retention structure due to their large size and density. The rate of settlement will depend on sediment load, water chemistry and flow rate. Backflush water should never be directly released into the receiving water body.

Every effort should be made to avoid routing backflush water to the primary retention structure. Ideally, the backflush outflow should be directed to a dedicated backflush tank which overflows into the pre-treat cells. Backflush will be directed to the backflush weir tank and overflow to the influent side of the initial weir tank.

- If there is any possibility that the coagulated/flocculated sediment (sludge) contains hazardous materials, then the retention structure should be lined to facilitate proper handling and disposal of contaminated sediments. Lining the retention structure will also prevent unwanted infiltration of untreated water.

- Disposal — Levels of solids in the tanks are monitored monthly. When solids removal is necessary, a composite sample of the solids is collected for waste characterization and is handled in accordance with applicable regulations.

©Proprietary and Confidential. Property of Clear Water Services. All Rights Reserved ©

2.5 INTERCONNECTING TREATMENT SYSTEM PIPING

The filtration system requires interconnecting piping capable of transferring desired flow rates without significant friction head losses. Schedule 80 polyvinylchloride (PVC) pipe is used to interconnect the system components. Sizing should be in accordance with system requirements, and will generally be as follows:

PIPING SIZES AND FLOW RATES

FLOW RATE	*PIPE SIZE*
Up to 350 gpm	**4”**
350-750 gpm	**6”**
+750 gpm	**8”**

The headers on the sand filter and the internal piping of the treatment system container are 6 inches in diameter. The ideal diameter of the external system piping is 6 inches which will maintain consistent pressures and flow rates. Reducing the diameter of a conveyance line (pipe) will increase the pressure the water exerts within that line. Conversely, increasing the diameter down a conveyance line will relieve the pressure in that line.

The treatment system container has hand operated flow control valves located on the influent and effluent lines for the sand filter. These valves control pressure and flow rates in and through the sand filter. In addition, the sand filter has a flow control valve located on the back flush line. Flow control throttle valves may also be located on the system pumps.

2.6 PLUMBING

As the treatment system container and sand filter is equipped with 6” pipe, it is recommended that 6” pipe be used to connect the system components. There are many factors that influence the type and size of pipe used for a CESF system which are beyond the scope of this manual.

Most CESF systems are equipped with pretreatment and backflush capabilities. The backflush line from the sand filter is a 4” header and will require 4” pipe. The pretreat line will require a pump separate from the main system pump and will be assembled using a minimum diameter of 8” pipe and fittings.

©Proprietary and Confidential. Property of Clear Water Services. All Rights Reserved ©

Before plumbing the system, make sure all required system components are in place and as level as possible. This includes the system operation container, water pumps, electrical generator, sand filter and any tanks.

CAUTION: BE SURE TO LEAVE ACCESS TO THE TREATMENT CONTAINER AND GENERATOR FOR ANY VEHICLES NEEDED TO RESUPPLY CHITOSAN AND DIESEL!

If the pump being used is submersible it should be connected to a flotation device prior to placement in a pond. Many types of flotation devices are used. The decision on which type to use needs to be made based on the size of the pump. If the pump being used is not a submersible pump, the intake line should be connected to a suction float with a debris screen. Flotation devices and screens prevent the introduction of rocks, sticks, mud and other debris to the pump. This can prevent costly maintenance, repairs, replacements and operational time loss.

The order in which the system is plumbed will depend on the physical configuration of the site. For the purpose of this manual the mobilization procedure will be described in the chronological order of the system water flow. The following list is generalized and site specific adjustments may apply.

- **Connect the pretreat pump.** Any flotation devices should be connected to influent before placement in the water. Run the line from the water to the pump, then from the pump to the bottom header at the front of the treatment container. Tape on the headers in the system container indicates direction of flow.

- **Connect pretreat line between system container and pretreat retention structure.** A distance of at least 50 feet is desired to maximize the mixing of the chitosan and the stormwater. Water should be released into the retention structure above the surface.

- **Connect line from pretreat retention structure to sand filter pump.** The water intake line from the pretreat retention structure should be as far as possible from the point where the pretreated water is introduced to the structure. This placement will take advantage of the maximum possible settling time of the sediment.

- **Connect line from system pump to treatment container.** This line will go from the pump discharge to the influent header at the front of the treatment container. Tape on the header in the container indicates flow direction.

- **Connect line from middle header effluent to the sand filter.** A distance of at least 50 feet is desired to maximize the mixing of the

©Proprietary and Confidential. Property of Clear Water Services. All Rights Reserved ©

chitosan and the stormwater. This line will run to the top 6" header of the sand filter.

- **Connect line from bottom header of sand filter to treatment container.** This line will go to the discharge/recirc header at the front of the treatment container. Tape on the header in the container indicates direction of flow. This line will branch in to two effluent lines, each with an automated valve. The lower of these lines is the discharge effluent line. The top line is the recirculation line.

- **Connect discharge line.** This line will run from the container to the discharge location.

- **Connect recirculation line.** This line will run from the top effluent pipe and typically run into the primary retention structure. Consult the PM for site specific modifications.

- **Connect backflush line.** This line will run from the 4" header on the top of the sand filter to the separate backflush weir tank. This line should introduce water to the retention structure as far as possible from the pretreatment influent line to minimize uptake of suspended solids.

2.7 CHITOSAN DELIVERY SYSTEM

The chitosan deliver system consists of a chitosan storage container, secondary spill containment structure, metering pump, graduated cylinder(s) for calibration, static mixer, interconnecting tubing and valves. A secondary spill contaminant structure is required by regulatory agencies to provide containment in case of accidental spills. Consideration should be given to regular chitosan supplying procedures when installing the treatment system on site.

The metering pumps for the sand filtration systems are LMI Model C77 variable speed chemical metering pumps with high viscosity head assemblies. This pump is a variable-output, positive displacement metering pump with a flow rate range of 0-10 gallons per hour at 80 psi. These pumps are explicitly specified in the use level designations. Individual pumps are typically installed for the pretreatment and filter influent dosing.

PISTON SPEED AND DISPLACEMENT RATE SHOULD ONLY BE ADJUSTED WHILE PUMP IS IN OPERATION!

The capacity of a chitosan storage container in this system is roughly 500 gallons. The operational time frame of a storage container can last from several days to several months, depending on dose rate and the volume of water treated. Ball valves are installed on the chitosan delivery lines for meter calibration purposes. The static mixers installed on the pretreat and sand filter influent lines increases the mixing rate within the pipes. Incorporation of static mixers into Clear Water's CESF systems has reduced the

©Proprietary and Confidential. Property of Clear Water Services. All Rights Reserved ©

required chitosan contact time, the overall system footprint, and decreased chitosan utilization by 25 to 50%.

The total dose rate will stay above 0.55ppm no matter what the influent turbidity in order to prevent PCB breakthrough. The use level designation specifies a maximum allowable dose rate of 1ppm in sand filter influent. Under certain conditions DOE will increase maximum allowable dose rate to accommodate specific site conditions. Follow the bench scale treatability protocol to determine the likely dosage range.

2.8 WATER QUALITY MONITORING

Local, Regional, State (use level designation), and Federal regulations will determine the scope of water quality testing that must be performed on the site. Permit and SWPPP approvals from applicable environmental jurisdictions will typically state what testing must be performed, how often, and who should receive the results. These regulations will often effect system discharge location and volume.

The treatment system is designed to monitor effluent turbidity and pH, and to automatically divert flow from discharge to recirculation should these values exceed permit limits. Influent water quality parameters are also monitored by the system PLC but do not trigger any flow diversions.

Clear Water treatment technicians must calibrate system sensors on a twice monthly basis to ensure reliability of the automated process. Hand held meters must be checked and compared to the in-line meters on a twice monthly basis. This procedure is referred to as a Confidence Check.

In addition, because of observed scaling from iron and/or iron bacteria, a small automated cleaning system has been put in place for the inline turbidimeters. This cleaning system is necessary to avoid false high turbidity readings and unnecessary recirculation of stormwater for repeated CESF treatment. When one of the three sand filter systems ends its operational cycle, a small dose of a cleaning compound is added to the turbidimeter cuvette in order to prevent iron scaling of the glass wall of the cuvette. This dosage of cleaner is only a few milliliters, and the water in the cuvettes is automatically pumped back into the stormwater inlet weir tank for treatment by the system.

Other water quality parameters governed by local regulatory agencies must be monitored. Sample ports are provided in the system to take water samples for bench scale monitoring. The filter influent and effluent headers each have one sample port feeding into the system's flow-through water quality sensors. The influent port samples pure runoff or pre-treat water before it gets dosed for the sand filter. The effluent port samples water after if has been filtered but before it is discharged. Water sampled for residual chitosan tests and regular sampling for PCBs should be drawn from the effluent port during discharge for accurate results.

©Proprietary and Confidential. Property of Clear Water Services. All Rights Reserved ©

TREATMENT SYSTEM OPERATIONS

3.1 SYSTEM OPERATOR

The stormwater filtration system shall be operated, monitored and maintained by experienced water filtration personnel as required by the use level designation. The system operator should have previous training or should be trained during the first several days of operation under the guidance of an individual experienced in chitosan-enhanced water treatment systems.

3.1.1 Required Operator Qualifications

1) Minimum 1 year experience with, and sound working knowledge of, pressurized sand filtration systems.

2) Experience deploying and troubleshooting pressurized water pumping and piping systems.

3) Fundamental knowledge of stormwater discharge regulations for applicable region/locale.

4) Fundamental knowledge of water quality testing procedures for parameters applicable to the region/locale.

3.1.2 Required Operator Training

Classroom training (8 hours)

1) Stormwater regulatory framework and requirements

2) Stormwater treatment chemistry (chitosan, pH, coagulation, filtration, etc.)

3) Stormwater treatability (how to do jar testing)

4) Treatment system components and their operation

5) Troubleshooting

©Proprietary and Confidential. Property of Clear Water Services. All Rights Reserved ©

Field Training (40 hours)

1) Operating a treatment system

2) Entering data in the system operation log

3) Testing turbidity and pH

4) Optimizing chitosan dose rate

5) Water quality sampling and testing (turbidity and pH)

3.2 SYSTEM OPERATION SEQUENCE

The following sequence is intended to be a general outline for CESF operations, not a comprehensive protocol.

3.2.1 System Calibration and Inspection

1) Perform site and system inspection procedures (section 3.3). Examine system for obvious damage or malfunction. Unlock container and power up the system.

2) Verify sensors are working correctly. Read and record system volume totalizers in the Daily System Operation and Maintenance log. Record any other relevant system information.

3) Calibrate hand held pH, turbidity and conductivity meters.

4) Calibrate inline pH and turbidity meters.

5) Switch PLC to recirculation mode. Recheck manual valve orientation.

6) Start the filtration system pumps using system PLC screen and watch for proper system functioning.

7) Calibrate LMI pumps to deliver proper chitosan dosage.

8) Collect samples of sand filter effluent and perform the residual chitosan test.

If treatability issues arise, take a grab sample from the primary retention structure and perform bench scale treatability tests to determine likely chitosan dosage, pH requirements or other factors. Perform a water quality background check. This includes taking grab samples from the receiving water body and recording pH, turbidity and conductivity in the appropriate field log.

©Proprietary and Confidential. Property of Clear Water Services. All Rights Reserved ©

3.2.2 System Shut Down

In an emergency situation turn off all power to the system by turning the “knife” switch for the main power, located on the back of the control unit to the off position. When the power is off, close all valves on the tanks and the manual valves inside the control unit. Will eliminate any chance of electrical safety issues and minimize the amount water that could be flowing from the treatment system.

The main power switch will also be shut down any time there is electrical work being performed.

3.2.3 Freeze Protection

During cold weather conditions, certain precautions need to be taken to protect against freeze events. A freeze event could result in system component damage and/or operations loss.

In cases where the temperature will drop below freezing for a short period of time, the system will be set to “freeze” mode. The PLC will be programmed to start each system in series. Each system will go into recirculation, discharge and through a backflush cycle to ensure all lines stay free flowing and clear of ice.

In the event of a deep freeze event, where the temperature stays below freezing for multiple days and never goes above freezing, the following procedures will occur.

1) Valves on tanks will be closed to avoid water flowing into drained lines.

2) All conveyance lines should be drained. Frozen pipes could result in flow blockage and/or pipe fracture. Ball valves or hose bibs are likely installed on conveyance lines to drain water for freeze protection.

3) Sand filters should be drained. Bleeder valves on the top of the sand pods should be open to aid in filter drainage. Drain valves may be installed on the bottom header for more direct filter evacuation.

4) System Container should be kept heated at all times. Extreme cold conditions can cause instrument damage, plumbing damage and will affect the hydraulic performance of the chitosan. The properties of some of the chemicals may be compromised if they freeze.

   If base flow fills the vault during these events, an alarm will be sent to Clear Water personnel. An operator will go to the site, manually treat the water, and reset the freeze protection until the event is over.

©Proprietary and Confidential. Property of Clear Water Services. All Rights Reserved ©

3.3 SITE AND SYSTEM INSPECTION

A preliminary assessment should be made of the overall integrity of a job site upon arrival. Conditions may have changed at the site in such a way that affects treatment operations.

Overall site integrity: NBF is a busy and active airfield. Be aware of major projects and events such as road additions or removal, vegetation removal, sanitary facility location, site access points and heavy equipment operation.

Tank Level: Check tank level upon arrival. Report excessive tank levels immediately. Observe tank level prior to system startup and monitor level frequently during operation. Note both increases and decreases in tank level to assure efficient operation and automation.

Pipe Integrity: Check to see if all the conveyance lines are in working order. Surface pipes on sites are vulnerable to vehicle impact, vandalism, and environmental damage. Small stress cracks can become significant safety or operational problems when operating under pressure

Freeze Protection: Close all drain valves that may be affixed to water conveyance lines or the sand filter. These valves are left open to drain excess water from the lines in cold weather. Water expands as it freezes and PVC pipe becomes more brittle in cold weather. This combination can render a system inoperable.

Manually Operated Valves: Switch any manual valves to the proper position for site specific operations. Some valves associated with system operation are automatically controlled by the PLC. However, some systems may incorporate manual valves for pretreatment tanks, multiple retention tanks, or multiple discharge locations. If you are unsure about proper valve positions, contact the project manager.

Hose/Pipe Connections: Shut down protocol on some sites require operators to disconnect specific conveyance lines to drain the system. Assure all necessary conveyance piping and hoses are attached to appropriate system equipment.

Equipment Theft: Power cables, generators and hand tools are a frequent target of theft. Check to see if any operational equipment appears to be missing or tampered with.

Unlock Container: All Clear Water treatment containers are kept locked when company personnel are not present. Keys for all treatment containers will be provided by the PM.

©Proprietary and Confidential. Property of Clear Water Services. All Rights Reserved ©

Chitosan Injection System Valves: Ensure valves necessary for proper chitosan injection are open.

Sand Filter Bleeder and Drain Valves: Small bleeder valves at the top of the sand filter pods are typically left open for freeze protection to assist drainage of the sand filter. Make sure these valves and drain valves are closed before introducing water to the filter.

Sample Port Valves: Ensure sample valves are open and the lines are clear of obstructions.

Air Compressor: Turn on air compressor if it is turned off. Make sure the compressor breaker switch is on. Drain the compressor occasionally. Ensure that the drain valve is closed for operations.

Chitosan Volume: Asses the quantity of chitosan in the storage tanks. Site PMs need to be kept aware of chitosan levels so they can schedule a timely resupply.

3.4 FIELD DOCUMENTATION

A series of triplicate forms are provided in all the system containers for technicians to log the results of operational activities. Completion of these forms is necessary for compliance with Clear Water and regulatory procedures. A master form is to be filled out during every weekly site check. Additional forms may be filled out, as needed, depending on technician activities onsite.
All the forms have a field to record the project title, project number, project location and date in the header block. System operators should print and sign their name at the bottom of the sheet. If multiple operators are working in a single system container, the forms should be signed by the most senior operator. All fields on each form are to be completed. Fields are never to be left blank. Fields which do not apply to a particular site or system should be completed with the letters NA (not applicable).

CESF – Master Weekly Operations Form: This is the primary form used by Clear Water operators. The treatment flow totalizer numbers as well as the total volume treated and the total volume discharged for each system are recorded here. Flow totalizer numbers are also recorded for the vault pump, Manhole 130A pump, and the pretreatment pump, and compared to the previous week's reading, to verify proper pump function. Weekly calibrations will also be recorded on this form for inline meters and LMI pumps. Residual chitosan test results will also be recorded on the master form. This form is intended to summarize system activities and productivity. Regulatory agencies require an evaluation of system performance and water quality monitoring for all discharge periods. Other relevant operational information should be recorded here for reference by Clear Water staff.

©Proprietary and Confidential. Property of Clear Water Services. All Rights Reserved ©

Bench Scale Treatability Form: This form is used to record water quality data and the observed results associated with the bench scale treatability test. The procedure for this test is described within this manual. Visual observations should be recorded in conjunction with each dose adjustment. Additionally, a general assessment of the entire test should be recorded upon completion of the test.

Chemical Metering Pump Calibration Form: This form is used to record the LMI chemical delivery rate and calculate the treatment system dose rate. The chitosan calibration procedure is described within this manual. Chitosan injection pumps are to be calibrated weekly or whenever dose adjustments are made.

Residual Chitosan Test Form: This form is used to record the results and sample data associated with residual chitosan tests. The procedure for this test is described within this manual. This residual chitosan is to be performed weekly or whenever significant dose adjustments are made. Operating conditions that necessitate elevated chitosan dose rates may increase the residual chitosan testing requirements.

Manual Data Collection Form: This form is used to record inline water quality data (pH, Turbidity) as well as system pressure. Influent and effluent data should be recorded for each of these three categories. This form is not required, but can be helpful in organizing manual data while observing ongoing system functionality. In addition, this form can be used to record meter confidence checks.

Instrument Calibration Report Form: Clear Water's CESF systems have multiple water quality meters which need to be calibrated weekly. There are separate forms associated with inline pH meters, inline turbidity meters, and all the hand held meters. There are fields to record the strength of the calibration standard used, the initial meter reading, and the calibrated meter reading.

3.5 SENSOR CALIBRATION

The systems internal water quality sensors, as well as the hand held sensors, should be calibrated weekly during inspections. Log the calibration information for each instrument in the accompanying calibration form. Calibration of the sensors will help ensure accuracy of water quality monitoring.

Confidence Checks can be performed to confirm sensor accuracy. Hand held readings can be checked against inline readings during the residual chitosan tests. Confidence Checks can be recorded in the Manual Data Collection Form.

©Proprietary and Confidential. Property of Clear Water Services. All Rights Reserved ©

The manufacturer provided calibration procedures for each meter are included as an attachment in this manual. Additionally, the entire owner's manual for the hand held meters are included inside each treatment system. Calibration standards for the inline and hand held turbidimeters are included in the corresponding meter kits. Calibration standards for the inline and hand held pH meters are supplied within the treatment system containers. The calibration standard for the conductivity meter is supplied within the treatment system container.

3.5.1 Hand Held Meter Calibration

Hand held meters are to be calibrated weekly. A separate set of forms are included specifically for calibrating the hand held meters. These meters should be calibrated prior to the preliminary water quality tests. Follow the included manufacturer's instructions for proper calibration procedure.

3.5.1.1 Hand Held pH Meter

It is important to properly care for the pH meter probe. Irreparable damage to the probe commonly occurs due to simple neglect. pH probe storage solution and cleaning solution is included in the treatment system containers. Use the cleaning solution periodically or whenever its use appears necessary. Store the probe in probe storage solution whenever the meter is not in use. The tip of the probe should never be allowed to dry out. The probe should be rinsed with water between insertions of different standards or samples to avoid contamination.

3.5.1.2 Hand Held Turbidimeter

The included cuvettes for calibration standards and sample measurements need to be handled carefully. The readability of the glass cuvettes will be compromised if they get scratched. Avoid touching the cuvettes with your bare fingers and carefully remove smudges with laboratory wipes. The cuvettes can become stained if dirty samples are allowed to sit inside for an extended period. Always promptly empty samples and rinse the cuvettes with distilled water after use. Clean stained cuvettes with a gentle solvent.

Make sure the outside of the cuvettes are dry before inserting them into the meters. Introducing moisture into the meters will compromise sample reading and damage the meter.

Record the Initial Reading before calibrating the meter. Record the Final Reading after calibrating the meter.

3.5.2 Inline Meter Calibration

Inline meters are to be calibrated weekly. Record calibration data in the appropriate forms. Follow the included manufacturer's instructions for proper calibration procedure.

©Proprietary and Confidential. Property of Clear Water Services. All Rights Reserved ©

3.5.2.1 Inline pH Meter

Follow the probe care and usage instructions previously stated for the hand held meter.

Calibrate the pH meter by following the instruction on the “calibrate” section of the PLC screen. After calibration procedure, place the probe in a pH buffer solution to verify that the reading is accurate.

Carefully remove and replace probe from probe seat. Probe-amplifier lock points can be damaged if not removed gently. Cross threading is a common problem with the pH seats. Be aware of the O-ring gasket falling out when removing probe from pH seat. “Bleed” air out of pH probe fitting before putting the system back into “valves auto” mode.

3.5.2.2 Inline Turbidimeter

Follow the cuvette care and usage instructions previously stated for the hand held meter.

Be aware of condensation on the flow through cuvette when calibrating. Cold water in the cuvette and the warm air inside the treatment container will often promote condensation which would need to be wiped off before returning the cuvette to the measurement chamber.

Record the Initial Reading and Final Reading when in calibration mode.

3.6 PRELIMINARY WATER QUALITY TESTS

These tests are used to assess the conditions of the stormwater to be treated and the receiving waters. The technician may have to adjust treatment system operations based on the water chemistry results of these tests

3.6.1 Bench Scale Treatability Test

The bench scale treatability test lets the operator know of possible treatment problems prior to introducing water to the CESF system. Several factors can influence treatability, including pH (typically from concrete work onsite, or natural limestone), detergents, hydrocarbons, the presence of soil tackifiers such as polyacrylamides (PAMs) and guar in the runoff.

Conditions in the bench scale test are different than conditions inside the treatment system. For this reason different treatment outcomes may occur between bench scale tests and system operations.

The samples procured for this test should be representative samples from recent runoff, and should not contain sediment that would settle naturally (sand and rocks). On large

©Proprietary and Confidential. Property of Clear Water Services. All Rights Reserved ©

sites it may be prudent to collect multiple samples from different points on the site and perform separate tests.

3.6.1.1 Required Equipment

In order to perform this testing sequence, the following items are required:

- Properly calibrated pH meter
- Properly calibrated turbidimeter
- Properly calibrated conductivity meter
- One 1-liter sample glass beaker
- One 1-liter sample plastic beaker
- Chitosan acetate
- Pipette
- Stir rod

3.6.1.2 Perform the Screening Test

1) Retrieve a one liter grab sample of stormwater from the site retention tank with a plastic beaker.

2) Transfer the sample into a one liter glass beaker

3) Measure and record initial pH, conductivity and turbidity of sample in the appropriate field log.

4) If the sample does not have a pH reading conducive to treatment (6.5 – 8.0), carefully adjust the pH of the sample by adding small amounts of sodium bicarbonate or acetic acid until the sample reads a pH close to 7. Record the adjusted pH and note treatment method.

5) Add one drop of a known quantity chitosan to the sample.

6) Stir sample vigorously for one minute to assure dissolution.

7) Allow sufficient settling time and observe solution for the formation of small floc particles called pinfloc.

8) Grab a sample from the surface of the sample jar and record the turbidity.

©Proprietary and Confidential. Property of Clear Water Services. All Rights Reserved ©

9) Repeat steps 3 through 4, recording observations and dosage related to the appearance of floc and settling.

3.6.1.3 Interpreting the Screening Test

Visible sediment settling indicates that chitosan has coagulated the particles. The beaker may contain clear water on top, or be slightly cloudy, and there should be variation in coagulation amount between dose rates. The object of this test is not to produce completely clean, clear water in the beaker. Rather, it is to determine the most suitable dose rate for CESF treatment.

For planning purposes, the smallest effective dosage should be used as the initial dose rate.

If there is no change in sample appearance between doses it is assumed that there are treatability problems. This is rare, and may occur for different reasons which need to be investigated.

3.6.2 Receiving Water Quality Test

Receiving water quality tests are designed to measure if discharge from CESF operations is negatively impacting the receiving water body. Site specific conditions may force the system operator to amend or even abandon this test all together. Certain discharge points, such as municipal storm sewers or overland infiltration, make it physically impossible to obtain a sample for this test.

This test is designed for a linear flow water body such as a river or stream. The procedure for this test will be described for such a water body. PMs and treatment technicians may need to improvise sample collection procedures if site conditions are inconsistent with this assumption.

1) Take two 1-liter beakers to the discharge point to obtain grab samples. Take one sample several yards upstream and one sample several yards downstream of the discharge. Always wear nitrile laboratory gloves when taking grab samples. Operators must not place themselves in precarious situations to obtain a sample. NO JOB IS TOO IMPORTANT TO NEGLECT SAFETY CONCERNS!

2) Return samples to the system container to measure the water quality. Measure pH, turbidity and conductivity of each sample with hand held meters. Record the sample location, time and water quality data for the two samples.

©Proprietary and Confidential. Property of Clear Water Services. All Rights Reserved ©

3) After several hours of operation, return to the system discharge point and take one sample from each of the previously identified locations. Return these samples to the system container to measure water quality. Record the water quality data along with the location(s) and time(s).

4) Compare the two data sets. Ideally there will be a negligible difference between the data sets. If there is a significant difference between the two data sets, it should be recognized as evidence that system operations are impacting the receiving water body. Operators should notify their project managers in such a case.

3.7 PUMP ACTIVATION

Operators should always verify all manual valve positions to ensure the pressurized water has a clear and proper path of entry and exit through the treatment system. Closed pathways will dead head the pump which can lead to equipment damage and/or safety concerns.

Attention should be paid to the water levels of the primary and (if applicable) secondary retention structures. Pretreatment should be momentarily delayed if the secondary cell is full. Filter treatment should be delayed if the secondary cell is empty. Overflowing retention structures can result in stormwater runoff violations. Pumping of a dry retention structure can cause pump damage. Pretreatment and primary pumps often do not deliver water at the same rate. Treatment technicians should continually check tank levels and pump flow rates and adjust pump operation accordingly.

3.7.1 Pump Activation Procedure

1) Open the automated recirculation valve by pressing the “Recirc Valve On” button on the Main Screen window of the PLC. Visually confirm that the valve has opened.
2) Toggle over to the secondary Main Screen window by pressing the yellow and blue arrow on the bottom of the screen. All the buttons on this screen supply power to individual pumps.
3) Switch on pretreat and/or main pumps, based on retention structure(s) water level by pressing the “External Pump On”/”Internal Pump On” button(s) accordingly.
4) Switch on the corresponding pretreat and/or main LMI pumps by pressing the “Ex LMI Pump On”/”In LMI Pump On” button(s).
5) Check associated components as water begins to run through the treatment system including, air compressor, backflush control box, flow meters, and flow through sample lines.
6) Observe pressure gauges to assure the CESF system reaches an acceptable operating pressure.

©Proprietary and Confidential. Property of Clear Water Services. All Rights Reserved ©

3.8 SYSTEM OPTIMIZATION

CESF systems usually take several minutes to reach full operating pressure after pump activation. Clear Water technicians should take this time to confirm proper system operation. Systems which have been operated recently and frequently will generally reach optimum operating conditions soon after pump activation. Systems which are starting up for the first time or have not been operated for a long time will require some adjustments to reach optimum operating conditions.

3.8.1 System Optimization Procedure

1) After pump activation, confirm that the air compressor is receiving power and delivering the proper pressures. Compression chamber pressure should be 100+ psi and line pressure should be 60+ psi
2) Visually confirm water discharge. Walk over to the discharge (recirculation) point to observe this. No water or decreased water flow indicates possible system breach.
3) Confirm that the flow sensors are working. There are different types of flow sensors and the reason for failure may differ. If the flow meter is not registering flow but system flow is evident, the sensor may need to be inspected. This process involves system shut down, water main evacuation and removing the meter for inspection.
4) Confirm backflush control box is powered. The backflush control box automates all backflush operations. Loss of backflush will result in filter sand bed impaction. Check main power, breaker switch and power cord if box is not powered.
5) Confirm sample line flow. Polyethylene tubes which convey the water quality samples should dispel water through one of the penetrations in the container. No outflow from these tubes indicates the water quality readings are not representative of the treated stormwater. Check for proper valve orientation and/or clogged lines.
6) Optimize flow rates. The maximum discharge flow rate for a specific site will be specified in the Stormwater Treatment Plan. Adjust manual valves to achieve desired flow rate.
7) Optimize system pressure. Optimal system pressure depends on the specific system and will vary from site to site. Variables such as pump capacity, plumbing configuration, filter size, discharge rate and water treatability will all affect system pressure. Typical system pressure should range between 30 and 45 psi. System pressures can be as low as 20 and as high as 50 with no operational impediments. Opening the influent valve will increase system pressure and increase system flow. Opening the effluent valve will decrease system pressure and increase system flow.

©Proprietary and Confidential. Property of Clear Water Services. All Rights Reserved ©

3.9 pH TREATMENT

Although pH treatment is not included in all CESF treatment regimens, it is not unusual. Many of the sites that require pH treatment require it on a consistent basis while other times it may be sporadic or short term.

pH treatment is required for regulatory and operational purposes. These two requirements are not necessarily unrelated.

Regulatory requirements dictate runoff discharge must have a pH between 5.0 and 9.0. Many aquatic species are very sensitive to pH alterations and even a small alteration can have a significant effect on a natural system.

Stormwater pH must stay in the same range for CESF treatment. The chemical reaction which facilitates chitosan flocculation is optimized within this range. Outside of this range, the effectiveness of chitosan as a flocculent is severely compromised.

pH treatment for CESF systems is generally done with one of two chemicals. Sodium Bicarbonate raises low pH and CO_2 lowers high pH. Beware of over correction. Adding too much chemistry for pH correction will render water untreatable.

SODIUM BICARBONATE: Adding Sodium Bicarbonate to acidic water (pH below 7) will raise the pH to a treatable level. Sodium bicarbonate is typically supplied to CESF system operators in 50 lb bags. It is most effective to add the chemical to a point in the system where it can be physically disturbed and dissolved. The point where pressurized water is discharged into a settling pond would be an ideal location.

CO_2: Adding CO_2 to caustic water (pH above 7) will lower the pH to a treatable level. CO_2 is supplied to CESF system operators in the form of dry ice or in a compressed gas or cryogenic tank. Dry ice is most effective when introduced to a retention structure near the region of pump uptake, right before chitosan is injected. Cryogenic tanks are normally supplied when pH treatment will be a regular process and there will be a dedicated “sparge” tank for gas injection.

3.10 LMI CALIBRATION

Clear Water technicians will calibrate the chemical metering system weekly to ensure that the dose rate is above 0.55ppm and below 1.0 ppm at all times. Additionally, the metering pump shall be recalibrated when a significant change occurs in either the flow or influent turbidity. Calibration results and flow rates will be recorded on the CESF system monitoring forms and the calibration records will be kept onsite.

OPERATIONAL NOTE: LMI pump dials should **ONLY** be adjusted when pumps are **OPERATIONAL.** Adjusting pump dials while pump is not running will likely result in pump damage and/or failure.

©Proprietary and Confidential. Property of Clear Water Services. All Rights Reserved ©

When adjusting the metering pump to obtain proper dose rate, there are two primary adjustments: stroke frequency and stroke length. Experience has shown that the stroke frequency should be set as high as possible for a consistent rate of delivery, and then the stroke length adjusted to deliver the desired dose rate.

Some CESF chemical injection systems have a dedicated delivery line for each pump, while other systems have multiple pumps connected to the same line. Operators should consider the design of the injection system being calibrated when executing this procedure. Systems that have multiple pumps plumbed to the same line will require the operator to isolate the unmeasured pump from the system during calibration.

Upon initiation of this procedure, the valve on the chitosan storage tank should be open and both system pumps and chitosan delivery pumps should be operating.

Calibration Procedure:

1) Fill the calibration cylinder by opening the valve on the bottom of the cylinder. Fill the cylinder as close to full as the static head pressure on the storage tank will allow without over filling.
2) Close the valve on the chitosan storage tank.
3) Allow the LMI pump to drain the cylinder to a desired volume and then begin timing the pump for one minute.
4) Close the cylinder valve at exactly one minute.
5) Immediately open the valve on the chitosan storage tank
6) Read and record the volume of chitosan consumed
7) Calculate the dose rate using the calculation table below. Pair the chitosan consumption rate with the corresponding stormwater flow rate.
8) Convert delivery rate from ml/min to mg/min (multiply result by 15 for 1.5% chitosan) and flow rate from gal/min to L/min (multiply by 3.78). Divide chitosan delivery rate by flow rate to get does rate (ppm). Refer to formulas presented below.
9) Adjust delivery rate toward desired dose rate* if necessary and repeat procedure until proper dosage is achieved.
10) Record the final results in the Chemical Metering Pump Calibration Form.
11) Repeat procedure for next LMI pump.

1. Liqui-Floc delivery rate (ml/min) x 0.015 (chitosan concentration) x 1g/ml (weight of Liquid-Floc) = absolute weight of chitosan in g/min
2. Chitosan delivery (g/min) x 1000 (mg/g) = delivery rate (mg/min)
3. System influent flow (gpm) x 3.78 L/gal. = flow rate (L/min)
4. Delivery rate (mg/min) / flow rate (L/min) = dose rate in mg/L = ppm

When the LMI calibrations are complete, verify the valve on the chitosan storage tank is open and the valve on the calibration cylinder is closed. Verify that all LMI pumps are on.

©Proprietary and Confidential. Property of Clear Water Services. All Rights Reserved ©

Record the dose rate of the pretreat pump and the sand filter pump separately. Add these two dose rates together to get the overall system dose rate. The overall system dose rate should not exceed the maximum allowable chitosan dose rate (1 ppm).

***** The desired dose rate depends on many variables including site and system history, turbidity levels, use level designation limits, water chemistry, flow rate and pre-treatment activity. Typically an operator should dose the minimum amount necessary to achieve the desired result.

3.11 RESIDUAL CHITOSAN TEST

High doses of chitosan in the aquatic environment have exhibited toxic effects on fish in laboratory tests. In the CESF process, the majority of the chitosan introduced into stormwater is consumed during the coagulation/flocculation process. The residual chitosan test was developed to confirm the concentration of chitosan in the treated effluent is below the 0.2mg/L environmental threshold. The residual chitosan test is used as a precautionary measure to alert technicians of potential treatment problems before significant impacts can occur.

The Dept. of Ecology approves procedures for residual chitosan testing for each distributor of chitosan acetate. One example, “Colorimetric Determination of Residual Chitosan in Treated Stormwater”, is included as an attachment to this manual. The following procedure was produced as a quick reference for Clear Water technicians with considerations given to company specific equipment.

Residual chitosan tests will be conducted weekly, or any time the chitosan dose rate is significantly changed.

3.11.1 Required Equipment

There should be two separate, clearly marked, sets of equipment. One set will be used for the sample analysis and should be marked “sample”. The second set will be for the matrix spike used for a color comparison. The second set should be marked “spike”.

- Two stir rods
- Two 140 mL capacity plastic syringes with threaded tip
- Two threaded plastic Swinnex filter seats
- Two plastic 1L beakers
- 1 pair of forceps
- 10 microleter allotment pipette

©Proprietary and Confidential. Property of Clear Water Services. All Rights Reserved ©

- fiberglass micro filters
- Chemicals: 1.5% chitosan acetate, 0.1N solution Iodine, Sodium Bicarbonate (with scoop)

3.11.2 Procedure

Make sure all equipment is washed thoroughly and proper laboratory procedures are followed. Most "hits" produced in this test are actually false positives that are due to contaminated equipment.

1) Take 2 separate 1 liter samples from the sand filter effluent sample line.

2) Measure and record pH, turbidity and conductivity in the Residual Chitosan Test Monitoring Form. Transfer all relevant data from the LMI calibration to this form.

3) Add two drops of 1.5% chitosan acetate to the beaker marked "spike". Stir vigorously for 1 minute to assure dissolution. This beaker now has a chitosan concentration of approximately 0.2 ppm.

4) Add one scoop (approximately 5 grams) each of Sodium Bicarbonate to the sample and the 0.2 ppm spike sample. Stir vigorously for one minute. Read and record the adjusted pH. The new pH level must be at 8 or above to cause the chitosan to come out of solution.

5) Open the Swinnex filter seats and carefully place clean filter papers in each one with a pair of forceps. Carefully thread the seats back together. Avoid cross threading the seats for proper filter dosing.

6) Draw 100 mL of the treated sample water from the "sample" beaker into the "sample" syringe. Thread the "sample" filter seat on to the syringe. Slowly push the sample water through the filter. Repeat with another 100 mL (200 mL total). Repeat procedure with "spike" sample.

7) Remove the filter seat from the syringe and then remove the filter from the seat with forceps. Remove the sample first and the spike second to avoid contamination.

8) Place each filter on a clean, inverted glass beaker to dry. Place the beaker a reasonable distance in front of a space heater to facilitate drying. Dry completely for optimum results.

9) After the filters are dry, add one drop of iodine to each filter. Wait 15 minutes to interpret results.

©Proprietary and Confidential. Property of Clear Water Services. All Rights Reserved ©

10) A light yellow rust color indicates the absence of chitosan. This is how the sample should appear. A dark brown or blue/black color indicates the presence of chitosan. This is how the spike sample should appear.

If an operator gets a positive test the system will immediately be shut down and investigated to determine if any of the operating parameters are out of specification. The system can then be corrected and the filtrate retested to confirm the absence of chitosan in the treated filtrate.

3.12 SYSTEM DISCHARGE

After the inline water quality readings are within discharge limits and initial LMI pump calibrations have been performed, the CESF system is ready for stormwater discharge. Access the Main Screen on the PLC and press the “Valves Auto” button. This will prompt the system to open the discharge valve and close the automated recirculation valve. The system will continue to direct all water through the discharge line as long as the pH and turbidity readings are within the programmed discharge limits.

The automated valves should be visually inspected periodically to confirm proper operation. Valves that do not fully actuate pose potential safety and/or equipment damage concerns. The discharge point should be visually inspected periodically for possible erosion, especially during the initial periods of operation.

3.13 BACKFLUSH

Backflushing is the process by which water flow is reversed through the sand beds to expel the accumulated sediment on the top of the beds. Each sand pod is flushed one at a time while the rest of the pods in the filter continue to operate normally. The stormwater which was filtered from the active pods will fill the bottom header and a portion of it is forced upward through the pod that is being backflushed.

Although backflush cycles are automated, the process needs to be understood and evaluated by the system operator. The backflush parameters are set from the control box which is fixed to the side of the sand filter. Flush duration, delay between switching pods, manual start and stop as well as power and breaker switches are all on the control box. The cycle timer knob should be set to zero as backflush cycle initiation is typically controlled through the pressure differential switch on the bottom of the control box.

Typically, at a pre-set pressure differential, the controller will initiate a backflush cycle to remove the captured floc from the media bed. As the filter beds become clogged with floc particles the pressures between the top and bottom headers begin to deviate. The top header will gain pressure and the bottom header will lose pressure due to decreased water passage. When this pressure differential reaches a set level, the

©Proprietary and Confidential. Property of Clear Water Services. All Rights Reserved ©

system will initiate the backflush cycle. The differential is generally set around 8 psi but will vary from system to system.

The system requires a minimum of 20 psi effluent pressure for adequate backflush. Pressures below this will generally not be high enough to fluidize the sand beds, which is necessary for proper backflush. System pressures and flow rates will differ between operation and backflush cycles. Operators must monitor flows and pressures during transition to backflush to assure they remain optimal. Valve adjustments may need to be made accordingly. In addition to the influent and effluent control valves there is a valve at the end of the backflush header. This valve is set during system start up to optimize backflush flow without discharging filter media. This backflush valve generally does not need adjusting and should only be adjusted by experienced operators who are familiar with that particular site.

A site glass is installed at the top of the backflush header to monitor backflush efficiency. The water in the site glass should appear turbid during the initial stage of each pod flush. Toward the end of the flush the water should appear clearer as all of the floc is expelled from the sand bed. Some systems are equipped with backflush sample lines which can also be used to monitor the effectiveness of the backflush. Flush duration should be set at two minutes. To increase backflush intensity, operators should increase the frequency instead of duration of the cycle.

The consequence of insufficient backflushing is impacted sand beds. Failure to backflush will cause excess floc accumulation in the filter. Excess floc under operating pressures will cause the beds to compact, limiting water movement through the beds. This is commonly called impaction. Impaction will force a system shut down. The water in the filter must be evacuated, the filters will need to be opened and the sand in the filter must be broken up with a shovel. In extreme cases the filter medium may be so compromised that it will need to be discarded and replaced.

3.14 SYSTEM SHUT DOWN

System shutdown will be necessary at certain times for system maintenance, calibrations, etc. Project Managers should communicate site specific concerns directly to technicians or through site documents. The following checklist covers the range of typical tasks that need to be completed when shutting down a CESF system.

1) Switch pneumatic valve from “auto” to “recirc” by pressing “Recirc Valve On” on the PLC.

2) Switch LMI pumps off on the PLC.

3) Switch pretreat and main pump off on the PLC.

4) Visually and audibly confirm pump shut down.

©Proprietary and Confidential. Property of Clear Water Services. All Rights Reserved ©

5) Record final totalizer readings on the daily operations form. Record any operational anomalies your PM may be concerned about. Record system operation assessment and certify acceptability of operation. Communicate significant system upsets or concerns directly to the PM.

6) Finish all paper work. Remove the pink slips from the operations form and place in the appropriate folder. Return remaining copies to the PM.

7) Drain air compressor.

8) Clean laboratory bench top and system container.

9) Close chitosan tank valve. Close sample port valves. Open sand filter bleeder valves to aid the drainage of the sand filter.

10) Empty, rinse and replace inline cuvettes. Remove and clean inline pH probes. Immerse probes in proper storage solution.

11) Perform any necessary freeze protection procedures. Leave heaters, container and generator switches in “Auto”

12) Switch sensors off on the PLC. Close automatic valves on the PLC.

13) Turn off all lights and any extraneous power from the container.

14) Secure the site and lock the system. Any valuable equipment should be locked up to discourage theft.

Clear Water staff should leave all PPE on until they have entered their vehicle to leave the site. Yield to all heavy equipment when driving onsite. Obey all traffic control instructions.

©Proprietary and Confidential. Property of Clear Water Services. All Rights Reserved ©

CONTROL SYSTEM OPERATION

This section is designed to teach Clear Water technicians how to use the control interface for the CESF systems. This is dedicated to the control system operations and does not include operating procedures for the mechanical parts of the system. The control system is commonly referred to as the programmable logic controller (PLC). The system is designed to simplify technician procedures while ensuring compliance with regulatory requirements for CESF operations

4.1 TOUCH SCREENS

When the touch screen first comes on it will display the alarm screen. Given that multiple alarms (of the same or different types) could have occurred since the last time the system was operational, a series of alarms may need to be acknowledged. Acknowledge alarms by pressing the “Ack All” button. Be sure to check the Alarm Screen before you begin operations.

Once all the alarms are acknowledged, the Logo (or Startup) screen will appear. This screen is for informational purposes only. Touch the “Main” button to access into the operational screens of the program.

©Proprietary and Confidential. Property of Clear Water Services. All Rights Reserved ©

The screens are color coded and can be accessed by the file tabs at the top of the screen. The types of screen are; Main, Alarm, Water, Status, and Configuration.

"Main" screens are where system control takes place. There are two "Main" screens, for operations. The "Main" screens are laid out in a columnar fashion. The top button on each column puts that component into Automatic mode governed by the specific operational parameters that have been preset for it. The "On" button turns that component on with all safety and internal checks overridden for that particular component. The "Off" button disables that component. The primary main screen controls all system pumps.

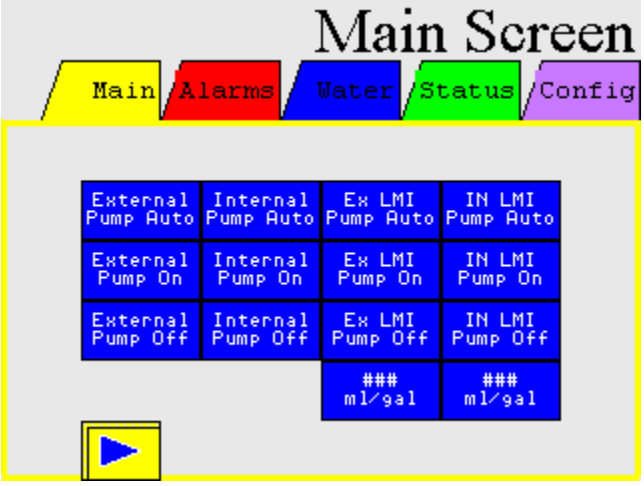

The yellow and blue arrow button at the bottom of the screen lets operators to toggle back and forth between the two main screens.

The secondary main screen controls system sensors, automated discharge valves, heaters and the system modem. In most situations the modem and heater controls should always be left in "Auto". These buttons will change state based on what the PLC is trying to do not necessarily what the system is actually doing. *Example: You push the button to open the Discharge Valve but there is no air pressure. The PLC is trying to open the valve so the display will blink "Disc Open" yet the valve is still closed.*

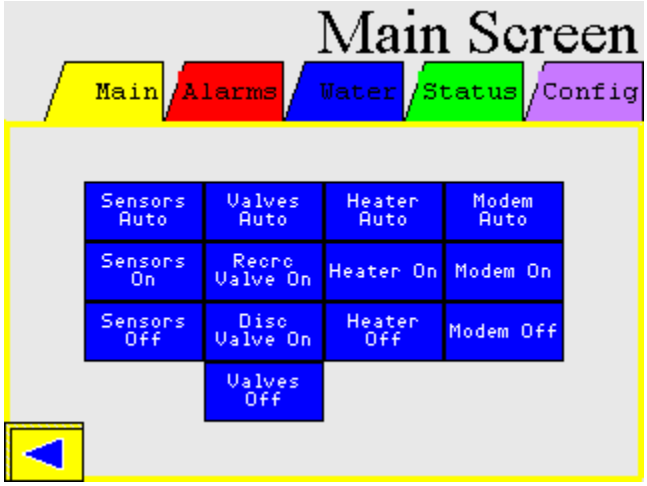

Some sites may not have some components. In such cases columns identifying unused components will be blank.

©Proprietary and Confidential. Property of Clear Water Services. All Rights Reserved ©

The “Alarm” screen displays emergency status information requiring immediate attention. All alarms on this screen that contain the word “Faulted” have to be cleared using the “Reset” button and are impeding operation of the system in some fashion. Alarms that do not contain “Faulted” warnings are for information only and do not require manual reset.

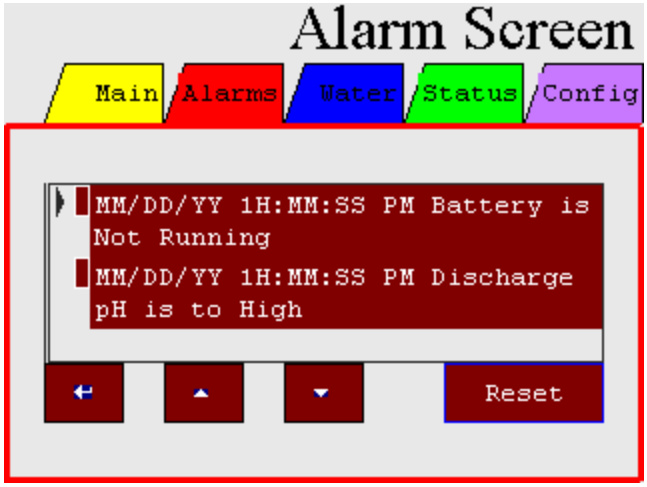

The “Water” screen is designed to display the water quality and system hydrology data. The data in the left hand column displays influent data and the column on the right displays effluent data. It alternates between current data and the running system recordable data. To know which you are looking at see the top left hand corner of the matrix.

The arrow button in the lower right hand corner will take you to the “Last Saved” screen.

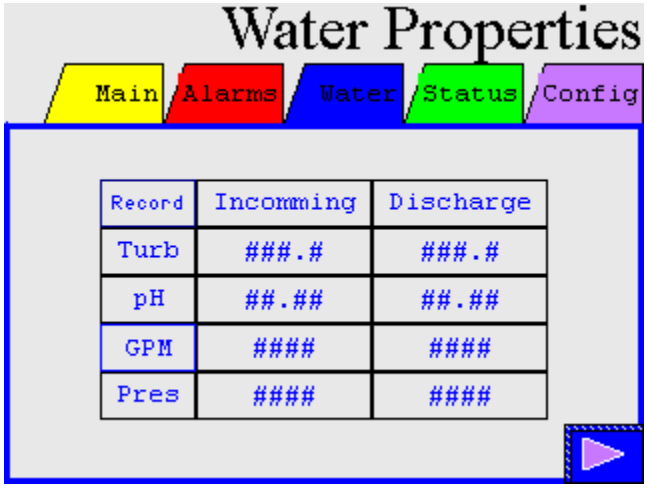

The “Status” screen is a graphical display that is designed to give the operator a real-time flow diagram of system operations.
The water level in the “Pond” and “Tank” corresponds to the actual levels in those facilities. Pumps are green for on and red for off, with a large X indicating a fault. The sand filter modules change from gray, off; to blue, on; to green, back flush. The valves will change direction based on the current status of the system.

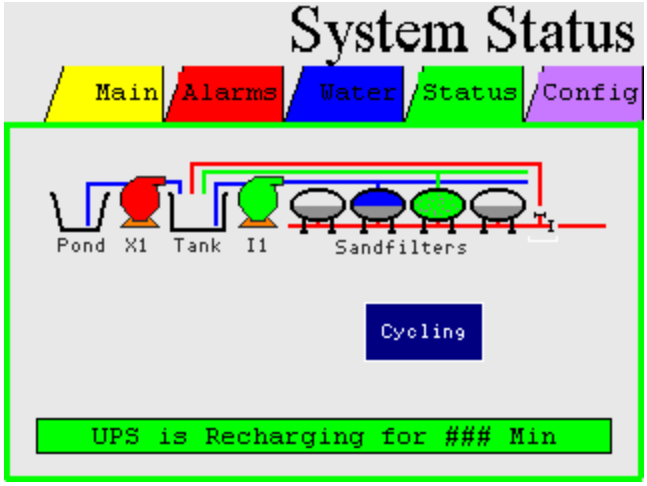

The main configuration screen sets the discharge limits for that particular site. These limits are preset and should not be changed by operators.

©Proprietary and Confidential. Property of Clear Water Services. All Rights Reserved ©

The pH and turbidity alarms identify the meter readings which will display visual alarms on the stop system discharge.

“Dis Delay” is the amount of time the treated water must be within spec before the PLC will allow discharge during automatic operation.

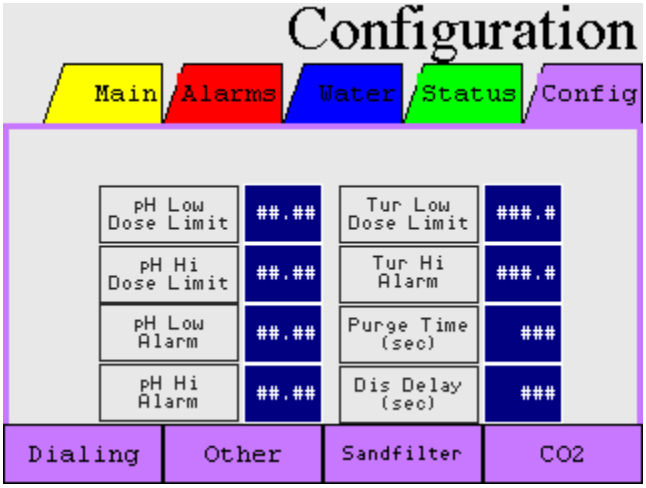

The second configuration screen is used to select emergency text message recipients. Each one allows you to cycle through the list of possible recipients just by touching the name multiple times. Four individuals can be selected Project Manager, Primary Responder, Secondary Responder, and Engineer. This screen also contains a test broadcast button. This allows you to test the text message system. If “None” is selected in a given box the PLC will skip that individual to call.

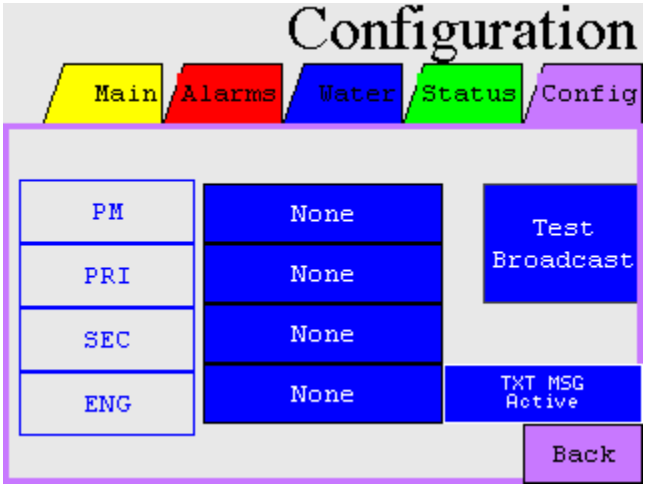

©Proprietary and Confidential. Property of Clear Water Services. All Rights Reserved ©

4.2 ALARM GLOSSARY

Discharge Turbidity is too High: The discharge Turbidity reading the PLC is receiving from the Turbidity meter on the discharge header is greater than the Turbidity Hi Alarm value set in the configuration screen.

Influent Turbidity is too High: The Turbidity of water going to the sandfilter is reading above the PLC Hi Alarm value set in the configuration screen. If the turbidity is too high, the water may not be suitable to be directed to the sandfilters and a technician may need to investigate more pretreatment methods.

Tank Level is too High: PLC is receiving a signal from the Tank Level transducer that the water level is higher than the preset high limit. This will force the pretreatment pump to stop pumping water to the 3 tanks

Pond Level is too High: PLC is receiving a signal from the pond (weir tank) Level transducer that the water level is higher than the preset high limit. This will force the vault pump to stop pumping water to the treatment system.

15 Minute Recirculation Mode: Treatment system has been recirculating for more than 15 minutes.

Generator Failed to Start: The treatment system has lost power.

Internal Pump Faulted: PLC sent a start signal to the Soft Starter and has not received an Up to Speed signal back for 30 seconds.

External Pump Faulted: PLC sent a start signal to the Motor Contactor and has not received an operational signal back for 30 seconds.

Max Pressure Exceeded: One of the Pressure Transducers sent a signal to the PLC that exceeded the 60 PSI Maximum Pressure Setting and shut down the Pumps.

Low Minimum Pressure: One of the Pressure Transducers sent a signal to the PLC that exceeded the 10 PSI Minimum Pressure Setting and shut down the Valves and the Pumps.

Low Flow: One of the flow meters sent a signal to the PLC that the pumps were running full speed, but there was no flow being registered.

Low Control Unit Temperature: The system thermostat sent a signal to the PLC that the temperature has dropped below 40 degrees.

©Proprietary and Confidential. Property of Clear Water Services. All Rights Reserved ©

ATTACHMENTS

Attachment 1 _____ Inline Turbidimeter Calibration

Attachment 2 _____Inline pH Meter Calibration

Attachment 3 _____ Residual Chitosan Test

©Proprietary and Confidential. Property of Clear Water Services. All Rights Reserved ©

5.2 Calibration Procedures

1. Select the calibration function of the instrument by pressing the **MODE/EXIT** button once. The arrow beside **CAL** will be illuminated on the display. The lower display shows alternating **1000** (the value of the standard that is requested) and ↵. The upper display shows the real-time reading to allow the standard to be indexed. Refer to section 6.1 for information on indexing cuvettes.

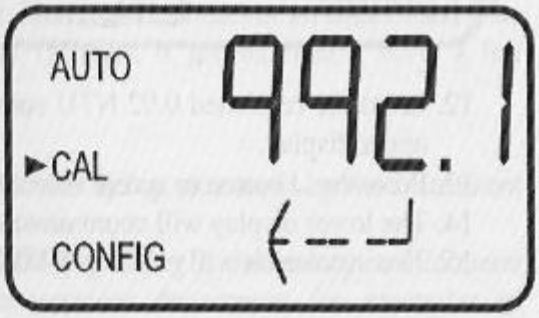

2. Remove the flow through unit.
3. Insert the requested 1000 NTU standard. Index the standard to the lowest value on the upper display.
4. Press the ↵ button to accept the calibration.
5. The lower display will count down the progress of the calibration step.
6. The lower display will now change to show alternating **10** and ↵, requesting the 10.0 NTU standard.

7. If the alternating **10** and ↵ is not displayed, push the ▲ or ▼ until this display is shown.
8. Insert the requested 10.0 NTU standard. Index the standard to the lowest value on the upper display.
9. Press the ↵ button to accept the calibration.
10. The lower display will count down the progress of the calibration step.
11. The lower display will now change to show **02** and ↵, requesting the 0.02 NTU standard.

©Proprietary and Confidential. Property of Clear Water Services. All Rights Reserved ©

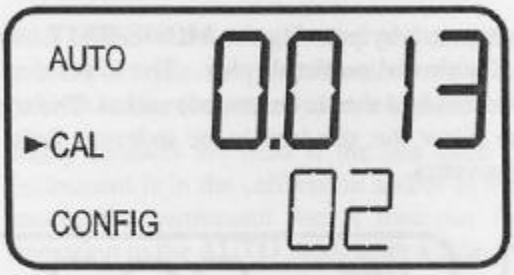

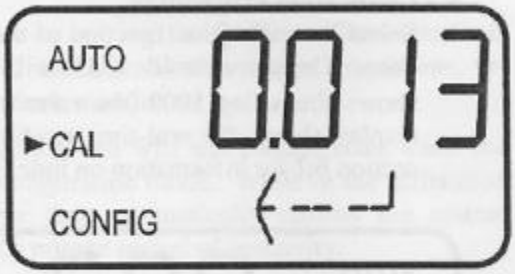

12. Insert the requested 0.02 NTU standard. Index the standard to the lowest value on the upper display.
13. Press the ↵ button to accept the calibration.
14. The lower display will count down the progress of the calibration step.
15. The instrument will return to **AUTO** mode at the end the calibration.

Note: During calibration, the fan inside the instrument is turned off to extend the life of the desiccant. The fan will be turned on during calibration countdowns and after returning to the AUTO mode or after five minutes, which ever comes first. It is recommended that the measurement chamber be kept covered during the calibration period and that the flow through cuvette be replaced immediately after the calibration to prevent premature saturation of the desiccant.

5.3 Calibration Error

If the screen shown below, is displayed after calibration, the internal diagnostics have determined that the calibration standards were either bad or that they were inserted in the wrong order. Either check the standards and recalibrate or restore the factory calibration see 6.2 *Restoring Factory Settings*. The instrument cannot be used without performing one of these operations.

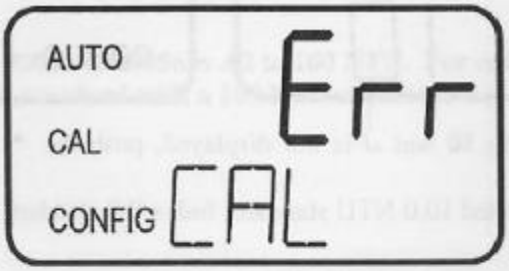

To recalibrate press the MODE key and start the calibration sequence again. To restore the factory calibration, push and hold the ▲ button. Now push and release the ↵ then release the ▲ button.

©Proprietary and Confidential. Property of Clear Water Services. All Rights Reserved ©

EASY CAL Procedure - pH

- This procedure simplifies system calibration using standard 4.0, 7.0, 10.0 pH buffers only. If these pH buffers are not available, calibrate the system via the CALIBRATE menu, using the STANDARD and SLOPE settings.
- Access the CALIBRATE menu and set sensor temperature before performing EASY CAL for new electrode installations.
- Access EASY CAL menu from the view menu.

EASY CAL: ---- Enter Key Code	Press UP, UP, UP, DOWN buttons in sequence to enter menu, XXXX will appear during code entry.

To Calibrate:	Response:	To Accept:
Place Sensor in pH Buffer #1 Place electrode tip in first pH buffer pH 7.0 = 0 mV pH 4.0 = 177 pH 10 = -177 Limit ± 50 mV	6.90 pH -005 mV Allow for stabilization 30 seconds*	6.90 pH -005 mV ENTER to accept 7.00 pH -005 mV
Place Sensor in pH Buffer #2 Place electrode tip in second pH buffer.	3.93 pH +179 mV Allow for stabilization 30 seconds*	3.93 pH +179 mV Press ENTER to accept second buffer calibration. 4.00 pH +179 mV
To exit menus and return to VIEW press UP and DOWN button at the same time	Display returns to VIEW Menu in 10 minutes or when ENTER is pressed	Good Easy Cal Press <ENTER>

Theoretical mV values

pH @ 25°C	mV
2	+296
3	+237
4	+177
5	+118
6	+59
7	+0
8	-59
9	-118
10	-177
11	-237
12	-296

©Proprietary and Confidential. Property of Clear Water Services. All Rights Reserved ©

Colorimetric Determination of Residual Chitosan in Treated Stormwater[1]

Field Test

Background Chitosan-Enhanced Sand Filtration has proven to be a safe and effective treatment technology for the purification of stormwater. Chitosan has been tested extensively to determine its aquatic toxicity and stormwater treated with chitosan has also been tested and found to have no effect on fish and daphnia. Because concentrated chitosan does exhibit significant toxic effects on rainbow trout in clean laboratory water, it is important to know if there is chitosan in the stormwater after treatment and filtration. A review of the 15th edition of Standard Methods and EPA's test method manual (SW-846) revealed no test methods for low-level chitosan acetate analysis in water. 10 major analytical laboratories were consulted also and none were able to test for low-levels of chitosan acetate. Consequently, Cascade EcoSolutions developed the following colorimetric iodine spot field test for the semi-quantitative analysis of chitosan.

It is important to note that this is a screening field test which is used to alert the treatment system operator in the event of a positive test result. This test is only designed to detect the presence of greater than 0.20 mg/L (200 µg/L) chitosan in the treated filtrate, not to quantify that presence. If an operator gets a positive test the system can then be investigated to determine if any of the operating parameters are out of specification. The system can then be corrected and the filtrate retested to confirm the absence of chitosan in the treated filtrate. This is the purpose of the test.

1. PRINCIPLE AND APPLICABILITY

Principle. This method is based on the well-known reaction between iodine and polysaccharides (chitosan is a natural polysaccharide). When iodine is added to a chitosan sample the original iodine yellow-rust color will change to a deep blue-black color indicating the presence of a polysaccharide (see Figures 1 and 2). The chitosan used for water treatment (ChitoVan™) is fully water-soluble chitosan acetate (chitosan dissolved in acetic acid). This test methodology requires the precipitation of residual chitosan acetate (in the sample) with sodium bicarbonate with subsequent filtration to capture the precipitated chitosan on a one-inch diameter glass fiber micro filter. Because the residual chitosan concentration is estimated to be less than 0.2 mg/L in treated filtrate, 200 mL of water must be filtered through the one-inch diameter glass fiber micro filter in order to concentrate enough chitosan to react with the iodine (a minimum of 40 micrograms). The pH of the water sample is increased to > 8 to precipitate any chitosan present[2].

After filtration, the filter paper is used for the colorimetric test (one drop of iodine is placed on the filter paper). This test is semi-quantitative and is designed only to confirm the absence of chitosan in stormwater treated with chitosan. There is no way to determine the exact concentration of chitosan in the event of a positive reaction except to estimate >0.2 mg/L.

---

[1] Analytical test method developed by JW Macpherson, Natural Site Solutions LLC

[2] Chitosan acetate precipitates at pH 8 and above - Vanson HaloSource, Inc. 2004

©Proprietary and Confidential. Property of Clear Water Services. All Rights Reserved ©

1.2 Applicability. This method is applicable for the semi-quantitative analysis of chitosan in stormwater treated with chitosan. It has been developed as a field test that can be quickly and easily performed in a contractor's trailer on a construction site.

2. RANGE AND SENSITIVITY

The lower limit of detection is approximately 0.2 mg/L (0.2 ppm) with a water sample volume of 200 mL. The maximum of the range is essentially unlimited.

3. INTERFERENCES

3.1 Polysaccharides other than chitosan (such as guar) have the potential to interfere by false positive. Interferences may be screened by testing the influent water for polysaccharides prior to treatment. Chitosan is the only polysaccharide introduced to the treatment system. Based on field experience, polysaccharides are not present in natural waters or stormwater detention basins at a concentration high enough to interfere with this test method.

3.2 Another potential interference is the accumulation of dirt particles on the glass fiber filter. To reduce this problem the water to be tested (treated filtrate) must be 10 NTU or less. Chitosan-enhanced sand filter systems typically produce treated filtrate less than 10 NTU.

4. PRECISION AND ACCURACY

See QA/QC section.

5. APPARATUS

5.1 Sampling Apparatus.

5.1.1 Sampling Containers. Clean 1,000 mL plastic containers.

5.2 Sample Filtration.

5.2.1 Glass Fiber Filter. (1) 140 mL capacity plastic syringe with threaded connector to attach *Swinnex* filter holder. (1) 25 mm filter holder (Swinnex plastic filter holder) http://www.wine-testing-supplies.com/cgi-bin/cp-app.cgi
(1) box of 100 Ahlstrom (or equivalent) glass microfiber filters
(See Figure 6)

6. REAGENTS

6.1 Sampling.

6.1.1 Sample Preservation. None required as water will be analyzed immediately.

6.3 Analysis.

6.3.2 Caustic Food-grade sodium bicarbonate powder

©Proprietary and Confidential. Property of Clear Water Services. All Rights Reserved ©

6.3.3 Iodine 0.10 N solution as I_2, CAS# 7553-56-2

6.3.4 Chitosan 1.5% solution of chitosan acetate as a standard (CES).

7. PROCEDURE

7.1 Sampling.

7.1.1 Collect (2) 1 Liter samples of the chitosan-treated filtrate directly from the effluent of the chitosan-enhanced sand filter system. Test with a turbidimeter to ensure the turbidity is less than 10 NTU.

7.2 Sample Filtration.

7.2.1 Add 5 drops of bleach solution to the treatment system filtrate sample. Adjust the pH of the sample to > 8 with sodium bicarbonate (approx. 5 grams) and mix for 1 minute. Then filter 200 mL of the sample through the 25 mm glass fiber filter unit attached to the filtration syringe (see Figure 6).

7.3 Analysis.

7.3.1 Air-dry the 25mm glass fiber filter[3]. Put one drop of iodine on the dried filter paper, wait 15 minutes then interpret the results. A light yellow-rust color indicates the absence of chitosan (<0.2 mg/L). A dark brown or blue/black color indicates the presence of chitosan (>0.2 mg/L). See Figures 3 and 4 for color key. It is important to note that the iodine color associated with a negative result (or blank) will fade and disappear within about 20 minutes while the color associated with a positive test is permanent for a period of several hours at least. Figure 5 is a color comparison chart using actual treated filtrate with a turbidity of 9.05 NTU.

7.4 Field Matrix Spike. To the second 1-liter sample add chitosan acetate standard to a concentration of 0.20 mg/L and repeat the filtration procedure. Put one drop of iodine on the dried filter paper, wait one minute then interpret the results. This spike should be recovered as a dark stain on the filter paper (see Figures 3 and 4).

8. CALIBRATION – QA/QC

8.1 Method Calibration (Laboratory Spikes, blanks and duplicates).

8.1.1 To calibrate the test method run the test sequence using laboratory grade water with four different known concentrations of chitosan acetate as indicated below:

0 mg chitosan acetate in 1 liter water (0.0 mg/L) the blank
0.125 mg chitosan acetate in 1-liter water (0.125 mg/L)
0.25 mg chitosan acetate in 1-liter water (0.25 mg/L)
0.5 mg chitosan acetate in 1-liter water (0.5 mg/L)

[3] The glass micro-fiber filter does not have to be completely dry but should <u>not</u> be saturated with water to obtain the best results.

©Clear Water Compliance Services, Inc.

Adjust the pH of each test solution to 8.0 or greater with 5 grams sodium bicarbonate, mix and let stand for 5 minutes. Filter 200 mL of each solution, remove and dry the filter, then add one drop of the iodine solution to each filter and observe the result.

Wait 15 minutes then interpret the results[4]. The control blank should be colorless or nearly colorless while the 0.125 mg and 0.25 mg and 0.5 mg standards should turn dark brown, or nearly black (see Figures 3 and 4).

8.1.2 Re-run the tests using new standards – test duplicates.

9. Method QA/QC

9.1 Matrix Spikes.

Collect one liter of treated CESF effluent known to be free of residual chitosan. To each sample add:

0 mg chitosan acetate in 1 liter water (0.0 mg/L)
0.125 mg chitosan acetate in 1-liter water (0.125 mg/L)
0.25 mg chitosan acetate in 1-liter water (0.25 mg/L)
0.5 mg chitosan acetate in 1-liter water (0.5 mg/L)

Adjust the pH of each test solution to 8.0 or greater with 5 grams sodium bicarbonate, mix and let stand for 5 minutes. Filter 200 mL of each solution, remove and dry the filter, then add one drop of the iodine solution to each filter and observe. See Figure 5.

9.2 Matrix Spike Duplicates.

Collect one liter of treated CESF effluent known to have less than 0.2 mg/l residual chitosan. To each sample add:

0 mg chitosan acetate in 1 liter water (0.0 mg/L)
0.125 mg chitosan acetate in 1-liter water (0.125 mg/L)
0.25 mg chitosan acetate in 1-liter water (0.25 mg/L)
0.5 mg chitosan acetate in 1-liter water (0.5 mg/L)

Adjust the pH of each test solution to 8.0 or greater with 5 grams sodium bicarbonate, mix and let stand for 5 minutes. Filter 200 mL of each solution, remove and dry the filter, then add one drop of the iodine solution to each filter and observe.

[4] After approximately 20 minutes the yellow-rust color of the iodine without chitosan (blank) will disappear leaving no color (see Figures 3 &4). The dark color of iodine in the presence of chitosan will persist and become permanent.

©Clear Water Compliance Services, Inc.

9.3 Blanks.

Blanks should be run along with the treated water sample to ensure there is no inadvertent chitosan contamination in the equipment. To perform a blank analysis, adjust the pH of distilled water to > 8 with sodium bicarbonate and filter in exactly the same way the sample is filtered. Place one drop of the iodine solution on the dried filter element. The blank should be a yellow-rust color with no visible dark staining and the color should fade to colorless within approximately 15 to 20 minutes leaving a white filter.

Example Test Results:

- The upper left filter was a blank (200 ml of water known not to contain any chitosan acetate was filtered after treatment with sodium bicarbonate). The slight yellow color indicates the presence of less than 0.2 mg/l chitosan
- The upper right filter was a known 0.2 mg/l standard.
- The lower left was 1% ChitoVan-brand simply to compare with the iodine reaction with Liqui-Floc-brand chitosan acetate.

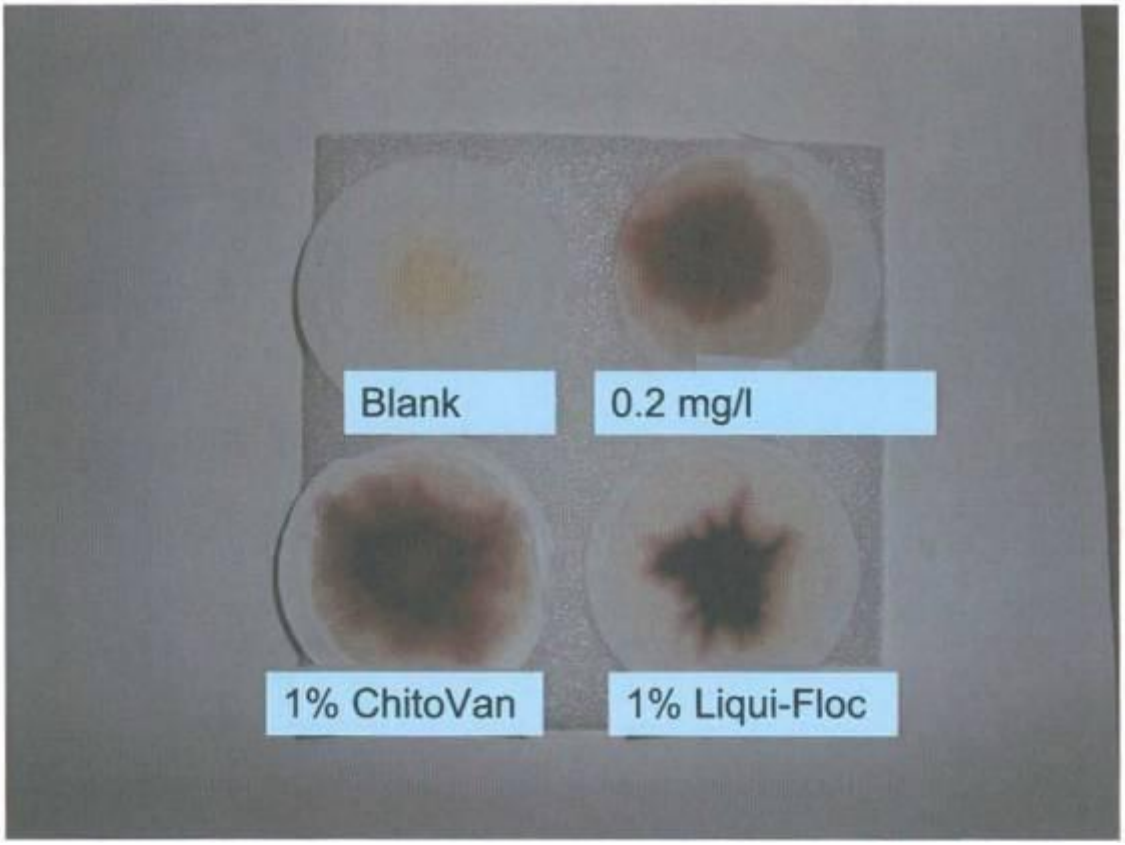

©Clear Water Compliance Services, Inc.

ATTACHMENT 2

Chitosan-Enhanced Sand Filtration Operation Forms

CLEAR WATER SERVICES

CESF – MASTER OPERATIONS FORM

Project Title: North Boeing Field – LTST Facility Project No.: 11BOE2

Project Location: Seattle, WA Date: _____

GALLONS	MH-130A	Vault	PT	SYSTEM 1 EFF	SYSTEM 2 EFF	SYSTEM 3 EFF
LAST:						
CURRENT:						
TOTAL:						

LMI PUMP CALIBRATION

	Time	Flow (gpm)	Chitosan Delivery (ml/min)	Dose Rate (ppm)	Initials
PT					
SYS 1					
SYS 2					
SYS 3					

RESIDUAL CHITOSAN MONITORING

SAMPLE TIME: RESULT TIME:

	Turbidity NTU	Conductivity µS/cm	pH	Chitosan Dose Rate ppm	Result (Positive/ Negative)
Analysis					
Matrix Spike					

PASS / FAIL

CESF SYSTEM INSTRUMENT CALIBRATION: GF Signet pH meters

	Sys 1 Influent		Sys 1 Effluent		Sys 2 Influent		Sys 2 Effluent		Sys 3 Influent		Sys 3 Effluent	
pH Std	Initial	Cal	Initial	Cal	Initial	Cal	Initial	Cal	Initial	Cal	Initial	Cal
4.01												
7.00												

CESF SYSTEM INSTRUMENT CALIBRATION: MicroTOL Turbidimeters

	Sys 1 Influent		Sys 1 Effluent		Sys 2 Influent		Sys 2 Effluent		Sys 3 Influent		Sys 3 Effluent	
Turb Std	Initial	Cal	Initial	Cal	Initial	Cal	Initial	Cal	Initial	Cal	Initial	Cal
1000												
10												
.02												

Cuvettes Cleaned?_____

Technician Name: _____ Technician Signature: _____

CLEAR WATER COMPLIANCE SERVICES, INC.

CESF – DAILY SYSTEM OPERATIONS AND MAINTENANCE

Project Title: _____ Project No.: _____

Project Location: _____ Date: _____

Weather Conditions: _____

	Pretreatment Meter Reading		Influent Meter Reading		Effluent Meter Reading	
	Gallons	Time	Gallons	Time	Gallons	Time
Start:	_____	_____	_____	_____	_____	_____
Finish:	_____	_____	_____	_____	_____	_____
Total Volume:	_____		_____		_____	

Operator's Evaluation of System Operations: _____

_____

_____

_____

_____

_____

_____

_____

_____

Residual Chitosan Test: # of tests: _____ Results: # Passed _____ # Failed _____

Recent Hydroseeding/Hydromulching onsite: Yes No

First Shift	Second Shift	Third Shift
_____	_____	_____
Technician Name	Technician Name	Technician Name
_____	_____	_____
Technician Signature	Technician Signature	Technician Signature

CLEAR WATER COMPLIANCE SERVICES, INC.

CESF – EVALUATION OF SYSTEM OPERATIONS & MAINTENANCE

Project Title: _____ Project No.: _____

Project Location: _____ Date: _____

Operator's Evaluation of System Operations: _____

_____

_____

_____

_____

_____

_____

_____

_____

_____

_____

_____

_____

Other Monitoring: _____

_____

_____

_____

First Shift	Second Shift	Third Shift
Technician Name	Technician Name	Technician Name
Technician Signature	Technician Signature	Technician Signature

CLEAR WATER COMPLIANCE SERVICES, INC.

MANUAL DATA COLLECTION MONITORING FORM

Project Title: _____ Project No.: _____

Project Location: _____ Date: _____

Notes	Time	pH Influent / Effluent	NTU Influent / Effluent	Pressures Influent / Effluent	Initials
		/	/	/	
		/	/	/	
		/	/	/	
		/	/	/	
		/	/	/	
		/	/	/	
		/	/	/	
		/	/	/	
		/	/	/	
		/	/	/	
		/	/	/	
		/	/	/	
		/	/	/	
		/	/	/	
		/	/	/	
		/	/	/	
		/	/	/	
		/	/	/	
		/	/	/	
		/	/	/	
		/	/	/	

* Indicates verification of in-line meters – samples measured with benchtop meters (required once per day).

First Shift	Second Shift	Third Shift
Technician Name	Technician Name	Technician Name
Technician Signature	Technician Signature	Technician Signature

CLEAR WATER COMPLIANCE SERVICES, INC.

CESF SYSTEM INSTRUMENT CALIBRATION REPORT FORM

Project Title: _____ Project No.: _____

Project Location: _____ Date: _____

Influent pH Meter Model: _____

pH Standard: _____ Initial Reading: _____ Calibrated Reading: _____

pH Standard: _____ Initial Reading: _____ Calibrated Reading: _____

Effluent pH Meter Model: _____

pH Standard: _____ Initial Reading: _____ Calibrated Reading: _____

pH Standard: _____ Initial Reading: _____ Calibrated Reading: _____

_____ pH Meter Model: _____

pH Standard: _____ Initial Reading: _____ Calibrated Reading: _____

pH Standard: _____ Initial Reading: _____ Calibrated Reading: _____

_____ pH Meter Model: _____

pH Standard: _____ Initial Reading: _____ Calibrated Reading: _____

pH Standard: _____ Initial Reading: _____ Calibrated Reading: _____

First Shift	Second Shift	Third Shift
Technician Name	Technician Name	Technician Name
Technician Signature	Technician Signature	Technician Signature

CLEAR WATER COMPLIANCE SERVICES, INC.

CESF SYSTEM INSTRUMENT CALIBRATION REPORT FORM

Project Title: _____ Project No.: _____

Project Location: _____ Date: _____

Pretreatment Turbidity Meter Model: _____

Turbidity Standard: _____ Initial Reading: _____ Calibrated Reading: _____

Turbidity Standard: _____ Initial Reading: _____ Calibrated Reading: _____

Turbidity Standard: _____ Initial Reading: _____ Calibrated Reading: _____

Influent Turbidity Meter Model: _____

Turbidity Standard: _____ Initial Reading: _____ Calibrated Reading: _____

Turbidity Standard: _____ Initial Reading: _____ Calibrated Reading: _____

Turbidity Standard: _____ Initial Reading: _____ Calibrated Reading: _____

Effluent Turbidity Meter Model: _____

Turbidity Standard: _____ Initial Reading: _____ Calibrated Reading: _____

Turbidity Standard: _____ Initial Reading: _____ Calibrated Reading: _____

Turbidity Standard: _____ Initial Reading: _____ Calibrated Reading: _____

First Shift	Second Shift	Third Shift
Technician Name	Technician Name	Technician Name
Technician Signature	Technician Signature	Technician Signature

CLEAR WATER COMPLIANCE SERVICES, INC.

BENCHTOP INSTRUMENT CALIBRATION REPORT FORM

Project Title: _____ Project No.: _____

Project Location: _____ Date: _____

pH Meter Model: _____

pH Standard: _____ Initial Reading: _____ Calibrated Reading: _____

pH Standard: _____ Initial Reading: _____ Calibrated Reading: _____

pH Standard: _____ Initial Reading: _____ Calibrated Reading: _____

Turbidity Meter Model: _____

Turbidity Standard: _____ Initial Reading: _____ Calibrated Reading: _____

Turbidity Standard: _____ Initial Reading: _____ Calibrated Reading: _____

Turbidity Standard: _____ Initial Reading: _____ Calibrated Reading: _____

Turbidity Standard: _____ Initial Reading: _____ Calibrated Reading: _____

Conductivity Meter Model: _____

Conductivity Standard: _____

Initial Reading: _____

Calibrated Reading: _____

First Shift	Second Shift	Third Shift
_____	_____	_____
Technician Name	Technician Name	Technician Name
_____	_____	_____
Technician Signature	Technician Signature	Technician Signature

CLEAR WATER COMPLIANCE SERVICES, INC.

CHEMICAL METERING PUMP CALIBRATION FORM

Project Title: _____ Project No.: _____

Project Location: _____ Date: _____

Note: Chemical metering pump calibrations are required at the start of treatment system operations and every 4 hours following treatment system startup.

Time	Pre-treat/ Sand Filter	Flow (gpm)	Chitosan 1% or 2%	Chitosan Delivery (ml/min)	Dose Rate (ppm)	Initials

CHITOSAN DELIVERY DOSE RATE CALCULATION

1. Liqui-Floc delivery rate (ml/min) x 0.01 (chitosan concentration) x 1 g/ml (weight of liqui-floc) = absolute weight of chitosan in g/min
2. Chitosan delivery (g/min) x 1000 mg/g = chitosan delivery rate (mg/min)
3. System influent flow (gpm) x 3.78 L/gal. = stormwater flow rate (L/min)
4. (Chitosan-mg/min) / (flow rate-L/min) = dose rate in mg/L = ppm

First Shift	Second Shift	Third Shift
Technician Name	Technician Name	Technician Name
Technician Signature	Technician Signature	Technician Signature

CLEAR WATER COMPLIANCE SERVICES, INC.

RESIDUAL CHITOSAN TEST MONITORING FORM

Project Title: _____ Project No.: _____

Project Location: _____ Date: _____

Note: Residual chitosan testing is required twice during the first two hours of each 8 hour operational period.

Sample Time	Turbidity NTU	pH	Specific Conductance µS/cm	Flow Rate gpm	Chitosan Delivery ml/min	Chitosan Dose Rate ppm

RESIDUAL CHITOSAN TEST No. 1 – ANALYSIS – Time

pH Start _____ Adjusted pH _____ Test Result: Positive Negative

RESIDUAL CHITOSAN TEST No. 1 – MATRIX SPIKE - Time

pH Start _____ Adjusted pH _____ Test Result: Positive Negative

Residual Chitosan Test Results: Pass Fail

RESIDUAL CHITOSAN TEST No. 2 – ANALYSIS - Time

pH Start _____ Adjusted pH _____ Test Result: Positive Negative

RESIDUAL CHITOSAN TEST No. 2 – MATRIX SPIKE – Time

pH Start _____ Adjusted pH _____ Test Result: Positive Negative

Residual Chitosan Test Results: Pass Fail

First Shift	**Second Shift**	**Third Shift**
Technician Name	Technician Name	Technician Name
Technician Signature	Technician Signature	Technician Signature

CLEAR WATER COMPLIANCE SERVICES, INC.

RECEIVING WATER QUALITY MONITORING FORM

Project Title: _____ Project No.: _____

Project Location: _____ Date: _____

Before Startup:

Sample Location: _____

	Upstream	Downstream
Sample Time:	_____	_____
Turbidity (NTU):	_____	_____
pH (Standard Units):	_____	_____
Specific Conductance (uS/cm):	_____	_____

During Operations:

Sample Location: _____

	Upstream	Downstream
Sample Time:	_____	_____
Turbidity (NTU):	_____	_____
pH (Standard Units):	_____	_____
Specific Conductance (uS/cm):	_____	_____

First Shift	**Second Shift**	**Third Shift**
_____	_____	_____
Technician Name	Technician Name	Technician Name
_____	_____	_____
Technician Signature	Technician Signature	Technician Signature

CLEAR WATER COMPLIANCE SERVICES, INC.

BENCH-SCALE TREATABILITY DOCUMENTATION FORM

Project Title: _____ Project No.: _____

Project Location: _____ Date: _____

Sample Identification: _____

Sample Time: _____ Sample Volume: _____ Turbidity (NTU): _____

pH initial (Std. units): _____ pH (Std. units): _____ Conductivity (µS/cm): _____

(If normally adjusted using CO_2 or Sodium Bicarbonate)

Bench-Scale Treatability Results

Drops of 1% Liqui-floc	Estimated Dose Rate (ppm)	Observed Results (floc size and setting time)

1 drop of 1% Liqui-Floc using a 3-mL transfer pipette is approximately 0.5 ppm in a 1-liter sample

1 drop of Poly Alum 60 using a 3-mL transfer pipette is approximately 37 ppm in a 1 liter sample

Observations: _____

_____

_____

_____

First Shift	Second Shift	Third Shift
Technician Name	Technician Name	Technician Name
Technician Signature	Technician Signature	Technician Signature

APPENDIX I

Soil Disposal Truck Weigh Tickets

WASTE MANAGEMENT

Alaska Street
70 S Alaska Street
Seattle, WA, 98134

Original
Ticket# 30764

Ph: 206 763 5025

Customer Name BOEING BOEING
Ticket Date 07/11/2011
Payment Type Credit Account
Manual Ticket#
Route
Hauling Ticket#
Destination
PO# 102596WA

Carrier SELF HAULER *
Vehicle# H001 Volume
Container
Driver
Check#
Billing# 0000013
Grid

	Time	Scale	Operator	Inbound		
In	07/11/2011 11:24:10	SCALE 1	lmercer		Gross	45400 lb
Out	07/11/2011 11:38:47	SCALE 1	lmercer		Tare	22560 lb
					Net	22840 lb
					Tons	11.42

Comments HERTZ /BE

	Product	LD%	Qty	UOM	Rate	Tax	Amount	Origin
1	Daily Cover-PCS-Tons-Pet	100	11.42	Tons				KING
2	GONDOLA 16.10/TN-GONDOLA	100	11.42	Tons				KING

3-323 Wside Small Exc.
GTSP Phase I Activity Load 1 of 1

Total Tax
Total Ticket

203WM
Driver's Signature

BILL OF LADING/SCALE TICKET

WASTE MANAGEMENT

BOEING# Y2131

Generators Name & Address:
BOEING CO. - NORTH BOEING FIELD
7500 E. MARGINAL WAY S.
SEATTLE, WA. 98108

Billing: BOEING CO.
Contact Person: MARY JO DONNELLY
Contact Number: (206) 662-2534
Fax Number: (425) 294-9263

Acknowledgement of Loading

Jennifer Parsons
Name (Please Print)

Jennifer Parsons
Signature

206 715-7981 cell
425 965-4180 fax

BOEING - NORTH FIELD
Company

7/11/11
Date

Deliver To:

ALASKA RELOAD & RECYCLING FACILITY
70 SOUTH ALASKA STREET
SEATTLE, WASHINGTON 98134
TELEPHONE #: (206) 763-5025
MONDAY-FRIDAY 7:00AM-4:00PM

Disposal Facility:

COLUMBIA RIDGE LANDFILL AND
RECYCLING FACILITY
18177 CEDAR SPRINGS LANE
ARLINGTON, OREGON 97812
TELEPHONE: (541) 454-2030

Transporter Name: (SELF HAUL)
Hertz Rental
Glacier Environmental
Truck #: 7075

Waste Profile # 102596WA

Waste Type: ADC

Expiration Date: 01/07/12

Mark Lenner
Driver's Name (Please Print)

SIGNATURE

Remarks: DT/SELF HAUL (15CY)

3-323 W side GTSP min FXC
by Door W4

WASTE MANAGEMENT

Alaska Street
70 S Alaska Street
Seattle, WA, 98134

Original
Ticket# 31111

Ph: 206 763 5025

Customer Name BOEING BOEING
Ticket Date 07/22/2011
Payment Type Credit Account
Manual Ticket#
Route AK
Hauling Ticket#
Destination
PO# 102596WA

Carrier R TRANSPORT R TRANSPORT
Vehicle# R9 Volume
Container
Driver TYE LEE
Check#
Billing# 0000013
Grid

	Time	Scale	Operator	Inbound		
In	07/22/2011 08:29:14	SCALE 1	lmercer		Gross	112040 lb
Out	07/22/2011 08:29:14		lmercer		Tare	41960 lb
					Net	70080 lb
					Tons	35.04

Comments MANIFEST V2301 R TRANS
YE

	Product	LD%	Qty	UOM	Rate	Tax	Amount	Origin
1	Daily Cover-PCS-Tons-Pet	100	35.04	Tons				KING
2	GONDOLA 16.10/TN-GONDOLA	100	35.04	Tons				KING
3	LOCT$8.76W/32TON MIN-LOC	100	35.04	Tons				KING

Total Tax
Total Ticket

203WM
Driver's Signature

BILL OF LADING/SCALE TICKET

WASTE MANAGEMENT

BOEING # V2301 3/22/11

SUD HAUL

Generators Name & Address: BLDG# 3-3800
BOEING CO - NORTH BOEING FIELD
7500 E. MARGINAL WAY S.
SEATTLE, WA. 98108

Billing: BOEING
Contact Person: DAVE OSKAMP
Contact Number: (206) 662-7347
Fax Number:

Acknowledgement of Loading

Name (Please Print)

BOEING CO. / NORTH BOEING FIELD
Company

Signature

Date

Deliver To:

ALASKA RELOAD & RECYCLING FACILITY
70 SOUTH ALASKA STREET
SEATTLE, WASHINGTON 98134
TELEPHONE #: (206) 763-5025
MONDAY-FRIDAY 7:00AM-4:00PM

Disposal Facility:

COLUMBIA RIDGE LANDFILL AND
RECYCLING FACILITY
18177 CEDAR SPRINGS LANE
ARLINGTON, OREGON 97812
TELEPHONE: (541) 454-2030

Transporter Name:
R TRANSPORT

Waste Profile # 10259GWA

Truck #: R9

Waste Type: ADC

Expiration Date: 01/07/12

TYE LEE
Driver's Name (Please Print)

SIGNATURE

Remarks: I-T+P (TURUS)

WASTE MANAGEMENT

Alaska Street
70 S Alaska Street
Seattle, WA, 98134

Original
Ticket# 31112

Ph: 206 763 5025

Customer Name BOEING BOEING
Ticket Date 07/22/2011
Payment Type Credit Account
Manual Ticket#
Route AK
Hauling Ticket#
Destination
PO# 102596WA

Carrier R TRANSPORT R TRANSPORT
Vehicle# W14 Volume
Container
Driver TRAVIS CHASE
Check#
Billing# 0000013
Grid

	Time	Scale	Operator	Inbound		
In	07/22/2011 08:39:11	SCALE 1	lmercer		Gross	111300 lb
Out	07/22/2011 08:39:11		lmercer		Tare	39100 lb
					Net	72200 lb
					Tons	36.10

Comments MANIFEST V2301 KOOY YE

	Product	LD%	Qty	UOM	Rate	Tax	Amount	Origin
1	Daily Cover-PCS-Tons-Pet	100	36.10	Tons				KING
2	GONDOLA 16.10/TN-GONDOLA	100	36.10	Tons				
3	LOCT$8.76W/32TON MIN-LOC	100	36.10	Tons				

Total Tax
Total Ticket

203WM
Driver's Signature

BILL OF LADING/SCALE TICKET

WASTE MANAGEMENT

BOEING # V23Ø1 7/22/11 SKB HAUL

Generators Name & Address: BLDG# 3-38Ø
BOEING CO - NORTH BOEING FIELD
75ØØ E. MARGINAL WAY S.
SEATTLE, WA. 98108

Billing: BOEING
Contact Person: DAVE OSKAMP
Contact Number: (206) 662-7347
Fax Number:

Acknowledgement of Loading

Name (Please Print)

Signature

BOEING CO. / NORTH BOEING FIELD
Company

7/22/11
Date

Deliver To:

ALASKA RELOAD & RECYCLING FACILITY
70 SOUTH ALASKA STREET
SEATTLE, WASHINGTON 98134
TELEPHONE #: (206) 763-5025
MONDAY-FRIDAY 7:00AM-4:00PM

Disposal Facility:

COLUMBIA RIDGE LANDFILL AND
RECYCLING FACILITY
18177 CEDAR SPRINGS LANE
ARLINGTON, OREGON 97812
TELEPHONE: (541) 454-2030

Transporter Name:
R TRANSPORT

Waste Profile # 1Ø2596WA

Truck #: W-14 (Kay)

Waste Type: ADC

Expiration Date: Ø1/Ø7/12

TRAVIS CHASE
Driver's Name (Please Print)

Travis Chase
SIGNATURE

Remarks: I-7+P (TURUS)

WASTE MANAGEMENT

Alaska Street
70 S Alaska Street
Seattle, WA, 98134

Original
Ticket# 31114

Ph: 206 763 5025

Customer Name BOEING BOEING
Ticket Date 07/22/2011
Payment Type Credit Account
Manual Ticket#
Route AK
Hauling Ticket#
Destination
PO# 102596WA

Carrier R TRANSPORT R TRANSPORT
Vehicle# R9 Volume
Container
Driver TYE LEE
Check#
Billing# 0000013
Grid

	Time	Scale	Operator	Inbound		
In	07/22/2011 09:06:10	SCALE 1	lmercer		Gross	105360 lb
Out	07/22/2011 09:06:10		lmercer		Tare	41960 lb
					Net	63400 lb
					Tons	31.70

Comments V2301 R TRANSPORT JM

	Product	LD%	Qty	UOM	Rate	Tax	Amount	Origin
1	Daily Cover-PCS-Tons-Pet	100	31.70	Tons				KING
2	GONDOLA 16.10/TN-GONDOLA	100	31.70	Tons				
3	LOCT$8.76W/32TON MIN-LOC	100	31.70	Tons				

Total Tax
Total Ticket

203WM
Driver's Signature

BILL OF LADING/SCALE TICKET

WASTE MANAGEMENT

BOEING # V2301 7/22/11
SUB HAUL
BLDG# 3-380

Generators Name & Address:
BOEING CO - NORTH BOEING FIELD
7540 E. MARGINAL WAY S.
SEATTLE, WA. 98108

Billing: BOEING
Contact Person: DAVE OSKAMP
Contact Number: (206) 662-7347
Fax Number:

Acknowledgement of Loading

Name (Please Print)

BOEING CO. / NORTH BOEING FIELD
Company

Signature

Date

Deliver To:

ALASKA RELOAD & RECYCLING FACILITY
70 SOUTH ALASKA STREET
SEATTLE, WASHINGTON 98134
TELEPHONE #: (206) 763-5025
MONDAY-FRIDAY 7:00AM-4:00PM

Disposal Facility:

COLUMBIA RIDGE LANDFILL AND
RECYCLING FACILITY
18177 CEDAR SPRINGS LANE
ARLINGTON, OREGON 97812
TELEPHONE: (541) 454-2030

Transporter Name:
R TRANSPORT

Waste Profile # 1025960A

Truck #: R9

Waste Type: ADC

Expiration Date: 01/07/12

TYE LEE
Driver's Name (Please Print)

SIGNATURE

Remarks: 1-7+P (TURUS)

WASTE MANAGEMENT

Alaska Street
70 S Alaska Street
Seattle, WA, 98134

Original
Ticket# 31115

Ph: 206 763 5025

Customer Name BOEING BOEING
Ticket Date 07/22/2011
Payment Type Credit Account
Manual Ticket#
Route AK
Hauling Ticket#
Destination
PO# 102596WA

Carrier R TRANSPORT R TRANSPORT
Vehicle# W14 Volume
Container
Driver TRAVIS CHASE
Check#
Billing# 0000013
Grid

	Time	Scale	Operator	Inbound		
In	07/22/2011 09:17:44	SCALE 1	lmercer		Gross	101680 lb
Out	07/22/2011 09:17:44		lmercer		Tare	39100 lb
					Net	62580 lb
					Tons	31.29

Comments V2310 KOOY JM

	Product	LD%	Qty	UOM	Rate	Tax	Amount	Origin
1	Daily Cover-PCS-Tons-Pet	100	31.29	Tons				KING
2	GONDOLA 16.10/TN-GONDOLA	100	31.29	Tons				KING
3	LOCT$8.76W/32TON MIN-LOC	100	31.29	Tons				KING

Total Tax
Total Ticket

203WM
Driver's Signature

BILL OF LADING/SCALE TICKET

WASTE MANAGEMENT

BOEING # V2301 7/22/11 SUB HAUL BLPG# 3-380

Generators Name & Address:
BOEING CO - NORTH BOEING FIELD
7500 E. MARGINAL WAY S.
SEATTLE, WA. 98108

Billing: BOEING
Contact Person: DAVE OSKAMP
Contact Number: (206) 662-7347
Fax Number:

Acknowledgement of Loading

Name (Please Print)

Signature

BOEING CO. / NORTH BOEING FIELD
Company

7/22/11
Date

Deliver To:

ALASKA RELOAD & RECYCLING FACILITY
70 SOUTH ALASKA STREET
SEATTLE, WASHINGTON 98134
TELEPHONE #: (206) 763-5025
MONDAY FRIDAY 7:00AM-4:00PM

Disposal Facility:

COLUMBIA RIDGE LANDFILL AND
RECYCLING FACILITY
18177 CEDAR SPRINGS LANE
ARLINGTON, OREGON 97812
TELEPHONE: (541) 454-2030

Transporter Name:
R TRANSPORT

Truck #: W-14 (Kay)

Waste Profile # 1025960A

Waste Type: ADC

Expiration Date: 01/07/12

Travis Chase
Driver's Name (Please Print)

Travis Chase
SIGNATURE

Remarks: T+P (TURHS)

Alaska Street
70 S Alaska Street
Seattle, WA, 98134

Original
Ticket# 31119

Ph: 206 763 5025

Customer Name BOEING BOEING
Ticket Date 07/22/2011
Payment Type Credit Account
Manual Ticket#
Route AK
Hauling Ticket#
Destination
PO# 102596WA

Carrier R TRANSPORT R TRANSPORT
Vehicle# R9 Volume
Container
Driver TYE LEE
Check#
Billing# 0000013
Grid

	Time	Scale	Operator	Inbound		
In	07/22/2011 09:47:03	SCALE 1	lmercer		Gross	108040 lb
Out	07/22/2011 09:47:03		lmercer		Tare	41960 lb
					Net	66080 lb
					Tons	33.04

Comments V2301 R TRANSPORT JM

	Product	LD%	Qty	UOM	Rate	Tax	Amount	Origin
1	Daily Cover-PCS-Tons-Pet	100	33.04	Tons				KING
2	GONDOLA 16.10/TN-GONDOLA	100	33.04	Tons				KING
3	LOCT$8.76W/32TON MIN-LOC	100	33.04	Tons				KING

Total Tax
Total Ticket

Signature

BILL OF LADING/SCALE TICKET

WASTE MANAGEMENT

BOEING # V2301 7/22/11

SUB HAUL

Generators Name & Address: BLDG # 3-380
BOEING CO - NORTH BOEING FIELD
7500 E. MARGINAL WAY S.
SEATTLE, WA. 98108

Billing: BOEING
Contact Person: DAVE OSKAMP
Contact Number: (206) 662-7347
Fax Number:

Acknowledgement of Loading

Name (Please Print)

BOEING CO. / NORTH BOEING FIELD
Company

Signature

Date

Deliver To:

ALASKA RELOAD & RECYCLING FACILITY
70 SOUTH ALASKA STREET
SEATTLE, WASHINGTON 98134
TELEPHONE #: (206) 763-5025
MONDAY-FRIDAY 7:00AM-4:00PM

Disposal Facility:

COLUMBIA RIDGE LANDFILL AND
RECYCLING FACILITY
18177 CEDAR SPRINGS LANE
ARLINGTON, OREGON 97812
TELEPHONE: (541) 454-2030

Transporter Name:
R TRANSPORT

Truck #: R9

Waste Profile # 102596WA

Waste Type: ADC

Expiration Date: 01/07/12

TYE LEE
Driver's Name (Please Print)

SIGNATURE

Remarks: I-T-P (TURUS)

WASTE MANAGEMENT

Alaska Street
70 S Alaska Street
Seattle, WA, 98134

Original
Ticket# 31120

Ph: 206 763 5025

Customer Name BOEING BOEING
Ticket Date 07/22/2011
Payment Type Credit Account
Manual Ticket#
Route AK
Hauling Ticket#
Destination
PO# 102596WA

Carrier R TRANSPORT R TRANSPORT
Vehicle# W14 Volume
Container
Driver TRAVIS CHASE
Check#
Billing# 0000013
Grid

	Time	Scale	Operator	Inbound		
In	07/22/2011 09:58:26	SCALE 1	lmercer		Gross	103440 lb
Out	07/22/2011 09:58:26		lmercer		Tare	39100 lb
					Net	64340 lb
					Tons	32.17

Comments V2301 KOOY JM

	Product	LD%	Qty	UOM	Rate	Tax	Amount	Origin
1	Daily Cover-PCS-Tons-Pet	100	32.17	Tons				KING
2	GONDOLA 16.10/TN-GONDOLA	100	32.17	Tons				
3	LOCT$8.76W/32TON MIN-LOC	100	32.17	Tons				

Total Tax
Total Ticket

203WM Driver's Signature

BILL OF LADING/SCALE TICKET

WASTE MANAGEMENT

BOEING # V23Ø1 7/22/11 SUB HAUL BLDG # 3-38Ø

Generators Name & Address:
BOEING CO - NORTH BOEING FIELD
75ØØ E. MARGINAL WAY S.
SEATTLE, WA. 98108

Billing: BOEING
Contact Person: DAVE OSKAMP
Contact Number: (206) 662-7347
Fax Number:

Acknowledgement of Loading

Name (Please Print)

Signature

BOEING CO. / NORTH BOEING FIELD
Company

7/22/11
Date

Deliver To:

ALASKA RELOAD & RECYCLING FACILITY
70 SOUTH ALASKA STREET
SEATTLE, WASHINGTON 98134
TELEPHONE #: (206) 763-5025
MONDAY-FRIDAY 7:00AM-4:00PM

Disposal Facility:

COLUMBIA RIDGE LANDFILL AND
RECYCLING FACILITY
18177 CEDAR SPRINGS LANE
ARLINGTON, OREGON 97812
TELEPHONE: (541) 454-2030

Transporter Name:
R TRANSPORT

Truck #: W-14 (Kaag)

Waste Profile # 1Ø2596WA

Waste Type: ADC

Expiration Date: Ø1/Ø7/12

TRAVIS CHASE
Driver's Name (Please Print)

Travis Chase
SIGNATURE

Remarks: I-7+P (TURNS)

WASTE MANAGEMENT

Alaska Street
70 S Alaska Street
Seattle, WA, 98134

Original
Ticket# 31129

Ph: 206 763 5025

Customer Name BOEING BOEING
Ticket Date 07/22/2011
Payment Type Credit Account
Manual Ticket#
Route AK
Hauling Ticket#
Destination
PO# 102596WA

Carrier R TRANSPORT R TRANSPORT
Vehicle# R9 Volume
Container
Driver TYE LEE
Check#
Billing# 0000013
Grid

	Time	Scale	Operator	Inbound		
In	07/22/2011 10:52:34	SCALE 1	lmercer		Gross	106180 lb
Out	07/22/2011 10:52:34		lmercer		Tare	41960 lb
					Net	64220 lb
					Tons	32.11

Comments V2310 R TRANSPORT JM

	Product	LD%	Qty	UOM	Rate	Tax	Amount	Origin
1	Daily Cover-PCS-Tons-Pet	100	32.11	Tons				KING
2	GONDOLA 16.10/TN-GONDOLA	100	32.11	Tons				
3	LOCT$8.76W/32TON MIN-LOC	100	32.11	Tons				

Total Tax
Total Ticket

203WM
Driver's Signature

BILL OF LADING/SCALE TICKET

WASTE MANAGEMENT

BOEING # V23Ø1 7/22/11 SUB HAUL BLDG # 3-38Ø

Generators Name & Address:
BOEING CO - NORTH BOEING FIELD
75ØØ E. MARGINAL WAY S.
SEATTLE, WA. 98108

Billing: BOEING
Contact Person: DAVE OSKAMP
Contact Number: (206) 662-7347
Fax Number:

Acknowledgement of Loading

Name (Please Print)

BOEING CO. / NORTH BOEING FIELD
Company

Signature

Date

Deliver To:

ALASKA RELOAD & RECYCLING FACILITY
70 SOUTH ALASKA STREET
SEATTLE, WASHINGTON 98134
TELEPHONE #: (206) 763-5025
MONDAY-FRIDAY 7:00AM-4:00PM

Disposal Facility:

COLUMBIA RIDGE LANDFILL AND
RECYCLING FACILITY
18177 CEDAR SPRINGS LANE
ARLINGTON, OREGON 97812
TELEPHONE: (541) 454-2030

Transporter Name:
R. TRANSPORT

Waste Profile # 1Ø2596WA

Truck #: R9

Waste Type: ADC

Expiration Date: Ø1/Ø7/12

TJ LEE
Driver's Name (Please Print)

SIGNATURE

Remarks: 1-7+P (TURUS)

WASTE MANAGEMENT

Alaska Street
70 S Alaska Street
Seattle, WA, 98134

Original
Ticket# 31130

Ph: 206 763 5025

Customer Name BOEING BOEING
Ticket Date 07/22/2011
Payment Type Credit Account
Manual Ticket#
Route AK
Hauling Ticket#
Destination
PO# 102596WA

Carrier R TRANSPORT R TRANSPORT
Vehicle# W14 Volume
Container
Driver TRAVIS CHASE
Check#
Billing# 0000013
Grid

	Time	Scale	Operator	Inbound		
In	07/22/2011 11:29:05	SCALE 1	lmercer		Gross	103480 lb
Out	07/22/2011 11:29:05		lmercer		Tare	39100 lb
					Net	64380 lb
					Tons	32.19

Comments MANIFEST V2301 KOOY YE

	Product	LD%	Qty	UOM	Rate	Tax	Amount	Origin
1	Daily Cover-PCS-Tons-Pet	100	32.19	Tons				KING
2	GONDOLA 16.10/TN-GONDOLA	100	32.19	Tons				KING
3	LOCT$8.76W/32TON MIN-LOC	100	32.19	Tons				KING

Total Tax
Total Ticket

203WM Driver's Signature

BILL OF LADING/SCALE TICKET

WASTE MANAGEMENT

BOEING # V23Ø1 7/22/11 SUB HAUL BLDG# 3-38Ø

Generators Name & Address:
BOEING CO - NORTH BOEING FIELD
75ØØ E. MARGINAL WAY S.
SEATTLE, WA. 98108

Billing: BOEING
Contact Person: DAVE OSKAMP
Contact Number: (206) 662-7347
Fax Number:

Acknowledgement of Loading

Name (Please Print)

Signature

BOEING CO. / NORTH BOEING FIELD
Company

7/22/11
Date

Deliver To:

ALASKA RELOAD & RECYCLING FACILITY
70 SOUTH ALASKA STREET
SEATTLE, WASHINGTON 98134
TELEPHONE #: (206) 763-5025
MONDAY FRIDAY 7:00AM-4:00PM

Disposal Facility:

COLUMBIA RIDGE LANDFILL AND
RECYCLING FACILITY
18177 CEDAR SPRINGS LANE
ARLINGTON, OREGON 97812
TELEPHONE: (541) 454-2030

Transporter Name:
R TRANSPORT

Truck #: W-14 (Kaag)

Waste Profile # 1Ø259ØWA

Waste Type: ADC

Expiration Date: Ø1/Ø7/12

TRUS CHASE
Driver's Name (Please Print)

Trus Chase
SIGNATURE

Remarks: 1-7+P (TURUS)

WASTE MANAGEMENT

Alaska Street
70 S Alaska Street
Seattle, WA, 98134

Original
Ticket# 31253

Ph: 206 763 5025

Customer Name BOEING BOEING
Ticket Date 07/22/2011
Payment Type Credit Account
Manual Ticket#
Route AK
Hauling Ticket#
Destination
PO# 102596WA

Carrier SELF HAULER *
Vehicle# H20
Volume
Container
Driver DON AVERY
Check#
Billing# 0000013
Grid

	Time	Scale	Operator	Inbound		
In	07/22/2011 10:30:04	SCALE 1	YEVANS		Gross	101520 lb*
Out	07/22/2011 10:30:04		YEVANS		Tare	40560 lb*
					Net	60960 lb
			* Manual Weight		Tons	30.48

Comments REPLACE#31123 PROFILE#102596WA V2269 HC JM

	Product	LD%	Qty	UOM	Rate	Tax	Amount	Origin
1	Daily Cover-PCS-Tons-Pet	100	30.48	Tons				KING
2	GONDOLA 16.10/TN-GONDOLA	100	30.48	Tons				

Total Tax
Total Ticket

203WM Driver's Signature

WASTE MANAGEMENT

Alaska Street
70 S Alaska Street
Seattle, WA, 98134

Original
Ticket# 31123

Ph: 206 763 5025

Customer Name BOEING BOEING
Ticket Date 07/22/2011
Payment Type Credit Account
Manual Ticket#
Route AK
Hauling Ticket#
Destination
PO# 102596WA

Carrier SELF HAULER *
Vehicle# H20
Volume
Container
Driver DON AVERY
Check#
Billing# 0000013
Grid

	Time	Scale	Operator	Inbound		
In	07/22/2011 10:30:04	SCALE 1	lmercer		Gross	101520 lb*
Out	07/22/2011 10:30:04		lmercer		Tare	40560 lb*
					Net	60960 lb
			* Manual Weight		Tons	30.48

Comments V2269 HC JM

Void remove Trans Charge
New #31253

	Product	LD%	Qty	UOM	Rate	Tax	Amount	Origin
1	Daily Cover-PCS-Tons-Pet	100	30.48	Tons				KING
2	GONDOLA 16.10/TN-GONDOLA	100	30.48	Tons				KING
3	LOCT$8.76W/32TON MIN-LOC	100	30.48	Tons				KING

Total Tax
Total Ticket

203WM Driver's Signature

BILL OF LADING/SCALE TICKET

WASTE MANAGEMENT

BOEING #V2269

Generators Name & Address:
BOEING CO. - NORTH BOEING FIELD
7500 S. MARGINAL WAY S.
SEATTLE, WA. 98108

Billing: BOEING CO.
Contact Person: MARY JO DONNELLY
Contact Number: (206) 662-2534
Fax Number: (425) 294-9263

Acknowledgement of Loading

FRED WALLACE
Name (Please Print)

Signature

BOEING - NORTH FIELD
Company

7/21/11
Date

Deliver To:

ALASKA RELOAD & RECYCLING FACILITY
70 SOUTH ALASKA STREET
SEATTLE, WASHINGTON 98134
TELEPHONE #: (206) 763-5025
MONDAY-FRIDAY 7:00AM-4:00PM

Disposal Facility:

COLUMBIA RIDGE LANDFILL AND
RECYCLING FACILITY
18177 CEDAR SPRINGS LANE
ARLINGTON, OREGON 97812
TELEPHONE: (541) 454-2030

Transporter Name: (SELF HAUL)
HARLOW CONST

Truck #: #20/DT

Waste Profile # 102596WA

Waste Type: ADC

Expiration Date: 01/07/12

DON AVERY
Driver's Name (Please Print)

SIGNATURE

Remarks: DT/SELF HAUL (60 yds)

WASTE MANAGEMENT

Alaska Street
70 S Alaska Street
Seattle, WA, 98134

Reprint
Ticket# 31254

Ph: 206 763 5025

Customer Name BOEING BOEING
Ticket Date 07/22/2011
Payment Type Credit Account
Manual Ticket#
Route
Hauling Ticket#
Destination
PO# 102596WA

Carrier SELF HAULER *
Vehicle# H24
Container
Driver KEVIN UNMILLER
Check#
Billing# 0000013
Grid

Volume

	Time	Scale	Operator	Inbound		
In	07/22/2011 10:39:47	SCALE 1	YEVANS		Gross	105360 lb*
Out	07/22/2011 10:39:47		YEVANS		Tare	63760 lb*
					Net	41600 lb
			* Manual Weight		Tons	20.80

Comments Replaces #31125 HC JM
V22109

	Product	LD%	Qty	UOM	Rate	Tax	Amount	Origin
1	Daily Cover-PCS-Tons-Pet	100	20.80	Tons				KING
2	GONDOLA 16.10/TN-GONDOLA	100	20.80	Tons				

Total Tax
Total Ticket

203 Driver's Signature

WASTE MANAGEMENT

Alaska Street
70 S Alaska Street
Seattle, WA, 98134

Original
Ticket# 31125

Ph: 206 763 5025

Customer Name BOEING BOEING
Ticket Date 07/22/2011
Payment Type Credit Account
Manual Ticket#
Route
Hauling Ticket#
Destination
PO# 102596WA

Carrier SELF HAULER *
Vehicle# H24
Volume
Container
Driver KEVIN UNMILLER
Check#
Billing# 0000013
Grid

	Time	Scale	Operator	Inbound		
In	07/22/2011 10:39:47	SCALE 1	lmercer		Gross	105360 lb
Out	07/22/2011 10:50:01	SCALE 1	lmercer		Tare	41600 lb
					Net	63760 lb
					Tons	31.88

Comments V2269

Void remove trans charge
New # 31254

	Product	LDX	Qty	UOM	Rate	Tax	Amount	Origin
1	Daily Cover-PCS-Tons-Pet	100	31.88	Tons				KING
2	GONDOLA 16.10/TN-GONDOLA	100	31.88	Tons				KING
3	LOCT$8.76W/32TON MIN-LOC	100	31.88	Tons				KING

Total Tax
Total Ticket

203WM
Driver's Signature

BILL OF LADING/SCALE TICKET

WM WASTE MANAGEMENT

BOEING # V2269

Generators Name & Address:
BOEING CO. - NORTH BOEING FIELD
7500 E. MARGINAL WAY S.
SEATTLE, WA. 98108

Billing: BOEING CO.
Contact Person: MARY JO DONNELLY
Contact Number: (206) 662-2534
Fax Number: (425) 294-9263

Acknowledgement of Loading

FRED WALLACE
Name (Please Print)

BOEING - NORTH FIELD
Company

Signature

7/21/11
Date

Deliver To:

ALASKA RELOAD & RECYCLING FACILITY
70 SOUTH ALASKA STREET
SEATTLE, WASHINGTON 98134
TELEPHONE #: (206) 763-5025
MONDAY-FRIDAY 7:00AM-4:00PM

Disposal Facility:

COLUMBIA RIDGE LANDFILL AND
RECYCLING FACILITY
18177 CEDAR SPRINGS LANE
ARLINGTON, OREGON 97812
TELEPHONE: (541) 454-2030

Transporter Name: (SELF HAUL)
HARLOW CONST

Truck #: 2A/2AT

Waste Profile # 102596WA

Waste Type: ADC

Expiration Date: 01/07/12

Driver's Name (Please Print)

SIGNATURE

Remarks: DT/SELF HAUL (60%)

WASTE MANAGEMENT

Alaska Street
70 S Alaska Street
Seattle, WA, 98134

Original
Ticket# 31255

Ph: 206 763 5025

Customer Name BOEING BOEING
Ticket Date 07/22/2011
Payment Type Credit Account
Manual Ticket#
Route AK
Hauling Ticket#
Destination
PO# 102596WA

Carrier SELF HAULER *
Vehicle# H16 Volume
Container
Driver DON HUMPHREY
Check#
Billing# 0000013
Grid

	Time	Scale	Operator	Inbound		
In	07/22/2011 10:34:56	SCALE 1	YEVANS		Gross	103920 lb*
Out	07/22/2011 10:34:56		YEVANS		Tare	42020 lb*
					Net	61900 lb
			* Manual Weight		Tons	30.95

Comments REPLACES#31124 V2269 HC JM

	Product	LD%	Qty	UOM	Rate	Tax	Amount	Origin
1	Daily Cover-PCS-Tons-Pet	100	30.95	Tons				KING
2	GONDOLA 16.10/TN-GONDOLA	100	30.95	Tons				

Total Tax
Total Ticket

203 Driver's Signature

WASTE MANAGEMENT

Alaska Street
70 S Alaska Street
Seattle, WA, 98134

Original
Ticket# 31124

Ph: 206 763 5025

Customer Name BOEING BOEING
Ticket Date 07/22/2011
Payment Type Credit Account
Manual Ticket#
Route AK
Hauling Ticket#
Destination
PO# 102596WA

Carrier SELF HAULER *
Vehicle# H16
Volume
Container
Driver DON HUMPHREY
Check#
Billing# 0000013
Grid

	Time	Scale	Operator	Inbound		
In	07/22/2011 10:34:56	SCALE 1	lmercer		Gross	103920 lb*
Out	07/22/2011 10:34:56		lmercer		Tare	42020 lb*
					Net	61900 lb
			* Manual Weight		Tons	30.95

Comments V2269 HC JM

Void remove trans charge
New #312SS

	Product	LD%	Qty	UOM	Rate	Tax	Amount	Origin
1	Daily Cover-PCS-Tons-Pet	100	30.95	Tons				KING
2	GONDOLA 16.10/TN-GONDOLA	100	30.95	Tons				KING
3	LOCT$8.76W/32TON MIN-LOC	100	30.95	Tons				KING

Total Tax
Total Ticket

203WM Driver's Signature D. H.

BILL OF LADING/SCALE TICKET

WM WASTE MANAGEMENT

BOEING # V2269

Generators Name & Address:
BOEING CO. - NORTH BOEING FIELD
7500 E. MARGINAL WAY S.
SEATTLE, WA. 98108

Billing: BOEING CO.
Contact Person: MARY JO DONNELLY
Contact Number: (206) 662-2534
Fax Number: (425) 294-9263

Acknowledgement of Loading

FRED WALLACE — Name (Please Print)
BOEING - NORTH FIELD — Company
Signature
7/21/11 — Date

Deliver To:

ALASKA RELOAD & RECYCLING FACILITY
70 SOUTH ALASKA STREET
SEATTLE, WASHINGTON 98134
TELEPHONE #: (206) 763-5025
MONDAY-FRIDAY 7:00AM-4:00PM

Disposal Facility:

COLUMBIA RIDGE LANDFILL AND
RECYCLING FACILITY
18177 CEDAR SPRINGS LANE
ARLINGTON, OREGON 97812
TELEPHONE: (541) 454-2030

Transporter Name: (SELF HAUL) HARLOW CONST

Truck #: 16/16T

Waste Profile # 102596WA

Waste Type: ADC

Expiration Date: 01/07/12

Driver's Name (Please Print)

SIGNATURE

Remarks: DT / SELF HAUL (60 MS)

WASTE MANAGEMENT

Alaska Street
70 S Alaska Street
Seattle, WA. 98134

Reprint
Ticket# 31123

Ph: 206 763 5025

Customer Name BOEING BOEING
Ticket Date 07/22/2011
Payment Type Credit Account
Manual Ticket#
Route AK
Hauling Ticket#
Destination
PO# 102396WA

Carrier SELF HAULER *
Vehicle# H20
Container
Driver DON AVERY
Check#
Billing# 0000013
Grid

Volume

	Time	Scale	Operator	Inbound		
In	07/22/2011 10:30:04	SCALE 1	lmercer		Gross	101520 lb*
Out	07/22/2011 10:30:04		lmercer		Tare	40560 lb*
					Net	60960 lb
			* Manual Weight		Tons	30.48

Comments V2269 HC JM

	Product	LD%	Qty	UOM	Rate	Tax	Amount	Origin
1	Daily Cover-PCS-Tons-Pet	100	30.48	Tons				KING
2	GONDOLA 16.10/TN-GONDOLA	100	30.48	Tons				KING
3	LOCT$8.76W/32TON MIN-LOC	100	30.48	Tons				KING

Total Tax
Total Ticket

203WM
Driver's Signature

replaced by ticket 31253

WASTE MANAGEMENT

Alaska Street
70 S Alaska Street
Seattle, WA, 98134

Reprint
Ticket# 31124

Ph: 206 763 5025

Customer Name BOEING BOEING
Ticket Date 07/22/2011
Payment Type Credit Account
Manual Ticket#
Route AK
Hauling Ticket#
Destination
PO# 102596WA

Carrier SELF HAULER *
Vehicle# HIB
Container
Driver DON HUMPHREY
Check#
Billing# 0000013
Grid

Volume

	Time	Scale	Operator	Inbound		
In	07/22/2011 10:34:56	SCALE 1	lmercer		Gross	103920 lb*
Out	07/22/2011 10:34:56		lmercer		Tare	42020 lb*
					Net	61900 lb
			* Manual Weight		Tons	30.95

Comments V2269 HC JM

	Product	LDX	Qty	UOM	Rate	Tax	Amount	Origin
1	Daily Cover-PCS-Tons-Pet	100	30.95	Tons				KING
2	GONDOLA 16.10/TN-GONDOLA	100	30.95	Tons				KING
3	LOCT$8.76W/32TON MIN-LOC	100	30.95	Tons				KING

Total Tax
Total Ticket

203WM
Driver's Signature

replaced by ticket 31255

WASTE MANAGEMENT

Alaska Street
70 S Alaska Street
Seattle, WA, 98134

Reprint
Ticket# 31125

Ph: 206 763 5025

Customer Name BOEING BOEING
Ticket Date 07/22/2011
Payment Type Credit Account
Manual Ticket#
Route
Hauling Ticket#
Destination
PO# 102596WA

Carrier SELF HAULER *
Vehicle# H24
Container
Driver KEVIN UNMILLER
Check#
Billing# 0000013
Grid

Volume

	Time	Scale	Operator	Inbound		
In	07/22/2011 10:39:47	SCALE 1	lmercer		Gross	105360 lb
Out	07/22/2011 10:50:01	SCALE 1	lmercer		Tare	41600 lb
					Net	63760 lb
					Tons	31.88

Comments V2269

	Product	LD%	Qty	UOM	Rate	Tax	Amount	Origin
1	Daily Cover-RCS-Tons-Pet	100	31.88	Tons				KING
2	GONDOLA 16.10/TN-GONDOLA	100	31.88	Tons				KING
3	LOCT#6.76W/32TON MIN-LOC	100	31.88	Tons				KING

Total Tax
Total Ticket

203WM
Driver's Signature

replaced by ticket 31254

WASTE MANAGEMENT

Alaska Street
70 S Alaska Street
Seattle, WA, 98134

Reprint
Ticket# 31509

Ph: 206 763 5025

Customer Name BOEING BOEING
Ticket Date 08/03/2011
Payment Type Credit Account
Manual Ticket#
Route AK
Hauling Ticket#
Destination
PO# 102596WA

Carrier SELF HAULER *
Vehicle# H29T
Container
Driver JIM BRIGHT
Check#
Billing# 0000013
Grid

Volume

	Time	Scale	Operator	Inbound		
In	08/03/2011 07:56:33	SCALE 1	lmercer		Gross	99540 lb
Out	08/03/2011 08:13:34	SCALE 1	lmercer		Tare	41900 lb
					Net	57640 lb
					Tons	28.82

Comments HARLOW - LM (V2413) 39

Jim Bright

	Product	LD#	Qty	UOM	Rate	Tax	Amount	Origin
1	Daily Cover-PCS-Tons-Pet	100	28.82	Tons				KING
2	GONDOLA 16.10/TN-GONDOLA	100	28.82	Tons				KING
3	LOCT$8.76W/32TON MIN-LOC	100	28.82	Tons				KING

Total Tax
Total Ticket

Driver's Signature

203WM

BILL OF LADING/SCALE TICKET

replaced by ticket 31578

WASTE MANAGEMENT

BOEING # V2413

Generators Name & Address:
BOEING CO. - NORTH BOEING FIELD
7500 E. MARGINAL WAY S.
SEATTLE, WA. 98108

Billing: BOEING CO.
Contact Person: MARY JO DONNELLY
Contact Number: (206) 662-2534
Fax Number: (425) 294-9263

Acknowledgement of Loading

Jennifer Parsons
Name (Please Print)

Jennifer Parsons
Signature

BOEING - NORTH FIELD
Company

8/2/11
Date

Deliver To:

ALASKA RELOAD & RECYCLING FACILITY
70 SOUTH ALASKA STREET
SEATTLE, WASHINGTON 98134
TELEPHONE #: (206) 763-5025
MONDAY-FRIDAY 7:00AM-4:00PM

Disposal Facility:

COLUMBIA RIDGE LANDFILL AND
RECYCLING FACILITY
18177 CEDAR SPRINGS LANE
ARLINGTON, OREGON 97812
TELEPHONE: (541) 454-2030

Transporter Name: (SELF HAUL)
Harlow

Truck #: H29T

Waste Profile # 102596WA

Waste Type: ADC

Expiration Date: 01/07/12

Jim Bright
Driver's Name (Please Print)

NBF Streamline Reroute
Stockpile 2 & 5

SIGNATURE

Remarks: 3 DT/SELF HAUL (TURNS) 8/2/11 THRU 8/4/11

COPY

PA

DT

TM Field
Company

Date

OFILLAND
LANE
97812
-2030

1025964WA

SC

01/07/12

WASTE MANAGEMENT

Alaska Street
70 S Alaska Street
Seattle, WA, 98134

Reprint
Ticket# 31317

Ph: 206 763 5025

Customer Name BOEING
Ticket Date 08/03/2011
Payment Type Credit Account
Manual Ticket#
Route AF
Hauling Ticket#
Destination
PO# 10250644

Carrier SELF HAULER
Vehicle# H29T
Container
Driver JIM BRIGHT
Check#
Billing# 90000013
Grid

Volume

	Time	Scale	Operator	Inbound		
In	08/03/2011 09:13:59	SCALE 1	Jaencer		Gross	113080 lbs
Out	08/03/2011 09:13:59		Jaencer		Tare	41900 lbs
			* Manual Weight		Net	71180 lb
					Tons	35.59

Comment: TRACTOR LE (009130)

	Product	Qty	Qty	Unit	Rate	Tax	Amount	Origin
1	Daily Cover-Clean-Soil-Wet	100	35.59	Tons				King
2	GONDOLA [illegible]/TN-GONDOLA	100	[illegible]	Tons				King
3	LOCT18.76W/32TON MIN 1.00	100	35.59	Tons				King

Total Tax
Total Ticket

Driver's Signature

203WM

Remarks: DT/SELF HAUL (TUE M5)

SIGNATURE

Wine Route
Receipt # 2 of 5

8/8/11 THRU 8/11/11

BILL OF LADING/SCALE TICKET

replaced by ticket 31556

WASTE MANAGEMENT

BOEING # V2413

Generators Name & Address:
BOEING CO. - NORTH BOEING FIELD
7500 E. MARGINAL WAY S.
SEATTLE, WA. 98108

Billing: BOEING CO.
Contact Person: MARY JO DONNELLY
Contact Number: (206) 662-2534
Fax Number: (425) 294-9263

Acknowledgement of Loading

Jennifer Parsons
Name (Please Print)

Jennifer Parsons
Signature

BOEING - NORTH FIELD
Company

8/2/11
Date

Deliver To:

ALASKA RELOAD & RECYCLING FACILITY
70 SOUTH ALASKA STREET
SEATTLE, WASHINGTON 98134
TELEPHONE #: (206) 763-5025
MONDAY-FRIDAY 7:00AM-4:00PM

Disposal Facility:

COLUMBIA RIDGE LANDFILL AND
RECYCLING FACILITY
18177 CEDAR SPRINGS LANE
ARLINGTON, OREGON 97812
TELEPHONE: (541) 454-2030

Transporter Name: (SELF HAUL)
Harlow

Truck #: H29T

Waste Profile # 1Ø2596WA

Waste Type: ADC

Expiration Date: Ø1/07/12

Jim Bright
Driver's Name (Please Print)

NBF Streamline Reroute
Stockpile 2 & 5

SIGNATURE

Remarks: 3 DT/SELF HAUL (TURNS) 8/2/11 THRU 8/4/11

WASTE MANAGEMENT

Alaska Street
70 S Alaska Street
Seattle, WA, 98134

Reprint
Ticket# 31525

Ph: 206 763 5025

Customer Name BOEING BOEING
Ticket Date 08/03/2011
Payment Type Credit Account
Manual Ticket#
Route AK
Hauling Ticket#
Destination
PO# 102596WA

Carrier SELF HAULER *
Vehicle# H29S
Container
Driver JIM BRIGHT
Check#
Billing# 0000013
Grid

Volume

	Time	Scale	Operator	Inbound		
In	08/03/2011 10:18:06	SCALE 1	lmercer		Gross	105420 lb
Out	08/03/2011 10:18:06		lmercer		Tare	41900 lb
					Net	63520 lb
					Tons	31.76

Comments HARLOW - LM (V2413)

	Product	LD%	Qty	UOM	Rate	Tax	Amount	Origin
1	Daily Cover-PCS-Tons-Pet	100	31.76	Tons				KING
2	GONDOLA 16.10/TN-GONDOLA	100	31.76	Tons				
3	LOCT$8.76W/32TON MIN-LOC	100	31.76	Tons				

Total Tax
Total Ticket

203 Driver's Signature

BILL OF LADING/SCALE TICKET

replaced by ticket 31567

WASTE MANAGEMENT

BOEING # V2413

Generators Name & Address:
BOEING CO. - NORTH BOEING FIELD
7500 E. MARGINAL WAY S.
SEATTLE, WA. 98108

Billing: BOEING CO.
Contact Person: MARY JO DONNELLY
Contact Number: (206) 662-2534
Fax Number: (425) 294-9263

Acknowledgement of Loading

Jennifer Parsons
Name (Please Print)

Jennifer Parsons
Signature

BOEING - NORTH FIELD
Company

8/2/11
Date

Deliver To:

ALASKA RELOAD & RECYCLING FACILITY
70 SOUTH ALASKA STREET
SEATTLE, WASHINGTON 98134
TELEPHONE #: (206) 763-5025
MONDAY-FRIDAY 7:00AM-4:00PM

Disposal Facility:

COLUMBIA RIDGE LANDFILL AND
RECYCLING FACILITY
18177 CEDAR SPRINGS LANE
ARLINGTON, OREGON 97812
TELEPHONE: (541) 454-2030

Transporter Name: (SELF HAUL)
Harlow

Truck #: H29T

Waste Profile # 102596WA

Waste Type: ADC

Expiration Date: 01/07/12

Jim Bright
Driver's Name (Please Print)

NBF Stormline Reroute
Stockpile 2 & 5

SIGNATURE

Remarks: 3 DT/SELF HAUL (TURNS) 8/2/11 THRU 8/4/11

WASTE MANAGEMENT

Alaska Street
70 S Alaska Street
Seattle, WA, 98134

Reprint
Ticket# 31533

Ph: 206 763 5025

Customer Name JAY DEE COLUCCIO MICHAELS JAY
Ticket Date 08/03/2011
Payment Type Credit Account
Manual Ticket#
Route AK
Hauling Ticket#
Destination
PO# 108542OR

Carrier SELF HAULER *
Vehicle# F1570T
Volume
Container
Driver JIM ALVORATO
Check#
Billing# 0000202
Grid

	Time	Scale	Operator	Inbound		
In	08/03/2011 11:27:07	SCALE 1	lmercer		Gross	96920 lb
Out	08/03/2011 11:27:07		lmercer		Tare	38680 lb
					Net	58240 lb
					Tons	29.12

Comments FRANK C. /BE

	Product	LD%	Qty	UOM	Rate	Tax	Amount	Origin
1	Spcl Benef. Use-Tons-Spe	100	29.12	Tons				KING
2	ENVFEE$4.49-ENV FEE $4.4	100	29.12	Tons				
3	GONDOLA 16.10/TN-GONDOLA	100	29.12	Tons				

Total Tax
Total Ticket

Driver's Signature

2039

BILL OF LADING/SCALE TICKET

WASTE MANAGEMENT

BOEING # V2413

Generators Name & Address:
BOEING CO. - NORTH BOEING FIELD
7500 E. MARGINAL WAY S.
SEATTLE, WA. 98108

Billing: BOEING CO.
Contact Person: MARY JO DONNELLY
Contact Number: (206) 662-2534
Fax Number: (425) 294-7263

Acknowledgement of Loading

Jennifer Parsons
Name (Please Print)

Jennifer Parsons
Signature

BOEING - NORTH FIELD
Company

8/2/11
Date

Deliver To:

ALASKA RELOAD & RECYCLING FACILITY
70 SOUTH ALASKA STREET
SEATTLE, WASHINGTON 98134
TELEPHONE #: (206) 763-5025
MONDAY-FRIDAY 7:00AM-4:00PM

Disposal Facility:

COLUMBIA RIDGE LANDFILL AND
RECYCLING FACILITY
18177 CEDAR SPRINGS LANE
ARLINGTON, OREGON 97812
TELEPHONE: (541) 454-2030

Transporter Name: (SELF HAUL)
Harlow

Truck #: 29

Waste Profile # 102596WA

Waste Type: ADC

Expiration Date: 01/07/12

Jim Bright
Driver's Name (Please Print)

SIGNATURE

NBF Stormline Reroute
Stockpiles 2 & 5

Remarks: 3 DT/SELF HAUL (TURNS) 8/2/11 THRU 8/4/11

WASTE MANAGEMENT

Alaska Street
70 S Alaska Street
Seattle, WA, 98134

Reprint
Ticket# 31539

Ph: 206 763 5025

Customer Name BOEING BOEING
Ticket Date 08/03/2011
Payment Type Credit Account
Manual Ticket#
Route AK
Hauling Ticket#
Destination
PO# 102596WA

Carrier SELF HAULER *
Vehicle# H29T
Container
Driver JIM BRIGHT
Check#
Billing# 0000013
Grid

Volume

	Time	Scale	Operator	Inbound		
In	08/03/2011 12:30:23	SCALE 1	lmercer		Gross	98780 lb
Out	08/03/2011 12:30:23		lmercer		Tare	41900 lb
					Net	56880 lb
					Tons	28.44

Comments HARLOW - LM (V2413) 102596WA

	Product	LD%	Qty	UOM	Rate	Tax	Amount	Origin
1	Daily Cover-PCS-Tons-Pet	100	28.44	Tons				KING
2	GONDOLA 16.10/TN-GONDOLA	100	28.44	Tons				
3	LOCT$8.76W/32TON MIN-LOC	100	28.44	Tons				

Total Tax
Total Ticket

Driver's Signature

203WM

BILL OF LADING/SCALE TICKET

replaced by ticket 35569

WASTE MANAGEMENT

BOEING # V2413

Generators Name & Address:
BOEING CO. - NORTH BOEING FIELD
7500 E. MARGINAL WAY S.
SEATTLE, WA. 98108

Billing: BOEING CO.
Contact Person: MARY JO DONNELLY
Contact Number: (206) 662-2534
Fax Number: (425) 294-9263

Acknowledgement of Loading

Jennifer Parsons
Name (Please Print)

Jennifer Parsons
Signature

BOEING - NORTH FIELD
Company

8/2/11
Date

Deliver To:

ALASKA RELOAD & RECYCLING FACILITY
70 SOUTH ALASKA STREET
SEATTLE, WASHINGTON 98134
TELEPHONE #: (206) 763-5025
MONDAY-FRIDAY 7:00AM-4:00PM

Disposal Facility:

COLUMBIA RIDGE LANDFILL AND
RECYCLING FACILITY
18177 CEDAR SPRINGS LANE
ARLINGTON, OREGON 97812
TELEPHONE: (541) 454-2030

Transporter Name: (SELF HAUL)

Truck #: H29T

Waste Profile # 102596WA

Waste Type: ADC

Expiration Date: 01/07/12

Jim Bright
Driver's Name (Please Print)

NBF Stormline Reroute
Stockpile 285

SIGNATURE

Remarks: 3 DT/SELF HAUL (TUPMS) 8/2/11 THRU 8/4/11

WASTE MANAGEMENT

Alaska Street
70 S Alaska Street
Seattle, WA, 98134

Reprint
Ticket# 31554

Ph: 206 763 5025

Customer Name BOEING BOEING
Ticket Date 08/03/2011
Payment Type Credit Account
Manual Ticket#
Route AK
Hauling Ticket#
Destination
PO# 102596WA

Carrier SELF HAULER *
Vehicle# H29T
Volume
Container
Driver JIM BRIGHT
Check#
Billing# 0000013
Grid

	Time	Scale	Operator	Inbound		
In	08/03/2011 13:46:08	SCALE 1	lmercer		Gross	109740 lb
Out	08/03/2011 13:46:08		lmercer		Tare	41900 lb
					Net	67840 lb
					Tons	33.92

Comments HARLOW - LM (V2413)

	Product	LD%	Qty	UOM	Rate	Tax	Amount	Origin
1	Daily Cover-PCS-Tons-Pet	100	33.92	Tons				KING
2	GONDOLA 16.10/TN-GONDOLA	100	33.92	Tons				
3	LOCT$8.76W/32TON MIN-LOC	100	33.92	Tons				

Total Tax
Total Ticket

203WM Driver's Signature

BILL OF LADING/SCALE TICKET

replaced by ticket 31573

WASTE MANAGEMENT

BOEING # V2413

Generators Name & Address:
BOEING CO. - NORTH BOEING FIELD
7500 E. MARGINAL WAY S.
SEATTLE, WA. 98108

Billing: BOEING CO.
Contact Person: MARY JO DONNELLY
Contact Number: (206) 662-2534
Fax Number: (425) 294-9263

Acknowledgement of Loading

Jennifer Parsons
Name (Please Print)

Jennifer Parsons
Signature

BOEING - NORTH FIELD
Company

8/2/11
Date

Deliver To:

ALASKA RELOAD & RECYCLING FACILITY
70 SOUTH ALASKA STREET
SEATTLE, WASHINGTON 98134
TELEPHONE #: (206) 763-5025
MONDAY-FRIDAY 7:00AM-4:00PM

Disposal Facility:

COLUMBIA RIDGE LANDFILL AND
RECYCLING FACILITY
18177 CEDAR SPRINGS LANE
ARLINGTON, OREGON 97812
TELEPHONE: (541) 454-2030

Transporter Name: (SELF HAUL)
Harlow

Truck #: H29T

Waste Profile # 102596WA

Waste Type: ADC

Expiration Date: 01/07/12

Jim Bright
Driver's Name (Please Print)

NBF Streamline Reroute
Stockpile 2 & 5

SIGNATURE

Remarks: 3 DT/SELF HAUL (TURNS) 8/2/11 THRU 8/4/11

WASTE MANAGEMENT

Alaska Street
70 S Alaska Street
Seattle, WA, 98134

Reprint
Ticket# 31557

Ph: 206 763 5025

Customer Name BOEING BOEING
Ticket Date 08/03/2011
Payment Type Credit Account
Manual Ticket#
Route AK
Hauling Ticket#
Destination
PO# 102596WA

Carrier SELF HAULER *
Vehicle# H32T
Volume
Container
Driver ROBERT JOHNSTAD
Check#
Billing# 0000013
Grid

	Time	Scale	Operator	Inbound		
In	08/03/2011 14:12:00	SCALE 1	lmercer		Gross	100380 lb
Out	08/03/2011 14:32:26	SCALE 1	lmercer		Tare	41740 lb
					Net	58640 lb
					Tons	29.32

Comments HARLOW - LM (V2413)

	Product	LD%	Qty	UOM	Rate	Tax	Amount	Origin
1	Daily Cover-PCS-Tons-Pet	100	29.32	Tons				KING
2	GONDOLA 16.10/TN-GONDOLA	100	29.32	Tons				KING
3*	LOCT$8.76W/32TON MIN-LOC	100	29.32	Tons				KING

Total Tax
Total Ticket

203WM Driver's Signature

BILL OF LADING/SCALE TICKET

replaced by ticket 51575

WASTE MANAGEMENT

BOEING # V2413

Generators Name & Address:
BOEING CO. - NORTH BOEING FIELD
7500 E. MARGINAL WAY S.
SEATTLE, WA. 98108

Billing: BOEING CO.
Contact Person: MARY JO DONNELLY
Contact Number: (206) 662-2534
Fax Number: (425) 294-9263

Acknowledgement of Loading

Jennifer Parsons
Name (Please Print)

BOEING - NORTH FIELD
Company

Jennifer Parsons
Signature

8/2/11
Date

Deliver To:

ALASKA RELOAD & RECYCLING FACILITY
70 SOUTH ALASKA STREET
SEATTLE, WASHINGTON 98134
TELEPHONE #: (206) 763-5025
MONDAY-FRIDAY 7:00AM-4:00PM

Disposal Facility:

COLUMBIA RIDGE LANDFILL AND
RECYCLING FACILITY
18177 CEDAR SPRINGS LANE
ARLINGTON, OREGON 97812
TELEPHONE: (541) 454-2030

Transporter Name: (SELF HAUL)
Harlow

Waste Profile # 102596WA

Truck #: H32 T

Waste Type: ADC

Expiration Date: 01/07/12

Robert T Johnstad
Driver's Name (Please Print)

NBF Stormline Reroute
Stockpiles 2 & 5

Robert Johnstad
SIGNATURE

Remarks: 3 DT/SELF HAUL (TURNS) 8/2/11 THRU 8/4/11

WASTE MANAGEMENT

Alaska Street
70 S Alaska Street
Seattle, WA, 98134

Reprint
Ticket# 31558

Ph: 206 763 5025

Customer Name BOEING BOEING
Ticket Date 08/03/2011
Payment Type Credit Account
Manual Ticket#
Route AK
Hauling Ticket#
Destination
PO# 102596WA

Carrier SELF HAULER *
Vehicle# H33 Volume
Container
Driver RANDY HUGH
Check#
Billing# 0000013
Grid

	Time	Scale	Operator	Inbound		
In	08/03/2011 14:22:41	SCALE 1	lmercer		Gross	102180 lb
Out	08/03/2011 14:22:41		lmercer		Tare	42100 lb
					Net	60080 lb
					Tons	30.04

Comments HARLOW - LM (V2413)

	Product	LD%	Qty	UOM	Rate	Tax	Amount	Origin
1	Daily Cover-PCS-Tons-Pet	100	30.04	Tons				KING
2	GONDOLA 16.10/TN-GONDOLA	100	30.04	Tons				
3	LOCT$8.76W/32TON MIN-LOC	100	30.04	Tons				

Total Tax
Total Ticket

203 Driver's Signature

BILL OF LADING/SCALE TICKET

WASTE MANAGEMENT

BOEING # V2413

Generators Name & Address:
BOEING CO. - NORTH BOEING FIELD
7500 E. MARGINAL WAY S.
SEATTLE, WA. 98108

Billing: BOEING CO.
Contact Person: MARY JO DONNELLY
Contact Number: (206) 662-2534
Fax Number: (425) 294-9263

Acknowledgement of Loading

Jennifer Parsons
Name (Please Print)

BOEING - NORTH FIELD
Company

Jennifer Parsons
Signature

8/2/11
Date

Deliver To:

ALASKA RELOAD & RECYCLING FACILITY
70 SOUTH ALASKA STREET
SEATTLE, WASHINGTON 98134
TELEPHONE # (206) 763-5025

Disposal Facility:

COLUMBIA RIDGE LANDFILL AND
RECYCLING FACILITY
18177 CEDAR SPRINGS LANE
ARLINGTON, OREGON 97812

WASTE MANAGEMENT

Alaska Street
70 S Alaska Street
Seattle, WA, 98134

Original
Ticket# 31566

Ph: 206 763 5025

Customer Name BOEING BOEING
Ticket Date 08/03/2011
Payment Type Credit Account
Manual Ticket#
Route AK
Hauling Ticket#
Destination
PO# 102596WA

Carrier SELF HAULER *
Vehicle# H29T
Volume
Container
Driver JIM BRIGHT
Check#
Billing# 0000013
Grid

	Time	Scale	Operator	Inbound		
In	08/03/2011 09:13:59	SCALE 1	lmercer		Gross	113500 lb*
Out	08/03/2011 09:13:59		lmercer		Tare	41900 lb*
					Net	71780 lb
			* Manual Weight		Tons	35.89

Comments HARLOW - LM (V2413) REPLACES VOIDED # 31517

	Product	LD%	Qty	UOM	Rate	Tax	Amount	Origin
1	Daily Cover-PCS-Tons-Pet	100	35.89	Tons				KING
2	GONDOLA 16.10/TN-GONDOLA	100	35.89	Tons				

Total Tax
Total Ticket

203WM
Driver's Signature

WASTE MANAGEMENT

Alaska Street
70 S Alaska Street
Seattle, WA, 98134

Original
Ticket# 31517

Ph: 206 763 5025

Customer Name BOEING BOEING
Ticket Date 08/03/2011
Payment Type Credit Account
Manual Ticket#
Route AK
Hauling Ticket#
Destination
PO# 102596WA

Carrier SELF HAULER *
Vehicle# H295
Volume
Container
Driver JIM BRIGHT
Check#
Billing# 0000013
Grid

	Time	Scale	Operator	Inbound		
In	08/03/2011 09:13:59	SCALE 1	lmercer		Gross	113680 lb*
Out	08/03/2011 09:13:59		lmercer		Tare	41900 lb*
					Net	71780 lb
			* Manual Weight		Tons	35.89

Comments HARLOW - LM (V2413)

	Product	LD%	Qty	UOM	Rate	Tax	Amount	Origin
1	Daily Cover-PCS-Tons-Pet	100	35.89	Tons				KING
2	GONDOLA 16.10/TN-GONDOLA	100	35.89	Tons				KING
3	LOCT$8.76W/32TON MIN-LOC	100	35.89	Tons				KING

Total Tax
Total Ticket

203WM
Driver's Signature

BILL OF LADING/SCALE TICKET

WASTE MANAGEMENT

BOEING # V2413

Generators Name & Address:
BOEING CO. - NORTH BOEING FIELD
7500 E. MARGINAL WAY S.
SEATTLE, WA. 98108

Billing: BOEING CO.
Contact Person: MARY JO DONNELLY
Contact Number: (206) 662-2534
Fax Number: (425) 294-9263

Acknowledgement of Loading

Jennifer Parsons
Name (Please Print)

Jennifer Parsons
Signature

BOEING - NORTH FIELD
Company

8/2/11
Date

Deliver To:

ALASKA RELOAD & RECYCLING FACILITY
70 SOUTH ALASKA STREET
SEATTLE, WASHINGTON 98134
TELEPHONE #: (206) 763-5025
MONDAY-FRIDAY 7:00AM-4:00PM

Disposal Facility:

COLUMBIA RIDGE LANDFILL AND
RECYCLING FACILITY
18177 CEDAR SPRINGS LANE
ARLINGTON, OREGON 97812
TELEPHONE: (541) 454-2030

Transporter Name: (SELF HAUL)
Harlow

Truck #: H29T

Waste Profile # 102596WA

Waste Type: ADC

Expiration Date: 01/07/12

Jim Bright
Driver's Name (Please Print)

NBF Stormline Reroute
Stockpile 2 & 5

SIGNATURE

Remarks: 3 DT/SELF HAUL (TURNS) 8/2/11 THRU 8/4/11

WASTE MANAGEMENT

Alaska Street
70 S Alaska Street
Seattle, WA, 98134

Original
Ticket# 31567

Ph: 206 763 5025

Customer Name BOEING BOEING
Ticket Date 08/03/2011
Payment Type Credit Account
Manual Ticket#
Route AK
Hauling Ticket#
Destination
PO# 102596WA

Carrier SELF HAULER *
Vehicle# H29T
Volume
Container
Driver JIM BRIGHT
Check#
Billing# 0000013
Grid

	Time	Scale	Operator	Inbound		
In	08/03/2011 10:18:06	SCALE 1	lmercer		Gross	105420 lb*
Out	08/03/2011 10:18:06		lmercer		Tare	41900 lb*
					Net	63520 lb
			* Manual Weight		Tons	31.76

Comments Harlow (V2413) Replaces voided# 31525

	Product	LD%	Qty	UOM	Rate	Tax	Amount	Origin
1	Daily Cover-PCS-Tons-Pet	100	31.76	Tons				KING
2	GONDOLA 16.10/TN-GONDOLA	100	31.76	Tons				KING

Total Tax
Total Ticket

203WM
Driver's Signature

WASTE MANAGEMENT

Alaska Street
70 S Alaska Street
Seattle, WA, 98134

Reprint
Ticket# 31525

Ph: 206 763 5025

Customer Name BOEING BOEING
Ticket Date 08/03/2011
Payment Type Credit Account
Manual Ticket#
Route AK
Hauling Ticket#
Destination
PO# 102596WA

Carrier SELF HAULER *
Vehicle# H29S
Volume
Container
Driver JIM BRIGHT
Check#
Billing# 0000013
Grid

	Time	Scale	Operator	Inbound		
In	08/03/2011 10:18:06	SCALE 1	lmercer		Gross	105420 lb
Out	08/03/2011 10:18:06		lmercer		Tare	41900 lb
					Net	63520 lb
					Tons	31.76

Comments HARLOW - LM (V2413)

	Product	LD%	Qty	UOM	Rate	Tax	Amount	Origin
1	Daily Cover-PCS-Tons-Pet	100	31.76	Tons				KING
2	GONDOLA 16.10/TN-GONDOLA	100	31.76	Tons				
3	LOCT$8.76W/32TON MIN-LOC	100	31.76	Tons				

Total Tax
Total Ticket

Driver's Signature

203

BILL OF LADING/SCALE TICKET

WASTE MANAGEMENT

BOEING # V2413

Generators Name & Address:
BOEING CO. - NORTH BOEING FIELD
7500 E. MARGINAL WAY S.
SEATTLE, WA. 98108

Billing: BOEING CO.
Contact Person: MARY JO DONNELLY
Contact Number: (206) 662-2534
Fax Number: (425) 294-9263

Acknowledgement of Loading

Jennifer Parsons
Name (Please Print)

Jennifer Parsons
Signature

BOEING - NORTH FIELD
Company

8/2/11
Date

Deliver To:

ALASKA RELOAD & RECYCLING FACILITY
70 SOUTH ALASKA STREET
SEATTLE, WASHINGTON 98134
TELEPHONE #: (206) 763-5025
MONDAY-FRIDAY 7:00AM-4:00PM

Disposal Facility:

COLUMBIA RIDGE LANDFILL AND
RECYCLING FACILITY
18177 CEDAR SPRINGS LANE
ARLINGTON, OREGON 97812
TELEPHONE: (541) 454-2030

Transporter Name: (SELF HAUL)

Harlow

Truck #: H29T

Waste Profile # 102596WA

Waste Type: ADC

Expiration Date: 01/07/12

Jim Bright
Driver's Name (Please Print)

NBF Stormline Reroute
Stockpile 2 & 5

SIGNATURE

Remarks: 3 DT/SELF HAUL (TURNS) 8/2/11 THRU 8/4/11

WASTE MANAGEMENT

Alaska Street
70 S Alaska Street
Seattle, WA, 98134

Original
Ticket# 31568

Ph: 206 763 5025

Customer Name BOEING BOEING
Ticket Date 08/03/2011
Payment Type Credit Account
Manual Ticket#
Route AK
Hauling Ticket#
Destination
PO# 102596WA

Carrier SELF HAULER *
Vehicle# H295
Volume
Container
Driver JIM BRIGHT
Check#
Billing# 0000013
Grid

	Time	Scale	Operator	Inbound		
In	08/03/2011 11:20:09	SCALE 1	lmercer		Gross	109780 lb*
Out	08/03/2011 11:20:09		lmercer		Tare	41860 lb*
					Net	67920 lb
			* Manual Weight		Tons	33.96

Comments HARLOW - LM (V2413) REPLACES VOIDED # 31531

	Product	LD%	Qty	UOM	Rate	Tax	Amount	Origin
1	Daily Cover-PCS-Tons-Pet	100	33.96	Tons				KING
2	GONDOLA 16.10/TN-GONDOLA	100	33.96	Tons				KING

Total Tax
Total Ticket

203WM
Driver's Signature

WASTE MANAGEMENT

Alaska Street
70 S Alaska Street
Seattle, WA, 98134

Original
Ticket# 31531

Ph: 206 763 5025

Customer Name BOEING BOEING
Ticket Date 08/03/2011
Payment Type Credit Account
Manual Ticket#
Route
Hauling Ticket#
Destination
PO# 102596WA

Carrier SELF HAULER *
Vehicle# H29S
Container
Driver
Check#
Billing# 0000013
Grid

Volume

	Time	Scale	Operator
In	08/03/2011 11:20:09	SCALE 1	lmercer
Out	08/03/2011 11:37:15	SCALE 1	lmercer

Inbound

Gross	109780 lb
Tare	41860 lb
Net	67920 lb
Tons	33.96

Comments HARLOW V2413 /BE

	Product	LD%	Qty	UOM	Rate	Tax	Amount	Origin
1	Daily Cover-PCS-Tons-Pet	100	33.96	Tons				KING
2	GONDOLA 16.10/TN-GONDOLA	100	33.96	Tons				KING
3	LOCT$8.76W/32TON MIN-LOC	100	33.96	Tons				KING

Total Tax
Total Ticket

Driver's Signature

BILL OF LADING/SCALE TICKET

WASTE MANAGEMENT

BOEING # V2413

Generators Name & Address:
BOEING CO. - NORTH BOEING FIELD
7500 E. MARGINAL WAY S.
SEATTLE, WA. 98108

Billing: BOEING CO.
Contact Person: MARY JO DONNELLY
Contact Number: (206) 662-2534
Fax Number: (425) 294-9263

Acknowledgement of Loading

Jennifer Parsons
Name (Please Print)

Jennifer Parsons
Signature

BOEING - NORTH FIELD
Company

8/2/11
Date

Deliver To:

ALASKA RELOAD & RECYCLING FACILITY
70 SOUTH ALASKA STREET
SEATTLE, WASHINGTON 98134
TELEPHONE #: (206) 763-5025
MONDAY-FRIDAY 7:00AM-4:00PM

Disposal Facility:

COLUMBIA RIDGE LANDFILL AND
RECYCLING FACILITY
18177 CEDAR SPRINGS LANE
ARLINGTON, OREGON 97812
TELEPHONE: (541) 454-2030

Transporter Name: (SELF HAUL)

Hartlow

Truck #: H29T

Waste Profile # 102596WA

Waste Type: ADC

Expiration Date: 01/07/12

Jim Brigl
Driver's Name (Please Print)

NBF Stormline Reroute
Stockpile 2 & 5

SIGNATURE

Remarks: 3 DT/SELF HAUL (TURNS) 8/2/11 THRU 8/4/11

WASTE MANAGEMENT

Alaska Street
70 S Alaska Street
Seattle, WA, 98134

Original
Ticket# 31569

Ph: 206 763 5025

Customer Name BOEING BOEING
Ticket Date 08/03/2011
Payment Type Credit Account
Manual Ticket#
Route AK
Hauling Ticket#
Destination
PO# 102596WA

Carrier SELF HAULER *
Vehicle# H29T
Volume
Container
Driver JIM BRIGHT
Check#
Billing# 0000013
Grid

	Time	Scale	Operator	Inbound		
In	08/03/2011 12:30:23	SCALE 1	lmercer		Gross	98780 lb*
Out	08/03/2011 12:30:23		lmercer		Tare	41900 lb*
					Net	56880 lb
			* Manual Weight		Tons	28.44

Comments HARLOW - LM (V2413) REPLACES VOIDED # 31539

	Product	LD%	Qty	UOM	Rate	Tax	Amount	Origin
1	Daily Cover-PCS-Tons-Pet	100	28.44	Tons				KING
2	GONDOLA 16.10/TN-GONDOLA	100	28.44	Tons				KING

Total Tax
Total Ticket

203WM

Driver's Signature

WASTE MANAGEMENT

Alaska Street
70 S Alaska Street
Seattle, WA, 98134

Original
Ticket# 31539

Ph: 206 763 5025

Customer Name BOEING BOEING
Ticket Date 08/03/2011
Payment Type Credit Account
Manual Ticket#
Route AK
Hauling Ticket#
Destination
PO# 102596WA

Carrier SELF HAULER *
Vehicle# H29T
Volume
Container
Driver JIM BRIGHT
Check#
Billing# 0000013
Grid

	Time	Scale	Operator	Inbound		
In	08/03/2011 12:30:23	SCALE 1	lmercer		Gross	98780 lb
Out	08/03/2011 12:30:23		lmercer		Tare	41900 lb
					Net	56880 lb
					Tons	28.44

Comments HARLOW - LM (V2413) 102596WA

	Product	LD%	Qty	UOM	Rate	Tax	Amount	Origin
1	Daily Cover-PCS-Tons-Pet	100	28.44	Tons				KING
2	GONDOLA 16.10/TN-GONDOLA	100	28.44	Tons				
3	LOCT$8.76W/32TON MIN-LOC	100	28.44	Tons				

Total Tax
Total Ticket

203WM Driver's Signature

BILL OF LADING/SCALE TICKET

WASTE MANAGEMENT

BOEING # V2413

Generators Name & Address:
BOEING CO. - NORTH BOEING FIELD
7500 E. MARGINAL WAY S.
SEATTLE, WA. 98108

Billing: BOEING CO.
Contact Person: MARY JO DONNELLY
Contact Number: (206) 662-2534
Fax Number: (425) 294-9263

Acknowledgement of Loading

Jennifer Parsons
Name (Please Print)

Jennifer Parsons
Signature

BOEING - NORTH FIELD
Company

8/2/11
Date

Deliver To:

ALASKA RELOAD & RECYCLING FACILITY
70 SOUTH ALASKA STREET
SEATTLE, WASHINGTON 98134
TELEPHONE #: (206) 763-5025
MONDAY-FRIDAY 7:00AM-4:00PM

Disposal Facility:

COLUMBIA RIDGE LANDFILL AND
RECYCLING FACILITY
18177 CEDAR SPRINGS LANE
ARLINGTON, OREGON 97812
TELEPHONE: (541) 454-2030

Transporter Name: (SELF HAUL)
Marlow

Truck #: 429T

Waste Profile # 102596WA

Waste Type: ADC

Expiration Date: 01/07/12

Jim Bright
Driver's Name (Please Print)

SIGNATURE

NBF Storm Line Reroute
Stockpiles 2 & 5

Remarks: 3 DT/SELF HAUL (TURNS) 8/2/11 THRU 8/4/11

WASTE MANAGEMENT

Alaska Street
70 S Alaska Street
Seattle, WA, 98134

Original
Ticket# 31570

Ph: 206 763 5025

Customer Name BOEING BOEING
Ticket Date 08/03/2011
Payment Type Credit Account
Manual Ticket#
Route AK
Hauling Ticket#
Destination
PO# 102596WA

Carrier SELF HAULER *
Vehicle# H32T
Volume
Container
Driver RJ
Check#
Billing# 0000013
Grid

	Time	Scale	Operator	Inbound		
In	08/03/2011 15:18:41	SCALE 1	lmercer		Gross	109140 lb*
Out	08/03/2011 15:18:41		lmercer		Tare	41740 lb*
					Net	67400 lb
			* Manual Weight		Tons	33.70

Comments HARLOW - LM (V2413)

	Product	LD%	Qty	UOM	Rate	Tax	Amount	Origin
1	Daily Cover-PCS-Tons-Pet	100	33.70	Tons				KING
2	GONDOLA 16.10/TN-GONDOLA	100	33.70	Tons				KING

Total Tax
Total Ticket

203WM Driver's Signature

BILL OF LADING/SCALE TICKET

WASTE MANAGEMENT

BOEING # V2413

Generators Name & Address:
BOEING CO. - NORTH BOEING FIELD
7500 E. MARGINAL WAY S.
SEATTLE, WA. 98108

Billing: BOEING CO.
Contact Person: MARY JO DONNELLY
Contact Number: (206) 662-2534
Fax Number: (425) 294-9263

Acknowledgement of Loading

Jennifer Parsons
Name (Please Print)

Jennifer Parsons
Signature

BOEING - NORTH FIELD
Company

8/2/11
Date

Deliver To:

ALASKA RELOAD & RECYCLING FACILITY
70 SOUTH ALASKA STREET
SEATTLE, WASHINGTON 98134
TELEPHONE #: (206) 763-5025
MONDAY-FRIDAY 7:00AM-4:00PM

Disposal Facility:

COLUMBIA RIDGE LANDFILL AND
RECYCLING FACILITY
18177 CEDAR SPRINGS LANE
ARLINGTON, OREGON 97812
TELEPHONE: (541) 454-2030

Transporter Name: (SELF HAUL)
Marlow

Truck #: 432 T

Waste Profile # 102596WA

Waste Type: ADC

Expiration Date: 01/07/12

Robert Johnstone
Driver's Name (Please Print)

SIGNATURE

NBF Stormline Reroute
Stockpiles 2 & 5

Remarks: DT/SELF HAUL (TURNS) 8/2/11 THRU 8/4/11

WASTE MANAGEMENT

Alaska Street
70 S Alaska Street
Seattle, WA, 98134

Original
Ticket# 31573

Ph: 206 763 5025

Customer Name BOEING BOEING
Ticket Date 08/03/2011
Payment Type Credit Account
Manual Ticket#
Route AK
Hauling Ticket#
Destination
PO# 102596WA

Carrier SELF HAULER *
Vehicle# H29T
Container
Driver JIM BRIGHT
Check#
Billing# 0000013
Grid

Volume

	Time	Scale	Operator	Inbound		
In	08/03/2011 13:46:08	SCALE 1	lmercer		Gross	109740 lb*
Out	08/03/2011 13:46:08		lmercer		Tare	41900 lb*
					Net	67840 lb
			* Manual Weight		Tons	33.92

Comments HARLOW - LM (V2413) REPLACES VOIDED # 31554

	Product	LD%	Qty	UOM	Rate	Tax	Amount	Origin
1	Daily Cover-PCS-Tons-Pet	100	33.92	Tons				KING
2	GONDOLA 16.10/TN-GONDOLA	100	33.92	Tons				

Total Tax
Total Ticket

203WM
Driver's Signature

WASTE MANAGEMENT

Alaska Street
70 S Alaska Street
Seattle, WA, 98134

Original
Ticket# 31554

Ph: 206 763 5025

Customer Name BOEING BOEING
Ticket Date 08/03/2011
Payment Type Credit Account
Manual Ticket#
Route AK
Hauling Ticket#
Destination
PO# 102596WA

Carrier SELF HAULER *
Vehicle# H29T
Volume
Container
Driver JIM BRIGHT
Check#
Billing# 0000013
Grid

	Time	Scale	Operator	Inbound		
In	08/03/2011 13:46:08	SCALE 1	lmercer		Gross	109740 lb
Out	08/03/2011 13:46:08		lmercer		Tare	41900 lb
					Net	67840 lb
					Tons	33.92

Comments HARLOW - LM (V2413)

	Product	LD%	Qty	UOM	Rate	Tax	Amount	Origin
1	Daily Cover-PCS-Tons-Pet	100	33.92	Tons				KING
2	GONDOLA 16.10/TN-GONDOLA	100	33.92	Tons				
3	LOCT$8.76W/32TON MIN-LOC	100	33.92	Tons				

Total Tax
Total Ticket

Driver's Signature

203WM

BILL OF LADING/SCALE TICKET

WASTE MANAGEMENT

BOEING # V2413

Generators Name & Address:
BOEING CO. - NORTH BOEING FIELD
7500 E. MARGINAL WAY S.
SEATTLE, WA. 98108

Billing: BOEING CO.
Contact Person: MARY JO DONNELLY
Contact Number: (206) 662-2534
Fax Number: (425) 294-9263

Acknowledgement of Loading

Jennifer Parsons
Name (Please Print)

Jennifer Parsons
Signature

BOEING - NORTH FIELD
Company

8/2/11
Date

Deliver To:

ALASKA RELOAD & RECYCLING FACILITY
70 SOUTH ALASKA STREET
SEATTLE, WASHINGTON 98134
TELEPHONE #: (206) 763-5025
MONDAY-FRIDAY 7:00AM-4:00PM

Disposal Facility:

COLUMBIA RIDGE LANDFILL AND
RECYCLING FACILITY
18177 CEDAR SPRINGS LANE
ARLINGTON, OREGON 97812
TELEPHONE: (541) 454-2030

Transporter Name: (SELF HAUL)

Truck #: H29T

Waste Profile # 102596WA

Waste Type: ADC

Expiration Date: 01/07/12

Driver's Name (Please Print) Jim Bright

NBF Stormline Reroute
Stockpile 2 & 5

SIGNATURE

Remarks: 3 DT/SELF HAUL (TURNS) 8/2/11 THRU 8/4/11

WASTE MANAGEMENT

Alaska Street
70 S Alaska Street
Seattle, WA, 98134

Original
Ticket# 31574

Ph: 206 763 5025

Customer Name BOEING BOEING
Ticket Date 08/03/2011
Payment Type Credit Account
Manual Ticket#
Route AK
Hauling Ticket#
Destination
PO# 102596WA

Carrier SELF HAULER *
Vehicle# H33
Volume
Container
Driver RANDY HUGH
Check#
Billing# 0000013
Grid

	Time	Scale	Operator	Inbound		
In	08/03/2011 15:27:09	SCALE 1	lmercer		Gross	100940 lb
Out	08/03/2011 15:27:09		lmercer		Tare	42100 lb
					Net	58840 lb
					Tons	29.42

Comments HARLOW - LM (V2413)

	Product	LD%	Qty	UOM	Rate	Tax	Amount	Origin
1	Daily Cover-PCS-Tons-Pet	100	29.42	Tons				KING
2	GONDOLA 16.10/TN-GONDOLA	100	29.42	Tons				KING

Total Tax
Total Ticket

203WM
Driver's Signature Randy

BILL OF LADING/SCALE TICKET

WASTE MANAGEMENT

BOEING # V2413

Generators Name & Address:
BOEING CO. - NORTH BOEING FIELD
7500 E. MARGINAL WAY S.
SEATTLE, WA. 98108

Billing: BOEING CO.
Contact Person: MARY JO DONNELLY
Contact Number: (206) 662-2534
Fax Number: (425) 294-9263

Acknowledgement of Loading

Jennifer Parsons
Name (Please Print)

Jennifer Parsons
Signature

BOEING - NORTH FIELD
Company

8/ /11
Date

Deliver To:

ALASKA RELOAD & RECYCLING FACILITY
70 SOUTH ALASKA STREET
SEATTLE, WASHINGTON 98134
TELEPHONE #: (206) 763-5025
MONDAY-FRIDAY 7:00AM-4:00PM

Disposal Facility:

COLUMBIA RIDGE LANDFILL AND
RECYCLING FACILITY
18177 CEDAR SPRINGS LANE
ARLINGTON, OREGON 97812
TELEPHONE: (541) 454-2030

Transporter Name: (SELF HAUL)
Harlow

Truck #: H33

Waste Profile # 102596WA

Waste Type: ADC

Expiration Date: 01/07/12

Randy Hirsch
Driver's Name (Please Print)

Randy Hirsch
SIGNATURE

NBF Stormline Reroute
Stockpiles 2 & 5

Remarks: DT/SELF HAUL (TUPMS) 8/2/11 THRU 8/4/11

WASTE MANAGEMENT

Alaska Street
70 S Alaska Street
Seattle, WA, 98134

Original
Ticket# 31575

Ph: 206 763 5025

Customer Name BOEING BOEING
Ticket Date 08/03/2011
Payment Type Credit Account
Manual Ticket#
Route AK
Hauling Ticket#
Destination
PO# 102596WA

Carrier SELF HAULER *
Vehicle# H32T
Volume
Container
Driver RJ
Check#
Billing# 0000013
Grid

	Time	Scale	Operator	Inbound		
In	08/03/2011 14:12:00	SCALE 1	lmercer		Gross	100380 lb*
Out	08/03/2011 14:32:26		lmercer		Tare	41740 lb*
					Net	58640 lb
			* Manual Weight		Tons	29.32

Comments HARLOW - LM (V2413) REPLACES VOIDED # 31557

	Product	LD%	Qty	UOM	Rate	Tax	Amount	Origin
1	Daily Cover-PCS-Tons-Pet	100	29.32	Tons				KING
2	GONDOLA 16.10/TN-GONDOLA	100	29.32	Tons				

Total Tax
Total Ticket

203WM

Driver's Signature

WASTE MANAGEMENT

Alaska Street
70 S Alaska Street
Seattle, WA, 98134

Original
Ticket# 31557

Ph: 206 763 5025

Customer Name BOEING BOEING
Ticket Date 08/03/2011
Payment Type Credit Account
Manual Ticket#
Route AK
Hauling Ticket#
Destination
PO# 102596WA

Carrier SELF HAULER *
Vehicle# H32T
Volume
Container
Driver ROBERT JOHNSTAD
Check#
Billing# 0000013
Grid

	Time	Scale	Operator	Inbound		
In	08/03/2011 14:12:00	SCALE 1	lmercer		Gross	100380 lb
Out	08/03/2011 14:32:26	SCALE 1	lmercer		Tare	41740 lb
					Net	58640 lb
					Tons	29.32

Comments HARLOW - LM (V2413)

	Product	LD%	Qty	UOM	Rate	Tax	Amount	Origin
1	Daily Cover-PCS-Tons-Pet	100	29.32	Tons				KING
2	GONDOLA 16.10/TN-GONDOLA	100	29.32	Tons				KING
3	LOCT$8.76W/32TON MIN-LOC	100	29.32	Tons				KING

Total Tax
Total Ticket

203WM Driver's Signature

BILL OF LADING/SCALE TICKET

WASTE MANAGEMENT

BOEING # V2413

Generators Name & Address:
BOEING CO. - NORTH BOEING FIELD
7500 E. MARGINAL WAY S.
SEATTLE, WA. 98108

Billing: BOEING CO.
Contact Person: MARY JO DONNELLY
Contact Number: (206) 662-2534
Fax Number: (425) 294-9263

Acknowledgement of Loading

[illegible] Parsons
Name (Please Print)

[illegible]
Signature

BOEING - NORTH FIELD
Company

8/2/11
Date

Deliver To:

ALASKA RELOAD & RECYCLING FACILITY
70 SOUTH ALASKA STREET
SEATTLE, WASHINGTON 98134
TELEPHONE #: (206) 763-5025
MONDAY-FRIDAY 7:00AM-4:00PM

Disposal Facility:

COLUMBIA RIDGE LANDFILL AND
RECYCLING FACILITY
18177 CEDAR SPRINGS LANE
ARLINGTON, OREGON 97812
TELEPHONE: (541) 454-2030

Transporter Name: (SELF HAUL)

Truck #: 1132 T

Waste Profile # 102596WA

Waste Type: ADC

Expiration Date: 01/07/12

[illegible]
Driver's Name (Please Print)

[illegible]
SIGNATURE

NAF Sumline Cement
Stockpile 2 T

Remarks: DT/SELF HAUL (TURNS) 8/2/11 THRU 8/4/11

WASTE MANAGEMENT

Alaska Street
70 S Alaska Street
Seattle, WA, 98134

Original
Ticket# 31576

Ph: 206 763 5025

Customer Name BOEING BOEING
Ticket Date 08/03/2011
Payment Type Credit Account
Manual Ticket#
Route AK
Hauling Ticket#
Destination
PO# 102596WA

Carrier SELF HAULER *
Vehicle# H33
Volume
Container
Driver RANDY HUGH
Check#
Billing# 0000013
Grid

	Time	Scale	Operator	Inbound		
In	08/03/2011 14:22:41	SCALE 1	lmercer		Gross	102180 lb*
Out	08/03/2011 14:22:41		lmercer		Tare	42100 lb*
					Net	60080 lb
			* Manual Weight		Tons	30.04

Comments HARLOW - LM (V2413) REPLACES VOIDED # 31558

	Product	LD%	Qty	UOM	Rate	Tax	Amount	Origin
1	Daily Cover-PCS-Tons-Pet	100	30.04	Tons				KING
2	GONDOLA 16.10/TN-GONDOLA	100	30.04	Tons				KING

Total Tax
Total Ticket

203WM
Driver's Signature

WASTE MANAGEMENT

Alaska Street
70 S Alaska Street
Seattle, WA, 98134

Original
Ticket# 31558

Ph: 206 763 5025

Customer Name BOEING BOEING
Ticket Date 08/03/2011
Payment Type Credit Account
Manual Ticket#
Route AK
Hauling Ticket#
Destination
PO# 102596WA

Carrier SELF HAULER *
Vehicle# H33 Volume
Container
Driver RANDY HUGH
Check#
Billing# 0000013
Grid

	Time	Scale	Operator	Inbound		
In	08/03/2011 14:22:41	SCALE 1	lmercer		Gross	102180 lb
Out	08/03/2011 14:22:41		lmercer		Tare	42100 lb
					Net	60080 lb
					Tons	30.04

Comments HARLOW - LM (V2413)

	Product	LD%	Qty	UOM	Rate	Tax	Amount	Origin
1	Daily Cover-PCS-Tons-Pet	100	30.04	Tons				KING
2	GONDOLA 16.10/TN-GONDOLA	100	30.04	Tons				
3	LOCT$8.76W/32TON MIN-LOC	100	30.04	Tons				

Total Tax
Total Ticket

Driver's Signature

203WM

BILL OF LADING/SCALE TICKET

WASTE MANAGEMENT

BOEING # V2413

Generators Name & Address:
BOEING CO. - NORTH BOEING FIELD
7500 E. MARGINAL WAY S.
SEATTLE, WA. 98108

Billing: BOEING CO.
Contact Person: MARY JO DONNELLY
Contact Number: (206) 662-2534
Fax Number: (425) 294-9263

Acknowledgement of Loading

Jennifer Parsons
Name (Please Print)

Jennifer Parsons
Signature

BOEING - NORTH FIELD
Company

8/2/11
Date

Deliver To:

ALASKA RELOAD & RECYCLING FACILITY
70 SOUTH ALASKA STREET
SEATTLE, WASHINGTON 98134
TELEPHONE #: (206) 763-5025
MONDAY-FRIDAY 7:00AM-4:00PM

Disposal Facility:

COLUMBIA RIDGE LANDFILL AND
RECYCLING FACILITY
18177 CEDAR SPRINGS LANE
ARLINGTON, OREGON 97812
TELEPHONE: (541) 454-2030

Transporter Name: (SELF HAUL)
Harlow

Truck #: H33

Waste Profile # 102596WA

Waste Type: ADC

Expiration Date: 01/07/12

Randy Hugh
Drivers Name (Please Print)

Randy Hugh
SIGNATURE

NBF Stormline Concrete
Stockpiles 2 & 5

Remarks: DT/SELF HAUL (TURNS) 8/2/11 THRU 8/4/11

WASTE MANAGEMENT

Alaska Street
70 S Alaska Street
Seattle, WA, 98134

Original
Ticket# 31577

Ph: 206 763 5025

Customer Name BOEING BOEING
Ticket Date 08/03/2011
Payment Type Credit Account
Manual Ticket#
Route AK
Hauling Ticket#
Destination
PO# 102596WA

Carrier SELF HAULER *
Vehicle# H29T
Volume
Container
Driver JIM BRIGHT
Check#
Billing# 0000013
Grid

	Time	Scale	Operator	Inbound		
In	08/03/2011 14:43:34	SCALE 1	lmercer		Gross	112440 lb*
Out	08/03/2011 14:43:34		lmercer		Tare	41900 lb*
					Net	70540 lb
			* Manual Weight		Tons	35.27

Comments HARLOW - LM (V2413) REPLACES VOIDED # 31561

	Product	LD%	Qty	UOM	Rate	Tax	Amount	Origin
1	Daily Cover-PCS-Tons-Pet	100	35.27	Tons				KING
2	GONDOLA 16.10/TN-GONDOLA	100	35.27	Tons				

Total Tax
Total Ticket

203WM
Driver's Signature

WASTE MANAGEMENT

Alaska Street
70 S Alaska Street
Seattle, WA, 98134

Original
Ticket# 31561

Ph: 206 763 5025

Customer Name BOEING BOEING
Ticket Date 08/03/2011
Payment Type Credit Account
Manual Ticket#
Route AK
Hauling Ticket#
Destination
PO# 102596WA

Carrier SELF HAULER *
Vehicle# H29T
Volume
Container
Driver JIM BRIGHT
Check#
Billing# 0000013
Grid

	Time	Scale	Operator	Inbound		
In	08/03/2011 14:43:34	SCALE 1	lmercer		Gross	112440 lb
Out	08/03/2011 14:43:34		lmercer		Tare	41900 lb
					Net	70540 lb
					Tons	35.27

Comments HARLOW - LM (V2413)

	Product	LD%	Qty	UOM	Rate	Tax	Amount	Origin
1	Daily Cover-PCS-Tons-Pet	100	35.27	Tons				KING
2	GONDOLA 16.10/TN-GONDOLA	100	35.27	Tons				
3	LOCT$8.76W/32TON MIN-LOC	100	35.27	Tons				

Total Tax
Total Ticket

Driver's Signature

203WM

BILL OF LADING/SCALE TICKET

WASTE MANAGEMENT

BOEING # V2413

Generators Name & Address:
BOEING CO. - NORTH BOEING FIELD
7500 E. MARGINAL WAY S.
SEATTLE, WA. 98108

Billing: BOEING CO.
Contact Person: MARY JO DONNELLY
Contact Number: (206) 662-2534
Fax Number: (425) 294-9263

Acknowledgement of Loading

Jennifer Parsons
Name (Please Print)

Jennifer Parsons
Signature

BOEING - NORTH FIELD
Company

8/2/11
Date

Deliver To:

ALASKA RELOAD & RECYCLING FACILITY
70 SOUTH ALASKA STREET
SEATTLE, WASHINGTON 98134
TELEPHONE #: (206) 763-5025
MONDAY-FRIDAY 7:00AM-4:00PM

Disposal Facility:

COLUMBIA RIDGE LANDFILL AND
RECYCLING FACILITY
18177 CEDAR SPRINGS LANE
ARLINGTON, OREGON 97812
TELEPHONE: (541) 454-2030

Transporter Name: (SELF HAUL)

Truck #: H29T

Waste Profile # 102596WA

Waste Type: ADC

Expiration Date: 01/07/12

Jim Bright
Driver's Name (Please Print)

NBF Stormline Reroute
Stockpile 2&5

SIGNATURE

Remarks: 3 DT/SELF HAUL (TURNS) 8/2/11 THRU 8/4/11

WASTE MANAGEMENT

Alaska Street
70 S Alaska Street
Seattle, WA, 98134

Original
Ticket# 31578

Ph: 206 763 5025

Customer Name BOEING BOEING
Ticket Date 08/03/2011
Payment Type Credit Account
Manual Ticket#
Route AK
Hauling Ticket#
Destination
PO# 102596WA

Carrier SELF HAULER *
Vehicle# H29T
Volume
Container
Driver JIM BRIGHT
Check#
Billing# 0000013
Grid

	Time	Scale	Operator	Inbound		
In	08/03/2011 07:56:33	SCALE 1	lmercer		Gross	99540 lb*
Out	08/03/2011 07:56:33		lmercer		Tare	41900 lb*
					Net	57640 lb
			* Manual Weight		Tons	28.82

Comments HARLOW (V2413 - LM REPLACES VOIDED # 31565 431509

2m

	Product	LD%	Qty	UOM	Rate	Tax	Amount	Origin
1	Daily Cover-PCS-Tons-Pet	100	28.82	Tons				KING
2	GONDOLA 16.10/TN-GONDOLA	100	28.82	Tons				

Total Tax
Total Ticket

203WM
Driver's Signature

WASTE MANAGEMENT

Alaska Street
70 S Alaska Street
Seattle, WA, 98134

Original
Ticket# 31565

Ph: 206 763 5025

Customer Name BOEING BOEING
Ticket Date 08/03/2011
Payment Type Credit Account
Manual Ticket#
Route AK
Hauling Ticket#
Destination
PO# 102596WA

Carrier SELF HAULER *
Vehicle# H29T
Container
Driver JIM BRIGHT
Check#
Billing# 0000013
Grid

Volume

	Time	Scale	Operator	Inbound		
In	08/03/2011 19:56:33	SCALE 1	lmercer		Gross	99540 lb*
Out	08/03/2011 20:19:34		lmercer		Tare	41900 lb*
					Net	57640 lb
			* Manual Weight		Tons	28.82

Comments HARLOW - LM (V2413) REPLACES VOIDED # 31509

	Product	LD%	Qty	UOM	Rate	Tax	Amount	Origin
1	Daily Cover-PCS-Tons-Pet	100	28.82	Tons				KING
2	GONDOLA 16.10/TN-GONDOLA	100	28.82	Tons				

Total Tax
Total Ticket

203WM

Driver's Signature

WASTE MANAGEMENT

Alaska Street
70 S Alaska Street
Seattle, WA, 98134

Original
Ticket# 31509

Ph: 206 763 5025

Customer Name BOEING BOEING
Ticket Date 08/03/2011
Payment Type Credit Account
Manual Ticket#
Route AK
Hauling Ticket#
Destination
PO# 102596WA

Carrier SELF HAULER *
Vehicle# H29T
Volume
Container
Driver JIM BRIGHT
Check#
Billing# 0000013
Grid

	Time	Scale	Operator	Inbound		
In	08/03/2011 07:56:33	SCALE 1	lmercer		Gross	99540 lb
Out	08/03/2011 08:19:34	SCALE 1	lmercer		Tare	41900 lb
					Net	57640 lb
					Tons	28.82

Comments HARLOW - LM (V2413)

	Product	LD%	Qty	UOM	Rate	Tax	Amount	Origin
1	Daily Cover-PCS-Tons-Pet	100	28.82	Tons				KING
2	GONDOLA 16.10/TN-GONDOLA	100	28.82	Tons				KING
3	LOCT$8.76W/32TON MIN-LOC	100	28.82	Tons				KING

Total Tax
Total Ticket

203 Driver's Signature

BILL OF LADING/SCALE TICKET

WASTE MANAGEMENT

BOEING # V2413

Generators Name & Address:
BOEING CO. - NORTH BOEING FIELD
7500 E. MARGINAL WAY S.
SEATTLE, WA. 98108

Billing: BOEING CO.
Contact Person: MARY JO DONNELLY
Contact Number: (206) 662-2534
Fax Number: (425) 294-7263

Acknowledgement of Loading

Jennifer Parsons
Name (Please Print)

Jennifer Parsons
Signature

BOEING - NORTH FIELD
Company

8/2/11
Date

Deliver To:

ALASKA RELOAD & RECYCLING FACILITY
70 SOUTH ALASKA STREET
SEATTLE, WASHINGTON 98134
TELEPHONE #: (206) 763-5025
MONDAY-FRIDAY 7:00AM-4:00PM

Disposal Facility:

COLUMBIA RIDGE LANDFILL AND
RECYCLING FACILITY
18177 CEDAR SPRINGS LANE
ARLINGTON, OREGON 97812
TELEPHONE: (541) 454-2030

Transporter Name: (SELF HAUL)
Harlow

Truck #: H29T

Waste Profile # 1Ø2596WA

Waste Type: ADC

Expiration Date: Ø1/07/12

Jim Bright
Driver's Name (Please Print)

NBF Streamline Reroute
Stockpile 2 & 5

SIGNATURE

Remarks: 3 DT/SELF HAUL (TUPMS) 8/2/11 THRU 8/4/11

WASTE MANAGEMENT

Alaska Street
70 S Alaska Street
Seattle, WA, 98134

Original
Ticket# 31584
Ph: 206 763 5025

Customer Name BOEING BOEING
Ticket Date 08/04/2011
Payment Type Credit Account
Manual Ticket#
Route AK
Hauling Ticket#
Destination
PO# 102596WA

Carrier SELF HAULER *
Vehicle# H32T
Volume
Container
Driver RJ
Check#
Billing# 0000013
Grid

	Time	Scale	Operator	Inbound		
In	08/04/2011 08:53:05	SCALE 1	lmercer		Gross	106100 lb
Out	08/04/2011 08:53:05		lmercer		Tare	41740 lb
					Net	64360 lb
					Tons	32.18

Comments HARLOW - LM (V2413)

	Product	LD%	Qty	UOM	Rate	Tax	Amount	Origin
1	Daily Cover-PCS-Tons-Pet	100	32.18	Tons				KING
2	GONDOLA 16.10/TN-GONDOLA	100	32.18	Tons				

Total Tax
Total Ticket

203WM
Driver's Signature

BILL OF LADING/SCALE TICKET

WASTE MANAGEMENT

BOEING # V2413

Generators Name & Address:
BOEING CO. - NORTH BOEING FIELD
7500 E. MARGINAL WAY S.
SEATTLE, WA. 98108

Billing: BOEING CO.
Contact Person: MARY JO DONNELLY
Contact Number: (206) 662-2534
Fax Number: (425) 294-9263

Acknowledgement of Loading

Jennifer Parsons
Name (Please Print)

Jennifer Parsons
Signature

BOEING - NORTH FIELD
Company

8/4/11
Date

Deliver To:

ALASKA RELOAD & RECYCLING FACILITY
70 SOUTH ALASKA STREET
SEATTLE, WASHINGTON 98134
TELEPHONE #: (206) 763-5025
MONDAY-FRIDAY 7:00AM-4:00PM

Disposal Facility:

COLUMBIA RIDGE LANDFILL AND
RECYCLING FACILITY
18177 CEDAR SPRINGS LANE
ARLINGTON, OREGON 97812
TELEPHONE: (541) 454-2030

Transporter Name: (SELF HAUL)
Harlow

Truck #: H32-T

Waste Profile # 102596WA

Waste Type: ADC

Expiration Date: 01/07/12

Robert Johnstad
Driver's Name (Please Print)

Robert Johnstad
SIGNATURE

NBF Stormline Reroute
Stockpiles 2 & 5

Remarks: DT/SELF HAUL (TURNS) 8/2/11 THRU 8/4/11

WASTE MANAGEMENT

Alaska Street
70 S Alaska Street
Seattle, WA, 98134

Original
Ticket# 31587

Ph: 206 763 5025

Customer Name BOEING BOEING
Ticket Date 08/04/2011
Payment Type Credit Account
Manual Ticket#
Route AK
Hauling Ticket#
Destination
PO# 102596WA

Carrier SELF HAULER *
Vehicle# H32T
Container
Driver RJ
Check#
Billing# 0000013
Grid

Volume

	Time	Scale	Operator	Inbound		
In	08/04/2011 09:52:59	SCALE 1	lmercer		Gross	109320 lb
Out	08/04/2011 09:52:59		lmercer		Tare	41740 lb
					Net	67580 lb
					Tons	33.79

Comments HARLOW - LM (V2413)

	Product	LD%	Qty	UOM	Rate	Tax	Amount	Origin
1	Daily Cover-PCS-Tons-Pet	100	33.79	Tons				KING
2	GONDOLA 16.10/TN-GONDOLA	100	33.79	Tons				

Total Tax
Total Ticket

203WM
Driver's Signature

BILL OF LADING/SCALE TICKET

WASTE MANAGEMENT

BOEING # V2413

Generators Name & Address:
BOEING CO. - NORTH BOEING FIELD
7500 E. MARGINAL WAY S.
SEATTLE, WA. 98108

Billing: BOEING CO.
Contact Person: MARY JO DONNELLY
Contact Number: (206) 662-2534
Fax Number: (425) 294-9263

Acknowledgement of Loading

Jennifer Parsons
Name (Please Print)

Jennifer Parsons
Signature

BOEING - NORTH FIELD
Company

8/4/11
Date

Deliver To:

ALASKA RELOAD & RECYCLING FACILITY
70 SOUTH ALASKA STREET
SEATTLE, WASHINGTON 98134
TELEPHONE #: (206) 763-5025
MONDAY-FRIDAY 7:00AM-4:00PM

Disposal Facility:

COLUMBIA RIDGE LANDFILL AND
RECYCLING FACILITY
18177 CEDAR SPRINGS LANE
ARLINGTON, OREGON 97812
TELEPHONE: (541) 454-2030

Transporter Name: (SELF HAUL)
Harlow

Truck #: H32-T

Waste Profile # 102596WA

Waste Type: ADC

Expiration Date: 01/07/12

Robert Johnstad
Driver's Name (Please Print)

Robert Johnstad
SIGNATURE

NBF Stormline Reroute
Stockpiles 2 & 5

Remarks: 3 DT/SELF HAUL (TURNS) 8/2/11 THRU 8/4/11

WASTE MANAGEMENT

Alaska Street
70 S Alaska Street
Seattle, WA, 98134

Original
Ticket# 31591

Ph: 206 763 5025

Customer Name BOEING BOEING
Ticket Date 08/04/2011
Payment Type Credit Account
Manual Ticket#
Route AK
Hauling Ticket#
Destination
PO# 102596WA

Carrier SELF HAULER *
Vehicle# H32T
Volume
Container
Driver RJ
Check#
Billing# 0000013
Grid

	Time	Scale	Operator	Inbound		
In	08/04/2011 10:50:18	SCALE 1	lmercer		Gross	115400 lb
Out	08/04/2011 10:50:18		lmercer		Tare	41740 lb
					Net	73660 lb
					Tons	36.83

Comments HARLOW - LM (V2413)

	Product	LD%	Qty	UOM	Rate	Tax	Amount	Origin
1	Daily Cover-PCS-Tons-Pet	100	36.83	Tons				KING
2	GONDOLA 16.10/TN-GONDOLA	100	36.83	Tons				

Total Tax
Total Ticket

203WM
Driver's Signature

BILL OF LADING/SCALE TICKET

WASTE MANAGEMENT

BOEING # V2413

Generators Name & Address:
BOEING CO. - NORTH BOEING FIELD
7500 E. MARGINAL WAY S.
SEATTLE, WA. 98108

Billing: BOEING CO.
Contact Person: MARY JO DONNELLY
Contact Number: (206) 662-2534
Fax Number: (425) 294-9263

Acknowledgement of Loading

Jennifer Parsons
Name (Please Print)

Jennifer Parsons
Signature

BOEING - NORTH FIELD
Company

8/4/11
Date

Deliver To:

ALASKA RELOAD & RECYCLING FACILITY
70 SOUTH ALASKA STREET
SEATTLE, WASHINGTON 98134
TELEPHONE #: (206) 763-5025
MONDAY-FRIDAY 7:00AM-4:00PM

Disposal Facility:

COLUMBIA RIDGE LANDFILL AND
RECYCLING FACILITY
18177 CEDAR SPRINGS LANE
ARLINGTON, OREGON 97812
TELEPHONE: (541) 454-2030

Transporter Name: (SELF HAUL)
Harlow

Truck #: H 327

Waste Profile # 102596WA

Waste Type: ADC

Expiration Date: 01/07/12

Robert Johnston
Driver's Name (Please Print)

Robert Johnston
SIGNATURE

NBF Stormline Project
Stockpiles 2 & 5

Remarks: 3 DT/SELF HAUL (TUPMS) 8/2/11 THRU 8/4/11

WASTE MANAGEMENT

Alaska Street
70 S Alaska Street
Seattle, WA, 98134

Original
Ticket# 31594

Ph: 206 763 5025

Customer Name	BOEING BOEING	Carrier	SELF HAULER *
Ticket Date	08/04/2011	Vehicle#	H327
Payment Type	Credit Account	Container	
Manual Ticket#		Driver	RJ
Route	AK	Check#	
Hauling Ticket#		Billing#	0000013
Destination		Grid	
PO#	102596WA		

Volume

	Time	Scale	Operator	Inbound		
In	08/04/2011 11:53:58	SCALE 1	lmercer		Gross	107040 lb
Out	08/04/2011 11:53:58		lmercer		Tare	41740 lb
					Net	65300 lb
					Tons	32.65

Comments HARLOW - LM (V2413)

	Product	LDX	Qty	UOM	Rate	Tax	Amount	Origin
1	Daily Cover-PCS-Tons-Pet	100	32.65	Tons				KING
2	GONDOLA 16.10/TN-GONDOLA	100	32.65	Tons				KING

Total Tax
Total Ticket

203WM
Driver's Signature

BILL OF LADING/SCALE TICKET

WASTE MANAGEMENT

BOEING # V2413

Generators Name & Address:
BOEING CO. - NORTH BOEING FIELD
7500 E. MARGINAL WAY S.
SEATTLE, WA. 98108

Billing: BOEING CO.
Contact Person: MARY JO DONNELLY
Contact Number: (206) 662-2534
Fax Number: (425) 294-9263

Acknowledgement of Loading

Jennifer Parsons
Name (Please Print)

Jennifer Parsons
Signature

BOEING - NORTH FIELD
Company

8/4/11
Date

Deliver To:

ALASKA RELOAD & RECYCLING FACILITY
70 SOUTH ALASKA STREET
SEATTLE, WASHINGTON 98134
TELEPHONE #: (206) 763-5025
MONDAY-FRIDAY 7:00AM-4:00PM

Disposal Facility:

COLUMBIA RIDGE LANDFILL AND
RECYCLING FACILITY
18177 CEDAR SPRINGS LANE
ARLINGTON, OREGON 97812
TELEPHONE: (541) 454-2030

Transporter Name: (SELF HAUL)
Harlow

Truck #: H 327

Waste Profile # 102596WA

Waste Type: ADC

Expiration Date: 01/07/12

Robert Johnston
Driver's Name (Please Print)

Robert Johnston
SIGNATURE

NBF Stormline Project
Stockpiles 2 & 5

Remarks: 3 DT/SELF HAUL (TURNS) 8/2/11 THRU 8/4/11

WASTE MANAGEMENT

Alaska Street
70 S Alaska Street
Seattle, WA, 98134

Original
Ticket# 31599

Ph: 206 763 5025

Customer Name BOEING BOEING
Ticket Date 08/04/2011
Payment Type Credit Account
Manual Ticket#
Route AK
Hauling Ticket#
Destination
PO# 102596WA

Carrier SELF HAULER *
Vehicle# H32T
Volume
Container
Driver RJ
Check#
Billing# 0000013
Grid

	Time	Scale	Operator	Inbound		
In	08/04/2011 13:19:31	SCALE 1	lmercer		Gross	109520 lb
Out	08/04/2011 13:19:31		lmercer		Tare	41740 lb
					Net	67780 lb
					Tons	33.89

Comments HARLOW - LM (V2413)

	Product	LD%	Qty	UOM	Rate	Tax	Amount	Origin
1	Daily Cover-PCS-Tons-Pet	100	33.89	Tons				KING
2	GONDOLA 16.10/TN-GONDOLA	100	33.89	Tons				

Total Tax
Total Ticket

203WM

Driver's Signature

BILL OF LADING/SCALE TICKET

WASTE MANAGEMENT

BOEING # V2413

Generators Name & Address:
BOEING CO. - NORTH BOEING FIELD
7500 E. MARGINAL WAY S.
SEATTLE, WA. 98108

Billing: BOEING CO.
Contact Person: MARY JO DONNELLY
Contact Number: (206) 662-2534
Fax Number: (425) 294-9263

Acknowledgement of Loading

Jennifer Parsons
Name (Please Print)

Jennifer Parsons
Signature

BOEING - NORTH FIELD
Company

8/4/11
Date

Deliver To:

ALASKA RELOAD & RECYCLING FACILITY
70 SOUTH ALASKA STREET
SEATTLE, WASHINGTON 98134
TELEPHONE #: (206) 763-5025
MONDAY-FRIDAY 7:00AM-4:00PM

Disposal Facility:

COLUMBIA RIDGE LANDFILL AND
RECYCLING FACILITY
18177 CEDAR SPRINGS LANE
ARLINGTON, OREGON 97812
TELEPHONE: (541) 454-2030

Transporter Name: (SELF HAUL)
Harlow

Truck #: H 327

Waste Profile # 102596WA

Waste Type: ADC

Expiration Date: 01/07/12

Robert Johnston
Driver's Name (Please Print)

Robert Johnston
SIGNATURE

NBF Stormline Project
Stockpiles 2 & 5

Remarks: 3 DT/SELF HAUL (TURNS) 8/2/11 THRU 8/4/11

WASTE MANAGEMENT

Alaska Street
70 S Alaska Street
Seattle, WA, 98134

Original
Ticket# 31604

Ph: 206 763 5025

Customer Name BOEING BOEING
Ticket Date 08/04/2011
Payment Type Credit Account
Manual Ticket#
Route AK
Hauling Ticket#
Destination
PO# 102596WA

Carrier SELF HAULER *
Vehicle# H32T
Volume
Container
Driver RJ
Check#
Billing# 0000013
Grid

	Time	Scale	Operator	Inbound		
In	08/04/2011 14:30:49	SCALE 1	lmercer		Gross	108780 lb
Out	08/04/2011 14:30:49		lmercer		Tare	41740 lb
					Net	67040 lb
					Tons	33.52

Comments HARLOW - LM (V2413)

	Product	LD%	Qty	UOM	Rate	Tax	Amount	Origin
1	Daily Cover-PCS-Tons-Pet	100	33.52	Tons				KING
2	GONDOLA 16.10/TN-GONDOLA	100	33.52	Tons				KING

Total Tax
Total Ticket

203WM
Driver's Signature

BILL OF LADING/SCALE TICKET

WASTE MANAGEMENT

BOEING # V2413

Generators Name & Address:
BOEING CO. - NORTH BOEING FIELD
7500 E. MARGINAL WAY S.
SEATTLE, WA. 98108

Billing: BOEING CO.
Contact Person: MARY JO DONNELLY
Contact Number: (206) 662-2534
Fax Number: (425) 294-9263

Acknowledgement of Loading

Jennifer Parsons
Name (Please Print)

Jennifer Parsons
Signature

BOEING - NORTH FIELD
Company

8/4/11
Date

Deliver To:

ALASKA RELOAD & RECYCLING FACILITY
70 SOUTH ALASKA STREET
SEATTLE, WASHINGTON 98134
TELEPHONE #: (206) 763-5025
MONDAY-FRIDAY 7:00AM-4:00PM

Disposal Facility:

COLUMBIA RIDGE LANDFILL AND
RECYCLING FACILITY
18177 CEDAR SPRINGS LANE
ARLINGTON, OREGON 97812
TELEPHONE: (541) 454-2030

Transporter Name: (SELF HAUL)
Harlow

Truck #: H 32 T

Waste Profile # 102596WA

Waste Type: ADC

Expiration Date: 01/07/12

Robert Johnston
Driver's Name (Please Print)

Robert Johnston
SIGNATURE

NBF Stormline Project
Stockpiles 2 & 5

Remarks: 3 DT/SELF HAUL (TURNS) 8/2/11 THRU 8/4/11

WASTE MANAGEMENT

Alaska Street
70 S Alaska Street
Seattle, WA, 98134

Reprint
Ticket# 31702

Ph: 206 763 5025

Customer Name BOEING BOEING
Ticket Date 08/09/2011
Payment Type Credit Account
Manual Ticket#
Route AK
Hauling Ticket#
Destination
PO# 102596WA

Carrier SELF HAULER *
Vehicle# H20T
Volume
Container
Driver DON AVERY
Check#
Billing# 0000013
Grid

	Time	Scale	Operator	Inbound		
In	08/09/2011 07:33:03	SCALE 1	lmercer		Gross	94360 lb
Out	08/09/2011 07:33:03		lmercer		Tare	40560 lb
					Net	53800 lb
					Tons	26.90

Comments HARLOW - LM (V2413)

	Product	LD%	Qty	UOM	Rate	Tax	Amount	Origin
1	Daily Cover-PCS-Tons-Pet	100	26.90	Tons				KING
2	GONDOLA 16.10/TN-GONDOLA	100	26.90	Tons				
3	LOCT$8.76W/32TON MIN-LOC	100	26.90	Tons				

Total Tax
Total Ticket

Driver's Signature

203WM

BILL OF LADING/SCALE TICKET

replaced by ticket 8-106

WASTE MANAGEMENT

BOEING # V2413

Generators Name & Address:
BOEING CO. - NORTH BOEING FIELD
7500 E. MARGINAL WAY S.
SEATTLE, WA. 98108

Billing: BOEING CO.
Contact Person: MARY JO DONNELLY
Contact Number: (206) 662-2534
Fax Number: (425) 294-9263

Acknowledgement of Loading

Jennifer Parsons
Name (Please Print)

Jennifer Parsons
Signature

BOEING - NORTH FIELD
Company

8/9/11
Date

Deliver To:

ALASKA RELOAD & RECYCLING FACILITY
70 SOUTH ALASKA STREET
SEATTLE, WASHINGTON 98134
TELEPHONE #: (206) 763-5025
MONDAY-FRIDAY 7:00AM-4:00PM

Disposal Facility:

COLUMBIA RIDGE LANDFILL AND
RECYCLING FACILITY
18177 CEDAR SPRINGS LANE
ARLINGTON, OREGON 97812
TELEPHONE: (541) 454-2030

Transporter Name: (SELF HAUL)
Marlow

Truck #: 20

Waste Profile # 102596WA

Waste Type: ADC

Expiration Date: 01/07/12

Driver's Name (Please Print)

Avery, Don
SIGNATURE

NBF Stormline Reroute
Stockpiles 2, 5, 6

Remarks: DT/SELF HAUL (TURN 5) 8/2/11 THRU 8/4/11

WASTE MANAGEMENT

Alaska Street
70 S Alaska Street
Seattle, WA, 98134

Reprint
Ticket# 31705

Ph: 206 763 5025

Customer Name BOEING BOEING
Ticket Date 08/09/2011
Payment Type Credit Account
Manual Ticket#
Route AK
Hauling Ticket#
Destination
PO# 102596WA

Carrier SELF HAULER *
Vehicle# H16T
Volume
Container
Driver DON HUMPHREY
Check#
Billing# 0000013
Grid

	Time	Scale	Operator	Inbound		
In	08/09/2011 07:46:56	SCALE 1	lmercer		Gross	104540 lb
Out	08/09/2011 07:46:56		lmercer		Tare	42020 lb
					Net	62520 lb
					Tons	31.26

Comments HARLOW - LM (V2413)

	Product	LD%	Qty	UOM	Rate	Tax	Amount	Origin
1	Daily Cover-PCS-Tons-Pet	100	31.26	Tons				KING
2	GONDOLA 16.10/TN-GONDOLA	100	31.26	Tons				
3	LOCT$8.76W/32TON MIN-LOC	100	31.26	Tons				

Total Tax
Total Ticket

203WM Driver's Signature

BILL OF LADING/SCALE TICKET

WASTE MANAGEMENT

BOEING # V2413

Generators Name & Address:
BOEING CO. - NORTH BOEING FIELD
7500 E. MARGINAL WAY S.
SEATTLE, WA. 98108

Billing: BOEING CO.
Contact Person: MARY JO DONNELLY
Contact Number: (206) 662-2534
Fax Number: (425) 294-9263

Acknowledgement of Loading

Jennifer Parsons
Name (Please Print)

Jennifer Parsons
Signature

BOEING - NORTH FIELD
Company

8/9/11
Date

Deliver To:

ALASKA RELOAD & RECYCLING FACILITY
70 SOUTH ALASKA STREET
SEATTLE, WASHINGTON 98134
TELEPHONE #: (206) 763-5025
MONDAY-FRIDAY 7:00AM-4:00PM

Disposal Facility:

COLUMBIA RIDGE LANDFILL AND
RECYCLING FACILITY
18177 CEDAR SPRINGS LANE
ARLINGTON, OREGON 97812
TELEPHONE: (541) 454-2030

Transporter Name: (SELF HAUL)

Harlow

Truck #: H6T

Waste Profile # 1Ø2596WA

Waste Type: ADC

Expiration Date: 01/07/12

Driver's Name (Please Print)

SIGNATURE

NBF Stormline Retrofit
Stockpiles 2 & 5

Remarks: 3 DT/SELF HAUL (TURNS) 8/2/11 THRU 8/4/11

WASTE MANAGEMENT

Alaska Street
70 S Alaska Street
Seattle, WA, 98134

Original
Ticket# 31706

Ph: 206 763 5025

Customer Name BOEING BOEING
Ticket Date 08/09/2011
Payment Type Credit Account
Manual Ticket#
Route AK
Hauling Ticket#
Destination
PO# 102596WA

Carrier SELF HAULER *
Vehicle# H20T
Volume
Container
Driver DON AVERY
Check#
Billing# 0000013
Grid

	Time	Scale	Operator	Inbound		
In	08/09/2011 07:33:03	SCALE 1	lmercer		Gross	94360 lb*
Out	08/09/2011 07:33:03		lmercer		Tare	40560 lb*
					Net	53800 lb
			* Manual Weight		Tons	26.90

Comments HARLOW - LM (V2413) REPLACES VOIDED # 31702

	Product	LD%	Qty	UOM	Rate	Tax	Amount	Origin
1	Daily Cover-PCS-Tons-Pet	100	26.90	Tons				KING
2	GONDOLA 16.10/TN-GONDOLA	100	26.90	Tons				KING

Total Tax
Total Ticket

Driver's Signature

203DM

MANAGEMENT

Alaska Street
70 S Alaska Street
Seattle, WA, 98134

Original
Ticket# 31702

Ph: 206 763 5025

Customer Name BOEING BOEING
Ticket Date 08/09/2011
Payment Type Credit Account
Manual Ticket#
Route AK
Hauling Ticket#
Destination
PO# 102596WA

Carrier SELF HAULER *
Vehicle# H20T
Container
Driver DON AVERY
Check#
Billing# 0000013
Grid

Volume

	Time	Scale	Operator	Inbound		
In	08/09/2011 07:33:03	SCALE 1	lmercer		Gross	94360 lb
Out	08/09/2011 07:33:03		lmercer		Tare	40560 lb
					Net	53800 lb
					Tons	26.90

Comments HARLOW - LM (V2413)

	Product	LD%	Qty	UOM	Rate	Tax	Amount	Origin
1	Daily Cover-PCS-Tons-Pet	100	26.90	Tons				KING
2	GONDOLA 16.10/TN-GONDOLA	100	26.90	Tons				
3	LOCT$8.76W/32TON MIN-LOC	100	26.90	Tons				

Total Tax
Total Ticket

Driver's Signature

203WM

BILL OF LADING/SCALE TICKET

WASTE MANAGEMENT

BOEING # V2413

Generators Name & Address:
BOEING CO. - NORTH BOEING FIELD
7500 E. MARGINAL WAY S.
SEATTLE, WA. 98108

Billing: BOEING CO.
Contact Person: MARY JO DONNELLY
Contact Number: (206) 662-2534
Fax Number: (425) 294-9263

Acknowledgement of Loading

Jennifer Parsons
Name (Please Print)

Jennifer Parsons
Signature

BOEING - NORTH FIELD
Company

8/9/11
Date

Deliver To:

ALASKA RELOAD & RECYCLING FACILITY
70 SOUTH ALASKA STREET
SEATTLE, WASHINGTON 98134
TELEPHONE #: (206) 763-5025
MONDAY-FRIDAY 7:00AM-4:00PM

Disposal Facility:

COLUMBIA RIDGE LANDFILL AND
RECYCLING FACILITY
18177 CEDAR SPRINGS LANE
ARLINGTON, OREGON 97812
TELEPHONE: (541) 454-2030

Transporter Name: (SELF HAUL)
Marlow

Truck #: H20T

Waste Profile # 102596WA

Waste Type: ADC

Expiration Date: 01/07/12

Driver's Name (Please Print)

Avery, Don
SIGNATURE

NBF Stormline Reroute
Stockpiles 2, 5, 6

Remarks: DT/SELF HAUL (TUPMS) 8/2/11 THRU 8/4/11

WASTE MANAGEMENT

Alaska Street
70 S Alaska Street
Seattle, WA, 98134

Original
Ticket# 31707

Ph: 206 763 5025

Customer Name BOEING BOEING
Ticket Date 08/09/2011
Payment Type Credit Account
Manual Ticket#
Route AK
Hauling Ticket#
Destination
PO# 102596WA

Carrier SELF HAULER *
Vehicle# H16T
Container
Driver DON HUMPHREY
Check#
Billing# 0000013
Grid

Volume

	Time	Scale	Operator	Inbound		
In	08/09/2011 07:46:56	SCALE 1	lmercer		Gross	104540 lb*
Out	08/09/2011 07:46:56		lmercer		Tare	42020 lb*
					Net	62520 lb
			* Manual Weight		Tons	31.26

Comments HARLOW - LM (V2413) (REPLACES VOIDED # 31705)

	Product	LD%	Qty	UOM	Rate	Tax	Amount	Origin
1	Daily Cover-PCS-Tons-Pet	100	31.26	Tons				KING
2	GONDOLA 16.10/TN-GONDOLA	100	31.26	Tons				

Total Tax
Total Ticket

203WM

Driver's Signature

WASTE MANAGEMENT

Alaska Street
70 S Alaska Street
Seattle, WA, 98134

Void Reprint
Ticket# 31705

Ph: 206 763 5025

Customer Name BOEING BOEING
Ticket Date 08/09/2011
Payment Type Credit Account
Manual Ticket#
Route AK
Hauling Ticket#
Destination
PO# 102596WA

Carrier SELF HAULER *
Vehicle# H16T
Volume
Container
Driver DON HUMPHREY
Check#
Billing# 0000013

	Time	Scale	Operator	Inbound		
In	08/09/2011 07:46:56	SCALE 1	lmercer		Gross	104540 lb
Out	08/09/2011 07:46:56		lmercer		Tare	42020 lb
					Net	62520 lb
					Tons	31.26

Comments HARLOW - LM (V2413)

Void Reason REMOVED LOCAL TRANS - SELF HAULED - LM

	Product	LD%	Qty	UOM	Rate	Tax	Amount	Origin
1	Daily Cover-PCS-Tons-Pet	100	31.26	Tons				KING
2	GONDOLA 16.10/TN-GONDOLA	100	31.26	Tons				
3	LOCT$8.76W/32TON MIN-LOC	100	31.26	Tons				

Total Tax
Total Ticket

203WM
Driver's Signature

BILL OF LADING/SCALE TICKET

WASTE MANAGEMENT

BOEING # V2413

Generators Name & Address:
BOEING CO. - NORTH BOEING FIELD
7500 E. MARGINAL WAY S.
SEATTLE, WA. 98108

Billing: BOEING CO.
Contact Person: MARY JO DONNELLY
Contact Number: (206) 662-2534
Fax Number: (425) 294-9263

Acknowledgement of Loading

Jennifer Parsons
Name (Please Print)

Jennifer Parsons
Signature

BOEING - NORTH FIELD
Company

8/9/11
Date

Deliver To:

ALASKA RELOAD & RECYCLING FACILITY
70 SOUTH ALASKA STREET
SEATTLE, WASHINGTON 98134
TELEPHONE #: (206) 763-5025
MONDAY-FRIDAY 7:00AM-4:00PM

Disposal Facility:

COLUMBIA RIDGE LANDFILL AND
RECYCLING FACILITY
18177 CEDAR SPRINGS LANE
ARLINGTON, OREGON 97812
TELEPHONE: (541) 454-2030

Transporter Name: (SELF HAUL)
Marlow

Truck #: H16T

Waste Profile # 102596WA

Waste Type: ADC

Expiration Date: 01/07/12

Don Humphrey
Driver's Name (Please Print)

SIGNATURE

Remarks: DT/SELF HAUL (TURN 5)

NBF Stormline Reroute
Stockpiles 2, 5, 6

8/2/11 THRU 8/4/11

WASTE MANAGEMENT

Alaska Street
70 S Alaska Street
Seattle, WA, 98134

Original
Ticket# 31710

Ph: 206 763 5025

Customer Name BOEING BOEING
Ticket Date 08/09/2011
Payment Type Credit Account
Manual Ticket#
Route AK
Hauling Ticket#
Destination
PO# 102596WA

Carrier SELF HAULER *
Vehicle# H20T
Volume
Container
Driver DON AVERY
Check#
Billing# 0000013
Grid

	Time	Scale	Operator	Inbound		
In	08/09/2011 08:21:18	SCALE 1	lmercer		Gross	95800 lb
Out	08/09/2011 08:21:18		lmercer		Tare	40560 lb
					Net	55240 lb
					Tons	27.62

Comments HARLOW - LM (V2413)

	Product	LD%	Qty	UOM	Rate	Tax	Amount	Origin
1	Daily Cover-PCS-Tons-Pet	100	27.62	Tons				KING
2	GONDOLA 16.10/TN-GONDOLA	100	27.62	Tons				

Total Tax
Total Ticket

Driver's Signature

203WM

BILL OF LADING/SCALE TICKET

WASTE MANAGEMENT

BOEING # V2413

Generators Name & Address:
BOEING CO. - NORTH BOEING FIELD
7500 E. MARGINAL WAY S.
SEATTLE, WA. 98108

Billing: BOEING CO.
Contact Person: MARY JO DONNELLY
Contact Number: (206) 662-2534
Fax Number: (425) 294-9263

Acknowledgement of Loading

Jennifer Parsons
Name (Please Print)

Jennifer Parsons
Signature

BOEING - NORTH FIELD
Company

8/9/11
Date

Deliver To:

ALASKA RELOAD & RECYCLING FACILITY
70 SOUTH ALASKA STREET
SEATTLE, WASHINGTON 98134
TELEPHONE #: (206) 763-5025
MONDAY-FRIDAY 7:00AM-4:00PM

Disposal Facility:

COLUMBIA RIDGE LANDFILL AND
RECYCLING FACILITY
18177 CEDAR SPRINGS LANE
ARLINGTON, OREGON 97812
TELEPHONE: (541) 454-2030

Transporter Name: (SELF HAUL)
Marlow

Truck #: H20T

Waste Profile # 102596WA

Waste Type: ADC

Expiration Date: 01/07/12

Driver's Name (Please Print)

Avery Don
SIGNATURE

NBF Stormline Reroute
Stockpiles 2, 5, 6

Remarks: DT/SELF HAUL (TUPMS) 8/2/11 THRU 8/4/11

WASTE MANAGEMENT

Alaska Street
70 S Alaska Street
Seattle, WA, 98134

Reprint
Ticket# 31711

Ph: 206 763 5025

Customer Name BOEING BOEING
Ticket Date 08/09/2011
Payment Type Credit Account
Manual Ticket#
Route AK
Hauling Ticket#
Destination
PO# 102596WA

Carrier SELF HAULER *
Vehicle# HI6T
Volume
Container
Driver DON HUMPHREY
Check#
Billing# 0000013
Grid

	Time	Scale	Operator	Inbound		
In	08/09/2011 08:24:57	SCALE 1	lmercer		Gross	101880 lb
Out	08/09/2011 08:24:57		lmercer		Tare	42020 lb
					Net	59860 lb
					Tons	29.93

Comments HARLOW - LM (V2413)

	Product	LD%	Qty	UOM	Rate	Tax	Amount	Origin
1	Daily Cover-PCS-Tons-Pet	100	29.93	Tons				KING
2	GONDOLA 16.10/TN-GONDOLA	100	29.93	Tons				

Total Tax
Total Ticket

203WM Driver's Signature

BILL OF LADING/SCALE TICKET

WASTE MANAGEMENT

BOEING # V2413

Generators Name & Address:
BOEING CO. - NORTH BOEING FIELD
7500 E. MARGINAL WAY S.
SEATTLE, WA. 98108.

Billing: BOEING CO.
Contact Person: MARY JO DONNELLY
Contact Number: (206) 662-2534
Fax Number: (425) 294-9263

Acknowledgement of Loading

Jennifer Parsons
Name (Please Print)

Jennifer Parsons
Signature

BOEING - NORTH FIELD
Company

8/9/11
Date

Deliver To:

ALASKA RELOAD & RECYCLING FACILITY
70 SOUTH ALASKA STREET
SEATTLE, WASHINGTON 98134
TELEPHONE #: (206) 763-5025
MONDAY-FRIDAY 7:00AM-4:00PM

Disposal Facility:

COLUMBIA RIDGE LANDFILL AND
RECYCLING FACILITY
18177 CEDAR SPRINGS LANE
ARLINGTON, OREGON 97812
TELEPHONE: (541) 454-2030

Transporter Name: (SELF HAUL)
Marlow

Truck #: H16T

Waste Profile # 102596WA

Waste Type: ADC

Expiration Date: 01/07/12

Don Humphrey
Driver's Name (Please Print)

SIGNATURE

Remarks: DT/SELF HAUL (TURN 5) 3

NBF Stormline Reroute
Stockpiles 2, 5, 6

8/2/11 THRU 8/4/11

WASTE MANAGEMENT

Alaska Street
70 S Alaska Street
Seattle, WA, 98134

Original
Ticket# 31720

Ph: 206 763 5025

Customer Name BOEING BOEING
Ticket Date 08/09/2011
Payment Type Credit Account
Manual Ticket#
Route AK
Hauling Ticket#
Destination
PO# 102596WA

Carrier SELF HAULER *
Vehicle# H20T
Container
Driver DON AVERY
Check#
Billing# 0000013
Grid

Volume

	Time	Scale	Operator	Inbound		
In	08/09/2011 09:06:42	SCALE 1	lmercer		Gross	95600 lb
Out	08/09/2011 09:06:42		lmercer		Tare	40560 lb
					Net	55040 lb
					Tons	27.52

Comments HARLOW - LM (V2413)

	Product	LD%	Qty	UOM	Rate	Tax	Amount	Origin
1	Daily Cover-PCS-Tons-Pet	100	27.52	Tons				KING
2	GONDOLA 16.10/TN-GONDOLA	100	27.52	Tons				

Total Tax
Total Ticket

Driver's Signature

203

BILL OF LADING/SCALE TICKET

WASTE MANAGEMENT

BOEING # V2413

Generators Name & Address:
BOEING CO. - NORTH BOEING FIELD
7500 E. MARGINAL WAY S.
SEATTLE, WA. 98108

Billing: BOEING CO.
Contact Person: MARY JO DONNELLY
Contact Number: (206) 662-2534
Fax Number: (425) 294-9263

Acknowledgement of Loading

Jennifer Parsons
Name (Please Print)

Jennifer Parsons
Signature

BOEING - NORTH FIELD
Company

8/9/11
Date

Deliver To:

ALASKA RELOAD & RECYCLING FACILITY
70 SOUTH ALASKA STREET
SEATTLE, WASHINGTON 98134
TELEPHONE #: (206) 763-5025
MONDAY-FRIDAY 7:00AM-4:00PM

Disposal Facility:

COLUMBIA RIDGE LANDFILL AND
RECYCLING FACILITY
18177 CEDAR SPRINGS LANE
ARLINGTON, OREGON 97812
TELEPHONE: (541) 454-2030

Transporter Name: (SELF HAUL)
Marlow

Truck #: H20T

Waste Profile # 102596WA

Waste Type: ADC

Expiration Date: 01/07/12

Driver's Name (Please Print)

Avery, Don
SIGNATURE

NBF Stormline Reroute
Stockpiles 2, 5, 6

Remarks: DT/SELF HAUL (TURNS) 8/2/11 THRU 8/4/11

WASTE MANAGEMENT

Alaska Street
70 S Alaska Street
Seattle, WA, 98134

Reprint ✓
Ticket# 31721

Ph: 206 763 5025

Customer Name BOEING BOEING
Ticket Date 08/09/2011
Payment Type Credit Account
Manual Ticket#
Route AK
Hauling Ticket#
Destination
PO# 102596WA

Carrier SELF HAULER *
Vehicle# H16T
Volume
Container
Driver DON HUMPHREY
Check#
Billing# 0000013
Grid

	Time	Scale	Operator	Inbound		
In	08/09/2011 09:14:54	SCALE 1	lmercer		Gross	99420 lb
Out	08/09/2011 09:14:54		lmercer		Tare	42020 lb
					Net	57400 lb
					Tons	28.70

Comments HARLOW - LM (V2413)

	Product	LD%	Qty	UOM	Rate	Tax	Amount	Origin
1	Daily Cover-PCS-Tons-Pet	100	28.70	Tons				KING
2	GONDOLA 16.10/TN-GONDOLA	100	28.70	Tons				

Total Tax
Total Ticket

Driver's Signature

2039WM

BILL OF LADING/SCALE TICKET

WASTE MANAGEMENT

BOEING # V2413

Generators Name & Address:
BOEING CO. - NORTH BOEING FIELD
7500 E. MARGINAL WAY S.
SEATTLE, WA. 98108

Billing: BOEING CO.
Contact Person: MARY JO DONNELLY
Contact Number: (206) 662-2534
Fax Number: (425) 294-9263

Acknowledgement of Loading

Jennifer Parsons
Name (Please Print)

Jennifer Parsons
Signature

BOEING - NORTH FIELD
Company

8/9/11
Date

Deliver To:

ALASKA RELOAD & RECYCLING FACILITY
70 SOUTH ALASKA STREET
SEATTLE, WASHINGTON 98134
TELEPHONE #: (206) 763-5025
MONDAY-FRIDAY 7:00AM-4:00PM

Disposal Facility:

COLUMBIA RIDGE LANDFILL AND
RECYCLING FACILITY
18177 CEDAR SPRINGS LANE
ARLINGTON, OREGON 97812
TELEPHONE: (541) 454-2030

Transporter Name: (SELF HAUL)
Marlow

Truck #: H16T

Waste Profile # 102596WA

Waste Type: ADC

Expiration Date: 01/07/12

Don Humphrey
Driver's Name (Please Print)

SIGNATURE

NBF Stormline Reroute
Stockpiles 2, 5, 6

Remarks: DT/SELF HAUL (TUPMS) 8/2/11 THRU 8/4/11

WASTE MANAGEMENT

Alaska Street
70 S Alaska Street
Seattle, WA, 98134

Original
Ticket# 31726

Ph: 206 763 5025

Customer Name BOEING BOEING
Ticket Date 08/09/2011
Payment Type Credit Account
Manual Ticket#
Route AK
Hauling Ticket#
Destination
PO# 102596WA

Carrier SELF HAULER *
Vehicle# H20T
Volume
Container
Driver DON AVERY
Check#
Billing# 0000013
Grid

	Time	Scale	Operator	Inbound		
In	08/09/2011 09:57:00	SCALE 1	lmercer		Gross	100660 lb
Out	08/09/2011 09:57:00		lmercer		Tare	40560 lb
					Net	60100 lb
					Tons	30.05

Comments HARLOW - LM (V2413)

	Product	LD%	Qty	UOM	Rate	Tax	Amount	Origin
1	Daily Cover-PCS-Tons-Pet	100	30.05	Tons				KING
2	GONDOLA 16.10/TN-GONDOLA	100	30.05	Tons				

Total Tax
Total Ticket

203WM Driver's Signature

BILL OF LADING/SCALE TICKET

WASTE MANAGEMENT

BOEING # V2413

Generators Name & Address:
BOEING CO. - NORTH BOEING FIELD
7500 E. MARGINAL WAY S.
SEATTLE, WA. 98108

Billing: BOEING CO.
Contact Person: MARY JO DONNELLY
Contact Number: (206) 662-2534
Fax Number: (425) 294-9263

Acknowledgement of Loading

Jennifer Parsons
Name (Please Print)

Jennifer Parsons
Signature

BOEING - NORTH FIELD
Company

8/9/11
Date

Deliver To:

ALASKA RELOAD & RECYCLING FACILITY
70 SOUTH ALASKA STREET
SEATTLE, WASHINGTON 98134
TELEPHONE #: (206) 763-5025
MONDAY-FRIDAY 7:00AM-4:00PM

Disposal Facility:

COLUMBIA RIDGE LANDFILL AND
RECYCLING FACILITY
18177 CEDAR SPRINGS LANE
ARLINGTON, OREGON 97812
TELEPHONE: (541) 454-2030

Transporter Name: (SELF HAUL)
Marlow

Truck #: H20T

Waste Profile # 102596WA

Waste Type: ADC

Expiration Date: 01/07/12

Driver's Name (Please Print)

Avery Don
SIGNATURE

Remarks: DT/SELF HAUL (TURN 5) 8/2/11 THRU 8/4/11

NBF Stormline Reroute
Stockpiles 2, 5, 6

WASTE MANAGEMENT

Alaska Street
70 S Alaska Street
Seattle, WA, 98134

Reprint
Ticket# 31728

Ph: 206 763 5025

Customer Name BOEING BOEING
Ticket Date 08/09/2011
Payment Type Credit Account
Manual Ticket#
Route AK
Hauling Ticket#
Destination
PO# 102596WA

Carrier SELF HAULER *
Vehicle# H16T
Volume
Container
Driver DON HUMPHREY
Check#
Billing# 0000013
Grid

	Time	Scale	Operator	Inbound		
In	08/09/2011 10:06:51	SCALE 1	lmercer		Gross	107900 lb
Out	08/09/2011 10:06:51		lmercer		Tare	42020 lb
					Net	65880 lb
					Tons	32.94

Comments HARLOW - LM (V2413)

	Product	LD%	Qty	UOM	Rate	Tax	Amount	Origin
1	Daily Cover-PCS-Tons-Pet	100	32.94	Tons				KING
2	GONDOLA 16.10/TN-GONDOLA	100	32.94	Tons				

Total Tax
Total Ticket

203WM.
Driver's Signature

BILL OF LADING/SCALE TICKET

WASTE MANAGEMENT

BOEING # V2413

Generators Name & Address:
BOEING CO. - NORTH BOEING FIELD
7500 E. MARGINAL WAY S.
SEATTLE, WA. 98108

Billing: BOEING CO.
Contact Person: MARY JO DONNELLY
Contact Number: (206) 662-2534
Fax Number: (425) 294-9263

Acknowledgement of Loading

Jennifer Parsons
Name (Please Print)

Jennifer Parsons
Signature

BOEING - NORTH FIELD
Company

8/9/11
Date

Deliver To:

ALASKA RELOAD & RECYCLING FACILITY
70 SOUTH ALASKA STREET
SEATTLE, WASHINGTON 98134
TELEPHONE #: (206) 763-5025
MONDAY-FRIDAY 7:00AM-4:00PM

Disposal Facility:

COLUMBIA RIDGE LANDFILL AND
RECYCLING FACILITY
18177 CEDAR SPRINGS LANE
ARLINGTON, OREGON 97812
TELEPHONE: (541) 454-2030

Transporter Name: (SELF HAUL)
Marlow

Truck #: H16T

Waste Profile # 102596WA

Waste Type: ADC

Expiration Date: 01/07/12

Don Humphrey
Driver's Name (Please Print)

SIGNATURE

NBF Stormline Reroute
Stockpiles 2, 5, 6

Remarks: DT/SELF HAUL (TURN 5) 8/2/11 THRU 8/4/11

WASTE MANAGEMENT

Alaska Street
70 S Alaska Street
Seattle, WA, 98134

Original
Ticket# 31733

Ph: 206 763 5025

Customer Name BOEING BOEING
Ticket Date 08/09/2011
Payment Type Credit Account
Manual Ticket#
Route AK
Hauling Ticket#
Destination
PO# 102596WA

Carrier SELF HAULER *
Vehicle# H20T
Volume
Container
Driver DON AVERY
Check#
Billing# 0000013
Grid

	Time	Scale	Operator	Inbound		
In	08/09/2011 10:46:33	SCALE 1	lmercer		Gross	99040 lb
Out	08/09/2011 10:46:33		lmercer		Tare	40560 lb
					Net	58480 lb
					Tons	29.24

Comments HARLOW - LM (V2413)

	Product	LD%	Qty	UOM	Rate	Tax	Amount	Origin
1	Daily Cover-PCS-Tons-Pet	100	29.24	Tons				KING
2	GONDOLA 16.10/TN-GONDOLA	100	29.24	Tons				

Total Tax
Total Ticket

203WM Driver's Signature

BILL OF LADING/SCALE TICKET

WASTE MANAGEMENT

BOEING # V2413

Generators Name & Address:
BOEING CO. - NORTH BOEING FIELD
7500 E. MARGINAL WAY S.
SEATTLE, WA. 98108

Billing: BOEING CO.
Contact Person: MARY JO DONNELLY
Contact Number: (206) 662-2534
Fax Number: (425) 294-9263

Acknowledgement of Loading

Jennifer Parsons
Name (Please Print)

Jennifer Parsons
Signature

BOEING - NORTH FIELD
Company

8/9/11
Date

Deliver To:

ALASKA RELOAD & RECYCLING FACILITY
70 SOUTH ALASKA STREET
SEATTLE, WASHINGTON 98134
TELEPHONE #: (206) 763-5025
MONDAY-FRIDAY 7:00AM-4:00PM

Disposal Facility:

COLUMBIA RIDGE LANDFILL AND
RECYCLING FACILITY
18177 CEDAR SPRINGS LANE
ARLINGTON, OREGON 97812
TELEPHONE: (541) 454-2030

Transporter Name: (SELF HAUL)
Marlow

Truck #: H20T

Waste Profile # 102596WA

Waste Type: ADC

Expiration Date: 01/07/12

Driver's Name (Please Print)

Avery Don
SIGNATURE

NBF Storm line Reroute
Stockpiles 2, 5, 6

Remarks: DT/SELF HAUL (TURN 5) 8/2/11 THRU 8/4/11

WASTE MANAGEMENT

Alaska Street
70 S Alaska Street
Seattle, WA, 98134

Original
Ticket# 31736

Ph: 206 763 5025

Customer Name BOEING BOEING
Ticket Date 08/09/2011
Payment Type Credit Account
Manual Ticket#
Route AK
Hauling Ticket#
Destination
PO# 102596WA

Carrier SELF HAULER *
Vehicle# H16T
Volume
Container
Driver DON HUMPHREY
Check#
Billing# 0000013
Grid

	Time	Scale	Operator	Inbound		
In	08/09/2011 11:00:44	SCALE 1	lmercer		Gross	103500 lb
Out	08/09/2011 11:00:44		lmercer		Tare	42020 lb
					Net	61480 lb
					Tons	30.74

Comments HARLOW - LM (V2413)

	Product	LD%	Qty	UOM	Rate	Tax	Amount	Origin
1	Daily Cover-PCS-Tons-Pet	100	30.74	Tons				KING
2	GONDOLA 16.10/TN-GONDOLA	100	30.74	Tons				

Total Tax
Total Ticket

203WM Driver's Signature DH

BILL OF LADING/SCALE TICKET

WASTE MANAGEMENT

BOEING # V2413

Generators Name & Address:
BOEING CO. - NORTH BOEING FIELD
7500 E. MARGINAL WAY S.
SEATTLE, WA. 98108

Billing: BOEING CO.
Contact Person: MARY JO DONNELLY
Contact Number: (206) 662-2534
Fax Number: (425) 294-9263

Acknowledgement of Loading

Jennifer Parsons
Name (Please Print)

Jennifer Parsons
Signature

BOEING - NORTH FIELD
Company

8/9/11
Date

Deliver To:

ALASKA RELOAD & RECYCLING FACILITY
70 SOUTH ALASKA STREET
SEATTLE, WASHINGTON 98134
TELEPHONE #: (206) 783-5025
MONDAY-FRIDAY 7:00AM-4:00PM

Disposal Facility:

COLUMBIA RIDGE LANDFILL AND
RECYCLING FACILITY
18177 CEDAR SPRINGS LANE
ARLINGTON, OREGON 97812
TELEPHONE: (541) 454-2030

Transporter Name: (SELF HAUL)
Marlow

Truck #: H16T

Waste Profile # 102596WA

Waste Type: ADC

Expiration Date: 01/07/12

Don Humphrey
Driver's Name (Please Print)

Don Humphrey
SIGNATURE

NBF Stormline Reroute
Stockpiles 2, 5, 6

Remarks: DT/SELF HAUL (TURN 5) 8/2/11 THRU 8/4/11

WASTE MANAGEMENT

Alaska Street
70 S Alaska Street
Seattle, WA, 98134

Original
Ticket# 31739

Ph: 206 763 5025

Customer Name BOEING BOEING
Ticket Date 08/09/2011
Payment Type Credit Account
Manual Ticket#
Route AK
Hauling Ticket#
Destination
PO# 102596WA

Carrier SELF HAULER *
Vehicle# H20T
Volume
Container
Driver DON AVERY
Check#
Billing# 0000013
Grid

	Time	Scale	Operator	Inbound		
In	08/09/2011 11:30:27	SCALE 1	lmercer		Gross	95300 lb
Out	08/09/2011 11:30:27		lmercer		Tare	40560 lb
					Net	54740 lb
					Tons	27.37

Comments HARLOW V2413 /BE

	Product	LD%	Qty	UOM	Rate	Tax	Amount	Origin
1	Daily Cover-PCS-Tons-Pet	100	27.37	Tons				KING
2	GONDOLA 16.10/TN-GONDOLA	100	27.37	Tons				KING

Total Tax
Total Ticket

Driver's Signature

203WM

BILL OF LADING/SCALE TICKET

WASTE MANAGEMENT

BOEING # V2413

Generators Name & Address:
BOEING CO. - NORTH BOEING FIELD
7500 E. MARGINAL WAY S.
SEATTLE, WA. 98108

Billing: BOEING CO.
Contact Person: MARY JO DONNELLY
Contact Number: (206) 662-2534
Fax Number: (425) 294-9263

Acknowledgement of Loading

Jennifer Parsons
Name (Please Print)

Jennifer Parsons
Signature

BOEING - NORTH FIELD
Company

8/9/11
Date

Deliver To:

ALASKA RELOAD & RECYCLING FACILITY
70 SOUTH ALASKA STREET
SEATTLE, WASHINGTON 98134
TELEPHONE #: (206) 763-5025
MONDAY-FRIDAY 7:00AM-4:00PM

Disposal Facility:

COLUMBIA RIDGE LANDFILL AND
RECYCLING FACILITY
18177 CEDAR SPRINGS LANE
ARLINGTON, OREGON 97812
TELEPHONE: (541) 454-2030

Transporter Name: (SELF HAUL)
Marlow

Truck #: H20T

Waste Profile # 102596WA

Waste Type: ADC

Expiration Date: 01/07/12

Driver's Name (Please Print)

Avery Don
SIGNATURE

Remarks: DT/SELF HAUL (TUPMS) 3

NBF Stormline Reroute
Stockpiles 2, 5, 6

8/2/11 THRU 8/4/11

WASTE MANAGEMENT

Alaska Street
70 S Alaska Street
Seattle, WA, 98134

Original
Ticket# 31740

Ph: 206 763 5025

Customer Name BOEING BOEING
Ticket Date 08/09/2011
Payment Type Credit Account
Manual Ticket#
Route AK
Hauling Ticket#
Destination
PO# 102596WA

Carrier SELF HAULER *
Vehicle# H16T
Volume
Container
Driver DON HUMPHREY
Check#
Billing# 0000013
Grid

	Time	Scale	Operator	Inbound		
In	08/09/2011 11:49:35	SCALE 1	lmercer		Gross	99860 lb
Out	08/09/2011 11:49:35		lmercer		Tare	42020 lb
					Net	57840 lb
					Tons	28.92

Comments HARLOW V2413 /BE

	Product	LD%	Qty	UOM	Rate	Tax	Amount	Origin
1	Daily Cover-PCS-Tons-Pet	100	28.92	Tons				KING
2	GONDOLA 16.10/TN-GONDOLA	100	28.92	Tons				

Total Tax
Total Ticket

203WM Driver's Signature DH

BILL OF LADING/SCALE TICKET

WASTE MANAGEMENT

BOEING # V2413

Generators Name & Address:
BOEING CO. - NORTH BOEING FIELD
7500 E. MARGINAL WAY S.
SEATTLE, WA. 98108

Billing: BOEING CO.
Contact Person: MARY JO DONNELLY
Contact Number: (206) 662-2534
Fax Number: (425) 294-9263

Acknowledgement of Loading

Jennifer Parsons
Name (Please Print)

Jennifer Parsons
Signature

BOEING - NORTH FIELD
Company

8/9/11
Date

Deliver To:

ALASKA RELOAD & RECYCLING FACILITY
70 SOUTH ALASKA STREET
SEATTLE, WASHINGTON 98134
TELEPHONE #: (206) 763-5025
MONDAY-FRIDAY 7:00AM-4:00PM

Disposal Facility:

COLUMBIA RIDGE LANDFILL AND
RECYCLING FACILITY
18177 CEDAR SPRINGS LANE
ARLINGTON, OREGON 97812
TELEPHONE: (541) 454-2030

Transporter Name: (SELF HAUL)
Marlow

Truck #: H16T

Waste Profile # 102596WA

Waste Type: ADC

Expiration Date: 01/07/12

Don Humphrey
Driver's Name (Please Print)

SIGNATURE

NBF Stormline Reroute
Stockpiles 2, 5, 6

Remarks: DT/SELF HAUL (TURNS) 8/2/11 THRU 8/4/11

WASTE MANAGEMENT

Alaska Street
70 S Alaska Street
Seattle, WA, 98134

Original
Ticket# 31743

Ph: 206 763 5025

Customer Name BOEING BOEING
Ticket Date 08/09/2011
Payment Type Credit Account
Manual Ticket#
Route AK
Hauling Ticket#
Destination
PO# 102596WA

Carrier SELF HAULER *
Vehicle# H20T
Volume
Container
Driver DON AVERY
Check#
Billing# 0000013
Grid

	Time	Scale	Operator	Inbound		
In	08/09/2011 12:12:02	SCALE 1	lmercer		Gross	100540 lb
Out	08/09/2011 12:12:02		lmercer		Tare	40560 lb
					Net	59980 lb
					Tons	29.99

Comments HARLOW - LM (V2314)

	Product	LD%	Qty	UOM	Rate	Tax	Amount	Origin
1	Daily Cover-PCS-Tons-Pet	100	29.99	Tons				KING
2	GONDOLA 16.10/TN-GONDOLA	100	29.99	Tons				

Total Tax
Total Ticket

203WM Driver's Signature

BILL OF LADING/SCALE TICKET

WASTE MANAGEMENT

BOEING # V2413

Generators Name & Address:
BOEING CO. - NORTH BOEING FIELD
7500 E. MARGINAL WAY S.
SEATTLE, WA. 98108

Billing: BOEING CO.
Contact Person: MARY JO DONNELLY
Contact Number: (206) 662-2534
Fax Number: (425) 294-9263

Acknowledgement of Loading

Jennifer Parsons
Name (Please Print)

Jennifer Parsons
Signature

BOEING - NORTH FIELD
Company

8/9/11
Date

Deliver To:

ALASKA RELOAD & RECYCLING FACILITY
70 SOUTH ALASKA STREET
SEATTLE, WASHINGTON 98134
TELEPHONE #: (206) 763-5025
MONDAY-FRIDAY 7:00AM-4:00PM

Disposal Facility:

COLUMBIA RIDGE LANDFILL AND
RECYCLING FACILITY
18177 CEDAR SPRINGS LANE
ARLINGTON, OREGON 97812
TELEPHONE: (541) 454-2030

Transporter Name: (SELF HAUL)
Marlow

Truck #: H20T

Waste Profile # 102596WA

Waste Type: ADC

Expiration Date: 01/07/12

Driver's Name (Please Print)

Avery Don
SIGNATURE

NBF Storm line Reroute
Stockpiles 2, 5, 6

Remarks: DT/SELF HAUL (TURN 5) 8/2/11 THRU 8/4/11

WASTE MANAGEMENT

Alaska Street
70 S Alaska Street
Seattle, WA, 98134

Original
Ticket# 31745

Ph: 206 763 5025

Customer Name BOEING BOEING
Ticket Date 08/09/2011
Payment Type Credit Account
Manual Ticket#
Route AK
Hauling Ticket#
Destination
PO# 102596WA

Carrier SELF HAULER *
Vehicle# H16T
Volume
Container
Driver DON HUMPHREY
Check#
Billing# 0000013
Grid

	Time	Scale	Operator	Inbound		
In	08/09/2011 12:26:42	SCALE 1	lmercer		Gross	99340 lb
Out	08/09/2011 12:26:42		lmercer		Tare	42020 lb
					Net	57320 lb
					Tons	28.66

Comments HARLOW - LM (V2413)

	Product	LD%	Qty	UOM	Rate	Tax	Amount	Origin
1	Daily Cover-PCS-Tons-Pet	100	28.66	Tons				KING
2	GONDOLA 16.10/TN-GONDOLA	100	28.66	Tons				

Total Tax
Total Ticket

203WM

Driver's Signature DH

BILL OF LADING/SCALE TICKET

WASTE MANAGEMENT

BOEING # V2413

Generators Name & Address:
BOEING CO. - NORTH BOEING FIELD
7500 E. MARGINAL WAY S.
SEATTLE, WA. 98108

Billing: BOEING CO.
Contact Person: MARY JO DONNELLY
Contact Number: (206) 662-2534
Fax Number: (425) 294-9263

Acknowledgement of Loading

Jennifer Parsons
Name (Please Print)

Jennifer Parsons
Signature

BOEING - NORTH FIELD
Company

8/9/11
Date

Deliver To:

ALASKA RELOAD & RECYCLING FACILITY
70 SOUTH ALASKA STREET
SEATTLE, WASHINGTON 98134
TELEPHONE #: (206) 763-5025
MONDAY-FRIDAY 7:00AM-4:00PM

Disposal Facility:

COLUMBIA RIDGE LANDFILL AND
RECYCLING FACILITY
18177 CEDAR SPRINGS LANE
ARLINGTON, OREGON 97812
TELEPHONE: (541) 454-2030

Transporter Name: (SELF HAUL)
Marlow

Truck # H16T

Waste Profile # 102596WA

Waste Type: ADC

Expiration Date: 01/07/12

Don Humphing
Driver's Name (Please Print)

SIGNATURE

NBF Stormline Reroute
Stockpiles 2, 5, 6

Remarks: DT/SELF HAUL (TUPM5) 8/2/11 THRU 8/4/11

WASTE MANAGEMENT

Alaska Street
70 S Alaska Street
Seattle, WA, 98134

Reprint
Ticket# 31753

Ph: 206 763 5025

Customer Name BOEING BOEING
Ticket Date 08/09/2011
Payment Type Credit Account
Manual Ticket#
Route AK
Hauling Ticket#
Destination
PO# 102596WA

Carrier SELF HAULER *
Vehicle# H20T
Volume
Container
Driver DON AVERY
Check#
Billing# 0000013
Grid

	Time	Scale	Operator	Inbound		
In	08/09/2011 13:06:52	SCALE 1	lmercer		Gross	97500 lb
Out	08/09/2011 13:06:52		lmercer		Tare	40560 lb
					Net	56940 lb
					Tons	28.47

Comments HARLOW - LM (V2413)

	Product	LD%	Qty	UOM	Rate	Tax	Amount	Origin
1	Daily Cover-PCS-Tons-Pet	100	28.47	Tons				KING
2	GONDOLA 16.10/TN-GONDOLA	100	28.47	Tons				
3	LOCT$8.76W/32TON MIN-LOC	100	28.47	Tons				

Total Tax
Total Ticket

203WM
Driver's Signature

BILL OF LADING/SCALE TICKET

WASTE MANAGEMENT

BOEING # V2413

Generators Name & Address:
BOEING CO. - NORTH BOEING FIELD
7500 E. MARGINAL WAY S.
SEATTLE, WA. 98108

Billing: BOEING CO.
Contact Person: MARY JO DONNELLY
Contact Number: (206) 662-2534
Fax Number: (425) 294-9263

Acknowledgement of Loading

Jennifer Parsons
Name (Please Print)

Jennifer Parsons
Signature

BOEING - NORTH FIELD
Company

8/9/11
Date

Deliver To:

ALASKA RELOAD & RECYCLING FACILITY
70 SOUTH ALASKA STREET
SEATTLE, WASHINGTON 98134
TELEPHONE #: (206) 763-5025
MONDAY-FRIDAY 7:00AM-4:00PM

Disposal Facility:

COLUMBIA RIDGE LANDFILL AND
RECYCLING FACILITY
18177 CEDAR SPRINGS LANE
ARLINGTON, OREGON 97812
TELEPHONE: (541) 454-2030

Transporter Name: (SELF HAUL)
Marlow

Truck #: 420T

Waste Profile # 102596WA

Waste Type: ADC

Expiration Date: 01/07/12

Don Avery
Driver's Name (Please Print)

SIGNATURE

Remarks: DT/SELF HAUL (TUPMS)

NBF Stormline Reroute
Stockpiles 2, 5, 6

8/2/11 THRU 8/4/11

replaced by ticket 31762

WASTE MANAGEMENT

Alaska Street
70 S Alaska Street
Seattle, WA, 98134

Original
Ticket# 31757

Ph: 206 763 5025

Customer Name BOEING BOEING
Ticket Date 08/09/2011
Payment Type Credit Account
Manual Ticket#
Route AK
Hauling Ticket#
Destination
PO# 102596WA

Carrier SELF HAULER *
Vehicle# H167
Container
Driver DON HUMPHREY
Check#
Billing# 0000013
Grid

Volume

	Time	Scale	Operator	Inbound		
In	08/09/2011 13:17:27	SCALE 1	lmercer		Gross	103000 lb
Out	08/09/2011 13:17:27		lmercer		Tare	42020 lb
					Net	60980 lb
					Tons	30.49

Comments HARLOW - LM (V2413)

	Product	LD%	Qty	UOM	Rate	Tax	Amount	Origin
1	Daily Cover-PCS-Tons-Pet	100	30.49	Tons				KING
2	GONDOLA 16.10/TN-GONDOLA	100	30.49	Tons				

Total Tax
Total Ticket

203WM Driver's Signature DH

BILL OF LADING/SCALE TICKET

WASTE MANAGEMENT

BOEING # V2413

Generators Name & Address:
BOEING CO. - NORTH BOEING FIELD
7500 E. MARGINAL WAY S.
SEATTLE, WA. 98108

Billing: BOEING CO.
Contact Person: MARY JO DONNELLY
Contact Number: (206) 662-2534
Fax Number: (425) 294-9263

Acknowledgement of Loading

Jennifer Parsons
Name (Please Print)

Jennifer Parsons
Signature

BOEING - NORTH FIELD
Company

8/9/11
Date

Deliver To:

ALASKA RELOAD & RECYCLING FACILITY
70 SOUTH ALASKA STREET
SEATTLE, WASHINGTON 98134
TELEPHONE #: (206) 763-5025
MONDAY-FRIDAY 7:00AM-4:00PM

Disposal Facility:

COLUMBIA RIDGE LANDFILL AND
RECYCLING FACILITY
18177 CEDAR SPRINGS LANE
ARLINGTON, OREGON 97812
TELEPHONE: (541) 454-2030

Transporter Name: (SELF HAUL)
Marlow

Truck #: H16T

Waste Profile # 102596WA

Waste Type: ADC

Expiration Date: 01/07/12

Don Humphrey
Driver's Name (Please Print)

SIGNATURE

NBF Stormline Reroute
Stockpiles 2, 5, 6

Remarks: DT/SELF HAUL (TUPM5) 8/2/11 THRU 8/4/11

WASTE MANAGEMENT

Alaska Street
70 S Alaska Street
Seattle, WA, 98134

Original
Ticket# 31761

Ph: 206 763 5025

Customer Name BOEING BOEING
Ticket Date 08/09/2011
Payment Type Credit Account
Manual Ticket#
Route AK
Hauling Ticket#
Destination
PO# 102596WA

Carrier SELF HAULER *
Vehicle# H20T
Container
Driver DON AVERY
Check#
Billing# 0000013
Grid

Volume

	Time	Scale	Operator	Inbound		
In	08/09/2011 13:55:07	SCALE 1	lmercer		Gross	112160 lb
Out	08/09/2011 13:55:07		lmercer		Tare	40560 lb
					Net	71600 lb
					Tons	35.80

Comments HARLOW - LM (V2413)

	Product	LD%	Qty	UOM	Rate	Tax	Amount	Origin
1	Daily Cover-PCS-Tons-Pet	100	35.80	Tons				KING
2	GONDOLA 16.10/TN-GONDOLA	100	35.80	Tons				

Total Tax
Total Ticket

Driver's Signature

203WM

BILL OF LADING/SCALE TICKET

WASTE MANAGEMENT

BOEING # V2413

Generators Name & Address:
BOEING CO. - NORTH BOEING FIELD
7500 E. MARGINAL WAY S.
SEATTLE, WA. 98108.

Billing: BOEING CO.
Contact Person: MARY JO DONNELLY
Contact Number: (206) 662-2534
Fax Number: (425) 294-9263

Acknowledgement of Loading

Jennifer Parsons
Name (Please Print)

Jennifer Parsons
Signature

BOEING - NORTH FIELD
Company

8/9/11
Date

Deliver To:

ALASKA RELOAD & RECYCLING FACILITY
70 SOUTH ALASKA STREET
SEATTLE, WASHINGTON 98134
TELEPHONE #: (206) 763-5025
MONDAY-FRIDAY 7:00AM-4:00PM

Disposal Facility:

COLUMBIA RIDGE LANDFILL AND
RECYCLING FACILITY
18177 CEDAR SPRINGS LANE
ARLINGTON, OREGON 97812
TELEPHONE: (541) 454-2030

Transporter Name: (SELF HAUL)
Marlow

Truck #: H20T

Waste Profile # 102596WA

Waste Type: ADC

Expiration Date: 01/07/12

Driver's Name (Please Print)

Avery Don
SIGNATURE

NBF Stormline Reroute
Stockpiles 2, 5, 6

Remarks: DT/SELF HAUL (TURNS) 8/2/11 THRU 8/4/11

WASTE MANAGEMENT

Alaska Street
70 S Alaska Street
Seattle, WA, 98134

Original
Ticket# 31762

Ph: 206 763 5025

Customer Name BOEING BOEING
Ticket Date 08/09/2011
Payment Type Credit Account
Manual Ticket#
Route AK
Hauling Ticket#
Destination
PO# 102596WA

Carrier SELF HAULER *
Vehicle# H20T
Volume
Container
Driver DON AVERY
Check#
Billing# 0000013
Grid

	Time	Scale	Operator	Inbound		
In	08/09/2011 13:06:52	SCALE 1	lmercer		Gross	97500 lb*
Out	08/09/2011 13:06:52		lmercer		Tare	40560 lb*
					Net	56940 lb
			* Manual Weight		Tons	28.47

Comments HARLOW - LM (V2413) REPLACES VOIDED # 31753

	Product	LD%	Qty	UOM	Rate	Tax	Amount	Origin
1	Daily Cover-PCS-Tons-Pet	100	28.47	Tons				KING
2	GONDOLA 16.10/TN-GONDOLA	100	28.47	Tons				

Total Tax
Total Ticket

203WM
Driver's Signature

WASTE MANAGEMENT

Alaska Street
70 S Alaska Street
Seattle, WA, 98134 Ph: 206 763 5025

Original
Ticket# 31753

Customer Name BOEING BOEING
Ticket Date 08/09/2011
Payment Type Credit Account
Manual Ticket#
Route AK
Hauling Ticket#
Destination
PO# 102596WA

Carrier SELF HAULER *
Vehicle# H20T Volume
Container
Driver DON AVERY
Check#
Billing# 0000013
Grid

	Time	Scale	Operator	Inbound		
In	08/09/2011 13:06:52	SCALE 1	lmercer		Gross	97500 lb
Out	08/09/2011 13:06:52		lmercer		Tare	40560 lb
					Net	56940 lb
					Tons	28.47

Comments HARLOW - LM (V2413)

VOIDed
removed local trans

	Product	LDX	Qty	UOM	Rate	Tax	Amount	Origin
1	Daily Cover-PCS-Tons-Pet	100	28.47	Tons				KING
2	GONDOLA 16.10/TN-GONDOLA	100	28.47	Tons				
3	LOCT$8.76W/32TON MIN-LOC	100	28.47	Tons				

Total Tax
Total Ticket

Driver's Signature

203WM

BILL OF LADING/SCALE TICKET

WASTE MANAGEMENT

BOEING # V2413

Generators Name & Address:
BOEING CO. - NORTH BOEING FIELD
7500 E. MARGINAL WAY S.
SEATTLE, WA. 98108

Billing: BOEING CO.
Contact Person: MARY JO DONNELLY
Contact Number: (206) 662-2534
Fax Number: (425) 294-9263

Acknowledgement of Loading

Jennifer Parsons
Name (Please Print)

Jennifer Parsons
Signature

BOEING - NORTH FIELD
Company

8/9/11
Date

Deliver To:

ALASKA RELOAD & RECYCLING FACILITY
70 SOUTH ALASKA STREET
SEATTLE, WASHINGTON 98134
TELEPHONE #: (206) 763-5025
MONDAY-FRIDAY 7:00AM-4:00PM

Disposal Facility:

COLUMBIA RIDGE LANDFILL AND
RECYCLING FACILITY
18177 CEDAR SPRINGS LANE
ARLINGTON, OREGON 97812
TELEPHONE: (541) 454-2030

Transporter Name: (SELF HAUL)
Marlow

Truck #: H20T

Waste Profile # 102596WA

Waste Type: ADC

Expiration Date: 01/07/12

Driver's Name (Please Print)

Avery Don
SIGNATURE

NBF Stormline Reroute
Stockpiles 2, 5, 6

Remarks: DT/SELF HAUL (TURNS) 8/2/11 THRU 8/4/11

WASTE MANAGEMENT

Alaska Street
70 S Alaska Street
Seattle, WA, 98134

Original
Ticket# 31764

Ph: 206 763 5025

Customer Name BOEING BOEING
Ticket Date 08/09/2011
Payment Type Credit Account
Manual Ticket#
Route AK
Hauling Ticket#
Destination
PO# 102596WA

Carrier SELF HAULER *
Vehicle# H16T
Container
Driver DON HUMPHREY
Check#
Billing# 0000013
Grid

Volume

	Time	Scale	Operator	Inbound		
In	08/09/2011 14:12:48	SCALE 1	lmercer		Gross	124580 lb
Out	08/09/2011 14:12:48		lmercer		Tare	42020 lb
					Net	82560 lb
					Tons	41.28

Comments HARLOW - LM (V2413)

	Product	LD%	Qty	UOM	Rate	Tax	Amount	Origin
1	Daily Cover-PCS-Tons-Pet	100	41.28	Tons				KING
2	GONDOLA 16.10/TN-GONDOLA	100	41.28	Tons				

Total Tax
Total Ticket

203WM Driver's Signature DH

BILL OF LADING/SCALE TICKET

WASTE MANAGEMENT

BOEING # V2413

Generators Name & Address:
BOEING CO. - NORTH BOEING FIELD
7500 E. MARGINAL WAY S.
SEATTLE, WA. 98108

Billing: BOEING CO.
Contact Person: MARY JO DONNELLY
Contact Number: (206) 662-2534
Fax Number: (425) 294-9263

Acknowledgement of Loading

Jennifer Parsons
Name (Please Print)

Jennifer Parsons
Signature

BOEING - NORTH FIELD
Company

8/9/11
Date

Deliver To:

ALASKA RELOAD & RECYCLING FACILITY
70 SOUTH ALASKA STREET
SEATTLE, WASHINGTON 98134
TELEPHONE #: (206) 763-5025
MONDAY-FRIDAY 7:00AM-4:00PM

Disposal Facility:

COLUMBIA RIDGE LANDFILL AND
RECYCLING FACILITY
18177 CEDAR SPRINGS LANE
ARLINGTON, OREGON 97812
TELEPHONE: (541) 454-2030

Transporter Name: (SELF HAUL)
Marlow

Truck #: H16T

Waste Profile # 102596WA

Waste Type: ADC

Expiration Date: 01/07/12

Don Humphrey
Driver's Name (Please Print)

SIGNATURE

NBF Stormline Reroute
Stockpiles 2, 5, 6

Remarks: DT/SELF HAUL (TURNS) 3 8/2/11 THRU 8/4/11

WASTE MANAGEMENT

Alaska Street
70 S Alaska Street
Seattle, WA, 98134

Original
Ticket# 31775

Ph: 206 763 5025

Customer Name BOEING BOEING
Ticket Date 08/10/2011
Payment Type Credit Account
Manual Ticket#
Route AK
Hauling Ticket#
Destination
PO# 102596WA

Carrier R TRANSPORT R TRANSPORT
Vehicle# R51 Volume
Container
Driver RODNEY ROLLINS
Check#
Billing# 0000013
Grid

	Time	Scale	Operator	Inbound		
In	08/10/2011 07:31:17	SCALE 1	lmercer		Gross	99260 lb
Out	08/10/2011 07:31:17		lmercer		Tare	40600 lb
					Net	58660 lb
					Tons	29.33

Comments R TRANSP - LM (V2507)

	Product	LD%	Qty	UOM	Rate	Tax	Amount	Origin
1	Daily Cover-PCS-Tons-Pet	100	29.33	Tons				KING
2	GONDOLA 16.10/TN-GONDOLA	100	29.33	Tons				KING
3	LOCT$8.76W/32TON MIN-LOC	100	29.33	Tons				KING

Total Tax
Total Ticket

Driver's Signature

203WM

BILL OF LADING/SCALE TICKET

WASTE MANAGEMENT

BOEING # V2507 8/10/11 0700

Generators Name & Address:
BOEING CO - NORTH BOEING FIELD
7500 E. MARGINAL WAY S.
SEATTLE, WA. 98108

Billing: BOEING
Contact Person: JENNIFER PARSONS
Contact Number: (206) 715-7991
Fax Number:

Acknowledgement of Loading

Shawn Cook
Name (Please Print)

Signature

BOEING CO./NORTH BOEING FIELD
Company

8-10-11
Date

Deliver To:

ALASKA RELOAD & RECYCLING FACILITY
70 SOUTH ALASKA STREET
SEATTLE, WASHINGTON 98134
TELEPHONE #: (206) 763-5025
MONDAY-FRIDAY 7:00AM-4:00PM

Disposal Facility:

COLUMBIA RIDGE LANDFILL AND
RECYCLING FACILITY
18177 CEDAR SPRINGS LANE
ARLINGTON, OREGON 97812
TELEPHONE: (541) 454-2030

Transporter Name:
R TRANSPORT

Truck #: R51

Waste Profile # 10259GWA

Waste Type: ADC

Expiration Date: 01/07/12

Rodney Rollins
Driver's Name (Please Print)

SIGNATURE

Remarks: 1/TYP (TWELVE) 15 cu YD.

WASTE MANAGEMENT

Alaska Street
70 S Alaska Street
Seattle, WA, 98134

Original
Ticket# 31777

Ph: 206 763 5025

Customer Name BOEING BOEING
Ticket Date 08/10/2011
Payment Type Credit Account
Manual Ticket#
Route AK
Hauling Ticket#
Destination
PO# 102596WA

Carrier R TRANSPORT R TRANSPORT
Vehicle# R53 Volume
Container
Driver JAMES GREENWOOD
Check#
Billing# 0000013
Grid

	Time	Scale	Operator	Inbound		
In	08/10/2011 07:50:28	SCALE 1	lmercer		Gross	104800 lb
Out	08/10/2011 07:50:28		lmercer		Tare	39760 lb
					Net	65040 lb
					Tons	32.52

Comments R TRANSP - LM (V2507)

	Product	LD%	Qty	UOM	Rate	Tax	Amount	Origin
1	Daily Cover-PCS-Tons-Pet	100	32.52	Tons				KING
2	GONDOLA 16.10/TN-GONDOLA	100	32.52	Tons				
3	LOCT$8.76W/32TON MIN-LOC	100	32.52	Tons				

Total Tax
Total Ticket

Driver's Signature

203WM

BILL OF LADING/SCALE TICKET

WASTE MANAGEMENT

BOEING # V2523 8/10/11 0700

Generators Name & Address:
BOEING CO - NORTH BOEING FIELD
7560 E. MARGINAL WAY S.
SEATTLE, WA. 98108

Billing: BOEING
Contact Person: JENNIFER PARSONS
Contact Number: (206) 715-7981
Fax Number:

Acknowledgement of Loading

Shannon Gooch
Name (Please Print)

Signature

BOEING CO./NORTH BOEING FIELD
Company

8-10-11
Date

Deliver To:

ALASKA RELOAD & RECYCLING FACILITY
70 SOUTH ALASKA STREET
SEATTLE, WASHINGTON 98134
TELEPHONE #: (206) 763-5025
MONDAY-FRIDAY 7:00AM-4:00PM

Disposal Facility:

COLUMBIA RIDGE LANDFILL AND
RECYCLING FACILITY
18177 CEDAR SPRINGS LANE
ARLINGTON, OREGON 97812
TELEPHONE: (541) 454-2030

Transporter Name: R TRANSPORT

Truck #: R53

Waste Profile # 1025960A

Waste Type: ADC

Expiration Date: 01/07/12

James Greenwood
Driver's Name (Please Print)

SIGNATURE

Remarks: 1-T+P (TURNS) 15 cu yd.

WASTE MANAGEMENT

Alaska Street
70 S Alaska Street
Seattle, WA, 98134

Original
Ticket# 31779

Ph: 206 763 5025

Customer Name BOEING BOEING
Ticket Date 08/10/2011
Payment Type Credit Account
Manual Ticket#
Route AK
Hauling Ticket#
Destination
PO# 102596WA

Carrier R TRANSPORT R TRANSPORT
Vehicle# R51 Volume
Container
Driver RODNEY ROLLINS
Check#
Billing# 0000013
Grid

	Time	Scale	Operator	Inbound		
In	08/10/2011 08:10:55	SCALE 1	lmercer		Gross	104820 lb
Out	08/10/2011 08:10:55		lmercer		Tare	40600 lb
					Net	64220 lb
					Tons	32.11

Comments R TRANSP - LM (V2507)

	Product	LD%	Qty	UOM	Rate	Tax	Amount	Origin
1	Daily Cover-PCS-Tons-Pet	100	32.11	Tons				KING
2	GONDOLA 16.10/TN-GONDOLA	100	32.11	Tons				
3	LOCT$8.76W/32TON MIN-LOC	100	32.11	Tons				

Total Tax
Total Ticket

203WM Driver's Signature

BILL OF LADING/SCALE TICKET

WASTE MANAGEMENT

BOEING # V2507 8/10/11 0700

Generators Name & Address:
BOEING CO - NORTH BOEING FIELD
7500 E. MARGINAL WAY S.
SEATTLE, WA. 98108

Billing: BOEING
Contact Person: JENNI / FER PARSONS
Contact Number: (206) 715-7981
Fax Number:

Acknowledgement of Loading

Shawn Cook
Name (Please Print)

Signature

BOEING CO. / NORTH BOEING FIELD
Company

8-10-11
Date

Deliver To:

ALASKA RELOAD & RECYCLING FACILITY
70 SOUTH ALASKA STREET
SEATTLE, WASHINGTON 98134
TELEPHONE #: (206) 763-5025
MONDAY-FRIDAY 7:00AM-4:00PM

Disposal Facility:

COLUMBIA RIDGE LANDFILL AND
RECYCLING FACILITY
18177 CEDAR SPRINGS LANE
ARLINGTON, OREGON 97812
TELEPHONE: (541) 454-2030

Transporter Name:
R TRANSPORT

Truck #: R51

Waste Profile # 10259bWA

Waste Type: ADC

Expiration Date: 01/07/12

Rodney Rollins
Driver's Name (Please Print)

SIGNATURE

Remarks: 1/T+P (TURNS) 15 DEY YD.

WASTE MANAGEMENT

Alaska Street
70 S Alaska Street
Seattle, WA, 98134

Original
Ticket# 31783

Ph: 206 763 5025

Customer Name BOEING BOEING
Ticket Date 08/10/2011
Payment Type Credit Account
Manual Ticket#
Route AK
Hauling Ticket#
Destination
PO# 102596WA

Carrier R TRANSPORT R TRANSPORT
Vehicle# R53 Volume
Container
Driver JAMES GREENWOOD
Check#
Billing# 0000013
Grid

	Time	Scale	Operator	Inbound		
In	08/10/2011 08:44:04	SCALE 1	lmercer		Gross	106860 lb
Out	08/10/2011 08:44:04		lmercer		Tare	39760 lb
					Net	67100 lb
					Tons	33.55

Comments R TRANSP - LM (V2507)

	Product	LD%	Qty	UOM	Rate	Tax	Amount	Origin
1	Daily Cover-PCS-Tons-Pet	100	33.55	Tons				KING
2	GONDOLA 16.10/TN-GONDOLA	100	33.55	Tons				
3	LOCT$8.76W/32TON MIN-LOC	100	33.55	Tons				

Total Tax
Total Ticket

203WM Driver's Signature

BILL OF LADING/SCALE TICKET

WASTE MANAGEMENT

BOEING # V2509 8/10/11 07:00

Generators Name & Address:
BOEING CO - NORTH BOEING FIELD
7500 E. MARGINAL WAY S.
SEATTLE, WA. 98108

Billing: BOEING
Contact Person: JENNIFER PARSONS
Contact Number: (206) 715-7981
Fax Number:

Acknowledgement of Loading

Shawn Gooch
Name (Please Print)

Signature

BOEING CO./NORTH BOEING FIELD
Company

8-10-11
Date

Deliver To:

ALASKA RELOAD & RECYCLING FACILITY
70 SOUTH ALASKA STREET
SEATTLE, WASHINGTON 98134
TELEPHONE #: (206) 763-5025
MONDAY-FRIDAY 7:00AM-4:00PM

Disposal Facility:

COLUMBIA RIDGE LANDFILL AND
RECYCLING FACILITY
18177 CEDAR SPRINGS LANE
ARLINGTON, OREGON 97812
TELEPHONE: (541) 454-2030

Transporter Name: R TRANSPORT

Truck #: R53

Waste Profile # 10259GWA

Waste Type: ADC

Expiration Date: 01/07/12

James Greenwood
Driver's Name (Please Print)

SIGNATURE

Remarks: 1-T+P (TURNS) 1500 LYB.

WASTE MANAGEMENT

Alaska Street
70 S Alaska Street
Seattle, WA, 98134

Original
Ticket# 31786

Ph: 206 763 5025

Customer Name BOEING BOEING
Ticket Date 08/10/2011
Payment Type Credit Account
Manual Ticket#
Route AK
Hauling Ticket#
Destination
PO# 102596WA

Carrier R TRANSPORT R TRANSPORT
Vehicle# R51 Volume
Container
Driver RODNEY ROLLINS
Check#
Billing# 0000013
Grid

	Time	Scale	Operator	Inbound		
In	08/10/2011 08:56:08	SCALE 1	lmercer		Gross	101600 lb
Out	08/10/2011 08:56:08		lmercer		Tare	40600 lb
					Net	61000 lb
					Tons	30.50

Comments R TRANSP - LM (V2507)

	Product	LD%	Qty	UOM	Rate	Tax	Amount	Origin
1	Daily Cover-PCS-Tons-Pet	100	30.50	Tons				KING
2	GONDOLA 16.10/TN-GONDOLA	100	30.50	Tons				
3	LOCT$8.76W/32TON MIN-LOC	100	30.50	Tons				

Total Tax
Total Ticket

203WM
Driver's Signature

BILL OF LADING/SCALE TICKET

WASTE MANAGEMENT

BOEING #V2507 8/10/11 0700

Generators Name & Address:
BOEING CO - NORTH BOEING FIELD
7500 E. MARGINAL WAY S.
SEATTLE, WA. 98108

Billing: BOEING
Contact Person: JENNIFER PARSONS
Contact Number: (206) 715-7981
Fax Number:

Acknowledgement of Loading

Shawn Cooper
Name (Please Print)

Signature

BOEING CO./NORTH BOEING FIELD
Company

8-10-11
Date

Deliver To:

ALASKA RELOAD & RECYCLING FACILITY
70 SOUTH ALASKA STREET
SEATTLE, WASHINGTON 98134
TELEPHONE #: (206) 763-5025
MONDAY-FRIDAY 7:00AM-4:00PM

Disposal Facility:

COLUMBIA RIDGE LANDFILL AND
RECYCLING FACILITY
18177 CEDAR SPRINGS LANE
ARLINGTON, OREGON 97812
TELEPHONE: (541) 454-2030

Transporter Name:
R TRANSPORT

Truck #: R51

Waste Profile # 102596WA

Waste Type: ADC

Expiration Date: 01/07/12

Rodney Rollins
Driver's Name (Please Print)

SIGNATURE

Remarks: 1 T+P (TURNS) 15 cy yd.

WASTE MANAGEMENT

Alaska Street
70 S Alaska Street
Seattle, WA, 98134

Reprint
Ticket# 31791

Ph: 206 763 5025

Customer Name BOEING BOEING
Ticket Date 08/10/2011
Payment Type Credit Account
Manual Ticket#
Route AK
Hauling Ticket#
Destination
PO# 102596WA

Carrier R TRANSPORT R TRANSPORT
Vehicle# R53 Volume
Container
Driver JAMES GREENWOOD
Check#
Billing# 0000013
Grid

	Time	Scale	Operator	Inbound		
In	08/10/2011 09:41:13	SCALE 1	lmercer		Gross	117800 lb
Out	08/10/2011 09:41:13		lmercer		Tare	39760 lb
					Net	78040 lb
					Tons	39.02

Comments R TRANSP - LM (V2507)

	Product	LD%	Qty	UOM	Rate	Tax	Amount	Origin
1	Daily Cover-PCS-Tons-Pet	100	39.02	Tons				KING
2	GONDOLA 16.10/TN-GONDOLA	100	39.02	Tons				KING
3	LOCT$8.76W/32TON MIN-LOC	100	39.02	Tons				KING

Total Tax
Total Ticket

203WM
Driver's Signature

BILL OF LADING/SCALE TICKET

WASTE MANAGEMENT

BOEING # V2507 8/10/11 0700

Generators Name & Address:
BOEING CO - NORTH BOEING FIELD
7500 E. MARGINAL WAY S.
SEATTLE, WA. 98108

Billing: BOEING
Contact Person: JENNIFER PARSONS
Contact Number: (206) 715-7981
Fax Number:

Acknowledgement of Loading

Name (Please Print)

Signature

BOEING CO. / NORTH BOEING FIELD
Company

8/10/2011
Date

Deliver To:

ALASKA RELOAD & RECYCLING FACILITY
70 SOUTH ALASKA STREET
SEATTLE, WASHINGTON 98134
TELEPHONE #: (206) 763-5025
MONDAY-FRIDAY 7:00AM-4:00PM

Disposal Facility:

COLUMBIA RIDGE LANDFILL AND
RECYCLING FACILITY
18177 CEDAR SPRINGS LANE
ARLINGTON, OREGON 97812
TELEPHONE: (541) 454-2030

Transporter Name: R TRANSPORT

Truck #: R53

Waste Profile # 10259GWA

Waste Type: ADC

Expiration Date: 01/07/12

James Greenwood
Driver's Name (Please Print)

SIGNATURE

Remarks: 1/T+P (TURNS) 1500 LYD.

WASTE MANAGEMENT

Alaska Street
70 S Alaska Street
Seattle, WA, 98134

Original
Ticket# 31793

Ph: 206 763 5025

Customer Name BOEING BOEING
Ticket Date 08/10/2011
Payment Type Credit Account
Manual Ticket#
Route AK
Hauling Ticket#
Destination
PO# 102596WA

Carrier R TRANSPORT R TRANSPORT
Vehicle# R51 Volume
Container
Driver RODNEY ROLLINS
Check#
Billing# 0000013
Grid

	Time	Scale	Operator	Inbound		
In	08/10/2011 09:51:43	SCALE 1	lmercer		Gross	104120 lb
Out	08/10/2011 09:51:43		lmercer		Tare	40600 lb
					Net	63520 lb
					Tons	31.76

Comments R TRANSP - LM (V2507)

	Product	LD%	Qty	UOM	Rate	Tax	Amount	Origin
1	Daily Cover-PCS-Tons-Pet	100	31.76	Tons				KING
2	GONDOLA 16.10/TN-GONDOLA	100	31.76	Tons				
3	LOCT$8.76W/32TON MIN-LOC	100	31.76	Tons				

Total Tax
Total Ticket

203WM Driver's Signature

BILL OF LADING/SCALE TICKET

WASTE MANAGEMENT

BOEING # V2507 8/10/11 0700

Generators Name & Address:
BOEING CO - NORTH BOEING FIELD
7540 E. MARGINAL WAY S.
SEATTLE, WA. 98108

Billing: BOEING
Contact Person: JENNIFER PARSONS
Contact Number: (206) 715-7981
Fax Number:

Acknowledgement of Loading

Shawn Cooch
Name (Please Print)

Signature

BOEING CO / NORTH BOEING FIELD
Company

8-10-11
Date

Deliver To:

ALASKA RELOAD & RECYCLING FACILITY
70 SOUTH ALASKA STREET
SEATTLE, WASHINGTON 98134
TELEPHONE #: (206) 763-5025
MONDAY-FRIDAY 7:00AM-4:00PM

Disposal Facility:

COLUMBIA RIDGE LANDFILL AND
RECYCLING FACILITY
18177 CEDAR SPRINGS LANE
ARLINGTON, OREGON 97812
TELEPHONE: (541) 454-2030

Transporter Name:
R TRANSPORT

Truck #: R51

Waste Profile # 102596WA

Waste Type: ADC

Expiration Date: 01/07/12

Rodney Rollins
Driver's Name (Please Print)

SIGNATURE

Remarks: 1/TYP (TWELVE) 15044 lb.

WASTE MANAGEMENT

Alaska Street
70 S Alaska Street
Seattle, WA, 98134

Original
Ticket# 31798

Ph: 206 763 5025

Customer Name BOEING BOEING
Ticket Date 08/10/2011
Payment Type Credit Account
Manual Ticket#
Route AK
Hauling Ticket#
Destination
PO# 102596WA

Carrier R TRANSPORT R TRANSPORT
Vehicle# R53 Volume
Container
Driver JAMES GREENWOOD
Check#
Billing# 0000013
Grid

	Time	Scale	Operator	Inbound		
In	08/10/2011 10:38:37	SCALE 1	lmercer		Gross	108380 lb
Out	08/10/2011 10:38:37		lmercer		Tare	39760 lb
					Net	68620 lb
					Tons	34.31

Comments R TRANSP - LM (V25Ø7)

	Product	LD%	Qty	UOM	Rate	Tax	Amount	Origin
1	Daily Cover-PCS-Tons-Pet	100	34.31	Tons				KING
2	GONDOLA 16.10/TN-GONDOLA	100	34.31	Tons				
3	LOCT$8.76W/32TON MIN-LOC	100	34.31	Tons				

Total Tax
Total Ticket

Driver's Signature

203WM

BILL OF LADING/SCALE TICKET

WASTE MANAGEMENT

BOEING # V2507 8/10/11 0700

Generators Name & Address:
BOEING CO - NORTH BOEING FIELD
7500 E. MARGINAL WAY S.
SEATTLE, WA. 98108

Billing: BOEING
Contact Person: JENNIFER PARSONS
Contact Number: (206) 715-7981
Fax Number:

Acknowledgement of Loading

Name (Please Print)

Signature

BOEING CO. / NORTH BOEING FIELD
Company

8/10/2011
Date

Deliver To:

ALASKA RELOAD & RECYCLING FACILITY
70 SOUTH ALASKA STREET
SEATTLE, WASHINGTON 98134
TELEPHONE #: (206) 763-5025
MONDAY-FRIDAY 7:00AM-4:00PM

Disposal Facility:

COLUMBIA RIDGE LANDFILL AND
RECYCLING FACILITY
18177 CEDAR SPRINGS LANE
ARLINGTON, OREGON 97812
TELEPHONE: (541) 454-2030

Transporter Name:
R TRANSPORT

Truck #: R53

Waste Profile # 10259WA

Waste Type: ADC

Expiration Date: 01/07/12

James Greenwood
Driver's Name (Please Print)

SIGNATURE

Remarks: 1/T+P (THRUS) 150cyYD.

WASTE MANAGEMENT

Alaska Street
70 S Alaska Street
Seattle, WA, 98134

Original
Ticket# 31800

Ph: 206 763 5025

Customer Name BOEING BOEING
Ticket Date 08/10/2011
Payment Type Credit Account
Manual Ticket#
Route AK
Hauling Ticket#
Destination
PO# 102596WA

Carrier R TRANSPORT R TRANSPORT
Vehicle# R51 Volume
Container
Driver RODNEY ROLLINS
Check#
Billing# 0000013
Grid

	Time	Scale	Operator	Inbound		
In	08/10/2011 10:52:32	SCALE 1	lmercer		Gross	93780 lb
Out	08/10/2011 10:52:32		lmercer		Tare	40600 lb
					Net	53180 lb
					Tons	26.59

Comments R TRANSP - LM (V2507)

	Product	LD%	Qty	UOM	Rate	Tax	Amount	Origin
1	Daily Cover-PCS-Tons-Pet	100	26.59	Tons				KING
2	GONDOLA 16.10/TN-GONDOLA	100	26.59	Tons				
3	LOCT$8.76W/32TON MIN-LOC	100	26.59	Tons				

Total Tax
Total Ticket

203WM
Driver's Signature

BILL OF LADING/SCALE TICKET

WASTE MANAGEMENT

BOEING # V2507 8/10/11 0700

Generators Name & Address:
BOEING CO - NORTH BOEING FIELD
7560 E. MARGINAL WAY S.
SEATTLE, WA. 98108

Billing: BOEING
Contact Person: JENNIFER PARSONS
Contact Number: (206) 715-7981
Fax Number:

Acknowledgement of Loading

DAVE OSKAMP
Name (Please Print)

Signature

BOEING CO. / NORTH BOEING FIELD
Company

8/10/2011
Date

Deliver To:

ALASKA RELOAD & RECYCLING FACILITY
70 SOUTH ALASKA STREET
SEATTLE, WASHINGTON 98134
TELEPHONE #: (206) 763-5025
MONDAY-FRIDAY 7:00AM-4:00PM

Disposal Facility:

COLUMBIA RIDGE LANDFILL AND
RECYCLING FACILITY
18177 CEDAR SPRINGS LANE
ARLINGTON, OREGON 97812
TELEPHONE: (541) 454-2030

Transporter Name: R TRANSPORT

Truck #: R51

Waste Profile # 10259GWA

Waste Type: ADC

Expiration Date: 01/07/12

Rodney Rollins
Driver's Name (Please Print)

SIGNATURE

Remarks: 1/7+P (TURLIS) 15 CY YD.

WASTE MANAGEMENT

Alaska Street
70 S Alaska Street
Seattle, WA, 98134

Reprint
Ticket# 32906

Ph: 206 763 5025

Customer Name BOEING BOEING
Ticket Date 09/30/2011
Payment Type Credit Account
Manual Ticket#
Route AK
Hauling Ticket#
Destination
PO# 102596WA

Carrier SELF HAULER *
Vehicle# H8
Volume
Container
Driver IRV PAULL
Check#
Billing# 0000013
Grid

	Time	Scale	Operator	Inbound
In	09/30/2011 07:56:18	SCALE 1	lmercer	
Out	09/30/2011 08:05:14	SCALE 1	lmercer	

Gross	109700 lb
Tare	41760 lb
Net	67940 lb
Tons	33.97

Comments HARLOW - LM (V3193)

	Product	LD%	Qty	UOM	Rate	Tax	Amount	Origin
1	Daily Cover-PCS-Tons-Pet	100	33.97	Tons				KING
2	GONDOLA 16.10/TN-GONDOLA	100	33.97	Tons				KING

Total Tax
Total Ticket

203WM
Driver's Signature

BILL OF LADING/SCALE TICKET

WASTE MANAGEMENT

BOEING # Y3193

Generators Name & Address: BLDG # 3-360
BOEING CO. - NORTH BOEING FIELD
7500 E. MARGINAL WAY S.
SEATTLE, WA. 98108

Billing: BOEING CO.
Contact Person: FRED WALLACE - JENNIFER PARSON
Contact Number: (206) 930-0461 - (206) 716-7981
Fax Number:

Acknowledgement of Loading

FRED WALLACE
Name (Please Print)

BOEING - NORTH FIELD
Company

Signature

9/30/11
Date

Deliver To:	Disposal Facility:
ALASKA RELOAD & RECYCLING FACILITY 70 SOUTH ALASKA STREET SEATTLE, WASHINGTON 98134 TELEPHONE #: (206) 763-5025 MONDAY-FRIDAY 7:00AM-4:00PM	COLUMBIA RIDGE LANDFILL AND RECYCLING FACILITY 18177 CEDAR SPRINGS LANE ARLINGTON, OREGON 97812 TELEPHONE: (541)-454-2030

Transporter Name: (SELF HAUL)

Waste Profile # 102596WA

Truck #: Harlow #8

Waste Type: ADC

Expiration Date: 01/07/12

IRV PAULL
Driver's Name (Please Print)

SIGNATURE

Remarks: DT / SELF HAUL (250 CY'S)

WASTE MANAGEMENT

Alaska Street
70 S Alaska Street
Seattle, WA, 98134

Reprint
Ticket# 32907

Ph: 206 763 5025

Customer Name BOEING BOEING
Ticket Date 09/30/2011
Payment Type Credit Account
Manual Ticket#
Route AK
Hauling Ticket#
Destination
PO# 102596WA

Carrier SELF HAULER *
Vehicle# H2
Volume
Container
Driver WILLIAM PLETCHER
Check#
Billing# 0000013
Grid

	Time	Scale	Operator	Inbound		
In	09/30/2011 07:59:57	SCALE 1	lmercer		Gross	113500 lb
Out	09/30/2011 08:10:24	SCALE 1	lmercer		Tare	41440 lb
					Net	72060 lb
					Tons	36.03

Comments HARLOW - LM (V3193)

	Product	LD%	Qty	UOM	Rate	Tax	Amount	Origin
1	Daily Cover-PCS-Tons-Pet	100	36.03	Tons				KING
2	GONDOLA 16.10/TN-GONDOLA	100	36.03	Tons				KING

Total Tax
Total Ticket

203WM

Driver's Signature

BILL OF LADING/SCALE TICKET

WASTE MANAGEMENT

BOEING # Y3193

Generators Name & Address: BLDG # 3-360
BOEING CO. - NORTH BOEING FIELD
7500 E. MARGINAL WAY S.
SEATTLE, WA. 98108

Billing: BOEING CO.
Contact Person: FRED WALLACE - JENNIFER PARSON
Contact Number: (206) 930-0461 - (206) 715-7981
Fax Number:

Acknowledgement of Loading

FRED WALLACE
Name (Please Print)

Signature

BOEING - NORTH FIELD
Company

9/30/11
Date

Deliver To:

ALASKA RELOAD & RECYCLING FACILITY
70 SOUTH ALASKA STREET
SEATTLE, WASHINGTON 98134
TELEPHONE #: (206) 763-5025
MONDAY-FRIDAY 7:00AM-4:00PM

Disposal Facility:

COLUMBIA RIDGE LANDFILL AND
RECYCLING FACILITY
18177 CEDAR SPRINGS LANE
ARLINGTON, OREGON 97812
TELEPHONE: (541) 454-2030

Transporter Name: (SELF HAUL)
HARLOW CONST.

Truck #: 42

Waste Profile # 102596WA

Waste Type: ADC

Expiration Date: 01/07/12

William Pletcher
Driver's Name (Please Print)

SIGNATURE

Remarks: DT / SELF HAUL (250 CY'S)

Reprint
Ticket# 32909

Alaska Street
70 S Alaska Street
Seattle, WA, 98134

Ph: 206 763 5025

BOEING BOEING
09/30/2011

Carrier SELF HAULER *
Vehicle# H8
Container
Driver IRV PAULL
Check#
Billing# 0000013
Grid

Volume

Type Credit Account
Manual Ticket#
Route AK
Hauling Ticket#
Destination
PO# 102596WA

	Time	Scale	Operator
In	09/30/2011 08:54:47	SCALE 1	lmercer
Out	09/30/2011 08:54:47		lmercer

Inbound

Gross	108120 lb
Tare	41760 lb
Net	66360 lb
Tons	33.18

Comments HARLOW - LM (V3193)

	Product	LD%	Qty	UOM	Rate	Tax	Amount	Origin
1	Daily Cover-PCS-Tons-Pet	100	33.18	Tons				KING
2	GONDOLA 16.10/TN-GONDOLA	100	33.18	Tons				

Total Tax
Total Ticket

BILL OF LADING/SCALE TICKET

WASTE MANAGEMENT

BOEING # Y3193

Generators Name & Address: BLDG # 3-360
BOEING CO. - NORTH BOEING FIELD
7500 E. MARGINAL WAY S.
SEATTLE, WA. 98108

Billing: BOEING CO.
Contact Person: FRED WALLACE - JENNIFER PARSON
Contact Number: (206) 930-0461 - (206) 715-7981
Fax Number:

Acknowledgement of Loading

FRED WALLACE
Name (Please Print)

BOEING - NORTH FIELD
Company

Signature

9/30/11
Date

Deliver To:	Disposal Facility:
ALASKA RELOAD & RECYCLING FACILITY 70 SOUTH ALASKA STREET SEATTLE, WASHINGTON 98134 TELEPHONE #: (206) 763-5025 MONDAY-FRIDAY 7:00AM-4:00PM	COLUMBIA RIDGE LANDFILL AND RECYCLING FACILITY 18177 CEDAR SPRINGS LANE ARLINGTON, OREGON 97812 TELEPHONE: (541) 454-2030
Transporter Name: (SELF HAUL)	Waste Profile # 102596WA
Truck #: Harlow #8	Waste Type: ADC Expiration Date: 01/07/12

TRY PAULL
Driver's Name (Please Print)

SIGNATURE

Remarks: DT / SELF HAUL (250 CY'S)

WASTE MANAGEMENT

Alaska Street
70 S Alaska Street
Seattle, WA, 98134

Reprint
Ticket# 32910

Ph: 206 763 5025

Customer Name BOEING BOEING
Ticket Date 09/30/2011
Payment Type Credit Account
Manual Ticket#
Route AK
Hauling Ticket#
Destination
PO# 102596WA

Carrier SELF HAULER *
Vehicle# H2 Volume
Container
Driver WILLIAM PLETCHER
Check#
Billing# 0000013
Grid

	Time	Scale	Operator	Inbound		
In	09/30/2011 09:00:45	SCALE 1	lmercer		Gross	111900 lb
Out	09/30/2011 09:00:45		lmercer		Tare	41440 lb
					Net	70460 lb
					Tons	35.23

Comments HARLOW - LM (V3193)

	Product	LD%	Qty	UOM	Rate	Tax	Amount	Origin
1	Daily Cover-PCS-Tons-Pet	100	35.23	Tons				KING
2	GONDOLA 16.10/TN-GONDOLA	100	35.23	Tons				

Total Tax
Total Ticket

203WM
Driver's Signature

BILL OF LADING/SCALE TICKET

WASTE MANAGEMENT

BOEING# Y3193

Generators Name & Address: BLDG#3-360
BOEING CO. - NORTH BOEING FIELD
7500 E. MARGINAL WAY S.
SEATTLE, WA. 98108

Billing: BOEING CO.
Contact Person: FRED WALLACE - JENNIFER PARSON
Contact Number: (206) 930-0461 - (206) 715-7981
Fax Number:

Acknowledgement of Loading

FRED WALLACE
Name (Please Print)

Signature

BOEING - NORTH FIELD
Company

9/30/11
Date

Deliver To:

ALASKA RELOAD & RECYCLING FACILITY
70 SOUTH ALASKA STREET
SEATTLE, WASHINGTON 98134
TELEPHONE #: (206) 763-5025
MONDAY-FRIDAY 7:00AM-4:00PM

Disposal Facility:

COLUMBIA RIDGE LANDFILL AND
RECYCLING FACILITY
18177 CEDAR SPRINGS LANE
ARLINGTON, OREGON 97812
TELEPHONE: (541) 454-2030

Transporter Name: (SELF HAUL)
HARLOW CONST.

Truck #: 42

Waste Profile # 102596WA

Waste Type: ADC

Expiration Date: 01/07/12

William Pletcher
Driver's Name (Please Print)

SIGNATURE

Remarks: DT / SELF HAUL (250 CY'S)

WASTE MANAGEMENT

Alaska Street
70 S Alaska Street
Seattle, WA, 98134

Reprint
Ticket# 32913

Ph: 206 763 5025

Customer Name BOEING BOEING
Ticket Date 09/30/2011
Payment Type Credit Account
Manual Ticket#
Route AK
Hauling Ticket#
Destination
PO# 102596WA

Carrier SELF HAULER *
Vehicle# H8
Volume
Container
Driver IRV PAULL
Check#
Billing# 0000013
Grid

	Time	Scale	Operator	Inbound		
In	09/30/2011 09:38:31	SCALE 1	lmercer		Gross	104460 lb
Out	09/30/2011 09:38:31		lmercer		Tare	41760 lb
					Net	62700 lb
					Tons	31.35

Comments HARLOW - LM (V3193)

	Product	LD%	Qty	UOM	Rate	Tax	Amount	Origin
1	Daily Cover-PCS-Tons-Pet	100	31.35	Tons				KING
2	GONDOLA 16.10/TN-GONDOLA	100	31.35	Tons				KING

Total Tax
Total Ticket

203WM
Driver's Signature

BILL OF LADING/SCALE TICKET

WASTE MANAGEMENT

BOEING # Y3193

Generators Name & Address: BLDG # 3-360
BOEING CO. - NORTH BOEING FIELD
7500 E. MARGINAL WAY S.
SEATTLE, WA. 98108

Billing: BOEING CO.
Contact Person: FRED WALLACE - JENNIFER PARSON
Contact Number: (206) 930-0461 - (206) 716-7981
Fax Number:

Acknowledgement of Loading

FRED WALLACE
Name (Please Print)

BOEING - NORTH FIELD
Company

Signature

9/30/11
Date

Deliver To:

ALASKA RELOAD & RECYCLING FACILITY
70 SOUTH ALASKA STREET
SEATTLE, WASHINGTON 98134
TELEPHONE #: (206) 763-5025
MONDAY-FRIDAY 7:00AM-4:00PM

Disposal Facility:

COLUMBIA RIDGE LANDFILL AND
RECYCLING FACILITY
18177 CEDAR SPRINGS LANE
ARLINGTON, OREGON 97812
TELEPHONE: (541) 454-2030

Transporter Name: (SELF HAUL)

Waste Profile # 102596WA

Truck #: Harlow #8

Waste Type: ADC

Expiration Date: 01/07/12

Driver's Name (Please Print)

SIGNATURE

Remarks: DT / SELF HAUL (250 CY'S)

WASTE MANAGEMENT

Alaska Street
70 S Alaska Street
Seattle, WA, 98134

Reprint
Ticket# 32914

Ph: 206 763 5025

Customer Name BOEING BOEING
Ticket Date 09/30/2011
Payment Type Credit Account
Manual Ticket#
Route AK
Hauling Ticket#
Destination
PO# 102596WA

Carrier SELF HAULER *
Vehicle# H2
Volume
Container
Driver WILLIAM PLETCHER
Check#
Billing# 0000013
Grid

	Time	Scale	Operator	Inbound		
In	09/30/2011 09:46:09	SCALE 1	lmercer		Gross	109160 lb
Out	09/30/2011 09:46:09		lmercer		Tare	41440 lb
					Net	67720 lb
					Tons	33.86

Comments HARLOW - LM (V3193)

	Product	LD%	Qty	UOM	Rate	Tax	Amount	Origin
1	Daily Cover-PCS-Tons-Pet	100	33.86	Tons				KING
2	GONDOLA 16.10/TN-GONDOLA	100	33.86	Tons				

Total Tax
Total Ticket

203WM Driver's Signature

BILL OF LADING/SCALE TICKET

WASTE MANAGEMENT

BOEING # Y3193

Generators Name & Address: BLDG # 3-360
BOEING CO. - NORTH BOEING FIELD
7500 E. MARGINAL WAY S.
SEATTLE, WA. 98108

Billing: BOEING CO.
Contact Person: FRED WALLACE - JENNIFER PARSON
Contact Number: (206) 930-0461 - (206) 715-7981
Fax Number:

Acknowledgement of Loading

FRED WALLACE
Name (Please Print)

Signature

BOEING - NORTH FIELD
Company

9/30/11
Date

Deliver To:

ALASKA RELOAD & RECYCLING FACILITY
70 SOUTH ALASKA STREET
SEATTLE, WASHINGTON 98134
TELEPHONE #: (206) 763-5025
MONDAY-FRIDAY 7:00AM-4:00PM

Disposal Facility:

COLUMBIA RIDGE LANDFILL AND
RECYCLING FACILITY
18177 CEDAR SPRINGS LANE
ARLINGTON, OREGON 97812
TELEPHONE: (541) 454-2030

Transporter Name: (SELF HAUL)
HARLOW CONST.

Truck #: 42

Waste Profile # 102596WA

Waste Type: ADC

Expiration Date: 01/07/12

William Pletcher
Driver's Name (Please Print)

SIGNATURE

Remarks: DT/SELF HAUL (250 CY'S)

WASTE MANAGEMENT

Alaska Street
70 S Alaska Street
Seattle, WA, 98134

Reprint
Ticket# 32916

Ph: 206 763 5025

Customer Name BOEING BOEING
Ticket Date 09/30/2011
Payment Type Credit Account
Manual Ticket#
Route AK
Hauling Ticket#
Destination
PO# 102596WA

Carrier SELF HAULER *
Vehicle# H8
Volume
Container
Driver IRV PAULL
Check#
Billing# 0000013
Grid

	Time	Scale	Operator	Inbound		
In	09/30/2011 10:20:41	SCALE 1	lmercer		Gross	107660 lb
Out	09/30/2011 10:20:41		lmercer		Tare	41760 lb
					Net	65900 lb
					Tons	32.95

Comments HARLOW - LM (V3193)

	Product	LD%	Qty	UOM	Rate	Tax	Amount	Origin
1	Daily Cover-PCS-Tons-Pet	100	32.95	Tons				KING
2	GONDOLA 16.10/TN-GONDOLA	100	32.95	Tons				

Total Tax
Total Ticket

203WM
Driver's Signature

BILL OF LADING/SCALE TICKET

WASTE MANAGEMENT

BOEING # Y3193

Generators Name & Address: BLDG # 3-360
BOEING CO. - NORTH BOEING FIELD
7500 E. MARGINAL WAY S.
SEATTLE, WA. 98108

Billing: BOEING CO.
Contact Person: FRED WALLACE - JENNIFER PARSON
Contact Number: (206) 930-0461 - (206) 715-7981
Fax Number:

Acknowledgement of Loading

FRED WALLACE
Name (Please Print)

BOEING - NORTH FIELD
Company

Signature

9/30/11
Date

Deliver To:

ALASKA RELOAD & RECYCLING FACILITY
70 SOUTH ALASKA STREET
SEATTLE, WASHINGTON 98134
TELEPHONE #: (206) 763-5025
MONDAY-FRIDAY 7:00AM-4:00PM

Disposal Facility:

COLUMBIA RIDGE LANDFILL AND
RECYCLING FACILITY
18177 CEDAR SPRINGS LANE
ARLINGTON, OREGON 97812
TELEPHONE: (541) 454-2030

Transporter Name: (SELF HAUL)

Waste Profile # 102596WA

Truck #: Harlow #8

Waste Type: ADC

Expiration Date: 01/07/12

TRV PAULL
Driver's Name (Please Print)

SIGNATURE

Remarks: DT / SELF HAUL (250 CY'S)

WASTE MANAGEMENT

Alaska Street
70 S Alaska Street
Seattle, WA, 98134

Reprint
Ticket# 32917

Ph: 206 763 5025

Customer Name BOEING BOEING
Ticket Date 09/30/2011
Payment Type Credit Account
Manual Ticket#
Route AK
Hauling Ticket#
Destination
PO# 102596WA

Carrier SELF HAULER *
Vehicle# H2
Volume
Container
Driver WILLIAM PLETCHER
Check#
Billing# 0000013
Grid

	Time	Scale	Operator	Inbound		
In	09/30/2011 10:31:41	SCALE 1	lmercer		Gross	99880 lb
Out	09/30/2011 10:31:41		lmercer		Tare	41440 lb
					Net	58440 lb
					Tons	29.22

Comments HARLOW - LM (V3193)

	Product	LD%	Qty	UOM	Rate	Tax	Amount	Origin
1	Daily Cover-PCS-Tons-Pet	100	29.22	Tons				KING
2	GONDOLA 16.10/TN-GONDOLA	100	29.22	Tons				

Total Tax
Total Ticket

203WM Driver's Signature

BILL OF LADING/SCALE TICKET

WASTE MANAGEMENT

BOEING # Y3193

Generators Name & Address: BLDG # 3-360
BOEING CO. - NORTH BOEING FIELD
7500 E. MARGINAL WAY S.
SEATTLE, WA. 98108

Billing: BOEING CO.
Contact Person: FRED WALLACE - JENNIFER PARSON
Contact Number: (206) 930-0461 - (206) 715-7981
Fax Number:

Acknowledgement of Loading

FRED WALLACE
Name (Please Print)

Signature

BOEING - NORTH FIELD
Company

9/30/11
Date

Deliver To:

ALASKA RELOAD & RECYCLING FACILITY
70 SOUTH ALASKA STREET
SEATTLE, WASHINGTON 98134
TELEPHONE #: (206) 763-5025
MONDAY-FRIDAY 7:00AM-4:00PM

Disposal Facility:

COLUMBIA RIDGE LANDFILL AND
RECYCLING FACILITY
18177 CEDAR SPRINGS LANE
ARLINGTON, OREGON 97812
TELEPHONE: (541) 454-2030

Transporter Name: (SELF HAUL)
HARLOW CONST.

Waste Profile # 102596WA

Truck #: 42

Waste Type: ADC

Expiration Date: 01/07/12

William Pletcher
Driver's Name (Please Print)

SIGNATURE

Remarks: DT / SELF HAUL (250 CY'S)

WASTE MANAGEMENT

Alaska Street
70 S Alaska Street
Seattle, WA, 98134

Reprint
Ticket# 32919

Ph: 206 763 5025

Customer Name BOEING BOEING
Ticket Date 09/30/2011
Payment Type Credit Account
Manual Ticket#
Route AK
Hauling Ticket#
Destination
PO# 102596WA

Carrier SELF HAULER *
Vehicle# H8
Volume
Container
Driver IRV PAULL
Check#
Billing# 0000013
Grid

	Time	Scale	Operator	Inbound		
In	09/30/2011 11:10:35	SCALE 1	lmercer		Gross	107940 lb
Out	09/30/2011 11:10:35		lmercer		Tare	41760 lb
					Net	66180 lb
					Tons	33.09

Comments HARLOW - LM (V3193)

	Product	LD%	Qty	UOM	Rate	Tax	Amount	Origin
1	Daily Cover-PCS-Tons-Pet	100	33.09	Tons				KING
2	GONDOLA 16.10/TN-GONDOLA	100	33.09	Tons				KING

Total Tax
Total Ticket

203WM
Driver's Signature

BILL OF LADING/SCALE TICKET

WASTE MANAGEMENT

BOEING # Y3193

Generators Name & Address: BLDG # 3-360
BOEING CO. - NORTH BOEING FIELD
7500 E. MARGINAL WAY S.
SEATTLE, WA. 98108

Billing: BOEING CO.
Contact Person: FRED WALLACE - JENNIFER PARSON
Contact Number: (206) 930-0461 - (206) 715-7981
Fax Number:

Acknowledgement of Loading

FRED WALLACE
Name (Please Print)

BOEING - NORTH FIELD
Company

Signature

9/30/11
Date

Deliver To:

ALASKA RELOAD & RECYCLING FACILITY
70 SOUTH ALASKA STREET
SEATTLE, WASHINGTON 98134
TELEPHONE #: (206) 763-5025
MONDAY-FRIDAY 7:00AM-4:00PM

Disposal Facility:

COLUMBIA RIDGE LANDFILL AND
RECYCLING FACILITY
18177 CEDAR SPRINGS LANE
ARLINGTON, OREGON 97812
TELEPHONE: (541)-454-2030

Transporter Name: (SELF HAUL)

Waste Profile # 102596WA

Truck #: Harlow #8

Waste Type: ADC

Expiration Date: 01/07/12

TRV PAULL
Driver's Name (Please Print)

SIGNATURE

Remarks: DT / SELF HAUL (250 CY'S)

Alaska Street
70 S Alaska Street
Seattle, WA, 98134

Reprint
Ticket# 32922

Ph: 206 763 5025

Customer Name BOEING BOEING
Ticket Date 09/30/2011
Payment Type Credit Account
Manual Ticket#
Route AK
Hauling Ticket#
Destination
PO# 102596WA

Carrier SELF HAULER *
Vehicle# H2
Volume
Container
Driver WILLIAM PLETCHER
Check#
Billing# 0000013
Grid

	Time	Scale	Operator	Inbound		
In	09/30/2011 11:29:17	SCALE 1	lmercer		Gross	102860 lb
Out	09/30/2011 11:29:17		lmercer		Tare	41440 lb
					Net	61420 lb
					Tons	30.71

Comments HARLOW YE

	Product	LD%	Qty	UOM	Rate	Tax	Amount	Origin
1	Daily Cover-PCS-Tons-Pet	100	30.71	Tons				KING
2	GONDOLA 16.10/TN-GONDOLA	100	30.71	Tons				KING

Total Tax
Total Ticket

203WM
Driver's Signature

BILL OF LADING/SCALE TICKET

WASTE MANAGEMENT

BOEING # Y3193

Generators Name & Address: BLDG # 3-360
BOEING CO. - NORTH BOEING FIELD
7500 E. MARGINAL WAY S.
SEATTLE, WA. 98108

Billing: BOEING CO.
Contact Person: FRED WALLACE - JENNIFER PARSON
Contact Number: (206) 930-0461 - (206) 716-7981
Fax Number:

Acknowledgement of Loading

FRED WALLACE
Name (Please Print)

BOEING - NORTH FIELD
Company

Signature

9/30/11
Date

Deliver To:

ALASKA RELOAD & RECYCLING FACILITY
70 SOUTH ALASKA STREET
SEATTLE, WASHINGTON 98134
TELEPHONE #: (206) 763-5025
MONDAY-FRIDAY 7:00AM-4:00PM

Disposal Facility:

COLUMBIA RIDGE LANDFILL AND
RECYCLING FACILITY
18177 CEDAR SPRINGS LANE
ARLINGTON, OREGON 97812
TELEPHONE: (541) 454-2030

Transporter Name: (SELF HAUL)
HARLOW CONST.

Waste Profile # 102596WA

Truck #: 42

Waste Type: ADC

Expiration Date: 01/07/12

William Pletcher
Driver's Name (Please Print)

SIGNATURE

Remarks: DT / SELF HAUL (250 CY'S)

WASTE MANAGEMENT

Alaska Street
70 S Alaska Street
Seattle, WA, 98134

Reprint
Ticket# 33170

Ph: 206 763 5025

Customer Name BOEING BOEING
Ticket Date 10/13/2011
Payment Type Credit Account
Manual Ticket#
Route AK
Hauling Ticket#
Destination
PO# 102596WA

Carrier SELF HAULER *
Vehicle# H137
Container
Driver IRV PAULL
Check#
Billing# 0000013
Grid

Volume

	Time	Scale	Operator	Inbound		
In	10/13/2011 07:55:53	SCALE 1	lmercer		Gross	100820 lb
Out	10/13/2011 08:04:00	SCALE 1	lmercer		Tare	41520 lb
					Net	59300 lb
					Tons	29.65

Comments HARLOW - LM (V3193)

	Product	LD%	Qty	UOM	Rate	Tax	Amount	Origin
1	Daily Cover-PCS-Tons-Pet	100	29.65	Tons				KING
2	GONDOLA 16.10/TN-GONDOLA	100	29.65	Tons				KING

Total Tax
Total Ticket

203 Driver's Signature

BILL OF LADING/SCALE TICKET

WASTE MANAGEMENT

BOEING # Y3193

Generators Name & Address: BLDG # 3-360
BOEING CO. - NORTH BOEING FIELD
7500 E. MARGINAL WAY S.
SEATTLE, WA. 98108

Billing: BOEING CO.
Contact Person: FRED WALLACE - JENNIFER PARSON
Contact Number: (206) 930-0461 - (206) 715-7981
Fax Number:

Acknowledgement of Loading

FRED WALLACE BOEING - NORTH FIELD
Name (Please Print) Company

Signature

10/13/11
Date

Deliver To:	Disposal Facility:
ALASKA RELOAD & RECYCLING FACILITY 70 SOUTH ALASKA STREET SEATTLE, WASHINGTON 98134 TELEPHONE #: (206) 763-5025 MONDAY-FRIDAY 7:00AM-4:00PM	COLUMBIA RIDGE LANDFILL AND RECYCLING FACILITY 18177 CEDAR SPRINGS LANE ARLINGTON, OREGON 97812 TELEPHONE: (541) 454-2030

Transporter Name: (SELF HAUL)
Harlow

Truck #: H13T

Waste Profile # 102596WA

Waste Type: ADC

Expiration Date: 01/07/12

IRV PAULL
Driver's Name (Please Print)

SIGNATURE

Remarks: DT/SELF HAUL (250 CYS)

WASTE MANAGEMENT

Alaska Street
70 S Alaska Street
Seattle, WA, 98134

Reprint
Ticket# 33171

Ph: 206 763 5025

Customer Name BOEING BOEING
Ticket Date 10/13/2011
Payment Type Credit Account
Manual Ticket#
Route AK
Hauling Ticket#
Destination
PO# 102596WA

Carrier SELF HAULER *
Vehicle# H24T
Volume
Container
Driver KEVIN NEWMILLER
Check#
Billing# 0000013
Grid

	Time	Scale	Operator	Inbound		
In	10/13/2011 07:58:54	SCALE 1	lmercer		Gross	107220 lb
Out	10/13/2011 08:05:58	SCALE 1	lmercer		Tare	41840 lb
					Net	65380 lb
					Tons	32.69

Comments HARLOW - LM (V3193)

	Product	LD%	Qty	UOM	Rate	Tax	Amount	Origin
1	Daily Cover-PCS-Tons-Pet	100	32.69	Tons				KING
2	GONDOLA 16.10/TN-GONDOLA	100	32.69	Tons				KING

Total Tax
Total Ticket

203 Driver's Signature

BILL OF LADING/SCALE TICKET

WASTE MANAGEMENT

BOEING # Y3193

Generators Name & Address: BLDG # 3-360
BOEING CO. - NORTH BOEING FIELD
7500 E. MARGINAL WAY S.
SEATTLE, WA. 98108

Billing: BOEING CO.
Contact Person: FRED WALLACE - JENNIFER PARSON
Contact Number: (206) 930-0461 - (206) 715-7981
Fax Number:

Acknowledgement of Loading

FRED WALLACE — BOEING - NORTH FIELD
Name (Please Print) — Company

Signature — 10/13/11
Date

Deliver To:

ALASKA RELOAD & RECYCLING FACILITY
70 SOUTH ALASKA STREET
SEATTLE, WASHINGTON 98134
TELEPHONE #: (206) 763-5025
MONDAY-FRIDAY 7:00AM-4:00PM

Disposal Facility:

COLUMBIA RIDGE LANDFILL AND
RECYCLING FACILITY
18177 CEDAR SPRINGS LANE
ARLINGTON, OREGON 97812
TELEPHONE: (541) 454-2030

Transporter Name: (SELF HAUL) Harlow

Truck #: H24T

Waste Profile # 102596WA

Waste Type: ADC

Expiration Date: 01/07/12

Kevin Newmiller
Driver's Name (Please Print)

SIGNATURE

Remarks: DT / SELF HAUL (250 CY'S)

WASTE MANAGEMENT

Alaska Street
70 S Alaska Street
Seattle, WA, 98134

Reprint
Ticket# 33174

Ph: 206 763 5025

Customer Name BOEING BOEING
Ticket Date 10/13/2011
Payment Type Credit Account
Manual Ticket#
Route AK
Hauling Ticket#
Destination
PO# 102596WA

Carrier SELF HAULER *
Vehicle# H24T
Container
Driver KEVIN NEWMILLER
Check#
Billing# 00000013
Grid

Volume

	Time	Scale	Operator	Inbound		
In	10/13/2011 08:46:42	SCALE 1	lmercer		Gross	97600 lb
Out	10/13/2011 08:46:42		lmercer		Tare	41840 lb
					Net	55760 lb
					Tons	27.88

Comments HARLOW - LM (V3193)

	Product	LD%	Qty	UOM	Rate	Tax	Amount	Origin
1	Daily Cover-PCS-Tons-Pet	100	27.88	Tons				
2	GONDOLA 16.10/TN-GONDOLA	100	27.88	Tons				KING

Total Tax
Total Ticket

203WM

Driver's Signature

BILL OF LADING/SCALE TICKET

WASTE MANAGEMENT

BOEING # Y3193

Generators Name & Address: BLDG # 3-360
BOEING CO. - NORTH BOEING FIELD
7500 E. MARGINAL WAY S.
SEATTLE, WA. 98108

Billing: BOEING CO.
Contact Person: FRED WALLACE - JENNIFER PARSON
Contact Number: (206) 930-0461 - (206) 715-7981
Fax Number:

Acknowledgement of Loading

FRED WALLACE — BOEING - NORTH FIELD
Name (Please Print) — Company

Signature — 10/13/11
Date

Deliver To:

ALASKA RELOAD & RECYCLING FACILITY
70 SOUTH ALASKA STREET
SEATTLE, WASHINGTON 98134
TELEPHONE #: (206) 763-5025
MONDAY-FRIDAY 7:00AM-4:00PM

Disposal Facility:

COLUMBIA RIDGE LANDFILL AND
RECYCLING FACILITY
18177 CEDAR SPRINGS LANE
ARLINGTON, OREGON 97812
TELEPHONE: (541) 454-2030

Transporter Name: (SELF HAUL) Harlow

Truck #: H24T

Waste Profile # 102596WA

Waste Type: ADC

Expiration Date: 01/07/12

Kevin Newmiller
Driver's Name (Please Print)

SIGNATURE

Remarks: DT/SELF HAUL (250 CY'S)

WASTE MANAGEMENT

Alaska Street
70 S Alaska Street
Seattle, WA, 98134

Reprint
Ticket# 33175

Ph: 206 763 5025

Customer Name BOEING BOEING
Ticket Date 10/13/2011
Payment Type Credit Account
Manual Ticket#
Route AK
Hauling Ticket#
Destination
PO# 102596WA

Carrier SELF HAULER *
Vehicle# H13T
Volume
Container
Driver IRV PAULL
Check#
Billing# 0000013
Grid

	Time	Scale	Operator	Inbound		
In	10/13/2011 08:50:15	SCALE 1	lmercer		Gross	100880 lb
Out	10/13/2011 08:50:15		lmercer		Tare	41520 lb
					Net	59360 lb
					Tons	29.68

Comments HARLOW - LM (V3193)

	Product	LD%	Qty	UOM	Rate	Tax	Amount	Origin
1	Daily Cover-PCS-Tons-Pet	100	29.68	Tons				KING
2	GONDOLA 16.10/TN-GONDOLA	100	29.68	Tons				

Total Tax
Total Ticket

203WM
Driver's Signature

BILL OF LADING/SCALE TICKET

WASTE MANAGEMENT

BOEING # Y3193

Generators Name & Address: BLDG # 3-360
BOEING CO. - NORTH BOEING FIELD
7500 E. MARGINAL WAY S.
SEATTLE, WA. 98108

Billing: BOEING CO.
Contact Person: FRED WALLACE - JENNIFER PARSON
Contact Number: (206) 930-0461 - (206) 715-7981
Fax Number:

Acknowledgement of Loading

FRED WALLACE — BOEING - NORTH FIELD
Name (Please Print)

Signature

10/13/11
Date

Deliver To:	Disposal Facility:
ALASKA RELOAD & RECYCLING FACILITY 70 SOUTH ALASKA STREET SEATTLE, WASHINGTON 98134 TELEPHONE #: (206) 763-5025 MONDAY-FRIDAY 7:00AM-4:00PM	COLUMBIA RIDGE LANDFILL AND RECYCLING FACILITY 18177 CEDAR SPRINGS LANE ARLINGTON, OREGON 97812 TELEPHONE: (541) 454-2030

Transporter Name: (SELF HAUL)
Harlow

Truck #: H13T

Waste Profile # 102596WA

Waste Type: ADC

Expiration Date: 01/07/12

IRV PAUL

Driver's Name (Please Print)

SIGNATURE

Remarks: DT/SELF HAUL (250 CY'S)

WASTE MANAGEMENT

Alaska Street
70 S Alaska Street
Seattle, WA, 98134

Reprint
Ticket# 33176

Ph: 206 763 5025

Customer Name BOEING BOEING
Ticket Date 10/13/2011
Payment Type Credit Account
Manual Ticket#
Route AK
Hauling Ticket#
Destination
PO# 102596WA

Carrier SELF HAULER *
Vehicle# H24T
Volume
Container
Driver KEVIN NEWMILLER
Check#
Billing# 0000013
Grid

	Time	Scale	Operator	Inbound		
In	10/13/2011 09:32:12	SCALE 1	lmercer		Gross	107700 lb
Out	10/13/2011 09:32:12		lmercer		Tare	41840 lb
					Net	65860 lb
					Tons	32.93

Comments HARLOW - LM (V3193)

	Product	LD%	Qty	UOM	Rate	Tax	Amount	Origin
1	Daily Cover-PCS-Tons-Pet	100	32.93	Tons				KING
2	GONDOLA 16.10/TN-GONDOLA	100	32.93	Tons				

Total Tax
Total Ticket

203WM Driver's Signature

BILL OF LADING/SCALE TICKET

WASTE MANAGEMENT

BOEING # Y3193

Generators Name & Address: BLDG # 3-360
BOEING CO. - NORTH BOEING FIELD
7500 E. MARGINAL WAY S.
SEATTLE, WA. 98108

Billing: BOEING CO.
Contact Person: FRED WALLACE - JENNIFER PARSON
Contact Number: (206) 930-0461 - (206) 715-7981
Fax Number:

Acknowledgement of Loading

FRED WALLACE — BOEING - NORTH FIELD
Name (Please Print) — Company

Signature — 10/13/11
Date

Deliver To:

ALASKA RELOAD & RECYCLING FACILITY
70 SOUTH ALASKA STREET
SEATTLE, WASHINGTON 98134
TELEPHONE #: (206) 763-5025
MONDAY-FRIDAY 7:00AM-4:00PM

Disposal Facility:

COLUMBIA RIDGE LANDFILL AND
RECYCLING FACILITY
18177 CEDAR SPRINGS LANE
ARLINGTON, OREGON 97812
TELEPHONE: (541) 454-2030

Transporter Name: (SELF HAUL) Harlow

Truck #: H24T

Waste Profile # 102596WA

Waste Type: ADC

Expiration Date: 01/07/12

Kevin Newmiller
Driver's Name (Please Print)

SIGNATURE

Remarks: DT / SELF HAUL (250 CY'S)

WASTE MANAGEMENT

Alaska Street
70 S Alaska Street
Seattle, WA, 98134

Reprint
Ticket# 33177

Ph: 206 763 5025

Customer Name BOEING BOEING
Ticket Date 10/13/2011
Payment Type Credit Account
Manual Ticket#
Route AK
Hauling Ticket#
Destination
PO# 102596WA

Carrier SELF HAULER *
Vehicle# H13T
Container
Driver IRV PAULL
Check#
Billing# 0000013
Grid

Volume

	Time	Scale	Operator	Inbound		
In	10/13/2011 09:48:42	SCALE 1	lmercer		Gross	114860 lb
Out	10/13/2011 09:48:42		lmercer		Tare	41520 lb
					Net	73340 lb
					Tons	36.67

Comments HARLOW - LM (V3193)

	Product	LD%	Qty	UOM	Rate	Tax	Amount	Origin
1	Daily Cover-PCS-Tons-Pet	100	36.67	Tons				KING
2	GONDOLA 16.10/TN-GONDOLA	100	36.67	Tons				

Total Tax
Total Ticket

203WM

Driver's Signature

BILL OF LADING/SCALE TICKET

WASTE MANAGEMENT

BOEING # Y3193

Generators Name & Address: BLDG # 3-360
BOEING CO. - NORTH BOEING FIELD
7500 E. MARGINAL WAY S.
SEATTLE, WA. 98108

Billing: BOEING CO.
Contact Person: FRED WALLACE - JENNIFER PARSON
Contact Number: (206) 930-0461 - (206) 715-7981
Fax Number:

Acknowledgement of Loading

FRED WALLACE BOEING - NORTH FIELD
Name (Please Print) Company

Signature

10/13/11
Date

Deliver To:	Disposal Facility:
ALASKA RELOAD & RECYCLING FACILITY 70 SOUTH ALASKA STREET SEATTLE, WASHINGTON 98134 TELEPHONE #: (206) 763-5025 MONDAY-FRIDAY 7:00AM-4:00PM	COLUMBIA RIDGE LANDFILL AND RECYCLING FACILITY 18177 CEDAR SPRINGS LANE ARLINGTON, OREGON 97812 TELEPHONE: (541) 454-2030

Transporter Name: (SELF HAUL)
Harlow

Truck #: H13T

Waste Profile # 102596WA

Waste Type: ADC

Expiration Date: 01/07/12

IRV PAUL

Driver's Name (Please Print)

SIGNATURE

Remarks: DT/SELF HAUL (250 CY'S)

WASTE MANAGEMENT

Alaska Street
70 S Alaska Street
Seattle, WA, 98134

Reprint
Ticket# 33180

Ph: 206 763 5025

Customer Name BOEING BOEING
Ticket Date 10/13/2011
Payment Type Credit Account
Manual Ticket#
Route AK
Hauling Ticket#
Destination
PO# 102596WA

Carrier SELF HAULER *
Vehicle# H24T
Volume
Container
Driver KEVIN NEWMILLER
Check#
Billing# 0000013
Grid

	Time	Scale	Operator	Inbound		
In	10/13/2011 10:22:44	SCALE 1	lmercer		Gross	112040 lb
Out	10/13/2011 10:22:44		lmercer		Tare	41840 lb
					Net	70200 lb
					Tons	35.10

Comments HARLOW - LM (V3193)

	Product	LD%	Qty	UOM	Rate	Tax	Amount	Origin
1	Daily Cover-PCS-Tons-Pet	100	35.10	Tons				KING
2	GONDOLA 16.10/TN-GONDOLA	100	35.10	Tons				

Total Tax
Total Ticket

203WM Driver's Signature

BILL OF LADING/SCALE TICKET

WASTE MANAGEMENT

BOEING # Y3193

Generators Name & Address: BLDG #3-360
BOEING CO. - NORTH BOEING FIELD
7500 E. MARGINAL WAY S.
SEATTLE, WA. 98108

Billing: BOEING CO.
Contact Person: FRED WALLACE - JENNIFER PARSON
Contact Number: (206) 930-0461 - (206) 716-7981
Fax Number:

Acknowledgement of Loading

FRED WALLACE — BOEING - NORTH FIELD
Name (Please Print) — Company

Signature — 10/13/11
Date

Deliver To:	Disposal Facility:
ALASKA RELOAD & RECYCLING FACILITY 70 SOUTH ALASKA STREET SEATTLE, WASHINGTON 98134 TELEPHONE #: (206) 763-5025 MONDAY-FRIDAY 7:00AM-4:00PM	COLUMBIA RIDGE LANDFILL AND RECYCLING FACILITY 18177 CEDAR SPRINGS LANE ARLINGTON, OREGON 97812 TELEPHONE: (541) 454-2030

Transporter Name: (SELF HAUL) Harlow

Truck #: H24T

Waste Profile # 102596WA

Waste Type: ADC

Expiration Date: 01/07/12

Kevin Newmiller
Driver's Name (Please Print)

SIGNATURE

Remarks: DT/SELF HAUL (250 CY'S)

WASTE MANAGEMENT

Alaska Street
70 S Alaska Street
Seattle, WA, 98134

Reprint
Ticket# 33181

Ph: 206 763 5025

Customer Name BOEING BOEING
Ticket Date 10/13/2011
Payment Type Credit Account
Manual Ticket#
Route AK
Hauling Ticket#
Destination
PO# 102596WA

Carrier SELF HAULER *
Vehicle# H13T
Volume
Container
Driver IRV PAUL
Check#
Billing# 0000013
Grid

	Time	Scale	Operator	Inbound		
In	10/13/2011 10:33:40	SCALE 1	lmercer		Gross	111020 lb
Out	10/13/2011 10:33:40		lmercer		Tare	41520 lb
					Net	69500 lb
					Tons	34.75

Comments HARLOW - LM (V3193)

	Product	LD%	Qty	UOM	Rate	Tax	Amount	Origin
1	Daily Cover-PCS-Tons-Pet	100	34.75	Tons				KING
2	GONDOLA 16.10/TN-GONDOLA	100	34.75	Tons				

Total Tax
Total Ticket

203WM Driver's Signature

BILL OF LADING/SCALE TICKET

WASTE MANAGEMENT

BOEING # Y3193

Generators Name & Address: BLDG # 3-360
BOEING CO. - NORTH BOEING FIELD
7500 E. MARGINAL WAY S.
SEATTLE, WA. 98108

Billing: BOEING CO.
Contact Person: FRED WALLACE - JENNIFER PARSON
Contact Number: (206) 430-0461 - (206) 715-7981
Fax Number:

Acknowledgement of Loading

FRED WALLACE BOEING - NORTH FIELD
Name (Please Print) Company

Signature

10/13/11
Date

Deliver To:	Disposal Facility:
ALASKA RELOAD & RECYCLING FACILITY 70 SOUTH ALASKA STREET SEATTLE, WASHINGTON 98134 TELEPHONE #: (206) 763-5025 MONDAY-FRIDAY 7:00AM-4:00PM	COLUMBIA RIDGE LANDFILL AND RECYCLING FACILITY 18177 CEDAR SPRINGS LANE ARLINGTON, OREGON 97812 TELEPHONE: (541) 454-2030

Transporter Name: (SELF HAUL)
Harlow

Truck #: H13T

Waste Profile # 102596WA

Waste Type: ADC

Expiration Date: 01/07/12

IRV PAULL
Driver's Name (Please Print)

SIGNATURE

Remarks: DT/SELF HAUL (250 CY'S)

WASTE MANAGEMENT

Alaska Street
70 S Alaska Street
Seattle, WA, 98134

Reprint
Ticket# 33183
Ph: 206 763 5025

Customer Name BOEING BOEING
Ticket Date 10/13/2011
Payment Type Credit Account
Manual Ticket#
Route AK
Hauling Ticket#
Destination
PO# 102596WA

Carrier SELF HAULER *
Vehicle# H24T
Volume
Container
Driver KEVIN NEWMILLER
Check#
Billing# 0000013
Grid

	Time	Scale	Operator	Inbound		
In	10/13/2011 11:09:33	SCALE 1	lmercer		Gross	113060 lb
Out	10/13/2011 11:09:33		lmercer		Tare	41840 lb
					Net	71220 lb
					Tons	35.61

Comments HARLOW - LM (V3193)

	Product	LD%	Qty	UOM	Rate	Tax	Amount	Origin
1	Daily Cover-PCS-Tons-Pet	100	35.61	Tons				KING
2	GONDOLA 16.10/TN-GONDOLA	100	35.61	Tons				

Total Tax
Total Ticket

203WM Driver's Signature

BILL OF LADING/SCALE TICKET

WASTE MANAGEMENT

BOEING # Y3193

Generators Name & Address: BLDG #3-360
BOEING CO. - NORTH BOEING FIELD
7500 E. MARGINAL WAY S.
SEATTLE, WA. 98108

Billing: BOEING CO.
Contact Person: FRED WALLACE - JENNIFER PARSON
Contact Number: (206) 930-0461 - (206) 715-7981
Fax Number:

Acknowledgement of Loading

FRED WALLACE — BOEING - NORTH FIELD
Name (Please Print) — Company

Signature — 10/13/11
Date

Deliver To:

ALASKA RELOAD & RECYCLING FACILITY
70 SOUTH ALASKA STREET
SEATTLE, WASHINGTON 98134
TELEPHONE #: (206) 763-5025
MONDAY-FRIDAY 7:00AM-4:00PM

Disposal Facility:

COLUMBIA RIDGE LANDFILL AND
RECYCLING FACILITY
18177 CEDAR SPRINGS LANE
ARLINGTON, OREGON 97812
TELEPHONE: (541) 454-2030

Transporter Name: (SELF HAUL) Harlow

Truck #: H24T

Waste Profile # 102596WA

Waste Type: ADC

Expiration Date: 01/07/12

Kevin Newmiller
Driver's Name (Please Print)

SIGNATURE

Remarks: DT/SELF HAUL (250 CY'S)

WASTE MANAGEMENT

Alaska Street
70 S Alaska Street
Seattle, WA, 98134

Reprint
Ticket# 33184

Ph: 206 763 5025

Customer Name BOEING BOEING
Ticket Date 10/13/2011
Payment Type Credit Account
Manual Ticket#
Route AK
Hauling Ticket#
Destination
PO# 102596WA

Carrier SELF HAULER *
Vehicle# H13T
Container
Driver IRV PAULL
Check#
Billing# 0000013
Grid

Volume

	Time	Scale	Operator	Inbound		
In	10/13/2011 11:41:15	SCALE 1	lmercer		Gross	113100 lb
Out	10/13/2011 11:41:15		lmercer		Tare	41520 lb
					Net	71580 lb
					Tons	35.79

Comments HARLOW MANIFEST V3193
YE

	Product	LD%	Qty	UOM	Rate	Tax	Amount	Origin
1	Daily Cover-PCS-Tons-Pet	100	35.79	Tons				KING
2	GONDOLA 16.10/TN-GONDOLA	100	35.79	Tons				

Total Tax
Total Ticket

203WM
Driver's Signature

BILL OF LADING/SCALE TICKET

WASTE MANAGEMENT

BOEING # Y3193

Generators Name & Address: BLDG # 3-360
BOEING CO. - NORTH BOEING FIELD
7500 E. MARGINAL WAY S.
SEATTLE, WA. 98108

Billing: BOEING CO.
Contact Person: FRED WALLACE - JENNIFER PARSON
Contact Number: (206) 930-0461 - (206) 715-7981
Fax Number:

Acknowledgement of Loading

FRED WALLACE BOEING - NORTH FIELD
Name (Please Print) Company

Signature 10/13/11
Date

Deliver To:	Disposal Facility:
ALASKA RELOAD & RECYCLING FACILITY 70 SOUTH ALASKA STREET SEATTLE, WASHINGTON 98134 TELEPHONE #: (206) 763-5025 MONDAY-FRIDAY 7:00AM-4:00PM	COLUMBIA RIDGE LANDFILL AND RECYCLING FACILITY 18177 CEDAR SPRINGS LANE ARLINGTON, OREGON 97812 TELEPHONE: (541) 454-2030

Transporter Name: (SELF HAUL)
Harlow

Truck #: H13T

Waste Profile # 102596WA

Waste Type: ADC

Expiration Date: 01/07/12

IRV PAULL
Driver's Name (Please Print)

Irv Paull
SIGNATURE

Remarks: DT/SELF HAUL (250 CYS)

WASTE MANAGEMENT

Alaska Street
70 S Alaska Street
Seattle, WA, 98134

Reprint
Ticket# 33187

Ph: 206 763 5025

Customer Name BOEING BOEING
Ticket Date 10/13/2011
Payment Type Credit Account
Manual Ticket#
Route AK
Hauling Ticket#
Destination
PO# 102596WA

Carrier SELF HAULER *
Vehicle# H24T
Volume
Container
Driver KEVIN NEWMILLER
Check#
Billing# 0000013
Grid

	Time	Scale	Operator	Inbound		
In	10/13/2011 11:53:22	SCALE 1	lmercer		Gross	107360 lb
Out	10/13/2011 11:53:22		lmercer		Tare	41840 lb
					Net	65520 lb
					Tons	32.76

Comments HARLOW - LM (V3193)

	Product	LD%	Qty	UOM	Rate	Tax	Amount	Origin
1	Daily Cover-PCS-Tons-Pet	100	32.76	Tons				KING
2	GONDOLA 16.10/TN-GONDOLA	100	32.76	Tons				

Total Tax
Total Ticket

203 Driver's Signature

BILL OF LADING/SCALE TICKET

WASTE MANAGEMENT

BOEING # Y3193

Generators Name & Address: BLDG # 3-360
BOEING CO. - NORTH BOEING FIELD
7500 E. MARGINAL WAY S.
SEATTLE, WA. 98108

Billing: BOEING CO.
Contact Person: FRED WALLACE - JENNIFER PARSON
Contact Number: (206) 430-0461 - (206) 715-7981
Fax Number:

Acknowledgement of Loading

FRED WALLACE — BOEING - NORTH FIELD
Name (Please Print) — Company

Signature — 10/13/11
Date

Deliver To:

ALASKA RELOAD & RECYCLING FACILITY
70 SOUTH ALASKA STREET
SEATTLE, WASHINGTON 98134
TELEPHONE #: (206) 763-5025
MONDAY-FRIDAY 7:00AM-4:00PM

Disposal Facility:

COLUMBIA RIDGE LANDFILL AND
RECYCLING FACILITY
18177 CEDAR SPRINGS LANE
ARLINGTON, OREGON 97812
TELEPHONE: (541) 454-2030

Transporter Name: (SELF HAUL) Harlow

Truck #: H24T

Waste Profile # 102596WA

Waste Type: ADC

Expiration Date: 01/07/12

Kevin Newmiller
Driver's Name (Please Print)

SIGNATURE

Remarks: DT / SELF HAUL (250 CYS)

WASTE MANAGEMENT

Alaska Street
70 S Alaska Street
Seattle, WA, 98134

Reprint
Ticket# 33188

Ph: 206 763 5025

Customer Name BOEING BOEING
Ticket Date 10/13/2011
Payment Type Credit Account
Manual Ticket#
Route AK
Hauling Ticket#
Destination
PO# 102596WA

Carrier SELF HAULER *
Vehicle# H13T
Container
Driver IRV PAULL
Check#
Billing# 0000013
Grid

Volume

	Time	Scale	Operator	Inbound		
In	10/13/2011 12:28:23	SCALE 1	lmercer		Gross	112540 lb
Out	10/13/2011 12:28:23		lmercer		Tare	41520 lb
					Net	71020 lb
					Tons	35.51

Comments HARLOW - LM (V3193)

	Product	LD%	Qty	UOM	Rate	Tax	Amount	Origin
1	Daily Cover-PCS-Tons-Pet	100	35.51	Tons				KING
2	GONDOLA 16.10/TN-GONDOLA	100	35.51	Tons				

Total Tax
Total Ticket

203WM Driver's Signature

BILL OF LADING/SCALE TICKET

WASTE MANAGEMENT

BOEING # Y3193

Generators Name & Address: BLDG # 3-360
BOEING CO. - NORTH BOEING FIELD
7500 E. MARGINAL WAY S.
SEATTLE, WA. 98108

Billing: BOEING CO.
Contact Person: FRED WALLACE - JENNIFER PARSON
Contact Number: (206) 930-0461 - (206) 715-7981
Fax Number:

Acknowledgement of Loading

FRED WALLACE BOEING - NORTH FIELD
Name (Please Print) Company

Signature

10/13/11
Date

Deliver To:

ALASKA RELOAD & RECYCLING FACILITY
70 SOUTH ALASKA STREET
SEATTLE, WASHINGTON 98134
TELEPHONE #: (206) 763-5025
MONDAY-FRIDAY 7:00AM-4:00PM

Disposal Facility:

COLUMBIA RIDGE LANDFILL AND
RECYCLING FACILITY
18177 CEDAR SPRINGS LANE
ARLINGTON, OREGON 97812
TELEPHONE: (541) 454-2030

Transporter Name: (SELF HAUL)

Harlow

Truck #: H13T

Waste Profile # 102596WA

Waste Type: ADC

Expiration Date: 01/07/12

IRV PAUL

Driver's Name (Please Print)

SIGNATURE

Remarks: DT/SELF HAUL (250 CY'S)

WASTE MANAGEMENT

Alaska Street
70 S Alaska Street
Seattle, WA, 98134

Reprint
Ticket# 33189

Ph: 206 763 5025

Customer Name BOEING BOEING
Ticket Date 10/13/2011
Payment Type Credit Account
Manual Ticket#
Route AK
Hauling Ticket#
Destination
PO# 102596WA

Carrier SELF HAULER *
Vehicle# H24T
Volume
Container
Driver KEVIN NEWMILLER
Check#
Billing# 0000013
Grid

	Time	Scale	Operator	Inbound		
In	10/13/2011 12:49:17	SCALE 1	lmercer		Gross	107540 lb
Out	10/13/2011 12:49:17		lmercer		Tare	41840 lb
					Net	65700 lb
					Tons	32.85

Comments HARLOW - LM (V3193)

	Product	LD%	Qty	UOM	Rate	Tax	Amount	Origin
1	Daily Cover-PCS-Tons-Pet	100	32.85	Tons				KING
2	GONDOLA 16.10/TN-GONDOLA	100	32.85	Tons				

Total Tax
Total Ticket

203 Driver's Signature

BILL OF LADING/SCALE TICKET

WASTE MANAGEMENT

BOEING # Y3193

Generators Name & Address: BLDG # 3-360
BOEING CO. - NORTH BOEING FIELD
7500 E. MARGINAL WAY S.
SEATTLE, WA. 98108

Billing: BOEING CO.
Contact Person: FRED WALLACE - JENNIFER PARSON
Contact Number: (206) 930-0461 - (206) 715-7981
Fax Number:

Acknowledgement of Loading

FRED WALLACE — BOEING - NORTH FIELD
Name (Please Print) — Company

Signature — 10/13/11
Date

Deliver To:

ALASKA RELOAD & RECYCLING FACILITY
70 SOUTH ALASKA STREET
SEATTLE, WASHINGTON 98134
TELEPHONE #: (206) 763-5025
MONDAY-FRIDAY 7:00AM-4:00PM

Disposal Facility:

COLUMBIA RIDGE LANDFILL AND
RECYCLING FACILITY
18177 CEDAR SPRINGS LANE
ARLINGTON, OREGON 97812
TELEPHONE: (541) 454-2030

Transporter Name: (SELF HAUL)
Harlow

Truck #: H24T

Waste Profile # 102596WA

Waste Type: ADC

Expiration Date: 01/07/12

Kevin Newmiller
Driver's Name (Please Print)

SIGNATURE

Remarks: DT / SELF HAUL (250 CY'S)

WASTE MANAGEMENT

Alaska Street
70 S Alaska Street
Seattle, WA, 98134

Reprint
Ticket# 33192

Ph: 206 763 5025

Customer Name BOEING BOEING
Ticket Date 10/13/2011
Payment Type Credit Account
Manual Ticket#
Route AK
Hauling Ticket#
Destination
PO# 102596WA

Carrier SELF HAULER *
Vehicle# H13T
Container
Driver IRV PAULO 2
Check#
Billing# 0000013
Grid

Volume

	Time	Scale	Operator	Inbound		
In	10/13/2011 13:28:19	SCALE 1	lmercer		Gross	115560 lb
Out	10/13/2011 13:28:19		lmercer		Tare	41520 lb
					Net	74040 lb
					Tons	37.02

Comments HARLOW - LM (V3193)

	Product	LD%	Qty	UOM	Rate	Tax	Amount	Origin
1	Daily Cover-PCS-Tons-Pet	100	37.02	Tons				KING
2	GONDOLA 16.10/TN-GONDOLA	100	37.02	Tons				

Total Tax
Total Ticket

203 Driver's Signature

BILL OF LADING/SCALE TICKET

WASTE MANAGEMENT

BOEING # Y3193

Generators Name & Address: BLDG # 3-360
BOEING CO. - NORTH BOEING FIELD
7500 E. MARGINAL WAY S.
SEATTLE, WA. 98108

Billing: BOEING CO.
Contact Person: FRED WALLACE - JENNIFER PARSON
Contact Number: (206) 930-0461 - (206) 715-7981
Fax Number:

Acknowledgement of Loading

FRED WALLACE BOEING - NORTH FIELD
Name (Please Print) Company

Signature 10/13/11
Date

Deliver To:	Disposal Facility:
ALASKA RELOAD & RECYCLING FACILITY 70 SOUTH ALASKA STREET SEATTLE, WASHINGTON 98134 TELEPHONE #: (206) 763-5025 MONDAY-FRIDAY 7:00AM-4:00PM	COLUMBIA RIDGE LANDFILL AND RECYCLING FACILITY 18177 CEDAR SPRINGS LANE ARLINGTON, OREGON 97812 TELEPHONE: (541) 454-2030
Transporter Name: (SELF HAUL) Harlow Truck #: H13T	Waste Profile # 102596WA Waste Type: ADC Expiration Date: 01/07/12

IRV PAUL

Driver's Name (Please Print)

SIGNATURE

Remarks: DT/SELF HAUL (250 CYS)

WASTE MANAGEMENT

Alaska Street
70 S Alaska Street
Seattle, WA, 98134

Reprint
Ticket# 33195

Ph: 206 763 5025

Customer Name BOEING BOEING
Ticket Date 10/13/2011
Payment Type Credit Account
Manual Ticket#
Route AK
Hauling Ticket#
Destination
PO# 102596WA

Carrier SELF HAULER *
Vehicle# H24T
Volume
Container
Driver KEVIN NEWMILLER
Check#
Billing# 0000013
Grid

	Time	Scale	Operator	Inbound		
In	10/13/2011 13:42:56	SCALE 1	lmercer		Gross	113180 lb
Out	10/13/2011 13:42:56		lmercer		Tare	41840 lb
					Net	71340 lb
					Tons	35.67

Comments HARLOW - LM (V3193)

	Product	LD%	Qty	UOM	Rate	Tax	Amount	Origin
1	Daily Cover-PCS-Tons-Pet	100	35.67	Tons				KING
2	GONDOLA 16.10/TN-GONDOLA	100	35.67	Tons				

Total Tax
Total Ticket

Driver's Signature

BILL OF LADING/SCALE TICKET

WASTE MANAGEMENT

BOEING # Y3193

Generators Name & Address: BLDG # 3-360
BOEING CO. - NORTH BOEING FIELD
7500 E. MARGINAL WAY S.
SEATTLE, WA. 98108

Billing: BOEING CO.
Contact Person: FRED WALLACE - JENNIFER PARSON
Contact Number: (206) 430-0461 - (206) 715-7981
Fax Number:

Acknowledgement of Loading

FRED WALLACE — BOEING - NORTH FIELD
Name (Please Print) — Company

Signature — 10/13/11
Date

Deliver To:

ALASKA RELOAD & RECYCLING FACILITY
70 SOUTH ALASKA STREET
SEATTLE, WASHINGTON 98134
TELEPHONE #: (206) 763-5025
MONDAY-FRIDAY 7:00AM-4:00PM

Disposal Facility:

COLUMBIA RIDGE LANDFILL AND
RECYCLING FACILITY
18177 CEDAR SPRINGS LANE
ARLINGTON, OREGON 97812
TELEPHONE: (541) 454-2030

Transporter Name: (SELF HAUL)
Harlow

Truck #: H24T

Waste Profile # 102596WA

Waste Type: ADC

Expiration Date: 01/07/12

Kevin Newmiller
Driver's Name (Please Print)

SIGNATURE

Remarks: DT / SELF HAUL (250 CYS)

WASTE MANAGEMENT

Alaska Street
70 S Alaska Street
Seattle, WA, 98134

Reprint
Ticket# 33196

Ph: 206 763 5025

Customer Name BOEING BOEING
Ticket Date 10/13/2011
Payment Type Credit Account
Manual Ticket#
Route AK
Hauling Ticket#
Destination
PO# 102596WA

Carrier SELF HAULER *
Vehicle# H13T
Volume
Container
Driver IRV PAULL
Check#
Billing# 0000013
Grid

	Time	Scale	Operator	Inbound		
In	10/13/2011 14:11:58	SCALE 1	lmercer		Gross	110760 lb
Out	10/13/2011 14:11:58		lmercer		Tare	41520 lb
					Net	69240 lb
					Tons	34.62

Comments HARLOW - LM (V3193)

	Product	LD%	Qty	UOM	Rate	Tax	Amount	Origin
1	Daily Cover-PCS-Tons-Pet	100	34.62	Tons				KING
2	GONDOLA 16.10/TN-GONDOLA	100	34.62	Tons				

Total Tax
Total Ticket

203 Driver's Signature

BILL OF LADING/SCALE TICKET

WASTE MANAGEMENT

BOEING # Y3193

Generators Name & Address: BLDG # 3-360
BOEING CO. - NORTH BOEING FIELD
7500 E. MARGINAL WAY S.
SEATTLE, WA. 98108

Billing: BOEING CO.
Contact Person: FRED WALLACE - JENNIFER PARSON
Contact Number: (206) 930-0461 - (206) 715-7981
Fax Number:

Acknowledgement of Loading

FRED WALLACE BOEING - NORTH FIELD
Name (Please Print) Company

Signature 10/13/11
Date

Deliver To:	Disposal Facility:
ALASKA RELOAD & RECYCLING FACILITY 70 SOUTH ALASKA STREET SEATTLE, WASHINGTON 98134 TELEPHONE #: (206) 763-5025 MONDAY-FRIDAY 7:00AM-4:00PM	COLUMBIA RIDGE LANDFILL AND RECYCLING FACILITY 18177 CEDAR SPRINGS LANE ARLINGTON, OREGON 97812 TELEPHONE: (541) 454-2030

Transporter Name: (SELF HAUL)
Harlow

Truck #: H13T

Waste Profile # 102596WA

Waste Type: ADC

Expiration Date: 01/07/12

IRV PAULL
Driver's Name (Please Print)

SIGNATURE

Remarks: DT / SELF HAUL (250 CYS)

WASTE MANAGEMENT

Alaska Street
70 S Alaska Street
Seattle, WA, 98134

Reprint
Ticket# 33199

Ph: 206 763 5025

Customer Name BOEING BOEING
Ticket Date 10/13/2011
Payment Type Credit Account
Manual Ticket#
Route AK
Hauling Ticket#
Destination
PO# 102596WA

Carrier SELF HAULER *
Vehicle# H24T
Volume
Container
Driver KEVIN NEWMILLER
Check#
Billing# 0000013
Grid

	Time	Scale	Operator	Inbound		
In	10/13/2011 14:19:57	SCALE 1	lmercer		Gross	112620 lb
Out	10/13/2011 14:19:57		lmercer		Tare	41840 lb
					Net	70780 lb
					Tons	35.39

Comments HARLOW - LM (V3193)

	Product	LD%	Qty	UOM	Rate	Tax	Amount	Origin
1	Daily Cover-PCS-Tons-Pet	100	35.39	Tons				KING
2	GONDOLA 16.10/TN-GONDOLA	100	35.39	Tons				

Total Tax
Total Ticket

203 Driver's Signature

BILL OF LADING/SCALE TICKET

WASTE MANAGEMENT

BOEING # Y3193

Generators Name & Address: BLDG # 3-360
BOEING CO. - NORTH BOEING FIELD
7500 E. MARGINAL WAY S.
SEATTLE, WA. 98108

Billing: BOEING CO.
Contact Person: FRED WALLACE - JENNIFER PARSON
Contact Number: (206) 930-0461 - (206) 715-7981
Fax Number:

Acknowledgement of Loading

FRED WALLACE — BOEING - NORTH FIELD
Name (Please Print) — Company

Signature — 10/13/11
Date

Deliver To:

ALASKA RELOAD & RECYCLING FACILITY
70 SOUTH ALASKA STREET
SEATTLE, WASHINGTON 98134
TELEPHONE #: (206) 763-5025
MONDAY-FRIDAY 7:00AM-4:00PM

Disposal Facility:

COLUMBIA RIDGE LANDFILL AND
RECYCLING FACILITY
18177 CEDAR SPRINGS LANE
ARLINGTON, OREGON 97812
TELEPHONE: (541) 454-2030

Transporter Name: (SELF HAUL)
Harlow

Truck #: H24T

Waste Profile # 102596WA

Waste Type: ADC

Expiration Date: 01/07/12

Kevin Newmiller
Driver's Name (Please Print)

SIGNATURE

Remarks: DT / SELF HAUL (250 CY'S)

WASTE MANAGEMENT

Alaska Street
70 S Alaska Street
Seattle, WA, 98134

Reprint
Ticket# 33201

Ph: 206 763 5025

Customer Name BOEING BOEING
Ticket Date 10/13/2011
Payment Type Credit Account
Manual Ticket#
Route AK
Hauling Ticket#
Destination -
PO# 102596WA

Carrier SELF HAULER *
Vehicle# H13T
Volume
Container
Driver IRV PAULL
Check#
Billing# 0000013
Grid

	Time	Scale	Operator	Inbound		
In	10/13/2011 14:48:51	SCALE 1	lmercer		Gross	113320 lb
Out	10/13/2011 14:48:51		lmercer		Tare	41520 lb
					Net	71800 lb
					Tons	35.90

Comments HARLOW - LM (V3193)

	Product	LD%	Qty	UOM	Rate	Tax	Amount	Origin
1	Daily Cover-PCS-Tons-Pet	100	35.90	Tons				KING
2	GONDOLA 16.10/TN-GONDOLA	100	35.90	Tons				KING

Total Tax
Total Ticket

Driver's Signature

BILL OF LADING/SCALE TICKET

WASTE MANAGEMENT

BOEING # Y3193

Generators Name & Address: BLDG # 3-360
BOEING CO. - NORTH BOEING FIELD
7500 E. MARGINAL WAY S.
SEATTLE, WA. 98108

Billing: BOEING CO.
Contact Person: FRED WALLACE - JENNIFER PARSON
Contact Number: (206) 930-0461 - (206) 715-7981
Fax Number:

Acknowledgement of Loading

FRED WALLACE BOEING - NORTH FIELD
Name (Please Print) Company

Signature 10/13/11
Date

Deliver To:	Disposal Facility:
ALASKA RELOAD & RECYCLING FACILITY 70 SOUTH ALASKA STREET SEATTLE, WASHINGTON 98134 TELEPHONE #: (206) 763-5025 MONDAY-FRIDAY 7:00AM-4:00PM	COLUMBIA RIDGE LANDFILL AND RECYCLING FACILITY 18177 CEDAR SPRINGS LANE ARLINGTON, OREGON 97812 TELEPHONE: (541) 454-2030

Transporter Name: (SELF HAUL) Harlow

Truck #: H13T

Waste Profile # 102596WA

Waste Type: ADC

Expiration Date: 01/07/12

IRV PAULL
Driver's Name (Please Print)

SIGNATURE

Remarks: DT/SELF HAUL (250 CY'S)

WASTE MANAGEMENT

Alaska Street
70 S Alaska Street
Seattle, WA, 98134

Reprint
Ticket# 33203

Ph: 206 763 5025

Customer Name BOEING BOEING
Ticket Date 10/13/2011
Payment Type Credit Account
Manual Ticket#
Route AK
Hauling Ticket#
Destination
PO# 102596WA

Carrier SELF HAULER *
Vehicle# H24T
Volume
Container
Driver KEVIN NEWMILLER
Check#
Billing# 0000013
Grid

	Time	Scale	Operator	Inbound		
In	10/13/2011 15:00:12	SCALE 1	lmercer		Gross	113180 lb
Out	10/13/2011 15:00:12		lmercer		Tare	41840 lb
					Net	71340 lb
					Tons	35.67

Comments HARLOW - LM (V3193)

	Product	LDX	Qty	UOM	Rate	Tax	Amount	Origin
1	Daily Cover-PCS-Tons-Pet	100	35.67	Tons				KING
2	GONDOLA 16.10/TN-GONDOLA	100	35.67	Tons				

Total Tax
Total Ticket

2038 Driver's Signature

BILL OF LADING/SCALE TICKET

WASTE MANAGEMENT

BOEING # Y3193

Generators Name & Address: BLDG # 3-360
BOEING CO. - NORTH BOEING FIELD
7500 E. MARGINAL WAY S.
SEATTLE, WA. 98108

Billing: BOEING CO.
Contact Person: FRED WALLACE - JENNIFER PARSON
Contact Number: (206) 930-0461 - (206) 715-7981
Fax Number:

Acknowledgement of Loading

FRED WALLACE — BOEING - NORTH FIELD
Name (Please Print) — Company

Signature — 10/13/11
Date

Deliver To:

ALASKA RELOAD & RECYCLING FACILITY
70 SOUTH ALASKA STREET
SEATTLE, WASHINGTON 98134
TELEPHONE #: (206) 763-5025
MONDAY-FRIDAY 7:00AM-4:00PM

Disposal Facility:

COLUMBIA RIDGE LANDFILL AND
RECYCLING FACILITY
18177 CEDAR SPRINGS LANE
ARLINGTON, OREGON 97812
TELEPHONE: (541) 454-2030

Transporter Name: (SELF HAUL)
Harlow

Truck #: H24T

Waste Profile # 102596WA

Waste Type: ADC

Expiration Date: 01/07/12

Kevin Newmiller
Driver's Name (Please Print)

SIGNATURE

Remarks: DT/SELF HAUL (250 CY'S)

WASTE MANAGEMENT

Alaska Street
70 S Alaska Street
Seattle, WA, 98134

Reprint
Ticket# 33204

Ph: 206 763 5025

Customer Name BOEING BOEING
Ticket Date 10/13/2011
Payment Type Credit Account
Manual Ticket#
Route AK
Hauling Ticket#
Destination
PO# 102596WA

Carrier SELF HAULER *
Vehicle# H13T
Volume
Container
Driver IRV PAULL
Check#
Billing# 0000013
Grid

	Time	Scale	Operator	Inbound		
In	10/13/2011 15:33:27	SCALE 1	lmercer		Gross	102220 lb
Out	10/13/2011 15:33:27		lmercer		Tare	41520 lb
					Net	60700 lb
					Tons	30.35

Comments HARLOW - LM (V3193)

	Product	LD%	Qty	UOM	Rate	Tax	Amount	Origin
1	Daily Cover-PCS-Tons-Pet	100	30.35	Tons				KING
2	GONDOLA 16.10/TN-GONDOLA	100	30.35	Tons				

Total Tax
Total Ticket

203WM Driver's Signature

BILL OF LADING/SCALE TICKET

WASTE MANAGEMENT

BOEING # Y3193

Generators Name & Address: BLDG # 3-360
BOEING CO. - NORTH BOEING FIELD
7500 E. MARGINAL WAY S.
SEATTLE, WA. 98108

Billing: BOEING CO.
Contact Person: FRED WALLACE - JENNIFER PARSON
Contact Number: (206) 930-0461 - (206) 716-7981
Fax Number:

Acknowledgement of Loading

FRED WALLACE BOEING - NORTH FIELD
Name (Please Print) Company

Signature 10/13/11
Date

Deliver To:	Disposal Facility:
ALASKA RELOAD & RECYCLING FACILITY 70 SOUTH ALASKA STREET SEATTLE, WASHINGTON 98134 TELEPHONE #: (206) 763-5025 MONDAY-FRIDAY 7:00AM-4:00PM	COLUMBIA RIDGE LANDFILL AND RECYCLING FACILITY 18177 CEDAR SPRINGS LANE ARLINGTON, OREGON 97812 TELEPHONE: (541) 454-2030

Transporter Name: (SELF HAUL)
Harlow

Truck #: H 13T

Waste Profile # 102596WA

Waste Type: ADC

Expiration Date: 01/07/12

IRV PAULL
Driver's Name (Please Print)

SIGNATURE

Remarks: DT / SELF HAUL (250 CY'S)

WASTE MANAGEMENT

Alaska Street
70 S Alaska Street
Seattle, WA, 98134

Reprint
Ticket# 33568

Ph: 206 763 5025

Customer Name BOEING BOEING
Ticket Date 10/26/2011
Payment Type Credit Account
Manual Ticket#
Route AK
Hauling Ticket#
Destination
PO# 102596WA

Carrier SELF HAULER *
Vehicle# H12
Volume
Container
Driver IRV PAULL
Check#
Billing# 0000013
Grid

	Time	Scale	Operator	Inbound		
In	10/26/2011 08:51:29	SCALE 1	lmercer		Gross	98000 lb
Out	10/26/2011 09:03:53	SCALE 1	lmercer		Tare	41160 lb
					Net	56840 lb
					Tons	28.42

Comments HARLOW - LM (V3557)

	Product	LD%	Qty	UOM	Rate	Tax	Amount	Origin
1	Daily Cover-PCS-Tons-Pet	100	28.42	Tons				KING
2	GONDOLA 16.10/TN-GONDOLA	100	28.42	Tons				KING

Total Tax
Total Ticket

203WM
Driver's Signature

WASTE MANAGEMENT

Alaska Street
70 S Alaska Street
Seattle, WA, 98134

Reprint
Ticket# 33578

Ph: 206 763 5025

Customer Name BOEING BOEING
Ticket Date 10/26/2011
Payment Type Credit Account
Manual Ticket#
Route AK
Hauling Ticket#
Destination
PO# 102596WA

Carrier SELF HAULER *
Vehicle# H12T
Volume
Container
Driver IRV DAULL
Check#
Billing# 0000013
Grid

	Time	Scale	Operator	Inbound		
In	10/26/2011 10:10:22	SCALE 1	lmercer		Gross	99420 lb
Out	10/26/2011 10:10:22		lmercer		Tare	41160 lb
					Net	58260 lb
					Tons	29.13

Comments HARLOW - LM (V3557)

	Product	LD%	Qty	UOM	Rate	Tax	Amount	Origin
1	Daily Cover-PCS-Tons-Pet	100	29.13	Tons				KING
2	GONDOLA 16.10/TN-GONDOLA	100	29.13	Tons				

Total Tax
Total Ticket

203WM

WASTE MANAGEMENT

Alaska Street
70 S Alaska Street
Seattle, WA, 98134

Reprint
Ticket# 33588
Ph: 206 763 5025

Customer Name BOEING BOEING
Ticket Date 10/26/2011
Payment Type Credit Account
Manual Ticket#
Route AK
Hauling Ticket#
Destination
PO# 102596WA

Carrier SELF HAULER *
Vehicle# H12T
Volume
Container
Driver IRV OAULL
Check#
Billing# 0000013
Grid

	Time	Scale	Operator	Inbound		
In	10/26/2011 11:00:48	SCALE 1	lmercer		Gross	98160 lb
Out	10/26/2011 11:00:48		lmercer		Tare	41160 lb
					Net	57000 lb
					Tons	28.50

Comments HARLOW - LM (V3557)

	Product	LD%	Qty	UOM	Rate	Tax	Amount	Origin
1	Daily Cover-PCS-Tons-Pet	100	28.50	Tons				KING
2	GONDOLA 16.10/TN-GONDOLA	100	28.50	Tons				

Total Tax
Total Ticket

203WM
Driver's Signature

WASTE MANAGEMENT

Alaska Street
70 S Alaska Street
Seattle, WA, 98134

Reprint
Ticket# 33596
Ph: 206 763 5025

Customer Name BOEING BOEING
Ticket Date 10/26/2011
Payment Type Credit Account
Manual Ticket#
Route AK
Hauling Ticket#
Destination
PO# 102596WA

Carrier SELF HAULER *
Vehicle# H12T
Volume
Container
Driver IRV OAULL
Check#
Billing# 0000013
Grid

	Time	Scale	Operator	Inbound		
In	10/26/2011 11:50:30	SCALE 1	lmercer		Gross	105700 lb
Out	10/26/2011 11:50:30		lmercer		Tare	41160 lb
					Net	64540 lb
					Tons	32.27

Comments HARLOW V3557
YE

	Product	LD%	Qty	UOM	Rate	Tax	Amount	Origin
1	Daily Cover-PCS-Tons-Pet	100	32.27	Tons				KING
2	GONDOLA 16.10/TN-GONDOLA	100	32.27	Tons				KING

Total Tax
Total Ticket

203WM
Driver's Signature

WASTE MANAGEMENT

Alaska Street
70 S Alaska Street
Seattle, WA, 98134

Reprint
Ticket# 33590

Ph: 206 763 5025

Customer Name BOEING BOEING
Ticket Date 10/26/2011
Payment Type Credit Account
Manual Ticket#
Route AK
Hauling Ticket#
Destination
PO# 102596WA

Carrier SELF HAULER *
Vehicle# H13T
Volume
Container
Driver PAT DUNN
Check#
Billing# 0000013
Grid

	Time	Scale	Operator	Inbound		
In	10/26/2011 11:10:30	SCALE 1	lmercer		Gross	92980 lb
Out	10/26/2011 11:10:30		lmercer		Tare	41520 lb
					Net	51460 lb
					Tons	25.73

Comments HARLOW - LM (V3557)

	Product	LD%	Qty	UOM	Rate	Tax	Amount	Origin
1	Daily Cover-PCS-Tons-Pet	100	25.73	Tons				KING
2	GONDOLA 16.10/TN-GONDOLA	100	25.73	Tons				

Total Tax
Total Ticket

203WM
Driver's Signature

WASTE MANAGEMENT

Alaska Street
70 S Alaska Street
Seattle, WA, 98134

Reprint
Ticket# 33581

Ph: 206 763 5025

Customer Name BOEING BOEING
Ticket Date 10/26/2011
Payment Type Credit Account
Manual Ticket#
Route AK
Hauling Ticket#
Destination
PO# 102596WA

Carrier SELF HAULER *
Vehicle# H13T
Volume
Container
Driver PAT DUNN
Check#
Billing# 0000013
Grid

	Time	Scale	Operator	Inbound		
In	10/26/2011 10:19:17	SCALE 1	lmercer		Gross	93080 lb
Out	10/26/2011 10:19:17		lmercer		Tare	41520 lb
					Net	51560 lb
					Tons	25.78

Comments HARLOW - LM (V3557)

	Product	LD%	Qty	UOM	Rate	Tax	Amount	Origin
1	Daily Cover-PCS-Tons-Pet	100	25.78	Tons				KING
2	GONDOLA 16.10/TN-GONDOLA	100	25.78	Tons				

Total Tax
Total Ticket

203WM
Driver's Signature

WASTE MANAGEMENT

Alaska Street .
70 S Alaska Street
Seattle, WA, 98134

Reprint
Ticket# 33591
Ph: 206 763 5025

Customer Name BOEING BOEING
Ticket Date 10/26/2011
Payment Type Credit Account
Manual Ticket#
Route AK
Hauling Ticket#
Destination
PO# 102596WA

Carrier SELF HAULER *
Vehicle# H27T
Volume
Container
Driver TODD STUBB
Check#
Billing# 0000013
Grid

	Time	Scale	Operator	Inbound		
In	10/26/2011 11:30:21	SCALE 1	lmercer		Gross	104560 lb
Out	10/26/2011 11:30:21		lmercer		Tare	42080 lb
					Net	62480 lb
					Tons	31.24

Comments HARLOW - LM (V3557)

	Product	LD%	Qty	UOM	Rate	Tax	Amount	Origin
1	Daily Cover-PCS-Tons-Pet	100	31.24	Tons				KING
2	GONDOLA 16.10/TN-GONDOLA	100	31.24	Tons				

Total Tax
Total Ticket

203WM
Driver's Signature

WASTE MANAGEMENT

Alaska Street .
70 S Alaska Street
Seattle, WA, 98134

Reprint
Ticket# 33584
Ph: 206 763 5025

Customer Name BOEING BOEING
Ticket Date 10/26/2011
Payment Type Credit Account
Manual Ticket#
Route AK
Hauling Ticket#
Destination
PO# 102596WA

Carrier SELF HAULER *
Vehicle# H27T
Volume
Container
Driver TODD STUBB
Check#
Billing# 0000013
Grid

	Time	Scale	Operator	Inbound		
In	10/26/2011 10:28:25	SCALE 1	lmercer		Gross	95380 lb
Out	10/26/2011 10:28:25		lmercer		Tare	42080 lb
					Net	53300 lb
					Tons	26.65

Comments HARLOW - LM (V3557)

	Product	LD%	Qty	UOM	Rate	Tax	Amount	Origin
1	Daily Cover-PCS-Tons-Pet	100	26.65	Tons				KING
2	GONDOLA 16.10/TN-GONDOLA	100	26.65	Tons				

Total Tax
Total Ticket

203WM
Driver's Signature

WASTE MANAGEMENT

Alaska Street
70 S Alaska Street
Seattle, WA, 98134

Reprint
Ticket# 33602

Ph: 206 763 5025

Customer Name BOEING BOEING
Ticket Date 10/26/2011
Payment Type Credit Account
Manual Ticket#
Route AK
Hauling Ticket#
Destination
PO# 102596WA

Carrier SELF HAULER *
Vehicle# H27T
Volume
Container
Driver TODD STUBB
Check#
Billing# 0000013
Grid

	Time	Scale	Operator	Inbound		
In	10/26/2011 12:23:14	SCALE 1	lmercer		Gross	102320 lb
Out	10/26/2011 12:23:14		lmercer		Tare	42080 lb
					Net	60240 lb
					Tons	30.12

Comments BOEING V3557 PROFILE 102596WA HARLOW YE

	Product	LD%	Qty	UOM	Rate	Tax	Amount	Origin
1	Daily Cover-PCS-Tons-Pet	100	30.12	Tons				KING
2	GONDOLA 16.10/TN-GONDOLA	100	30.12	Tons				

Total Tax
Total Ticket

203WM Driver's Signature

WASTE MANAGEMENT

Alaska Street
70 S Alaska Street
Seattle, WA, 98134

Reprint
Ticket# 33611

Ph: 206 763 5025

Customer Name BOEING BOEING
Ticket Date 10/26/2011
Payment Type Credit Account
Manual Ticket#
Route AK
Hauling Ticket#
Destination
PO# 102596WA

Carrier SELF HAULER *
Vehicle# H27S
Volume
Container
Driver TODD STUBB
Check#
Billing# 0000013
Grid

	Time	Scale	Operator	Inbound		
In	10/26/2011 13:26:45	SCALE 1	lmercer		Gross	52500 lb
Out	10/26/2011 13:31:13	SCALE 1	lmercer		Tare	26280 lb
					Net	26220 lb
					Tons	13.11

Comments HARLOW - LM (V3557)

	Product	LD%	Qty	UOM	Rate	Tax	Amount	Origin
1	Daily Cover-PCS-Tons-Pet	100	13.11	Tons				KING
2	GONDOLA 16.10/TN-GONDOLA	100	13.11	Tons				KING

Total Tax
Total Ticket

203WM Driver's Signature

WASTE MANAGEMENT

Alaska Street
70 S Alaska Street
Seattle, WA, 98134

Reprint
Ticket# 33607

Ph: 206 763 5025

Customer Name BOEING BOEING
Ticket Date 10/26/2011
Payment Type Credit Account
Manual Ticket#
Route AK
Hauling Ticket#
Destination
PO# 102596WA

Carrier SELF HAULER *
Vehicle# H12T
Volume
Container
Driver IRV DAULL
Check#
Billing# 0000013
Grid

	Time	Scale	Operator	Inbound		
In	10/26/2011 12:52:02	SCALE 1	lmercer		Gross	109100 lb
Out	10/26/2011 12:52:02		lmercer		Tare	41160 lb
					Net	67940 lb
					Tons	33.97

Comments HARLOW - LM (V3557)

	Product	LD%	Qty	UOM	Rate	Tax	Amount	Origin
1	Daily Cover-PCS-Tons-Pet	100	33.97	Tons				KING
2	GONDOLA 16.10/TN-GONDOLA	100	33.97	Tons				

Total Tax
Total Ticket

203WM
Driver's Signature

WASTE MANAGEMENT

Alaska Street
70 S Alaska Street
Seattle, WA, 98134

Reprint
Ticket# 33618

Ph: 206 763 5025

Customer Name BOEING BOEING
Ticket Date 10/26/2011
Payment Type Credit Account
Manual Ticket#
Route AK
Hauling Ticket#
Destination
PO# 102596WA

Carrier SELF HAULER *
Vehicle# H12S
Volume
Container
Driver IRV PAULL
Check#
Billing# 0000013
Grid

	Time	Scale	Operator	Inbound		
In	10/26/2011 14:23:17	SCALE 1	lmercer		Gross	54040 lb
Out	10/26/2011 14:23:17		lmercer		Tare	25840 lb
					Net	28200 lb
					Tons	14.10

Comments HARLOW - LM (V3557)

	Product	LD%	Qty	UOM	Rate	Tax	Amount	Origin
1	Daily Cover-PCS-Tons-Pet	100	14.10	Tons				KING
2	GONDOLA 16.10/TN-GONDOLA	100	14.10	Tons				

Total Tax
Total Ticket

203WM
Driver's Signature

WASTE MANAGEMENT

Alaska Street
70 S Alaska Street
Seattle, WA, 98134

Reprint
Ticket# 33610
Ph: 206 763 5025

Customer Name BOEING BOEING
Ticket Date 10/26/2011
Payment Type Credit Account
Manual Ticket#
Route AK
Hauling Ticket#
Destination
PO# 102596WA

Carrier SELF HAULER *
Vehicle# H13S
Volume
Container
Driver PAT DUNN
Check#
Billing# 0000013
Grid

	Time	Scale	Operator	Inbound		
In	10/26/2011 13:24:21	SCALE 1	lmercer		Gross	57120 lb
Out	10/26/2011 13:28:47	SCALE 1	lmercer		Tare	26180 lb
					Net	30940 lb
					Tons	15.47

Comments HARLOW - LM (V3557)

	Product	LD%	Qty	UOM	Rate	Tax	Amount	Origin
1	Daily Cover-PCS-Tons-Pet	100	15.47	Tons				KING
2	GONDOLA 16.10/TN-GONDOLA	100	15.47	Tons				KING

Total Tax
Total Ticket

203WM

WASTE MANAGEMENT

Alaska Street
70 S Alaska Street
Seattle, WA, 98134

Reprint
Ticket# 33599
Ph: 206 763 5025

Customer Name BOEING BOEING
Ticket Date 10/26/2011
Payment Type Credit Account
Manual Ticket#
Route AK
Hauling Ticket#
Destination
PO# 102596WA

Carrier SELF HAULER *
Vehicle# H13T
Volume
Container
Driver PAT DUNN
Check#
Billing# 0000013
Grid

	Time	Scale	Operator	Inbound		
In	10/26/2011 12:05:15	SCALE 1	lmercer		Gross	102560 lb
Out	10/26/2011 12:05:15		lmercer		Tare	41520 lb
					Net	61040 lb
					Tons	30.52

Comments 106596WA HARLOW
V3557 YE

	Product	LD%	Qty	UOM	Rate	Tax	Amount	Origin
1	Daily Cover-PCS-Tons-Pet	100	30.52	Tons				KING
2	GONDOLA 16.10/TN-GONDOLA	100	30.52	Tons				

Total Tax
Total Ticket

203WM
Driver's Signature

WASTE MANAGEMENT

Alaska Street
70 S Alaska Street
Seattle, WA, 98134

Reprint
Ticket# 33613

Ph: 206 763 5025

Customer Name BOEING BOEING
Ticket Date 10/26/2011
Payment Type Credit Account
Manual Ticket#
Route AK
Hauling Ticket#
Destination
PO# 102596WA

Carrier SELF HAULER *
Vehicle# H12S
Volume
Container
Driver IRV PAULL
Check#
Billing# 0000013
Grid

	Time	Scale	Operator	Inbound		
In	10/26/2011 13:38:27	SCALE 1	lmercer		Gross	51700 lb
Out	10/26/2011 13:38:27		lmercer		Tare	25840 lb
					Net	25860 lb
					Tons	12.93

Comments HARLOW - LM (V3557)

	Product	LD%	Qty	UOM	Rate	Tax	Amount	Origin
1	Daily Cover-PCS-Tons-Pet	100	12.93	Tons				KING
2	GONDOLA 16.10/TN-GONDOLA	100	12.93	Tons				

Total Tax
Total Ticket

203WM
Driver's Signature

WASTE MANAGEMENT

Alaska Street
70 S Alaska Street
Seattle, WA, 98134

Reprint
Ticket# 33569

Ph: 206 763 5025

Customer Name BOEING BOEING
Ticket Date 10/26/2011
Payment Type Credit Account
Manual Ticket#
Route AK
Hauling Ticket#
Destination
PO# 102596WA

Carrier SELF HAULER *
Vehicle# H13T
Volume
Container
Driver PAT DUNN
Check#
Billing# 0000013
Grid

	Time	Scale	Operator	Inbound		
In	10/26/2011 08:56:11	SCALE 1	lmercer		Gross	94220 lb
Out	10/26/2011 08:56:11		lmercer		Tare	41520 lb
					Net	52700 lb
					Tons	26.35

Comments HARLOW - LM (V3557)

	Product	LD%	Qty	UOM	Rate	Tax	Amount	Origin
1	Daily Cover-PCS-Tons-Pet	100	26.35	Tons				KING
2	GONDOLA 16.10/TN-GONDOLA	100	26.35	Tons				

Total Tax
Total Ticket

203WM
Driver's Signature

WASTE MANAGEMENT

Alaska Street
70 S Alaska Street
Seattle, WA, 98134

Reprint
Ticket# 33616

Ph: 206 763 5025

Customer Name BOEING BOEING
Ticket Date 10/26/2011
Payment Type Credit Account
Manual Ticket#
Route AK
Hauling Ticket#
Destination
PO# 102596WA

Carrier SELF HAULER *
Vehicle# H13S
Volume
Container
Driver PAT DUNN
Check#
Billing# 0000013
Grid

	Time	Scale	Operator	Inbound		
In	10/26/2011 14:03:09	SCALE 1	lmercer		Gross	56060 lb
Out	10/26/2011 14:03:09		lmercer		Tare	26180 lb
					Net	29880 lb
					Tons	14.94

Comments HARLOW - LM 9V3557)

	Product	LD%	Qty	UOM	Rate	Tax	Amount	Origin
1	Daily Cover-PCS-Tons-Pet	100	14.94	Tons				KING
2	GONDOLA 16.10/TN-GONDOLA	100	14.94	Tons				

Total Tax
Total Ticket

203WM
Driver's Signature

WASTE MANAGEMENT

Alaska Street
70 S Alaska Street
Seattle, WA, 98134

Reprint
Ticket# 33570

Ph: 206 763 5025

Customer Name BOEING BOEING
Ticket Date 10/26/2011
Payment Type Credit Account
Manual Ticket#
Route AK
Hauling Ticket#
Destination
PO# 102596WA

Carrier SELF HAULER *
Vehicle# H27T
Volume
Container
Driver TODD STUBB
Check#
Billing# 0000013
Grid

	Time	Scale	Operator	Inbound		
In	10/26/2011 09:01:43	SCALE 1	lmercer		Gross	87520 lb
Out	10/26/2011 09:15:52	SCALE 1	lmercer		Tare	42080 lb
					Net	45440 lb
					Tons	22.72

Comments HARLOW - LM (V3557)

	Product	LD%	Qty	UOM	Rate	Tax	Amount	Origin
1	Daily Cover-PCS-Tons-Pet	100	22.72	Tons				KING
2	GONDOLA 16.10/TN-GONDOLA	100	22.72	Tons				KING

Total Tax
Total Ticket

203WM
Driver's Signature

WASTE MANAGEMENT

Alaska Street
70 S Alaska Street
Seattle, WA, 98134

Reprint
Ticket# 33617

Ph: 206 763 5025

Customer Name BOEING BOEING
Ticket Date 10/26/2011
Payment Type Credit Account
Manual Ticket#
Route AK
Hauling Ticket#
Destination
PO# 102596WA

Carrier SELF HAULER *
Vehicle# H27S
Volume
Container
Driver TODD STUBB
Check#
Billing# 0000013
Grid

	Time	Scale	Operator	Inbound		
In	10/26/2011 14:21:12	SCALE 1	lmercer		Gross	53200 lb
Out	10/26/2011 14:21:12		lmercer		Tare	26280 lb
					Net	26920 lb
					Tons	13.46

Comments HARLOW - LM (V3557)

	Product	LD%	Qty	UOM	Rate	Tax	Amount	Origin
1	Daily Cover-PCS-Tons-Pet	100	13.46	Tons				KING
2	GONDOLA 16.10/TN-GONDOLA	100	13.46	Tons				

Total Tax
Total Ticket

203WM Driver's Signature

WASTE MANAGEMENT

Alaska Street
70 S Alaska Street
Seattle, WA, 98134

Reprint
Ticket# 33813

Ph: 206 763 5025

Customer Name BOEING BOEING
Ticket Date 11/03/2011
Payment Type Credit Account
Manual Ticket#
Route AK
Hauling Ticket#
Destination
PO# 102596WA

Carrier SELF HAULER *
Vehicle# H8
Container
Driver TIM ERSKINE
Check#
Billing# 0000013
Grid

Volume

	Time	Scale	Operator	Inbound		
In	11/03/2011 09:13:51	SCALE 1	LMERCER		Gross	109340 lb
Out	11/03/2011 09:13:51		LMERCER		Tare	41760 lb
					Net	67580 lb
					Tons	33.79

Comments HARLOW - LM (V3647)

	Product	LD%	Qty	UOM	Rate	Tax	Amount	Origin
1	Daily Cover-PCS-Tons-Pet	100	33.79	Tons				KING
2	GONDOLA 16.10/TN-GONDOLA	100	33.79	Tons				

11-038

Total Tax
Total Ticket

203WM Driver's Signature

WASTE MANAGEMENT

Alaska Street
70 S Alaska Street
Seattle, WA, 98134

Reprint
Ticket# 33818

Ph: 206 763 5025

Customer Name BOEING BOEING
Ticket Date 11/03/2011
Payment Type Credit Account
Manual Ticket#
Route AK
Hauling Ticket#
Destination
PO# 102596WA

Carrier SELF HAULER *
Vehicle# H8
Container
Driver TIM ERSKINE
Check#
Billing# 0000013
Grid

Volume

	Time	Scale	Operator	Inbound		
In	11/03/2011 09:56:03	SCALE 1	LMERCER		Gross	114500 lb
Out	11/03/2011 09:56:03		LMERCER		Tare	41760 lb
					Net	72740 lb
					Tons	36.37

Comments HARLOW - LM (V3647)

	Product	LD%	Qty	UOM	Rate	Tax	Amount	Origin
1	Daily Cover-PCS-Tons-Pet	100	36.37	Tons				KING
2	GONDOLA 16.10/TN-GONDOLA	100	36.37	Tons				

11-038

Total Tax
Total Ticket

203WM Driver's Signature

WASTE MANAGEMENT

Alaska Street
70 S Alaska Street
Seattle, WA, 98134

Reprint
Ticket# 33817

Ph: 206 763 5025

Customer Name BOEING BOEING
Ticket Date 11/03/2011
Payment Type Credit Account
Manual Ticket#
Route AK
Hauling Ticket#
Destination
PO# 102596WA

Carrier SELF HAULER *
Vehicle# H20T
Volume
Container
Driver DON AVERY
Check#
Billing# 0000013
Grid

	Time	Scale	Operator	Inbound		
In	11/03/2011 09:50:36	SCALE 1	LMERCER		Gross	104100 lb
Out	11/03/2011 09:50:36		LMERCER		Tare	40560 lb
					Net	63540 lb
					Tons	31.77

Comments HARLOW - LM (V3647)

	Product	LD%	Qty	UOM	Rate	Tax	Amount	Origin
1	Daily Cover-PCS-Tons-Pet	100	31.77	Tons				KING
2	GONDOLA 16.10/TN-GONDOLA	100	31.77	Tons				

Total Tax
Total Ticket

203WM Driver's Signature

WASTE MANAGEMENT

Alaska Street
70 S Alaska Street
Seattle, WA, 98134

Reprint
Ticket# 33820

Ph: 206 763 5025

Customer Name BOEING BOEING
Ticket Date 11/03/2011
Payment Type Credit Account
Manual Ticket#
Route AK
Hauling Ticket#
Destination
PO# 102596WA

Carrier SELF HAULER *
Vehicle# H20T
Volume
Container
Driver DON AVERY
Check#
Billing# 0000013
Grid

	Time	Scale	Operator	Inbound		
In	11/03/2011 10:34:47	SCALE 1	LMERCER		Gross	103560 lb
Out	11/03/2011 10:34:47		LMERCER		Tare	40560 lb
					Net	63000 lb
					Tons	31.50

Comments HARLOW - LM (V3647)

	Product	LD%	Qty	UOM	Rate	Tax	Amount	Origin
1	Daily Cover-PCS-Tons-Pet	100	31.50	Tons				KING
2	GONDOLA 16.10/TN-GONDOLA	100	31.50	Tons				

Total Tax
Total Ticket

203WM Driver's Signature

WASTE MANAGEMENT

Alaska Street
70 S Alaska Street
Seattle, WA, 98134

Reprint
Ticket# 33819

Ph: 206 763 5025

Customer Name BOEING BOEING
Ticket Date 11/03/2011
Payment Type Credit Account
Manual Ticket#
Route AK
Hauling Ticket#
Destination
PO# 102596WA

Carrier SELF HAULER *
Vehicle# H12T
Volume
Container
Driver IRV OAULL
Check#
Billing# 0000013
Grid

	Time	Scale	Operator	Inbound		
In	11/03/2011 10:08:55	SCALE 1	LMERCER		Gross	112180 lb
Out	11/03/2011 10:08:55		LMERCER		Tare	41160 lb
					Net	71020 lb
					Tons	35.51

Comments HARLOW - LM (V3647)

	Product	LD%	Qty	UOM	Rate	Tax	Amount	Origin
1	Daily Cover-PCS-Tons-Pet	100	35.51	Tons				KING
2	GONDOLA 16.10/TN-GONDOLA	100	35.51	Tons				

Total Tax
Total Ticket

203WM
Driver's Signature

WASTE MANAGEMENT

Alaska Street
70 S Alaska Street
Seattle, WA, 98134

Reprint
Ticket# 33825

Ph: 206 763 5025

Customer Name BOEING BOEING
Ticket Date 11/03/2011
Payment Type Credit Account
Manual Ticket#
Route AK
Hauling Ticket#
Destination
PO# 102596WA

Carrier SELF HAULER *
Vehicle# H12T
Volume
Container
Driver IRV OAULL
Check#
Billing# 0000013
Grid

	Time	Scale	Operator	Inbound		
In	11/03/2011 10:59:33	SCALE 1	LMERCER		Gross	106700 lb
Out	11/03/2011 10:59:33		LMERCER		Tare	41160 lb
					Net	65540 lb
					Tons	32.77

Comments HARLOW - LM (V3647)

	Product	LD%	Qty	UOM	Rate	Tax	Amount	Origin
1	Daily Cover-PCS-Tons-Pet	100	32.77	Tons				KING
2	GONDOLA 16.10/TN-GONDOLA	100	32.77	Tons				

Total Tax
Total Ticket

203WM
Driver's Signature

WASTE MANAGEMENT

Alaska Street
70 S Alaska Street
Seattle, WA, 98134

Reprint
Ticket# 33821

Ph: 206 763 5025

Customer Name BOEING BOEING
Ticket Date 11/03/2011
Payment Type Credit Account
Manual Ticket#
Route AK
Hauling Ticket#
Destination
PO# 102596WA

Carrier SELF HAULER *
Vehicle# H8
Volume
Container
Driver TIM ERSKINE
Check#
Billing# 0000013
Grid

	Time	Scale	Operator	Inbound		
In	11/03/2011 10:43:13	SCALE 1	LMERCER		Gross	102740 lb
Out	11/03/2011 10:43:15		LMERCER		Tare	41760 lb
					Net	60980 lb
					Tons	30.49

Comments HARLOW - LM (V3647)

	Product	LD%	Qty	UOM	Rate	Tax	Amount	Origin
1	Daily Cover-PCS-Tons-Pet	100	30.49	Tons				KING
2	GONDOLA 16.10/TN-GONDOLA	100	30.49	Tons				

11-038

Total Tax
Total Ticket

203WM Driver's Signature

WASTE MANAGEMENT

Alaska Street
70 S Alaska Street
Seattle, WA, 98134

Reprint
Ticket# 33829

Ph: 206 763 5025

Customer Name BOEING BOEING
Ticket Date 11/03/2011
Payment Type Credit Account
Manual Ticket#
Route AK
Hauling Ticket#
Destination
PO# 102596WA

Carrier SELF HAULER *
Vehicle# H8
Volume
Container
Driver TIM ERSKINE
Check#
Billing# 0000013
Grid

	Time	Scale	Operator	Inbound		
In	11/03/2011 11:30:47	SCALE 1	LMERCER		Gross	106660 lb
Out	11/03/2011 11:30:47		LMERCER		Tare	41760 lb
					Net	64900 lb
					Tons	32.45

Comments HARLOW V3647
YE

	Product	LD%	Qty	UOM	Rate	Tax	Amount	Origin
1	Daily Cover-PCS-Tons-Pet	100	32.45	Tons				KING
2	GONDOLA 16.10/TN-GONDOLA	100	32.45	Tons				

11-038

Total Tax
Total Ticket

203WM

WASTE MANAGEMENT

Alaska Street
70 S Alaska Street
Seattle, WA, 98134

Reprint
Ticket# 33827

Ph: 206 763 5025

Customer Name BOEING BOEING
Ticket Date 11/03/2011
Payment Type Credit Account
Manual Ticket#
Route AK
Hauling Ticket#
Destination
PO# 102596WA

Carrier SELF HAULER *
Vehicle# H20T
Volume
Container
Driver DON AVERY
Check#
Billing# 0000013
Grid

	Time	Scale	Operator	Inbound		
In	11/03/2011 11:18:31	SCALE 1	LMERCER		Gross	98040 lb
Out	11/03/2011 11:18:31		LMERCER		Tare	40560 lb
					Net	57480 lb
					Tons	28.74

Comments HARLOW V3647

	Product	LD%	Qty	UOM	Rate	Tax	Amount	Origin
1	Daily Cover-PCS-Tons-Pet	100	28.74	Tons				KING
2	GONDOLA 16.10/TN-GONDOLA	100	28.74	Tons				

Total Tax
Total Ticket

203WM
Driver's Signature

WASTE MANAGEMENT

Alaska Street
70 S Alaska Street
Seattle, WA, 98134

Reprint
Ticket# 33834

Ph: 206 763 5025

Customer Name BOEING BOEING
Ticket Date 11/03/2011
Payment Type Credit Account
Manual Ticket#
Route AK
Hauling Ticket#
Destination
PO# 102596WA

Carrier SELF HAULER *
Vehicle# H20T
Volume
Container
Driver DON AVERY
Check#
Billing# 0000013
Grid

	Time	Scale	Operator	Inbound		
In	11/03/2011 12:11:27	SCALE 1	LMERCER		Gross	97360 lb
Out	11/03/2011 12:11:27		LMERCER		Tare	40560 lb
					Net	56800 lb
					Tons	28.40

Comments HARLOW - LM (V3647)

	Product	LD%	Qty	UOM	Rate	Tax	Amount	Origin
1	Daily Cover-PCS-Tons-Pet	100	28.40	Tons				KING
2	GONDOLA 16.10/TN-GONDOLA	100	28.40	Tons				

Total Tax
Total Ticket

203WM
Driver's Signature

WASTE MANAGEMENT

Alaska Street
70 S Alaska Street
Seattle, WA, 98134

Reprint
Ticket# 33837

Ph: 206 763 5025

Customer Name BOEING BOEING
Ticket Date 11/03/2011
Payment Type Credit Account
Manual Ticket#
Route AK
Hauling Ticket#
Destination
PO# 102596WA

Carrier SELF HAULER *
Vehicle# H8
Container
Driver TIM ERSKINE
Check#
Billing# 0000013
Grid

Volume

	Time	Scale	Operator	Inbound		
In	11/03/2011 12:24:40	SCALE 1	LMERCER		Gross	107860 lb
Out	11/03/2011 12:24:40		LMERCER		Tare	41760 lb
					Net	66100 lb
					Tons	33.05

Comments HARLOW - LM 9V3647)

	Product	LD%	Qty	UOM	Rate	Tax	Amount	Origin
1	Daily Cover-PCS-Tons-Pet	100	33.05	Tons				KING
2	GONDOLA 16.10/TN-GONDOLA	100	33.05	Tons				

11-038

Total Tax
Total Ticket

203WM Driver's Signature

WASTE MANAGEMENT

Alaska Street
70 S Alaska Street
Seattle, WA, 98134

Reprint
Ticket# 33845

Ph: 206 763 5025

Customer Name BOEING BOEING
Ticket Date 11/03/2011
Payment Type Credit Account
Manual Ticket#
Route AK
Hauling Ticket#
Destination
PO# 102596WA

Carrier SELF HAULER *
Vehicle# H8
Container
Driver TIM ERSKINE
Check#
Billing# 0000013
Grid

Volume

	Time	Scale	Operator	Inbound		
In	11/03/2011 13:13:35	SCALE 1	LMERCER		Gross	111300 lb
Out	11/03/2011 13:13:35		LMERCER		Tare	41760 lb
					Net	69540 lb
					Tons	34.77

Comments HARLOW - LM (V3647)

	Product	LD%	Qty	UOM	Rate	Tax	Amount	Origin
1	Daily Cover-PCS-Tons-Pet	100	34.77	Tons				KING
2	GONDOLA 16.10/TN-GONDOLA	100	34.77	Tons				

11-038

Total Tax
Total Ticket

203WM

WASTE MANAGEMENT

Alaska Street
70 S Alaska Street
Seattle, WA, 98134

Reprint
Ticket# 33839

Ph: 206 763 5025

Customer Name BOEING BOEING
Ticket Date 11/03/2011
Payment Type Credit Account
Manual Ticket#
Route AK
Hauling Ticket#
Destination
PO# 102596WA

Carrier SELF HAULER *
Vehicle# H12T
Volume
Container
Driver IRV OAULL
Check#
Billing# 0000013
Grid

	Time	Scale	Operator	Inbound		
In	11/03/2011 12:40:50	SCALE 1	LMERCER		Gross	105060 lb
Out	11/03/2011 12:40:50		LMERCER		Tare	41160 lb
					Net	63900 lb
					Tons	31.95

Comments HARLOW - LM (V3647)

	Product	LD%	Qty	UOM	Rate	Tax	Amount	Origin
1	Daily Cover-PCS-Tons-Pet	100	31.95	Tons				KING
2	GONDOLA 16.10/TN-GONDOLA	100	31.95	Tons				

Total Tax
Total Ticket

203WM
Driver's Signature

WASTE MANAGEMENT

Alaska Street
70 S Alaska Street
Seattle, WA, 98134

Reprint
Ticket# 33833

Ph: 206 763 5025

Customer Name BOEING BOEING
Ticket Date 11/03/2011
Payment Type Credit Account
Manual Ticket#
Route AK
Hauling Ticket#
Destination
PO# 102596WA

Carrier SELF HAULER *
Vehicle# H12T
Volume
Container
Driver IRV OAULL
Check#
Billing# 0000013
Grid

	Time	Scale	Operator	Inbound		
In	11/03/2011 11:58:37	SCALE 1	LMERCER		Gross	102060 lb
Out	11/03/2011 11:58:37		LMERCER		Tare	41160 lb
					Net	60900 lb
					Tons	30.45

Comments HARLOW - LM (V3647)

	Product	LD%	Qty	UOM	Rate	Tax	Amount	Origin
1	Daily Cover-PCS-Tons-Pet	100	30.45	Tons				KING
2	GONDOLA 16.10/TN-GONDOLA	100	30.45	Tons				

Total Tax
Total Ticket

203WM
Driver's Signature

WASTE MANAGEMENT

Alaska Street
70 S Alaska Street
Seattle, WA, 98134

Reprint
Ticket# 33842

Ph: 206 763 5025

Customer Name BOEING BOEING
Ticket Date 11/03/2011
Payment Type Credit Account
Manual Ticket#
Route AK
Hauling Ticket#
Destination
PO# 102596WA

Carrier SELF HAULER *
Vehicle# H20T
Volume
Container
Driver DON AVERY
Check#
Billing# 0000013
Grid

	Time	Scale	Operator	Inbound		
In	11/03/2011 13:00:10	SCALE 1	LMERCER		Gross	103240 lb
Out	11/03/2011 13:00:10		LMERCER		Tare	40560 lb
					Net	62680 lb
					Tons	31.34

Comments HARLOW - LM (V3647)

	Product	LD%	Qty	UOM	Rate	Tax	Amount	Origin
1	Daily Cover-PCS-Tons-Pet	100	31.34	Tons				KING
2	GONDOLA 16.10/TN-GONDOLA	100	31.34	Tons				

Total Tax
Total Ticket

203WM
Driver's Signature

WASTE MANAGEMENT

Alaska Street
70 S Alaska Street
Seattle, WA, 98134

Reprint
Ticket# 33847

Ph: 206 763 5025

Customer Name BOEING BOEING
Ticket Date 11/03/2011
Payment Type Credit Account
Manual Ticket#
Route AK
Hauling Ticket#
Destination
PO# 102596WA

Carrier SELF HAULER *
Vehicle# H20T
Volume
Container
Driver DON AVERY
Check#
Billing# 0000013
Grid

	Time	Scale	Operator	Inbound		
In	11/03/2011 13:41:40	SCALE 1	LMERCER		Gross	104120 lb
Out	11/03/2011 13:41:40		LMERCER		Tare	40560 lb
					Net	63560 lb
					Tons	31.78

Comments HARLOW - LM (V3647)

	Product	LD%	Qty	UOM	Rate	Tax	Amount	Origin
1	Daily Cover-PCS-Tons-Pet	100	31.78	Tons				KING
2	GONDOLA 16.10/TN-GONDOLA	100	31.78	Tons				

Total Tax
Total Ticket

203WM

WASTE MANAGEMENT

Alaska Street
70 S Alaska Street
Seattle, WA, 98134

Reprint
Ticket# 33846

Ph: 206 763 5025

Customer Name BOEING BOEING
Ticket Date 11/03/2011
Payment Type Credit Account
Manual Ticket#
Route AK
Hauling Ticket#
Destination
PO# 102596WA

Carrier SELF HAULER *
Vehicle# H12T
Volume
Container
Driver IRV OAULL
Check#
Billing# 0000013
Grid

	Time	Scale	Operator	Inbound		
In	11/03/2011 13:19:42	SCALE 1	LMERCER		Gross	103740 lb
Out	11/03/2011 13:19:42		LMERCER		Tare	41160 lb
					Net	62580 lb
					Tons	31.29

Comments HARLOW - LM (V3647)

	Product	LD%	Qty	UOM	Rate	Tax	Amount	Origin
1	Daily Cover-PCS-Tons-Pet	100	31.29	Tons				KING
2	GONDOLA 16.10/TN-GONDOLA	100	31.29	Tons				

Total Tax
Total Ticket

203WM
Driver's Signature

WASTE MANAGEMENT

Alaska Street
70 S Alaska Street
Seattle, WA, 98134

Reprint
Ticket# 33850

Ph: 206 763 5025

Customer Name BOEING BOEING
Ticket Date 11/03/2011
Payment Type Credit Account
Manual Ticket#
Route AK
Hauling Ticket#
Destination
PO# 102596WA

Carrier SELF HAULER *
Vehicle# H12T
Volume
Container
Driver IRV PAULL
Check#
Billing# 0000013
Grid

	Time	Scale	Operator	Inbound		
In	11/03/2011 14:03:08	SCALE 1	LMERCER		Gross	98740 lb
Out	11/03/2011 14:03:08		LMERCER		Tare	41160 lb
					Net	57580 lb
					Tons	28.79

Comments HARLOW - LM (V3647)

	Product	LD%	Qty	UOM	Rate	Tax	Amount	Origin
1	Daily Cover-PCS-Tons-Pet	100	28.79	Tons				KING
2	GONDOLA 16.10/TN-GONDOLA	100	28.79	Tons				

Total Tax
Total Ticket

203WM
Driver's Signature

WASTE MANAGEMENT

Alaska Street
70 S Alaska Street
Seattle, WA, 98134

Reprint
Ticket# 33849

Ph: 206 763 5025

Customer Name BOEING BOEING
Ticket Date 11/03/2011
Payment Type Credit Account
Manual Ticket#
Route AK
Hauling Ticket#
Destination
PO# 102596WA

Carrier SELF HAULER *
Vehicle# H8
Container
Driver TIM ERSKINE
Check#
Billing# 0000013
Grid

Volume

	Time	Scale	Operator	Inbound		
In	11/03/2011 13:57:02	SCALE 1	LMERCER		Gross	104500 lb
Out	11/03/2011 13:57:02		LMERCER		Tare	41760 lb
					Net	62740 lb
					Tons	31.37

Comments HARLOW - LM (V3647)

	Product	LD%	Qty	UOM	Rate	Tax	Amount	Origin
1	Daily Cover-PCS-Tons-Pet	100	31.37	Tons				KING
2	GONDOLA 16.10/TN-GONDOLA	100	31.37	Tons				

11-038

Total Tax
Total Ticket

203WM Driver's Signature

WASTE MANAGEMENT

Alaska Street
70 S Alaska Street
Seattle, WA, 98134

Reprint
Ticket# 33852

Ph: 206 763 5025

Customer Name BOEING BOEING
Ticket Date 11/03/2011
Payment Type Credit Account
Manual Ticket#
Route AK
Hauling Ticket#
Destination
PO# 102596WA

Carrier SELF HAULER *
Vehicle# H8
Container
Driver TIM ERSKINE
Check#
Billing# 0000013
Grid

Volume

	Time	Scale	Operator	Inbound		
In	11/03/2011 14:44:41	SCALE 1	LMERCER		Gross	108740 lb
Out	11/03/2011 14:44:41		LMERCER		Tare	41760 lb
					Net	66980 lb
					Tons	33.49

Comments HARLOW - LM (V3647)

	Product	LD%	Qty	UOM	Rate	Tax	Amount	Origin
1	Daily Cover-PCS-Tons-Pet	100	33.49	Tons				KING
2	GONDOLA 16.10/TN-GONDOLA	100	33.49	Tons				

11-038

Total Tax
Total Ticket

203WM Driver's Signature

WASTE MANAGEMENT

Alaska Street
70 S Alaska Street
Seattle, WA, 98134

Reprint
Ticket# 33851

Ph: 206 763 5025

Customer Name BOEING BOEING
Ticket Date 11/03/2011
Payment Type Credit Account
Manual Ticket#
Route AK
Hauling Ticket#
Destination
PO# 102596WA

Carrier SELF HAULER *
Vehicle# H20T
Container
Driver DON AVERY
Check#
Billing# 0000013
Grid

Volume

	Time	Scale	Operator	Inbound		
In	11/03/2011 14:25:02	SCALE 1	LMERCER		Gross	108780 lb
Out	11/03/2011 14:25:02		LMERCER		Tare	40560 lb
					Net	68220 lb
					Tons	34.11

Comments HARLOW - LM (V3647)

	Product	LD%	Qty	UOM	Rate	Tax	Amount	Origin
1	Daily Cover-PCS-Tons-Pet	100	34.11	Tons				KING
2	GONDOLA 16.10/TN-GONDOLA	100	34.11	Tons				

Total Tax
Total Ticket

203WM
Driver's Signature

WASTE MANAGEMENT

Alaska Street
70 S Alaska Street
Seattle, WA, 98134

Reprint
Ticket# 33854

Ph: 206 763 5025

Customer Name BOEING BOEING
Ticket Date 11/03/2011
Payment Type Credit Account
Manual Ticket#
Route AK
Hauling Ticket#
Destination
PO# 102596WA

Carrier SELF HAULER *
Vehicle# H20T
Container
Driver DON AVERY
Check#
Billing# 0000013
Grid

Volume

	Time	Scale	Operator	Inbound		
In	11/03/2011 15:06:50	SCALE 1	LMERCER		Gross	99380 lb
Out	11/03/2011 15:06:50		LMERCER		Tare	40560 lb
					Net	58820 lb
					Tons	29.41

Comments HARLOW - LM (V3647)

	Product	LD%	Qty	UOM	Rate	Tax	Amount	Origin
1	Daily Cover-PCS-Tons-Pet	100	29.41	Tons				KING
2	GONDOLA 16.10/TN-GONDOLA	100	29.41	Tons				

Total Tax
Total Ticket

203WM
Driver's Signature

WASTE MANAGEMENT

Alaska Street
70 S Alaska Street
Seattle, WA, 98134

Reprint
Ticket# 33853

Ph: 206 763 5025

Customer Name BOEING BOEING
Ticket Date 11/03/2011
Payment Type Credit Account
Manual Ticket#
Route AK
Hauling Ticket#
Destination
PO# 102596WA

Carrier SELF HAULER *
Vehicle# H12T
Volume
Container
Driver IRV PAULL
Check#
Billing# 0000013
Grid

	Time	Scale	Operator	Inbound		
In	11/03/2011 14:55:16	SCALE 1	LMERCER		Gross	98440 lb
Out	11/03/2011 14:55:16		LMERCER		Tare	41160 lb
					Net	57280 lb
					Tons	28.64

Comments HARLOW - LM (V3647)

	Product	LD%	Qty	UOM	Rate	Tax	Amount	Origin
1	Daily Cover-PCS-Tons-Pet	100	28.64	Tons				KING
2	GONDOLA 16.10/TN-GONDOLA	100	28.64	Tons				

Total Tax
Total Ticket

203WM
Driver's Signature

WASTE MANAGEMENT

Alaska Street
70 S Alaska Street
Seattle, WA, 98134

Reprint
Ticket# 33812

Ph: 206 763 5025

Customer Name BOEING BOEING
Ticket Date 11/03/2011
Payment Type Credit Account
Manual Ticket#
Route AK
Hauling Ticket#
Destination
PO# 102596WA

Carrier SELF HAULER *
Vehicle# H20T
Volume
Container
Driver DON AVERY
Check#
Billing# 0000013
Grid

	Time	Scale	Operator	Inbound		
In	11/03/2011 09:04:21	SCALE 1	LMERCER		Gross	101620 lb
Out	11/03/2011 09:04:21		LMERCER		Tare	40560 lb
					Net	61060 lb
					Tons	30.53

Comments HARLOW - LM (V3647)

	Product	LD%	Qty	UOM	Rate	Tax	Amount	Origin
1	Daily Cover-PCS-Tons-Pet	100	30.53	Tons				KING
2	GONDOLA 16.10/TN-GONDOLA	100	30.53	Tons				

Total Tax
Total Ticket

203WM

WASTE MANAGEMENT

Alaska Street
70 S Alaska Street
Seattle, WA, 98134

Reprint
Ticket# 33855

Ph: 206 763 5025

Customer Name BOEING BOEING
Ticket Date 11/03/2011
Payment Type Credit Account
Manual Ticket#
Route AK
Hauling Ticket#
Destination
PO# 102596WA

Carrier SELF HAULER *
Vehicle# H8
Volume
Container
Driver TIM ERSKINE
Check#
Billing# 0000013
Grid

	Time	Scale	Operator	Inbound		
In	11/03/2011 15:26:01	SCALE 1	LMERCER		Gross	106660 lb
Out	11/03/2011 15:26:01		LMERCER		Tare	41760 lb
					Net	64900 lb
					Tons	32.45

Comments HARLOW - LM (V3647)

	Product	LD%	Qty	UOM	Rate	Tax	Amount	Origin
1	Daily Cover-PCS-Tons-Pet	100	32.45	Tons				KING
2	GONDOLA 16.10/TN-GONDOLA	100	32.45	Tons				

Total Tax
Total Ticket

203WM
Driver's Signature

WASTE MANAGEMENT

Alaska Street
70 S Alaska Street
Seattle, WA, 98134

Reprint
Ticket# 33815

Ph: 206 763 5025

Customer Name BOEING BOEING
Ticket Date 11/03/2011
Payment Type Credit Account
Manual Ticket#
Route AK
Hauling Ticket#
Destination
PO# 102596WA

Carrier SELF HAULER *
Vehicle# H12T
Volume
Container
Driver IRV OAULL
Check#
Billing# 0000013
Grid

	Time	Scale	Operator	Inbound		
In	11/03/2011 09:26:50	SCALE 1	LMERCER		Gross	108960 lb
Out	11/03/2011 09:26:50		LMERCER		Tare	41160 lb
					Net	67800 lb
					Tons	33.90

Comments HARLOW - LM (V3647)

	Product	LD%	Qty	UOM	Rate	Tax	Amount	Origin
1	Daily Cover-PCS-Tons-Pet	100	33.90	Tons				KING
2	GONDOLA 16.10/TN-GONDOLA	100	33.90	Tons				

Total Tax
Total Ticket

203WM

Alaska Street
70 S Alaska Street
Seattle, WA, 98134

Original
Ticket# 33858

Ph: 206 763 5025

Customer Name BOEING BOEING
Ticket Date 11/04/2011
Payment Type Credit Account
Manual Ticket#
Route AK
Hauling Ticket#
Destination
PO# 102596WA

Carrier SELF HAULER *
Vehicle# H22S
Volume
Container
Driver FRED WALL
Check#
Billing# 0000013
Grid

	Time	Scale	Operator	Inbound		
In	11/04/2011 08:17:25	SCALE 1	LMERCER		Gross	48860 lb
Out	11/04/2011 08:24:52	SCALE 1	LMERCER		Tare	26740 lb
					Net	22120 lb
					Tons	11.06

Comments HARLOW - LM (V3647)

	Product	LD%	Qty	UOM	Rate	Tax	Amount	Origin
1	Daily Cover-PCS-Tons-Pet	100	11.06	Tons				KING
2	GONDOLA 16.10/TN-GONDOLA	100	11.06	Tons				KING

11-038

Total Tax
Total Ticket

203WM Driver's Signature

Alaska Street
70 S Alaska Street
Seattle, WA, 98134

Reprint
Ticket# 33860

Ph: 206 763 5025

Customer Name BOEING BOEING
Ticket Date 11/04/2011
Payment Type Credit Account
Manual Ticket#
Route AK
Hauling Ticket#
Destination
PO# 102596WA

Carrier SELF HAULER *
Vehicle# H22S
Volume
Container
Driver FRED WALL
Check#
Billing# 0000013
Grid

	Time	Scale	Operator	Inbound		
In	11/04/2011 08:53:52	SCALE 1	LMERCER		Gross	54020 lb
Out	11/04/2011 08:53:52		LMERCER		Tare	26740 lb
					Net	27280 lb
					Tons	13.64

Comments HARLOW - LM (V3647)

	Product	LD%	Qty	UOM	Rate	Tax	Amount	Origin
1	Daily Cover-PCS-Tons-Pet	100	13.64	Tons				KING
2	GONDOLA 16.10/TN-GONDOLA	100	13.64	Tons				

11-038

Total Tax
Total Ticket

203WM Driver's Signature

Alaska Street
70 S Alaska Street
Seattle, WA, 98134

Original
Ticket# 33859

Ph: 206 763 5025

Customer Name BOEING BOEING
Ticket Date 11/04/2011
Payment Type Credit Account
Manual Ticket#
Route AK
Hauling Ticket#
Destination
PO# 102596WA

Carrier SELF HAULER *
Vehicle# H21S
Volume
Container
Driver GEORGE PALADIN
Check#
Billing# 0000013
Grid

	Time	Scale	Operator	Inbound		
In	11/04/2011 08:23:10	SCALE 1	LMERCER		Gross	53900 lb
Out	11/04/2011 08:29:19	SCALE 1	LMERCER		Tare	26900 lb
					Net	27000 lb
					Tons	13.50

Comments HARLOW - LM (V3647)

	Product	LD%	Qty	UOM	Rate	Tax	Amount	Origin
1	Daily Cover-PCS-Tons-Pet	100	13.50	Tons				KING
2	GONDOLA 16.10/TN-GONDOLA	100	13.50	Tons				KING

11-038

Total Tax
Total Ticket

203WM
Driver's Signature

Alaska Street
70 S Alaska Street
Seattle, WA, 98134

Original
Ticket# 33861

Ph: 206 763 5025

Customer Name BOEING BOEING
Ticket Date 11/04/2011
Payment Type Credit Account
Manual Ticket#
Route AK
Hauling Ticket#
Destination
PO# 102596WA

Carrier SELF HAULER *
Vehicle# H21S
Volume
Container
Driver GEORGE PALADIN
Check#
Billing# 0000013
Grid

	Time	Scale	Operator	Inbound		
In	11/04/2011 09:01:16	SCALE 1	LMERCER		Gross	55600 lb
Out	11/04/2011 09:01:16		LMERCER		Tare	26900 lb
					Net	28700 lb
					Tons	14.35

Comments HARLOW - LM (V3647)

	Product	LD%	Qty	UOM	Rate	Tax	Amount	Origin
1	Daily Cover-PCS-Tons-Pet	100	14.35	Tons				KING
2	GONDOLA 16.10/TN-GONDOLA	100	14.35	Tons				

11-038

Total Tax
Total Ticket

Alaska Street
70 S Alaska Street
Seattle, WA, 98134

Original
Ticket# 33862

Ph: 206 763 5025

Customer Name BOEING BOEING
Ticket Date 11/04/2011
Payment Type Credit Account
Manual Ticket#
Route AK
Hauling Ticket#
Destination
PO# 102596WA

Carrier SELF HAULER *
Vehicle# H22S
Volume
Container
Driver FRED WALL
Check#
Billing# 0000013
Grid

	Time	Scale	Operator	Inbound		
In	11/04/2011 09:26:59	SCALE 1	LMERCER		Gross	50440 lb
Out	11/04/2011 09:26:59		LMERCER		Tare	26740 lb
					Net	23700 lb
					Tons	11.85

Comments HARLOW - LM (V3647)

	Product	LD%	Qty	UOM	Rate	Tax	Amount	Origin
1	Daily Cover-PCS-Tons-Pet	100	11.85	Tons				KING
2	GONDOLA 16.10/TN-GONDOLA	100	11.85	Tons				

11-038

Total Tax
Total Ticket

100WM Driver's Signature

Alaska Street
70 S Alaska Street
Seattle, WA, 98134

Original
Ticket# 33865

Ph: 206 763 5025

Customer Name BOEING BOEING
Ticket Date 11/04/2011
Payment Type Credit Account
Manual Ticket#
Route AK
Hauling Ticket#
Destination
PO# 102596WA

Carrier SELF HAULER *
Vehicle# H22S
Volume
Container
Driver FRED WALL
Check#
Billing# 0000013
Grid

	Time	Scale	Operator	Inbound		
In	11/04/2011 10:04:06	SCALE 1	LMERCER		Gross	51380 lb
Out	11/04/2011 10:04:06		LMERCER		Tare	26740 lb
					Net	24640 lb
					Tons	12.32

Comments HARLOW - LM (V3647)

	Product	LD%	Qty	UOM	Rate	Tax	Amount	Origin
1	Daily Cover-PCS-Tons-Pet	100	12.32	Tons				KING
2	GONDOLA 16.10/TN-GONDOLA	100	12.32	Tons				KING

11-038

Total Tax
Total Ticket

203WM Driver's Signature

Alaska Street
70 S Alaska Street
Seattle, WA, 98134

Original
Ticket# 33864

Ph: 206 763 5025

Customer Name BOEING BOEING
Ticket Date 11/04/2011
Payment Type Credit Account
Manual Ticket#
Route AK
Hauling Ticket#
Destination
PO# 102596WA

Carrier SELF HAULER *
Vehicle# H21S
Volume
Container
Driver GEORGE PALADIN
Check#
Billing# 0000013
Grid

	Time	Scale	Operator	Inbound		
In	11/04/2011 09:39:57	SCALE 1	LMERCER		Gross	54080 lb
Out	11/04/2011 09:39:57		LMERCER		Tare	26900 lb
					Net	27180 lb
					Tons	13.59

Comments HARLOW - ~~LM (V3647)~~

	Product	LD%	Qty	UOM	Rate	Tax	Amount	Origin
1	Daily Cover-PCS-Tons-Pet	100	13.59	Tons				KING
2	GONDOLA 16.10/TN-GONDOLA	100	13.59	Tons				KING

11-038

Total Tax
Total Ticket

203WM
Driver's Signature

Alaska Street
70 S Alaska Street
Seattle, WA, 98134

Original
Ticket# 33866

Ph: 206 763 5025

Customer Name BOEING BOEING
Ticket Date 11/04/2011
Payment Type Credit Account
Manual Ticket#
Route AK
Hauling Ticket#
Destination
PO# 102596WA

Carrier SELF HAULER *
Vehicle# H21S
Volume
Container
Driver GEORGE PALADIN
Check#
Billing# 0000013
Grid

	Time	Scale	Operator	Inbound		
In	11/04/2011 10:15:32	SCALE 1	LMERCER		Gross	51280 lb
Out	11/04/2011 10:15:32		LMERCER		Tare	26900 lb
					Net	24380 lb
					Tons	12.19

Comments HARLOW - LM ~~(V3647)~~ V3647 2nd

	Product	LD%	Qty	UOM	Rate	Tax	Amount	Origin
1	Daily Cover-PCS-Tons-Pet	100	12.19	Tons				KING
2	GONDOLA 16.10/TN-GONDOLA	100	12.19	Tons				KING

11-038

Total Tax
Total Ticket

203WM
Driver's Signature

Alaska Street
70 S Alaska Street
Seattle, WA, 98134

Original
Ticket# 33869

Ph: 206 763 5025

Customer Name BOEING BOEING
Ticket Date 11/04/2011
Payment Type Credit Account
Manual Ticket#
Route AK
Hauling Ticket#
Destination
PO# 102596WA

Carrier SELF HAULER *
Vehicle# H22S
Volume
Container
Driver FRED WALL
Check#
Billing# 0000013
Grid

	Time	Scale	Operator	Inbound		
In	11/04/2011 10:47:54	SCALE 1	LMERCER		Gross	51140 lb
Out	11/04/2011 10:47:54		LMERCER		Tare	26740 lb
					Net	24400 lb
					Tons	12.20

Comments HARLOW - LM (V3647)

	Product	LD%	Qty	UOM	Rate	Tax	Amount	Origin
1	Daily Cover-PCS-Tons-Pet	100	12.20	Tons				KING
2	GONDOLA 16.10/TN-GONDOLA	100	12.20	Tons				KING

11-038

Total Tax
Total Ticket

203WM
Driver's Signature

WASTE MANAGEMENT

Alaska Street
70 S Alaska Street
Seattle, WA, 98134

Reprint
Ticket# 34017

Ph: 206 763 5025

Customer Name BOEING BOEING
Ticket Date 11/10/2011
Payment Type Credit Account
Manual Ticket#
Route AK
Hauling Ticket#
Destination
PO# 102596WA

Carrier SELF HAULER *
Vehicle# H20
Volume
Container
Driver DON AVERY
Check#
Billing# 0000013
Grid

	Time	Scale	Operator	Inbound		
In	11/10/2011 09:58:13	SCALE 1	lmercer		Gross	53880 lb
Out	11/10/2011 09:58:13		lmercer		Tare	25500 lb
					Net	28380 lb
					Tons	14.19

Comments HARLOW - LM (V3712)

	Product	LD%	Qty	UOM	Rate	Tax	Amount	Origin
1	Daily Cover-PCS-Tons-Pet	100	14.19	Tons				KING
2	GONDOLA 16.10/TN-GONDOLA	100	14.19	Tons				KING

Total Tax
Total Ticket

203WM Driver's Signature

WASTE MANAGEMENT

Alaska Street
70 S Alaska Street
Seattle, WA, 98134

Reprint
Ticket# 34014

Ph: 206 763 5025

Customer Name BOEING BOEING
Ticket Date 11/10/2011
Payment Type Credit Account
Manual Ticket#
Route AK
Hauling Ticket#
Destination
PO# 102596WA

Carrier SELF HAULER *
Vehicle# H20
Volume
Container
Driver DON AVERY
Check#
Billing# 0000013
Grid

	Time	Scale	Operator	Inbound		
In	11/10/2011 09:25:44	SCALE 1	lmercer		Gross	51300 lb
Out	11/10/2011 09:25:44		lmercer		Tare	25500 lb
					Net	25800 lb
					Tons	12.90

Comments HARLOW - LM (V3712)

	Product	LD%	Qty	UOM	Rate	Tax	Amount	Origin
1	Daily Cover-PCS-Tons-Pet	100	12.90	Tons				KING
2	GONDOLA 16.10/TN-GONDOLA	100	12.90	Tons				KING

Total Tax
Total Ticket

203WM Driver's Signature

WASTE MANAGEMENT

Alaska Street
70 S Alaska Street
Seattle, WA, 98134

Reprint
Ticket# 34022

Ph: 206 763 5025

Customer Name BOEING BOEING
Ticket Date 11/10/2011
Payment Type Credit Account
Manual Ticket#
Route AK
Hauling Ticket#
Destination
PO# 102596WA

Carrier SELF HAULER *
Vehicle# H20
Container
Driver DON AVERY
Check#
Billing# 0000013
Grid

Volume

	Time	Scale	Operator	Inbound		
In	11/10/2011 10:55:38	SCALE 1	lmercer		Gross	51440 lb
Out	11/10/2011 10:55:38		lmercer		Tare	25500 lb
					Net	25940 lb
					Tons	12.97

Comments HARLOW - LM (V3712)

	Product	LD%	Qty	UOM	Rate	Tax	Amount	Origin
1	Daily Cover-PCS-Tons-Pet	100	12.97	Tons				KING
2	GONDOLA 16.10/TN-GONDOLA	100	12.97	Tons				

Total Tax
Total Ticket

203WM Driver's Signature

WASTE MANAGEMENT

Alaska Street
70 S Alaska Street
Seattle, WA, 98134

Reprint
Ticket# 34019

Ph: 206 763 5025

Customer Name BOEING BOEING
Ticket Date 11/10/2011
Payment Type Credit Account
Manual Ticket#
Route AK
Hauling Ticket#
Destination
PO# 102596WA

Carrier SELF HAULER *
Vehicle# H20
Container
Driver DON AVERY
Check#
Billing# 0000013
Grid

Volume

	Time	Scale	Operator	Inbound		
In	11/10/2011 10:26:55	SCALE 1	lmercer		Gross	54120 lb
Out	11/10/2011 10:26:55		lmercer		Tare	25500 lb
					Net	28620 lb
					Tons	14.31

Comments HARLOW - LM (V3712)

	Product	LD%	Qty	UOM	Rate	Tax	Amount	Origin
1	Daily Cover-PCS-Tons-Pet	100	14.31	Tons				KING
2	GONDOLA 16.10/TN-GONDOLA	100	14.31	Tons				

Total Tax
Total Ticket

203WM Driver's Signature

WASTE MANAGEMENT

Alaska Street
70 S Alaska Street
Seattle, WA, 98134

Reprint
Ticket# 34033
Ph: 206 763 5025

Customer Name BOEING BOEING
Ticket Date 11/10/2011
Payment Type Credit Account
Manual Ticket#
Route AK
Hauling Ticket#
Destination
PO# 102596WA

Carrier SELF HAULER *
Vehicle# H20
Volume
Container
Driver DON AVERY
Check#
Billing# 0000013
Grid

	Time	Scale	Operator	Inbound		
In	11/10/2011 12:12:18	SCALE 1	lmercer		Gross	51540 lb
Out	11/10/2011 12:12:18		lmercer		Tare	25500 lb
					Net	26040 lb
					Tons	13.02

Comments HARLOW - LM (V3712)

	Product	LD%	Qty	UOM	Rate	Tax	Amount	Origin
1	Daily Cover-PCS-Tons-Pet	100	13.02	Tons				KING
2	GONDOLA 16.10/TN-GONDOLA	100	13.02	Tons				

Total Tax
Total Ticket

203WM
Driver's Signature

WASTE MANAGEMENT

Alaska Street
70 S Alaska Street
Seattle, WA, 98134

Reprint
Ticket# 34029
Ph: 206 763 5025

Customer Name BOEING BOEING
Ticket Date 11/10/2011
Payment Type Credit Account
Manual Ticket#
Route AK
Hauling Ticket#
Destination
PO# 102596WA

Carrier SELF HAULER *
Vehicle# H20
Volume
Container
Driver DON AVERY
Check#
Billing# 0000013
Grid

	Time	Scale	Operator	Inbound		
In	11/10/2011 11:37:48	SCALE 1	lmercer		Gross	49840 lb
Out	11/10/2011 11:37:48		lmercer		Tare	25500 lb
					Net	24340 lb
					Tons	12.17

Comments HARLOW YE

	Product	LD%	Qty	UOM	Rate	Tax	Amount	Origin
1	Daily Cover-PCS-Tons-Pet	100	12.17	Tons				KING
2	GONDOLA 16.10/TN-GONDOLA	100	12.17	Tons				KING

Total Tax
Total Ticket

203WM
Driver's Signature

WASTE MANAGEMENT

Alaska Street
70 S Alaska Street
Seattle, WA, 98134

Reprint
Ticket# 34037

Ph: 206 763 5025

Customer Name BOEING BOEING
Ticket Date 11/10/2011
Payment Type Credit Account
Manual Ticket#
Route AK
Hauling Ticket#
Destination
PO# 102596WA

Carrier SELF HAULER *
Vehicle# H20
Container
Driver DON AVERY
Check#
Billing# 0000013
Grid

Volume

	Time	Scale	Operator	Inbound		
In	11/10/2011 13:13:38	SCALE 1	lmercer		Gross	50720 lb
Out	11/10/2011 13:13:38		lmercer		Tare	25500 lb
					Net	25220 lb
					Tons	12.61

Comments HARLOW - LM (V3712)

	Product	LD%	Qty	UOM	Rate	Tax	Amount	Origin
1	Daily Cover-PCS-Tons-Pet	100	12.61	Tons				KING
2	GONDOLA 16.10/TN-GONDOLA	100	12.61	Tons				KING

Total Tax
Total Ticket

203WM

WASTE MANAGEMENT

Alaska Street
70 S Alaska Street
Seattle, WA, 98134

Reprint
Ticket# 34035

Ph: 206 763 5025

Customer Name BOEING BOEING
Ticket Date 11/10/2011
Payment Type Credit Account
Manual Ticket#
Route AK
Hauling Ticket#
Destination
PO# 102596WA

Carrier SELF HAULER *
Vehicle# H20
Container
Driver DON AVERY
Check#
Billing# 0000013
Grid

Volume

	Time	Scale	Operator	Inbound		
In	11/10/2011 12:42:01	SCALE 1	lmercer		Gross	50400 lb
Out	11/10/2011 12:42:01		lmercer		Tare	25500 lb
					Net	24900 lb
					Tons	12.45

Comments HARLOW - LM (V3712)

	Product	LD%	Qty	UOM	Rate	Tax	Amount	Origin
1	Daily Cover-PCS-Tons-Pet	100	12.45	Tons				
2	GONDOLA 16.10/TN-GONDOLA	100	12.45	Tons				KING

Total Tax
Total Ticket

203WM Driver's Signature

WASTE MANAGEMENT

Alaska Street
70 S Alaska Street
Seattle, WA, 98134

Reprint
Ticket# 34043
Ph: 206 763 5025

Customer Name BOEING BOEING
Ticket Date 11/10/2011
Payment Type Credit Account
Manual Ticket#
Route AK
Hauling Ticket#
Destination
PO# 102596WA

Carrier SELF HAULER *
Vehicle# H20T
Volume
Container
Driver DON AVERY
Check#
Billing# 0000013
Grid

	Time	Scale	Operator	Inbound		
In	11/10/2011 14:31:43	SCALE 1	lmercer		Gross	98280 lb
Out	11/10/2011 14:31:43		lmercer		Tare	40560 lb
					Net	57720 lb
					Tons	28.86

Comments HARLOW - LM (V3712)

	Product	LD%	Qty	UOM	Rate	Tax	Amount	Origin
1	Daily Cover-PCS-Tons-Pet	100	28.86	Tons				KING
2	GONDOLA 16.10/TN-GONDOLA	100	28.86	Tons				

Total Tax
Total Ticket

203WM Driver's Signature

WASTE MANAGEMENT

Alaska Street
70 S Alaska Street
Seattle, WA, 98134

Reprint
Ticket# 34039
Ph: 206 763 5025

Customer Name BOEING BOEING
Ticket Date 11/10/2011
Payment Type Credit Account
Manual Ticket#
Route AK
Hauling Ticket#
Destination
PO# 102596WA

Carrier SELF HAULER *
Vehicle# H20
Volume
Container
Driver DON AVERY
Check#
Billing# 0000013
Grid

	Time	Scale	Operator	Inbound		
In	11/10/2011 13:42:39	SCALE 1	lmercer		Gross	49540 lb
Out	11/10/2011 13:42:39		lmercer		Tare	25500 lb
					Net	24040 lb
					Tons	12.02

Comments HARLOW - LM (V3712)

	Product	LD%	Qty	UOM	Rate	Tax	Amount	Origin
1	Daily Cover-PCS-Tons-Pet	100	12.02	Tons				KING
2	GONDOLA 16.10/TN-GONDOLA	100	12.02	Tons				

Total Tax
Total Ticket

203WM Driver's Signature

WASTE MANAGEMENT

Alaska Street
70 S Alaska Street
Seattle, WA, 98134

Reprint
Ticket# 34050

Ph: 206 763 5025

Customer Name BOEING BOEING
Ticket Date 11/11/2011
Payment Type Credit Account
Manual Ticket#
Route AK
Hauling Ticket#
Destination
PO# 102596WA

Carrier SELF HAULER *
Vehicle# H8
Volume
Container
Driver TIM ERSKINE
Check# .
Billing# 0000013
Grid

	Time	Scale	Operator	Inbound		
In	11/11/2011 08:17:49	SCALE 1	lmercer		Gross	103980 lb
Out	11/11/2011 08:17:49		lmercer		Tare	41760 lb
					Net	62220 lb
					Tons	31.11

Comments HARLOW - LM (V3712)

	Product	LD%	Qty	UOM	Rate	Tax	Amount	Origin
1	Daily Cover-PCS-Tons-Pet	100	31.11	Tons				KING
2	GONDOLA 16.10/TN-GONDOLA	100	31.11	Tons				

Total Tax
Total Ticket

203WM Driver's Signature

WASTE MANAGEMENT

Alaska Street
70 S Alaska Street
Seattle, WA, 98134

Reprint
Ticket# 34056

Ph: 206 763 5025

Customer Name BOEING BOEING
Ticket Date 11/11/2011
Payment Type Credit Account
Manual Ticket#
Route AK
Hauling Ticket#
Destination
PO# 102596WA

Carrier SELF HAULER *
Vehicle# H8
Volume
Container
Driver TIM ERSKINE
Check#
Billing# 0000013
Grid

	Time	Scale	Operator	Inbound		
In	11/11/2011 09:05:52	SCALE 1	lmercer		Gross	110260 lb
Out	11/11/2011 09:05:52		lmercer		Tare	41760 lb
					Net	68500 lb
					Tons	34.25

Comments HARLOW - LM (V3712)

	Product	LD%	Qty	UOM	Rate	Tax	Amount	Origin
1	Daily Cover-PCS-Tons-Pet	100	34.25	Tons				KING
2	GONDOLA 16.10/TN-GONDOLA	100	34.25	Tons				KING

Total Tax
Total Ticket

203WM Driver's Signature

WASTE MANAGEMENT

Alaska Street
70 S Alaska Street
Seattle, WA, 98134

Reprint
Ticket# 34062

Ph: 206 763 5025

Customer Name BOEING BOEING
Ticket Date 11/11/2011
Payment Type Credit Account
Manual Ticket#
Route AK
Hauling Ticket#
Destination
PO# 102596WA

Carrier SELF HAULER *
Vehicle# H8
Volume
Container
Driver TIM ERSKINE
Check#
Billing# 0000013
Grid

	Time	Scale	Operator	Inbound		
In	11/11/2011 09:55:47	SCALE 1	lmercer		Gross	100060 lb
Out	11/11/2011 09:55:47		lmercer		Tare	41760 lb
					Net	58300 lb
					Tons	29.15

Comments HARLOW - LM (V3712)

	Product	LD%	Qty	UOM	Rate	Tax	Amount	Origin
1	Daily Cover-PCS-Tons-Pet	100	29.15	Tons				KING
2	GONDOLA 16.10/TN-GONDOLA	100	29.15	Tons				KING

Total Tax
Total Ticket

203WM
Driver's Signature

WASTE MANAGEMENT

Alaska Street
70 S Alaska Street
Seattle, WA, 98134

Reprint
Ticket# 34069

Ph: 206 763 5025

Customer Name BOEING BOEING
Ticket Date 11/11/2011
Payment Type Credit Account
Manual Ticket#
Route AK
Hauling Ticket#
Destination
PO# 102596WA

Carrier SELF HAULER *
Vehicle# H8
Volume
Container
Driver TIM ERSKINE
Check#
Billing# 0000013
Grid

	Time	Scale	Operator	Inbound		
In	11/11/2011 10:49:39	SCALE 1	lmercer		Gross	78700 lb
Out	11/11/2011 10:49:39		lmercer		Tare	41760 lb
					Net	36940 lb
					Tons	18.47

Comments HARLOW - LM (V3712)

	Product	LD%	Qty	UOM	Rate	Tax	Amount	Origin
1	Daily Cover-PCS-Tons-Pet	100	18.47	Tons				KING
2	GONDOLA 16.10/TN-GONDOLA	100	18.47	Tons				

Total Tax
Total Ticket

203WM
Driver's Signature

APPENDIX J

Contractor Specifications for Green Remediation Practices

EXHIBIT I
SPECIAL CONDITIONS
May 31, 2011

1) Green Policy: The contractor shall use technologies and practices that are sustainable in accordance with EPA Region 10 Green Cleanups (http://yosemite.epa.gov/R10/extaff.nsf/programs/greencleanups), with the exception of the use of concrete utilizing coal combustion products (see EPA suspension of coal combustion products partnership program, http://www.epa.gov/osw/partnerships/c2p2/index.htm). The contractor shall report on the use of these technologies and practices, including the associated quantities of materials reduced, reused, or recycled as a direct result of these practices, for all remedial activities conducted under this contract after project completion.

2) Cleaner fuels, diesel emissions controls and retrofits, and emission reduction strategies: For diesel powered equipment exceeding 50 hp. the contractor will utilize construction equipment rented from a local supplier, and will request the rental of construction equipment meeting Tier 4 standards. If Tier 4 construction equipment is not available, equipment will be requested that meets the at least the Tier 3 standards. If equipment meeting Tier 4 or Tier 3 standards is not available, then other equipment may be considered if the emission devices are added such as oxidation catalysts and/or particulate filters. Equipment with a higher tier emission standard will not be used if the only available selection is larger equipment that would use more fuel or result in a higher rate of emissions.

3) Clean Fuel: Cleaner fuels will be used in all diesel powered equipment. Diesel fuels to be used may include biodiesel blends (e.g. B5 or B20) or ultra-low sulfur (ULS) diesel.

4) Greenhouse gas emission reduction technologies: Diesel powered equipment should be used where available instead of gas powered equipment. The Contractor shall minimize idling to control air pollution and reduce fuel usage. This shall include turning off all diesel engines on construction equipment greater than 50 horsepower when not in active use (e.g., on standby for greater than five minutes).

5) Water conservation and efficiency: If water consumption is necessary (e.g. for dust suppression), water conservation measures will be utilized where feasible.

6) Industrial material reuse or recycling within regulatory requirements: Where feasible, the contractor shall recycle all scrap construction materials, wastes from the construction trailer, and other materials generated during the course of construction activities.

7) Environmentally Preferable Purchasing – Where available, all materials purchased will have Post Consumer Recycled Content (PCR). Ductile Iron pipe and fittings shall be made from 85-90% recycled metals.

8) Environmental Management System (EMS): Practices such as reducing the use of paper by utilizing electronic transmittal of project documents and implementation of waste reduction and recycling programs at the work site shall be implemented.

9) The Contractor shall purchase and use local materials (such as asphalt and backfill material) where available.