Annual Performance Evaluation Report
Long-Term Stormwater Treatment - 2013-2014
North Boeing Field
Seattle, Washington

February 19, 2015

Prepared for

The Boeing Company
Seattle, Washington

LANDAU ASSOCIATES
130 2nd Avenue South
Edmonds, WA 98020
(425) 778-0907

TABLE OF CONTENTS

		Page
1.0	INTRODUCTION	1-1
1.1	PROJECT SITE DESCRIPTION	1-1
1.2	PROJECT BACKGROUND	1-2
1.3	LTST TREATMENT SYSTEM DESIGN	1-3
1.4	PERFORMANCE STANDARDS AND CLEANUP GOALS	1-4
1.4.1	LTST System Performance Standards	1-4
1.4.2	LTST Treatment Goals	1-5
2.0	SAMPLE AND DATA COLLECTION METHODOLOGY	2-1
2.1	SAMPLING OBJECTIVES	2-1
2.2	SAMPLING LOCATIONS	2-1
2.3	LIFT STATION (LS431)	2-2
2.3.1	Sampling Frequency	2-2
2.3.2	Sampling and Data Collection Methods	2-3
2.3.3	Laboratory Analyses	2-4
2.4	LONG-TERM STORMWATER TREATMENT SYSTEM SAMPLING	2-5
2.4.1	Sampling Frequency	2-5
2.4.2	Sampling and Data Collection Methods – Whole Water	2-5
2.4.3	Sampling and Data Collection Methods – Filtered Solids	2-6
2.4.4	Laboratory Analyses	2-6
2.5	WEIR TANK, STORAGE TANK, AND SAND FILTER MEDIA MONITORING AND SAMPLING	2-7
2.6	SEDIMENT TRAPS	2-8
2.6.1	Sampling Frequency	2-8
2.6.2	Sampling Methods	2-8
2.6.3	Laboratory Analyses	2-9
2.7	RE-ROUTED KING COUNTY STORMWATER	2-9
2.8	CATCH BASIN INSERT FILTER REPLACEMENT	2-9
3.0	MONITORING RESULTS	3-1
3.1	LS431 AND LTST PERFORMANCE ANALYTICAL RESULTS	3-1
3.1.1	PCBs in Whole Water	3-1
3.1.2	TSS and PSD in Whole Water	3-2
3.1.3	SVOCs in Whole Water	3-2
3.1.4	Metals in Whole Water	3-3
3.1.5	PCBs in Filtered Solids	3-4
3.2	SUMMARY OF FLOW MEASUREMENTS AND PRECIPITATION DATA	3-4
3.3	SEDIMENT TRAP SAMPLING RESULTS	3-5
3.4	CATCH BASIN INSERT FILTER SOLIDS SAMPLING RESULTS	3-6
4.0	EVALUATION OF LTST PERFORMANCE	4-1
4.1	LTST SYSTEM AND POINT OF COMPLIANCE	4-1
4.2	VALIDITY OF ASSUMPTIONS	4-2
4.2.1	Non-Detect Results	4-2
4.2.2	Other Assumptions Used to Calculate the Alternative Interim Goal	4-3
5.0	USE OF THIS REPORT	5-1
6.0	REFERENCES	6-1

FIGURES

Figure	Title
1	Vicinity Map
2	North Boeing Field Stormwater Drainage Basins
3	LSIV Section Showing Pump On/Off Settings
4	Schematic Diagram of LTST System Components
5	Storm Drain System and LTST Sampling Locations
6	LTST Sampling Locations

TABLES

Table	Title
1	Summary of 2013-2014 LTST Stormwater Sampling Events
2	LS431 Whole Water Sampling Analytical Results
3	MH130A Whole Water Sampling Analytical Results
4	LSIV Whole Water Sampling Analytical Results
5	Effluent Whole Water Sampling Analytical Results
6	MH130A Stormwater Filtration and PCB Testing Results
7	LSIV Stormwater Filtration and PCB Testing Results
8	Effluent Stormwater Filtration and PCB Testing Results
9	Bypass During 2013-2014 Sampling Events
10	Monthly Precipitation and Flow Volumes
11	Storm Drain Manhole Solids and Sediment Trap Analytical Data
12	Storm Drain Sediment Trap PCB Mass Loading Rate
13	PCB Analytical Results, Catch Basin Filtered Solids Samples

APPENDICES

Appendix	Title
A	Year 3 Monitoring (November 1, 2013 through October 31, 2014) and FWAAC Results and Recommendations for NBF LTST System
B	LTST 2015 Sampling and Analysis Plan Addendum

LIST OF ABBREVIATIONS AND ACRONYMS

µg/L	Micrograms per Liter
µm	Micron
AKART	All Known, Available, and Reasonable Methods of Prevention, Control, and Treatment
ASAOC	Administrative Settlement Agreement and Order on Consent
Boeing	The Boeing Company
CERCLA	Comprehensive Environmental Response, Compensation, and Liability Act
CESF	Chitosan-Enhanced Sand Filtration
City	City of Seattle
EAA	Early Action Area
Ecology	Washington State Department of Ecology
EOF	Emergency Overflow
EPA	U.S. Environmental Protection Agency
FSP	Field Sampling Plan
FWAAC	Flow-Weighted Average Annual Concentration
ft	Feet
gpm	Gallons per Minute
GTSP	Georgetown Steam Plant
g/yr	Grams per Year
hp	Horsepower
KBFI	Seattle Boeing Field-King County International Airport Rain Gauge
KCIA	King County International Airport
kWh	Kilowatt Hours
LDW	Lower Duwamish Waterway
ISGP	Industrial Stormwater General Permit
LOD	Limit of Detection
LOQ	Limit of Quantitation
LSIV	Lift Station Inlet Vault
LTST	Long-Term Stormwater Treatment
mg/kg	Milligrams per Kilogram
mg/L	Milligrams per Liter
mL	Milliliter
NBF	North Boeing Field
NPDES	National Pollutant Discharge Elimination System
NPL	National Priorities List
PAHs	Polycyclic Aromatic Hydrocarbons
Panel	NBF Stormwater Expert Panel
PCBs	Polychlorinated Biphenyls
POC	Point of Compliance
ppb	Parts per Billion
ppm	Parts per Million
PSD	Particle Size Distribution
PSDDA	Puget Sound Dredged Disposal Analysis
PSEP	Puget Sound Estuary Program
QAPP	Quality Assurance Project Plan
RAWP	Removal Action Work Plan
RI	Remedial Investigation
SAP	Sampling and Analysis Plan
SIM	Selected Ion Monitoring
STST	Short-Term Stormwater Treatment
SVOCs	Semivolatile Organic Compounds
TAPE	Technology Assessment Protocol
TCLP	Toxicity Characteristic Leaching Procedure
TOC	Total Organic Carbon
TSS	Total Suspended Solids

1.0 INTRODUCTION

This document presents an annual performance evaluation of long-term stormwater treatment (LTST) at North Boeing Field (NBF) for the third year of system operation, covering the period from November 1, 2013 through October 31, 2014. This annual performance evaluation report follows the planned annual evaluation criteria described in the *Sampling and Analysis Plan for Long-Term Stormwater Treatment* (SAP; Landau Associates 2012a). The conclusion of this annual evaluation is that the monitoring procedures outlined in the SAP and the Sampling and Analysis Plan Addendum (SAP Addendum; Landau Associates 2014a) were followed and the LTST system met the applicable interim goals for removal of polychlorinated biphenyls (PCBs) and discharge water quality, as described in detail in this report.

A figure showing the vicinity of the site is provided for reference as Figure 1. The U.S. Environmental Protection Agency (EPA) and Washington State Department of Ecology (Ecology) have been working with The Boeing Company (Boeing); the city of Seattle (City), Washington; and King County to eliminate sources of PCBs in stormwater discharges to Slip 4 of the Lower Duwamish Waterway (LDW). On September 23, 2010, the EPA issued an *Action Memorandum for the Time-Critical Removal Action at North Boeing Field near the Slip 4 Early Action Area of the Lower Duwamish Waterway Superfund Site* (Action Memorandum; EPA 2010). On September 29, 2010, Boeing entered into an Administrative Settlement Agreement and Order on Consent for Removal Action (ASAOC) with the EPA (EPA and Boeing 2010). The ASAOC required that Boeing address the discharge of PCBs to the Slip 4 Early Action Area (EAA) through short-term and long-term stormwater treatment removal actions.

The LTST system has been functional and operational since October 28, 2011, and consists of a chitosan-enhanced sand filtration (CESF) system that preferentially treats storm flows from the onsite NBF North Lateral, while also treating storm drain base flow and a portion of all the storm flow that drains to the lift station and to Slip 4 (Figure 2). For the 2013-2014 year of operations, monitoring of LTST system performance and compliance with LTST interim goals from the Action Memorandum (EPA 2010) has been conducted according to the SAP Addendum.

1.1 PROJECT SITE DESCRIPTION

NBF is located east of East Marginal Way South, adjacent to the King County International Airport (KCIA) and the City's Georgetown Steam Plant (GTSP). The approximate street address is 7370 East Marginal Way South, Seattle, Washington. NBF is approximately 150 feet (ft) from the head

of Slip 4, which is an EAA at approximately River Mile 2.8 on the Duwamish Waterway within the LDW Superfund Site. The location of the site is shown on Figure 1.

1.2 PROJECT BACKGROUND

Boeing has conducted operations at NBF since the 1940s. NBF is used for research, flight testing, aircraft finishing, and delivery facilities. Stormwater from NBF is collected and conveyed by storm drains to Slip 4 of the LDW. In 2001, the LDW was placed on the National Priorities List (NPL: Superfund) pursuant to the Comprehensive Environmental Response, Compensation, and Liability Act (CERCLA). In 2003, the sediments and portions of the bank in Slip 4 were identified as an EAA due to the presence of PCBs in the sediment. Prior to cleanup of Slip 4, Ecology determined that ongoing sources of PCBs discharging to Slip 4 should be controlled to reduce the likelihood of recontamination of the sediment following cleanup. Previous investigations at the NBF site identified the presence of PCBs in solids in manholes, catch basins, and sediment traps, and in water in the NBF storm drain system, which discharges to Slip 4 via the KCIA Storm Drain #3 PS44 Emergency Overflow (EOF).

As defined in the ASAOC, "stormwater" shall mean all liquids, including any particles dissolved therein, in the form of base flow, stormwater runoff, snow melt runoff, and surface runoff and drainage, as well as all solids that enter the storm drainage system. "System," when used in the context of storm drainage, shall mean the combination of all manholes, catch basins, pipes, and other drainage devices and conveyances designed, constructed, and used for the purpose of carrying stormwater from NBF to Slip 4 of the LDW, and the drainage basin associated with these devices and conveyances.

The highest concentrations of PCBs in stormwater in the NBF storm drain system (which discharges to Slip 4) were previously identified to be from the North Lateral portion of the storm drain (SAIC 2011; Landau Associates 2011a). Under the ASAOC, Boeing installed a short-term stormwater treatment (STST) facility to remove PCBs from a large portion of the North Lateral of the NBF storm drain system prior to discharge to Slip 4 (Landau Associates 2010, 2011a). The STST facility, consisting of a 500-gallon per minute (gpm)-capacity CESF system, was placed into continuous operation on September 15, 2010 and operation continued until the 1,500-gpm LTST facility was installed and operating. STST monitoring results, available in the November 2011 Progress Report (Landau Associates 2011b), demonstrate that CESF was very effective at reducing the mass of total suspended solids (TSS) and PCBs in stormwater. Therefore, the LTST facility was designed around a similar CESF system, although significantly larger in footprint and capacity.

Operation of the LTST facility officially began on October 28, 2011. To provide the estimated 200,000 kilowatt-hours (kWh) required to operate the LTST system for each year of operation, Boeing continues to purchase 100 percent renewable energy through the Seattle City Light *Green Up* program.

Monitoring, as described in the SAP Addendum (Landau Associates 2014a), is ongoing at the LTST facility. The 2011-2012 and 2012-2013 Annual Evaluation Reports (Landau Associates 2013 and 2014b) concluded that the LTST system met the LTST interim goals from the Action Memorandum (EPA 2010).

1.3 LTST TREATMENT SYSTEM DESIGN

The CESF treatment process starts by settling out coarse solids in an aboveground settling/storage tank, then the coagulated solids [via chitosan acetate dosage (less than 1 part per million {ppm} of chitosan acetate solution containing the natural biopolymer chitin)] settle out in additional aboveground settling/storage tanks and, finally, sand filtration (through a bank of sand filter units) removes the remaining coagulated solids. The sand filter units are automated to perform sequential backflushing. The backflush water discharges to a settling tank and the settled solids are removed periodically for disposal. Greater detail on the design of the LTST facility can be found in the *100% Design Report, Long-Term Stormwater Treatment* (Landau Associates 2011c).

Stormwater is preferentially pumped from MH130A (which drains a portion of the onsite North Lateral) directly into the inlet weir tank of the LTST system for treatment at a design capacity of 500 gpm. The remaining LTST capacity (after treating the flows from MH130A) is utilized by pumping available stormwater flow from the lift station inlet vault (LSIV). The location of the LSIV pump in relation to the four King County lift station pumps is provided on Figure 3 and in Appendix B of the *Removal Action/Stormwater Treatment Completion Report* (Landau Associates 2012b). All stormwater from the four main NBF storm drain laterals and King County re-route storm line (with the exception of water pumped from MH130A) mixes together in the LSIV and is pumped to the LTST system (at a flow rate up to the 1,500 gpm treatment capacity of the LTST system). The LTST system operates at full capacity whenever sufficient stormwater is present. The LSIV submersible pump is set to produce the full design flow rate of 1,500 gpm at a level below which any of the four 50-horsepower (hp) King County pumps activate. Figure 3 shows the current on/off settings for both the LTST LSIV pump and the four King County lift station pumps. A schematic diagram of LTST system components is provided as Figure 4.

The CESF system was anticipated to achieve a long-term average volume capture at the lift station of 81 percent of runoff from only onsite drainage, and 59 percent of runoff from combined onsite and offsite drainage basins. As described in the LTST *Removal Action Work Plan* (RAWP) and RAWP Addendum (Geosyntec Consultants 2011a,b), the LTST system was predicted to achieve a total PCB load reduction of approximately 73 percent annually [or approximately 96 percent in dry weather, reduced from 6.7 to 0.24 grams per year (g/yr), and approximately 68 percent in wet weather, reduced from 32 to 10.4 g/yr]. See Section 4.1 for an analysis of PCB load reduction by the LTST system. It was also

estimated that the LTST system would comply with the interim goal for PCBs for water [0.030 micrograms per liter (µg/L)] approximately 96 percent of the time during a "typical" year (or 100 percent of dry days and 90 percent of wet days per year) based on rough estimates using limited available water and filtered solids dry and wet weather monitoring data. A more detailed description of the interim goals for the LTST system is presented in Section 1.4.

Operation of the LTST system is automated, with the exception of weekly calibration, routine inspections, and troubleshooting. The CESF system is in continuous operation; maintenance and other site activities sometimes require the CESF system to be shut down from time to time. The goal for operation of the LTST system is to achieve no more than 3 percent downtime on an annual basis. During the third year of operation, the percent downtime was less than 1 percent.

1.4 PERFORMANCE STANDARDS AND CLEANUP GOALS

LTST system performance standards were developed during the design process (including the 60% and 90% design report submittals); final performance standards are summarized in the 100% Design Report (Landau Associates 2011c). Treatment goals for LTST were listed in the ASAOC for PCB concentrations in both whole water and in solids discharged in stormwater. The treatment goal for PCBs in solids was actively reviewed and redeveloped with the EPA. LTST system performance standards and cleanup goals are described in more detail in the following sections.

1.4.1 LTST SYSTEM PERFORMANCE STANDARDS

As described in the *100% Design Report* (Landau Associates 2011c), the design basis and performance standards for the LTST system include:

- The system treats all dry weather base flows from the LSIV and from MH130A (which collects a portion of onsite North Lateral drainage) and preferentially treats wet weather storm flows from MH130A and, as capacity allows, additional flows from the LSIV (sometimes referred to in prior LTST documents as OWS421, based on Boeing's identification number). The LTST system was designed to capture and treat approximately 91 percent of onsite storm flows to MH130A (12.8 acres) and 100 percent of onsite and offsite dry weather base flows to the LSIV (approximately 106 acres onsite plus approximately 191 acres offsite). Additional treatment of low storm flows at the LSIV is provided as capacity is available. The system is set to operate at full capacity (approximately 1,500 gpm) whenever sufficient stormwater is present.
- The submersible pump at MH130A is connected to a force main and routes base and wet weather storm flows from MH130A directly to the LTST system. When the LTST system has capacity beyond that which is required to treat the flows from MH130A, additional storm flows from the LSIV are pumped to the system.

- Offsite stormwater that formerly drained to the North Lateral (41.1 acres of King County drainage) was re-routed at a storm drain manhole that is located 16 ft upstream of MH178. The re-routed line is routed directly to the LSIV. The re-route minimizes overflow bypass at MH130A and allows preferential capture and treatment of onsite North Lateral storm flows. The re-route also allows some treatment of offsite North Lateral flows (as well as other laterals) at the LSIV when capacity allows.
- One hundred (100) percent of dry weather base flows from onsite and offsite laterals discharging to the LSIV are pumped to the LTST system.
- All treated flows from the LTST system are discharged to the Lift Station outlet structure, located downstream of the LSIV and the King County Lift Station pumps. The sampling location at the outlet structure is referred to as LS431.

NBF onsite and offsite drainage basins that drain to the LSIV (the inlet structure for both the King County Lift Station and for the LTST system) and are treated by the LTST system, up to its maximum 1,500 gpm, are shown on Figure 2. The boundary of the specific drainage basin that drains to MH130A and is preferentially treated at the LTST system is also shown on Figure 2.

1.4.2 LTST TREATMENT GOALS

Interim goals for the LTST facility were set by the EPA in the ASAOC as follows:

- Water discharged to Slip 4 must be below the Aquatic Life – Marine/Chronic water quality standard of 0.030 µg/L total PCBs. Boeing conducted (AMEC Geomatrix 2011) and EPA approved (EPA 2011) a salinity study in Slip 4 that demonstrates that the use of the Marine/Chronic water quality standard for total PCBs is appropriate.
- In-line storm drain solids discharged to Slip 4 must be below 100 parts per billion (ppb) dry weight total PCBs. This interim goal shall be used as a point of departure in considering whether the long-term interim goal for in-line storm drain solids discharged to Slip 4 should be modified in accordance with the all known, available, and reasonable methods of prevention, control, and treatment (AKART; Geosyntec Consultants 2011c).

However, a recommended alternative interim goal (replacing the storm drain solids interim goal above) was approved by the EPA in a letter dated January 19, 2012 (EPA 2012). Development of the alternative interim goal is described in a memorandum, *Amended Monitoring Approach Recommendations for North Boeing Field Long-Term Stormwater Treatment System* (Jones et al. 2012). The alternative interim goal for the LTST facility is as follows:

- A flow-weighted annual average concentration (FWAAC) for total PCBs in water of 0.018 µg/L.

Both the water quality and FWAAC goals are to be met at the Point of Compliance (POC), also referred to as LS431, which is shown on Figures 4, 5, and 6. Ecology has not approved the alternative interim goal identified in this report, and has not identified the POC for the NBF-GTSP Remedial Investigation (RI).

2.0 SAMPLE AND DATA COLLECTION METHODOLOGY

This section presents the sampling objectives, sample locations, and the sample collection methodologies, frequency, and laboratory analyses. Stormwater monitoring and sampling at NBF was conducted in general accordance with the SAP Addendum (Landau Associates 2014a), which includes a Field Sampling Plan (FSP) and Quality Assurance Project Plan (QAPP).

2.1 SAMPLING OBJECTIVES

The objectives of LTST field sampling in 2013-2014 were to gather data to:

- Monitor stormwater discharges for comparison with the LTST interim goals.
- Evaluate the design assumptions for and performance of the LTST facility.
- Confirm that the interim goals are reasonably conservative and descriptive of site conditions, including the appropriateness of treating non-detect PCBs concentrations in water as zero when calculating the annual average PCB concentration.
- Evaluate individual lateral storm drain inputs, and monitor the effects of future source control actions.
- Characterize solids for disposal.

2.2 SAMPLING LOCATIONS

Stormwater and solids samples were collected at NBF at the following locations shown on Figures 4, 5, and 6:

- **Lift Station (LS431) – Compliance Monitoring Point**. The POC for the LTST interim goals is identified in the SAP as just downstream of the King County lift station pumps. This point is also downstream of the LTST system effluent discharge. Sampling at this location consisted of collecting flow-weighted whole water samples for laboratory analysis. In addition, continuous flow monitoring was conducted at LS431 to quantify the amount of stormwater discharged.
- **LTST System Influent and Effluent**. To monitor the performance of the LTST facility, whole water samples of the treatment facility influent and effluent, and filtered solids samples from the treatment facility influent and effluent, were collected for laboratory analysis. The influent to the LTST facility from MH130A (the North Lateral) was sampled independently from the influent to the LTST facility from the LSIV (all other laterals). When the King County pumps operate and bypass of the LTST CESF system occurs, untreated stormwater from LSIV is what is discharged to Slip 4. LSIV samples provide characterization of bypass stormwater[1] as well as data on the influent to the CESF system.
- **LTST Weir Tanks, Storage Tanks, and Sand Filters**. During the third year of operation, solids were removed from the storage tanks and backflush settling tank, and sand filter media

[1] Collecting samples of LSIV water that is conveyed to the treatment system is an indirect method of sampling water that bypasses the treatment system. However, during precipitation events where bypass of the treatment system occurs, stormwater enters the LSIV at high, turbulent flow rates from three very large pipes. Both the King County pumps and the LTST LSIV pump have intake structures located near the bottom of the vault. Water within the LSIV is well-mixed during these events, which is supported by visual observation through the grate at ground level. Therefore, LSIV samples are reasonably representative of bypass stormwater.

was removed and replaced. Samples of solids retained in the backflush settling tank were collected to determine appropriate disposal options for the solids. Sampling of sand filter media was not necessary as analytical data from prior waste sampling were sufficient to determine appropriate disposal options. No solids were removed and no samples were collected from the inlet weir tank during the third year of operation.

- **Sediment Traps**. To continue to evaluate individual lateral storm drain inputs, Boeing continued the sediment trap monitoring program that began in 2005, with the modifications described in the SAP to account for changes in flow due to the stormwater re-route. This consisted of collecting solids from sediment traps at locations SL4-T1, SL4-T2, SL4-T3, SL4-T4, SL4-T5, SL4-T4A, and SL4-T5A(2). This monitoring program is overseen by Ecology.
- **Re-routed North Lateral Storm Drain Bypass Pipe from King County**. Flow monitoring of re-routed stormwater from King County was conducted at SL4-T5A(2) through June 2014. On September 8, 2014, EPA approved discontinuation of re-routed King County stormwater flow monitoring.

The storm drain system, sampling location LS431, and sediment trap locations are shown on Figure 5. Figure 6 shows a more close-up plan view of the LTST system and the locations of the water sample ports and filtered solids housings for the LTST system influent (both MH130A and LSIV) and effluent.

2.3 LIFT STATION (LS431)

Sampling at LS431 consisted of collecting flow-weighted composite whole water samples from stormwater at the monitoring POC. The POC is in the King County lift station effluent vault (LS431 discharge outlet structure), at a point just downstream of the location at which the CESF effluent is discharged into that structure. Storm drain discharges here represent 94 percent of the NBF onsite drainage area. The remaining 6 percent of the area is primarily used for employee parking and is known to have relatively lower PCB solids concentrations (Landau Associates 2011c). LS431 is also the farthest downstream location in the storm drain system not impacted by tidal flushing. Figures 5 and 6 show the location of LS431.

2.3.1 SAMPLING FREQUENCY

Routine stormwater sampling at LS431 transitioned from monthly to quarterly between 2013 and 2014, in accordance with the SAP Addendum (Landau Associates 2014a). These six sampling events took place over multiple days in order to obtain representative samples of water discharged to Slip 4 during a wide variety of precipitation conditions. Setup took place and sampling commenced on the first Monday of the month. If the week of the month that included the first Monday also included a holiday, sampling instead took place the following week. Volume intervals for flow-weighted composite whole water sampling were calculated based on weather forecasts for the period starting Monday and continuing through the following Thursday, a 3-day period.

In addition, to ensure that at least some monitoring of LS431 discharge took place during LTST system bypass conditions, five storm events were sampled. Requirements for these five events were precipitation of 0.5 inches or greater in the sampling event (24 hours or less), and indication that bypass of the LTST system occurred during the sampling event.

A matrix of sampling events, including the type of event, sample dates, precipitation data, and sampling location is provided in Table 1.

2.3.2 SAMPLING AND DATA COLLECTION METHODS

Flow-weighted composite samples of the stormwater at LS431 were collected using an ISCO 6712 automated sampler with a jumbo base holding a 5-gallon laboratory-cleaned glass carboy. Equal volume aliquots [500 milliliters (mL)] were collected more frequently at high flow rates and less frequently at low flow rates. The volume interval between aliquots for each sampling event was calculated using the anticipated volume of stormwater runoff and base flow[2] for the period to be sampled. A regression line using flow data at LS431 from past storm events was used to estimate runoff for an upcoming sampling event based on the inches of predicted rainfall. During periods of dry weather, flow data collected at LS431 provided an estimation of base flow rates, which change seasonally.

Flow measurements were taken with a Marsh-McBirney FLO-DAR® Radar Area/Velocity Sensor mounted above the flow at the entrance to the 48-inch LS431 outlet pipe, downstream of the CESF effluent discharge. The sensor was installed so that it is oriented in the center of the flow in the pipe. Flow was measured continuously at 1-minute intervals. Data from the sensor were collected and logged by a Hach FL900 Series Flow Logger, and the ISCO autosampler was programmed to collect aliquots of stormwater based on the predetermined volume interval programmed into the flow logger.

The stormwater collected for laboratory analysis is drawn from a point at the entrance to the 48-inch LS431 outlet pipe, downstream of the King County lift station pumps and the LTST system discharge. A peristaltic pump (attached to the autosampler) and a Teflon®-lined suction line are used to collect water from this location. The intake of the suction line is connected to a stainless-steel strainer to remove any large debris. The strainer is attached to an aluminum plate bolted to the floor of the outlet pipe entrance.

The sampling carboy was kept on ice for the entire sampling event. Within 24 hours after the sampling event concluded (i.e., the time the last aliquot was collected), the carboy was retrieved, capped with a Teflon®-lined cap, and submitted to the laboratory for the analyses required. Using a churn splitter

---

[2] For this project, base flow is defined as water that enters the NBF storm drain system, but is not a direct result of precipitation. Base flow primarily includes infiltrating groundwater, but may also contain small contributions from other sources (e.g., fire fighting-related water, offsite sources of landscape irrigation water, stormwater discharges allowed under the Industrial Stormwater General Permit, or other offsite stormwater discharges authorized by King County). Base flow rates are measured at LS431 during periods of zero precipitation. The rate fluctuates seasonally due to changes in groundwater elevation.

or similar device, laboratory staff distributed proper volumes of homogenized stormwater to bottles for preservation or immediate analysis.

Precipitation was tracked through the Seattle Boeing Field-KCIA rain gauge (identified as "KBFI") at http://www.wrh.noaa.gov/mesowest/getobext.php?wfo=sew&sid=KBFI &num=48&raw=0&dbn=m. The KBFI rain gauge data were recorded to determine how much precipitation fell during sampling periods, as well as how much precipitation fell during the 2013-2014 season. However, from July 2014 through mid-October 2014, the KBFI rain gauge appears to have malfunctioned, as indicated by an evaluation of KBFI data, other nearby rain gauge data, and LS431 flow data. In this period, precipitation was mostly tracked through the Seattle-Tacoma International Airport rain gauge (identified as "KSEA") at http://www.wrh.noaa.gov/mesowest/getobext.php?wfo=sew&sid=KSEA%20&num=48&raw=0&dbn=m. For the October 13-14, 2014 storm sampling event, it was confirmed that greater than 0.5 inches of precipitation occurred during the sampling period using data from the RG16 rain gauge, which is owned by Seattle Public Utilities and located just west of East Marginal Way South and next to Slip 4.

2.3.3 LABORATORY ANALYSES

Whole water samples were analyzed for PCBs using EPA Method 8082, for TSS using Standard Method (SM) 2540D, and for particle size distribution (PSD) using the Ecology Technology Assessment Protocol (TAPE) 2008 Appendix F / ASTM D3977, Method C, though PSD analysis was discontinued in early 2014 in accordance with the SAP Addendum (Landau Associates 2014a). To provide information for the RI being conducted by Ecology at NBF and the GTSP, samples were analyzed for total and dissolved metals (arsenic, cadmium, chromium, copper, lead, mercury, nickel, and zinc) using EPA Methods 200.8 and 7470; semivolatile organic compounds (SVOCs) using EPA Method 8270D; and polycyclic aromatic hydrocarbons (PAHs) using EPA Selected Ion Monitoring (SIM) Method 8270D. To provide data for compliance monitoring for the National Pollutant Discharge Elimination System (NPDES) stormwater permit at NBF, samples were analyzed for turbidity using EPA Method 180.1, for pH using a field meter, and visual observations were made for oil sheen, in accordance with permit conditions. Samples were also analyzed for pH in the laboratory using EPA Method 150.1, though pH analysis in the laboratory was discontinued in early 2014 in accordance with the SAP Addendum (Landau Associates 2014a). Because of LTST operational challenges from dissolved iron and iron-related bacterial growth (e.g., precipitation in monitoring instrumentation and additional sludge volume accumulation in the backflush tank) that are associated with groundwater infiltration into the storm drain lines, samples were analyzed for total and dissolved iron and manganese using EPA Method 6010.

2.4 LONG-TERM STORMWATER TREATMENT SYSTEM SAMPLING

Sampling at the LTST facility consisted of collecting whole water grab samples of the treatment facility effluent, whole water grab samples of the treatment facility influent from the MH130A line, whole water composite or grab samples of the stormwater from the LSIV influent line, and samples of the solids entrained in the influent (both MH130A and LSIV) and effluent.

2.4.1 SAMPLING FREQUENCY

Routine stormwater sampling of the treatment facility influent and effluent transitioned from monthly to quarterly between 2013 and 2014, in accordance with the SAP Addendum (Landau Associates 2014a), with the exception of effluent water sampling, which continued on a monthly basis. In addition, five storm event samples were collected for LTST performance monitoring concurrent with LS431 storm event discharge compliance sampling. A matrix of sampling events, including the type of event, sample dates, precipitation data, and sampling location is provided in Table 1.

2.4.2 SAMPLING AND DATA COLLECTION METHODS – WHOLE WATER

Whole water grab samples were collected directly into laboratory bottles from sample ports on the MH130A influent line and the effluent line of the treatment system. To monitor the LTST system performance under a variety of conditions, efforts were taken to collect whole water grab samples from MH130A influent and effluent during both precipitation conditions and during base flow conditions. Reasonable efforts were made to sample at various times during a precipitation event (i.e., at the beginning of a storm and toward the end of a storm) and during various intensities of storms. Samples were collected in laboratory-supplied sample bottles after allowing water to purge from the sampling ports for a minimum of 20 seconds prior to collection of a sample.

Whole water grab samples from the LSIV influent line were collected either by autosampler or directly into laboratory bottles from a sample port. In March 2012, in order to better meet the goal of collecting samples representative of LSIV stormwater during periods of bypass of the CESF system, an ISCO model 1640 Liquid Level Actuator was installed in the Lift Station outlet structure that could enable the LSIV autosampler whenever bypass took place. During sampling events when LTST bypass occurred, a flow-weighted composite whole water sample was collected from the LSIV influent line. Sampling period duration generally matched that of LS431. The LSIV ISCO sampler was triggered from the flow logger used at LS431, as no reasonably feasible method of triggering sample collection based on flow rates into or out of the LSIV was identified. Although LS431 flow includes treated water and bypass water, triggering LSIV samples based on the LS431 flow logger still results in more aliquots being taken during higher flow rates (e.g., during bypass conditions) and less aliquots being taken during lower flow rates (e.g., discharge of treated stormwater only). Whenever there was no bypass during a sampling

event, a grab sample of LSIV whole water during non-bypass conditions was collected directly into laboratory bottles from a sample port on the LSIV influent line at the end of the event, in order to provide water quality data on LTST system influent from the LSIV.

2.4.3 SAMPLING AND DATA COLLECTION METHODS – FILTERED SOLIDS

To collect solids samples from the treatment facility influent and effluent, stormwater solids were collected in filter bags using FSI model CBFP-11 carbon steel filter housings installed on the influent pipelines (MH130A and LSIV) and on the effluent pipeline. These locations are shown on Figure 6. A portion of each of the three streams passes through a filter bag where solids are captured. A flow totalizer downstream of each filter housing measures the total volume of stormwater flowing through the filter bag. Filter bags used were 16-inch-long, 7-inch-diameter, 1 micron (µm) nominal particle size rated polypropylene felt filter bags with a Polyloc® seal (to prevent bypass).

In early 2013, two filtered solids systems were installed in parallel on each of the three stormwater sampling locations, so that two bags for each location could be collected simultaneously during a sampling event. These upgrades were primarily to provide PAH and metals analyses for the RI being conducted by Ecology at NBF and the GTSP.

The amount of filtration time for each filter bag generally matched the duration of the LS431 water sampling (up to 24 hours for storm events, approximately 3 days for routine monthly events). Only clean, new filters were used. For bags being submitted for PCB and PAH analysis, filter bags were pre-weighed and numbered at the laboratory. After successful completion of filtration, the filter bags were removed, placed in a clean Ziploc® bag, sealed, labeled, and transported to the laboratory. Readings from the flow totalizers were collected at the start and end of filtration for each sampling event.

2.4.4 LABORATORY ANALYSES

All whole water samples were analyzed for PCBs using EPA Method 8082. Whole water samples were also analyzed for TSS using Standard Method (SM) 2540D, and for PSD using the Ecology TAPE 2008 Appendix F/ASTM D3977, Method C, though TSS analysis at the treatment system effluent location and PSD analysis for all three locations was discontinued in early 2014 in accordance with the SAP Addendum (Landau Associates 2014a). To provide information on the effectiveness of the LTST system at removing metals, samples were analyzed for total and dissolved metals (arsenic, cadmium, chromium, copper, lead, mercury, nickel, and zinc) using EPA Methods 200.8 and 7470, though metals analysis at the treatment system effluent location was discontinued in early 2014 in accordance with the SAP Addendum (Landau Associates 2014a). To provide information for the RI being conducted by Ecology at NBF and the GTSP, samples were analyzed for SVOCs using EPA Method 8270D and PAHs using EPA SIM Method 8270D at LSIV during every event and at MH130A during alternating events.

All LTST samples were also analyzed for turbidity (except the effluent, which is continuously analyzed with a CESF system turbidity meter) using EPA Method 180.1, for pH using EPA Method 150.1, and for total and dissolved iron and manganese, using EPA Method 6010, though pH analysis at all three locations and iron and manganese analysis at the treatment system effluent location were discontinued in early 2014 in accordance with the SAP Addendum (Landau Associates 2014a).

Filtered solids samples collected from the LTST facility influent and effluent were analyzed for PCBs by EPA Method 8082. Filtered solids samples from MH130A and LSIV were also analyzed on an alternating basis for metals by EPA Methods 6010/6020 and 7471 and for PAHs by EPA Method 8270D, though metals and PAH analysis were discontinued in early 2014 in accordance with the SAP Addendum (Landau Associates 2014a). For PCB and PAH analyses, new filters were weighed and numbered prior to sample collection so that each sample was matched to a unique, clean-filter weight. The used filter was dried, weighed, and processed by the laboratory. For each filter, the entire filter (not including the hard plastic ring, but including whatever material was collected) was extracted and the analytical results presented in units of total µg of PCBs or PAHs. Knowing the full weight of the used dried filter (including collected material) and the pre-filtration weight, the estimated mass of PCBs or PAHs per mass of total solids was calculated. For metals analysis, solids were scraped from the used filter bags for analysis.

2.5 WEIR TANK, STORAGE TANK, AND SAND FILTER MEDIA MONITORING AND SAMPLING

The solids levels in the inlet weir tank, each storage tank, and the backflush settling tank were inspected at least once per month. Monitoring of the thickness of accumulated solids was performed with a Sludge Judge® inserted from the top of the tank to the tank floor. The device collects a solids sample that can be retrieved and visually inspected. The thickness of accumulated solids in the sampler was observed and recorded. Three or more readings, spread approximately equally along the length of the tank, were averaged and used to determine if the solids level was deep enough to require tank cleanout. Prior to 2014, solids in the three storage tanks were never deep enough to warrant sampling, cleaning, and disposal. In August of 2014, the three storage tanks were cleaned after approximately 2 ft of solids were observed to have accumulated in the bottom of the tanks. Solids from the backflush settling tank were sampled on March 4, 2014, and were analyzed for PCBs using EPA Method 8082, SVOCs using EPA Method 8270D, diesel-range and motor oil-range petroleum hydrocarbons using Ecology Method NWTPH-Dx, gasoline-range petroleum hydrocarbons using Ecology Method NWTPH-Gx, and metals using EPA Methods 6010, 7471, and 1311 [the toxicity characteristic leaching procedure (TCLP)].

The sand filter media was removed and replaced over the course of 2 days, on June 30 and July 8, 2014, approximately 1.5 years since the prior replacement. Sampling of sand filter media was not

necessary as analytical data from prior waste sampling were sufficient to determine appropriate disposal options. Observation of sand filter operation by Clear Water Services, LLC (Clear Water) since the media was replaced has indicated that the sand filters are still filtering and backflushing effectively, and Clear Water expects that the filter media will not need to be replaced prior to summer of 2015.

2.6 SEDIMENT TRAPS

The sediment trap monitoring program that began in 2005 at the NBF site, and is overseen by Ecology, was continued during operation of the LTST facility to evaluate stormwater quality from the individual NBF lateral storm drains prior to combining at the LSIV and treatment at the LTST facility. Sediment trap sampling locations are shown on Figure 5. Solids were collected by sediment traps at locations SL4-T1, SL4-T2, SL4-T3, SL4-T4, SL4-T5, and SL4-T4A. Locations SL4-T2A, SL4-T3A, and SL4-T6 are monitored separately by the City or King County, and analytical data for these locations are not presented in this report. At location SL4-T5A(2), a sediment trap is not used; instead, solids are collected from the bottom of the wet well, which collects solids behind a permanent weir.

2.6.1 SAMPLING FREQUENCY

The established frequency for sediment trap sampling is annually, currently once per year in the spring. Sediment trap samples were most recently collected on April 25, 2014, and sediment trap bottles were redeployed the same day for collection in spring 2015.

2.6.2 SAMPLING METHODS

Each sediment trap [with the exception of SL4-T5A(2)] consists of two stainless-steel brackets and housings that each holds a Teflon® sample container. Once the containers are securely placed on the bracket, the container lids are removed and placed in a plastic sealable bag and labeled with the sample location. After the desired sample duration has elapsed, the lids are placed back on the containers and the containers removed. The solids in SL4-T5A(2) were collected from the bottom of the compartment of the wet well behind the weir using a new, clean, laboratory-supplied glass soil sampling jar affixed to the end of a decontaminated telescoping sampling pole. Water was decanted from the jar, to the extent possible, and the solids from each "pass" were combined and homogenized in a clean stainless-steel bowl using a clean stainless-steel spoon, and placed into a separate sample jar.

2.6.3 LABORATORY ANALYSES

Sediment trap solids samples were analyzed for PCBs using EPA Method 8082; SVOCs using Puget Sound Dredged Disposal Analysis (PSDDA) Method SW8270D; total metals (arsenic, copper, lead, mercury, and zinc) using EPA Methods 6010 and 7471; diesel-range and motor oil-range petroleum

hydrocarbons using Ecology Method NWTPH-Dx; total organic carbon (TOC) using Puget Sound Estuary Protocols (PSEP) 1986, and PSD using PSEP Method PS. Depending on the quantity of solids collected, the laboratory might not have been able to analyze all parameters, in which case, the analysis of parameters was prioritized in the order listed above.

2.7 RE-ROUTED KING COUNTY STORMWATER

Continuous flow rate monitoring of re-routed stormwater from King County took place through June 2014 at the wet well near the LTST, as discussed in the Completion Report (Landau Associates 2012b), using a weir and pressure transducer. In July 2014, inaccurate (falsely high) water level and flow rate readings were recorded due to accumulation of biological growth in the wet well. Since almost 3 years of re-routed King County stormwater flow monitoring data have been collected (which could be used to establish general annual stormwater flow patterns and volumes, if necessary), EPA approved discontinuation of this flow monitoring in September 2014. Sediment trap sampling will continue to include analysis of solids from the King County wet well on the re-route line annually.

2.8 CATCH BASIN INSERT FILTER REPLACEMENT

Although not directly related to CESF system treatment and LTST system monitoring, this source control action directly reduces the amount of solids and associated contaminants that enter the storm drain system and that the LTST system would need to filter out. Catch basin insert filters were initially installed and tested at three locations in March 2011. Catch basin insert filters were installed at 25 more catch basins in April 2012, with 14 of those locations being large catch basins that required two separate insert filter bag structures. Therefore, there are a total of 28 catch basin locations that have insert filter structures and a total of 42 individual insert filter bags used.

In February 2014, captured solids were collected from all 28 catch basin insert filters and submitted to the laboratory for PCB analysis by EPA Method 8082. All 28 insert filters were clogged with solids and 39 of 42 filter bags were concurrently replaced. In November 2014, all catch basin insert filters were again replaced, but catch basin filtered solids were not sampled. It is planned that filter inspection will continue to occur twice per year, and filters will be replaced whenever they are observed to be clogged with solids. It is also planned that catch basin filtered solids will continue to be sampled for PCBs once per year.

3.0 MONITORING RESULTS

The results from monitoring of the NBF storm drain system and LTST performance evaluation have been provided to the EPA on a regular basis as part of the detailed quarterly and brief monthly progress reports. These monitoring results are provided in this section. The results from sampling solids collected from the sediment traps and from the catch basin insert filters are also discussed.

3.1 LS431 AND LTST PERFORMANCE ANALYTICAL RESULTS

Cumulative laboratory analytical results are provided in Tables 2 through 8. Whole water results are provided in Table 2 for the LS431 point of compliance, Table 3 for MH130A, Table 4 for LSIV, and Table 5 for CESF system treated effluent. Filtered solids results are provided in Table 6 for MH130A, Table 7 for LSIV, and Table 8 for treated effluent.

3.1.1 PCBs IN WHOLE WATER

Analytical Resources Inc. evaluates PCBs in whole water between the Limit of Detection (LOD) and the Limit of Quantitation (LOQ) for each Aroclor. Since the target LOQ for PCBs in whole water is 0.010 µg/L, the LOD for PCBs in whole water is 0.005 µg/L unless the LOQ is elevated. PCB concentrations below the LOD are specified as non-detect in this report.

In the 2013-2014 reporting period, all water samples of the LTST CESF system effluent have been non-detect for PCBs. Concentrations of total PCBs at the influent to the CESF system have ranged from 0.043 µg/L to 0.37 µg/L at MH130A, and from non-detect to 0.036 µg/L at LSIV. At LSIV, PCBs were detected in seven of eight flow-weighted composite LSIV samples of bypass, ranging from 0.015 µg/L to 0.036 µg/L, but were not detected in any of the three grab samples of LSIV water during non-bypass conditions. At the POC, LS431, PCBs were not detected in five of six routine (monthly or quarterly) event samples and two of five storm event samples in the 2013-2014 reporting period. When detected, PCBs at LS431 ranged from 0.010 µg/L to 0.022 µg/L. The four detections in the 2013-2014 reporting period coincided with either large amounts or a high intensity of precipitation during the sampling event, similar to what was observed in previous years (Landau Associates 2013, 2014b). All PCB detections in water samples in the 2013-2014 reporting period have been Aroclor 1254 or Aroclor 1260. Aroclor 1254 has been the most common Aroclor detected in previous years. Aroclor 1260 was detected more frequently in 2013-2014 compared to previous years.

3.1.2 TSS AND PSD IN WHOLE WATER

In the 2013-2014 reporting period, TSS in water samples ranged from non-detect [at a LOQ of 1.0 milligrams per liter (mg/L)] to 9.5 mg/L at the LTST CESF system effluent (prior to discontinuation of TSS analysis at this location), from 3.2 to 34.3 mg/L at MH130A, and from 3.2 to 145 mg/L at LSIV. In general, TSS was higher in flow-weighted composite LSIV samples of LTST bypass and lower in grab samples at LSIV during non-bypass conditions. At LS431, TSS in water samples ranged from 2.1 to 43.3 mg/L in the 2013-2014 reporting period. In general, higher TSS correlated with PCB detections at LS431.

Similar to previous years (Landau Associates 2013, 2014b), PSD data from water samples (collected prior to discontinuation of PSD analysis in early 2014) were highly variable throughout the reporting period at all sampling locations, as shown in Tables 2 through 5. In the CESF system effluent samples analyzed, the TSS concentration given by the PSD analysis (when all particle size groupings are added together) did not correlate with the direct TSS concentration measured using method SM2540D. It is believed that low TSS concentration in CESF-treated effluent may contribute to imprecise PSD analysis in these samples, which limits the ability to draw conclusions from this data set. A proposal to discontinue sampling for PSD was included in the 2014 proposed SAP Addendum (Landau Associates 2014a), and was subsequently approved by EPA (EPA 2014).

3.1.3 SVOCS IN WHOLE WATER

At LS431, SVOCs in water (other than PAHs) were non-detect during the reporting period for all constituents except for butylbenzylphthalate (one detection of 1.5 µg/L) and bis(2-ethylhexyl)phthalate (one detection of 6.1 µg/L). Butylbenzylphthalate was detected twice at LSIV (maximum concentration of 2.1 µg/L) and once at MH130A (4.5 µg/L) in the reporting period. Bis(2-ethylhexyl)phthalate was not detected at LSIV or MH130A. There were three detections of di-n-octyl phthalate at LSIV in the reporting period, with a maximum concentration of 2.2 µg/L.

Due to the lower LOQs used, PAHs continue to be more frequently detected at all sampling locations. Data indicate a strong correlation between the amount of precipitation (and corresponding percentage of treatment system bypass) during the sampling event and detections of PAHs. The routine events with little or no precipitation (and little to no CESF system bypass) had fewer detected constituents and generally lower PAH concentrations. As high molecular weight compounds with generally low solubility, similar to PCBs, PAHs in stormwater are known to be associated with the suspended solids rather than being present in a dissolved form. Therefore, it is not unexpected that the data suggest that the CESF treatment system is effective at reducing concentration of PAHs.

3.1.4 METALS IN WHOLE WATER

High concentrations of iron and manganese continue to be routinely detected in LTST CESF system influent, effluent, and LS431 water samples, consistent with the observation of base flow due to groundwater infiltration into the storm drain system and associated iron bacterial growth in many elements of the LTST system and storm drain system. Of the other metals analyzed for, arsenic, cadmium, chromium, copper, lead, nickel, and zinc were detected at various concentrations at MH130A, LSIV, LS431, and the CESF effluent in the reporting period. Mercury was not detected at any sampling location in the reporting period. Note that total and dissolved metals analysis was discontinued at the CESF system effluent location in early 2014, in accordance with the SAP Addendum (Landau Associates 2014a), because the CESF system showed consistent results regarding removal of metals.

In the 2013-2014 reporting period, for total arsenic in water samples, concentrations at the CESF system influent ranged from 0.5 to 2.3 µg/L at MH130A and from 0.6 to 2.8 µg/L at LSIV, while concentrations at the CESF system effluent ranged from non-detect (at a LOQ of 0.2 µg/L) to 0.5 µg/L; for total cadmium in water samples, concentrations at the CESF system influent ranged from 0.1 to 0.9 µg/L at MH130A and from non-detect (at a LOQ of 0.1 µg/L) to 0.8 µg/L at LSIV, while concentrations at the CESF system effluent were all non-detect except for one detection at 0.1 µg/L; for total chromium in water samples, concentrations at the CESF system influent ranged from non-detect (at a LOQ of 0.5 µg/L) to 1.7 µg/L at MH130A and from non-detect (at a LOQ of 1 µg/L) to 4.2 µg/L at LSIV, while concentrations at the CESF system effluent were all non-detect except for one detection at 0.6 µg/L; for total copper in water samples, concentrations at the CESF system influent ranged from 1.8 to 111 µg/L at MH130A and from 1.8 to 16.6 µg/L at LSIV, while concentrations at the CESF system effluent ranged from non-detect (at a LOQ of 0.5 µg/L) to 1.8 µg/L; for total lead in water samples, concentrations at the CESF system influent ranged from 0.1 to 6.4 µg/L at MH130A and from 0.1 to 8.4 µg/L at LSIV, while concentrations at the CESF system effluent ranged from non-detect (at a LOQ of 0.1 µg/L) to 0.2 µg/L; for total nickel in water samples, concentrations at the CESF system influent ranged from 1.0 to 1.9 µg/L at MH130A and from 0.9 to 9.4 µg/L at LSIV, while concentrations at the CESF system effluent ranged from non-detect (at a LOQ of 0.5 µg/L) to 1.2 µg/L; for total zinc in water samples, concentrations at the CESF system influent ranged from 16 to 146 µg/L at MH130A and from non-detect (at a LOQ of 4 µg/L) to 91 µg/L at LSIV, while concentrations at the CESF system effluent ranged from 5 to 25 µg/L.

As a point of comparison for the metals concentrations, the metals listed above (except nickel and chromium) have a benchmark value established in the Industrial Stormwater General Permit applicable to various industry categories. All of the CESF effluent samples and LS431 POC samples at NBF were well below the listed benchmark values for those metals.

3.1.5 PCBs IN FILTERED SOLIDS

In the 2013-2014 reporting period, calculated concentrations of PCBs in filtered solids (using filter bag weights and mass of solids collected) ranged from 1.58 to 7.32 milligrams per kilogram (mg/kg) at MH130A, from 0.07 to 0.78 mg/kg at LSIV, and from 0.27 to 1.21 mg/kg at the CESF effluent. Calculated concentrations of PCBs in whole water (using PCBs in filtered solids data and filtered solids flow totalizer data) in the reporting period ranged from 0.035 to 0.277 µg/L at MH130A, from 0.0002 to 0.134 µg/L at LSIV, and from 0.0001 to 0.0004 µg/L at the CESF effluent.

3.2 SUMMARY OF FLOW MEASUREMENTS AND PRECIPITATION DATA

During the period from November 1, 2013 through October 31, 2014, approximately 191 million gallons of water were treated and discharged by the CESF system. Flow rate measurements collected by the Flo-Dar sensor and Hach flow logger at the lift station discharge (LS431) indicated that 294 million gallons of stormwater were discharged from the lift station to Slip 4 in the same period. This volume includes both treated water and any water discharged by King County pumps that bypassed treatment. Therefore, an estimated 65 percent of stormwater flowing to the lift station was treated by the LTST system.

Accordingly, 103 million gallons of stormwater bypassed treatment at the LTST system and was directly discharged to Slip 4. Periods of bypass of the treatment system can be determined from the flow data collected at LS431, as evidenced by a sharp increase in flow rate of discharge when a King County pump turns on and a sharp decrease in flow rate of discharge when a King County pump turns off. A summary of the 2013-2014 LTST sampling events and information on the times and durations of bypass during each event is included in Table 9.

As described in the 2011-2012 Annual Performance Evaluation Report (Landau Associates 2013), the vast majority of LTST system bypass occurs with just one of the four King County pumps on. The Flo-Dar meter was not calibrated for more than one King County pump on, so the accuracy of the data when more than one pump is on has not been confirmed. However, due to the low frequency and short duration of these occurrences, any error in flow data is deemed to be negligible when considering volumes for the entire year.

During the 1-year period from November 2013 through October 2014, approximately 39 inches of precipitation fell in the drainage area, as measured at the Boeing Field weather station (identified as KBFI) and at the Seattle-Tacoma International Airport weather station (identified as KSEA) during periods when KBFI was malfunctioning; 11.4 million gallons were pumped directly from MH130A to the LTST system; and 0.37 million gallons bypassed the MH130A pump (by overtopping the adjacent

MH130B weir) and flowed to the LSIV. Therefore, approximately 97 percent of stormwater at MH130A was captured and pumped directly to the treatment system (with an additional portion of the volume bypassed picked up for treatment at the LSIV). Since the start of LTST operation on November 1, 2011, the cumulative percent capture at MH130A is 93.7 percent, above the design average long-term capture of 91 percent.

Raw flow data collected at 1-minute intervals of discharge at LS431, at 15-minute intervals for CESF discharge, and at 30-second intervals at the King County re-route wet well weir and MH130B weir, are not presented in this report due to the large number of readings collected, but are available in electronic form upon EPA or Ecology's request. Precipitation totals and stormwater flow volumes by month are listed in Table 10.

3.3 SEDIMENT TRAP SAMPLING RESULTS

Sediment trap samples were most recently collected on April 25, 2014. Sediment trap sample analytical results for total PCBs for this most recent sampling event and for previous sediment trap sampling events are provided in Table 11.

The results of evaluating historical trends in PCB concentrations at each of the sampling locations are somewhat inconclusive because of the periodic instances when not enough solids had accumulated in the traps to allow the laboratory to present the PCB result on a dry weight basis; instead, the concentrations were presented "as received." It is also not possible to draw firm conclusions about reductions in PCB mass loading following source control activities using only sediment trap solids PCBs concentration data, because of the potential reduction in total solids mass loading (e.g., from catch basin insert filters, surface sweeping, catch basin cleanout, and/or storm drain pipe repair). Therefore, for the past few sediment trap sampling events, we have requested the laboratory record the total mass of solids collected in the traps.

Evaluation of both sets of data together reveals that PCBs mass deposition rates at sediment trap locations SL4-T5 and SL4-T1 over the past 3 monitoring years remain lower than the period prior to STST and LTST system installation, as shown in Table 12. The reduction in PCBs mass loading rates at T5 and T1 are likely primarily attributable to the capture and treatment of stormwater in the North Lateral storm drain line at MH130A during both STST and LTST system operations.

At sediment trap locations SL4-T2, SL4-T3, and SL4-T4, PCB mass loading rates appear to have increased somewhat compared to the previous few years. If this trend were to continue, and if the PCBs discharge loading at the LS431 POC were to approach the 0.018 µg/L FWAAC alternative interim goal for PCBs in the future, then additional source control actions in the south, south-central, and north-central laterals might need to be considered.

3.4 CATCH BASIN INSERT FILTER SOLIDS SAMPLING RESULTS

As part of continued PCBs source evaluation, samples of filtered solids from the 28 catch basins with insert filters were analyzed for PCBs. Laboratory data from the February 2014 catch basin insert filter solids sampling are provided in Table 13. PCB concentrations in solids ranged from 0.44 to 22.6 mg/kg. In November 2014, all catch basin insert filters were again replaced, but catch basin filtered solids were not sampled. It is planned that filter inspection will continue to occur twice per year, and filters will be replaced whenever they are observed to be clogged with solids. It is also planned that catch basin filtered solids will continue to be sampled for PCBs once per year.

4.0 EVALUATION OF LTST PERFORMANCE

This section provides an evaluation of the NBF LTST monitoring results for the period of November 2013 through October 2014. The first 3 years of LTST monitoring and subsequent evaluation of the collected data have prompted recommendations for minor modifications to the existing SAP for the stormwater monitoring program in 2015. The modifications are presented in an addendum to the existing SAP, provided in Appendix B.

4.1 LTST SYSTEM AND POINT OF COMPLIANCE

Results from the third year of LTST system operation confirm the continued ability of the LTST system to meet the interim goals as described in Section 1.4.2. At the POC (LS431), all flow-weighted composite whole water samples had PCBs concentrations that were below the marine chronic water quality criterion interim goal of 0.030 µg/L. Five out of six routine 3-day (monthly or quarterly) event composite samples and two out of five composite storm event samples at LS431 were non-detect for PCBs. For the four events where PCBs were detected during the 2013-2014 reporting period, concentrations ranged from 0.010 to 0.022 µg/L. These four detections, as well as the three previous detections during the 2011-2012 and 2012-2013 reporting periods, were recorded during very large or very intense precipitation events. This is not unexpected because more untreated stormwater will bypass the treatment system and be discharged during heavy or intense storm events.

The FWAAC at the LS431 POC, representing discharge to Slip 4, has been calculated for comparison to the 0.018 µg/L alternative interim goal. A memorandum describing the FWAAC evaluation and providing the associated calculations was prepared by Geosyntec and the NBF Stormwater Expert Panel and is provided in Appendix A. For the third year of LTST system operation, the FWAAC for total PCBs was calculated to be 0.0054 µg/L, assuming that non-detect results for PCBs are taken to be zero. The calculated FWAAC, if it is conservatively assumed that non-detect values were equal to the target limit of detection (LOD), was 0.0092 µg/L. Alternatively, the FWAAC was calculated to be 0.0083 µg/L total PCBs if TSS and filtered solids PCBs measurements are used to estimate the PCBs concentrations for the whole water non-detect values. The FWAAC values using all three calculation methods are well below the alternative interim goal of 0.018 µg/L PCBs.

LTST flow monitoring indicates that the LTST system treated approximately 191 million gallons, which is 65 percent of measured stormwater volume discharged from the lift station to Slip 4 during the third year of LTST system operation. The 3-year cumulative capture and treatment of 66 percent of stormwater exceeds the original design basis of 59 percent (Geosyntec Consultants and Landau Associates 2011), indicating the capacity of the treatment system remains appropriate.

Calibration of the Flo-Dar flow meter for high-flow conditions (conducted during bypass of the treatment system during a period of intense precipitation) was conducted on October 22, 2014. This calibration requires intense precipitation (difficult to predict) to occur outside of a sampling event (intense precipitation events are often targeted for sampling), and requires the coordination of Landau Associates personnel, Clear Water personnel, and King County personnel, which is difficult to accomplish especially during nighttime and weekend hours. The high-flow calibration was previously conducted once in April 2012. The two high-flow calibrations generated very similar high-flow correction factors (which are applied to LS431 flow data whenever one or more King County pumps are operating and bypassing the treatment system). Calibration of the Flo-Dar flow meter for low-flow conditions (conducted during discharge of treated water only, up to the design treatment flow rate of 1,500 gpm) was not conducted in the 2013-2014 monitoring period. The low-flow calibration was most recently conducted in July 2013. We will continue to plan for one low-flow and one high-flow calibration every year, when possible. The next low-flow calibration is planned for December 2014.

Although not explicitly part of the LTST design or part of the SAP, it is worth noting that NBF is also covered under the Ecology Industrial Stormwater General Permit (ISGP). Since the LTST system has been in place, LS431 is also the designated sampling point for ISGP compliance. All LTST effluent and LS431 sampling results have met the numeric benchmark criteria for ISGP monitoring parameters (i.e., turbidity, pH, copper, and zinc).

4.2 VALIDITY OF ASSUMPTIONS

The alternative solids interim goal of a FWAAC for total PCBs in water of 0.018 µg/L at the LS431 POC was developed using certain estimates and assumptions (Jones et al. 2011). These assumptions were confirmed as appropriate for the first 2 years of operation, but it is worth comparing actual measured results from the third year of LTST system operation to values assumed in that evaluation.

4.2.1 NON-DETECT RESULTS

Because the laboratory analytical LOQ for PCB aroclors was 0.010 µg/L when the alternative interim goal was established, and the alternative interim goal is a FWAAC of 0.018 µg/L for PCBs, it was decided to use zero for non-detect PCBs results when calculating the FWAAC (Jones et al. 2011). The rationale is that using the LOQ, or even half the value of the LOQ, could result in a calculation that gives a false exceedance of the alternative solids interim goal. Starting in December 2012, Analytical Resources Inc. has reported whole water PCBs concentrations down to the LOD (half the LOQ, which is 0.005 µg/L unless the LOQ is elevated). To demonstrate the validity of using zero for non-detect PCBs

results, filtered solids analytical results from treatment system effluent were evaluated to calculate apparent PCB concentrations in water for each event where data were available, as follows:

$$\frac{Mass\ of\ PCBs\ in\ filtered\ solids\ (\mu g)}{Volume\ of\ stormwater\ filtered\ (L)} = Concentration\ of\ PCBs\ in\ stormwater\ \left(\frac{\mu g}{L}\right)$$

The results of this evaluation are provided in Table 8. Calculated PCBs concentrations ranged from 0.0001 µg/L to a maximum of 0.0004 µg/L for the ten monthly and storm event samples collected of treatment system effluent during the third year of operation. The mean calculated PCBs concentration of the ten samples was 0.0003 µg/L. Comparing that result to the target laboratory LOQ for PCBs in whole water of 0.010 µg/L indicates that using zero for non-detect results is more appropriate than using half the target LOQ, 0.005 µg/L, or even half the target LOD, 0.0025 µg/L.

To assess the effect of using zero for non-detect results on the FWAAC, an alternative calculation of the FWAAC was performed using both LSIV and effluent filtered solids data rather than zero for the non-detect whole water concentrations, as presented in Appendix A. As listed in Appendix A, the FWAAC for PCBs using filtered solids data was calculated to be 0.0083 µg/L, which is well below the interim goal of 0.018 µg/L.

4.2.2 Other Assumptions Used to Calculate the Alternative Interim Goal

Based on hydrologic modeling, a total volume for annual stormwater discharge from the lift station to Slip 4 of 352 million gallons was estimated (Geosyntec Consultants 2011a). The measured annual discharge of 294 million gallons of stormwater in the third year was 84 percent of the expected average volume, despite measured precipitation of 39.37 inches, which was 9 percent more than the historical annual average precipitation for the site vicinity of approximately 36 inches. This is similar to the first 2 years of LTST operation, and the measured discharge volume indicates that the original estimate of average annual runoff volume still appears to have been conservative.

During LTST system design, the annual average percentage of stormwater that was estimated to be treated was 59 percent. The measured volume of stormwater treated in the third year of operation was 191 million gallons, corresponding to 65 percent of the volume discharged to Slip 4. Therefore, the assumption of average percentage of stormwater that will be treated still appears to have been conservative and suggests that the 0.018 µg/L PCBs FWAAC would not need to be adjusted downward based on the actual measurements.

The forecast during LTST design was that the average TSS concentration at the LSIV would be 27 mg/L. The measured average LSIV TSS concentration has been variable during the 3 years of operation - 23.3 mg/L in the first year, 86.7 mg/L in the second year, and 66.1 mg/L in the third year. The

average TSS concentration at the point of discharge, LS431, was 11.6 mg/L in the first year, 9.3 mg/L in the second year, and 14.2 mg/L in the third year.

The average CESF system effluent TSS concentration was projected during LTST system design to be approximately 0.5 mg/L based on the performance of the STST system. The measured average TSS concentration in LTST system treated effluent was 3.1 mg/L during the 2013 to 2014 monitoring year. Similar to the first 2 years of operation, this higher than initially projected TSS concentration in the treated effluent is believed to be the result of the higher concentration of iron solids generated by the greater proportion of infiltrating groundwater to the LTST system compared to the STST stormwater source at MH130A. Overall, the relatively low TSS concentrations measured at LS431 and the system effluent suggest a similar solids mass loading to Slip 4 compared to what was originally estimated, again suggesting that no adjustment to the 0.018 µg/L PCBs FWAAC evaluation criterion would need to be made.

5.0 USE OF THIS REPORT

This report has been prepared for the exclusive use of The Boeing Company and applicable regulatory agencies for performance evaluation of a long-term stormwater treatment facility for removal of PCBs from stormwater in the storm drain system at NBF. No other party is entitled to rely on the information, conclusions, and recommendations included in this document without the express written consent of Landau Associates. Further, the reuse of information, conclusions, and recommendations provided herein for extensions of the project or for any other project, without review and authorization by Landau Associates, shall be at the user's sole risk. Landau Associates warrants that within the limitations of scope, schedule, and budget, our services have been provided in a manner consistent with that level of care and skill ordinarily exercised by members of the profession currently practicing in the same locality under similar conditions as this project. We make no other warranty, either express or implied.

This document has been prepared under the supervision and direction of the following key staff.

LANDAU ASSOCIATES, INC.

Martin Valeri, E.I.T.
Project Engineer

Joseph A. Kalmar, P.E.
Principal

JAK/MCV/tam

6.0 REFERENCES

AMEC Geomatrix. 2011. *Slip 4 Salinity Monitoring Data Report, North Boeing Field, Seattle/Tukwila, Washington*. Submitted to The Boeing Company. June.

EPA. 2014. Email message from Karen Keeley, U.S. Environmental Protection Agency, to Carl M. Bach, The Boeing Company. Re: NBF Annual Performance Evaluation Report, Long-Term Stormwater Treatment, 2012-2013. March 10.

EPA. 2012. Letter: *EPA Approval of Final Memorandum, Amended Monitoring Approach Recommendations for North Boeing Field Long-Term Stormwater Treatment System, North Boeing Field, Seattle, Washington, prepared for The Boeing Company by Geosyntec Consultants and NBF Stormwater Expert Panel, dated January 10, 2012, ASAOC for Removal Action, CERCLA-10-2010-0242.* From Karen Keeley, Project Manager, U.S. Environmental Protection Agency, to Carl Bach, Project Manager, The Boeing Company. January 19.

EPA. 2011. Letter: *EPA Approval of Slip 4 Salinity Monitoring Data Report, North Boeing Field, Seattle, Washington, prepared for The Boeing Company by AMEC Geomatrix, Inc., dated June 2011; ASAOC for Removal Action, CERCLA-10-2010-0242.* From Karen Keeley, Project Manager, U.S. Environmental Protection Agency, Region 10, to Brian Anderson, The Boeing Company. June 20.

EPA. 2010. Memorandum: *Action Memorandum for the Time-Critical Removal Action at North Boeing Field near the Slip 4 Early Action Area of the Lower Duwamish Waterway Superfund Site, Seattle, King County, Washington.* From Karen Keeley, Remedial Project Manager, U.S. Environmental Protection Agency, Region 10, to Daniel D. Opalski, Director, Office of Environmental Cleanup. September 23.

EPA and Boeing. 2010. *Administrative Settlement Agreement and Order on Consent for Removal Action, North Boeing Field and the Slip 4 Early Action Area of the Lower Duwamish Waterway Superfund Site, Seattle, Washington*. U.S. Environmental Protection Agency Region 10 Docket No. CERCLA-10-2010-0242. September 29.

Geosyntec Consultants. 2011a. *Final Removal Action Work Plan: Long-Term Stormwater Treatment Addendum, North Boeing Field*. March 3.

Geosyntec Consultants. 2011b. *Final Removal Action Work Plan: Long-Term Stormwater Treatment, North Boeing Field*. January 26.

Geosyntec Consultants. 2011c. *AKART Analysis Report for North Boeing Field Long-Term Stormwater Treatment*. February 9.

Geosyntec and Landau Associates. 2011. *Final Pre-Design Technical Memorandum: Long-Term Stormwater Treatment*. North Boeing Field. April 6.

Jones, J., M. Stenstrom, R. Pitt, and Geosyntec Consultants. 2012. Memorandum: *Amended Monitoring Approach Recommendations for North Boeing Field Long-Term Stormwater Treatment System.* From Jon Jones, Michael Stenstrom, and Robert Pitt, NBF Stormwater Expert Panel; jointly with Geosyntec Consultants, to Karen Keeley, U.S.EPA. January 10.

Jones, J., Stenstrom, M., Pitt, R., and Geosyntec Consultants. 2011. Memorandum: *Alternative Interim Goal Recommendations for Protection of Slip 4 Sediment Recontamination.* December 12.

Landau Associates 2014a. *Sampling and Analysis Plan Addendum, 2014 Long-Term Stormwater Treatment, North Boeing Field, Seattle, Washington*. *Appendix B of the Annual Performance Evaluation Report, Long-Term Stormwater Treatment, 2012-2013, North Boeing Field, Seattle, Washington*. Prepared for The Boeing Company. March 7.

Landau Associates 2014b. *Annual Performance Evaluation Report, Long-Term Stormwater Treatment, 2012-2013, North Boeing Field, Seattle, Washington*. Prepared for The Boeing Company. March 7.

Landau Associates 2013. *Annual Performance Evaluation Report, Long-Term Stormwater Treatment, 2011-2012, North Boeing Field, Seattle, Washington*. Prepared for The Boeing Company. March 28.

Landau Associates 2012a. *Sampling and Analysis Plan, Long-Term Stormwater Treatment, North Boeing Field, Seattle, Washington*. Prepared for The Boeing Company. March 21.

Landau Associates. 2012b. *Removal Action/Stormwater Treatment Completion Report, North Boeing Field, Seattle, Washington*. Prepared for The Boeing Company. March 23.

Landau Associates. 2011a. *Removal Action Work Plan, Short-Term Stormwater Treatment, North Boeing Field, Seattle, Washington*. Prepared for The Boeing Company. January 7.

Landau Associates. 2011b. *Technical Memorandum: November 2011 Progress Report, North Boeing Field Stormwater Treatment, Lower Duwamish Waterway Superfund Site, EPA Docket No. CERCLA-10-2010-0242*. From Kristi Hendrickson and Joseph Kalmar, Landau Associates, to Karen Keeley, U.S. Environmental Protection Agency. December 5.

Landau Associates. 2011c. *100% Design Report, Long-Term Stormwater Treatment, North Boeing Field, Seattle, Washington*. Prepared for The Boeing Company. June 24.

Landau Associates. 2010. *Proposed Design, Short-Term Stormwater Treatment Facility, North Boeing Field, Seattle, Washington*. Prepared for The Boeing Company. July 15.

SAIC. 2011. *North Boeing Field/Georgetown Steam Plant Site Remedial Investigation/ Feasibility Study: Assessment of Infiltration and Inflow to North Boeing Field Storm Drain System*. Prepared for the Washington State Department of Ecology. Science Applications International Corporation. February.

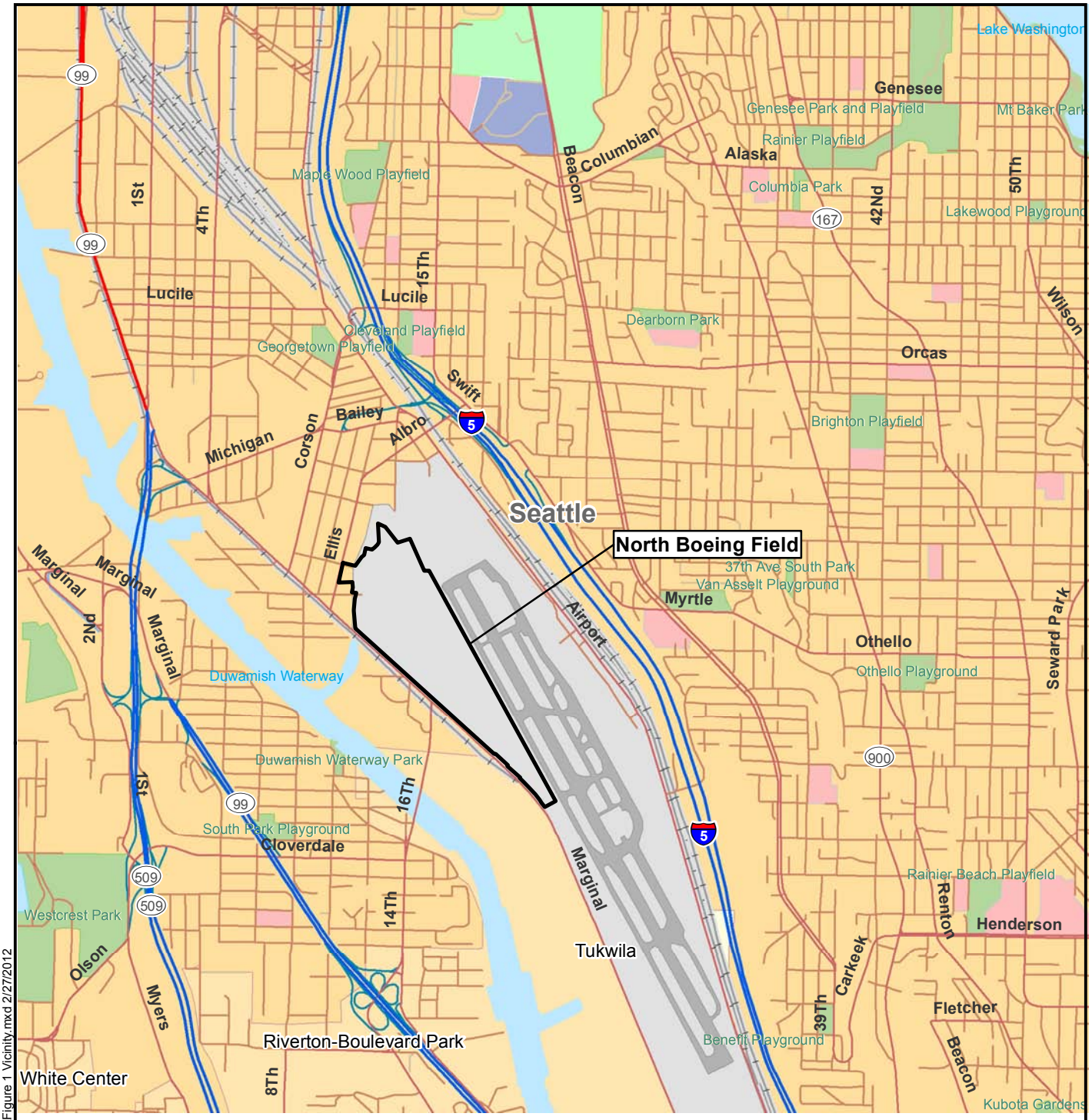

N

0 0.5 1
Miles

Data Source: ESRI 2008

Y:\Projects\025082\MapDocs\311\Completion Report\Figure 1 Vicinity.mxd 2/27/2012

LANDAU ASSOCIATES

North Boeing Field Seattle, Washington	**Vicinity Map**	Figure 1

G:\Projects\025\082\214\LTST Treatment\Figure 2-On_Offsite_Basins.mxd NAD 1983 StatePlane Washington North FIPS 4601 Feet

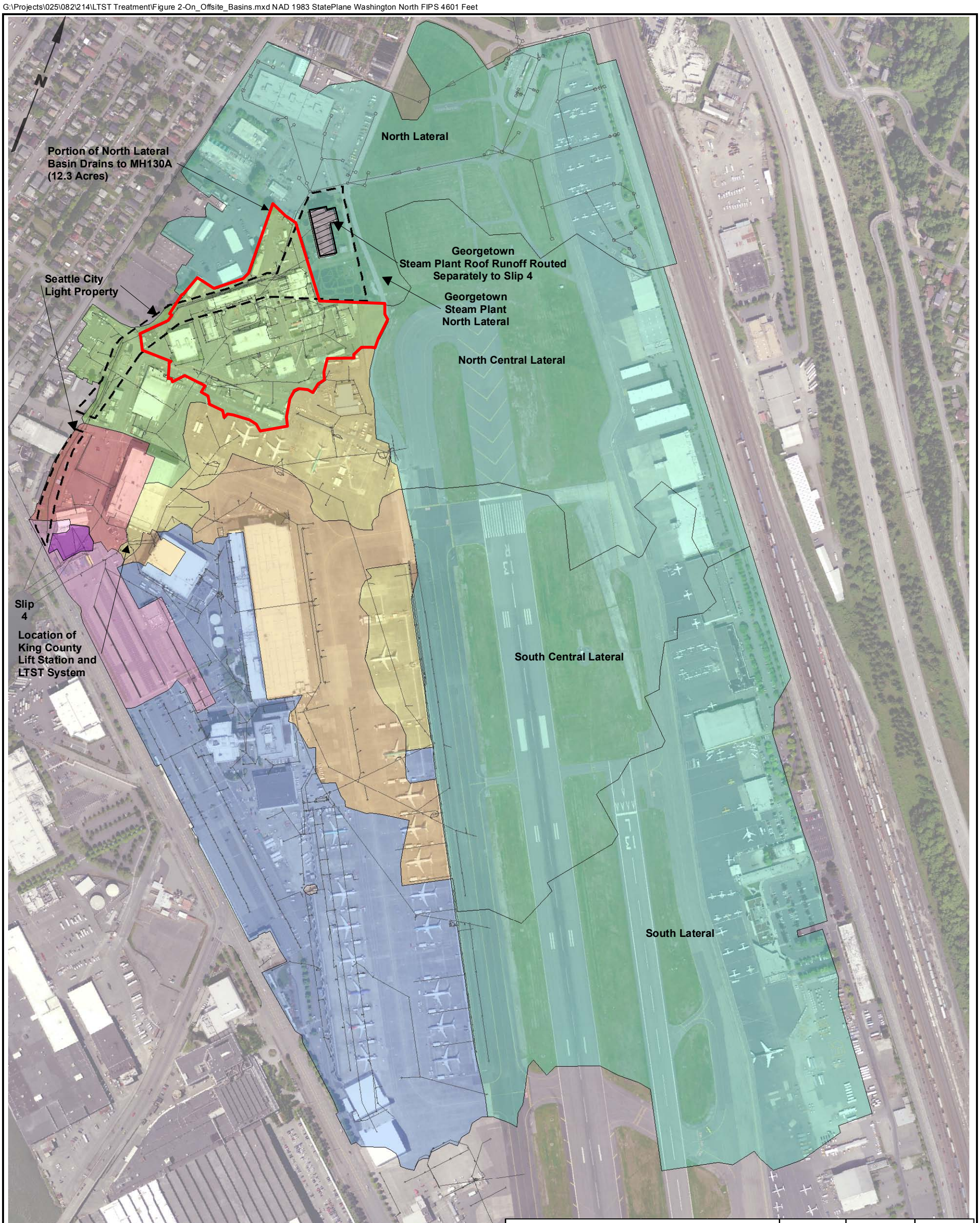

Legend

- MH130 Drainage Basin
- Off-site
- Building 3-380 Area
- North-Central Lateral
- North Lateral
- Parking Lot Area (Downstream of King County Lift Station, LS431)
- South-Central Lateral
- South Lateral
- Area Re-Routed to Combine with 3-380 Drainage Area

North Boeing Field Stormwater Drainage Basin Areas	Onsite Area (Acres)	Offsite Area (Acres)	Total Area (Acres)
North Lateral (Excluding Steam Plant Area)	18.1	37.0	55.1
North Lateral Steam Plant Only - No Roof	0.0	4.1	4.1
North-Central Lateral	14.7	42.6	57.3
South-Central Lateral	21.9	42.7	64.6
South Lateral	46.3	64.3	110.6
Bldg 3-380 Area	4.6	0.0	4.6
Re-Routed to Combine with 3-380 Drainage Area	0.5	0.0	0.5
Total Drainage Area to Lift Station (LS431)	106.1	190.7	296.8
Parking Lot Area (Downstream of KC Lift Station)	6.8	0.0	6.8

0 450 900

Scale in Feet

Data Source: Aerial - SAIC 2009; Conveyance System - The Boeing Company (On-site) and SAIC 2009 (Off-site); Basin Boundaries - The Boeing Company (On-site), SAIC 2009 (Off-site) Figure 2-1 "Storm Drain Lines in the Vicinity of NBF-GTSP Site", and City of Seattle Map "Lower Duwamish Waterway Areas Draining to Slip 4"

Note
1. Black and white reproduction of this color original may reduce its effectiveness and lead to incorrect interpretation.

LANDAU ASSOCIATES

North Boeing Field
Seattle, Washington

North Boeing Field Stormwater Drainage Basins

Figure 2

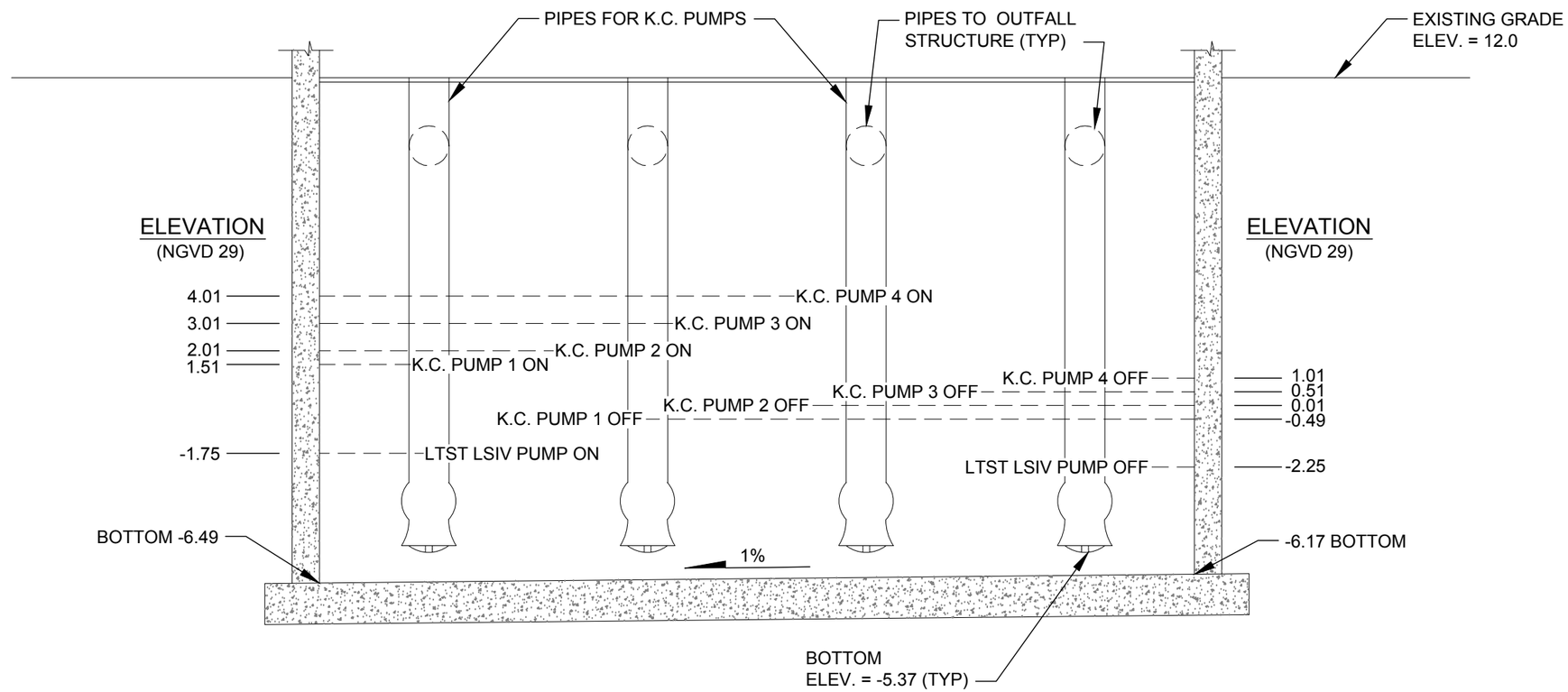

Notes

1. K.C. = King County
2. LTST LSIV pump is on a VFD. The pump on setting at elevation -1.75 triggers a flow rate of approximately 500 gpm. Flow rate is increased with rising water level, up to max LTST system capacity at approximate elevation 0.67.
3. On/Off settings as of February 2013. Settings may be adjusted to optimize treatment system operation.

SOURCE: 1944 AS-BUILT DRAWING PUMPING PLANT NO. 2 PROVIDED BY KING COUNTY

0 5 10
Scale in Feet

LANDAU ASSOCIATES

North Boeing Field Seattle, Washington	**LSIV Section Showing Pump On/Off Settings**	Figure 3

LANDAU ASSOCIATES, INC. | G:\Projects\025\082\2214\004\F03_DETAIL.dwg (A) "Figure 3" 2/27/2014

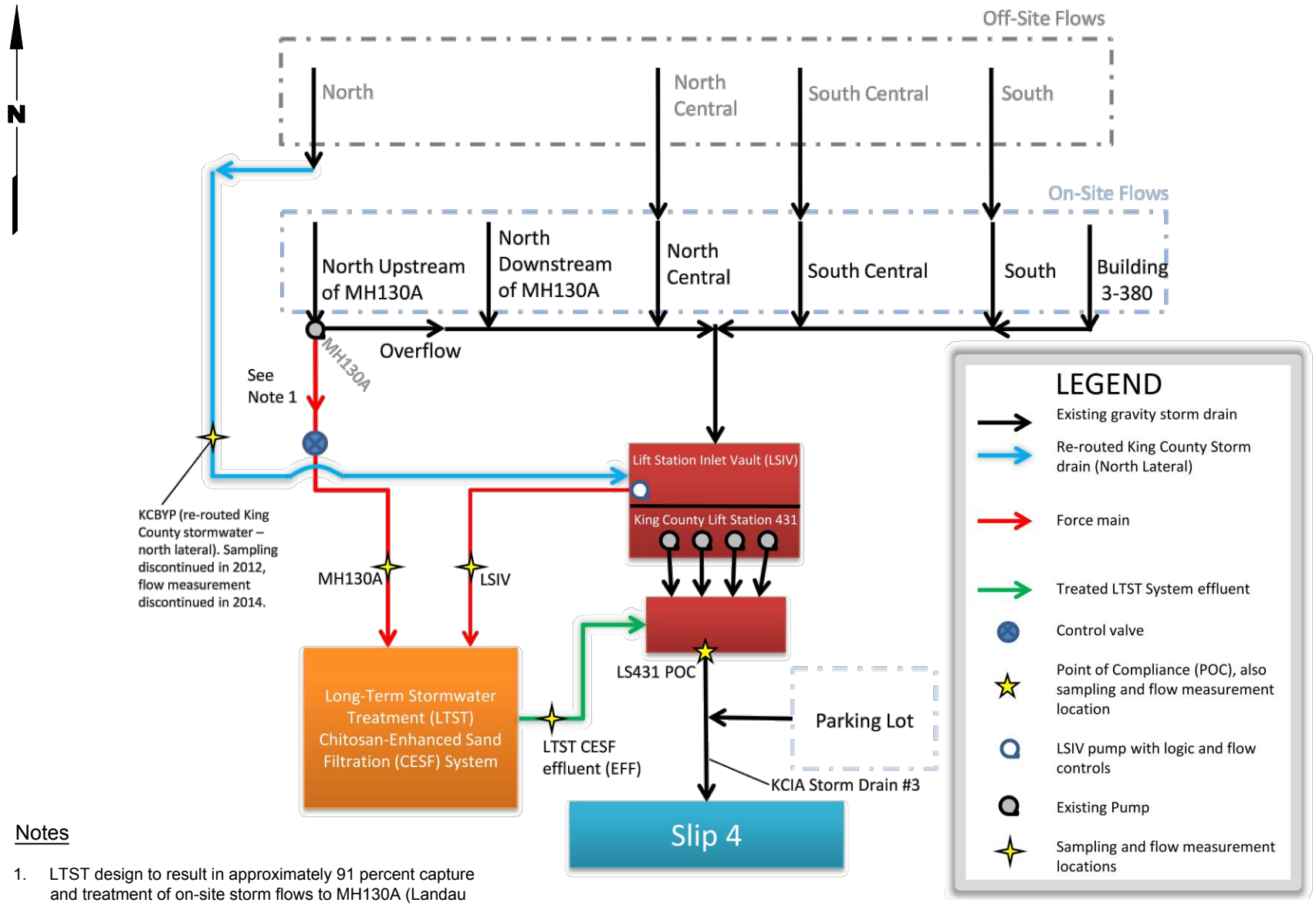

Notes

1. LTST design to result in approximately 91 percent capture and treatment of on-site storm flows to MH130A (Landau Associates 2011a).
2. Black and white reproduction of this color original may reduce its effectiveness and lead to incorrect interpretation.

Source: Adapted from Figure 1 (Jones et. al 2012)

LANDAU ASSOCIATES

North Boeing Field
Seattle, Washington

Schematic Diagram of LTST System Components

Figure 4

G:\Projects\025\082\214\LTST Treatment\Figure 5.mxd 12/4/2013 NAD 1983 StatePlane Washington North FIPS 4601 Feet

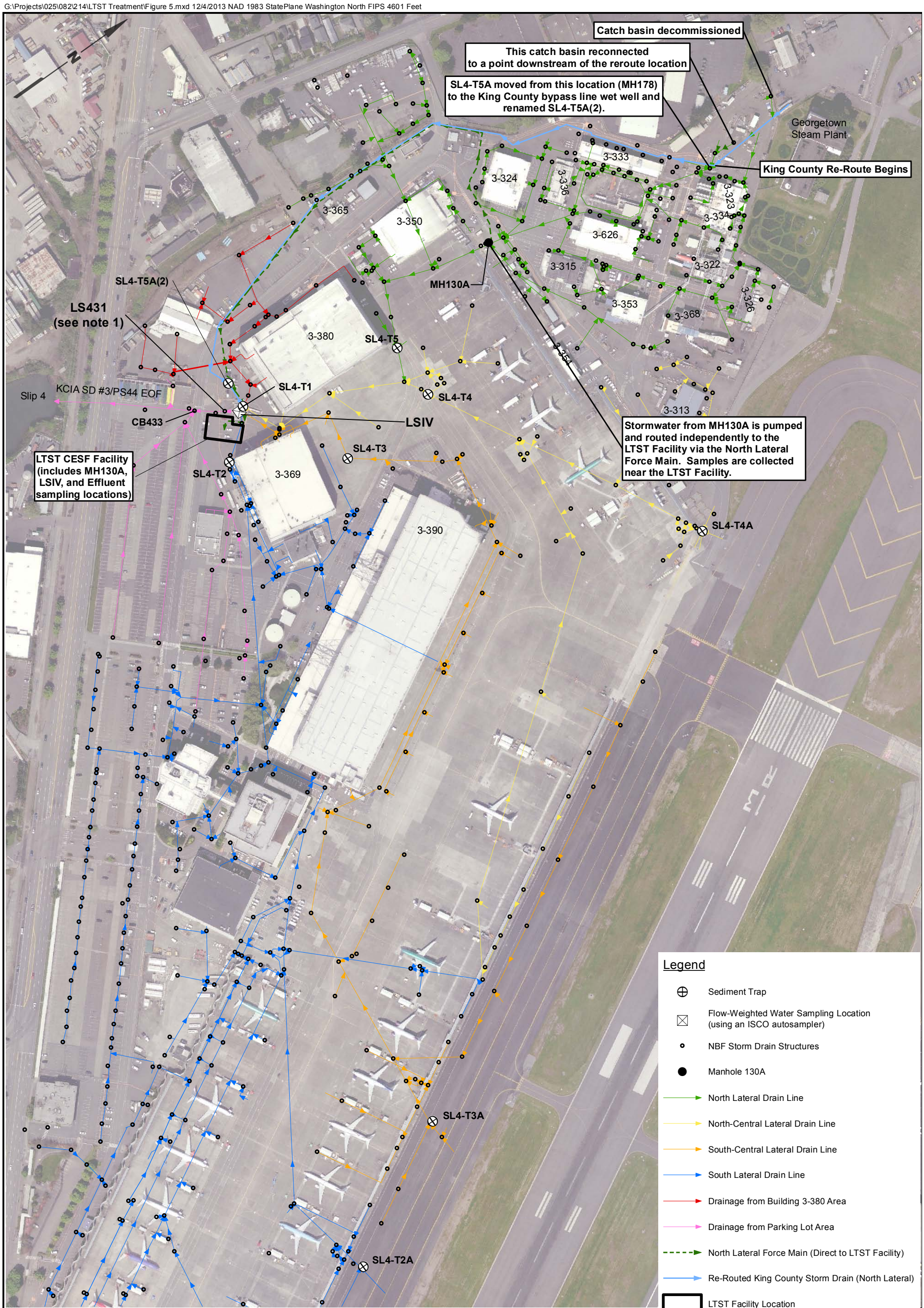

Notes:

1. LS431 is the Point of Compliance (POC).
2. Black and white reproduction of this color original may reduce its effectiveness and lead to incorrect interpretation.

Storm Drain System Data Source: SAIC

0 250 500
Scale in Feet

LANDAU ASSOCIATES

North Boeing Field
Seattle, Washington

Storm Drain System and LTST Sampling Locations

Figure 5

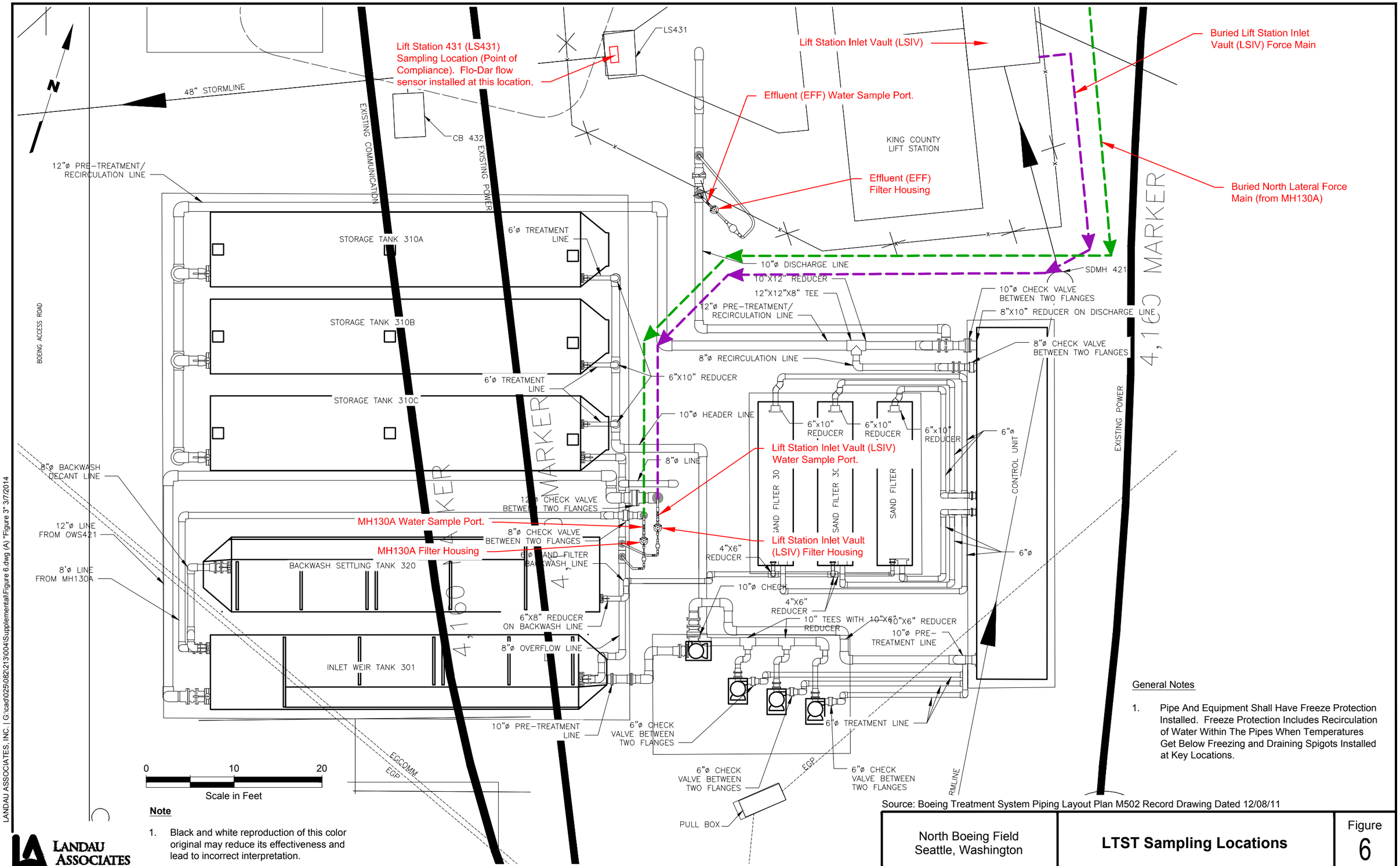

General Notes

1. Pipe And Equipment Shall Have Freeze Protection Installed. Freeze Protection Includes Recirculation of Water Within The Pipes When Temperatures Get Below Freezing and Draining Spigots Installed at Key Locations.

Source: Boeing Treatment System Piping Layout Plan M502 Record Drawing Dated 12/08/11

Note

1. Black and white reproduction of this color original may reduce its effectiveness and lead to incorrect interpretation.

LANDAU ASSOCIATES

North Boeing Field Seattle, Washington	**LTST Sampling Locations**	Figure 6

LANDAU ASSOCIATES, INC. | G:\cad\025\082\213\004\Supplemental\Figure 6.dwg (A) "Figure 3" 3/7/2014

TABLE 1
SUMMARY OF LTST 2013-2014 LTST STORMWATER SAMPLING EVENTS
LONG-TERM STORMWATER TREATMENT SYSTEM
NORTH BOEING FIELD - SEATTLE, WASHINGTON

Event	Begin Date	End Date	Precipitation (inches) (a)	LS431 Whole Water	LSIV		MH130A		Effluent	
					Whole Water	Filtered Solids	Whole Water	Filtered Solids	Whole Water	Filtered Solids
November Monthly	11/4/2013	11/7/2013	0.78 (b)	✓	✓(c)	✓	✓	✓	✓	✓
December Monthly	12/2/2013	12/5/2013	0.12	✓	✓(d)	✓	✓	✓	✓	✓
January Quarterly	1/6/2014	1/9/2014	0.78	✓	✓(c)	✓	✓	✓	✓	✓
February Monthly	2/12/2014	2/12/2014							✓	
March Monthly	3/3/2014	3/3/2014							✓	
April Quarterly	4/7/2014	4/10/2014	0.38	✓(e)	✓(c)	✓	✓	✓	✓	✓
May Monthly	5/1/2014	5/1/2014							✓	
June Monthly	6/2/2014	6/2/2014							✓	
July Quarterly	7/7/2014	7/10/2014	0.00 (j)	✓	✓(d)	✓	✓	✓	✓	✓
August Monthly	8/1/2014	8/1/2014							✓	
September Monthly	9/2/2014	9/2/2014							✓	
October Quarterly	10/6/2014	10/9/2014	0.00 (j)	✓	✓(d)	✓	✓	✓	✓	✓
Storm	11/18/2013	11/19/2013	0.71 (f)	✓	✓(c)	✓	✓	✓	✓	✓
	1/10/2014	1/11/2014	1.06 (g)	✓	✓(c)	✓	✓	✓	✓	✓
	2/16/2014	2/17/2014	1.61 (h)	✓	✓(c)	✓	✓	✓	✓	✓
	3/5/2014	3/6/2014	0.55	✓	✓(c)	✓	✓	✓	✓	(i)
	10/13/2014	10/14/2014	0.63 (k)	✓	✓(c)	✓	✓	✓	✓	✓

✓ = sample collected = sample not required

(a) Precipitation data is from the NOAA Quality Controlled Local Climatological Data for Station 24234/BFI - SEATTLE: BOEING FIELD/KING COUNTY INTERNATIONAL AIRPORT, except where indicated. Precipitation amounts listed for the monthly and storm events are for the LS431 sample collection period. Amounts sometimes differed for other locations. See the appropriate footnote for precipitation amounts in those cases.

(b) During the November monthly event, precipitation during the LSIV flow-weighted composite water sampling was 0.61 inches (less than at LS431), and precipitation during the LSIV, MH130A, and Effluent filtered solids sampling was 0.82 inches (greater than at LS431).

(c) LSIV sample was a flow-weighted composite sample collected during LTST bypass conditions.

(d) LSIV sample was a grab sample collected during non-bypass conditions (no LTST bypass occurred during the sampling event).

(e) The LS431 glass carboy container broke at the laboratory and some of the sample volume was lost; therefore, SVOC and PAH analysis was not performed for the LS431 sample during this routine event.

(f) During the 11/18/2013 - 11/19/2013 storm sampling event, precipitation during the LSIV flow-weighted composite water sampling was 0.61 inches (less than at LS431), and precipitation during the LSIV, MH130A, and Effluent filtered solids sampling was 0.77 inches (greater than at LS431).

(g) During the 1/10/2014 - 1/11/2014 storm sampling event, precipitation during the LSIV, MH130A, and Effluent filtered solids sampling was 1.03 inches (less than at LS431).

(h) During the 2/16/2014 - 2/17/2014 storm sampling event, precipitation during the LSIV flow-weighted composite water sampling was 0.88 inches (less than at LS431), and precipitation during the LSIV, MH130A, and Effluent filtered solids samples was 1.64 inches (greater than at LS431).

(i) A valve on the Effluent filtered solids piping was mistakenly left closed during the sampling event. No stormwater was filtered in the Effluent bag, and the bag was not analyzed for PCBs as was planned.

(j) The KBFI rain gauge appears to have malfunctioned from July 2014 through mid-October 2014, as indicated by an evaluation of KBFI data, other rain gauge data, and LS431 flow data. During this period, precipitation was mostly tracked through the Seattle-Tacoma International Airport rain gage (identified as "KSEA").

(k) The KBFI rain gauge malfunctioned during the 10/13/2014 - 10/14/2014 storm sampling event. The amount listed was taken from the RG16 rain gauge owned by Seattle Public Utilities and located just west of East Marginal Way South and next to Slip 4. LS431 flow data in the sample period indicate bypass of the treatment system occurred in a manner consistent with a storm event of 0.63 inches.

TABLE 2
LS431 WHOLE WATER SAMPLING ANALYTICAL RESULTS
LONG-TERM STORMWATER TREATMENT SYSTEM
NORTH BOEING FIELD - SEATTLE, WASHINGTON

Sample Location ID	LS431-W	LS431-W	LS431-W	LS431-W	LS431-W	LS431-W	LS431-W	LS431-W	LS431-W	LS431-W	LS431-W
Laboratory Data ID	XN18A/XN18E/XN19A	XO76A/XO76C/XO77A	XQ44A/XQ44E/XQ45A	XT98A/XT98E/XT99A	XU48A/XU48C/XU49A	XZ68A/XZ68E/XZ69A	YB86A/YB86C/YB88A	YG17A/YG17C/YG18A	YR11A/YR11E/YR12A	ZE23A/ZE23E/ZE24A	ZF08A/ZF08E/ZF09A
Sample Start Date	11/4/2013	11/18/2013	12/2/2013	1/6/2014	1/10/2014	2/16/2014	3/5/2014	4/7/2014	7/7/2014	10/6/2014	10/13/2014
Sample End Date	11/7/2013	11/19/2013	12/5/2013	1/9/2014	1/11/2014	2/17/2014	3/6/2014	4/10/2014	7/10/2014	10/9/2014	10/14/2014
Event Type	Monthly	Storm	Monthly	Quarterly	Storm	Storm	Storm	Quarterly	Quarterly	Quarterly	Storm
Sample Type	Flow-weighted composite										
PCBs (µg/L) (a)											
Method SW8082A											
Aroclor 1016	0.005 U	0.005 U	0.005 U	0.005 U	0.005 U	0.005 U	0.005 U	0.005 U	0.005 U	0.005 U	0.005 U
Aroclor 1242	0.005 U	0.005 U	0.005 U	0.005 U	0.005 U	0.005 U	0.005 U	0.005 U	0.005 U	0.008 U	0.005 U
Aroclor 1248	0.005 U	0.005 U	0.005 U	0.005 U	0.005 U	0.005 U	0.005 U	0.005 U	0.005 U	0.005 U	0.005 U
Aroclor 1254	**0.013**	0.005 U	0.005 U	0.005 U	**0.012**	**0.010**	0.005 U	0.005 U	0.005 U	0.005 U	**0.011**
Aroclor 1260	0.005 U	0.005 U	0.005 U	0.005 U	0.005 U	0.005 U	0.005 U	0.005 U	0.005 U	0.005 U	**0.011**
Aroclor 1221	0.005 U	0.005 U	0.005 U	0.005 U	0.005 U	0.005 U	0.005 U	0.005 U	0.005 U	0.005 U	0.005 U
Aroclor 1232	0.005 U	0.005 U	0.005 U	0.015 U	0.005 U	0.005 U	0.005 U	0.005 U	0.010 U	0.005 U	0.005 U
Aroclor 1262	0.005 U	0.005 U	0.005 U	0.005 U	0.005 U	0.005 U	0.005 U	0.005 U	0.005 U	0.005 U	0.005 U
Total PCBs (b)	**0.013**	ND	ND	ND	**0.012**	**0.010**	ND	ND	ND	ND	**0.022**
SEMIVOLATILES (µg/L)											
Method SW8270D											
Phenol	1.0 U	1.0 U	1.0 U	1.0 U	1.0 U	1.0 U	1.0 U	NA	1.0 U	1.0 U	1.0 U
1,3-Dichlorobenzene	1.0 U	1.0 U	1.0 U	1.0 U	1.0 U	1.0 U	1.0 U	NA	1.0 U	1.0 U	1.0 U
1,4-Dichlorobenzene	1.0 U	1.0 U	1.0 U	1.0 U	1.0 U	1.0 U	1.0 U	NA	1.0 U	1.0 U	1.0 U
Benzyl Alcohol	2.0 U	2.0 U	2.0 UJ	2.0 U	2.0 U	2.0 U	2.0 U	NA	2.0 U	2.0 U	2.0 UJ
1,2-Dichlorobenzene	1.0 U	1.0 U	1.0 U	1.0 U	1.0 U	1.0 U	1.0 U	NA	1.0 U	1.0 U	1.0 U
2-Methylphenol	1.0 U	1.0 U	1.0 U	1.0 U	1.0 U	1.0 U	1.0 U	NA	1.0 UJ	1.0 U	1.0 U
4-Methylphenol	2.0 U	2.0 U	2.0 U	2.0 U	2.0 U	2.0 U	2.0 U	NA	2.0 UJ	2.0 U	2.0 U
Hexachloroethane	2.0 U	2.0 U	2.0 U	2.0 U	2.0 U	2.0 U	2.0 U	NA	2.0 UJ	2.0 U	2.0 U
2,4-Dimethylphenol	3.0 U	3.0 U	3.0 U	3.0 U	3.0 U	3.0 U	3.0 U	NA	3.0 U	3.0 U	3.0 U
Benzoic Acid	20 U	20 U	20 UJ	20 UJ	20 UJ	20 U	20 U	NA	20 UJ	20 UJ	20 U
1,2,4-Trichlorobenzene	1.0 U	1.0 U	1.0 U	1.0 U	1.0 U	1.0 U	1.0 U	NA	1.0 U	1.0 U	1.0 U
Naphthalene	1.0 U	1.0 U	1.0 U	1.0 U	1.0 U	1.0 U	1.0 U	NA	1.0 UJ	1.0 U	1.0 U
Hexachlorobutadiene	3.0 U	3.0 U	3.0 U	3.0 U	3.0 U	3.0 U	3.0 U	NA	3.0 U	3.0 U	3.0 U
2-Methylnaphthalene	1.0 U	1.0 U	1.0 U	1.0 U	1.0 U	1.0 U	1.0 U	NA	1.0 U	1.0 U	1.0 U
Dimethylphthalate	1.0 U	1.0 U	1.0 U	1.0 U	1.0 U	1.0 U	1.0 U	NA	1.0 UJ	1.0 U	1.0 U
Acenaphthylene	1.0 U	1.0 U	1.0 U	1.0 U	1.0 U	1.0 U	1.0 U	NA	1.0 U	1.0 U	1.0 U
Acenaphthene	1.0 U	1.0 U	1.0 U	1.0 U	1.0 U	1.0 U	1.0 U	NA	1.0 UJ	1.0 U	1.0 U
Dibenzofuran	1.0 U	1.0 U	1.0 U	1.0 U	1.0 U	1.0 U	1.0 U	NA	1.0 U	1.0 U	1.0 U
Diethylphthalate	1.0 U	1.0 U	1.0 U	1.0 U	1.0 U	1.0 U	1.0 U	NA	1.0 UJ	1.0 U	1.0 U
Fluorene	1.0 U	1.0 U	1.0 U	1.0 U	1.0 U	1.0 U	1.0 U	NA	1.0 UJ	1.0 U	1.0 U
N-Nitrosodiphenylamine	1.0 U	1.0 U	1.0 U	1.0 U	1.0 U	1.0 U	1.0 U	NA	1.0 U	1.0 U	1.0 U
Hexachlorobenzene	1.0 U	1.0 U	1.0 U	1.0 U	1.0 U	1.0 U	1.0 U	NA	1.0 U	1.0 U	1.0 U
Pentachlorophenol	10 U	10 U	10 UJ	10 UJ	10 U	10 U	10 U	NA	10 U	10 UJ	10 UJ
Phenanthrene	1.0 U	1.0 U	1.0 U	1.0 U	1.0 U	1.0 U	1.0 U	NA	1.0 UJ	1.0 U	1.0 U
Anthracene	1.0 U	1.0 U	1.0 U	1.0 U	1.0 U	1.0 U	1.0 U	NA	1.0 U	1.0 U	1.0 U
Di-n-Butylphthalate	1.0 U	1.0 U	1.0 U	1.0 U	1.0 U	1.0 U	1.0 U	NA	1.0 UJ	1.0 U	1.0 U
Fluoranthene	1.0 U	1.0 U	1.0 U	1.0 U	1.0 U	1.0 U	1.0 U	NA	1.0 U	1.0 U	1.0 U
Pyrene	1.0 U	1.0 U	1.0 U	1.0 U	1.0 U	1.0 U	1.0 U	NA	1.0 U	1.0 U	1.0 U
Butylbenzylphthalate	1.0 U	1.0 U	1.0 U	1.0 U	1.0 U	**1.5**	1.0 U	NA	1.0 UJ	1.0 U	1.0 U
Benzo(a)anthracene	1.0 U	1.0 U	1.0 U	1.0 U	1.0 U	1.0 U	1.0 U	NA	1.0 U	1.0 U	1.0 U
bis(2-Ethylhexyl)phthalate	3.0 U	3.0 U	**6.1**	3.0 U	3.0 U	3.0 U	3.0 U	NA	3.0 U	3.0 U	3.0 U
Chrysene	1.0 U	1.0 U	1.0 U	1.0 U	1.0 U	1.0 U	1.0 U	NA	1.0 U	1.0 U	1.0 U
Di-n-Octyl phthalate	1.0 U	1.0 U	1.0 U	1.0 U	1.0 U	1.0 U	1.0 U	NA	1.0 U	1.0 U	1.0 U
Benzo(a)pyrene	1.0 U	1.0 U	1.0 U	1.0 U	1.0 U	1.0 U	1.0 U	NA	1.0 U	1.0 U	1.0 U
Indeno(1,2,3-cd)pyrene	1.0 U	1.0 U	1.0 U	1.0 U	1.0 U	1.0 U	1.0 U	NA	1.0 UJ	1.0 U	1.0 U
Dibenz(a,h)anthracene	1.0 U	1.0 U	1.0 U	1.0 U	1.0 U	1.0 U	1.0 U	NA	1.0 UJ	1.0 U	1.0 U
Benzo(g,h,i)perylene	1.0 U	1.0 U	1.0 U	1.0 UJ	1.0 U	1.0 U	1.0 U	NA	1.0 UJ	1.0 U	1.0 U
1-Methylnaphthalene	1.0 U	1.0 U	1.0 U	1.0 U	1.0 U	1.0 U	1.0 U	NA	1.0 U	1.0 U	1.0 U
Total Benzofluoranthenes	5.0 U	5.0 U	5.0 U	5.0 U	5.0 U	5.0 U	5.0 U	NA	2.0 U	2.0 U	2.0 U

TABLE 2
LS431 WHOLE WATER SAMPLING ANALYTICAL RESULTS
LONG-TERM STORMWATER TREATMENT SYSTEM
NORTH BOEING FIELD - SEATTLE, WASHINGTON

Sample Location ID	LS431-W	LS431-W	LS431-W	LS431-W	LS431-W	LS431-W	LS431-W	LS431-W	LS431-W	LS431-W	LS431-W
Laboratory Data ID	XN18A/XN18E/XN19A	XO76A/XO76C/XO77A	XQ44A/XQ44E/XQ45A	XT98A/XT98E/XT99A	XU48A/XU48C/XU49A	XZ68A/XZ68E/XZ69A	YB86A/YB86C/YB88A	YG17A/YG17C/YG18A	YR11A/YR11E/YR12A	ZE23A/ZE23E/ZE24A	ZF08A/ZF08E/ZF09A
Sample Start Date	11/4/2013	11/18/2013	12/2/2013	1/6/2014	1/10/2014	2/16/2014	3/5/2014	4/7/2014	7/7/2014	10/6/2014	10/13/2014
Sample End Date	11/7/2013	11/19/2013	12/5/2013	1/9/2014	1/11/2014	2/17/2014	3/6/2014	4/10/2014	7/10/2014	10/9/2014	10/14/2014
Event Type	Monthly	Storm	Monthly	Quarterly	Storm	Storm	Storm	Quarterly	Quarterly	Quarterly	Storm
Sample Type	Flow-weighted composite										
PAHs (µg/L)											
Method SW8270D-SIM											
Naphthalene	**0.017**	0.010 U	**0.010**	**0.018**	**0.046**	**0.043**	**0.012**	NA	0.010 U	**0.010**	**0.012**
2-Methylnaphthalene	**0.016**	0.010 U	0.010 U	**0.026**	**0.021**	**0.047**	0.010 U	NA	0.010 U	0.010 U	**0.018**
1-Methylnaphthalene	**0.022**	**0.012**	**0.011**	**0.030**	**0.030**	**0.039**	0.010 U	NA	0.010 U	0.010 U	**0.021**
Acenaphthylene	0.010 U	0.010 U	0.010 U	0.010 U	0.010 U	0.010 U	0.010 U	NA	0.010 U	0.010 U	0.010 U
Acenaphthene	0.010 U	0.010 U	**0.022**	**0.013**	**0.011**	**0.057**	0.010 U	NA	0.010 U	**0.088**	**0.010**
Fluorene	0.010 U	0.010 U	0.010 U	0.010 U	0.010 U	**0.058**	0.010 U	NA	0.010 U	0.010 U	0.010 U
Phenanthrene	**0.046**	**0.013**	0.010 U	**0.025**	**0.067**	**0.49**	0.013 U	NA	0.010 U	0.010 U	**0.048**
Anthracene	0.010 U	0.010 U	0.010 U	0.010 U	0.010 U	**0.062**	0.010 U	NA	0.010 U	0.010 U	0.010 U
Fluoranthene	**0.11**	**0.042**	**0.010**	**0.050**	**0.19**	**0.83**	0.041 U	NA	0.010 U	0.010 U	**0.11**
Pyrene	**0.14**	**0.045**	0.010 U	**0.038** J	**0.17**	**0.67**	**0.030**	NA	0.010 U	0.010 U	**0.083**
Benzo(a)anthracene	**0.041**	0.010 U	0.010 U	0.010 U	**0.054**	**0.20**	0.010 U	NA	0.010 U	0.010 U	**0.018**
Chrysene	**0.12**	**0.041**	0.010 U	**0.030**	**0.14**	**0.38**	**0.026**	NA	0.010 U	0.010 U	**0.082**
Benzo(a)pyrene	**0.065**	**0.015**	0.010 U	**0.013**	**0.088**	**0.23**	**0.012**	NA	0.010 U	0.010 U	**0.033**
Indeno(1,2,3-cd)pyrene	**0.080**	**0.022**	0.010 U	**0.017**	**0.12**	**0.20**	**0.015**	NA	0.010 U	0.010 U	**0.050**
Dibenz(a,h)anthracene	**0.016**	0.010 U	0.010 U	0.010 U	**0.026**	**0.045** J	0.010 U	NA	0.010 U	0.010 UJ	0.010 U
Benzo(g,h,i)perylene	**0.11**	**0.031**	0.010 U	**0.022**	**0.14** J	**0.20**	**0.016**	NA	0.010 U	0.010 U	**0.066**
Dibenzofuran	0.010 U	0.010 U	0.010 U	0.010 U	0.010 U	**0.038**	0.010 U	NA	0.010 U	0.010 U	0.010 U
Total Benzofluoranthenes	**0.18**	**0.051**	0.020 U	**0.044** J	**0.24**	**0.57**	**0.043**	NA	0.020 U	0.020 U	**0.14**
CPAH TEQ	**0.098**	**0.023**	ND	**0.019**	**0.133**	**0.335**	**0.018**	NA	ND	ND	**0.055**
TOTAL METALS (µg/L)											
Method EPA200.8/6010B,C/7470A											
Arsenic	**0.5**	**0.4**	**0.9**	**0.4**	**0.4**	**0.5**	**0.4**	**0.7**	**0.7**	**0.8**	**0.8**
Cadmium	**0.2**	**0.1**	**0.3**	0.1 U	**0.2**	**0.2**	**0.1**	**0.1**	0.1 U	0.1 U	**0.2**
Chromium	1 U	**0.7**	**0.7**	**0.6**	**0.8**	**1.8** J	**0.8**	**0.6**	**2**	**0.6**	**1.3**
Copper	**3.6**	**2.5**	**2.8**	**2.4**	**4.4**	**4.8**	**3.3**	**3.8**	**2.5**	0.5 U	**4.8**
Iron	**2060**	**2510**	**5130**	**790**	**1350**	**1210**	**1110**	**5870**	**5040**	**1570**	**3450**
Lead	**2.0**	**1.0**	**1.0**	**0.6**	**2.1**	**2.4**	**0.8**	**0.7**	**0.2**	0.1 U	**2.3**
Manganese	**276**	**68**	**2120**	**242**	**101**	**44**	**81**	**820**	**450**	**1010**	**63**
Mercury	0.1 U	0.1 U	0.1 U	0.1 U	0.1 U	0.1 U	0.1 U	0.1 U	0.1 U	0.1 U	0.1 U
Nickel	**0.9**	**0.7**	**2.3**	**1.0**	**0.5**	**3.3**	**2.7**	**1.2**	**1.7**	**2.0**	**1.0**
Zinc	**27**	**22**	**59**	**21**	**34**	**33**	**24**	**19**	**4**	4 U	**33**
DISSOLVED METALS (µg/L)											
Method EPA200.8/6010C											
Arsenic	**0.3**	**0.2**	**0.5**	**0.2**	**0.2**	**0.2**	**0.3**	**0.3**	**0.6**	**0.6**	**0.3**
Cadmium	0.1 U	0.1 U	0.1 U	0.1 U	0.1 U	0.1 U	0.1 U	0.1 U	0.1 U	0.1 U	0.1 U
Chromium	0.5 U	0.5 U	0.5 U	0.5 U	0.5 U	**1.1** J	0.5 U	1 U	**2**	0.5 U	0.5 U
Copper	**1.6**	**1.3**	**0.8**	**1.3**	**1.4**	**1.6** J	**2.3**	**2.4**	**2.2**	0.5 U	**1.4**
Iron	**110**	**180**	50 U	50 U	**190**	**130**	**430**	**230**	**3760**	**110**	**160**
Lead	**0.3**	**0.1**	0.1 U	0.1 U	**0.1**	0.1 U	**0.2**	0.1 U	**0.1**	0.1 U	0.1 U
Manganese	**245**	**55**	**674**	**219**	**79**	**22**	**62**	**322**	**398**	**862**	**35**
Nickel	**0.7**	0.5 U	**1.2**	**0.9**	0.5 U	**2.4**	**2.4**	**0.8**	**1.2**	**1.7**	0.5 U
Zinc	**11**	**11**	**8**	**13**	**19**	**16**	**19**	**8**	4 U	4 U	**9**
DISSOLVED METALS (ng/L)											
Method SW7470A											
Mercury	20.0 U	20.0 U	20.0 U	20.0 U	20.0 U	20.0 U	20.0 U	20.0 U	20.0 U	20.0 U	20.0 U
CONVENTIONALS											
pH (SU; EPA 150.1)	**7.18**	**6.53**	**7.35**	**6.83**	NA	NA	NA	NA	NA	NA	NA
Total Suspended Solids (mg/L; SM2540D)	**14.0**	**10.4**	**8.6**	**6.9**	**15.9**	**43.3**	**9.0**	**13.2**	**2.1**	**12.6**	**20.4**
Turbidity (NTU; EPA 180.1)	**6.08**	**11.2**	**4.26**	**3.03**	**3.33**	**2.35**	**3.77**	**14.1**	**15.0**	**8.19**	**16.1**

TABLE 2
LS431 WHOLE WATER SAMPLING ANALYTICAL RESULTS
LONG-TERM STORMWATER TREATMENT SYSTEM
NORTH BOEING FIELD - SEATTLE, WASHINGTON

Sample Location ID	LS431-W	LS431-W	LS431-W	LS431-W	LS431-W	LS431-W	LS431-W	LS431-W	LS431-W	LS431-W	LS431-W
Laboratory Data ID	XN18A/XN18E/XN19A	XO76A/XO76C/XO77A	XQ44A/XQ44E/XQ45A	XT98A/XT98E/XT99A	XU48A/XU48C/XU49A	XZ68A/XZ68E/XZ69A	YB86A/YB86C/YB88A	YG17A/YG17C/YG18A	YR11A/YR11E/YR12A	ZE23A/ZE23E/ZE24A	ZF08A/ZF08E/ZF09A
Sample Start Date	11/4/2013	11/18/2013	12/2/2013	1/6/2014	1/10/2014	2/16/2014	3/5/2014	4/7/2014	7/7/2014	10/6/2014	10/13/2014
Sample End Date	11/7/2013	11/19/2013	12/5/2013	1/9/2014	1/11/2014	2/17/2014	3/6/2014	4/10/2014	7/10/2014	10/9/2014	10/14/2014
Event Type	Monthly	Storm	Monthly	Quarterly	Storm	Storm	Storm	Quarterly	Quarterly	Quarterly	Storm
Sample Type	Flow-weighted composite										
PARTICLE/GRAIN SIZE (mg/L)											
Method ASTM-D3977C											
Sediment Conc. > 500 µm	**9.78**	0.01 U	**3.52**	**1.71**	**1.18**	NA	NA	NA	NA	NA	NA
Sediment Conc. 500 to 250 µm	**11.17**	**1.52**	**3.09**	**3.21**	**1.94**	NA	NA	NA	NA	NA	NA
Sediment Conc. 250 to 125 µm	0.01 U	0.01 U	**3.49**	0.01 U	0.01 U	NA	NA	NA	NA	NA	NA
Sediment Conc. 125 to 62.5 µm	0.01 U	0.01 U	**2.32**	0.01 U	0.01 U	NA	NA	NA	NA	NA	NA
Sediment Conc. 62.5 to 3.9 µm	**15.31**	**7.47**	**0.75**	0.01 U	**8.35**	NA	NA	NA	NA	NA	NA
Sediment Conc. 3.9 to 1 µm	**1.43**	**1.28**	**0.24**	**1.72**	**1.17**	NA	NA	NA	NA	NA	NA
Sediment Conc. < 1 µm	**1.96**	**1.10**	0.01 U	**11.20**	**1.59**	NA	NA	NA	NA	NA	NA
PRECIPITATION (c)											
Amount During Test (inches)	0.78	0.71	0.12	0.78	1.06	1.61	0.55	0.38	0.00	0.00	0.63

TEQ = Total Equivalency Quotient
cPAH = Carcinogenic Polycyclic Aromatic Hydrocarbon
PCB = Polychlorinated Biphenyl
SIM = Select Ion Monitoring

-- = Not applicable (grab sample does not require start/end date).
NA = Not Analyzed.
ND = Not Detected.
Bold = Detected compound.

EPA = U.S. Environmental Protection Agency
ASTM = American Society for Testing and Materials
ARI = Analytical Resources Inc.
NOAA = National Oceanic and Atmospheric Administration

µg/L = micrograms per liter
mg/L = milligrams per liter
µm = micrometer
ng/L = nanograms per liter

SU = Standard Units
NTU = Nephelometric Turbidity Units

B = Analyte detected in an associated Method Blank at a concentration greater than one-half of ARI's limit of quantitation or 5% of the regulatory limit or 5% of the analyte concentration in the sample.
J = Indicates the analyte was positively identified; the associated numerical value is the approximate concentration of the analyte in the sample.
U = Indicates the compound was not detected at the reported concentration.
Blue = Validation process not completed.

(a) Starting in December 2012, ARI evaluated PCBs in whole water between the Limit of Detection (LOD) and the Limit of Quantitation (LOQ). For these non-detect results, the reported concentration shown is the LOD (1/2 the LOQ).
(b) Total PCBs is the sum of detected aroclors or, if no aroclors are detected, is reported as non-detect (ND).
(c) Precipitation data is from the NOAA Quality Controlled Local Climatological Data for Station 24234/BFI - SEATTLE: BOEING FIELD/KING COUNTY INTERNATIONAL AIRPORT.

TABLE 3
MH130A WHOLE WATER SAMPLING ANALYTICAL RESULTS
LONG-TERM STORMWATER TREATMENT SYSTEM
NORTH BOEING FIELD - SEATTLE, WASHINGTON

Sample Location ID	LTST-W-MH130A	LTST-W-MH130A	LTST-W-MH130A	LTST-W-MH130A	LTST-W-MH130A	LTST-W-MH130A	LTST-W-MH130A	LTST-W-MH130A	LTST-W-MH130A
Laboratory Data ID	XN18C/XN18G/XN19C	XO61A/XO61C/XO79A	XQ44C/XQ44G/XQ45C	XT98C/XT98G/XT99C	XU37A/XU37C/XU42A	XZ68C/XZ68G/XZ69C	YB46A/YB46C/YB47A	YF79A/YF79C/YF80A	YR11C/YR11G/YR12C
Sample Date	11/7/2013	11/18/2013	12/5/2013	1/9/2014	1/10/2014	2/16/2014	3/5/2014	4/8/2014	7/10/2014
Event Type	Monthly	Storm	Monthly	Quarterly	Storm	Storm	Storm	Quarterly	Quarterly
Sample Type	Grab	Grab	Grab	Grab	Grab	Grab	Grab	Grab	Grab
PCBs (µg/L) (a)									
Method SW8082A									
Aroclor 1016	0.005 U	0.005 U	0.005 U	0.005 U	0.005 U	0.005 U	0.005 U	0.005 U	0.005 U
Aroclor 1242	0.005 U	0.005 U	0.13 U	0.005 U	0.005 U	0.005 U	0.005 U	0.005 U	0.005 U
Aroclor 1248	0.025 U	0.013 U	0.005 U	0.013 U	0.025 U	0.05 U	0.13 U	0.13 U	0.18 U
Aroclor 1254	**0.030**	**0.037**	**0.059**	**0.034**	**0.041**	**0.049**	**0.37**	**0.10**	**0.098**
Aroclor 1260	**0.013**	**0.0080** J1	0.005 U	**0.011** J	**0.014**	**0.014**	0.019 U	0.005 U	0.005 U
Aroclor 1221	0.005 U	0.005 U	0.005 U	0.005 U	0.005 U	0.005 U	0.005 U	0.005 U	0.005 U
Aroclor 1232	0.005 U	0.005 U	0.005 U	0.005 U	0.005 U	0.005 U	0.005 U	0.005 U	0.005 U
Aroclor 1262	0.005 U	0.005 U	0.005 U	0.005 U	0.005 U	0.005 U	0.005 U	0.005 U	0.005 U
Total PCBs (b)	**0.043**	**0.045**	**0.059**	**0.045**	**0.055**	**0.063**	**0.37**	**0.10**	**0.098**
SEMIVOLATILES (µg/L)									
Method SW8270D									
Phenol	1.0 U	NA	NA	1.0 U	1.0 U	NA	1.0 U	NA	1.0 U
1,3-Dichlorobenzene	1.0 U	NA	NA	1.0 U	1.0 U	NA	1.0 U	NA	1.0 U
1,4-Dichlorobenzene	1.0 U	NA	NA	1.0 U	1.0 U	NA	1.0 U	NA	1.0 U
Benzyl Alcohol	2.0 U	NA	NA	2.0 U	2.0 U	NA	2.0 U	NA	2.0 U
1,2-Dichlorobenzene	1.0 U	NA	NA	1.0 U	1.0 U	NA	1.0 U	NA	1.0 U
2-Methylphenol	1.0 U	NA	NA	1.0 U	1.0 U	NA	1.0 U	NA	1.0 UJ
4-Methylphenol	2.0 U	NA	NA	2.0 U	2.0 U	NA	2.0 U	NA	2.0 UJ
Hexachloroethane	2.0 U	NA	NA	2.0 U	2.0 U	NA	2.0 U	NA	2.0 UJ
2,4-Dimethylphenol	3.0 U	NA	NA	3.0 U	3.0 U	NA	3.0 U	NA	3.0 U
Benzoic Acid	20 U	NA	NA	20 UJ	20 UJ	NA	20 U	NA	20 UJ
1,2,4-Trichlorobenzene	1.0 U	NA	NA	1.0 U	1.0 U	NA	1.0 U	NA	1.0 U
Naphthalene	1.0 U	NA	NA	1.0 U	1.0 U	NA	1.0 U	NA	1.0 UJ
Hexachlorobutadiene	3.0 U	NA	NA	3.0 U	3.0 U	NA	3.0 U	NA	3.0 U
2-Methylnaphthalene	1.0 U	NA	NA	1.0 U	1.0 U	NA	1.0 U	NA	1.0 U
Dimethylphthalate	1.0 U	NA	NA	1.0 U	1.0 U	NA	1.0 U	NA	1.0 UJ
Acenaphthylene	1.0 U	NA	NA	1.0 U	1.0 U	NA	1.0 U	NA	1.0 U
Acenaphthene	1.0 U	NA	NA	1.0 U	1.0 U	NA	1.0 U	NA	1.0 UJ
Dibenzofuran	1.0 U	NA	NA	1.0 U	1.0 U	NA	1.0 U	NA	1.0 U
Diethylphthalate	1.0 U	NA	NA	1.0 U	1.0 U	NA	1.0 U	NA	1.0 UJ
Fluorene	1.0 U	NA	NA	1.0 U	1.0 U	NA	1.0 U	NA	1.0 UJ
N-Nitrosodiphenylamine	1.0 U	NA	NA	1.0 U	1.0 U	NA	1.0 U	NA	1.0 U
Hexachlorobenzene	1.0 U	NA	NA	1.0 U	1.0 U	NA	1.0 U	NA	1.0 U
Pentachlorophenol	10 U	NA	NA	10 UJ	10 U	NA	10 U	NA	10 U
Phenanthrene	1.0 U	NA	NA	1.0 U	1.0 U	NA	1.0 U	NA	1.0 UJ
Anthracene	1.0 U	NA	NA	1.0 U	1.0 U	NA	1.0 U	NA	1.0 U
Di-n-Butylphthalate	1.0 U	NA	NA	1.0 U	1.0 U	NA	1.0 U	NA	1.0 UJ
Fluoranthene	1.0 U	NA	NA	1.0 U	1.0 U	NA	1.0 U	NA	1.0 U
Pyrene	1.0 U	NA	NA	1.0 U	1.0 U	NA	1.0 U	NA	1.0 U
Butylbenzylphthalate	**4.5**	NA	NA	1.0 U	1.0 U	NA	1.0 U	NA	1.0 UJ
Benzo(a)anthracene	1.0 U	NA	NA	1.0 U	1.0 U	NA	1.0 U	NA	1.0 U
bis(2-Ethylhexyl)phthalate	3.0 U	NA	NA	3.0 U	3.0 U	NA	3.0 U	NA	3.0 U
Chrysene	1.0 U	NA	NA	1.0 U	1.0 U	NA	1.0 U	NA	1.0 U
Di-n-Octyl phthalate	1.0 U	NA	NA	1.0 U	1.0 U	NA	1.0 U	NA	1.0 U
Benzo(a)pyrene	1.0 U	NA	NA	1.0 U	1.0 U	NA	1.0 U	NA	1.0 U
Indeno(1,2,3-cd)pyrene	1.0 U	NA	NA	1.0 U	1.0 U	NA	1.0 U	NA	1.0 UJ
Dibenz(a,h)anthracene	1.0 U	NA	NA	1.0 U	1.0 U	NA	1.0 U	NA	1.0 UJ
Benzo(g,h,i)perylene	1.0 U	NA	NA	1.0 UJ	1.0 U	NA	1.0 U	NA	1.0 UJ
1-Methylnaphthalene	1.0 U	NA	NA	1.0 U	1.0 U	NA	1.0 U	NA	1.0 U
Total Benzofluoranthenes	5.0 U	NA	NA	5.0 U	5.0 U	NA	5.0 U	NA	2.0 U

TABLE 3
MH130A WHOLE WATER SAMPLING ANALYTICAL RESULTS
LONG-TERM STORMWATER TREATMENT SYSTEM
NORTH BOEING FIELD - SEATTLE, WASHINGTON

Sample Location ID	LTST-W-MH130A	LTST-W-MH130A	LTST-W-MH130A	LTST-W-MH130A	LTST-W-MH130A	LTST-W-MH130A	LTST-W-MH130A	LTST-W-MH130A	LTST-W-MH130A
Laboratory Data ID	XN18C/XN18G/XN19C	XO61A/XO61C/XO79A	XQ44C/XQ44G/XQ45C	XT98C/XT98G/XT99C	XU37A/XU37C/XU42A	XZ68C/XZ68G/XZ69C	YB46A/YB46C/YB47A	YF79A/YF79C/YF80A	YR11C/YR11G/YR12C
Sample Date	11/7/2013	11/18/2013	12/5/2013	1/9/2014	1/10/2014	2/16/2014	3/5/2014	4/8/2014	7/10/2014
Event Type	Monthly	Storm	Monthly	Quarterly	Storm	Storm	Storm	Quarterly	Quarterly
Sample Type	Grab	Grab	Grab	Grab	Grab	Grab	Grab	Grab	Grab
PAHs (µg/L)									
Method SW8270D-SIM									
Naphthalene	**0.054**	NA	NA	0.010 U	0.010 U	NA	0.010 U	NA	0.010 U
2-Methylnaphthalene	0.010 U	NA	NA	0.010 U	0.010 U	NA	0.010 U	NA	0.010 U
1-Methylnaphthalene	**0.041** M	NA	NA	0.010 U	**0.037**	NA	**0.083**	NA	0.010 U
Acenaphthylene	0.010 U	NA	NA	0.010 U	0.010 U	NA	0.010 U	NA	0.010 U
Acenaphthene	0.010 U	NA	NA	0.010 U	0.010 U	NA	0.010 U	NA	**0.017**
Fluorene	0.010 U	NA	NA	0.010 U	0.010 U	NA	0.010 U	NA	0.010 U
Phenanthrene	**0.031**	NA	NA	0.010 U	0.010 U	NA	**0.015**	NA	0.010 U
Anthracene	0.010 U	NA	NA	0.010 U	0.010 U	NA	0.010 U	NA	0.010 U
Fluoranthene	**0.039**	NA	NA	0.010 U	0.010 U	NA	**0.017**	NA	0.010 U
Pyrene	**0.087**	NA	NA	**0.013** J	**0.010**	NA	**0.020**	NA	**0.011**
Benzo(a)anthracene	**0.021**	NA	NA	0.010 U	0.010 U	NA	0.010 U	NA	0.010 U
Chrysene	**0.050**	NA	NA	0.010 U	0.010 U	NA	**0.011**	NA	0.010 U
Benzo(a)pyrene	**0.030**	NA	NA	0.010 U	0.010 U	NA	0.010 U	NA	0.010 U
Indeno(1,2,3-cd)pyrene	**0.027**	NA	NA	0.010 U	0.010 U	NA	0.010 U	NA	0.010 U
Dibenz(a,h)anthracene	0.010 U	NA	NA	0.010 U	0.010 U	NA	0.010 U	NA	0.010 U
Benzo(g,h,i)perylene	**0.050**	NA	NA	0.010 U	0.010 U	NA	0.010 U	NA	0.010 U
Dibenzofuran	0.010 U	NA	NA	0.010 U	0.010 U	NA	0.010 U	NA	0.010 U
Total Benzofluoranthenes	**0.060**	NA	NA	0.020 UJ	0.020 U	NA	0.020 U	NA	0.020 U
CPAH TEQ	**0.041**	NA	NA	NA	NA	NA	**0.0001**	NA	NA
TOTAL METALS (µg/L)									
Method EPA200.8/6010B,C/7470A									
Arsenic	**0.7**	**0.6**	**0.9**	**0.5**	**0.6**	**0.8**	**0.7**	**1.4**	**2.2**
Cadmium	**0.9**	**0.6**	**0.4**	**0.8**	**0.9**	**0.4**	**0.5**	**0.2**	**0.1**
Chromium	**1.2**	**1.0**	1 U	**0.8**	0.5 U	**1.7**	**0.6**	0.5 U	1 U
Copper	**5.9**	**3.2**	**111**	**3.9**	**3.4**	**3.6**	**7.3**	**4.6**	**4.7**
Iron	**1200**	**610**	**4990**	**870**	**2990**	**2230**	**1220**	**7310**	**7590**
Lead	**1.7**	**1.0**	**6.4**	**0.9**	**0.4**	**0.6**	**0.8**	**0.1**	**0.3**
Manganese	**27**	**15**	**115**	**29**	**138**	**92**	**53**	**478**	**290**
Mercury	0.1 U	0.1 U	0.1 U	0.1 U	0.1 U	0.1 U	0.1 U	0.1 U	0.1 U
Nickel	**1.9**	**1.0**	**1.7**	**1.1**	**1.5**	**1.3**	**1.6**	**1.7**	**1.4**
Zinc	**106**	**74**	**146**	**136**	**136**	**91**	**122**	**16**	**17**
DISSOLVED METALS (µg/L)									
Method EPA200.8/6010B,C									
Arsenic	**0.4**	**0.3**	**0.2**	**0.3**	**0.2**	**0.5**	**0.4**	**0.6**	**0.6**
Cadmium	**0.5**	**0.3**	**0.2**	**0.6**	**0.6**	**0.3**	**0.4**	0.1 U	0.1 U
Chromium	**0.6**	**0.6**	0.5 U	0.5 U	0.5 U	0.5 U	0.5 U	0.5 U	1 U
Copper	**2.8**	**1.7**	**14.9**	**1.6**	**1.4**	**2.0**	**4.7**	**1.3** J	**1.9**
Iron	**80**	**50**	50 U	**240**	**130**	**820**	**340**	50 U	50 U
Lead	**0.2**	0.1 U	0.1 U	**0.2**	0.1 U	0.1 U	**0.1**	0.1 U	0.1 U
Manganese	**12**	**6**	**105**	**25**	**111**	**91**	**60**	**453**	**241**
Nickel	**1.3**	**0.7**	**1.8**	**1.2**	**1.5**	**0.9**	**1.4**	**1.7** J	**1.3**
Zinc	**75**	**54**	**80**	**144**	**120**	**75**	**92**	**11**	**7**
DISSOLVED METALS (ng/L)									
Method SW7470A									
Mercury	20.0 U	20.0 U	20.0 U	20.0 U	20.0 U	20.0 U	20.0 U	20.0 U	20.0 U

TABLE 3
MH130A WHOLE WATER SAMPLING ANALYTICAL RESULTS
LONG-TERM STORMWATER TREATMENT SYSTEM
NORTH BOEING FIELD - SEATTLE, WASHINGTON

Sample Location ID	LTST-W-MH130A	LTST-W-MH130A	LTST-W-MH130A	LTST-W-MH130A	LTST-W-MH130A	LTST-W-MH130A	LTST-W-MH130A	LTST-W-MH130A	LTST-W-MH130A
Laboratory Data ID	XN18C/XN18G/XN19C	XO61A/XO61C/XO79A	XQ44C/XQ44G/XQ45C	XT98C/XT98G/XT99C	XU37A/XU37C/XU42A	XZ68C/XZ68G/XZ69C	YB46A/YB46C/YB47A	YF79A/YF79C/YF80A	YR11C/YR11G/YR12C
Sample Date	11/7/2013	11/18/2013	12/5/2013	1/9/2014	1/10/2014	2/16/2014	3/5/2014	4/8/2014	7/10/2014
Event Type	Monthly	Storm	Monthly	Quarterly	Storm	Storm	Storm	Quarterly	Quarterly
Sample Type	Grab	Grab	Grab	Grab	Grab	Grab	Grab	Grab	Grab
CONVENTIONALS									
pH (SU; EPA 150.1)	**6.81**	**6.36**	**6.89**	**6.49**	NA	NA	NA	NA	NA
Total Suspended Solids (mg/L; SM2540D)	**10.3**	**4.4**	**14.6**	**3.2**	**14.3**	**18.1**	**17.1**	**26.8**	**32.1**
Turbidity (NTU; EPA 180.1)	**3.91**	**3.65**	**25.0**	**2.67**	**13.2**	**10.1**	**6.65**	**7.8**	**19.4**
PARTICLE/GRAIN SIZE (mg/L)									
Method ASTM-D3977C									
Sediment Conc. > 500 µm	**8.58**	**3.63**	**2.33**	**9.63**	**42.85**	NA	NA	NA	NA
Sediment Conc. 500 to 250 µm	**11.05**	**14.30**	**1.17**	**18.27**	**44.00**	NA	NA	NA	NA
Sediment Conc. 250 to 125 µm	0.01 U	0.01 U	0.01 U	0.01 U	0.01 U	NA	NA	NA	NA
Sediment Conc. 125 to 62.5 µm	0.01 U	0.01 U	0.01 U	0.01 U	0.01 U	NA	NA	NA	NA
Sediment Conc. 62.5 to 3.9 µm	**6.15**	0.01 U	**7.90**	0.01 U	**0.47**	NA	NA	NA	NA
Sediment Conc. 3.9 to 1 µm	**0.28**	**4.88**	**3.11**	**0.06**	0.01 U	NA	NA	NA	NA
Sediment Conc. < 1 µm	**2.22**	**7.86**	**1.73**	**2.88**	**0.14**	NA	NA	NA	NA
Previous 1 Hour Precip. (inches) (c)	0.03	0.08	0.00	0.00	0.01	0.04	0.04	0.00	0.00
Previous 12 Hours Precip. (inches) (c)	0.71	0.38	0.00	0.01	0.01	0.1	0.29	0.00	0.00

TABLE 3
MH130A WHOLE WATER SAMPLING ANALYTICAL RESULTS
LONG-TERM STORMWATER TREATMENT SYSTEM
NORTH BOEING FIELD - SEATTLE, WASHINGTON

Sample Location ID	LTST-W-MH130A	LTST-W-MH130A
Laboratory Data ID	ZE23C/ZE23G/ZE24C	ZF08C/ZF08G/ZF09C
Sample Date	10/9/2014	10/13/2014
Event Type	Quarterly	Storm
Sample Type	Grab	Grab
PCBs (µg/L) (a)		
Method SW8082A		
Aroclor 1016	0.005 U	0.005 U
Aroclor 1242	0.005 U	0.005 U
Aroclor 1248	0.08 U	0.18 U
Aroclor 1254	**0.098**	**0.14**
Aroclor 1260	0.005 U	**0.023**
Aroclor 1221	0.005 U	0.005 U
Aroclor 1232	0.005 U	0.005 U
Aroclor 1262	0.005 U	0.005 U
Total PCBs (b)	**0.098**	**0.163**
SEMIVOLATILES (µg/L)		
Method SW8270D		
Phenol	NA	NA
1,3-Dichlorobenzene	NA	NA
1,4-Dichlorobenzene	NA	NA
Benzyl Alcohol	NA	NA
1,2-Dichlorobenzene	NA	NA
2-Methylphenol	NA	NA
4-Methylphenol	NA	NA
Hexachloroethane	NA	NA
2,4-Dimethylphenol	NA	NA
Benzoic Acid	NA	NA
1,2,4-Trichlorobenzene	NA	NA
Naphthalene	NA	NA
Hexachlorobutadiene	NA	NA
2-Methylnaphthalene	NA	NA
Dimethylphthalate	NA	NA
Acenaphthylene	NA	NA
Acenaphthene	NA	NA
Dibenzofuran	NA	NA
Diethylphthalate	NA	NA
Fluorene	NA	NA
N-Nitrosodiphenylamine	NA	NA
Hexachlorobenzene	NA	NA
Pentachlorophenol	NA	NA
Phenanthrene	NA	NA
Anthracene	NA	NA
Di-n-Butylphthalate	NA	NA
Fluoranthene	NA	NA
Pyrene	NA	NA
Butylbenzylphthalate	NA	NA
Benzo(a)anthracene	NA	NA
bis(2-Ethylhexyl)phthalate	NA	NA
Chrysene	NA	NA
Di-n-Octyl phthalate	NA	NA
Benzo(a)pyrene	NA	NA
Indeno(1,2,3-cd)pyrene	NA	NA
Dibenz(a,h)anthracene	NA	NA
Benzo(g,h,i)perylene	NA	NA
1-Methylnaphthalene	NA	NA
Total Benzofluoranthenes	NA	NA

TABLE 3
MH130A WHOLE WATER SAMPLING ANALYTICAL RESULTS
LONG-TERM STORMWATER TREATMENT SYSTEM
NORTH BOEING FIELD - SEATTLE, WASHINGTON

Sample Location ID	LTST-W-MH130A	LTST-W-MH130A
Laboratory Data ID	ZE23C/ZE23G/ZE24C	ZF08C/ZF08G/ZF09C
Sample Date	10/9/2014	10/13/2014
Event Type	Quarterly	Storm
Sample Type	Grab	Grab
PAHs (µg/L)		
Method SW8270D-SIM		
Naphthalene	NA	NA
2-Methylnaphthalene	NA	NA
1-Methylnaphthalene	NA	NA
Acenaphthylene	NA	NA
Acenaphthene	NA	NA
Fluorene	NA	NA
Phenanthrene	NA	NA
Anthracene	NA	NA
Fluoranthene	NA	NA
Pyrene	NA	NA
Benzo(a)anthracene	NA	NA
Chrysene	NA	NA
Benzo(a)pyrene	NA	NA
Indeno(1,2,3-cd)pyrene	NA	NA
Dibenz(a,h)anthracene	NA	NA
Benzo(g,h,i)perylene	NA	NA
Dibenzofuran	NA	NA
Total Benzofluoranthenes	NA	NA
CPAH TEQ	NA	NA
TOTAL METALS (µg/L)		
Method EPA200.8/6010B,C/7470A		
Arsenic	**2.2**	**2.3**
Cadmium	**0.2**	**0.4**
Chromium	0.5 U	**1.4**
Copper	**1.8**	**10.7**
Iron	**9890**	**5950**
Lead	**0.6**	**3.3**
Manganese	**524**	**90**
Mercury	0.1 U	0.1 U
Nickel	**1.4**	**1.7**
Zinc	**26**	**73**
DISSOLVED METALS (µg/L)		
Method EPA200.8/6010B,C		
Arsenic	**0.6**	**0.7**
Cadmium	0.1 U	0.1 U
Chromium	0.5 U	0.5 U
Copper	**0.6**	**4.9**
Iron	50 U	**290**
Lead	0.1 U	**0.1**
Manganese	**493**	**67**
Nickel	**0.6**	**1.0**
Zinc	**11**	**33**
DISSOLVED METALS (ng/L)		
Method SW7470A		
Mercury	20.0 U	20.0 U

TABLE 3
MH130A WHOLE WATER SAMPLING ANALYTICAL RESULTS
LONG-TERM STORMWATER TREATMENT SYSTEM
NORTH BOEING FIELD - SEATTLE, WASHINGTON

Sample Location ID	LTST-W-MH130A	LTST-W-MH130A
Laboratory Data ID	ZE23C/ZE23G/ZE24C	ZF08C/ZF08G/ZF09C
Sample Date	10/9/2014	10/13/2014
Event Type	Quarterly	Storm
Sample Type	Grab	Grab
CONVENTIONALS		
pH (SU; EPA 150.1)	NA	NA
Total Suspended Solids (mg/L; SM2540D)	**32.7**	**34.3**
Turbidity (NTU; EPA 180.1)	**114**	**14.5**
PARTICLE/GRAIN SIZE (mg/L)		
Method ASTM-D3977C		
Sediment Conc. > 500 µm	NA	NA
Sediment Conc. 500 to 250 µm	NA	NA
Sediment Conc. 250 to 125 µm	NA	NA
Sediment Conc. 125 to 62.5 µm	NA	NA
Sediment Conc. 62.5 to 3.9 µm	NA	NA
Sediment Conc. 3.9 to 1 µm	NA	NA
Sediment Conc. < 1 µm	NA	NA
Previous 1 Hour Precip. (inches) (c)	0.00	0.00
Previous 12 Hours Precip. (inches) (c)	0.00	0.00

TEQ = Total Equivalency Quotient
cPAH = Carcinogenic Polycyclic Aromatic Hydrocarbon
PCB = Polychlorinated Biphenyl
SIM = Select Ion Monitoring
-- = Not applicable (grab sample does not require start/end date).
NA = Not Analyzed.
ND = Not Detected.
Bold = Detected compound.

EPA = U.S. Environmental Protection Agency
ASTM = American Society for Testing and Materials
ARI = Analytical Resources Inc.
NOAA = National Oceanic and Atmospheric Administration
µg/L = micrograms per liter
mg/L = milligrams per liter
µm = micrometer
ng/L = nanograms per liter

SU = Standard Units
NTU = Nephelometric Turbidity Units

U = Indicates the compound was not detected at the reported concentration.
J = Indicates the analyte was positively identified; the associated numerical value is the approximate concentration of the analyte in the sample.
J1 = Indicates the analyte was detected at a concentration less than the reporting limit but greater than the method detection limit.
M = Indicates an estimated value of analyte found and confirmed by analyst but with low spectral match.
Blue = Validation process not completed.

(a) Starting in December 2012, ARI evaluated PCBs in whole water between the Limit of Detection (LOD) and the Limit of Quantitation (LOQ). For these non-detect results, the reported concentration shown is the LOD (1/2 the LOQ).
(b) Total PCBs is the sum of detected aroclors or, if no aroclors are detected, is reported as non-detect (ND).
(c) Precipitation data is from the NOAA Quality Controlled Local Climatological Data for Station 24234/BFI - SEATTLE: BOEING FIELD/KING COUNTY INTERNATIONAL AIRPORT.
(d) Due to a laboratory receipt login error, total metals were analyzed by low level (ng/L); the client was notified and results were reported per client request.

TABLE 4
LSIV WHOLE WATER SAMPLING ANALYTICAL RESULTS
LONG-TERM STORMWATER TREATMENT SYSTEM
NORTH BOEING FIELD - SEATTLE, WASHINGTON

Sample Location ID	LTST-W-LSIV	LTST-W-LSIV	LTST-W-LSIV	LTST-W-LSIV	LTST-W-LSIV	LTST-W-LSIV	LTST-W-LSIV	LTST-W-LSIV
Laboratory Data ID	XN18B/XN18F/XN19B	XO76B/XO76D/XO77B	XQ44B/XQ44F/XQ45B	XT98B/XT98F/XT99B	XU48B/XU48D/XU49B	XZ68B/XZ68F/XZ69B	YB86B/YB86D/YB88B	YG17B/YG17D/YG18B
Sample Start Date	11/4/2013	11/18/2013	--	1/6/2014	1/10/2014	2/16/2014	3/5/2014	4/7/2014
Sample End Date or Grab Date	11/7/2013	11/18/2013	12/5/2013	1/8/2014	1/11/2014	2/16/2014	3/6/2014	4/8/2014
Event Type	Monthly	Storm	Monthly	Quarterly	Storm	Storm	Storm	Quarterly
Sample Type	Flow-weighted composite, bypass only		Grab, non-bypass flow	Flow-weighted composite, bypass only				
PCBs (µg/L) (a)								
Method SW8082A								
Aroclor 1016	0.005 U	0.005 U	0.005 U	0.005 U	0.005 U	0.005 U	0.005 U	0.005 U
Aroclor 1242	0.005 U	0.005 U	0.005 U	0.005 U	0.005 U	0.005 U	0.005 U	0.005 U
Aroclor 1248	0.005 U	0.005 U	0.005 U	0.005 U	0.005 U	0.005 U	0.005 U	0.005 U
Aroclor 1254	**0.015**	**0.011**	0.005 U	**0.021**	**0.018**	**0.021**	0.005 U	**0.017**
Aroclor 1260	0.005 U	**0.0050** J1	0.005 U	**0.015** J	**0.013**	**0.0090** J	0.005 U	0.005 U
Aroclor 1221	0.005 U	0.005 U	0.005 U	0.005 U	0.005 U	0.005 U	0.005 U	0.005 U
Aroclor 1232	0.005 U	0.013 U	0.005 U	0.013 U	0.005 U	0.005 U	0.005 U	0.005 U
Aroclor 1262	0.005 U	0.005 U	0.005 U	0.005 U	0.005 U	0.005 U	0.005 U	0.005 U
Total PCBs (b)	**0.015**	**0.016**	ND	**0.036**	**0.031**	**0.030**	ND	**0.017**
SEMIVOLATILES (µg/L)								
Method SW8270D								
Phenol	1.0 U	1.0 U	1.0 U	1.0 U	1.0 U	1.0 U	1.0 U	1.0 U
1,3-Dichlorobenzene	1.0 U	1.0 U	1.0 U	1.0 U	1.0 U	1.0 U	1.0 U	1.0 U
1,4-Dichlorobenzene	1.0 U	1.0 U	1.0 U	1.0 U	1.0 U	1.0 U	1.0 U	1.0 U
Benzyl Alcohol	2.0 U	2.0 U	2.0 UJ	2.0 U	2.0 U	2.0 U	2.0 U	2.0 U
1,2-Dichlorobenzene	1.0 U	1.0 U	1.0 U	1.0 U	1.0 U	1.0 U	1.0 U	1.0 U
2-Methylphenol	1.0 U	1.0 U	1.0 U	1.0 U	1.0 U	1.0 U	1.0 U	1.0 U
4-Methylphenol	2.0 U	2.0 U	2.0 U	2.0 U	2.0 U	2.0 U	2.0 U	2.0 U
Hexachloroethane	2.0 U	2.0 U	2.0 U	2.0 U	2.0 U	2.0 U	2.0 U	2.0 U
2,4-Dimethylphenol	3.0 U	3.0 U	3.0 U	3.0 U	3.0 U	3.0 U	3.0 U	3.0 U
Benzoic Acid	20 U	20 U	20 UJ	20 UJ	20 UJ	20 U	20 U	20 U
1,2,4-Trichlorobenzene	1.0 U	1.0 U	1.0 U	1.0 U	1.0 U	1.0 U	1.0 U	1.0 U
Naphthalene	1.0 U	1.0 U	1.0 U	1.0 U	1.0 U	1.0 U	1.0 U	1.0 U
Hexachlorobutadiene	3.0 U	3.0 U	3.0 U	3.0 U	3.0 U	3.0 U	3.0 U	3.0 U
2-Methylnaphthalene	1.0 U	1.0 U	1.0 U	1.0 U	1.0 U	1.0 U	1.0 U	1.0 U
Dimethylphthalate	1.0 U	1.0 U	1.0 U	1.0 U	1.0 U	1.0 U	1.0 U	1.0 U
Acenaphthylene	1.0 U	1.0 U	1.0 U	1.0 U	1.0 U	1.0 U	1.0 U	1.0 U
Acenaphthene	1.0 U	1.0 U	1.0 U	1.0 U	1.0 U	1.0 U	1.0 U	1.0 U
Dibenzofuran	1.0 U	1.0 U	1.0 U	1.0 U	1.0 U	1.0 U	1.0 U	1.0 U
Diethylphthalate	1.0 U	1.0 U	1.0 U	1.0 U	1.0 U	1.0 U	1.0 U	1.0 U
Fluorene	1.0 U	1.0 U	1.0 U	1.0 U	1.0 U	1.0 U	1.0 U	1.0 U
N-Nitrosodiphenylamine	1.0 U	1.0 U	1.0 U	1.0 U	1.0 U	1.0 U	1.0 U	1.0 U
Hexachlorobenzene	1.0 U	1.0 U	1.0 U	1.0 U	1.0 U	1.0 U	1.0 U	1.0 U
Pentachlorophenol	10 U	10 U	10 UJ	10 UJ	10 U	10 U	10 U	10 U
Phenanthrene	1.0 U	1.0 U	1.0 U	1.0 U	1.0 U	1.0 U	1.0 U	1.0 U
Anthracene	1.0 U	1.0 U	1.0 U	1.0 U	1.0 U	1.0 U	1.0 U	1.0 U
Di-n-Butylphthalate	1.0 U	1.0 U	1.0 U	1.0 U	1.0 U	1.0 U	1.0 U	1.0 U
Fluoranthene	1.0 U	1.0 U	1.0 U	1.0 U	1.0 U	1.0 U	1.0 U	1.0 U
Pyrene	1.0 U	1.0 U	1.0 U	1.0 U	1.0 U	1.0 U	1.0 U	1.0 U
Butylbenzylphthalate	1.0 U	**2.1**	1.0 U	1.0 U	1.0 U	**1.5**	1.0 U	1.0 U
Benzo(a)anthracene	1.0 U	1.0 U	1.0 U	1.0 U	1.0 U	1.0 U	1.0 U	1.0 U
bis(2-Ethylhexyl)phthalate	3.0 U	3.0 U	3.0 U	3.0 U	3.0 U	3.0 U	3.0 U	3.0 U
Chrysene	1.0 U	1.0 U	1.0 U	1.0 U	1.0 U	1.0 U	1.0 U	1.0 U
Di-n-Octyl phthalate	**1.3**	1.0 U	1.0 U	**1.1**	**2.2**	1.0 U	1.0 U	1.0 U
Benzo(a)pyrene	1.0 U	1.0 U	1.0 U	1.0 U	1.0 U	1.0 U	1.0 U	1.0 U
Indeno(1,2,3-cd)pyrene	1.0 U	1.0 U	1.0 U	1.0 U	1.0 U	1.0 U	1.0 U	1.0 U
Dibenz(a,h)anthracene	1.0 U	1.0 U	1.0 U	1.0 U	1.0 U	1.0 U	1.0 U	1.0 U
Benzo(g,h,i)perylene	1.0 U	1.0 U	1.0 U	1.0 UJ	1.0 U	1.0 U	1.0 U	1.0 U
1-Methylnaphthalene	1.0 U	1.0 U	1.0 U	1.0 U	1.0 U	1.0 U	1.0 U	1.0 U
Total Benzofluoranthenes	5.0 U	5.0 U	5.0 U	5.0 U	5.0 U	5.0 U	5.0 U	2.0 U

TABLE 4
LSIV WHOLE WATER SAMPLING ANALYTICAL RESULTS
LONG-TERM STORMWATER TREATMENT SYSTEM
NORTH BOEING FIELD - SEATTLE, WASHINGTON

Sample Location ID	LTST-W-LSIV	LTST-W-LSIV	LTST-W-LSIV	LTST-W-LSIV	LTST-W-LSIV	LTST-W-LSIV	LTST-W-LSIV	LTST-W-LSIV
Laboratory Data ID	XN18B/XN18F/XN19B	XO76B/XO76D/XO77B	XQ44B/XQ44F/XQ45B	XT98B/XT98F/XT99B	XU48B/XU48D/XU49B	XZ68B/XZ68F/XZ69B	YB86B/YB86D/YB88B	YG17B/YG17D/YG18B
Sample Start Date	11/4/2013	11/18/2013	--	1/6/2014	1/10/2014	2/16/2014	3/5/2014	4/7/2014
Sample End Date or Grab Date	11/7/2013	11/18/2013	12/5/2013	1/8/2014	1/11/2014	2/16/2014	3/6/2014	4/8/2014
Event Type	Monthly	Storm	Monthly	Quarterly	Storm	Storm	Storm	Quarterly
Sample Type	Flow-weighted composite, bypass only		Grab, non-bypass flow	Flow-weighted composite, bypass only				
PAHs (µg/L)								
Method SW8270D-SIM								
Naphthalene	0.010 U	**0.014**	0.010 U	**0.018**	**0.018**	**0.037**	**0.014**	0.010 U
2-Methylnaphthalene	**0.0052** J	**0.017**	0.010 U	**0.027**	**0.025**	**0.027**	**0.014**	0.010 U
1-Methylnaphthalene	**0.0061** J	**0.016**	0.010 U	**0.032**	**0.027**	**0.028**	**0.012**	0.010 U
Acenaphthylene	0.010 U	0.010 U	0.010 U	**0.010**	0.010 U	0.010 U	0.010 U	0.010 U
Acenaphthene	**0.0063** J	**0.014**	**0.068**	0.010 U	**0.011**	**0.014**	0.010 U	0.010 U
Fluorene	**0.0075** J	**0.015**	0.010 U	**0.012**	**0.014**	**0.017**	0.010 U	0.010 U
Phenanthrene	**0.089**	**0.12**	0.010 U	**0.15**	**0.15**	**0.19**	0.034 U	**0.071**
Anthracene	**0.013**	**0.018**	0.010 U	**0.018**	**0.018**	**0.022**	0.010 U	0.010 U
Fluoranthene	**0.18**	**0.19**	0.010 U	**0.41**	**0.40**	**0.52**	**0.10**	**0.19**
Pyrene	**0.25**	**0.22**	0.010 U	**0.32** J	**0.39**	**0.42**	**0.076**	**0.19**
Benzo(a)anthracene	**0.082**	**0.081**	0.010 U	**0.10**	**0.11**	**0.16**	**0.021**	**0.054**
Chrysene	**0.17**	**0.16**	0.010 U	**0.31**	**0.34**	**0.36**	**0.068**	**0.17**
Benzo(a)pyrene	**0.11**	**0.11**	0.010 U	**0.17**	**0.20**	**0.24**	**0.036**	**0.1**
Indeno(1,2,3-cd)pyrene	**0.12**	**0.12**	0.010 U	**0.20**	**0.27**	**0.26**	**0.042**	**0.1**
Dibenz(a,h)anthracene	**0.022**	**0.025**	0.010 U	**0.040**	**0.063**	**0.061** J	0.010 U	**0.018**
Benzo(g,h,i)perylene	**0.15**	**0.15**	0.010 U	**0.27**	**0.36** J	**0.27**	**0.046**	**0.13**
Dibenzofuran	0.010 U	**0.013**	0.010 U	**0.011**	**0.012**	**0.011**	0.010 U	0.010 U
Total Benzofluoranthenes	**0.28**	**0.25**	0.020 U	**0.51** J	**0.57**	**0.65**	**0.12**	**0.33**
CPAH TEQ	**0.162**	**0.159**	ND	**0.258**	**0.305**	**0.357**	**0.055**	**0.15**
TOTAL METALS (µg/L)								
Method EPA200.8/6010B,C/7470A								
Arsenic	**1.0**	**1.1**	**1.0**	**1.7**	**0.7**	**2.2**	**0.6**	**2.8**
Cadmium	**0.3**	**0.3**	0.1 U	**0.5**	**0.4**	**0.4**	**0.2**	**0.8**
Chromium	**1.5**	**1.6**	1 U	**4.2**	**1.6**	**3.4**	**1.0**	**3.5**
Copper	**5.6**	**5.7**	**10.7**	**12.1**	**8.8**	**10.5**	**4.1**	**16.6**
Iron	**9160**	**13,000**	**9050**	**14,500**	**7510**	**6650**	**2550**	**29,500**
Lead	**3.2**	**2.9**	**0.1**	**7.6**	**6.2**	**6.4**	**1.4**	**5.0**
Manganese	**124**	**114**	**972**	**187**	**130**	**84**	**105**	**278**
Mercury	0.1 U	0.1 U	0.1 U	0.1 U	0.1 U	0.1 U	0.1 U	0.1 U
Nickel	**1.0**	**1.5**	**0.9**	**3.2**	**2.7**	**2.3**	**0.9**	**2.2**
Zinc	**48**	**48**	**7**	**91**	**67**	**61**	**34**	**83**
DISSOLVED METALS (µg/L)								
Method EPA200.8/SW6010B,C								
Arsenic	**0.2**	**0.2**	**0.5**	0.2 U	**0.2**	0.2 U	**0.4**	**0.4**
Cadmium	0.1 U	0.1 U	0.1 U	0.1 U	0.1 U	0.1 U	**0.1**	0.1 U
Chromium	0.5 U	0.5 U	0.5 U	0.5 U	0.5 U	0.5 U	**0.5**	0.5 U
Copper	**1.3**	**1.4**	**0.6**	**2.3**	**2.6**	**1.3**	**2.4**	**4.1**
Iron	**330**	**190**	**780**	**120**	**400**	**180**	**830**	**550**
Lead	**0.1**	**0.1**	0.1 U	**0.1**	**0.2**	**0.1**	**0.2**	**0.1**
Manganese	**67**	**46**	**891**	**34**	**70**	**29**	**99**	**76**
Nickel	0.5 U	**0.6**	0.5 U	**0.9**	**1.6**	**0.6**	**0.8**	**0.6**
Zinc	**13**	**11**	4 U	**13**	**26**	**20**	**26**	**8**
DISSOLVED METALS (ng/L)								
Method SW7470A								
Mercury	20.0 U	20.0 U	20.0 U	20.0 U	20.0 U	20.0 U	20.0 U	20.0 U

TABLE 4
LSIV WHOLE WATER SAMPLING ANALYTICAL RESULTS
LONG-TERM STORMWATER TREATMENT SYSTEM
NORTH BOEING FIELD - SEATTLE, WASHINGTON

Sample Location ID	LTST-W-LSIV	LTST-W-LSIV	LTST-W-LSIV	LTST-W-LSIV	LTST-W-LSIV	LTST-W-LSIV	LTST-W-LSIV	LTST-W-LSIV
Laboratory Data ID	XN18B/XN18F/XN19B	XO76B/XO76D/XO77B	XQ44B/XQ44F/XQ45B	XT98B/XT98F/XT99B	XU48B/XU48D/XU49B	XZ68B/XZ68F/XZ69B	YB86B/YB86D/YB88B	YG17B/YG17D/YG18B
Sample Start Date	11/4/2013	11/18/2013	--	1/6/2014	1/10/2014	2/16/2014	3/5/2014	4/7/2014
Sample End Date or Grab Date	11/7/2013	11/18/2013	12/5/2013	1/8/2014	1/11/2014	2/16/2014	3/6/2014	4/8/2014
Event Type	Monthly	Storm	Monthly	Quarterly	Storm	Storm	Storm	Quarterly
Sample Type	Flow-weighted composite, bypass only		Grab, non-bypass flow	Flow-weighted composite, bypass only				
CONVENTIONALS								
pH (SU; EPA 150.1)	**7.00**	**6.48**	**6.94**	**6.83**	NA	NA	NA	NA
Total Suspended Solids (mg/L; SM2540D)	**44.6**	**80.8**	**13.1**	**94.0**	**69.2**	**115**	**14.9**	**115**
Turbidity (NTU; EPA 180.1)	**17.5**	**26.3**	**53.0**	**13.4**	**13.2**	**3.87**	**6.48**	**86.7**
PARTICLE/GRAIN SIZE (mg/L)								
Method ASTM-D3977C								
Sediment Conc. > 500 µm	**5.06**	**15.31**	**3.21**	**33.68**	**5.73**	NA	NA	NA
Sediment Conc. 500 to 250 µm	**10.87**	**46.62**	**1.44**	**42.32**	**19.36**	NA	NA	NA
Sediment Conc. 250 to 125 µm	0.01 U	0.01 U	0.01 U	0.01 U	0.01 U	NA	NA	NA
Sediment Conc. 125 to 62.5 µm	**0.01**	0.01 U	0.01 U	**0.55**	**0.08**	NA	NA	NA
Sediment Conc. 62.5 to 3.9 µm	**4.07**	**48.78**	**6.01**	**62.61**	**45.31**	NA	NA	NA
Sediment Conc. 3.9 to 1 µm	**0.52**	**12.36**	**3.05**	**6.70**	**5.25**	NA	NA	NA
Sediment Conc. < 1 µm	**0.28**	**3.24**	**2.75**	**2.26**	**2.41**	NA	NA	NA
PRECIPITATION (c)								
Amount During Test (inches)	0.61	0.61	0.12	0.78	1.06	0.88	0.55	0.38

TABLE 4
LSIV WHOLE WATER SAMPLING ANALYTICAL RESULTS
LONG-TERM STORMWATER TREATMENT SYSTEM
NORTH BOEING FIELD - SEATTLE, WASHINGTON

Sample Location ID	LTST-W-LSIV	LTST-W-LSIV	LTST-W-LSIV
Laboratory Data ID	YR11B/YR11F/YR12B	ZE23B/ZE23F/ZE24B	ZF08B/ZF08F/ZF09B
Sample Start Date	--	--	10/13/2014
Sample End Date or Grab Date	7/10/14	10/9/14	10/14/14
Event Type	Quarterly	Quarterly	Storm
Sample Type	Grab, non-bypass flow		Flow-weighted composite, bypass only
PCBs (µg/L) (a)			
Method SW8082A			
Aroclor 1016	0.005 U	0.005 U	0.005 U
Aroclor 1242	0.005 U	0.005 U	0.005 U
Aroclor 1248	0.005 U	0.005 U	0.005 U
Aroclor 1254	0.005 U	0.005 U	**0.019**
Aroclor 1260	0.005 U	0.005 U	**0.013**
Aroclor 1221	0.005 U	0.005 U	0.005 U
Aroclor 1232	0.005 U	0.038 U	0.005 U
Aroclor 1262	0.005 U	0.005 U	0.005 U
Total PCBs (b)	ND	ND	**0.032**
SEMIVOLATILES (µg/L)			
Method SW8270D			
Phenol	1.0 U	10 U	1.0 U
1,3-Dichlorobenzene	1.0 U	10 U	1.0 U
1,4-Dichlorobenzene	1.0 U	10 U	1.0 U
Benzyl Alcohol	2.0 U	20 U	2.0 UJ
1,2-Dichlorobenzene	1.0 U	10 U	1.0 U
2-Methylphenol	1.0 UJ	10 U	1.0 U
4-Methylphenol	2.0 UJ	20 U	2.0 U
Hexachloroethane	2.0 UJ	20 U	2.0 U
2,4-Dimethylphenol	3.0 U	30 U	3.0 U
Benzoic Acid	20 UJ	200 UJ	20 U
1,2,4-Trichlorobenzene	1.0 U	10 U	1.0 U
Naphthalene	1.0 UJ	10 U	1.0 U
Hexachlorobutadiene	3.0 U	30 U	3.0 U
2-Methylnaphthalene	1.0 U	10 U	1.0 U
Dimethylphthalate	1.0 UJ	10 U	1.0 U
Acenaphthylene	1.0 U	10 U	1.0 U
Acenaphthene	1.0 UJ	10 U	1.0 U
Dibenzofuran	1.0 U	10 U	1.0 U
Diethylphthalate	1.0 UJ	10 U	1.0 U
Fluorene	1.0 UJ	10 U	1.0 U
N-Nitrosodiphenylamine	1.0 U	10 U	1.0 U
Hexachlorobenzene	1.0 U	10 U	1.0 U
Pentachlorophenol	10 U	100 UJ	10 UJ
Phenanthrene	1.0 UJ	10 U	1.0 U
Anthracene	1.0 U	10 U	1.0 U
Di-n-Butylphthalate	1.0 UJ	10 U	1.0 U
Fluoranthene	1.0 U	10 U	1.0 U
Pyrene	1.0 U	10 U	1.0 U
Butylbenzylphthalate	1.0 UJ	10 U	1.0 U
Benzo(a)anthracene	1.0 U	10 U	1.0 U
bis(2-Ethylhexyl)phthalate	3.0 U	30 U	3.0 U
Chrysene	1.0 U	10 U	1.0 U
Di-n-Octyl phthalate	1.0 U	10 U	1.0 U
Benzo(a)pyrene	1.0 U	10 U	1.0 U
Indeno(1,2,3-cd)pyrene	1.0 UJ	10 U	1.0 U
Dibenz(a,h)anthracene	1.0 UJ	10 U	1.0 U
Benzo(g,h,i)perylene	1.0 UJ	10 U	1.0 U
1-Methylnaphthalene	1.0 U	10 U	1.0 U
Total Benzofluoranthenes	2.0 U	20 U	2.0 U

TABLE 4
LSIV WHOLE WATER SAMPLING ANALYTICAL RESULTS
LONG-TERM STORMWATER TREATMENT SYSTEM
NORTH BOEING FIELD - SEATTLE, WASHINGTON

Sample Location ID	LTST-W-LSIV	LTST-W-LSIV	LTST-W-LSIV
Laboratory Data ID	YR11B/YR11F/YR12B	ZE23B/ZE23F/ZE24B	ZF08B/ZF08F/ZF09B
Sample Start Date	--	--	10/13/2014
Sample End Date or Grab Date	7/10/14	10/9/14	10/14/14
Event Type	Quarterly	Quarterly	Storm
Sample Type	Grab, non-bypass flow		Flow-weighted composite, bypass only
PAHs (µg/L)			
Method SW8270D-SIM			
Naphthalene	0.010 U	**0.011**	**0.013**
2-Methylnaphthalene	0.010 U	0.010 U	**0.014**
1-Methylnaphthalene	0.010 U	0.010 U	**0.012**
Acenaphthylene	0.010 U	0.010 U	0.010 U
Acenaphthene	**0.032**	**0.11**	0.010 U
Fluorene	0.010 U	0.010 U	0.010 U
Phenanthrene	0.010 U	**0.021**	**0.13**
Anthracene	0.010 U	0.010 U	**0.010**
Fluoranthene	0.010 U	0.010 U	**0.33**
Pyrene	0.010 U	0.010 U	**0.27**
Benzo(a)anthracene	0.010 U	0.010 U	**0.071**
Chrysene	0.010 U	0.010 U	**0.25**
Benzo(a)pyrene	0.010 U	0.010 U	**0.13**
Indeno(1,2,3-cd)pyrene	0.010 U	0.010 U	**0.17**
Dibenz(a,h)anthracene	0.010 U	0.010 UJ	**0.028**
Benzo(g,h,i)perylene	0.010 U	0.010 U	**0.22**
Dibenzofuran	0.010 U	0.010 U	**0.011**
Total Benzofluoranthenes	0.020 U	0.020 U	**0.46**
CPAH TEQ	ND	ND	**0.205**
TOTAL METALS (µg/L)			
Method EPA200.8/6010B,C/7470A			
Arsenic	**0.7**	**1.1**	**2.6**
Cadmium	0.1 U	0.1 U	**0.6**
Chromium	**1**	**2.2**	**4.0**
Copper	**2.7**	**1.8**	**12.5**
Iron	**4340**	**7030**	**22800**
Lead	**0.1**	**0.2**	**8.4**
Manganese	**377**	**671**	**263**
Mercury	0.1 U	0.1 U	0.1 U
Nickel	**1.3**	**9.4**	**2.3**
Zinc	4 U	**6**	**85**
DISSOLVED METALS (µg/L)			
Method EPA200.8/SW6010B,C			
Arsenic	**0.6**	**0.6**	**0.3**
Cadmium	0.1 U	0.1 U	0.1 U
Chromium	**3**	**1.7**	0.5 U
Copper	**2.3**	0.5 U	**1.5**
Iron	**5230**	**70**	**220**
Lead	**0.1**	0.1 U	0.1 U
Manganese	**535**	**516**	**48**
Nickel	**1.1**	**7.8**	0.5 U
Zinc	4 U	4 U	**5**
DISSOLVED METALS (ng/L)			
Method SW7470A			
Mercury	20.0 U	20.0 U	20.0 U

TABLE 4
LSIV WHOLE WATER SAMPLING ANALYTICAL RESULTS
LONG-TERM STORMWATER TREATMENT SYSTEM
NORTH BOEING FIELD - SEATTLE, WASHINGTON

Sample Location ID	LTST-W-LSIV	LTST-W-LSIV	LTST-W-LSIV
Laboratory Data ID	YR11B/YR11F/YR12B	ZE23B/ZE23F/ZE24B	ZF08B/ZF08F/ZF09B
Sample Start Date	--	--	10/13/2014
Sample End Date or Grab Date	7/10/14	10/9/14	10/14/14
Event Type	Quarterly	Quarterly	Storm
Sample Type	Grab, non-bypass flow		Flow-weighted composite, bypass only
CONVENTIONALS			
pH (SU; EPA 150.1)	NA	NA	NA
Total Suspended Solids (mg/L; SM2540D)	**3.2**	**32.7**	**145**
Turbidity (NTU; EPA 180.1)	**13.5**	**50.4**	**37.2**
PARTICLE/GRAIN SIZE (mg/L)			
Method ASTM-D3977C			
Sediment Conc. > 500 µm	NA	NA	NA
Sediment Conc. 500 to 250 µm	NA	NA	NA
Sediment Conc. 250 to 125 µm	NA	NA	NA
Sediment Conc. 125 to 62.5 µm	NA	NA	NA
Sediment Conc. 62.5 to 3.9 µm	NA	NA	NA
Sediment Conc. 3.9 to 1 µm	NA	NA	NA
Sediment Conc. < 1 µm	NA	NA	NA
PRECIPITATION (c)			
Amount During Test (inches)	0.00	0.00	0.55

TEQ = Total Equivalency Quotient
cPAH = Carcinogenic Polycyclic Aromatic Hydrocarbon
PCB = Polychlorinated Biphenyl
SIM = Select Ion Monitoring
-- = Not applicable (grab sample does not require start/end date).
NA = Not Analyzed.
ND = Not Detected.
Bold = Detected compound.

EPA = U.S. Environmental Protection Agency
ASTM = American Society for Testing and Materials
ARI = Analytical Resources Inc.
NOAA = National Oceanic and Atmospheric Administration
µg/L = micrograms per liter
mg/L = milligrams per liter
µm = micrometer
ng/L = nanograms per liter

SU = Standard Units
NTU = Nephelometric Turbidity Units

U = Indicates the compound was not detected at the reported concentration.
J1 = Indicates the analyte was detected at a concentration less than the reporting limit but greater than the method detection limit.
Blue = Validation process not completed.

(a) Starting in December 2012, ARI evaluated PCBs in whole water between the Limit of Detection (LOD) and the Limit of Quantitation (LOQ). For these non-detect results, the reported concentration shown is the LOD (1/2 the LOQ).
(b) Total PCBs is the sum of detected aroclors or, if no aroclors are detected, is reported as non-detect (ND).
(c) Precipitation data is from the NOAA Quality Controlled Local Climatological Data for Station 24234/BFI - SEATTLE: BOEING FIELD/KING COUNTY INTERNATIONAL AIRPORT.

TABLE 5
EFFLUENT WHOLE WATER SAMPLING ANALYTICAL RESULTS
LONG-TERM STORMWATER TREATMENT SYSTEM
NORTH BOEING FIELD - SEATTLE, WASHINGTON

Sample Location ID	LTST-W-EFF	LTST-W-EFF	LTST-W-EFF	LTST-W-EFF	LTST-W-EFF	LTST-W-EFF	LTST-W-EFF	LTST-W-EFF	LTST-W-EFF
Laboratory Data ID	XN18D/XN18H/XN19D	XO61B/XO61D/XO79B	XQ44D/XQ44H/XQ45D	XT98D/XT98H/XT99D	XU37B/XU37D/XU42B	XZ09A	XZ68D	YB09A	YB46B
Sample Date	11/7/2013	11/18/2013	12/5/2013	1/9/2014	1/10/2014	2/12/2014	2/16/2014	3/3/2014	3/5/2014
Event Type	Monthly	Storm	Monthly	Monthly	Storm	Monthly	Storm	Monthly	Storm
Sample Type	Grab	Grab	Grab	Grab	Grab	Grab	Grab	Grab	Grab
PCBs (µg/L) (a)									
Method SW8082A									
Aroclor 1016	0.005 U	0.005 U	0.005 U	0.005 U	0.005 U	0.005 U	0.005 U	0.005 U	0.005 U
Aroclor 1242	0.005 U	0.005 U	0.005 U	0.005 U	0.005 U	0.005 U	0.005 U	0.005 U	0.005 U
Aroclor 1248	0.005 U	0.005 U	0.005 U	0.005 U	0.005 U	0.005 U	0.005 U	0.005 U	0.005 U
Aroclor 1254	0.005 U	0.005 U	0.005 U	0.005 U	0.005 U	0.005 U	0.005 U	0.005 U	0.005 U
Aroclor 1260	0.005 U	0.005 U	0.005 U	0.005 U	0.005 U	0.005 U	0.005 U	0.005 U	0.005 U
Aroclor 1221	0.005 U	0.005 U	0.005 U	0.005 U	0.005 U	0.005 U	0.005 U	0.005 U	0.005 U
Aroclor 1232	0.005 U	0.013 U	0.005 U	0.013 U	0.005 U	0.005 U	0.008 U	0.005 U	0.005 U
Aroclor 1262	0.005 U	0.005 U	0.005 U	0.005 U	0.005 U	0.005 U	0.010 U	0.010 U	0.010 U
Total PCBs (b)	ND	ND	ND	ND	ND	ND	ND	ND	ND
TOTAL METALS (µg/L)									
Method EPA200.8/6010B,C/7470A									
Arsenic	0.2 U	**0.2**	**0.4**	**0.4**	**0.5**	NA	NA	NA	NA
Cadmium	0.1 U	0.1 U	0.1 U	0.1 U	**0.1**	NA	NA	NA	NA
Chromium	**0.6**	0.5 U	0.5 U	0.5 U	0.5 U	NA	NA	NA	NA
Copper	**1.8**	**1.3**	**0.7**	**0.6**	0.5 U	NA	NA	NA	NA
Iron	**130**	**190**	**610**	**690**	**580**	NA	NA	NA	NA
Lead	**0.2**	**0.2**	0.1 U	**0.2**	0.1 U	NA	NA	NA	NA
Manganese	**42**	**57**	**778**	**627**	**726**	NA	NA	NA	NA
Mercury	0.1 U	0.1 U	0.1 U	0.1 U	0.1 U	NA	NA	NA	NA
Nickel	0.5 U	0.5 U	0.5 U	**1.2**	**0.8**	NA	NA	NA	NA
Zinc	**5**	**6**	**9**	**25**	**18**	NA	NA	NA	NA
DISSOLVED METALS (µg/L)									
Method EPA200.8/6010B,C									
Arsenic	0.2 U	0.2 U	**0.4**	**0.4**	**0.4**	NA	NA	NA	NA
Cadmium	0.1 U	0.1 U	0.1 U	0.1 U	0.1 U	NA	NA	NA	NA
Chromium	0.5 U	0.5 U	0.5 U	0.5 U	0.5 U	NA	NA	NA	NA
Copper	**1.1**	**0.8**	**0.6**	0.5 U	0.5 U	NA	NA	NA	NA
Iron	50 U	50 U	50 U	**240**	**160**	NA	NA	NA	NA
Lead	0.1 U	0.1 U	0.1 U	0.1 U	0.1 U	NA	NA	NA	NA
Manganese	**52**	**57**	**725**	**608**	**693**	NA	NA	NA	NA
Nickel	0.5 U	0.5 U	**0.6**	**0.8**	**0.7**	NA	NA	NA	NA
Zinc	**8**	**5**	**9**	**26**	**16**	NA	NA	NA	NA

TABLE 5
EFFLUENT WHOLE WATER SAMPLING ANALYTICAL RESULTS
LONG-TERM STORMWATER TREATMENT SYSTEM
NORTH BOEING FIELD - SEATTLE, WASHINGTON

Sample Location ID	LTST-W-EFF	LTST-W-EFF	LTST-W-EFF	LTST-W-EFF	LTST-W-EFF	LTST-W-EFF	LTST-W-EFF	LTST-W-EFF	LTST-W-EFF
Laboratory Data ID	XN18D/XN18H/XN19D	XO61B/XO61D/XO79B	XQ44D/XQ44H/XQ45D	XT98D/XT98H/XT99D	XU37B/XU37D/XU42B	XZ09A	XZ68D	YB09A	YB46B
Sample Date	11/7/2013	11/18/2013	12/5/2013	1/9/2014	1/10/2014	2/12/2014	2/16/2014	3/3/2014	3/5/2014
Event Type	Monthly	Storm	Monthly	Monthly	Storm	Monthly	Storm	Monthly	Storm
Sample Type	Grab	Grab	Grab	Grab	Grab	Grab	Grab	Grab	Grab
DISSOLVED METALS (ng/L)									
Method SW7470A									
Mercury	20.0 U	20.0 U	20.0 U	20.0 U	20.0 U	NA	NA	NA	NA
CONVENTIONALS									
pH (SU; EPA 150.1)	**6.66**	**6.80**	**7.05**	**6.88**	NA	NA	NA	NA	NA
Total Suspended Solids (mg/L; SM2540D)	**1.1**	**2.6**	**9.5**	1.0 U	**2.0**	NA	NA	NA	NA
PARTICLE/GRAIN SIZE (mg/L)									
Method ASTM-D3977C									
Sediment Conc. > 500 µm	**11.37**	0.01 U	**1.10**	**0.96**	0.01 U	NA	NA	NA	NA
Sediment Conc. 500 to 250 µm	**9.65**	**0.64**	**0.88**	**1.5**	**0.11**	NA	NA	NA	NA
Sediment Conc. 250 to 125 µm	0.01 U	0.01 U	0.01 U	0.01 U	0.01 U	NA	NA	NA	NA
Sediment Conc. 125 to 62.5 µm	0.01 U	0.01 U	0.01 U	0.01 U	0.01 U	NA	NA	NA	NA
Sediment Conc. 62.5 to 3.9 µm	0.01 U	0.01 U	**1.48**	0.01 U	0.01 U	NA	NA	NA	NA
Sediment Conc. 3.9 to 1 µm	0.01 U	0.01 U	**0.22**	**0.44**	0.01 U	NA	NA	NA	NA
Sediment Conc. < 1 µm	**0.51**	0.01 U	**0.27**	**3.03**	**8.32**	NA	NA	NA	NA
Previous 1 Hour Precip. (inches) (c)	0.03	0.08	0.00	0.00	0.01	0.00	0.04	0.02	0.04
Previous 12 Hours Precip. (inches) (c)	0.71	0.38	0.00	0.01	0.01	0.00	0.1	0.32	0.29

TABLE 5
EFFLUENT WHOLE WATER SAMPLING ANALYTICAL RESULTS
LONG-TERM STORMWATER TREATMENT SYSTEM
NORTH BOEING FIELD - SEATTLE, WASHINGTON

Sample Location ID	LTST-W-EFF	LTST-W-EFF	LTST-W-EFF	LTST-W-EFF	LTST-W-EFF	LTST-W-EFF	LTST-W-EFF	LTST-W-EFF
Laboratory Data ID	YF79B	YI62A	YM12A	YR11D	YU82A	YY45A	ZE23D	ZF08D
Sample Date	4/8/2014	5/1/2014	6/2/2014	7/10/2014	8/1/2014	9/2/2014	10/9/2014	10/13/2014
Event Type	Monthly	Monthly	Monthly	Monthly	Monthly	Monthly	Monthly	Storm
Sample Type	Grab	Grab	Grab	Grab	Grab	Grab	Grab	Grab
PCBs (µg/L) (a)								
Method SW8082A								
Aroclor 1016	0.005 U	0.005 U	0.005 U	0.005 U	0.005 U	0.005 U	0.005 U	0.005 U
Aroclor 1242	0.005 U	0.005 U	0.005 U	0.005 U	0.005 U	0.008 U	0.008 U	0.005 U
Aroclor 1248	0.008 U	0.005 U	0.005 U	0.010 U	0.005 U	0.005 U	0.005 U	0.005 U
Aroclor 1254	0.005 U	0.005 U	0.005 U	0.005 U	0.004 U	0.005 U	0.005 U	0.005 U
Aroclor 1260	0.005 U	0.005 U	0.005 U	0.005 U	0.005 U	0.005 U	0.005 U	0.005 U
Aroclor 1221	0.005 U	0.005 U	0.005 U	0.005 U	0.005 U	0.005 U	0.005 U	0.005 U
Aroclor 1232	0.005 U	0.013 U	0.013 U	0.005 U	0.013 U	0.005 U	0.005 U	0.005 U
Aroclor 1262	0.005 U	0.005 U	0.005 U	0.005 U	0.005 U	0.005 U	0.005 U	0.005 U
Total PCBs (b)	ND	ND	ND	ND	ND	ND	ND	ND
TOTAL METALS (µg/L)								
Method EPA200.8/6010B,C/7470A								
Arsenic	NA	NA	NA	NA	NA	NA	NA	NA
Cadmium	NA	NA	NA	NA	NA	NA	NA	NA
Chromium	NA	NA	NA	NA	NA	NA	NA	NA
Copper	NA	NA	NA	NA	NA	NA	NA	NA
Iron	NA	NA	NA	NA	NA	NA	NA	NA
Lead	NA	NA	NA	NA	NA	NA	NA	NA
Manganese	NA	NA	NA	NA	NA	NA	NA	NA
Mercury	NA	NA	NA	NA	NA	NA	NA	NA
Nickel	NA	NA	NA	NA	NA	NA	NA	NA
Zinc	NA	NA	NA	NA	NA	NA	NA	NA
DISSOLVED METALS (µg/L)								
Method EPA200.8/6010B,C								
Arsenic	NA	NA	NA	NA	NA	NA	NA	NA
Cadmium	NA	NA	NA	NA	NA	NA	NA	NA
Chromium	NA	NA	NA	NA	NA	NA	NA	NA
Copper	NA	NA	NA	NA	NA	NA	NA	NA
Iron	NA	NA	NA	NA	NA	NA	NA	NA
Lead	NA	NA	NA	NA	NA	NA	NA	NA
Manganese	NA	NA	NA	NA	NA	NA	NA	NA
Nickel	NA	NA	NA	NA	NA	NA	NA	NA
Zinc	NA	NA	NA	NA	NA	NA	NA	NA

TABLE 5
EFFLUENT WHOLE WATER SAMPLING ANALYTICAL RESULTS
LONG-TERM STORMWATER TREATMENT SYSTEM
NORTH BOEING FIELD - SEATTLE, WASHINGTON

Sample Location ID	LTST-W-EFF	LTST-W-EFF	LTST-W-EFF	LTST-W-EFF	LTST-W-EFF	LTST-W-EFF	LTST-W-EFF	LTST-W-EFF
Laboratory Data ID	YF79B	YI62A	YM12A	YR11D	YU82A	YY45A	ZE23D	ZF08D
Sample Date	4/8/2014	5/1/2014	6/2/2014	7/10/2014	8/1/2014	9/2/2014	10/9/2014	10/13/2014
Event Type	Monthly	Monthly	Monthly	Monthly	Monthly	Monthly	Monthly	Storm
Sample Type	Grab	Grab	Grab	Grab	Grab	Grab	Grab	Grab
DISSOLVED METALS (ng/L)								
Method SW7470A								
Mercury	NA	NA	NA	NA	NA	NA	NA	NA
CONVENTIONALS								
pH (SU; EPA 150.1)	NA	NA	NA	NA	NA	NA	NA	NA
Total Suspended Solids (mg/L; SM2540D)	NA	NA	NA	NA	NA	NA	NA	NA
PARTICLE/GRAIN SIZE (mg/L)								
Method ASTM-D3977C								
Sediment Conc. > 500 µm	NA	NA	NA	NA	NA	NA	NA	NA
Sediment Conc. 500 to 250 µm	NA	NA	NA	NA	NA	NA	NA	NA
Sediment Conc. 250 to 125 µm	NA	NA	NA	NA	NA	NA	NA	NA
Sediment Conc. 125 to 62.5 µm	NA	NA	NA	NA	NA	NA	NA	NA
Sediment Conc. 62.5 to 3.9 µm	NA	NA	NA	NA	NA	NA	NA	NA
Sediment Conc. 3.9 to 1 µm	NA	NA	NA	NA	NA	NA	NA	NA
Sediment Conc. < 1 µm	NA	NA	NA	NA	NA	NA	NA	NA
Previous 1 Hour Precip. (inches) (c)	0.00	0.00	0.00	0.00	0.00	0.00	0.00	0.00
Previous 12 Hours Precip. (inches) (c)	0.00	0.00	0.00	0.00	0.00	0.00	0.00	0.00

TEQ = Total Equivalency Quotient
cPAH = Carcinogenic Polycyclic Aromatic Hydrocarbon
PCB = Polychlorinated Biphenyl
SIM = Select Ion Monitoring
-- = Not applicable (grab sample does not require start/end date).
NA = Not Analyzed.
ND = Not Detected.
Bold = Detected compound.

EPA = U.S. Environmental Protection Agency
ASTM = American Society for Testing and Materials
ARI = Analytical Resources Inc.
NOAA = National Oceanic and Atmospheric Administration
µg/L = micrograms per liter
mg/L = milligrams per liter
µm = micrometer
ng/L = nanograms per liter

SU = Standard Units

U = Indicates the compound was not detected at the reported concentration.
Blue = Validation process not completed.

(a) Starting in December 2012, ARI evaluated PCBs in whole water between the Limit of Detection (LOD) and the Limit of Quantitation (LOQ). For these non-detect results, the reported concentration shown is the LOD (1/2 the LOQ).
(b) Total PCBs is the sum of detected aroclors or, if no aroclors are detected, is reported as non-detect (ND).
(c) Precipitation data is from the NOAA Quality Controlled Local Climatological Data for Station 24234/BFI - SEATTLE: BOEING FIELD/KING COUNTY INTERNATIONAL AIRPORT.
(d) Due to a laboratory receipt login error, total metals were analyzed by low level (ng/L); the client was notified and results were reported per client request.

TABLE 6
MH130A STORMWATER FILTRATION AND PCB TESTING RESULTS
LONG-TERM STORMWATER TREATMENT SYSTEM
NORTH BOEING FIELD - SEATTLE, WASHINGTON

	LTST-F-MH130A	LTST-F-MH130A	LTST-F-MH130A	LTST-F-MH130A	LTST-F-MH130A	LTST-F-MH130A	LTST-F-MH130A	LTST-F-MH130A	LTST-F-MH130A	LTST-F-MH130A	LTST-F-MH130A
Laboratory Data ID	XN18J/XN18M	XO76F/XO76H	XQ44J/XQ44M	XT98J/XT98M	XU48F/XU48I	XZ68I	YB86F	YG17F	YR11I	ZE23I	ZF08I
Filtration Start Date	11/4/2013	11/18/2013	12/2/2013	1/6/2014	1/10/2014	2/16/2014	3/5/2014	4/7/2014	7/7/2014	10/6/2014	10/13/2014
Filtration End Date	11/7/2013	11/19/2013	12/5/2013	1/9/2014	1/11/2014	2/17/2014	3/6/2014	4/10/2014	7/10/2014	10/9/2014	10/14/2014
Event Type	Monthly	Storm	Monthly	Quarterly	Storm	Storm	Storm	Quarterly	Quarterly	Quarterly	Storm
PCBs											
Method SW8082A											
Measured Mass in Filter											
Aroclor 1016 (µg)	2.5 U	0.50 U	0.50 U	2.0 U	2.0 U	0.50 U (d)	1.0 U	0.50 U	5.0 U	10 U	1.0 U
Aroclor 1242 (µg)	2.5 U	0.50 U	0.50 U	2.0 U	2.0 U	0.50 U (d)	1.0 U	0.50 U	5.0 U	10 U	1.0 U
Aroclor 1248 (µg)	62 U	30 U	30 U	70 U	60 U	75 U (d)	100 U	75 U	50 U	100 U	75 U
Aroclor 1254 (µg)	**53**	**55**	**48**	**97**	**110**	**88** (d)	**120**	**59**	**61**	**89**	**32**
Aroclor 1260 (µg)	**14**	**16**	**8.5**	**13**	**25**	**20** (d)	**28**	**9.5**	5.0 U	**15**	3.0 U
Aroclor 1221 (µg)	2.5 U	0.50 U	0.50 U	2.0 U	2.0 U	0.50 U (d)	1.0 U	0.50 U	5.0 U	10 U	1.0 U
Aroclor 1232 (µg)	2.5 U	0.50 U	0.50 U	2.0 U	2.0 U	0.50 U (d)	1.0 U	0.50 U	5.0 U	10 U	1.0 U
Aroclor 1262 (µg)	2.5 U	0.50 U	0.50 U	2.0 U	2.0 U	0.50 U (d)	1.0 U	0.50 U	5.0 U	10 U	1.0 U
Total PCBs (a) (µg)	**67**	**71**	**56.5**	**110**	**135**	**108** (d)	**148**	**68.5**	**61**	**104**	**32**
Mass of Filtered Solids:											
Bag Number	241	233	246	223	215	273	293	258	282	261	291
Filter Micron Rating (µm)	1	1	1	1	1	1	1	1	1	1	1
Unused Filter Bag (grams)	143.46	139.22	131.67	143.38	135.33	143.25	143.9	137.75	139.53	140.76	146.38
Dried Filter Bag with Filtered Solids (grams)	159.42	173.26	148.77	166.44	205.66	190.64	184.99	160.94	157.36	154.97	166.63
Total Solids Filtered, Dry Weight (grams)	15.96	34.04	17.10	23.06	70.33	47.39	41.09	23.19	17.83	14.21	20.25
Calculated Concentration of Total PCBs in Filtered Solids, Dry Weight (mg/kg)	**4.20**	**2.09**	**3.30**	**4.77**	**1.92**	**2.28**	**3.60**	**2.95**	**3.42**	**7.32**	**1.58**
Volume of Stormwater Filtered:											
Flow Totalizer at Start of Filtration (gallons)	2,676	2,922	3,229	3,368	3,746	4,418	5,230	6,130	6,418	6,665	6,765
Flow Totalizer at Sample Collection (gallons)	2,922	3,229	3,368	3,736	4,418	5,230	6,130	6,418	6,665	6,765	6,914
Volume of Stormwater Filtered (gallons)	246	307	139	368	672	812	900	288	247	99	149
Calculated Concentration of Total PCBs in Whole Water using flow totalizer data, (µg/L)	**0.072**	**0.061**	**0.107**	**0.079**	**0.053**	**0.035**	**0.043**	**0.063**	**0.065**	**0.277**	**0.057**
PAHs (µg)											
Method SW8270D											
Naphthalene	**1.1**	NA	NA	2.5 U	2.5 U	NA	NA	NA	NA	NA	NA
2-Methylnaphthalene	**1.1**	NA	NA	2.5 U	2.5 U	NA	NA	NA	NA	NA	NA
1-Methylnaphthalene	0.5 U	NA	NA	7.2 M	**5.0**	NA	NA	NA	NA	NA	NA
Acenaphthylene	0.5 U	NA	NA	2.5 U	2.5 U	NA	NA	NA	NA	NA	NA
Acenaphthene	0.5 U	NA	NA	2.5 U	2.5 U	NA	NA	NA	NA	NA	NA
Fluorene	**1.0**	NA	NA	2.5 U	2.5 U	NA	NA	NA	NA	NA	NA
Phenanthrene	**9.2**	NA	NA	**9.7**	**19**	NA	NA	NA	NA	NA	NA
Anthracene	0.5 U	NA	NA	2.5 U	2.5 U	NA	NA	NA	NA	NA	NA
Fluoranthene	**23**	NA	NA	**18**	**60**	NA	NA	NA	NA	NA	NA
Pyrene	**23**	NA	NA	**19**	**37**	NA	NA	NA	NA	NA	NA
Benzo(a)anthracene	**8.4**	NA	NA	**5.5**	**13**	NA	NA	NA	NA	NA	NA
Chrysene	**16**	NA	NA	**14**	**44**	NA	NA	NA	NA	NA	NA
Benzo(a)pyrene	**9.9**	NA	NA	**7.0**	**18**	NA	NA	NA	NA	NA	NA
Indeno(1,2,3-cd)pyrene	**7.5**	NA	NA	**4.8**	**17**	NA	NA	NA	NA	NA	NA
Dibenz(a,h)anthracene	**4.1**	NA	NA	2.5 U	**5.7**	NA	NA	NA	NA	NA	NA
Benzo(g,h,i)perylene	**7.1**	NA	NA	**7.6** J	**20** J	NA	NA	NA	NA	NA	NA
Dibenzofuran	0.5 U	NA	NA	2.5 U	2.5 U	NA	NA	NA	NA	NA	NA
Total Benzofluoranthenes	**19**	NA	NA	**17**	**63**	NA	NA	NA	NA	NA	NA
cPAH TEQ	**14.0**	NA	NA	**9.9**	**28.3**	NA	NA	NA	NA	NA	NA

TABLE 6
MH130A STORMWATER FILTRATION AND PCB TESTING RESULTS
LONG-TERM STORMWATER TREATMENT SYSTEM
NORTH BOEING FIELD - SEATTLE, WASHINGTON

	LTST-F-MH130A	LTST-F-MH130A	LTST-F-MH130A	LTST-F-MH130A	LTST-F-MH130A	LTST-F-MH130A	LTST-F-MH130A	LTST-F-MH130A	LTST-F-MH130A	LTST-F-MH130A	LTST-F-MH130A
Laboratory Data ID	XN18J/XN18M	XO76F/XO76H	XQ44J/XQ44M	XT98J/XT98M	XU48F/XU48I	XZ68I	YB86F	YG17F	YR11I	ZE23I	ZF08I
Filtration Start Date	11/4/2013	11/18/2013	12/2/2013	1/6/2014	1/10/2014	2/16/2014	3/5/2014	4/7/2014	7/7/2014	10/6/2014	10/13/2014
Filtration End Date	11/7/2013	11/19/2013	12/5/2013	1/9/2014	1/11/2014	2/17/2014	3/6/2014	4/10/2014	7/10/2014	10/9/2014	10/14/2014
Event Type	Monthly	Storm	Monthly	Quarterly	Storm	Storm	Storm	Quarterly	Quarterly	Quarterly	Storm
TOTAL METALS (mg/kg)											
Method EPA200.8/6010B.C/7470A/7471A											
Arsenic	NA	**20**	60 U	NA	NA	NA	NA	NA	NA	NA	NA
Cadmium	NA	**9.9**	**23**	NA	NA	NA	NA	NA	NA	NA	NA
Chromium	NA	**33**	**63**	NA	NA	NA	NA	NA	NA	NA	NA
Copper	NA	**96.4**	**130**	NA	NA	NA	NA	NA	NA	NA	NA
Iron	NA	**49,700**	**176,000**	NA	NA	NA	NA	NA	NA	NA	NA
Lead	NA	**49**	**90**	NA	NA	NA	NA	NA	NA	NA	NA
Manganese	NA	**395**	**6240**	NA	NA	NA	NA	NA	NA	NA	NA
Mercury	NA	**2.04**	**1.71**	NA	NA	NA	NA	NA	NA	NA	NA
Nickel	NA	**22**	**50**	NA	NA	NA	NA	NA	NA	NA	NA
Zinc	NA	**905**	**2320**	NA	NA	NA	NA	NA	NA	NA	NA
PRECIPITATION (b)											
Amount During Test (inches)	0.82	0.77	0.12	0.78	1.06	1.64	0.55	0.38	0.00	0.00	0.63

µg/L = micrograms per liter
mg/kg = milligrams per kilogram
µm = micrometer
µg = microgram
NA = Not Analyzed
Bold = Detected compound.

PAH = Polycyclic Aromatic Hydrocarbon
PCB = Polychlorinated Biphenyl
TEQ = Toxicity Equivalency Quotient
EPA = U.S. Environmental Protection Agency
NOAA = National Oceanic and Atmospheric Administration
PSEP = Puget Sound Estuary Program

J = Indicates the analyte was positively identified; the associated numerical value is the approximate concentration of the analyte in the sample.
U = Indicates the compound was not detected at the reported concentration.
UJ = The analyte was not detected in the sample; the reported sample reporting limit is an estimate.
P = The analyte was detected on both chromatographic columns but the quantified values differ by 40% RPD with no obvious chromatographic interference.
The higher of the two values is reported by the laboratory.
Blue = Validation process not completed.

a) Total PCBs is the sum of detected aroclors or, if no aroclors are detected, is reported as non-detect (ND).
(b) Precipitation data is from the NOAA Quality Controlled Local Climatological Data for Station 24234/BFI - SEATTLE: BOEING FIELD/KING COUNTY INTERNATIONAL AIRPORT.
(c) Because the filter bag mass was weighed less after filtration than before filtration, the amount of solids filtered or PCB concentration cannot be estimated.
(d) After reviewing the analytical results for samples LTST-MH130A-021714 and LTST-F-EFF-021714, it was determined that there was a strong indication that the filter bags were inadvertently switched prior to analysis, based on long-standing data trends. The results have been reported on the tables switched from what is reported in the laboratory analytical data.

TABLE 7
LSIV STORMWATER FILTRATION AND PCB TESTING RESULTS
LONG-TERM STORMWATER TREATMENT SYSTEM
NORTH BOEING FIELD - SEATTLE, WASHINGTON

Sample Location ID	LTST-F-LSIV	LTST-F-LSIV	LTST-F-LSIV	LTST-F-LSIV	LTST-F-LSIV	LTST-F-LSIV	LTST-F-LSIV	LTST-F-LSIV	LTST-F-LSIV	LTST-F-LSIV	LTST-F-LSIV
Laboratory Data ID	XN18I/XN18L	XO76E/XO76G	XQ44I/XQ44L	XT98I/XT98L	XU48E/XU48H	XZ68H	YB86E	YG17E	YR11H	ZE23H	ZF08H
Filtration Start Date	11/4/2013	11/18/2013	12/2/2013	1/6/2014	1/10/2014	2/16/2014	3/5/2014	4/7/2014	7/7/2014	10/6/2014	10/13/2014
Filtration End Date	11/7/2013	11/19/2013	12/5/2013	1/9/2014	1/11/2014	2/17/2014	3/6/2014	4/10/2014	7/10/2014	10/9/2014	10/14/2014
Event Type	Monthly	Storm	Monthly	Quarterly	Storm	Storm	Storm	Quarterly	Quarterly	Quarterly	Storm
PCBs											
Method SW8082A											
Measured Mass in Filter											
Aroclor 1016 (µg)	0.10 U	0.10 U	0.50 U	0.10 U	0.10 U	0.50 U	0.50 U	0.10 U	0.10 U	0.10 U	0.10 U
Aroclor 1242 (µg)	0.10 U	0.10 U	0.50 U	0.10 U	0.10 U	0.50 U	0.50 U	0.10 U	0.10 U	0.10 U	0.10 U
Aroclor 1248 (µg)	0.75 U	1.5 U	0.75 U	1.0 U	1.5 U	2.5 U	2.5 U	1.5 U	0.75 U	1.5 U	2.5 U
Aroclor 1254 (µg)	**1.1**	**3.2**	**1.8**	**2.4**	**3.8**	**13**	**11**	**1.7**	**1.4**	**1.0**	**4.0**
Aroclor 1260 (µg)	**0.49**	**2.4**	**0.70**	**1.9**	**2.6**	**5.5**	**5.1**	**0.52**	**0.48**	**0.25**	**1.2** P
Aroclor 1221 (µg)	0.10 U	0.10 U	0.50 U	0.10 U	0.10 U	0.50 U	0.50 U	0.10 U	0.10 U	0.10 U	0.10 U
Aroclor 1232 (µg)	0.10 U	0.10 U	0.50 U	0.10 U	0.10 U	0.50 U	0.50 U	0.10 U	0.10 U	0.10 U	0.10 U
Aroclor 1262 (µg)	0.10 U	0.10 U	0.50 U	0.10 U	0.10 U	0.50 U	0.50 U	0.10 U	0.10 U	0.10 U	0.10 U
Total PCBs (a) (µg)	**1.59**	**5.6**	**2.5**	**4.3**	**6.4**	**18.5**	**16.1**	**2.22**	**1.88**	**1.3**	**5.2** P
Mass of Filtered Solids:											
Bag Number	239	253	222	224	220	256	288	265	277	272	294
Filter Micron Rating (µm)	1	1	1	1	1	1	1	1	1	1	1
Unused Filter Bag (grams)	141.17	137.37	149.01	141.89	148.09	140.50	138.51	139.90	140.1	135.9	143.19
Dried Filter Bag with Filtered Solids (grams)	159.34	171.73	181.57	172.12	160.15	171.12	159.22	161.08	161.22	153.95	165.57
Total Solids Filtered, Dry Weight (grams)	18.17	34.36	32.56	30.23	12.06	30.62	20.71	21.18	21.12	18.05	22.38
Calculated Concentration of Total PCBs in Filtered Solids, Dry Weight (mg/kg)	**0.09**	**0.16**	**0.08**	**0.14**	**0.53**	**0.60**	**0.78**	**0.10**	**0.09**	**0.07**	**0.23**
Volume of Stormwater Filtered:											
Flow Totalizer at Start of Filtration (gallons)	9,019	5,486	5,218	5,324	5,591	5,281	838	1,834	308	380	2021
Flow Totalizer at Sample Collection (gallons)	8,976	5,497	5,324	5,591	6,032	5,965	1,862	1,968	404	2021	2081
Volume of Stormwater Filtered (gallons)	(b)	11 (b)	106	267	441	685	1,024	134	97	1,640	60 (b)
Calculated Concentration of Total PCBs in Whole Water using flow totalizer data, (µg/L)	**(b)**	**(b)**	**0.006**	**0.004**	**0.004**	**0.007**	**0.004**	**0.004**	**0.005**	**0.0002**	**0.023 (b)**
PAHs (µg)											
Method SW8270D											
Naphthalene	2.5 U	NA	NA	2.5 U	2.5 U	NA	NA	NA	NA	NA	NA
2-Methylnaphthalene	2.5 U	NA	NA	2.5 U	**2.6**	NA	NA	NA	NA	NA	NA
1-Methylnaphthalene	2.5 U	NA	NA	**7.6** M	**8.0**	NA	NA	NA	NA	NA	NA
Acenaphthylene	2.5 U	NA	NA	2.5 U	2.5 U	NA	NA	NA	NA	NA	NA
Acenaphthene	2.5 U	NA	NA	2.5 U	2.5 U	NA	NA	NA	NA	NA	NA
Fluorene	2.5 U	NA	NA	2.5 U	2.5 U	NA	NA	NA	NA	NA	NA
Phenanthrene	**4.9**	NA	NA	**14**	**22**	NA	NA	NA	NA	NA	NA
Anthracene	2.5 U	NA	NA	2.5 U	2.5 U	NA	NA	NA	NA	NA	NA
Fluoranthene	**14**	NA	NA	**42**	**91**	NA	NA	NA	NA	NA	NA
Pyrene	**12**	NA	NA	**32**	**47**	NA	NA	NA	NA	NA	NA
Benzo(a)anthracene	**3.1**	NA	NA	**9.0**	**17**	NA	NA	NA	NA	NA	NA
Chrysene	**11**	NA	NA	**36**	**68**	NA	NA	NA	NA	NA	NA
Benzo(a)pyrene	**5.0**	NA	NA	**16**	**28**	NA	NA	NA	NA	NA	NA
Indeno(1,2,3-cd)pyrene	**5.7**	NA	NA	**15**	**27**	NA	NA	NA	NA	NA	NA
Dibenz(a,h)anthracene	2.5 U	NA	NA	**4.8**	**8.5**	NA	NA	NA	NA	NA	NA
Benzo(g,h,i)perylene	**7.1**	NA	NA	**18** J	**29** J	NA	NA	NA	NA	NA	NA
Dibenzofuran	2.5 U	NA	NA	2.5 U	**2.5**	NA	NA	NA	NA	NA	NA
Total Benzofluoranthenes	**18**	NA	NA	**59**	**110**	NA	NA	NA	NA	NA	NA
cPAH TEQ	**7.8**	NA	NA	**25.1**	**44.9**	NA	NA	NA	NA	NA	NA

TABLE 7
LSIV STORMWATER FILTRATION AND PCB TESTING RESULTS
LONG-TERM STORMWATER TREATMENT SYSTEM
NORTH BOEING FIELD - SEATTLE, WASHINGTON

Sample Location ID	LTST-F-LSIV	LTST-F-LSIV	LTST-F-LSIV	LTST-F-LSIV	LTST-F-LSIV	LTST-F-LSIV	LTST-F-LSIV	LTST-F-LSIV	LTST-F-LSIV	LTST-F-LSIV	LTST-F-LSIV
Laboratory Data ID	XN18I/XN18L	XO76E/XO76G	XQ44I/XQ44L	XT98I/XT98L	XU48E/XU48H	XZ68H	YB86E	YG17E	YR11H	ZE23H	ZF08H
Filtration Start Date	11/4/2013	11/18/2013	12/2/2013	1/6/2014	1/10/2014	2/16/2014	3/5/2014	4/7/2014	7/7/2014	10/6/2014	10/13/2014
Filtration End Date	11/7/2013	11/19/2013	12/5/2013	1/9/2014	1/11/2014	2/17/2014	3/6/2014	4/10/2014	7/10/2014	10/9/2014	10/14/2014
Event Type	Monthly	Storm	Monthly	Quarterly	Storm	Storm	Storm	Quarterly	Quarterly	Quarterly	Storm
TOTAL METALS (mg/kg)											
Method EPA200.8/6010B,C/7470A											
Arsenic	NA	50 U	40 U	NA	NA	NA	NA	NA	NA	NA	NA
Cadmium	NA	**3**	**2**	NA	NA	NA	NA	NA	NA	NA	NA
Chromium	NA	**34**	**31** J	NA	NA	NA	NA	NA	NA	NA	NA
Copper	NA	**64** J	**50** J	NA	NA	NA	NA	NA	NA	NA	NA
Iron	NA	**103,000**	**195,000**	NA	NA	NA	NA	NA	NA	NA	NA
Lead	NA	**50**	**40**	NA	NA	NA	NA	NA	NA	NA	NA
Manganese	NA	**686** J	**1300**	NA	NA	NA	NA	NA	NA	NA	NA
Mercury	NA	**0.12**	**0.08**	NA	NA	NA	NA	NA	NA	NA	NA
Nickel	NA	**20**	**11**	NA	NA	NA	NA	NA	NA	NA	NA
Zinc	NA	**520** J	**415**	NA	NA	NA	NA	NA	NA	NA	NA
PRECIPITATION (c)											
Amount During Test (inches)	0.82	0.77	0.12	0.78	1.06	1.64	0.55	0.38	0.00	0.00	0.63

µg/L = micrograms per liter
mg/kg = milligrams per kilogram
µm = micrometer
µg = microgram
NA = Not Analyzed
Bold = Detected compound.

PAH = Polycyclic Aromatic Hydrocarbon
PCB = Polychlorinated Biphenyl
TEQ = Toxicity Equivalency Quotient
EPA = U.S. Environmental Protection Agency
NOAA = National Oceanic and Atmospheric Administration
PSEP = Puget Sound Estuary Program

J = Indicates the analyte was positively identified; the associated numerical value is the approximate concentration of the analyte in the sample.
U = Indicates the compound was not detected at the reported concentration.
UJ = The analyte was not detected in the sample; the reported sample reporting limit is an estimate.
P = The analyte was detected on both chromatographic columns but the quantified values differ by 40% RPD with no obvious chromatographic interference. The higher of the two values is reported by the laboratory.
Blue = Validation process not completed.

(a) Total PCBs is the sum of detected aroclors or, if no aroclors are detected, is the largest reporting limit.
(b) It has been observed that system vibration has intermittently caused the flow meter totalizer to move in reverse.
Therefore, where indicated, the flow volume either could not be determined or was likely falsely low, and whole water concentration of PCBs either could not be determined or was likely falsely high.
(c) Precipitation data is from the NOAA Quality Controlled Local Climatological Data for Station 24234/BFI - SEATTLE: BOEING FIELD/KING COUNTY INTERNATIONAL AIRPORT.

TABLE 8
EFFLUENT STORMWATER FILTRATION AND PCB TESTING RESULTS
LONG-TERM STORMWATER TREATMENT SYSTEM
NORTH BOEING FIELD - SEATTLE, WASHINGTON

Sample Location ID	LTST-F-EFF	LTST-F-EFF	LTST-F-EFF	LTST-F-EFF	LTST-F-EFF	LTST-F-EFF	LTST-F-EFF	LTST-F-EFF	LTST-F-EFF	LTST-F-EFF
Laboratory Data ID	XN18K	XO76I	XQ44K	XT98K	XU48G	XZ68J	YG17G	YR11J	ZE23J	ZF08J
Filtration Start Date	11/4/2013	11/18/2013	12/2/2013	1/6/2014	1/10/2014	2/16/14	4/7/14	7/7/14	10/6/14	10/13/14
Filtration End Date	11/7/2013	11/19/2013	12/5/2013	1/9/2014	1/11/2014	2/17/2014	4/10/2014	7/10/2014	10/9/2014	10/14/2014
Event Type	Monthly	Storm	Monthly	Quarterly	Storm	Storm	Quarterly	Quarterly	Quarterly	Storm
PCBs										
Method SW8082A										
Measured Mass in Filter										
Aroclor 1016 (µg)	1.0 U	0.50 U	0.50 U	0.10 U	0.10 U	1.0 U (d)	0.50 U	1.0 U	0.10 U	0.10 U
Aroclor 1242 (µg)	1.0 U	0.50 U	0.50 U	0.10 U	0.10 U	1.0 U (d)	0.50 U	1.0 U	0.10 U	0.10 U
Aroclor 1248 (µg)	7.5 U	3.8 U	3.1 U	2.5 U	5.0 U	4.0 U (d)	12 U	15 U	10 U	10 U
Aroclor 1254 (µg)	**6.9**	**5.4**	**5.3**	**4.0**	**5.4**	**6.2** (d)	**10**	**18**	**6.4**	**7.2**
Aroclor 1260 (µg)	**1.8**	**2.1**	**1.8**	**0.95**	**3.1** P	**2.3** (d)	1.2 U	1.0 U	0.50 U	**1.1**
Aroclor 1221 (µg)	1.0 U	0.50 U	0.50 U	0.10 U	0.10 U	1.0 U (d)	0.50 U	1.0 U	0.10 U	0.10 U
Aroclor 1232 (µg)	1.0 U	0.50 U	0.50 U	0.10 U	0.10 U	1.0 U (d)	0.50 U	1.0 U	0.10 U	0.10 U
Aroclor 1262 (µg)	1.0 U	0.50 U	0.50 U	0.10 U	0.10 U	1.0 U (d)	0.50 U	1.0 U	0.10 U	0.10 U
Total PCBs (a) (µg)	**8.7**	**7.5**	**7.1**	**4.95**	**8.5**	**8.5** (d)	**10**	**18**	**6.4**	**8.3**
Mass of Filtered Solids:										
Bag Number	209	216	234	248	206	280	268	276	285	289
Filter Micron Rating (µm)	1	1	1	1	1	1	1	1	1	1
Unused Filter Bag (grams)	134.3	146.63	131.35	147.90	139.40	135.77	143.66	138.53	139.07	138.02
Dried Filter Bag with Filtered Solids (grams)	153.58	160.18	151.06	166.06	157.16	149.14	161.73	153.39	151.43	153.63
Total Solids Filtered, Dry Weight (grams)	19.28	13.55	19.71	18.16	17.76	13.37	18.07	14.86	12.36	15.61
Calculated Concentration of Total PCBs in Filtered Solids, Dry Weight (mg/kg)	**0.45**	**0.55**	**0.36**	**0.27**	**0.48**	**0.64**	**0.55**	**1.21**	**0.52**	**0.53**
Volume of Stormwater Filtered:										
Flow Totalizer at Start of Filtration (gallons)	79,444	87,864	99,166	105,894	113,157	124,095	148,544	158,116	169,380	175,074
Flow Totalizer at Sample Collection (gallons)	87,864	99,166	105,894	113,156	124,095	148,787	158,116	169,380	175,074	180,745
Volume of Stormwater Filtered (gallons)	8,419	11,302	6,728	7,263	10,938	24,693	9,572	11,263	5,695	5,671
Calculated Concentration of Total PCBs in Whole Water using flow totalizer data, (µg/L)	**0.0003**	**0.0002**	**0.0003**	**0.0002**	**0.0002**	**0.0001**	**0.0003**	**0.0004**	**0.0003**	**0.0004**
PRECIPITATION (c)										
Amount During Test (inches)	0.82	0.77	0.12	0.78	1.06	1.64	0.38	0.00	0.00	0.63

µg/L = micrograms per liter
mg/kg = milligrams per kilogram
µm = micrometer
µg = microgram
NA = Not Analyzed
Bold = Detected compound.
Blue = Validation process not completed.

cPAH = Carcinogenic Polycyclic Aromatic Hydrocarbon
PCB = Polychlorinated Biphenyl
TEQ =Toxicity Equivalency Quotient
NOAA = National Oceanic and Atmospheric Administration
P = The analyte was detected on both chromatographic columns but the quantified values differ by 40% RPD with no obvious chromatographic interference. The higher of the two values is reported by the laboratory.
U = Indicates the compound was not detected at the reported concentration.

(a) Total PCBs is the sum of detected aroclors or, if no aroclors are detected, is the largest reporting limit.
(b) Because the filter bag mass was weighed less after filtration than before filtration, the amount of solids filtered or PCB concentration cannot be estimated.
(c) Precipitation data is from the NOAA Quality Controlled Local Climatological Data for Station 24234/BFI - SEATTLE: BOEING FIELD/KING COUNTY INTERNATIONAL AIRPORT.
was a strong indication that the filter bags were
inadvertently switched prior to analysis, based on long-standing data trends. The results have been reported on the tables switched from what is reported in the laboratory analytical data.

TABLE 9
BYPASS DURING 2013-2014 SAMPLING EVENTS
LONG-TERM STORMWATER TREATMENT SYSTEM
NORTH BOEING FIELD - SEATTLE, WASHINGTON

Event	Event Begin Date	Event End Date	Precipitation during LS431 Sampling Period (in)	Approximate Start of Bypass	Approximate End of Bypass	Comments
November Monthly	11/4/2013	11/7/2013	0.78	11/7/13 05:01	11/7/13 06:14	
				11/7/13 06:31	11/7/13 07:14	
				11/7/13 08:16	11/7/13 08:52	
December Monthly	12/2/2013	12/5/2013	0.12	n/a	n/a	No bypass occurred during sampling event.
January Quarterly	1/6/2014	1/9/2014	0.78	1/8/14 17:11	1/8/14 17:34	
				1/8/14 18:05	1/8/14 18:26	
April Quarterly	4/7/2014	4/10/2014	0.38	4/8/14 16:41	4/8/14 17:42	
				4/8/14 18:16	4/8/14 18:34	
July Quarterly	7/7/2014	7/10/2014	0.00	n/a	n/a	No bypass occurred during sampling event.
October Quarterly	10/6/2014	10/9/2014	0.00	n/a	n/a	No bypass occurred during sampling event.
Storm Events	11/18/2013	11/19/2013	0.71	11/18/13 11:55	11/18/13 12:15	
				11/18/13 12:55	11/18/13 13:15	
				11/18/13 14:16	11/18/13 14:37	
				11/18/13 15:16	11/18/13 15:41	
				11/18/13 16:52	11/18/13 17:07	
				11/18/13 18:20	11/18/13 18:47	
				11/18/13 20:14	11/18/13 20:48	
				11/18/13 21:21	11/18/13 21:44	
	1/10/2014	1/11/2014	1.06	1/11/14 04:05	1/11/14 05:33	
				1/11/14 08:15	1/11/14 08:30	
				1/11/14 12:24	1/11/14 13:06	
				1/11/14 13:51	1/11/14 14:23	
				1/11/14 14:49	1/11/14 15:27	
				1/11/14 15:52	1/11/14 16:01	
	2/16/2014	2/17/2014	1.61	2/16/14 19:40	2/17/14 00:59	
				2/17/14 02:21	2/17/14 02:40	
				2/17/14 03:19	2/17/14 03:48	
				2/17/14 04:45	2/17/14 05:04	
				2/17/14 06:15	2/17/14 06:39	
				2/17/14 07:24	2/17/14 07:32	
	3/5/2014	3/6/2014	0.55	3/5/14 18:22	3/5/14 18:53	
				3/5/14 19:20	3/5/14 20:24	
				3/5/14 21:29	3/5/14 21:46	
				3/5/14 23:41	3/6/14 00:13	
				3/6/14 01:07	3/6/14 01:31	
				3/6/14 03:35	3/6/13 03:50	
				3/6/14 05:18	3/6/14 05:38	
	10/13/2014	10/14/2014	0.63	10/14/14 00:42	10/14/14 02:15	
				10/14/14 02:37	10/14/14 03:03	
				10/14/14 03:57	10/14/14 04:22	

TABLE 10
MONTHLY PRECIPITATION AND FLOW VOLUMES
LONG-TERM STORMWATER TREATMENT SYSTEM
NORTH BOEING FIELD - SEATTLE, WASHINGTON

Data Source:	KBFI Gauge	Flo-Dar data from LS431	CESF Effluent Data from Clear Water	Calculated	Transducer Data from KC Re-Route Wet Well	Transducer Data from MH130B Weir
	Precipitation (in)	Stormwater Discharge (Mgal)	Stormwater Treated (Mgal)	% Stormwater Treated	King County Re-Route Stormwater (Mgal)	MH130A Stormwater Flowing to LSIV (Mgal)
November 2013	2.92	18.39	11.95	65%	1.09	0.001
December 2013	1.05	8.75 (a)	8.75	100%	0.37	0
January 2014	3.71	23.84	14.46	61%	1.39	0.01
February 2014	5.89	37.18	20.02	54%	2.33	0.15
March 2014	7.84	56.67	29.19	52%	4.05	0.10
April 2014	3.48	25.24	18.85	75%	2.17	0.03
May 2014	2.72	24.31	17.10	70%	1.94	0.01
June 2014	0.29	14.36	13.00	91%	0.95	0
July 2014	0.77 (b)	15.70	14.68	94%	King County Re-Route flow monitoring discontinued with EPA approval.	0.004
August 2014	1.79 (b)	14.62	12.11	83%		0.01
September 2014	2.23 (b)	13.98	10.22	73%		0.03
October 2014	6.68 (b)	40.89	20.75	51%		0.02
Yearly Total	**39.37**	**293.94**	**191.10**	65%		**0.36**

(a) There was little precipitation in December 2013, and no bypass of the LTST system occurred. The Flo-Dar data indicated 10.47 Mgal was discharged. However, as 100% of the water was treated, we substituted Clear Water's data for this month.

(b) The KBFI rain gauge malfunctioned in these months. For July, August, and September 2014, KSEA rain gauge data is presented. For October 2014, the precipitation amount presented is a combination of KSEA data (October 1 - 14) and KBFI data (October 15 - 31).

TABLE 11
STORM DRAIN MANHOLE SOLIDS AND SEDIMENT TRAP ANALYTICAL DATA
NORTH BOEING FIELD

SPU Sample ID:		**SL4-T1**	SL4-T1	SL4-T1	SL4-T1	SL4-T1	SL4-T1	SL4-T1	SL4-T1	SL4-T1	SL4-T1	SL4-T1	SL4-T1	SL4-T1	SL4-T1	SL4-T1
Boeing Manhole No.:	MH100	MH422	MH422	MH422	MH422	MH422	MH422	MH422	MH422	MH422	MH422	MH422	MH422	MH422	MH422	MH422
Lab ID:	HS89A	IK38A	JE01B	KA63E	KK75A/KL08A	KY79C	LV54A	MN63B	NI22A	OC25C	OU11B	QS17A	SQ45A	UR61B	WP79A	YI11A
Sample Type:	Grab	Sed. Trap	Sed. Trap	Sed. Trap	Sed. Trap	Sed. Trap	Sed. Trap	Sed. Trap	Sed. Trap	Sed. Trap	Sed. Trap	Sed. Trap	Sed. Trap	Sed. Trap	Sed. Trap	Sed. Trap
Date Deployed:		3/7/2005	8/11/2005	3/16/2006	10/11/2006	1/8/2007	5/14/2007	10/29/2007	3/18/2008	7/30/2008	12/3/2008	4/6/2009	11/12/2010	4/5/2011	4/24/2012	5/13/2013
Date Collected:	2/16/2005	8/11/2005	3/16/2006	10/11/2006	1/8/2007	5/14/2007	10/29/2007	3/18/2008	7/30/2008	12/3/2008	4/6/2009	4/8/2010	4/5/2011	4/24/2012	5/13/2013	4/25/2014
TOTAL METALS (mg/kg-dry)																
(Method 6000-7000 series)																
Arsenic	20	11	10	30	9	20	6	19	10	9 U	NA	15	NA	10 U	10	20
Copper	102	83.6	110	325	133 J	123	79.3	80.1	142	168	NA	140	NA	97.5	99.2	157 J
Lead	142	140	97 J	216	159	227	84	90	190	215	NA	309	NA	117	141	162
Mercury	0.2	1.10	0.93 J	8.3	3.65	2.66	1.16 J	0.43	2.64	0.33	NA	0.36	NA	0.15	0.18	0.25 J
Zinc	411	368	435	1,140	382	474	313	717	563	518	NA	554	NA	487	538	833
NWTPH-Dx (mg/kg)																
Diesel-Range Hydrocarbons	40	230	490	NA	350	710	NA	300	99 U	71	NA	100	NA	100	NA	260
Motor Oil-Range Hydrocarbons	190	970	1,800	NA	930	3,500	NA	1,100	470	450	NA	720	NA	460	NA	1,500
PCBs (µg/kg)																
(PSDDA PCB SW8082)																
Aroclor 1016	95 U	29 U	6,200 U	21,000 U	51,000 U	87,000 U	4,700 U	3,100 U	740 U	2,200 U	250 U	160 U	390 U	96 U	46 U	94 U
Aroclor 1242	95 U	29 U	6,200 U	21,000 U	51,000 U	87,000 U	4,700 U	3,100 U	740 U	2,200 U	250 U	160 U	390 U	96 U	46 U	240 U
Aroclor 1248	95 U	29 U	41,000	110,000 U	100,000 U	240,000	12,000	3,100 U	3,700 U	4,400 U	380 U	1,600 U	970 U	110	180 U	94 U
Aroclor 1254	1,600	10,000	55,000	110,000	260,000	180,000	9,800	7,600	10,000	19,000	680	3,400	3,400	350	770	1,300
Aroclor 1260	380 P	1,200 U	11,000	21,000 U	51,000 U	87,000 U	4,700 U	3,100 U	990 U	2,200 U	250 U	550	690	160	260	210 U
Aroclor 1221	95 U	29 U	6,200 U	21,000 U	26,000 U	87,000 U	4,700 U	3,100 U	740 U	2,200 U	250 U	160 U	390 U	96 U	46 U	94 U
Aroclor 1232	95 U	29 U	6,200 U	21,000 U	51,000 U	87,000 U	4,700 U	3,100 U	740 U	2,200 U	250 U	160 U	390 U	96 U	46 U	94 U
Aroclor 1262	NA	NA	NA	NA	NA	NA	NA	NA	740 U	NA	NA	NA	NA	96 U	46 U	94 U
Aroclor 1268	NA	NA	NA	NA	NA	NA	NA	NA	740 U	NA	NA	NA	NA	NA	NA	NA
Total PCBs	1,980	10,000	107,000	110,000	260,000	420,000	21,800 *	7,600	10,000 *	19,000 *	680 *	3,950	4,090	620	1,030	1,300
CONVENTIONAL PARAMETERS (%)																
Total Solids (EPA 160.3) (%)	38.80	72.80 J	71.30 J	37.60	75.00	NA	NA	67.70	NA	49.60	NA	59.50	59.50	50.70	43.52	44.22
Total Organic Carbon (Plumb, 1981 and PSEP 1986) (%)	6.60	4.29	7.86	NA	3.45	NA	NA	3.83	NA	3.98	NA	5.65	4.64	3.10	8	6.21
Reported as Dry Wt		P,S,T,M	P,S,T,M	P,S,M	P,S,T,M	P,S,T,M		P,S,T,M	M	M		P,S,T,M	P	P,S,T,M	P,S,T,M	P,S,T,M
Reported as As Received							P,S,M		P,S,T	P,S,T	P,S					
Not Analyzed Due to Low Sample Volume				T			T				T,M		S,T,M			

TABLE 11
STORM DRAIN MANHOLE SOLIDS AND SEDIMENT TRAP ANALYTICAL DATA
NORTH BOEING FIELD

SPU Sample ID:	**SL4-T2**	SL4-T2	SL4-T2	SL4-T2	SL4-T2	SL4-T2	SL4-T2	SL4-T2	SL4-T2	SL4-T2	SL4-T2	SL4-T2	SL4-T2	SL4-T2	SL4-T2
Boeing Manhole No.:	MH356	MH356	MH356	MH356	MH356	MH356	MH356	MH356	MH356	MH356	MH356	MH356	MH356	MH356	MH356
Lab ID:	IK38F	JE01A	KA63D	KK75B	KY79D	LV54B	MN63A	NI22B	OC25A	OU11A	QS17B	SQ45B	UR61C	WP79B	YI11B
Sample Type:	Sed. Trap	Sed. Trap	Sed. Trap	Sed. Trap	Sed. Trap	Sed. Trap	Sed. Trap	Sed. Trap	Sed. Trap	Sed. Trap	Sed. Trap	Sed. Trap	Sed. Trap	Sed. Trap	Sed. Trap
Date Deployed:	3/7/2005	8/11/2005	3/16/2006	10/11/2006	1/8/2007	5/14/2007	10/29/2007	3/18/2008	7/30/2008	12/3/2008	4/6/2009	11/12/2010	4/5/2011	4/24/2012	5/13/2013
Date Collected:	8/11/2005	3/16/2006	10/11/2006	1/8/2007	5/14/2007	10/29/2007	3/18/2008	7/30/2008	12/3/2008	4/6/2009	4/8/2010	4/5/2011	04/24/2012	5/13/2013	4/25/2014
TOTAL METALS (mg/kg-dry)															
(Method 6000-7000 series)															
Arsenic	NA	NA	50 U	NA	NA	5 U	NA	NA	NA	NA	NA	NA	20 U	10 U	20
Copper	NA	NA	276	NA	NA	40.9	NA	NA	NA	NA	NA	NA	249	139	205
Lead	NA	NA	300	NA	NA	43	NA	NA	NA	NA	NA	NA	272	132	231
Mercury	NA	NA	0.6	NA	NA	0.08	NA	NA	NA	NA	NA	NA	0.42	0.28	0.29
Zinc	NA	NA	1,560	NA	NA	222	NA	NA	NA	NA	NA	NA	1,470	879	1,500
NWTPH-Dx (mg/kg)															
Diesel-Range Hydrocarbons	NA	NA	NA	NA	NA	NA	NA	NA	NA	NA	NA	NA	770	NA	1,700
Motor Oil-Range Hydrocarbons	NA	NA	NA	NA	NA	NA	NA	NA	NA	NA	NA	NA	2,800	NA	3,100
PCBs (µg/kg)															
(PSDDA PCB SW8082)															
Aroclor 1016	21 U	210 U	300 U	27 U	19 U	35 U	13 U	24 U	9.9 U	34 U	79 U	26 U	340 U	47 U	48 U
Aroclor 1242	21 U	210 U	230 U	27 U	19 U	35 U	13 U	24 U	9.9 U	34 U	79 U	26 U	340 U	47 U	48 U
Aroclor 1248	21 U	210 U	300 U	13 U	19 U	35 U	19 U	24 U	9.9 U	34 U	120 U	100 U	340 U	47 U	72 U
Aroclor 1254	500 P	890	760	180	70	90	47	24	10	48	260	370	400	250	390
Aroclor 1260	340	570	470	130	58	43	38	24 U	9.9 U	34 U	200	310	350	190	230
Aroclor 1221	21 U	210 U	75 U	13 U	19 U	35 U	13 U	24 U	9.9 U	34 U	79 U	26 U	340 U	47 U	48 U
Aroclor 1232	21 U	210 U	380 U	13 U	19 U	35 U	13 U	24 U	9.9 U	34 U	79 U	26 U	340 U	47 U	48 U
Aroclor 1262	NA	NA	NA	NA	NA	NA	NA	24 U	NA	NA	NA	NA	340 U	47 U	48 U
Aroclor 1268	NA	NA	NA	NA	NA	NA	NA	24 U	NA	NA	NA	NA	NA	NA	NA
Total PCBs	840	1460	1230	310	128	133 *	85 *	24 *	10 *	48 *	460	680	750	440	620
CONVENTIONAL PARAMETERS (%)															
Total Solids (EPA 160.3) (%)	NA	NA	8.93	NA	NA	NA	NA	NA	NA	NA	25.00	28.10	27.60	37.65	37.04
Total Organic Carbon (Plumb, 1981 and PSEP 1986) (%)	NA	NA	NA	NA	NA	NA	NA	NA	NA	NA	NA	16.1	17.7	8.57	12.3
Reported as Dry Wt	P	P,S	P,S,M	P,S	P						P,S	P	P,S,T,M	P,S,T,M	P,S,T,M
Reported as As Received						P,M	P	P	P,S	P					
Not Analyzed Due to Low Sample Volume	S,T,M	T,M	T	T,M	S,T,M	S,T	S,T,M	S,T,M	T,M	S,T,M	T,M	S,T,M			

TABLE 11
STORM DRAIN MANHOLE SOLIDS AND SEDIMENT TRAP ANALYTICAL DATA
NORTH BOEING FIELD

SPU Sample ID:	**SL4-T3**	SL4-T3	SL4-T3	SL4-T3	SL4-T3	SL4-T3	SL4-T3	SL4-T3	SL4-T3	SL4-T3	SL4-T3	SL4-T3	SL4-T3	SL4-T3	SL4-T3
Boeing Manhole No.:	MH364	MH364	MH364	MH364	MH364	MH364	MH364	MH364	MH364	MH364	MH364	MH364	MH364	MH364	MH364
Lab ID:	IK38G	JE01C	KA63A	KK75C/KL08B	KY79E	LV54C	MN63D	NI22D	OC25B	OU11D	QS17C	SQ45C	UR61D	WP79C	YI11C
Sample Type:	Sed. Trap	Sed. Trap	Sed. Trap	Sed. Trap	Sed. Trap	Sed. Trap	Sed. Trap	Sed. Trap	Sed. Trap	Sed. Trap	Sed. Trap	Sed. Trap	Sed. Trap	Sed. Trap	Sed. Trap
Date Deployed:	3/7/2005	8/11/2005	3/16/2006	10/11/2006	1/8/2007	5/14/2007	10/29/2007	3/18/2008	7/30/2008	12/3/2008	4/6/2009	11/12/2010	4/5/2011	4/24/2012	5/13/2013
Date Collected:	8/11/2005	3/16/2006	10/11/2006	1/8/2007	5/14/2007	10/29/2007	3/18/2008	7/30/2008	12/3/2008	4/6/2009	4/8/2010	4/5/2011	04/24/2012	5/13/2013	4/25/2014
TOTAL METALS (mg/kg-dry)															
(Method 6000-7000 series)															
Arsenic	NA	30 U	100 U	10 U	NA	5 U	NA	NA	NA	NA	NA	NA	70 U	50 U	40 U
Copper	NA	99	106	72.2	NA	4.3	NA	NA	NA	NA	NA	NA	110	58	82
Lead	NA	120	100	97	NA	4	NA	NA	NA	NA	NA	NA	90	50	60
Mercury	NA	0.3	0.7 U	0.09 U	NA	0.03 U	NA	NA	NA	NA	NA	NA	0.1	0.08	0.11
Zinc	NA	448	660	293	NA	30	NA	NA	NA	NA	NA	NA	640	393	508
NWTPH-Dx (mg/kg)															
Diesel-Range Hydrocarbons	NA	320	NA	NA	NA	NA	NA	NA	NA	NA	NA	NA	150	NA	190
Motor Oil-Range Hydrocarbons	NA	1,200	NA	NA	NA	NA	NA	NA	NA	NA	NA	NA	540	NA	610
PCBs (µg/kg)															
(PSDDA PCB SW8082)															
Aroclor 1016	20 U	160 U	78 U	49 U	(a)	34 U	10 U	13 U	10 U	21 U	110 U	20 U	270 U	48 U	9.7 U
Aroclor 1242	20 U	160 U	78 U	49 U	(a)	34 U	10 U	13 U	10 U	21 U	110 U	20 U	270 U	48 U	9.7 U
Aroclor 1248	20 U	270 U	160 U	120 U	(a)	34 U	20 U	13 U	10 U	21 U	110 U	99 U	270 U	48 U	48 U
Aroclor 1254	1,400	1,300	480	430	(a)	34 U	65	32	26	28	250	370	420	210	400
Aroclor 1260	380 U	510	150	140	(a)	34 U	25	13 U	10 U	21 U	110 U	180	280	110	170
Aroclor 1221	20 U	160 U	39 U	49 U	(a)	34 U	10 U	13 U	10 U	21 U	110 U	20 U	270 U	48 U	9.7 U
Aroclor 1232	20 U	310 U	160 U	49 U	(a)	34 U	10 U	13 U	10 U	21 U	110 U	20 U	270 U	48 U	9.7 U
Aroclor 1262	NA	NA	NA	NA	NA	NA	NA	13 U	NA	NA	NA	NA	270 U	48 U	9.7 U
Aroclor 1268	NA	NA	NA	NA	NA	NA	NA	13 U	NA	NA	NA	NA	NA	NA	NA
Total PCBs	1,400	1810	630	570	(a)	34 * U	90 *	32 *	26 *	28 *	250	550	700	320	570
CONVENTIONAL PARAMETERS (%)															
Total Solids (EPA 160.3) (%)	NA	13.40 J	4.93	40.80	NA	NA	NA	NA	NA	NA	17.50	31.90	18.00	27.42	30.30
Total Organic Carbon (Plumb, 1981 and PSEP 1986) (%)	NA	5.80	NA	2.38	NA	NA	NA	NA	NA	NA	NA	3.14	7.67	6.13	3.57
Reported as Dry Wt	P	P,S,T,M	P,M	P,S,M	P						P,S	P	P,S,T,M	P,S,T,M	P,S,T,M
Reported as As Received						P,M	P,S	P	P,S	P					
Not Analyzed Due to Low Sample Volume	S,T,M		S,T	T	S,T,M	S,T	T,M	S,T,M	T,M	S,T,M	T,M	S,T,M			

TABLE 11
STORM DRAIN MANHOLE SOLIDS AND SEDIMENT TRAP ANALYTICAL DATA
NORTH BOEING FIELD

SPU Sample ID:	**SL4-T4**	SL4-T4	SL4-T4	SL4-T4	SL4-T4	SL4-T4	SL4-T4	SL4-T4	SL4-T4	SL4-T4	SL4-T4	SL4-T4	SL4-T4	SL4-T4	SL4-T4	SL4-T4
Boeing Manhole No.:	MH221A	MH221A	MH221A	MH221A	MH221A	MH221A	MH221A	MH221A	MH221A	MH221A	MH221A	MH221A	MH221A	MH221A	MH221A	MH221A
Lab ID:	HS89B	IK38B	JE01D	KA63B	KK75D/KL08C	KY79F	LV54D	MN63E	NI22E	OC25E	OU11E	QS17D	SQ45D	UR61F	WP79E	YI11D
Sample Type:	Grab	Sed. Trap	Sed. Trap	Sed. Trap	Sed. Trap	Sed. Trap	Sed. Trap	Sed. Trap	Sed. Trap	Sed. Trap	Sed. Trap	Sed. Trap	Sed. Trap	Sed. Trap	Sed. Trap	Sed. Trap
Date Deployed:		3/8/2005	8/11/2005	3/16/2006	10/11/2006	1/8/2007	5/14/2007	10/29/2007	3/18/2008	7/30/2008	12/3/2008	4/6/2009	11/12/2010	4/5/2011	4/24/2012	5/13/2013
Date Collected:	2/16/2005	8/11/2005	3/16/2006	10/11/2006	1/8/2007	5/14/2007	10/29/2007	3/18/2008	7/30/2008	12/3/2008	4/6/2009	4/8/2010	4/5/2011	04/24/2012	5/13/2013	04/25/2014
TOTAL METALS (mg/kg-dry)																
(Method 6000-7000 series)																
Arsenic	12	NA	20	70	10	NA	50	18	NA	NA	5.0 U	30	NA	30	20	30
Copper	38.5	NA	134	271	125	NA	329	85.8	NA	NA	61.4	334	NA	408	365	425
Lead	50	NA	190	330	175	NA	288	115	NA	NA	83	382	NA	399	288	347
Mercury	0.09	NA	0.4	0.6	0.4	NA	0.5	0.21	NA	NA	0.11	0.37	NA	0.47	0.33	0.46
Zinc	332	NA	733	2,460	828	NA	1,990	1,080	NA	NA	317	1,880	NA	1,920	1460	2030
NWTPH-Dx (mg/kg)																
Diesel-Range Hydrocarbons	120	NA	580	NA	1,200	NA	NA	100	NA	NA	1,300	380	NA	540	NA	950
Motor Oil-Range Hydrocarbons	210	NA	1,800	NA	1,300	NA	NA	420	NA	NA	3,400	1,900	NA	1,700	NA	3200
PCBs (µg/kg)																
(PSDDA PCB SW8082)																
Aroclor 1016	120 U	9.8 U	95 U	94 U	96 U	160 U	45 U	75 U	30 U	50 U	82 U	70 U	28 U	400 U	47 U	98 U
Aroclor 1242	120 U	9.8 U	95 U	120 U	96 U	160 U	45 U	75 U	30 U	50 U	82 U	70 U	28 U	400 U	47 U	98 U
Aroclor 1248	120 U	9.8 U	100 U	140 U	96 U	160 U	45 U	75 U	200 U	50 U	82 U	210 U	110 U	400 U	47 U	120 U
Aroclor 1254	960	1,900 P	750	580	1,000	790	1,200	240	510 J	100	160	640	430	690	520	930
Aroclor 1260	530	850	340	360	700	800	680	200	270 J	140	180	430	340	690	290	560
Aroclor 1221	120 U	9.8 U	95 U	23 U	96 U	160 U	45 U	75 U	30 U	50 U	82 U	70 U	28 U	400 U	47 U	98 U
Aroclor 1232	120 U	9.8 U	95 U	94 U	96 U	160 U	45 U	75 U	30 U	50 U	82 U	70 U	28 U	400 U	47 U	98 U
Aroclor 1262	NA	NA	NA	NA	NA	NA	NA	NA	30 U	NA	NA	NA	NA	400 U	47 U	98 U
Aroclor 1268	NA	NA	NA	NA	NA	NA	NA	NA	30 U	NA	NA	NA	NA	NA	NA	NA
Total PCBs	1490	2750	1090	940	1700	1590	1,880	440 *	780 * J	240 *	340 *	1070	770	1380	810	1490
CONVENTIONAL PARAMETERS (%)																
Total Solids (EPA 160.3) (%)	75.70	NA	41.60 J	16.2	42.30	NA	NA	50.40	NA	NA	NA	28.10	29.60	24.50	26.78	30.01
Total Organic Carbon (Plumb, 1981 and PSEP 1986) (%)	1.00	NA	5.41	NA	4.34	NA	NA	4.38	NA	NA	NA	12.1	19.3	17.6	7.46	11.2
Reported as Dry Wt		P,S	P,S,T,M	P,M	P,S,T,M	P	P,M	M				P,S,T,M	P	P,S,T,M	P,S,T,M	P,S,T,M
Reported as As Received								P,S,T	P,S	P,S	P,S,T,M					
Not Analyzed Due to Low Sample Volume		T,M		S,T		S,T,M	S,T		T,M	T,M			S,T,M			

TABLE 11
STORM DRAIN MANHOLE SOLIDS AND SEDIMENT TRAP ANALYTICAL DATA
NORTH BOEING FIELD

SPU Sample ID:	**SL4-T4A**	SL4-T4A	SL4-T4A	SL4-T4A	SL4-T4A	SL4-T4A	SL4-T4A	SL4-T4A	SL4-T4A	SL4-T4A	SL4-T4A	SL4-T4A	SL4-T4A	SL4-T4A	SL4-T4A	SL4-T4A
Boeing Manhole No.:	MH229A	MH229A	MH229A	MH229A	MH229A	MH229A	MH229A	MH229A	MH229A	MH229A	MH229A	MH229A	MH229A	MH229A	MH229A	MH229A
Lab ID:	HS89D	IK38D	JE01F	KA63G	KK75E/KL08D	KY79G	LV54E	MN63G	NI22G	OC25G	OU11G	QS17F	SQ45G	UR61G	WP79D	YI11E
Sample Type:	Grab	Sed. Trap	Sed. Trap	Sed. Trap	Sed. Trap	Sed. Trap	Sed. Trap	Sed. Trap	Sed. Trap	Sed. Trap	Sed. Trap	Sed. Trap	Sed. Trap	Sed. Trap	Sed. Trap	Sed. Trap
Date Deployed:		3/8/2005	8/11/2005	3/16/2006	10/11/2006	1/8/2007	5/14/2007	10/29/2007	3/18/2008	7/30/2008	12/3/2008	4/6/2009	11/12/2010	4/5/2011	4/24/2012	5/13/2013
Date Collected:	2/16/2005	8/11/2005	3/16/2006	10/11/2006	1/8/2007	5/14/2007	10/29/2007	3/18/2008	7/30/2008	12/3/2008	4/6/2009	4/8/2010	4/5/2011	4/24/2012	5/13/2013	04/25/2014
TOTAL METALS (mg/kg-dry)																
(Method 6000-7000 series)																
Arsenic	30	16	13	20	12	NA	6	NA	NA	NA	NA	14	NA	20	20	30
Copper	85.5	94.3	75.2	262	76.0	NA	61.0	NA	NA	NA	NA	248 J	NA	419	356	367
Lead	155	144	116	414	121	NA	77	NA	NA	NA	NA	376 J	NA	506	313	403
Mercury	0.07	0.19	0.10	0.3	0.09	NA	0.07	NA	NA	NA	NA	0.23	NA	0.34	0.25	0.32
Zinc	1,130	460	337	1,220	433	NA	309	NA	NA	NA	NA	551	NA	1,430	1210	1590
NWTPH-Dx (mg/kg)																
Diesel-Range Hydrocarbons	200	100	180	NA	140	NA	NA	NA	NA	NA	NA	210	NA	250	NA	450
Motor Oil-Range Hydrocarbons	1,100	410	1,100	NA	600	NA	NA	NA	NA	NA	NA	1,400	NA	1,200	NA	2100
PCBs (µg/kg)																
(PSDDA PCB SW8082)																
Aroclor 1016	140 U	9.8 U	9.9 U	81 U	9.8 U	(a)	11 U	10 U	15 U	11 U	10 U	53 U	22 U	46 U	9.6 U	10 U
Aroclor 1242	140 U	9.8 U	9.9 U	81 U	9.8 U	(a)	11 U	10 U	15 U	11 U	10 U	53 U	22 U	46 U	9.6 U	10 U
Aroclor 1248	140 U	9.8 U	9.9 U	81 U	9.8 U	(a)	22	10 U	15 U	11 U	10 U	270 U	22 U	46 U	19 U	35 U
Aroclor 1254	3,700	290 P	39	83	41	(a)	49	16	28	11 U	10 U	510	67	100	80	120
Aroclor 1260	1,900	160	75	160	62	(a)	28	26	30	11 U	10 U	170	87	160	76	120
Aroclor 1221	140 U	9.8 U	9.9 U	81 U	9.8 U	(a)	11 U	10 U	15 U	11 U	10 U	53 U	22 U	46 U	9.6 U	10 U
Aroclor 1232	140 U	9.8 U	9.9 U	81 U	9.8 U	(a)	11 U	10 U	15 U	11 U	10 U	53 U	28 U	46 U	9.6 U	10 U
Aroclor 1262	NA	NA	NA	NA	NA	NA	NA	NA	15 U	NA	NA	NA	NA	46 U	9.6 U	10 U
Aroclor 1268	NA	NA	NA	NA	NA	NA	NA	NA	15 U	NA	NA	NA	NA	NA	NA	NA
Total PCBs	5600	450	114	243	103	(a)	99 *	42 *	58 *	11 * U	10 * U	680	154	260	156	240
CONVENTIONAL PARAMETERS (%)																
Total Solids (EPA 160.3) (%)	66.60	47.30 J	NA	27.8	50.50	NA	NA	NA	NA	NA	NA	62.10	31.90	21.70	25.28	26.34
Total Organic Carbon (Plumb, 1981 and PSEP 1986) (%)	3.88	5.35	NA	NA	4.06	NA	NA	NA	NA	NA	NA	9.17	10.6	17.6	10.8	5.21
Reported as Dry Wt		P,S,T,M	P,S,T,M	P,M	P,S,T,M	P						P,S,T,M	P	P,S,T,M	P,S,T,M	P,S,T,M
Reported as As Received							P,M	P,S	P,S	P	P,S					
Not Analyzed Due to Low Sample Volume				S,T		S,T,M	S,T	T,M	T,M	S,T,M	T,M		S,T,M			

TABLE 11
STORM DRAIN MANHOLE SOLIDS AND SEDIMENT TRAP ANALYTICAL DATA
NORTH BOEING FIELD

SPU Sample ID:	**SL4-T5**	SL4-T5	SL4-T5	SL4-T5	SL4-T5	SL4-T5	SL4-T5	SL4-T5	SL4-T5	SL4-T5	SL4-T5	SL4-T5	SL4-T5	SL4-T5	SL4-T5	SL4-T5
Boeing Manhole No.:	MH363	MH363	MH363	MH363	MH363	MH363	MH363	MH363	MH363	MH363	MH363	MH363	MH363	MH363	MH363	MH363
Lab ID:	HS89C	IK38C	JE01E	KA63C	KK75F/KL08E	KY79B	LV54F	MN63C	NI22C	OC25D	OU11C	QS17E	SQ45E	UR61E	WP79F	YI11F
Sample Type:	Grab	Sed. Trap	Sed. Trap	Sed. Trap	Sed. Trap	Sed. Trap	Sed. Trap	Sed. Trap	Sed. Trap	Sed. Trap	Sed. Trap	Sed. Trap	Sed. Trap	Sed. Trap	Sed. Trap	Sed. Trap
Date Deployed:		3/7/2005	8/11/2005	3/16/2006	10/11/2006	1/8/2007	5/14/2007	10/29/2007	3/18/2008	7/30/2008	12/3/2008	4/6/2009	11/12/2010	4/5/2011	4/24/2012	5/13/2013
Date Collected:	2/16/2005	8/11/2005	3/16/2006	10/11/2006	1/8/2007	5/14/2007	10/29/2007	3/18/2008	7/30/2008	12/3/2008	4/6/2009	4/8/2010	4/5/2011	04/24/2012	5/13/2013	04/25/2014
TOTAL METALS (mg/kg-dry)																
(Method 6000-7000 series)																
Arsenic	8	21	20 U	40 U	10	40 U	40 U	10	20	20	20	15	20	10	20	40
Copper	45.1	148	297	640	140	251	366	257	328	556	764	287	560	173	289	261
Lead	110	109	184	310	102	210	240	186	199	273	275	277	151	149	263	226
Mercury	0.7	1.12	2.02	2.9	5.11	1.8	4.4	1.07	0.6 J	1.0	0.7	0.34	0.85	0.40	0.88	0.66
Zinc	272	553	717	1,370	428	751	1,120	611	933	1,510	1280	705	670	1,040	2000	2030
NWTPH-Dx (mg/kg)																
Diesel-Range Hydrocarbons	47	390	1,200	1,200	840	580	460	1,500	220	120 J	3,900	340	470	250	NA	1600
Motor Oil-Range Hydrocarbons	190	1,400	4,800	5,900	3,100	3,500	2900	6,900	1,100	710 J	12,000	1,800	1,400	720	NA	4200
PCBs (µg/kg)																
(PSDDA PCB SW8082)																
Aroclor 1016	950 U	49 U	7,600 U	55,000 U	66,000 U	11,000 U	650 U	4,600 U	250 U	510 U	1,100 U	94 U	400 U	240 U	93 U	240 U
Aroclor 1242	950 U	49 U	7,600 U	55,000 U	66,000 U	11,000 U	650 U	4,600 U	250 U	510 U	1,100 U	94 U	400 U	240 U	93 U	1200 U
Aroclor 1248	1,900 U	49 U	48,000	660,000 U	130,000 U	90,000	25,000	7,000 U	1,700 U	1,000 U	1,600 U	940 U	1,200 U	850	1900 U	240 U
Aroclor 1254	7,000	24,000	54,000	800,000	200,000	93,000	37,000	16,000	4,200 J	3,100	2,100	2,200	3,000	2,000	7100	4300
Aroclor 1260	950 U	2,400 U	12,000	130,000 U	66,000 U	23,000 U	650 U	4,600 U	500 U	510 U	1,100 U	350	610	720	940	850 U
Aroclor 1221	480 U	49 U	7,600 U	55,000 U	66,000 U	11,000 U	650 U	4,600 U	250 U	510 U	1,100 U	94 U	400 U	240 U	93 U	240 U
Aroclor 1232	1,400 U	49 U	7,600 U	55,000 U	130,000 U	11,000 U	650 U	4,600 U	250 U	510 U	1,100 U	94 U	400 U	240 U	93 U	240 U
Aroclor 1262	NA	NA	NA	NA	NA	NA	NA	NA	250 U	NA	NA	NA	NA	240 U	93 U	240 U
Aroclor 1268	NA	NA	NA	NA	NA	NA	NA	NA	250 U	NA	NA	NA	NA	NA	NA	NA
Total PCBs	7,000	24,000	114,000	800,000	200,000	183,000	62,000	16,000	4,200 * J	3,100	2,100	2,550	3,610	3,570	8,040	4,300
CONVENTIONAL PARAMETERS (%)																
Total Solids (EPA 160.3) (%)	79.90	NA	54.60 J	28.80	62.70	27.10	27.10	45.00	34.20	33.50	26.40	52.90	45.60	39.60	25.8	32.94
Total Organic Carbon (Plumb, 1981 and PSEP 1986) (%)	0.76	NA	7.59	11.0	4.76	8.76	9.95	11.4	NA	13.1	14.6	9.84	7.46	4.46	11	7.87
Reported as Dry Wt		P,S,T,M	P,S,T,M	P,S,T,M	P,S,T,M	P,S,T,M	P,S,T,M	P,S,T,M	M	P,S,T,M	P,S,T,M	P,S,T,M	P,S,T,M	P,S,T,M	P,S,T,M	P,S,T,M
Reported as As Received									P,S,T							
Not Analyzed Due to Low Sample Volume																

TABLE 11
STORM DRAIN MANHOLE SOLIDS AND SEDIMENT TRAP ANALYTICAL DATA
NORTH BOEING FIELD

SPU Sample ID:	**SL4-T5A**	SL4-T5A	SL4-T5A	SL4-T5A	SL4-T5A	SL4-T5A	SL4-T5A	SL4-T5A	SL4-T5A	SL4-T5A	SL4-T5A	SL4-T5A	SL4-T5A	SL4-T5A(2) (b)	SL4-T5A(2) (b)	SL4-T5A(2) (b)
Boeing Manhole No.:	MH178	MH178	MH178	MH178	MH178	MH178	MH178	MH178	MH178	MH178	MH178	MH178	MH178	KC wet well (b)	KC wet well (b)	KC wet well (b)
Lab ID:	IK38E	JE01G	KA63F	KK75G/KL08F	KY79A	LV54G	MN63F	NI22F	OC25F	OU11F	QS17G	SQ45F	TV18A	UR61A	WP79G	YI11G
Sample Type:	Sed. Trap	Sed. Trap	Sed. Trap	Sed. Trap	Sed. Trap	Sed. Trap	Sed. Trap	Sed. Trap	Sed. Trap	Sed. Trap	Sed. Trap	Sed. Trap	Sed. Trap	Grab (b)	Grab (b)	Grab (b)
Date Deployed:	3/8/2005	8/11/2005	3/16/2006	10/11/2006	1/8/2007	5/14/2007	10/29/2007	3/18/2008	7/30/2008	12/3/2008	4/6/2009	11/12/2010	4/5/2011	n/a (b)	n/a	n/a
Date Collected:	8/11/2005	3/16/2006	10/11/2006	1/8/2007	5/14/2007	10/29/2007	3/18/2008	7/30/2008	12/3/2008	4/6/2009	4/8/2010	4/5/2011	11/3/2011	4/24/2012	5/13/2013	04/25/2014
TOTAL METALS (mg/kg-dry)																
(Method 6000-7000 series)																
Arsenic	14	20	20	7 U	20	20	7 U	10	20	10 U	20	14	20	30 U	50 U	30
Copper	113	541	818	103	227	359	76.9	206	316 J	759	248	144	196	283	247	160
Lead	962	233	381	100	194	486	92	172	687 J	257	342	716 J	227 J	270	210	176
Mercury	0.86	0.27	0.4	0.15	0.38	0.4	0.14	0.21	0.58 J	0.42	0.31	0.21 J	0.31 J	0.2	0.28	0.20
Zinc	220	597	945	209	464	781	201	374	691	1000	1,380	356	555	790 J	730	591
NWTPH-Dx (mg/kg)																
Diesel-Range Hydrocarbons	160	1,400	660	340	770	240	86	160	230 J	1,600	400	190	530	480	NA	450
Motor Oil-Range Hydrocarbons	570	7,500	4,800	1,600	6,800	2,300	760	900	1,600 J	5,800	1,600	1,500	2,600	1,900	NA	2,100
PCBs (µg/kg)																
(PSDDA PCB SW8082)																
Aroclor 1016	9.6 U	100 U	100 U	70 U	47 U	30 U	19 U	15 U	49 U	68 U	67 U	20 U	48 U	48 U	49 U	9.6 U
Aroclor 1242	9.6 U	100 U	100 U	70 U	47 U	30 U	19 U	15 U	49 U	68 U	67 U	20 U	48 U	48 U	49 U	9.6 U
Aroclor 1248	9.6 U	100 U	100 U	70 U	47 U	120 U	19 U	75 U	49 U	68 U	200 U	58 U	97 U	58 U	49 U	48 U
Aroclor 1254	72	320	430	86	240	490	85	160	190 J	130	270	240	260	260	280	230
Aroclor 1260	34	330	170	70 U	150	180	36	48	120 J	68 U	170	92	110	150	110	98
Aroclor 1221	9.6 U	100 U	100 U	70 U	47 U	30 U	19 U	15 U	49 U	68 U	67 U	20 U	48 U	48 U	49 U	9.6 U
Aroclor 1232	9.6 U	100 U	100 U	70 U	47 U	30 U	19 U	15 U	49 U	68 U	67 U	20 U	48 U	48 U	49 U	9.6 U
Aroclor 1262	NA	NA	NA	NA	NA	NA	NA	15 U	NA	NA	NA	NA	NA	48 U	49 U	9.6 U
Aroclor 1268	NA	NA	NA	NA	NA	NA	NA	15 U	NA	NA	NA	NA	NA	NA	NA	NA
Total PCBs	106	650	600	86	390	670	121	208 *	310	130	440	332	370	410	390	328
CONVENTIONAL PARAMETERS (%)																
Total Solids (EPA 160.3) (%)	NA	50.80 J	39.20	69.90	45.40	40.20	74.40	40.70	49.80	41.70	29.50	54.90	35.70	13.7	29.46	30.77
Total Organic Carbon (Plumb, 1981 and PSEP 1986) (%)	NA	7.62	7.68	4.88 J	8.87	11.8	3.56	NA	13.2	14.9	12.8	10.7	8.98	16.0	12.8	4.86
Reported as Dry Wt	P,S,T,M	P,S,T,M	P,S,T,M	P,S,T,M	P,S,T,M	P,S,T,M	P,S,T,M	M	P,S,T,M	P,S,T,M	P,S,T,M	P,S,T,M	P,S,T,M	P,S,T,M	P,S,T,M	P,S,T,M
Reported as As Received								P,S,T								
Not Analyzed Due to Low Sample Volume																

P=PCBs
S=SVOCs
T=TPH
M=Metals

U = Indicates the compound was not detected at the reported concentration.
UJ = Indicates the compound was not detected; the given reporting limit is an estimate.
J = Indicates the analyte was positively identified; the associated numerical value is the approximate concentration of the analyte in the sample.
P = Indicates the analyte was detected on both chromatographic columns, but the quantified values differ by $\geq$40% RPD with no obvious chromatographic interference.
NA = Not analyzed.

(a) These samples were cross-contaminated during laboratory analysis. Due to limited sample volume, re-extraction and re-analysis could not be performed. As a result, measured PCB concentrations for these two samples are erroneous and are not shown.
(b) Location SL4-T5A was moved from MH178 to the King County bypass line wet well (installed in October 2011) and renamed SL4-T5A(2). SL4-T5A(2) does not have a bracket and Teflon container like the other sediment trap locations; SL4-T5A(2) is sampled by collecting solids from the bottom of the wet well, which collects solids behind a permanent weir. The line was put into service in October 2011, and solids have been accumulating behind the weir since that time.

Note:
The samples listed in this table were collected in coordination with Seattle Public Utilities (SPU). The 2/16/05 samples are grab samples of solids collected from the base of the manhole or catch basin. With the exception of the 2/16/05 grab samples, these sediment trap samples represent a composite of the sediment collected in the sediment trap bottles between the deployment and collection dates.

TABLE 12
STORM DRAIN SEDIMENT TRAP PCB MASS LOADING RATE
NORTH BOEING FIELD

SPU Sample ID	Boeing Manhole No.	Lab ID	Date Deployed	Date Sampled	Mass of Solids after Centrifuging (g)	Rate of Solids Collection (g/day)	Total PCBs (µg/kg)	PCB Mass Loading (µg/day)
SL4-T1	MH422	OC25C	7/30/2008	12/3/2008	58.34	0.46	19,000 *	8.80 *
SL4-T1	MH422	OU11B	12/3/2008	4/6/2009	16.85	0.14	680 *	0.092 *
SL4-T1	MH422	QS17A	4/6/2009	4/8/2010	102.50	0.28	3,950	1.10
SL4-T1	MH422	UR61B	4/5/2011 (a)	4/24/2012	58.43	0.15	620	0.094
SL4-T1	MH422	WP79A	4/24/2012	5/13/2013	45.09	0.12	1,030	0.121
SL4-T1	MH422	YI11A	5/13/2013	4/25/2014	79.59	0.23	1,300	0.298
SL4-T2	MH356	OC25A	7/30/2008	12/3/2008	39.34	0.31	10 *	0.003 *
SL4-T2	MH356	OU11A	12/3/2008	4/6/2009	8.05	0.06	48 *	0.003 *
SL4-T2	MH356	QS17B	4/6/2009	4/8/2010	65.70	0.18	460	0.082
SL4-T2	MH356	UR61C	4/5/2011 (a)	4/24/2012	107.66	0.28	750	0.210
SL4-T2	MH356	WP79B	4/24/2012	5/13/2013	188.89	0.49	440	0.216
SL4-T2	MH356	YI11B	5/13/2013	4/25/2014	168.43	0.49	620	0.301
SL4-T3	MH364	OC25B	7/30/2008	12/3/2008	36.91	0.29	26 *	0.008 *
SL4-T3	MH364	OU11D	12/3/2008	4/6/2009	15.02	0.12	28 *	0.003 *
SL4-T3	MH364	QS17C	4/6/2009	4/8/2010	92.90	0.25	250	0.063
SL4-T3	MH364	UR61D	4/5/2011 (a)	4/24/2012	97.64	0.25	700	0.178
SL4-T3	MH364	WP79C	4/24/2012	5/13/2013	224.83	0.59	320	0.187
SL4-T3	MH364	YI11C	5/13/2013	4/25/2014	274.43	0.79	570	0.451
SL4-T4	MH221A	OC25E	7/30/2008	12/3/2008	36.00	0.29	240 *	0.069 *
SL4-T4	MH221A	OU11E	12/3/2008	4/6/2009	35.14	0.28	340 *	0.096 *
SL4-T4	MH221A	QS17D	4/6/2009	4/8/2010	128.20	0.35	1070	0.374
SL4-T4	MH221A	UR61F	4/5/2011 (a)	4/24/2012	86.55	0.22	1380	0.310
SL4-T4	MH221A	WP79E	4/24/2012	5/13/2013	83.03	0.22	810	0.175
SL4-T4	MH221A	YI11D	5/13/2013	4/25/2014	100.87	0.29	1490	0.433
SL4-T4A	MH229A	OC25G	7/30/2008	12/3/2008	52.42	0.42	11 *U	0.005 *U
SL4-T4A	MH229A	OU11G	12/3/2008	4/6/2009	32.17	0.26	10 *U	0.003 *U
SL4-T4A	MH229A	QS17F	4/6/2009	4/8/2010	951.80	2.59	680	1.76
SL4-T4A	MH229A	UR61G	4/5/2011 (a)	4/24/2012	71.82	0.19	260	0.049
SL4-T4A	MH229A	WP79D	4/24/2012	5/13/2013	76.50	0.20	156	0.031
SL4-T4A	MH229A	YI11E	5/13/2013	4/25/2014	97.10	0.28	240	0.067
SL4-T5	MH363	OC25D	7/30/2008	12/3/2008	146.87	1.17	3,100	3.61
SL4-T5	MH363	OU11C	12/3/2008	4/6/2009	151.94	1.23	2,100	2.57
SL4-T5	MH363	QS17E	4/6/2009	4/8/2010	794.20	2.16	2,550	5.52
SL4-T5	MH363	UR61E	4/5/2011 (a)	4/24/2012	134.85	0.35	3,570	1.25
SL4-T5	MH363	WP79F	4/24/2012	5/13/2013	79.59	0.21	8,040	1.67
SL4-T5	MH363	YI11F	5/13/2013	4/25/2014	131.30	0.38	4,300	1.63
SL4-T5A	MH178	OC25F	7/30/2008	12/3/2008	399.40	3.17	310	0.983
SL4-T5A	MH178	OU11F	12/3/2008	4/6/2009	164.48	1.33	130	0.172
SL4-T5A	MH178	QS17G	4/6/2009	4/8/2010 (a)	117.60	0.32	440	0.141
SL4-T5A(2)	KC wet well	UR61A	n/a	4/24/2012	(b)	(b)	410	(b)
SL4-T5A(2)	KC wet well	WP79G	n/a	5/13/2013	(b)	(b)	390	(b)
SL4-T5A(2)	KC wet well	YI11G	n/a	4/25/2014	(b)	(b)	328	(b)

U = Indicates the compound was not detected at the given limit of quantitation.
* = Indicates PCB concentrations reported "as received," instead of by dry weight.

(a) The sediment trap samples from deployment between 4/9/2010 and 4/5/2011 (11/3/2011 for SL4-T5A) were not weighed by the laboratory after centrifuging. Therefore, PCB loading could not be calculated for that timeframe.

(b) Location SL4-T5A was moved from MH178 to the King County bypass line wet well (installed in October 2011) and renamed SL4-T5A(2). SL4-T5A(2) does not have a bracket and Teflon container like the other sediment trap locations; SL4-T5A(2) is sampled by collecting solids from the bottom of the wet well. Because of the relatively unrestricted sediment trap volume at this location following the change, a loading calculation is not applicable.

TABLE 13
PCB ANALYTICAL RESULTS
CATCH BASIN FILTERED SOLID SAMPLES
NORTH BOEING FIELD

	CB113	CB147	CB159	CB221	CB224	CB225	CB252	CB253	CB254	CB255	CB256	CB257	CB259	CB260
	XY48O	XY48B	XY48A	XY49A	XY49B	XY48P	XY48G	XY48H	XY48I	XY48J	XY48K	XY48L	XY48F	XY48E
Filter Installation Date	1/10/2013	1/10/2013	1/10/2013	7/20/2012	1/10/2013	1/10/2013	1/10/2013	1/10/2013	1/10/2013	1/10/2013	1/10/2013	1/10/2013	1/10/2013	1/10/2013
Sample Collection Date	2/6/2014	2/6/2014	2/6/2014	2/7/2014	2/7/2014	2/6/2014	2/6/2014	2/6/2014	2/6/2014	2/6/2014	2/6/2014	2/6/2014	2/6/2014	2/6/2014
PCBs (mg/kg)														
Method SW8082A														
Aroclor 1016	0.18 U	1.4 U	0.089 U	0.53 U	0.071 U	0.12 U	0.13 U	0.16 U	0.11 U	0.15 U	0.12 U	0.66 U	0.19 U	0.14 U
Aroclor 1242	0.18 U	1.4 U	0.089 U	0.53 U	0.071 U	0.12 U	0.13 U	0.16 U	0.11 U	0.15 U	0.12 U	0.66 U	0.19 U	0.14 U
Aroclor 1248	**1.2**	2.1 U	**3.0**	0.53 U	0.18 U	0.24 U	0.13 U	0.24 U	0.11 U	0.15 U	0.12 U	0.66 U	0.19 U	0.14 U
Aroclor 1254	**3.9**	**19**	**1.6**	**5.0**	**2.5**	**2.9**	**0.99**	**2.1**	**0.91**	**1.0**	**0.74**	**1.1**	**1.4**	**2.8**
Aroclor 1260	**1.1**	**3.6**	**1.8**	**1.1** P	**0.99**	**0.99**	**0.64**	**0.89**	**0.54**	**0.62**	**0.58**	**0.81**	**0.72**	**0.67**
Aroclor 1221	0.18 U	1.4 U	0.089 U	0.53 U	0.071 U	0.12 U	0.13 U	0.16 U	0.11 U	0.15 U	0.12 U	0.66 U	0.19 U	0.14 U
Aroclor 1232	0.18 U	1.4 U	0.089 U	0.53 U	0.071 U	0.12 U	0.13 U	0.16 U	0.11 U	0.15 U	0.12 U	0.66 U	0.19 U	0.14 U
Aroclor 1262	0.18 U	1.4 U	0.089 U	0.53 U	0.071 U	0.12 U	0.13 U	0.16 U	0.11 U	0.15 U	0.12 U	0.66 U	0.19 U	0.14 U
Total PCBs	**6.2**	**22.6**	**6.4**	**6.1**	**3.49**	**3.89**	**1.63**	**2.99**	**1.45**	**1.62**	**1.32**	**1.91**	**2.12**	**3.47**

TABLE 13
PCB ANALYTICAL RESULTS
CATCH BASIN FILTERED SOLID SAMPLES
NORTH BOEING FIELD

	CB364A	CB367A	CB370	CB372	CB372A	CB374	CB416	CB417	CB418	CB419	CB448	CB453	CB458	CB487
	XY48Q	XY48R	XY49C	XY49E	XY49F	XY49D	XY49G	XY49H	XY49I	XY49J	XY48C	XY48N	XY48M	XY48D
Filter Installation Date	1/10/2013	1/10/2013	1/10/2013	1/10/2013	1/10/2013	1/10/2013	1/10/2013	1/10/2013	1/10/2013	1/10/2013	1/10/2013	1/10/2013	1/10/2013	1/10/2013
Sample Collection Date	2/7/2014	2/7/2014	2/7/2014	2/7/2014	2/7/2014	2/7/2014	2/7/2014	2/7/2014	2/7/2014	2/7/2014	2/6/2014	2/6/2014	2/6/2014	2/6/2014
PCBs (mg/kg)														
Method SW8082A														
Aroclor 1016	0.094 U	0.12 U	0.12 U	0.12 U	0.11 U	0.16 U	0.13 U	0.15 U	0.11 U	0.10 U	0.086 U	0.14 U	0.033 U	0.16 U
Aroclor 1242	0.094 U	0.12 U	0.12 U	0.12 U	0.11 U	0.16 U	0.13 U	0.15 U	0.11 U	0.10 U	0.086 U	0.14 U	0.033 U	0.16 U
Aroclor 1248	0.14 U	0.12 U	0.18 U	0.12 U	0.22 U	0.16 U	0.13 U	0.15 U	0.11 U	0.10 U	0.13 U	0.27 U	0.050 U	0.24 U
Aroclor 1254	**1.5**	**1.1**	**2.6**	**1.1**	**3.0**	**0.62**	**0.89**	**0.84**	**0.56**	**0.62**	**2.2**	**4.3**	**0.25**	**4.2**
Aroclor 1260	**0.36**	**0.54**	**0.83**	**0.62**	**1.5**	**0.46**	**0.41**	**0.39**	**0.26**	**0.40**	**0.49**	**0.95**	**0.19**	**0.98**
Aroclor 1221	0.094 U	0.12 U	0.12 U	0.12 U	0.11 U	0.16 U	0.13 U	0.15 U	0.11 U	0.10 U	0.086 U	0.14 U	0.033 U	0.16 U
Aroclor 1232	0.094 U	0.12 U	0.12 U	0.12 U	0.11 U	0.16 U	0.13 U	0.15 U	0.11 U	0.10 U	0.086 U	0.14 U	0.033 U	0.16 U
Aroclor 1262	0.094 U	0.12 U	0.12 U	0.12 U	0.11 U	0.16 U	0.13 U	0.15 U	0.11 U	0.10 U	0.086 U	0.14 U	0.033 U	0.16 U
Total PCBs	**1.86**	**1.64**	**3.43**	**1.72**	**4.5**	**1.08**	**1.3**	**1.23**	**0.82**	**1.02**	**2.69**	**5.25**	**0.44**	**5.18**

U = Indicates the compound was not detected at the reported concentration.
P = The analyte was detected on both chromatographic columns but the quantified values differ by 40% RPD with no obvious chromatographic interference. The higher of the two values is reported by the laboratory.
Bold = Detected compound.

APPENDIX A

Year 3 Monitoring (November 1, 2013 through October 31, 2014) and FWAAC Results and Recommendations for NBF LTST System

Memorandum

Date: 19 February 2015

To: Karen Keeley, USEPA

Copies to: Carl Bach, The Boeing Company; and Joe Kalmar, Landau Associates

From: Jon Jones, Michael Stenstrom, and Robert Pitt, NBF Stormwater Expert Panel; jointly with Geosyntec Consultants

Subject: Year 3 Monitoring (November 1, 2013 through October 31, 2014) and Flow-Weighted Average Annual Concentration (FWAAC) Results and Recommendations for North Boeing Field (NBF) Long-Term Stormwater Treatment (LTST) System

---

INTRODUCTION

To protect against sediment recontamination due to PCBs in Slip 4, a Long-Term Stormwater Treatment (LTST) system was installed at the North Boeing Field (NBF) site. The LTST system receives a combination of onsite (NBF) and offsite stormwater discharges, and the treated effluent discharges to Slip 4. The NBF Stormwater Expert Panel (Panel)[1], along with Geosyntec Consultants, established a loading-based yearly average water concentration Interim Goal (IG) for the LTST system of 0.018 µg/L total PCBs for stormwater discharging to Slip 4 (NBF Stormwater Expert Panel and Geosyntec, 2011).

After it was determined that the previous solids concentration-based IG of 100 µg total PCBs per kg solids (100 ppb) (SAIC, 2010) did not account for changes in the NBF storm drain mass solids loading to Slip 4, a static mass balance analysis approach was proposed. This revised mass balance approach uses water quality and flow data from a number of monitoring points in the NBF storm drain system to yield a Flow-Weighted Average Annual Concentration (FWAAC) of PCBs in the water discharging to Slip 4, or an average annual mass load normalized by the total discharge volume. The FWAAC calculation methodology is described in detail in the "Amended Monitoring Approach Recommendations for North Boeing Field Long-Term Stormwater Treatment System" memo (Geosyntec, 2012). This mass balance approach was approved by EPA in January 2012.

---

[1] Jonathan Jones, P.E., D.WRE; Michael Stenstrom, Ph.D., P.E., and Robert Pitt, Ph.D., P.E.

A monitoring approach was proposed to collect data for the FWAAC and was ultimately incorporated into the NBF LTST Sampling and Analysis Plan (SAP) (Landau Associates, 2011) and the Revised Final SAP (Landau Associates, 2012a). Water quality sampling and flow measurement locations were proposed at the Lift Station Inlet Vault (LSIV), the Chitosan-Enhanced Sand Filtration (CESF) system effluent, the North Lateral re-route influent to the Lift Station, and at the Lift Station (LS431) Point of Compliance (POC), as shown in Figure 1. This monitoring plan was approved by EPA on April 10, 2012.

As described in the SAP, the objectives of the field sampling were to gather data to:

1. Assess the LTST system for compliance with the proposed FWAAC IG;
2. Confirm that the data used and the assumptions made to arrive at the proposed FWAAC IG are reasonably conservative and descriptive of site conditions;
3. Confirm that treating non-detect (ND) results as zero (0) concentration values is appropriate; and
4. Accurately characterize the off-site flow from the King County North Lateral Re-route in order to evaluate this load contribution to the Lift Station and LTST system.

The first two years of monitoring have shown that the LTST is in compliance with the IG. The Year 1 (November 11 through October 2012) and Year 2 (November 2012 through October 2013) data, FWAAC results, assumptions, and recommendations were summarized in Appendix A of the Annual Performance Evaluation Report for Year 1 (Landau Associates, 2013) and Year 2 (Landau Associates, 2014b), respectively. These documents were approved by EPA on March 28, 2013 and March 10, 2014 and the reported data and analyses confirmed the previously defined mass balance approach.

The fourth objective listed above was met during Year 1 monitoring (November 2011 through October 2012)[2], as the overall PCBs load to the LTST from the King County North Lateral was not considered to be a large contributor to the total PCBs load. The maximum concentration of PCBs within the King County North Lateral was 0.015 µg/L and PCBs were not detected (limit of quantitation (LOQ) = 0.010 µg/L) in five out of seven monthly events and two out of four

[2] Year 1 monitoring (November 2011 through October 2012) was completed and the results were provided in Appendix A of the "Annual Performance Evaluation Report for Long-Term Stormwater Treatment (2011 – 2012) for North Boeing Field" (Landau Associates, 2013)

storm events. Due to the detected values being below the FWAAC IG and the overall success of the LTST system in meeting the IG, the Year 1 results indicated that diverting re-routed King County North lateral stormwater around the LTST system is not necessary at this time (Landau Associates, 2013b). As a result, sampling at the King County North Lateral was not conducted during Year 2 or Year 3.

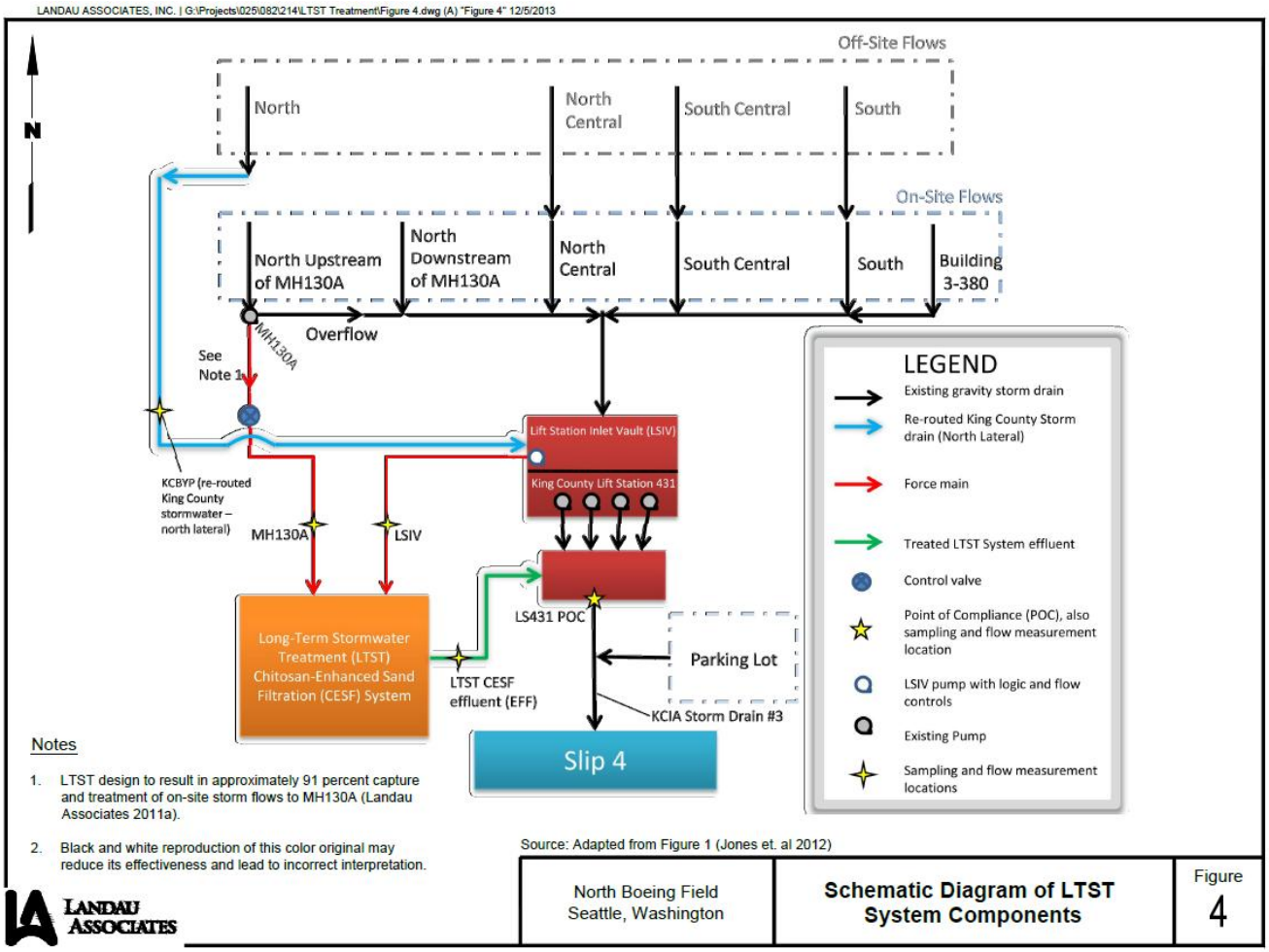

Figure 1. Schematic of flows to Slip 4 (Landau Associates, 2014b)

PURPOSE AND ORGANIZATION

The purpose of this memo is to address the three objectives described above (the fourth objective was addressed earlier as described above, and will not be discussed in this report) using the third year of data collected (November 2013 to October 2014) at NBF. This memo also describes all assumptions made.

The following is an outline of the sections within this memo:

- **Year 3 Data and FWAAC Calculations:** The raw data and calculations/methodology performed as well as the results are presented.
- **Most Sensitive Assumptions:** The assumptions included in this analysis are presented.
- **Discussion and Recommendations:** The results are compared to the monitoring objectives and recommendations are presented if needed for future monitoring.
- **Conclusion:** A summary of the results, discussion, and future actions is presented.

YEAR 3 DATA AND FWAAC CALCULATIONS

Using flow data at the LS431 discharge and whole water quality sampling[3] results, the FWAAC for total PCBs in water being discharged to Slip 4 was calculated to be between 0.0054 µg/L (assuming ND results are zero) and 0.0092 µg/L (assuming ND results are equal to the Limit of Detection [LOD][4]). This entire range is below the FWAAC concentration of 0.018 ug/L. The EPA-approved methodology for calculating the FWAAC specifies that all NDs are assumed to be equal to zero for reporting purposes, and the resulting value of 0.0054 µg/L is 30% of the 0.018 µg/L Interim Goal. Filtered solids and total suspended solids (TSS) data were not used to estimate PCB water concentrations below LODs for ND samples, because of the potential error in this method. Using filtered solids data along with TSS data to determine the concentration of PCBs in water is dependent on the effectiveness of solids capture by the lab (for TSS) and by the field sampler (for the filtered solids samples), and may be more uncertain than a direct measurement. Because of this uncertainty, the calculated PCB concentrations in water using filtered solids data and TSS were not used in the calculation for compliance with the IG, but were used to verify the assumption that ND results can be treated as zero (to assess objective #3). If the ND results are replaced with concentrations calculated from filtered solids and TSS data in the FWAAC calculation, the result is a FWAAC value of 0.0083 µg/L[5], still well below the IG.

---

[3] 'Whole water quality samples' refers to either grab or composite water samples, including all particulate and dissolved fractions contained therein.

[4] The LOD for PCBs in water was assumed to be 0.005 µg/L, which is half of the target limit of quantification (LOQ) (Analytical Resources, 2011). The laboratory has reported PCBs in whole water down to the LOD since December 2012.

[5] Filtered solids data were not available for all grab sample events, therefore all PCB whole water NDs could not be replaced by filtered solids and TSS data for this approximation. If a whole water PCB sample resulted in a ND result and filtered solids data were not available, this concentration result was conservatively removed from the analysis so that the average PCB concentration would not be reduced as a result of the ND value. Additionally, whole water sampling for TSS at the effluent location was discontinued after January 2014. The approximated PCB

Therefore, the ND assumption does not affect the outcome of FWAAC compliance. These calculations are described in more detail below.

The FWAAC calculation methodology begins with analysis of flow monitoring results to determine the percent of total flows discharged at LS431 that were treated by the LTST system. Table 1 compares the predicted, measured, and calculated estimates of stormwater capture by the LTST system as a percent of total runoff volume from the drainage area. The following assumptions were used in these calculations:

- The flow was assumed to be treated if under 1500 gpm. During large events, the flow under 1500 gpm was assumed to be treated and the excess over 1500 gpm was assumed to be untreated, resulting in a blend of fully treated low flow volumes and untreated excess flows during large storms;
- Testing the ND assumption required filtered solids data for each sampled site. Because LS431 filtered solids data were not available, the storm sampled load for this site was calculated as follows:

  $Storm\ Sampled\ Load =$
  $(Baseflow\ x\ Effluent\ PCB\ Conc.) + (Overflow\ x\ LSIV\ PCB\ Conc.)$; and

- Since effluent PCB samples and LSIV PCB samples were sometimes taken one day apart, the date of the LSIV sample was assumed for both to perform the calculation for the storm sampled load.

The Year 1 and Year 2 calculated percent of stormwater treated values were 76% and 70%, respectively; both corresponding to an annual precipitation depth of 37 inches. As is shown in Table 1, Year 3 resulted in 2 additional inches of precipitation, but the LTST was still able to achieve treatment percentages comparable with Year 2.

---

concentrations resulting from filtered solids data collected after January 2014 were therefore calculated assuming a long term average of TSS at the effluent of 2.25 mg/L (calculated from historical sampling results [Landau Associates, 2014a]).

Table 1: Predicted, Observed, and Calculated Values

	Long-Term Predicted[1]	Year 3 Observed[2]	Year 3 Calculated[3]
Precipitation (inches)	36	39	N/A
Total Discharge to Slip 4 (million gallons)[4]	350	290	N/A
Total Treated Stormwater (million gallons)[6]	N/A	190	210
% Stormwater Treated[5]	59%	65%	71%

Notes:
1. Based on long-term continuous simulation of flow conditions using EPA's Stormwater Management Model (SWMM) (Geosyntec, 2011).
2. Year 3 observed values are taken from the Landau Associates September 2014 quarterly progress report (Landau Associates, 2014a) and October 2014 data provided separately by Landau Associates, which include treated flow monitoring data recorded by the CESF system from November 2013 to October 2014.
3. Year 3 calculated values are the result of calculations performed by Geosyntec using LS431 flow meter data provided by Landau Associates between November 2013 and October 2014.
4. Total Discharge to Slip 4 includes stormwater (liquids and dissolved particles) in the form of baseflow, storm event runoff, snow melt runoff and drainage, as well as all solids that enter the storm drainage system.
5. The LTST system receives a combination of flows from the LSIV and the MH130A upstream diversion. Therefore, the percent stormwater treated value represents the overall percentage of all influent flows that are captured and treated. The system captures and treats a much higher percentage of the MH130A flows compared to the flows from the LSIV as documented in the previous annual evaluation reports (Landau Associates, 2013 and Landau Associates, 2014b).
6. The discrepancy between Year 3 observed 'total treated stormwater' and Year 3 calculated 'total treated stormwater' shown in Table 1 is due to the use of two different sources of flow data (Clear Water data versus values calculated by Geosyntec using Flo Dar data and assuming 1500 gpm as a treatment flowrate).

To calculate the FWAAC using whole water samples, recorded flow (summarized in Tables 2 and 3) and water quality data (summarized in Tables 4 through 7) from the quarterly progress reports (Landau Associates, 2014a) were collected and synthesized to develop the total flow volumes and average total PCB concentrations for Year 3. The observed total treated results come from the progress reports, which rely on field measurements from the treatment system operator, Clear Water (CW), at the effluent of the CESF (reported in 15-minute increments). The calculated total treated results rely on evaluating the portion of the Flo Dar data, which reflects total flow measured at the LS431 POC, that are below 1500 gpm (the capacity of the CESF).

The CW data are not provided in a format consistent with the FWAAC methodology; however, an approximate calculation of the FWAAC using these data was performed for comparison purposes. The observed and calculated results were then compared to test the assumption that all flow recorded by the Flo Dar meter below 1500 gpm can be assumed to be treated in calculating the FWAAC. Table 1 shows that the Year 3 CW observed treated flow value (using CW measured data not available in a format consistent with the FWAAC calculation methodology) is

approximately 9% less than the calculated treated flow. To test the FWAAC assumption that all treated flow equals the LS431 flow below 1500 gpm, the 1500 gpm value was adjusted in the FWAAC calculation spreadsheet until the calculated percent treated was equal to the CW observed percent treated. This adjustment resulted in a treated flow rate assumption equal to 1100 gpm and a corresponding FWAAC of 0.0068 µg/L (38% of the IG).[6] The calculated treated flow percentage (assuming all flow under 1500 gpm is treated for purposes of the FWAAC calculation) is therefore not conservative when compared to the observed treated flow percentage; however, given that the FWAAC is still well below the IG when adjusting the calculated treated flow percentage to equal the observed treated flow percentage, this assumption will not be modified at this time. Additionally, as a result of the challenges of accurately measuring flow at LS431, the observed percent treated value may not accurately reflect the actual percent of flows treated on site. This analysis was performed solely to evaluate the sensitivity of the FWAAC calculation to the assumption of what volume of flows are treated, and is not intended to suggest that the actual treatment capacity of the LTST is below 1500 gpm. If future monitoring shows a larger discrepancy between observed and calculated values, the assumption of what percent of flow is treated for purposes of the FWAAC calculation will be revisited. The results using both data sources are shown in Table 8 and explained further below. Additionally, the spreadsheet that contains a summary of these data along with the FWAAC calculation is attached to this submittal as a separate document.

[6] This calculation was performed assuming that ND results were zero.

Table 2: Year 3 Observed and Calculated Monthly Flow Volumes using Only Flo Dar Data (Observed data shown in italics; see following text for flow designation explanations)[7]

Date	Total Flow from Flo Dar (million gallons)	Treated Flow (million gallons)	Untreated Flow (million gallons)	Baseflow (million gallons)	Storm Sampled Flow (million gallons)	Storm Sampled Total PCB Load (µg)[8]	Storm Treated flow (million gallons)	Storm untreated flow (million gallons)
Nov-13	*18*	13	5.2	12	5.4	140,000 – 190,000	0.46	0.64
Dec-13	*10*	10	0.016	9.7	0.0	0.0	0.75	0.016
Jan-14	*24*	16	7.8	12	5.0	170,000 – 190,000	3.16	4.0
Feb-14	*37*	22	15	18	2.9	110,000	3.22	13
Mar-14	*57*	32	25	26	7.3	0.0 – 140,000	5.10	19
Apr-14	*25*	21	4.0	20	1.0	0.0 – 20,000	1.33	3.1
May-14	*24*	19	5.6	18	0.0	0.0	0.70	5.6
Jun-14	*14*	14	0.32	14	0.0	0.0	0.045	0.32
Jul-14	*16*	14	2.0	13	0.0	0.0	0.27	2.0
Aug-14	*15*	12	3.0	11	0.0	0.0	0.39	3.0
Sep-14	*12*	11	0.52	11	0.0	0.0	0.54	0.52
Oct-14	*41*	25	15	19	2.3	190,000	5.79	14
Total	*290*	210	84	180	24	610,000 – 840,000	22	65

[7] Providing all data used in the FWAAC calculation is not possible within this memorandum because the full calculation requires analyzing the data for sampled loads during individual time steps. Therefore, this table represents a summary of the monthly totals that resulted from the full calculation.

[8] If the whole water Total PCB sample result was ND, a range is presented that represents treating the ND result as zero (lower bound) and treating the ND result as the LOD (upper bound).

Table 3: Year 3 Observed and Calculated Monthly Flow Volumes using Flo Dar Data and CW Data for Treated Flow (CW replacement shown shaded blue and observed data shown in italics; see following text for flow designation explanations) [9]

Date	Total Flow from Flo Dar (million gallons)	Treated Flow (million gallons)	Untreated Flow (million gallons)	Baseflow (million gallons)[11]	Storm Sampled Flow (million gallons)	Storm Sampled Total PCB Load (µg)	Storm Treated flow (million gallons) [10]	Storm untreated flow (million gallons)
Nov-13	*18*	12	6.4	12	5.4	140,000 – 190,000	See footnote 11	1.0
Dec-13	*8.8*	8.8	0.0	8.8	0.0	0.0		0.0
Jan-14	*24*	14	9.4	14	5.0	170,000 – 190,000		4.3
Feb-14	*37*	20	17	20	2.9	110,000		14
Mar-14	*57*	29	27	29	7.3	0.0 – 140,000		20
Apr-14	*25*	19	6.4	19	1.0	0.0 – 20,000		5.4
May-14	*24*	17	7.2	17	0.0	0.0		7.2
Jun-14	*14*	13	1.4	13	0.0	0.0		1.4
Jul-14	*16*	15	1.0	15	0.0	0.0		1.0
Aug-14	*15*	12	2.5	12	0.0	0.0		2.5
Sep-14	*14*[11]	10	3.8[12]	10	0.0	0.0		3.8
Oct-14	*41*	21	20	21	2.3	190,000		18
Total	*294*	191	103	191	24	610,000 – 840,000	0.0	79

[9] Providing all data used in the FWAAC calculation is not possible within this memorandum because the full calculation requires analyzing the data for sampled loads during individual time steps. Therefore, this table represents a summary of the monthly totals that resulted from the full calculation.

[10] The CW volume data do not discern between baseflow and storm treated flow, which is required to perform the FWAAC calculations according to the established methodology. The average concentration of PCBs in baseflow and storm treated flow is equal and therefore distinguishing between these two flow designations will not affect the final result. The CW "treated flow" is assumed to be entirely baseflow for calculation purposes.

[11] Estimated based on the August 2014 bypass volume and August and September 2014 precipitation data due to a flow logger malfunction during September.

Table 4. Year 3 Whole Water Sampling Results at the LS431 (Baseflow samples were taken during routine sampling and storm samples were taken during a wet-weather event or during routine sampling that occurred during a wet-weather event with bypass of the LTST system [shown in italics].)

	11/7/2013	**11/18/2013**	**12/2/2013**	**1/8/2014**	**1/11/2014**	**2/17/2014**	**3/5/2014**	**4/8/2014**	**7/7/2014**	**10/6/2014**	**10/14/2014**	**Average**
Total PCBs (µg/L) (baseflow sample)			<0.005						<0.005	<0.005		**<0.005**
Total PCBs (µg/L) (storm sample)	*0.013*	<0.005		*<0.005*	0.012	0.010	<0.005	*<0.005*			0.022	**<0.00963**[1]

[1] Average result is calculated assuming ND results are equal to the Limit of Detection of 0.005.

Table 5. Year 3 Whole Water Sampling Results from MH130A (Baseflow samples were taken during routine sampling and storm samples were taken during a wet-weather event or during routine sampling that occurred during a wet-weather event with bypass of the LTST system [shown in italics])

	11/7/2013	**11/18/2013**	**12/5/2013**	**1/9/2014**	**1/10/2014**	**2/16/2014**	**3/5/2014**	**4/8/2014**	**7/10/2014**	**10/9/2014**	**10/13/2014**	**Average**
Total PCBs (µg/L) (baseflow sample)			0.059	0.045					0.098	0.098		**0.075**
Total PCBs (µg/L) (storm sample)	*0.043*	0.045			0.055	0.063	0.370	*0.100*			0.163	**0.120**

Table 6. Year 3 Whole Water Sampling Results at the LSIV (Baseflow samples were taken during routine sampling and storm samples were taken during a wet-weather event or during routine sampling that occurred during a wet-weather event with bypass of the LTST system [shown in italics])

	11/7/2013	**11/18/2013**	**12/5/2013**	**1/8/2014**	**1/11/2014**	**2/16/2014**	**3/6/2014**	**4/8/2014**	**7/10/2014**	**10/9/2014**	**10/14/2014**	**Average**
Total PCBs (µg/L) (baseflow sample)			<0.005						<0.005	<0.005		**<0.005**
Total PCBs (µg/L) (storm sample)	*0.015*	0.016		*0.036*	0.031	0.030	<0.005	*0.017*			0.032	**<0.023**[1]

1. In order to evaluate the representativeness of this annual data, the flow-weighted average over all three years of monitoring at the LSIV was calculated. This cumulative average is 0.025 µg/L. Because of the small contribution of this portion of the flow to the overall discharge concentration, use of this cumulative three year average does not significantly change the value of the calculated FWAAC.

Table 7. Year 3 Whole Water Sampling Results from the CESF Effluent (Baseflow samples were taken during routine sampling and storm samples were taken during a wet-weather event or during routine sampling that occurred during a wet-weather event with bypass of the LTST system [shown in italics])

	11/7/2013	**11/18/2013**	**12/5/2013**	**1/9/2014**	**1/10/2014**	**2/12/2014**	**2/16/2014**	**3/3/2014**	**3/5/2014**	**4/8/2014**	**5/1/2014**	**6/2/2014**	**7/10/2014**	**8/1/2014**	**9/2/2014**	**10/9/2014**	**10/13/2014**	**Average**
Total PCBs (µg/L) (baseflow sample)			<0.005	<0.005		<0.005		<0.005			<0.005	<0.005	<0.005	<0.005	<0.005	<0.005		**<0.005**
Total PCBs (µg/L) (storm sample)	*<0.005*	<0.005			<0.005		<0.005		<0.005	*<0.005*							<0.005	**<0.005**

In order to calculate PCB loads based on the above concentrations, the corresponding average concentrations were multiplied by the volume from each specific flow designation (based on whether the flow was baseflow or storm flow, treated or untreated, and whether or not the storm flow was sampled). Figure 2 displays a sample of recorded flow at the LS431 POC with the appropriate flow designations shaded. The legend also explains how the concentrations were used with each flow designation and the following discussion explains this relationship in greater detail. It should also be noted that the dramatic increase in flow from approximately 1,500 gpm to greater than 12,000 gpm is a result of the LSIV pump on/off setpoints. For example, when stormwater enters the LSIV and the vault level rises, the first pump to engage would be the pump which conveys stormwater to the LTST system, up to the treatment flowrate (1,500 gpm). If the vault depth continues to rise high enough (during periods of intense precipitation), one of the larger King County pumps in the lift station will then engage and begin bypassing the LTST system. When that occurs the discharge flow measured will increase from the lower flow which is all treated (approximately 1,500 gpm) to the higher flow representing both treated (approximately 1,500 gpm) and untreated (greater than 10,500 gpm) designations.

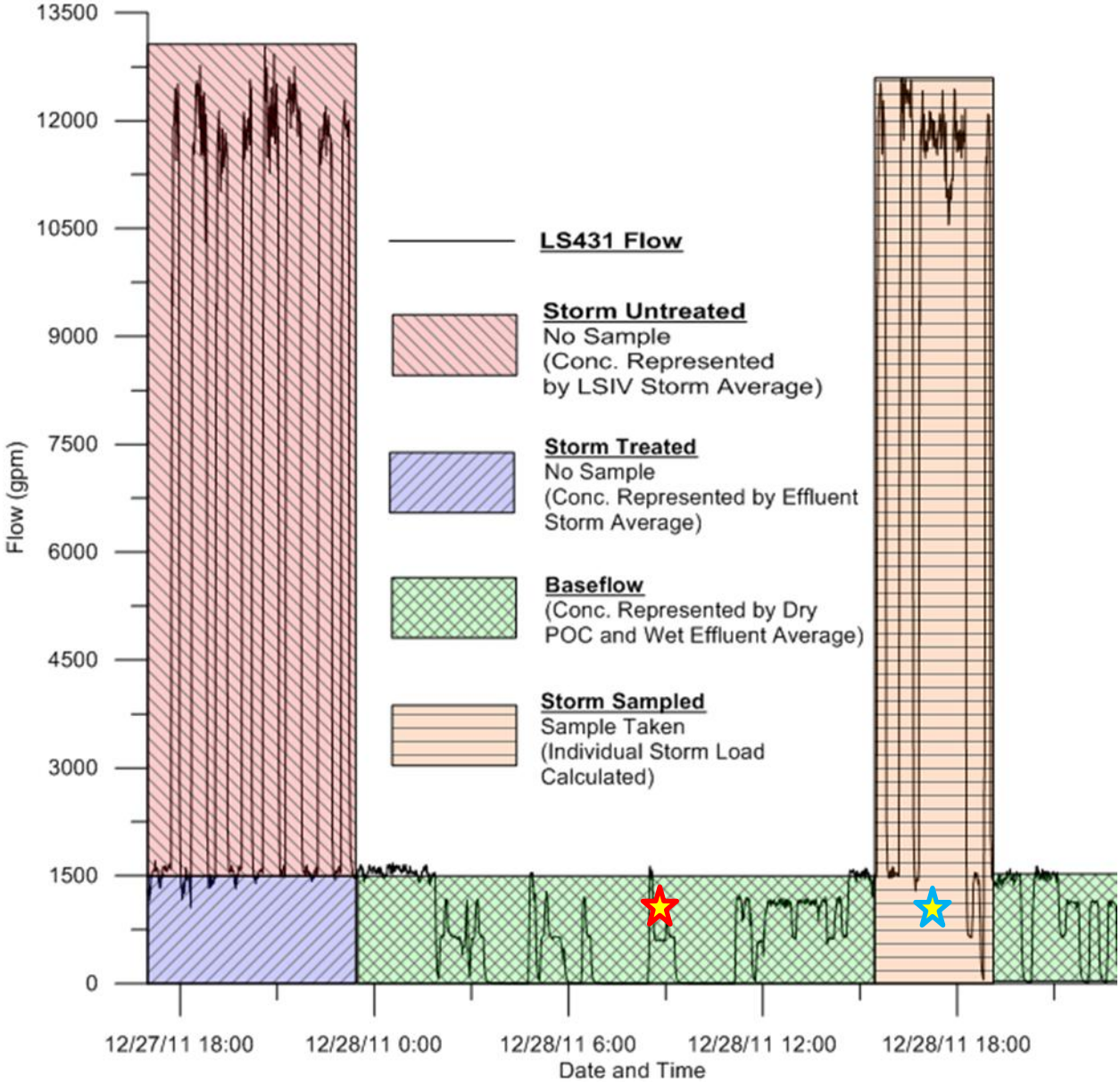

Represents hypothetical "routine" sampling event

Represents hypothetical "storm" sampling event

Figure 2. Observed Flow at the LS431 POC with Flow Designations for the representative time period only (for the purpose of assigning measured PCB concentrations to calculated volume bins in order to calculate the FWAAC)

- **Baseflow**. This represents the PCB load to Slip 4 associated with the volume completely treated by the LTST during dry weather events. The baseflow average total PCB concentration was calculated by averaging the water quality sampling results from the POC during dry weather without any bypass, or, during routine sampling events, from the CESF effluent. Due to the absence of effluent flow measurements with comparable time steps, the baseflow volumes were calculated by summing the recorded flow data that were less than or equal to 1500 gpm (the design capacity of the CESF system).

- **"Storm Sampled**." This represents the PCB load to Slip 4 for storms that were sampled. The storm sampled average total PCB concentration was not used, because each storm sampled was treated as a separate event. The storm sampled flow volumes were calculated by summing the total value of all recorded flow data that exceeded 1500 gpm and coincided with a water quality sampling event. During such an event, the entire volume (above and below 1500 gpm) was used in the summation. The storm sampled load was calculated based on the sampled PCB concentration and coinciding storm volume for each event and then summed for the entire year.

- **"Storm Treated**." This represents the PCB load to Slip 4 for the treated flow (less than 1500 gpm) during an unsampled storm event. The storm treated average total PCB concentration was calculated by averaging the water quality sampling results at the CESF effluent during wet weather events. The storm treated flow volumes were calculated by summing 1500 gpm (the capacity of the CESF system) of each recorded flow during a wet weather event in which a water quality sample was not taken (i.e., 1500 gpm from each flow measurement during an un-sampled storm was summed throughout Year 3.

- **"Storm Untreated**." This represents the PCB load to Slip 4 for the untreated flow (greater than 1500 gpm) during an unsampled storm event. The storm untreated average total PCB concentration was calculated by averaging the water quality sampling results at the LSIV during wet weather. The storm untreated flow volumes were calculated by summing the flow in excess of 1500 gpm of each recorded flow during a wet weather event in which a water quality sample was not taken (i.e., the portion of flow that exceeded 1500 gpm from each flow measurement during an unsampled storm was summed throughout Year 3).

The Year 3 loads were calculated by multiplying the Year 3 average total PCB concentrations by the Year 3 flow volumes (including appropriate unit conversions) for baseflow, storm treated, and storm untreated loads separately. The storm sampled load was calculated as the sum of the

individual loads from each recorded event throughout Year 3 (determined by multiplying the individual event flow volume by the concentration). The total Year 3 PCB load from the site, as shown in Table 8, was calculated to be <11 grams using Flo Dar data and <12 grams using CW data (assuming ND = LOD).

Table 8: Year 3 PCB Loading Calculation Parameters using Whole Water Samples (ND results assumed equal to the LOD)

	Average Total PCB Concentrations [Range if applicable] (µg/L)	Flow Volume (million Liters) [Flo Dar data]	Flow Volume (million Liters) [CW data][1]	Total PCB Load (g) [Flo Dar data]	Total PCB Load (g) [CW data]
Baseflow	<0.0050	690	720	<3.5	<3.6
Storm Sampled	-	91	91	<0.84	<0.84
Storm Treated	<0.0050	82	0	<0.41	0.0
Storm Untreated	<0.023 [<0.0050 - 0.036]	240	300	<5.6	<6.8
Total	-	1,100	1,100	<11	<12

Notes:

1. The CW volume data do not discern between baseflow and storm treated flow, which is required to perform the FWAAC calculations according to the established methodology. The average concentration of PCBs in baseflow and storm treated flow is equal and therefore distinguishing between these two flow designations will not affect the final result. The CW "treated flow" is assumed to be entirely baseflow for calculation purposes.

To better illustrate the flow allocation as shown in Table 8, Figures 3 and 4 represent the annual distribution of flows and PCB mass loads using only Flo Dar data, respectively. Figure 3 shows "treated flow" as the summation of baseflow and "storm treated" flow, untreated flow, and storm sampled flow as a combination of treated and untreated wet-weather flow during a sampling event (due to the methodology assumptions, this flow could not be distributed between treated and untreated flow). Figure 4 shows the breakdown of the PCB mass load in stormwater, with the assumption that all ND values are equal to zero.

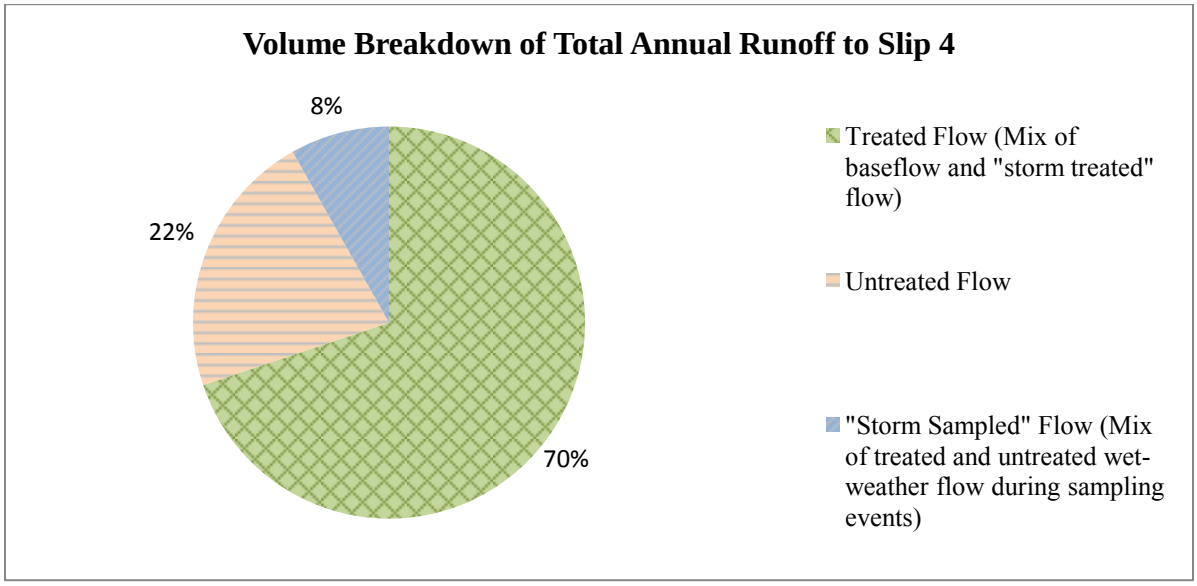

Figure 3. Annual Flow Volume Comparison (see preceding text for flow designation explanations)

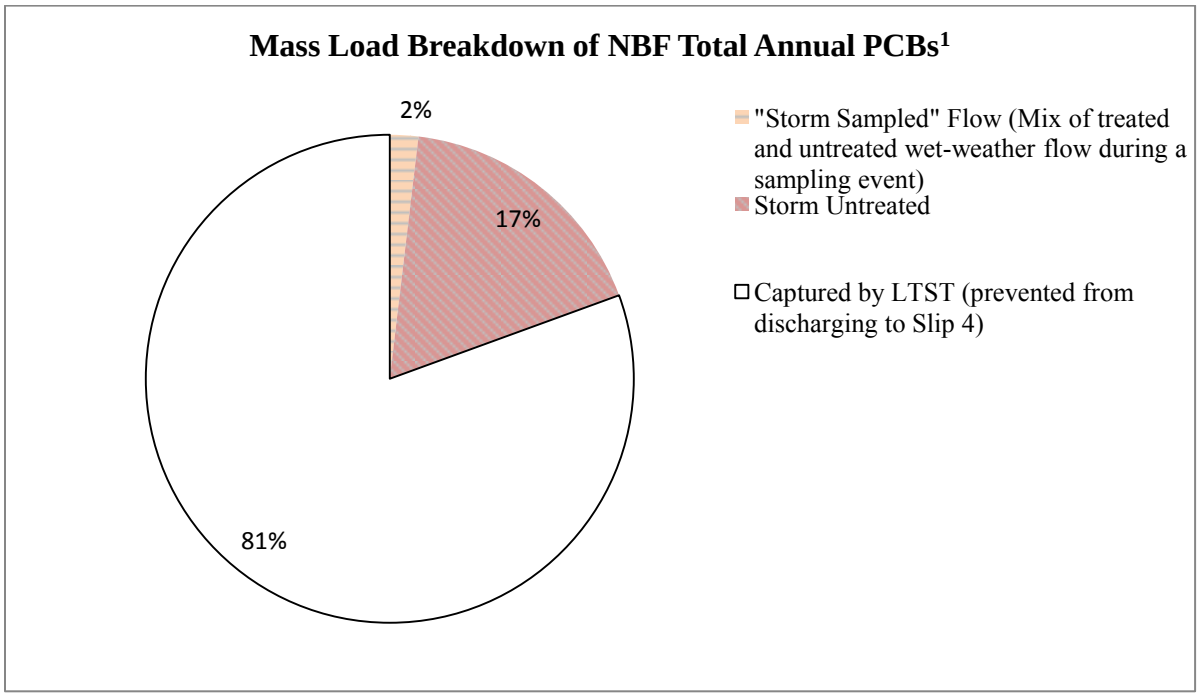

[1] Using the ND=0 assumption, loads from 'baseflow' and 'storm treated' flow are 0.

Figure 4. Annual PCB Mass Load Comparison (ND values assumed equal to zero for reporting purposes; see following text for flow designation explanations)

To further confirm the reported FWAAC value given the uncertainty due to samples with ND results, another ND substitution approach was applied to these samples of total PCB concentrations in water. The PCB concentrations for these samples were estimated using PCB concentrations on filtered solids samples (i.e., µg of total PCBs per g of filtered solids) and TSS concentrations in water (i.e., mg of TSS per L water), the product of which are estimated PCB concentrations in water (i.e., µg of total PCBs per L of water). The concentrations calculated using total PCB filtered solids data and the resulting loads using these concentrations are shown in Table 9.

Table 9: Estimated PCB Loads by Water Volume Type using Filtered Solids and TSS Data. The same results calculated assuming whole water ND results equal to zero and equal to the LOD are provided for comparison.

	Year 3 Average Total PCB Concentrations (µg/L) (filtered solids and TSS data)	Year 3 Total PCB Load (g) (filtered solids and TSS data)	Total Whole Water PCB Load (g) [Flo Dar data] (ND = 0)	Total Whole Water PCB Load (g) [Flo Dar data] (ND = LOD)
Baseflow	0.0024	1.7	0.0	<3.5
Storm Sampled	-	1.5	0.60	<0.84
Storm Treated	0.0010	0.088	0.0	<0.41
Storm Untreated	0.023	5.9	5.4	<5.6
Total	-	9.2	6.0	<10

The loads in Table 9 were calculated using the same methodology previously described (multiplying average concentration by total flow volume, except for the storm sampled load that relies on the summation of individual event loads). The volumes used to calculate the loads using PCB filtered solids are the same as those used in the whole water calculation (Table 8). The total Year 3 PCB load from the site shown in Table 9 was calculated, using filtered solids and TSS data, to be 9.2 grams; this PCB load using filtered solids and TSS data is within 53% of the PCB load estimated assuming ND = 0.

For both scenarios (using whole water samples and filtered solids), the FWAAC was calculated by dividing the sum of all Year 3 loads by the sum of all Year 3 flow volumes. These results are presented in Table 10.

Table 10: Year 3 FWAAC Results

	Interim Goal	Discharge to Slip 4 (Assuming ND = 0) [Flo Dar data]	Discharge to Slip 4 (Assuming ND = LOD) [Flo Dar data]	Discharge to Slip 4 (Using Filtered Solids and TSS Data to Estimate Whole Water PCB Concentrations in ND Samples)
FWAAC (total PCBs)	0.018 µg/L	**0.0054 µg/L [This value is used to determine compliance with the IG]**	0.0092 µg/L	0.0083 µg/L

DISCUSSION AND RECOMMENDATIONS

Year 3 monitoring results are discussed by program objective, as described in this memo's introduction. It should also be noted that, based on the estimated PCB mass load to the LTST system, between 70% (assuming ND = LOD) and 81% (assuming ND = 0) of the total PCB mass load has been captured and is prevented from being discharged to Slip 4. Due to the upstream diversion at MH130A, the LTST system captures and treats a higher percentage of flow from the MH130A line than it does from the LSIV, which includes flows from other stormdrain lines. And because the MH130A average whole water PCB concentration (0.120 µg/L during storms) is much higher than the average whole water PCB concentration in the LSIV (0.023 µg/L during storms), the existing LTST system is able to remove a greater PCB load than it would if it only pumped from the LSIV. The LTST system removed up to 81% of the PCB mass this year, however this result would have been less than the overall volume capture (i.e., <71%) if only treating flow from the LSIV given that LSIV baseflow PCB concentrations (which are fully captured by the LTST system) are less than LSIV stormflow concentrations (which are only partially captured by the LTST system).

Objective #1: Assess the LTST system for compliance with the proposed FWAAC IG

The calculated FWAAC (using the EPA-approved calculation methodology) at the POC over the reporting period (November 2013 to October 2014) for comparison with the FWAAC IG is 0.0054 µg/L total PCBs (assuming that ND results are equal to zero). For additional comparison, the FWAAC was calculated to be 0.0092 µg/L total PCBs assuming that ND results are equal to the LOD. This result is also below the IG of 0.018 µg/L total PCBs.

Objective #2: Confirm that the data used and the assumptions made to arrive at the proposed FWAAC IG were reasonably conservative and descriptive of site conditions

- **Observed vs. predicted discharge volume.** In Table 1, the 2014 total annual observed discharge volume to Slip 4 (290 million gallons) was less than the long-term average predicted value (350 million gallons), despite measured precipitation of 39 inches, which is 8 percent more than the long-term average predicted value (36 inches). This discrepancy between the discharge volume and precipitation depth may be partly attributed to the difficulties inherent in accurately measuring flow volumes at the Point of Compliance, where the error in measurements is 10% on average. In addition, this comparison indicates that the annual discharge volume assumption that was used to set the FWAAC IG was conservative. Based on this, as well as the FWAAC results and the uncertainty of the feasibility of achieving an accurate recalibration, the Storm Water Management model (SWMM) will not be recalibrated at this time. Total discharged flow will continue to be monitored however.

- **Observed vs. predicted treatment rate.** Table 1 also shows that the observed and calculated 2014 percent stormwater treated (65% and 71%, respectively) are higher than the long-term average predicted value (59%), despite Year 3 being an above average rain year. Therefore, the percent treated assumption used to set the FWAAC IG was conservative.

- **Flow data corrections.** Landau Associates recalibrated the Flo-Dar meter at the POC under high flow conditions during an October 2014 storm event. This calibration resulted in a high-flow correction factor similar to the previous calibration performed, therefore all previously recorded flows are considered to be accurate. Because this calibration occurred at the end of Year 3, this calibration will be evaluated after an additional year of monitoring to determine the need for any additional adjustments to the Flo-Dar meter.

- **Additional Assumptions.** While the results suggest that the LTST treatment capacity assumptions made to arrive at the proposed FWAAC IG were reasonably conservative and descriptive of site conditions, additional assumptions, such as the assumption that bedload solids constitute a very small percentage of the total transported solids mass in the storm drain system, cannot be verified at this time. Expected bedload at the POC is expected to be small for several reasons, including the very flat stormdrain network profile (i.e., velocities are low, minimizing shear stresses that would foster bedload transport, with some sections of pipe possibly even being net depositional due to backwater), most or all of the upstream bedload being captured in the LSIV, and

discharge samples at the POC being very well mixed because of the upstream pumps (from the LSIV and LTST).

Objective #3: Confirm that treating ND values as zero is appropriate

The calculated FWAAC using filtered solids data in conjunction with TSS data to estimate whole water samples that had ND results (FWAAC = 0.0083 µg/L total PCBs) is higher than the FWAAC calculated assuming ND results are zero (0.0054 µg/L total PCBs). However, the difference between these two estimates is small compared to the established IG (0.018 µg/L total PCBs), and therefore this assumption is assumed to be adequate. In addition, the FWAAC calculated assuming ND results are equal to the LOD (0.0092 µg/L) is still below the IG. These findings indicate that the range of possible FWAAC results is still below the FWAAC IG, even when assuming that ND results are close to the LOD (0.005 µg/L). This is consistent with the Year 1 and Year 2 findings. Based on the results of these three consecutive evaluation periods showing that the range of ND assumptions (from 0 to the LOD) does not affect the outcome with regards to meeting the IG, it is recommended that this objective be considered successfully met and no longer requiring re-evaluation.

CONCLUSION

The monitoring carried out in Year 3 (November 2013 to October 2014) at NBF was successful in obtaining data to evaluate the three monitoring program objectives:

1. The LTST system was in compliance with the FWAAC IG of 0.018 µg/L total PCBs.
2. Verifiable assumptions were confirmed to be reasonably conservative by evaluating the available predicted, observed, and calculated data.
3. Sensitivity analyses also confirmed that using zero as a surrogate for ND results does not result in a calculated FWAAC that is significantly different, in comparison to the IG, than if calculating the FWAAC assuming ND results are equal to the LOD or by replacing ND results with PCB concentrations calculated from PCB filtered solids and TSS data.

It was also concluded that recalibration of the SWMM model is not necessary at this time; however, future recalibration of the flow monitoring equipment is anticipated and results from this calibration will be analyzed after an additional year of monitoring.

These conclusions are consistent with those from Years 1 and 2. **Therefore, 3 years of data further solidify the findings that the LTST is meeting the FWAAC IG and the discharge quantity and quality characterizations assumed in developing the FWAAC IG are appropriate in representing Site conditions.**

The monitoring objectives above will be reevaluated during the following year, with the exception of monitoring objective 3, pending EPA approval of discontinuation of that sensitivity analysis.

REFERENCES

Analytical Resources, Inc., 2011. *Quality Control Criteria for analysis of Aqueous and Tissue Samples for Aroclors (Polychlorinated Biphenyls – PCB): EPA Method 8082B (27 October 2011).*

Geosyntec Consultants, 2012. *Amended Monitoring Approach Recommendations for North Boeing Field Long-Term Stormwater Treatment System (10 January 2012).*

Geosyntec Consultants, 2011. *Addendum to Removal Action Work Plan: Long-Term Stormwater Treatment (26 January 2011)*. March.

Landau Associates, 2014a. *Third Quarter 2014 Progress Report North Boeing Field Stormwater Treatment Lower Duwamish Waterway Superfund Site EPA Docket No. CERCLA-10-2010-0242 (6 October 2014).*

Landau Associates, 2014b. *Annual Performance Evaluation Report for Long-Term Stormwater Treatment (2012 – 2013) for North Boeing Field.* Prepared for the Boeing Company, March.

Landau Associates, 2013. *Annual Performance Evaluation Report for Long-Term Stormwater Treatment (2011 – 2012) for North Boeing Field.* Prepared for the Boeing Company, March.

Landau Associates, 2012. *Sampling and Analysis Plan, Long-Term Stormwater Treatment, North Boeing Field, Seattle, Washington*. March.

Landau Associates, 2011. *Sampling and Analysis Plan, Long-Term Stormwater Treatment, North Boeing Field, Seattle, Washington*. June.

NBF Stormwater Expert Panel and Geosyntec, 2011. *Alternative Interim Goal Recommendations for Protection of Slip 4 Sediment Recontamination*. October.

SAIC, 2010. *North Boeing Field/Georgetown Steam Plant Site Remedial Investigation/ Feasibility Study – Slip 4 Sediment Recontamination Modeling Report.* September.

* * * * *

APPENDIX B

LTST 2015 Sampling and Analysis Plan Addendum

Sampling and Analysis Plan Addendum
2015 Long-Term Stormwater Treatment
North Boeing Field
Seattle, Washington

February 19, 2015

Prepared for

The Boeing Company
Seattle, Washington

LANDAU ASSOCIATES
130 2nd Avenue South
Edmonds, WA 98020
(425) 778-0907

TITLE AND APPROVAL SHEET

SAMPLING AND ANALYSIS PLAN ADDENDUM
2015 LONG-TERM STORMWATER TREATMENT

NORTH BOEING FIELD, SEATTLE, WASHINGTON

Quality Assurance Project Plan Approvals

EPA Project Manager:	Karen Keeley	Karen Keeley	Date: 2-24-15
EPA QA Manager:	Ginna Grepo-Grove		Date: 2-24-15
Boeing Project Manager:	Carl Bach	Carl Bach Digitally signed by carl m bach@boeing.com DN: cn=carl.m.bach@boeing.com Date: 2015.02.19 07:36:32 -08'00'	Date:
Landau Associates Project Manager:	Joe Kalmar	Joe Kalmar	Date: 2/19/2015
Landau Associates Task Manager:	Jon Polka		Date: 2/19/2015
Landau Associates Project QA Coordinator:	Anne Halvorsen	Anne Halvorsen	Date: 2/19/2015
Analytical Resources, Inc. Project Manager:	Kelly Bottem	Kelly Bottem Digitally signed by Kelly Bottem DN: cn=Kelly Bottem, o=Ari Labs, ou=PM, email=kelly@arilabs.com, c=US Date: 2015.02.18 14:04:39 -08'00'	Date:
Analytical Resources, Inc. QA Manager:	Dave Mitchell	Dave Mitchell Digitally signed by Dave Mitchell DN: cn=Dave Mitchell, o=Ari Labs, ou=QA, email=dave@arilabs.com, c=US Date: 2015.02.18 14:05:47 -08'00'	Date:

TABLE OF CONTENTS

		Page
1.0	INTRODUCTION	1-1
2.0	FIELD SAMPLING PLAN	2-1
2.1	SAMPLING LOCATIONS	2-1
2.2	LIFT STATION (LS431) SAMPLING	2-2
2.3	LONG-TERM STORMWATER TREATMENT SYSTEM SAMPLING	2-3
2.3.1	MH130A Whole Water	2-3
2.3.2	MH130A Filtered Solids	2-4
2.3.3	LSIV Whole Water	2-4
2.3.4	LSIV Filtered Solids	2-5
2.3.5	Effluent Whole Water	2-5
2.3.6	Effluent Filtered Solids	2-6
2.4	SEDIMENT TRAPS	2-6
2.5	WEIR TANK, STORAGE TANK, AND SANDFILTER MEDIA SAMPLING	2-6
2.6	RE-ROUTED KING COUNTY STORMWATER	2-7
3.0	QUALITY ASSURANCE PROJECT PLAN	3-1
4.0	DATA ANALYSIS AND REPORTING	4-1
5.0	REFERENCES	5-1

FIGURES

Figure	Title
1	Vicinity Map
2	Storm Drain System and LTST Sampling Locations
3	LTST Sampling Locations

TABLES

Table	Title
1	2015 Long-Term Removal Action Sampling and Analysis Summary
2	Revised Analytical Methods and Target Limits of Quantitation
3	Revised Sample Containers, Preservatives, and Holding Time Requirements
4	2015 Report Submittal Schedule

ATTACHMENTS

Attachment	Title
1	Quality Control Criteria for Analysis of Aqueous and Tissue Samples for Aroclors (Polychlorinated Biphenyls – PCB) EPA Method 8082B

LIST OF ABBREVIATIONS AND ACRONYMS

µg/L	Micrograms per Liter
ARI	Analytical Resources, Inc.
Boeing	The Boeing Company
CESF	Chitosan-Enhanced Sand Filtration
EAA	Early Action Area
Ecology	Washington State Department of Ecology
EPA	U.S. Environmental Protection Agency
FS	Feasibility Study
FWAAC	Flow-Weighted Average Annual Concentration
GTSP	Georgetown Steam Plant
ISGP	Industrial Stormwater General Permit
KBFI	Seattle Boeing Field-King County International Airport Rain Gauge
KCBYP	Re-routed North Lateral Storm Drain Pipe from King County
LDW	Lower Duwamish Waterway
LOD	Limit of Detection
LOQ	Limit of Quantitation
LSIV	Lift Station Inlet Vault
LTST	Long-Term Stormwater Treatment
MBPS	Media Bed Pilot Study
mg/L	milligrams per liter
NBF	North Boeing Field
NPDES	National Pollutant Discharge Elimination System
PAHs	Polycyclic Aromatic Hydrocarbons
PCBs	Polychlorinated Biphenyls
POC	Point of Compliance
PSD	Particle Size Distribution
PSEP	Puget Sound Estuary Protocols
QAPP	Quality Assurance Project Plan
RI	Remedial Investigation
SAP	Sampling and Analysis Plan
SPU	Seattle Public Utilities
SU	Standard Units
SVOCs	Semivolatile Organic Compounds
TOC	Total Organic Carbon
TSS	Total Suspended Solids

1.0 INTRODUCTION

This document presents modifications to the stormwater monitoring program for operation of the long-term stormwater treatment (LTST) system at the North Boeing Field (NBF) site in Seattle, Washington (Figure 1) beginning 2015. This document is to be used as an addendum to the existing sampling and analysis plan (SAP; Landau Associates 2012) for monitoring during the fourth year of LTST operation, from November 1, 2014 to October 31, 2015, and will replace the 2014 SAP Addendum (Landau Associates 2014), which will no longer be followed. The LTST system, which consists primarily of a chitosan-enhanced sand filtration (CESF) system to remove total suspended solids (TSS) and associated polychlorinated biphenyls (PCBs) from stormwater, was installed as part of a removal action conducted by The Boeing Company (Boeing) at NBF to control contaminant discharges from the NBF site to the Slip 4 Early Action Area (EAA) of the Lower Duwamish Waterway (LDW) Superfund Site.

The primary purpose of the NBF stormwater monitoring program is to determine if the LTST system is meeting the following interim goals at the point of compliance (POC):

- Water discharged to Slip 4 must be below the Aquatic Life – Marine/Chronic water quality standard of 0.030 micrograms per liter (µg/L) total PCBs.
- A flow-weighted average annual concentration (FWAAC) for total PCBs in water to remain at or below 0.018 µg/L.

The latter is referred to as the alternative interim goal, which was approved by the U.S. Environmental Protection Agency (EPA) in place of an interim goal for solids (EPA 2011).

A goal of previous years' monitoring programs has been to collect data to support the NBF – Georgetown Steam Plant (GTSP) Remedial Investigation (RI)/Feasibility Study (FS) being conducted by the Washington State Department of Ecology (Ecology). Now that 3 years worth of monitoring data have been collected, we will discontinue sampling whole water at LS431, MH130A, and the Lift Station Inlet Vault (LSIV) for analysis of semivolatile organic compounds (SVOCs); polycyclic aromatic hydrocarbons (PAHs); and metals (arsenic, cadmium, chromium, copper, lead, mercury, nickel, and zinc), with the exception of copper and zinc, which will continue to be monitored to comply with the National Pollutant Discharge Elimination System (NPDES) stormwater permit at NBF, covered under Ecology's Industrial Stormwater General Permit (ISGP), No. WAR000226. If any data gaps are identified during the RI process, additional sampling and analysis of the aforementioned constituents could be conducted.

Performance monitoring has been conducted for the first 3 years of LTST system operation, between November 1, 2011 and October 31, 2014. The modifications to the SAP presented in this document are a result of evaluations of data and methodologies from the first 3 years of LTST operation and monitoring. This document does not restate information in the existing SAP, but describes changes for the 2015 monitoring program. The existing SAP and this SAP addendum are to be used when conducting LTST monitoring activities at NBF.

2.0 FIELD SAMPLING PLAN

Changes to the monitoring program from the SAP (Landau Associates 2012) are described in the sections below. Aspects of the monitoring program that are not discussed in this Field Sampling Plan will remain as they are described in the SAP. Similar to previous years, the sampling described below will be primarily conducted to support the annual LTST performance evaluation for the period from November (2014) through October (2015), and Boeing will present any proposed modifications to the stormwater monitoring program to EPA for 2016 after the sampling for the 2014-2015 monitoring year is complete and the data have been evaluated.

All laboratory analysis described in the SAP and this SAP addendum will be conducted by Analytical Resources, Inc (ARI), located in Tukwila, Washington. As requested by Ecology (Ecology 2012), Boeing requested that, starting in December 2012, ARI report whole water PCB concentrations down to the ARI Limit of Detection (LOD), which is ½ the target Limit of Quantitation (LOQ). Unless the LOQ is elevated, the LOD would be 0.005 µg/L. This lower reporting level will continue in the 2014-2015 monitoring program. Any result reported below the target LOQ (0.010 µg/L) is approximate and will be J-flagged. Quality control criteria for PCBs analysis in aqueous samples at ARI are included as Attachment 1.

The SAP (Landau Associates 2012) states that each cooler (containing samples) will be secured with a signed custody seal when submitted to the laboratory. However, it is unnecessary to secure a cooler with a custody seal when samples are submitted directly to the laboratory and the laboratory accepts custody of the samples directly from the sampler. Custody seals will only be used when the samples are not actively in the custody of either sampling team or laboratory personnel (e.g., if the cooler is left in an unstaffed drop area).

A 2015 sampling and analysis summary is presented in Table 1. Analytical methods and target LOQs for 2015 are presented in Table 2. Information on sample containers, preservatives, and holding time requirements for 2015 is presented in Table 3.

2.1 SAMPLING LOCATIONS

Samples will continue to be collected from the lift station (LS431) monitoring POC; the LTST system influent (MH130A and LSIV) and effluent; the LTST weir tanks, storage tanks, and sand filters, as necessary; and the sediment traps. The Media Bed Pilot Study (MBPS) and associated sampling were completed in March 2012 and the equipment was removed from the site later that year; there are no plans to continue with additional media bed testing. NBF stormwater-related sampling locations are shown on Figures 2 and 3.

2.2 LIFT STATION (LS431) SAMPLING

Routine sampling events of approximately 3-day duration were originally conducted on a monthly basis according to the SAP (Landau Associates 2012). Beginning in 2014, frequency of routine 3-day sampling events was reduced to quarterly (Landau Associates 2014). Quarterly routine events will continue to be conducted in 2015 during the first month of each calendar quarter (i.e., January, April, July, and October). The 2014-2015 sampling program will also continue to target five storm events of 0.5 inches or greater precipitation in a 24-hour period.

Whole water samples were originally analyzed for particle size distribution (PSD) according to the SAP (Landau Associates 2012). Beginning in 2014, PSD analysis was discontinued (Landau Associates 2014), and no LS431 samples will be analyzed for PSD in 2015. PSD analysis will continue for the sediment trap samples (discussed below in Section 2.4). Continuing with changes implemented in the 2012-2013 monitoring program, to provide compliance monitoring data required by the NPDES stormwater permit at NBF (ISGP, No. WAR000226), LS431 samples will be analyzed quarterly (unless monitoring can be suspended due to consistent attainment of ISGP benchmarks in accordance with permit conditions) for turbidity using EPA Method 180.1, for total copper and total zinc using EPA Method 200.8, and for pH using a calibrated field meter or pH paper with a resolution not greater than ± 0.5 standard units (SU). A quarterly visual observation of the LS431 stormwater sample for oil sheen will also be made, in accordance with permit conditions.

In addition, Ecology reissued the ISGP on December 3, 2014 and this newly revised permit will become effective on January 2, 2015. One of the changes in the reissued permit that will be applicable to NBF is the addition of quarterly TSS monitoring, which is a new requirement for stormwater dischargers to Puget Sound Sediment Cleanup Sites. An associated maximum daily TSS numeric effluent limit [30 milligrams per liter (mg/L)] becomes effective for NBF starting January 1, 2017. TSS analysis has been conducted on all LS431 whole water samples since 2011 according to the SAP (Landau Associates 2012). In 2015, TSS analysis at LS431 will be conducted once per quarter, consistent with the ISGP monitoring requirement. As described in Section 2.3.5 below, TSS analysis of treated effluent samples will be added in order to evaluate ongoing CESF performance in removing TSS. TSS analysis will also continue at the MH130A and LSIV locations as described in Sections 2.3.1 and 2.3.3 below.

According to the SAP (Landau Associates 2012), LS431 whole water samples through the third year of operation have been analyzed for SVOCs, PAHs, and total and dissolved metals to provide information for the NBF – GTSP RI/FS being conducted by Ecology. The 3 years of data that have been collected appear to provide adequate characterization, and we will discontinue sampling whole water at LS431 for analysis of SVOCs; PAHs; and metals (arsenic, cadmium, chromium, copper, lead, mercury,

nickel, and zinc) in 2015, with the exception of total copper and zinc, which will continue to be monitored as required under the ISGP and as described above. If any data gaps are identified during the RI process, additional sampling and analysis of the aforementioned constituents could be conducted.

Because of LTST operational challenges due to dissolved iron and iron-related bacteria growth (e.g., precipitation in monitoring instrumentation and additional sludge volume accumulation in the backflush tank) that are associated with groundwater infiltration into the storm drain lines, LS431 samples were analyzed for total and dissolved iron and manganese using EPA Method 6010, as indicated in the 2012-2013 SAP Addendum (Appendix B of the 2011-2012 Annual report; Landau Associates 2013). Enough data has been collected to assess the issue of iron solids formation, and analysis for iron and manganese will be discontinued in 2015.

The SAP indicates that Seattle Boeing Field-King County International Airport Rain Gauge (KBFI) data will be used to determine how much precipitation fell during a sampling period and whether a storm sampling event meets the precipitation requirement of 0.5 inches or greater. It has been observed that the KBFI rain gauge has a tendency to malfunction in the warmer and drier months. When this occurs, we will instead use data from either the RG16 rain gauge (preferred) owned and monitored by Seattle Public Utilities (SPU) and located just west of East Marginal Way South and next to Slip 4 (data obtained directly from SPU), or from the Seattle-Tacoma International Airport rain gauge identified as KSEA. KSEA precipitation data are available at http://www.wrh.noaa.gov/mesowest/getobext.php?wfo=sew&sid=KSEA.

2.3 LONG-TERM STORMWATER TREATMENT SYSTEM SAMPLING

Continuing with changes made in 2014 (Landau Associates 2014), routine sampling in 2015 at the LTST system will continue to be concurrent with quarterly point of compliance sampling (during the first month of each calendar quarter) at LS431. Changes from the original SAP are discussed in the following sections. Some of the monitoring changes at the LTST system proposed for 2015 are a discontinuation of changes presented in the 2012-2013 and 2014 SAP Addendums (Landau Associates 2013 and 2014).

2.3.1 MH130A WHOLE WATER

MH130A whole water samples have been analyzed for SVOCs, PAHs, and total and dissolved metals during alternating routine quarterly sampling events and alternating storm events since this change was implemented in the 2012-2013 SAP Addendum (Landau Associates 2013). The 2 years of data that have been collected in support of the RI/FS are adequate for site RI purposes, and we will discontinue sampling whole water at MH130A for analysis of SVOCs; PAHs; and metals (arsenic, cadmium,

chromium, copper, lead, mercury, nickel, and zinc) in 2015. MH130A whole water samples will also no longer be analyzed in 2015 for turbidity or total and dissolved iron and manganese as was described in the 2012-2013 SAP Addendum (Landau Associates 2013). Beginning in 2014, PSD analysis was discontinued (Landau Associates 2014), and no MH130A samples will be analyzed for PSD in 2015. PCBs and TSS analysis will continue to be conducted at MH130A during each routine quarterly event and storm event.

2.3.2 MH130A FILTERED SOLIDS

PSD analysis of filtered solids samples was discontinued in June 2012, following approval by EPA. Analysis of filtered solids samples at MH130A for metals has also been discontinued, consistent with the change described in the 2014 SAP Addendum (Landau Associates 2014).

In 3 years of LTST system operation, 46 filtered solids samples have been collected and analyzed for PCBs at MH130A during routine and storm events. These results have not been used to confirm compliance with the interim goals in Section 1.0 or to calculate the FWAAC for PCBs. The filtered solids data that have been collected were initially useful to process and characterize a larger volume of stormwater than that collected during whole water flow-weighted or grab sampling. However, the procedure for collection of filtered solids samples is not a standard method, and whole water sampling is generally a more reliable and accurate monitoring method. Following 3 years of filtered solids sampling, there is minimal benefit to continue to collect filtered solids samples for PCBs or other parameter analysis in the future, and filtered solids sampling will be discontinued at MH130A in 2015.

2.3.3 LSIV WHOLE WATER

For LSIV water samples, because the ISCO autosampler is enabled by the liquid level actuator only when the CESF system is being bypassed, some routine sampling events are likely to result in no collection of a flow-weighted composite LSIV sample. This occurred for multiple routine sampling events during first 3 years of operation. Although a goal of LSIV stormwater sampling is to collect a sample that is representative of water that bypasses the CESF system, another goal is to have adequate LTST system influent water quality data in order to compare to the treated effluent water quality and be able to assess CESF system treatment performance. Therefore, if it is not possible to collect a flow-weighted LSIV sample during a sampling event due to insufficient bypass occurring, then a grab sample of LSIV water will be collected and submitted to the laboratory. A tee and additional sampling port valve were installed at the LSIV sample location so that LSIV sample water can be directed to either the ISCO or out of the new sample port for a grab sample. Logistically, this sampling procedure means waiting

until the end of a routine sampling event to determine if a flow-weighted sample of bypass water can be collected, prior to collecting a LSIV grab sample.

LSIV whole water samples have been analyzed for SVOCs, PAHs, and total and dissolved metals during routine quarterly sampling events and storm events since this change was implemented in the 2012-2013 SAP Addendum (Landau Associates 2013). The 2 years of data that have been collected in support of the RI/FS are adequate, and whole water sampling will be discontinued at LSIV for analysis of SVOCs; PAHs; and metals (arsenic, cadmium, chromium, copper, lead, mercury, nickel, and zinc) in 2015. LSIV whole water samples will also no longer be analyzed in 2015 for turbidity or total and dissolved iron and manganese as was described in the 2012-2013 SAP Addendum (Landau Associates 2013). Beginning in 2014, PSD analysis was discontinued (Landau Associates 2014), and no LSIV samples will be analyzed for PSD in 2015. Analysis for PCBs and TSS will continue to be conducted at LSIV during each routine quarterly event and storm event.

2.3.4 LSIV FILTERED SOLIDS

Filtered solids samples are no longer analyzed for PSD. This change was made in June 2012 and approved by EPA. Continuing with a change described in the 2014 SAP Addendum (Landau Associates 2014), filtered solids samples at LSIV are also no longer collected and analyzed for metals.

In 3 years of LTST system operation, 47 filtered solids samples have been collected and analyzed for PCBs at LSIV during routine and storm events. As was described above in Section 2.3.2, there is considered to be minimal benefit to continue to collect filtered solids samples for PCBs or other parameter analysis in the future, and filtered solids sampling will be discontinued at LSIV in 2015.

2.3.5 EFFLUENT WHOLE WATER

Beginning in 2014, PSD analysis was discontinued (Landau Associates 2014), and no LTST system effluent samples will be analyzed for PSD in 2015. As described in the 2014 SAP Addendum (Landau Associates 2014), routine sampling at the LTST effluent is now conducted quarterly instead of monthly. However, to monitor the efficacy of the CESF system and to be able to respond in a timely manner to any treatment system problems that might arise, samples of LTST system effluent water will be collected monthly during the months when no quarterly sample is collected. These additional grab samples will be collected during the first week of the month. If a storm sampling event is completed during the first week of the month, the additional LTST effluent water sampling would not be necessary and will not be repeated for that month.

TSS analysis of LTST system effluent whole water samples was discontinued in 2014 as described in the 2014 SAP Addendum (Landau Associates 2014). However, we will reintroduce TSS

analysis of LTST system effluent samples in 2015 in order to evaluate ongoing CESF performance in removing TSS. Also, if needed, these TSS data from LSIV and LTST system effluent and flow data from the CESF system and LS431 could be used to estimate TSS at LS431 during sampling events when TSS is not directly measured at LS431. Therefore, all grab samples of the LTST system effluent in 2015 will be analyzed for PCBs and TSS.

2.3.6 EFFLUENT FILTERED SOLIDS

In 3 years of LTST system operation, 44 filtered solids samples have been collected and analyzed for PCBs at the LTST system effluent during routine and storm events. This data is not used to determine compliance with the interim goals in Section 1.0 or to calculate the FWAAC for PCBs. It is, however, used along with TSS data to confirm the appropriateness of the assumption which is used in the FWAAC calculation methodology that says that non-detect results for PCBs in whole water should be treated as zero (instead of as ½ the LOQ or ½ the LOD). For 3 years of LTST system operation, the FWAAC has been well below the alternative interim goal of 0.018 µg/L, and, in all 3 years, the analysis of the FWAAC assumptions has confirmed that treating non-detect results for PCBs in whole water as zero is appropriate. Because of the large number of samples that have already been collected and the relative consistency of the results, continued confirmation of this assumption is no longer considered to be necessary. Therefore, filtered solids sampling will be discontinued at the LTST system effluent in 2015.

2.4 SEDIMENT TRAPS

The applicable method for measuring total organic carbon (TOC) in solids has changed from Plumb 1981 to Puget Sound Estuary Protocols (PSEP) 1986.

2.5 WEIR TANK, STORAGE TANK, AND SANDFILTER MEDIA SAMPLING

When monitoring for depth of sludge in the weir and storage tanks, the existing SAP indicates that, when the solids level at the bottom of the tank is greater than 12 inches for the inlet weir tank or storage tanks, or 24 inches for the backflush settling tank, the solids will be sampled for waste characterization and solids will be cleaned out from the tank. During the first year of operation, it was determined that a deeper blanket of solids could accumulate without negative effects to treatment system operation or performance. A deeper sludge blanket can also promote sludge thickening and limit the volume of water that needs to be removed and processed. Therefore, the solids levels will be allowed to reach up to 3 ft for the inlet weir tank and storage tanks and 5 ft for the backflush settling tank prior to cleanout.

Sampling of the solids from the weir tanks and storage tanks and of the sand filter media does not need to take place each time solids are to be disposed. Previous analytical results from the solids can be used to properly profile the waste if no significant difference in water quality is expected. Sampling and analysis of solids for waste characterization will occur if requested by the disposal facility or as necessary for Boeing to maintain sufficient waste profile information.

For sample collection of weir and storage tank solids, the existing SAP states that a new clean sample jar is to be affixed to the sample pole at each new location. However, the grab samples of solids from a tank are combined and homogenized, so the use of separate clean jars is unnecessary. One new clean sample jar for multiple grabs (in a discrete tank for a discrete sampling event) is sufficient.

2.6 RE-ROUTED KING COUNTY STORMWATER

At the start of LTST operation, Ecology had requested additional sampling of the re-routed King County north lateral stormwater (KCBYP), including filtered solids for PCBs, PAHs, and metals with concurrent whole water sampling for TSS and SVOCs.

The offsite stormwater from the north lateral was rerouted to allow improved capture and preferential treatment of onsite stormwater that drains to MH130A. However, the KCBYP line connects into the LSIV just the same as other NBF storm drain laterals (north central, south central, and south laterals, plus the onsite portion of the north lateral), and this stormwater continues to be treated at the LTST system. There are no current plans to bypass this stormwater from treatment; this stormwater is no different than the other sources of stormwater to LSIV, and there seems to be no useful reason to perform additional sampling at KCBYP beyond the sampling that will continue to be performed at LSIV.

The KCBYP has already been extensively monitored, including seven routine monthly sampling events and four storm sampling events in the first year of LTST operation. Analyses included PCBs, SVOCs, PAHs, total metals, dissolved metals, TSS, and PSD. There continues to be a sediment trap monitoring point for the KCBYP line, location SL4-T5A(2), where solids sample collection will continue to be performed for PCBs; SVOCs; PAHs; metals; petroleum hydrocarbons [total petroleum hydrocarbons-diesel range (NWTPH-Dx)]; TOC; percent total solids; and PSD on an annual basis, in conjunction with the annual sediment trap sampling event. Therefore, no additional whole water or filtered solids sampling is planned for KCBYP beyond the original 2011-2012 monitoring year.

Continuous flow rate monitoring of re-routed stormwater from King County took place through June 2014 at the wet well near the LTST system. EPA approved discontinuation of this flow monitoring in September 2014 (Keeley 2014). Flow rate monitoring of re-routed stormwater from King County will not be conducted in 2015.

3.0 QUALITY ASSURANCE PROJECT PLAN

The Quality Assurance Project Plan (QAPP) portion of the existing SAP (Landau Associates 2012) was reviewed to determine whether there were any items that needed to be revised or updated. The first two paragraphs of Section 3.6 on Data Validation and Usability should be amended to read as follows:

> All stormwater and filtered solids data will be verified and validated to determine the results are acceptable and meet the quality objectives described in Section 3.1. Prior to submitting a laboratory report, the laboratory will verify that all the data are consistent, correct, and complete, with no errors or omissions.
>
> A Stage 2A validation, as defined in EPA's *Guidance for Labeling Externally Validated Laboratory Analytical Data for Superfund Use* (EPA 2009), will be conducted for all data associated with stormwater discharge; data collected for waste characterization (e.g., residual tank solids, used sand filter media) will not be Stage 2A validated. The Stage 2A validation of the data will be performed by Landau Associates following the guidelines in the appropriate sections of the EPA *Contract Laboratory Program National Functional Guidelines for Organic Data Review* (EPA 1999 and 2008) and EPA *Contract Laboratory Program National Functional Guidelines for Inorganic Data Review* (EPA 2004 and 2010) and will include evaluations of the following:…

Also, future data validation reports will include a reference to this SAP addendum.

4.0 DATA ANALYSIS AND REPORTING

When the routine sampling events were reduced from monthly to quarterly, it was not anticipated that the reduction in frequency of routine sampling events would have a significant effect on the FWAAC. However, year-to-date data will continue to be used to regularly calculate an ongoing estimated FWAAC during the fourth year of LTST system operation. If the estimated FWAAC varies significantly from past conditions, or conditions are encountered that vary significantly from typically observed conditions in the first 3 years of LTST system operation, then the monitoring frequency may be increased to verify that there is not an unexpected change in site conditions or LTST system performance. EPA would be informed of any proposed changes in monitoring frequency, and the additional generated data would be provided to EPA in the appropriate reports.

Based on steady operation and performance of the LTST system during the first year of LTST operation and monitoring, and considering that the FWAAC for PCBs at LS431 was well below the established criterion of 0.018 µg/L (calculated to be 0.0011 µg/L), detailed progress reports with stormwater analytical data tables and data validation reports have been provided to EPA quarterly instead of monthly in years two and three of LTST system operation. Brief (approximately one page) progress reports have been provided to EPA for the months in which a quarterly report is not submitted. EPA approved this modification to progress report procedures on January 8, 2013. Quarterly and monthly reports will continue to be submitted on the 5th day of the following month (or the first subsequent work day if the 5th day of the month falls on a weekend or holiday).

An annual LTST performance evaluation report will be prepared for the 2014-2015 LTST monitoring year. A draft version of this report will be submitted by Boeing to EPA by December 7, 2015 for review. Based on results collected during the 2014-2015 LTST monitoring year, there may be a recommendation to change the number of sampling events, sampling locations, or sampling parameters for the fifth year of LTST monitoring. EPA may request a meeting to discuss the results presented in the annual performance evaluation and any recommended modifications to the stormwater monitoring program for 2016. A final version of the annual LTST performance evaluation report will be submitted by Boeing to EPA within 14 working days following receipt of written comments from EPA.

A schedule of report submittals for the 2014-2015 monitoring year is included as Table 4.

* * * * * * *

This document has been prepared under the supervision and direction of the following key staff.

LANDAU ASSOCIATES, INC.

Martin Valeri, E.I.T.
Project Engineer

Joseph A. Kalmar, P.E.
Principal

JAK/MCV/tam

5.0 REFERENCES

Ecology. 2012. *Additional Stormwater Sampling Requested by Ecology – 11/30/2012*. November 30.

Ecology. 1997. *Analytical Methods for Petroleum Hydrocarbons*. Publication No. ECY 97-602. Washington State Department of Ecology. June.

EPA. 2011. Letter: *EPA Approval of Technical Memorandum, Alternative Interim Goal Recommendations for Protection of Slip 4 Sediment Recontamination, North Boeing Field, Seattle, Washington, prepared for The Boeing Company by Geosyntec Consultants and NBF Stormwater Expert Panel, dated December 12, 2011, ASAOC for Removal Action, CERCLA-10-2010-0242*. From Karen Keeley, Project Manager, U.S. Environmental Protection Agency, to Carl Bach, Project Manager, The Boeing Company. December 15.

EPA. 2010. *USEPA Contract Laboratory Program National Functional Guidelines for Inorganic Superfund Data Review.* USEPA-540-R-10-011. U.S. Environmental Protection Agency. Office of Superfund Remediation and Technology Innovation. Washington, D.C. January.

EPA. 2008. *USEPA Contract Laboratory Program National Functional Guidelines for Superfund Organic Methods Data Review.* USEPA-540-R-08-01. U.S. Environmental Protection Agency. Office of Superfund Remediation and Technology Innovation. Washington, D.C. June.

EPA. 2004. *USEPA Contract Laboratory Program National Functional Guidelines for Inorganic Data Review.* EPA-540/R-04-004. U.S. Environmental Protection Agency. Office of Superfund Remediation and Technology Innovation (OSRTI). Washington, D.C. October.

EPA. 1999. *USEPA Contract Laboratory Program National Functional Guidelines for Organic Data Review*. EPA-540/R-99/008. U.S. Environmental Protection Agency. Office of Emergency and Remedial Response. Washington, D.C. October.

EPA. 1986. *Test Methods for Evaluating Solid Waste, Physical/Chemical Methods*. Publication SW-846. U.S. Environmental Protection Agency.

Keeley, K. 2014. Email message from Karen Keeley, Superfund Remedial Project Manager, U.S. Environmental Protection Agency, Region 10, to Joe Kalmar, P.E., Principal, Landau Associates. Re: *RE: NBF – Request to Discontinue Flow Monitoring at King County Stormwater Bypass Line*. September 8.

Landau Associates. 2014. *Sampling and Analysis Plan Addendum, 2014 Long-Term Stormwater Treatment, North Boeing Field, Seattle, Washington*. *Appendix B of the Annual Performance Evaluation Report, Long-Term Stormwater Treatment, 2012-2013, North Boeing Field, Seattle, Washington*. Prepared for The Boeing Company. March 7.

Landau Associates. 2013. *Sampling and Analysis Plan Addendum, 2012-2013 Long-Term Stormwater Treatment, North Boeing Field, Seattle, Washington. (Appendix B of the Annual Performance Evaluation Report, Long-Term Stormwater Treatment, 2011-2012, North Boeing Field, Seattle, Washington*.) Prepared for The Boeing Company. March 28.

Landau Associates. 2012. S*ampling and Analysis Plan, Long-Term Stormwater Treatment, North Boeing Field, Seattle, Washington*. Prepared for The Boeing Company. March 21.

Plumb, R. H., Jr. 1981. "Procedures for handling and chemical analysis of sediment and water samples." Technical Report EPA/CE-81-1. U.S. Army Engineer Waterways Experiment Station, Vicksburg, MS. NTIS No. AD A103 788.

PSEP. 1986. *Recommended Protocols for Measuring Conventional Sediment Variables in Puget Sound*. Prepared by Tetra Tech Inc. for Puget Sound Estuary Program, U.S.Environmental Protection Agency, Region 10, Office of Puget Sound, Seattle, WA. Pp 23-26.

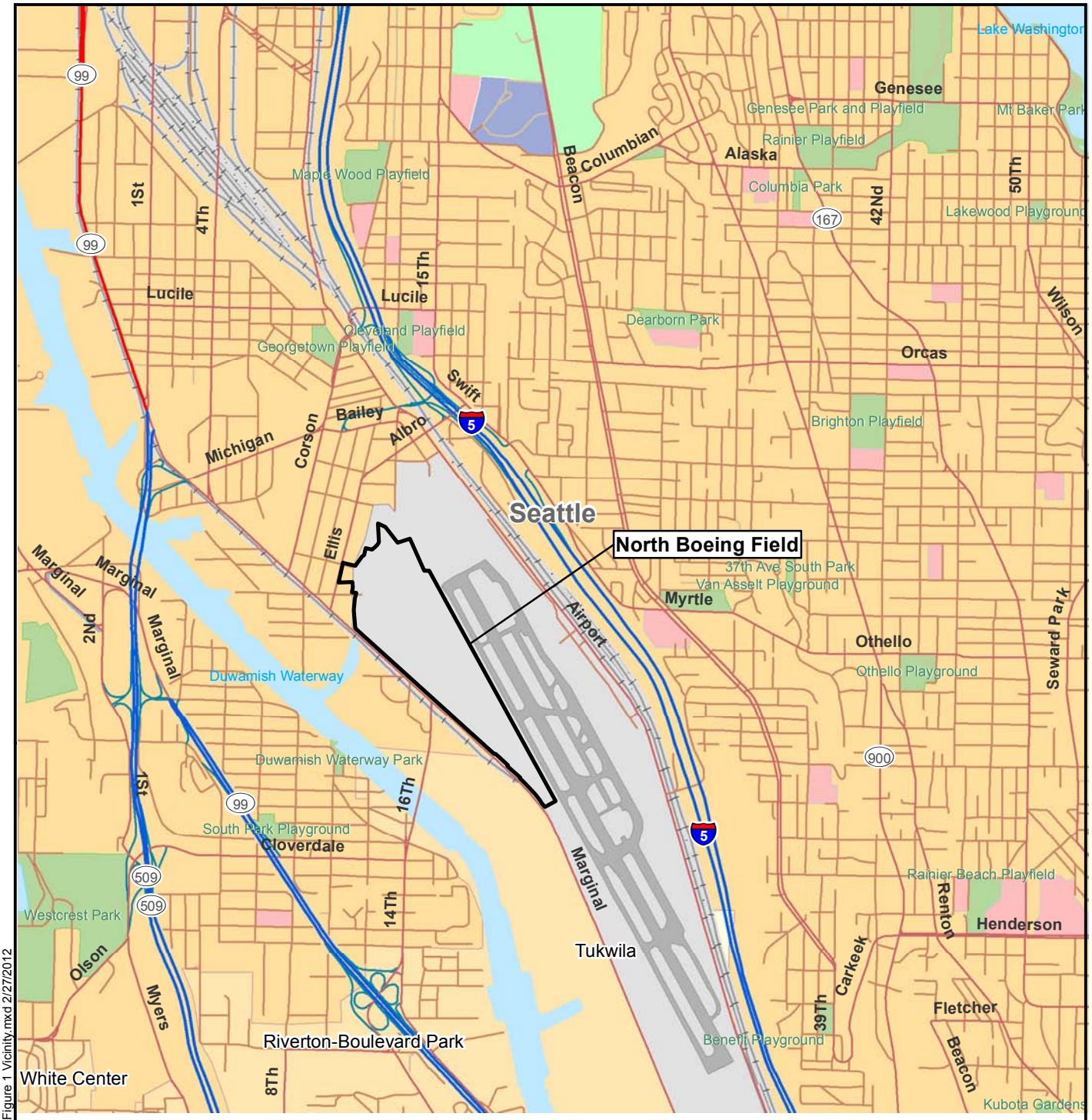

N

0 0.5 1
Miles

Data Source: ESRI 2008

Y:\Projects\025082\MapDocs\311\Completion Report\Figure 1 Vicinity.mxd 2/27/2012

LANDAU ASSOCIATES

North Boeing Field Seattle, Washington	**Vicinity Map**	Figure 1

G:\Projects\025\082\214\LTST Treatment\Figure 2.mxd 12/4/2013 NAD 1983 StatePlane Washington North FIPS 4601 Feet

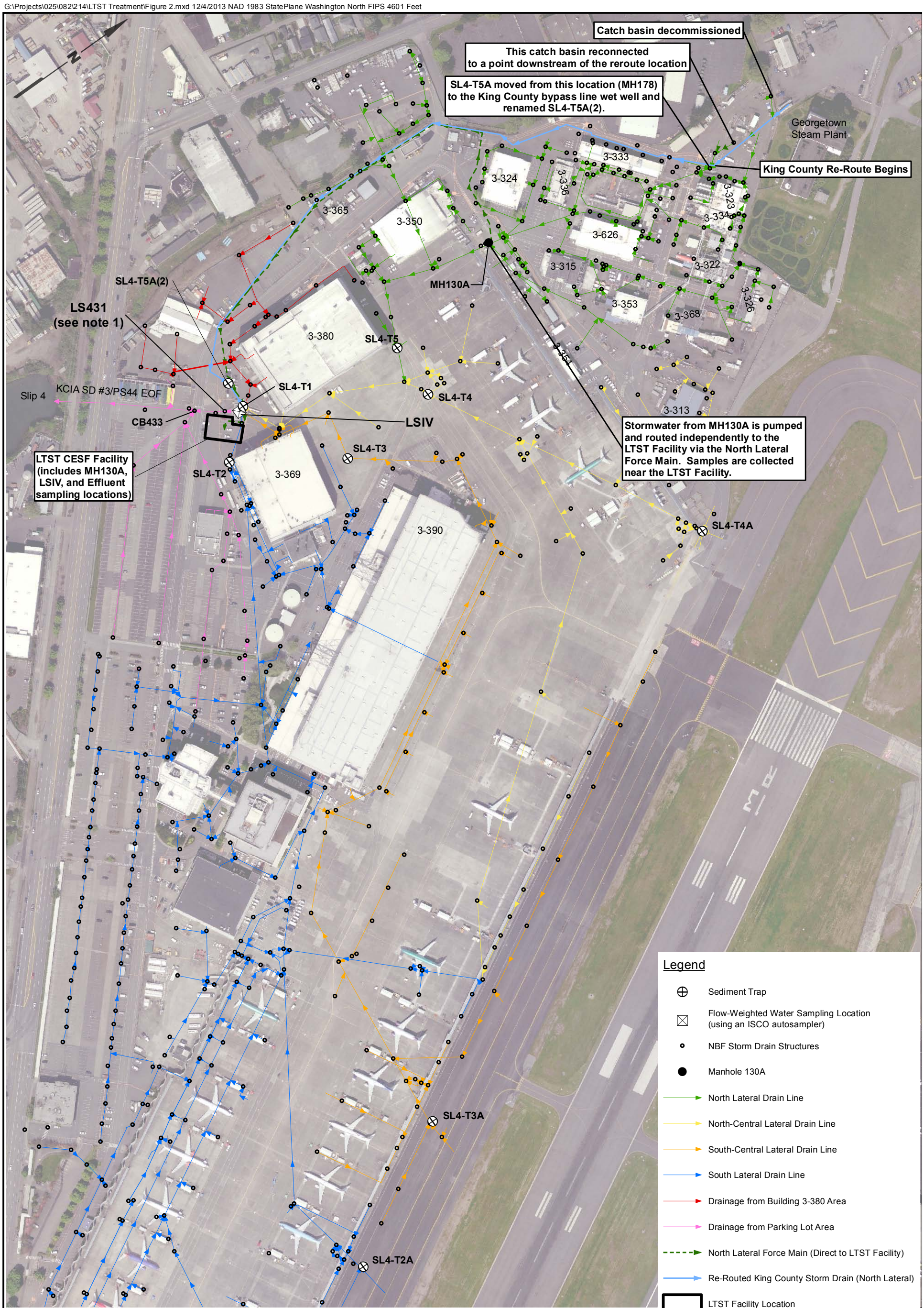

Notes:

1. LS431 is the Point of Compliance (POC).
2. Black and white reproduction of this color original may reduce its effectiveness and lead to incorrect interpretation.

Storm Drain System Data Source: SAIC

0 250 500
Scale in Feet

LANDAU ASSOCIATES

North Boeing Field
Seattle, Washington

Storm Drain System and LTST Sampling Locations

Figure 2

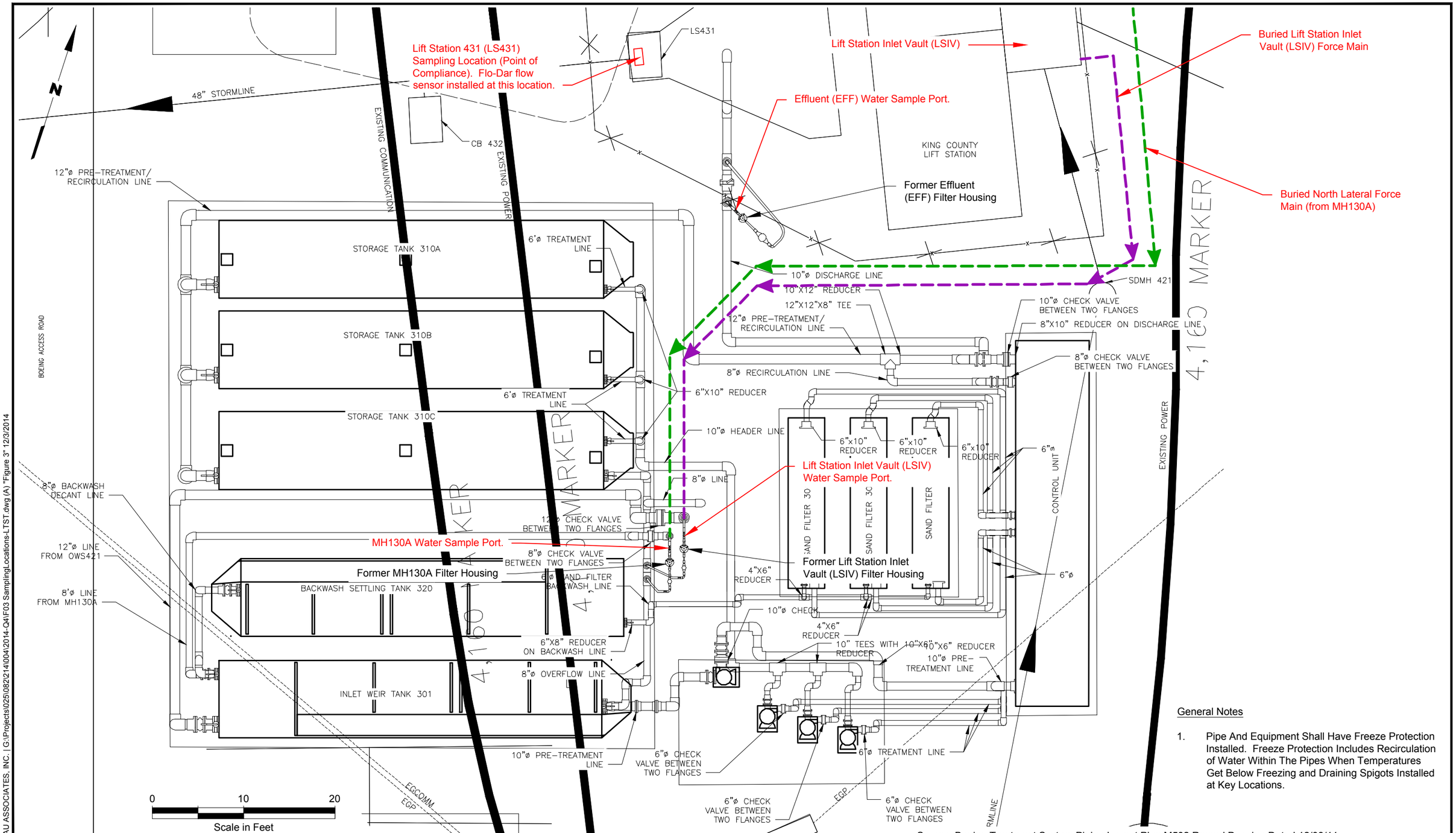

Source: Boeing Treatment System Piping Layout Plan M502 Record Drawing Dated 12/08/11

General Notes

1. Pipe And Equipment Shall Have Freeze Protection Installed. Freeze Protection Includes Recirculation of Water Within The Pipes When Temperatures Get Below Freezing and Draining Spigots Installed at Key Locations.

Note

1. Black and white reproduction of this color original may reduce its effectiveness and lead to incorrect interpretation.

LANDAU ASSOCIATES

North Boeing Field Seattle, Washington	**LTST Sampling Locations**	Figure 3

LANDAU ASSOCIATES, INC. | G:\Projects\025\082\214\0041\2014-Q4\F03 SamplingLocations-LTST.dwg (A) "Figure 3" 12/3/2014

TABLE 1
2015 LONG-TERM REMOVAL ACTION SAMPLING AND ANALYSIS SUMMARY
NORTH BOEING FIELD - SEATTLE, WASHINGTON

Location	Sample Type	Sample Media	Frequency (a)	Parameters	Analytical Methods
Lift Station (LS431) (Compliance Monitoring Point)	Whole Water (flow-weighted composite)	Stormwater (b)	Quarterly routine sampling in 2015; Five additional 24-hour storm events of ≥0.5 inch precipitation, November 1, 2014 - October 31, 2015	PCBs	EPA Method 8082
			Quarterly sampling in 2015	TSS	SM 2540D
				Total Copper and Total Zinc (c)	EPA Method 200.8
				Turbidity (c)	EPA Method 180.1
	Whole Water (grab)			pH (c)	Meter or pH paper
Long-Term Stormwater Treatment System	Whole Water Influent from Lift Station Inlet Vault: Flow-weighted composite of treatment system bypass (preferred) or grab (if insufficient bypass occurs for flow-weighted sample collection)	Stormwater (b)	Quarterly routine sampling (d) in 2015; Five additional 24-hour storm events (d) of ≥0.5 inch precipitation, November 1, 2014 - October 31, 2015	PCBs	EPA Method 8082
				TSS	SM 2540D
	Whole Water Influent from MH130A (grab)	Stormwater (b)	Quarterly routine sampling (d) in 2015; Five additional 24-hour storm events (d) of ≥0.5 inch precipitation, November 1, 2014 - October 31, 2015	PCBs	EPA Method 8082
				TSS	SM 2540D
	Whole Water Effluent (grab)	Stormwater (b)	Five 24-hour storm events (d) of ≥0.5 inch precipitation, November 1, 2014 - October 31, 2015; and monthly sampling (d) in 2015	PCBs	EPA Method 8082
				TSS	SM 2540D
	Whole Water Effluent (grab) (e)	Stormwater (b)	Twice monthly (f)	Residual Chitosan	Ecology approved procedure (g)
Sediment Traps [SL4-T1, SL4-T2, SL4-T3, SL4-T4, SL4-T4A, SL4-T5, SL4-T5A(2) (h)] (SL4-T5A moved from MH178 to King County bypass line wet well)	Annual Composite, Homogenized	Stormwater Solids	Annually (i)	PCBs	PSDDA Method 8082
				SVOCs	PSDDA SVOCS SW8270D
				Total Metals (j)	Method 6000-7000 (j)
				NWTPH-Dx	NWTPH-Dx (with acid silica gel cleanup)
				TOC	PSEP 1986
				Percent Total Solids	EPA 160.3 (modified for solids)
				PSD	PSEP-PS (k)
Weir and Storage Tanks, Sand Filter Media	Composite from 3 or More Grab Samples from Tank or Filter Vessel (grab locations to result in both horizontal and vertical compositing)	Settled Solids	As Needed (l)	PCBs	EPA Method 8082
				SVOCs	EPA Method 8270D
				Metals (m)	TCLP and/or Method 6000-7000 (m)
				Petroleum Hydrocarbons	NWTPH-Dx and NWTPH-Gx

PCBs = polycholorinated biphenyls
TSS = total suspended solids
PSD = particle size distribution
TOC = total organic carbon

SVOCs = semivolatile organic compounds
TCLP = toxicity characteristic leaching procedure
PSDDA = Puget Sound Dredged Disposal Analysis
PSEP = Puget Sound Estuary Protocols
Ecology = Washington State Department of Ecology

EPA = U.S. Environmental Protection Agency
LTST = long-term stormwater treatment
STST = short-term stormwater treatment
O&M = operation and maintenance
CESF = chitosan-enhanced sand filtration

µm = micrometer
NBF = North Boeing Field
NWTPH-Dx = Total Petroleum Hydrocarbons Diesel Range
NWTPH-Gx = Total Petroleum Hydrocarbons Gasoline Range
SM = Standard Method

(a) Monitoring plan beginning November 2014. All sampling and analysis will be performed by Boeing/Landau Associates and Boeing's contract laboratory, unless otherwise noted. Sampling frequency for all analyses is to be determined for sampling starting January 2016. Boeing will propose to EPA a sampling frequency and sampling parameters based on the results from the November 2014 - October 2015 sampling events.
(b) Stormwater is defined as all liquids, including any particles dissolved therein, in the form of base flow, stormwater runoff, snow melt runoff, and drainage, as well as all solids that enter the storm drain system.
(c) Quarterly sampling for total copper and total zinc, turbidity, and pH at LS431 may be suspended due to consistent attainment of Industrial Stormwater General Permit benchmarks, in accordance with permit conditions.
(d) LTST system influent/effluent sampling events will be performed concurrent with lift station (LS431) sampling events unless no LS431 sample is being collected.
(e) Whole water effluent grab samples for Residual Chitosan testing will be collected from the treatment facility effluent sample port by Clear Water Services.
(f) Residual chitosan was never detected in twice monthly effluent samples from the LTST facility in the first 3 years of monitoring, or in weekly effluent samples from the STST facility. There is extremely low probability of chitosan being able to pass through the sand filters.
(g) Per CESF system O&M Manual, Ecology approves procedures for residual chitosan testing for each chitosan distributor. Testing will be conducted in accordance with distributor's approved procedures.
(h) Location SL4-T5A(2) does not have a bracket and Teflon container like other sediment trap locations; SL4-T5A(2) will be sampled by collecting solids from the bottom of the wet well, which collects solids behind a permanent weir.
(i) Depending on the quantity of solids collected in the sediment traps, the laboratory may not be able to analyze all parameters. Laboratory will weigh and report total mass of solids collected per sample location. Analysis of parameters will be prioritized in the order listed. Sediment trap sampling will continue indefinitely until such time that additional data collection is no longer needed to support source control efforts.
(j) Metals As, Cu, Pb, & Zn will be analyzed using EPA Method 6010; Hg will be analyzed using EPA Method 7471.
(k) Particle size distribution for sediment trap solids samples will be conducted using PSEP method. When low volumes of sample are collected, particle size distribution will be accomplished using sedigraph for material less than 62.5 µm.
(l) The thickness of accumulated solids (sludge) in the weir tanks will be checked at least once per month to determine if solids should be removed. Prior to solids removal, a composite sample of the solids will be collected and analyzed for waste characterization purposes. Composite sampling may also be done for used sand filter media prior to disposal. Waste characterization may not be necessary if appropriate prior waste characterization data is available, but would be necessary if contaminant concentrations in the LTST influent change significantly. Sampling and analysis for waste characterization will occur if requested by the disposal facility.
(m) Metals As, Ba, Cd, Cr, Pb, Se, & Ag will be analyzed using EPA Method 6010; Hg will be analyzed using EPA Method 7471; TCLP analysis will be by EPA method 1311.

TABLE 2
REVISED ANALYTICAL METHODS AND TARGET LIMITS OF QUANTITATION
LONG-TERM STORMWATER TREATMENT SAMPLING
NORTH BOEING FIELD - SEATTLE, WASHINGTON

		Target Limits of Quantitation (b)		
		Water	Solids	
			Sediment Traps	Residual Solids
Analyte	Analytical Method (a)	ARI LOQ (c)	ARI LOQ (c)	ARI LOQ (c)
PCBs				
Aroclor 1016	EPA Method 8082 (d)	0.01 µg/L	10 µg/kg	33 µg/kg
Aroclor 1221	EPA Method 8082 (d)	0.01 µg/L	10 µg/kg	33 µg/kg
Aroclor 1232	EPA Method 8082 (d)	0.01 µg/L	10 µg/kg	33 µg/kg
Aroclor 1242	EPA Method 8082 (d)	0.01 µg/L	10 µg/kg	33 µg/kg
Aroclor 1248	EPA Method 8082 (d)	0.01 µg/L	10 µg/kg	33 µg/kg
Aroclor 1254	EPA Method 8082 (d)	0.01 µg/L	10 µg/kg	33 µg/kg
Aroclor 1260	EPA Method 8082 (d)	0.01 µg/L	10 µg/kg	33 µg/kg
Aroclor 1262	EPA Method 8082 (d)	0.01 µg/L	--	--
CONVENTIONALS				
Total Organic Carbon	PSEP 1986	--	0.02 percent	--
Total Suspended Solids	SM 2540D	1 mg/L	--	--
Turbidity	EPA Method 180.1	0.05 NTU	--	--
TOTAL PETROLEUM HYDROCARBONS				
Diesel Range	NWTPH-Dx (e,f)	--	5.0 mg/kg	5.0 mg/kg
Gasoline Range	NWTPH-Gx (e)	--	--	5.0 mg/kg
Motor Oil Range	NWTPH-Dx (e,f)	--	10.0 mg/kg	10.0 mg/kg
METALS				
Arsenic	EPA Method 6010	--	5.0 mg/kg	5.0 mg/kg
Barium	EPA Method 6010	--	--	0.3 mg/kg
Cadmium	EPA Method 6010	--	--	0.2 mg/kg
Chromium	EPA Method 6010	--	--	0.5 mg/kg
Copper	EPA Method 200.8/6010	0.5 µg/L	0.2 mg/kg	--
Lead	EPA Method 6010	--	2.0 mg/kg	2.0 mg/kg
Mercury (total)	EPA Method 7471	--	0.025 mg/kg	0.025 mg/kg
Selenium	EPA Method 6010	--	--	5.0 mg/kg
Silver	EPA Method 6010	--	--	0.3 mg/kg
Zinc	EPA Method 200.8/6010	4.0 µg/L	1.0 mg/kg	--
TCLP METALS				
Arsenic	EPA Method 1311/6010	--	--	0.2 mg/L
Barium	EPA Method 1311/6010	--	--	0.2 mg/L
Cadmium	EPA Method 1311/6010	--	--	0.01 mg/L
Chromium	EPA Method 1311/6010	--	--	0.02 mg/L
Lead	EPA Method 1311/6010	--	--	0.1 mg/L
Mercury	EPA Method 1311/7471	--	--	0.0002 mg/L
Selenium	EPA Method 1311/6010	--	--	0.2 mg/L
Silver	EPA Method 1311/6010	--	--	0.02 mg/L
SEMIVOLATILES				
Phenol	SW 8270D (g)	--	20 µg/kg	67 µg/kg
Bis-(2-Chloroethyl) Ether	SW 8270D	--	--	67 µg/kg
2-Chlorophenol	SW 8270D	--	--	67 µg/kg
1,3-Dichlorobenzene	SW 8270D (g)	--	20 µg/kg	67 µg/kg
1,4-Dichlorobenzene	SW 8270D (g)	--	20 µg/kg	67 µg/kg
Benzyl Alcohol	SW 8270D (g)	--	20 µg/kg	330 µg/kg
1,2-Dichlorobenzene	SW 8270D (g)	--	20 µg/kg	67 µg/kg
2-Methylphenol	SW 8270D (g)	--	20 µg/kg	67 µg/kg
2,2'-Oxybis(1-Chloropropane)	SW 8270D	--	--	67 µg/kg
4-Methylphenol	SW 8270D (g)	--	20 µg/kg	67 µg/kg
N-Nitroso-Di-N-Propylamine	SW 8270D	--	--	67 µg/kg
Hexachloroethane	SW 8270D (g)	--	20 µg/kg	67 µg/kg
Nitrobenzene	SW 8270D	--	--	67 µg/kg
Isophorone	SW 8270D	--	--	67 µg/kg
2-Nitrophenol	SW 8270D	--	--	67 µg/kg
2,4-Dimethylphenol	SW 8270D (g)	--	20 µg/kg	67 µg/kg
Benzoic Acid	SW 8270D (g)	--	100 µg/kg	670 µg/kg
bis(2-Chloroethoxy) Methane	SW 8270D	--	--	67 µg/kg
2,4-Dichlorophenol	SW 8270D	--	--	330 µg/kg

TABLE 2
REVISED ANALYTICAL METHODS AND TARGET LIMITS OF QUANTITATION
LONG-TERM STORMWATER TREATMENT SAMPLING
NORTH BOEING FIELD - SEATTLE, WASHINGTON

Analyte	Analytical Method (a)	Target Limits of Quantitation (b)		
		Water	Solids	
			Sediment Traps	Residual Solids
		ARI LOQ (c)	ARI LOQ (c)	ARI LOQ (c)
SEMIVOLATILES (continued)				
1,2,4-Trichlorobenzene	SW 8270D (g)	--	100 µg/kg	67 µg/kg
Naphthalene	SW 8270D (g)	--	20 µg/kg	67 µg/kg
4-Chloroaniline	SW 8270D	--	--	330 µg/kg
Hexachlorobutadiene	SW 8270D (g)	--	20 µg/kg	67 µg/kg
4-Chloro-3-methylphenol	SW 8270D	--	--	330 µg/kg
1-Methylnaphthalene	SW 8270D (g)	--	20 µg/kg	67 µg/kg
2-Methylnaphthalene	SW 8270D (g)	--	100 µg/kg	67 µg/kg
Hexachlorocyclopentadiene	SW 8270D	--	--	330 µg/kg
2,4,6-Trichlorophenol	SW 8270D	--	--	330 µg/kg
2,4,5-Trichlorophenol	SW 8270D	--	--	330 µg/kg
2-Chloronaphthalene	SW 8270D	--	--	67 µg/kg
2-Nitroaniline	SW 8270D	--	--	330 µg/kg
Dimethylphthalate	SW 8270D (g)	--	100 µg/kg	67 µg/kg
Acenaphthylene	SW 8270D (g)	--	20 µg/kg	67 µg/kg
3-Nitroaniline	SW 8270D	--	--	330 µg/kg
Acenaphthene	SW 8270D (g)	--	100 µg/kg	67 µg/kg
2,4-Dinitrophenol	SW 8270D	--	--	670 µg/kg
4-Nitrophenol	SW 8270D	--	--	330 µg/kg
Dibenzofuran	SW 8270D (g)	--	100 µg/kg	67 µg/kg
2,6-Dinitrotoluene	SW 8270D	--	--	330 µg/kg
2,4-Dinitrotoluene	SW 8270D	--	--	330 µg/kg
Diethylphthalate	SW 8270D (g)	--	100 µg/kg	67 µg/kg
4-Chlorophenyl-phenylether	SW 8270D	--	--	67 µg/kg
Fluorene	SW 8270D (g)	--	20 µg/kg	67 µg/kg
4-Nitroaniline	SW 8270D	--	--	330 µg/kg
4,6-Dinitro-2-Methylphenol	SW 8270D	--	--	670 µg/kg
N-Nitrosodiphenylamine	SW 8270D (g)	--	20 µg/kg	67 µg/kg
4-Bromophenyl-phenylether	SW 8270D	--	--	67 µg/kg
Hexachlorobenzene	SW 8270D (g)	--	20 µg/kg	67 µg/kg
Pentachlorophenol	SW 8270D (g)	--	20 µg/kg	330 µg/kg
Phenanthrene	SW 8270D (g)	--	20 µg/kg	67 µg/kg
Carbazole	SW 8270D	--	--	67 µg/kg
Anthracene	SW 8270D (g)	--	20 µg/kg	67 µg/kg
Di-n-Butylphthalate	SW 8270D (g)	--	20 µg/kg	67 µg/kg
Fluoranthene	SW 8270D (g)	--	20 µg/kg	67 µg/kg
Pyrene	SW 8270D (g)	--	100 µg/kg	67 µg/kg
Butylbenzylphthalate	SW 8270D (g)	--	20 µg/kg	67 µg/kg
3,3'-Dichlorobenzidine	SW 8270D	--	--	330 µg/kg
Benzo(a)anthracene	SW 8270D (g)	--	20 µg/kg	67 µg/kg
bis(2-Ethylhexyl)phthalate	SW 8270D (g)	--	20 µg/kg	67 µg/kg
Chrysene	SW 8270D (g)	--	20 µg/kg	67 µg/kg
Total benzofluoranthenes	SW 8270D (g)	--	20 µg/kg	67 µg/kg
Di-n-Octyl phthalate	SW 8270D (g)	--	20 µg/kg	67 µg/kg
Benzo(a)pyrene	SW 8270D (g)	--	20 µg/kg	67 µg/kg
Indeno(1,2,3-cd)pyrene	SW 8270D (g)	--	20 µg/kg	67 µg/kg
Dibenz(a,h)anthracene	SW 8270D (g)	--	20 µg/kg	67 µg/kg
Benzo(g,h,i)perylene	SW 8270D (g)	--	20 µg/kg	67 µg/kg

ARI = Analytical Resources, Inc.
LOD = Limit of Detection
LOQ = Limit of Quantitation
NTU = Nephelometric Turbidity Units
SM = Standard Method

PCBs - polychlorinated biphenyls
PSDDA = Puget Sound Dredged Disposal Analysis
PSEP = Puget Sound Estuary Protocols
NWTPH-Dx = Total Petroleum Hydrocarbons Diesel Range
NWTPH-Gx = Total Petroleum Hydrocarbons Gasoline Range
TCLP = Toxicity Characteristic Leaching Procedure

µg/L = micrograms per liter
µg/kg = micrograms per kilogram
mg/L = milligrams per liter
mg/kg = milligrams per kilogram
EPA = U.S. Environmental Protection Agency

(a) Analytical methods are from SW-846 (EPA 1986) and updates unless otherwise noted.
(b) LOQ goals are based on current laboratory data. Instances may arise where high sample concentrations, nonhomogeneity of samples, total solids (percent of sample that is solids), or matrix interferences, preclude achieving the desired LOQs.
(c) ARI reporting will be based on the lowest standard on the calibration curve. ARI will report whole water PCB concentrations down to the LOD (½ the target LOQ), and any data below the LOQ will be J-flagged.
(d) Sediment trap solids will be analyzed by PSDDA Method 8082.
(e) Methods NWTPH-Dx and NWTPH-Gx as described in *Analytical Methods for Petroleum Hydrocarbons,* Washington State Department of Ecology, Publication ECY97-602, June 1997 (Ecology 1997)
(f) For NWTPH-Dx analyses, an acid silica gel cleanup will be performed for sediment trap solids, but not for residual solids.
(g) Sediment trap samples will be analyzed by PSDDA Method 8270D.

TABLE 3
REVISED SAMPLE CONTAINERS, PRESERVATIVES, AND HOLDING TIME REQUIREMENTS
LONG-TERM STORMWATER TREATMENT SAMPLING
NORTH BOEING FIELD - SEATTLE, WASHINGTON

Analyte	Analytical Method	LS431 and LTST LSIV Whole Water Composite Samples				LTST Facility Whole Water MH130A/LSIV/Effluent Grab Samples				Sediment Traps				Weir Tank, Backflush Tank, and Sand Filtration Units Residual Solids			
		Volume Required	Container	Preservation	Holding Time	Volume Required	Container	Preservation	Holding Time	Volume Required	Container	Preservation	Holding Time	Volume Required	Container	Preservation	Holding Time
PCBs	EPA 8082/ PSDAA 8082	2L	5-gallon glass carboy	Store cool at 6°C	7 days to extraction, 40 days to analysis	2L	Two 1L Amber Glass	Store cool at 6°C	7 days to extraction, 40 days to analysis	8 oz. (2)	Teflon Bottle or WMG	Store cool at 6°C	14 days to extraction, 40 days to analysis	8 oz.	8 oz. WMG	Store cool at 6°C	14 days to extraction, 40 days to analysis
TSS	SM 2540 D-97	1L		Store cool at 6°C	7 days	1L	1L HDPE	Store cool at 6°C	7 Days	--	--	--	--	--	--	--	--
Total Copper and Total Zinc (LS431 only)	EPA 200.8	500 mL		Store cool at 6°C, Nitric Acid in lab	6 months after preservation in lab	--	--	--	--	--	--	--	--	--	--	--	--
Turbidity (LS431 only)	EPA 180.1 / meter	500 mL		Store cool at 6°C	48 hours	--	--	--	--	--	--	--	--	--	--	--	--
Particle Size Distribution	PSEP-PS	--	--	--	--	--	--	--	--	8 oz. (2)	Teflon Bottle or WMG	Store cool at 6°C	7 days	--	--	--	--
SVOCs	EPA 8270D / PSDDA SW8270D	--	--	--	--	--	--	--	--	8 oz. (2)	Teflon Bottle or WMG	Store cool at 6°C	14 days	8 oz.	8 oz. WMG	Store cool at 6°C	14 days
Diesel-range and motor-oil range petroleum hydrocarbons	NWTPH-Dx	--	--	--	--	--	--	--	--	8 oz. (2)	Teflon Bottle or WMG	Store cool at 6°C	14 days to extraction, 40 days to analysis	8 oz.	8 oz. WMG	Store cool at 6°C	14 days to extraction, 40 days to analysis
Gasoline-Range Petroleum Hydrocarbons	NWTPH-Gx	--	--	--	--	--	--	--	--	--	--	--	--	2 oz.	2 oz. WMGS (1)	Store cool at 6°C	14 days to extraction, 40 days to analysis
Metals	EPA 6010	--	--	--	--	--	--	--	--	4 oz. (2)	Teflon Bottle or WMG	Store cool at 6°C	6 months	--	--	--	--
Mercury	EPA 7471	--	--	--	--	--	--	--	--		Teflon Bottle or WMG	Store cool at 6°C	28 days	--	--	--	--
Total Organic Carbon	PSEP 1986	--	--	--	--	--	--	--	--	4 oz. (2)	Teflon Bottle or WMG	Store cool at 4°C	14 days to extraction, 40 days to analysis	--	--	--	--
TCLP Metals	EPA 6010/7470	--	--	--	--	--	--	--	--	--	--	--	--	8 oz	8 oz. WMG	Store cool at 6°C	28/180 days to TCLP extraction, 28/180 days to analysis (Hg/all other metals)

PCBs = polychlorinated biphenyls
TSS = total suspended solids
SVOCs = semivolatile organic compounds
Hg = mercury
TCLP = Toxicity Characteristic Leachate Procedure
HDPE = High Density Polypropylene
oz. = ounce
C = Centrigrade
m/L = meter per liter

PSDDA = Puget Sound Dredged Disposal Analysis
PSEP = Puget Sound Estuary Protocols
EPA = U.S. Environmental Protection Agency
NWTPH-Dx = Total Petroleum Hydrocarbons Diesel Range
NWTPH-Gx = Total Petroleum Hydrocarbons Gasoline Range
LTST - Long-Term Stormwater Treatment
WMG = wide mouth glass jar
WMGS = wide mouth glass jar with septa lid
LSIV = Lift Station Inlet Vault

Notes:
1. No headspace.
2. Amount of settled solids collected in Teflon bottle is not anticipated to meet required sample volumes. Laboratory will pre-screen samples and cut back on volumes required based on pre-screens. Analysis is prioritized due to limited volume.

TABLE 4
2015 REPORT SUBMITTAL SCHEDULE
LONG-TERM STORMWATER TREATMENT
NORTH BOEING FIELD, SEATTLE, WASHINGTON

Report	Due Date (submittal to EPA)
January 2015 Monthly Progress Report	February 5, 2015
February 2015 Monthly Progress Report	March 5, 2015
1st Quarter 2015 Progress Report	April 6, 2015
April 2015 Monthly Progress Report	May 5, 2015
May 2015 Monthly Progress Report	June 5, 2015
2nd Quarter 2015 Progress Report	July 6, 2015
July 2015 Monthly Progress Report	August 5, 2015
August 2015 Monthly Progress Report	September 8, 2015
3rd Quarter 2015 Progress Report	October 5, 2015
October 2015 Monthly Progress Report	November 5, 2015
Annual LTST Performance Evaluation Report (draft)	December 7, 2015
November 2015 Monthly Progress Report	December 7, 2015
4th Quarter 2015 Progress Report	January 5, 2016
Annual LTST Performance Evaluation Report (final)	14 working days following receipt of written comments from EPA

LTST - Long-Term Stormwater Treatment

EPA = U.S. Environmental Protection Agency

ATTACHMENT 1

Quality Control Criteria for Analysis of Aqueous and Tissue Samples for Aroclors (Polychlorinated Biphenyls – PCB) EPA Method 8082B

Analytical Resources,Incorporated
Analytical Chemists and Consultants

Quality Control Criteria for Analysis of Aqueous and Tissue Samples for Aroclors (Polychlorinated Biphenyls – PCB) EPA Method 8082B

Analysis Code	Extraction	DL[1]	LOD[1]	LOQ[1]	Analyte	Spike Recovery Control Limits (%)[2,3]			RPD[4]
						LCS	MB/LCS Surrogate	Sample Surrogate	
Aqueous Samples (Separatory Funnel Extraction – EPA Method 3510C)									
PCBWSI 01-3018F	500 to 5 mL	0.130 µg/L	0.5 µg/L	1 µg/L	Aroclor 1016	45 – 121	--	--	≤ 40
		0.147 µg/L	0.5 µg/L	1 µg/L	Aroclor 1260	54 – 129	--	--	
		--	--	--	TCMX	--	40 – 118	38 – 118	
		--	--	--	DCBP	--	41 – 111	29 – 118	
PCBWSM 02-3021F	500 to 1 mL	0.0175 µg/L	0.05 µg/L	0.1 µg/L	Aroclor 1016	36 – **100**	--	--	≤ 40
		0.0174 µg/L	0.05 µg/L	0.1 µg/L	Aroclor 1260	41 – 113	--	--	
		--	--	--	TCMX	--	29 – **100**	25 – **100**	
		--	--	--	DCBP	--	39 – 116	**10** – 128	
PCBWLS	1000 to 0.5 mL[5]	0.00248 µg/L	0.005 µg/L	0.01 µg/L	Aroclor 1016	44 – 117	--	--	≤ 40
		0.00276 µg/L	0.005 µg/L	0.01 µg/L	Aroclor 1260	46 – 131	--	--	
		--	--	--	TCMX	--	31 – **100**	21 – **100**	
		--	--	--	DCBP	--	32 – 108	19 – 111	
TCLP Extract (Separatory Funnel Extraction – EPA Method 3510C)									
PCBWST	100 to 10 mL	0.130 µg/L[8]	5 µg/L	10 µg/L	Aroclor 1016	30 – 160	--	--	≤ 40
		0.147 µg/L[8]	5 µg/L	10 µg/L	Aroclor 1260	30 – 160	--	--	
		--	--	--	TCMX	--	30 – 160	30 – 160	
		--	--	--	DCBP	--	30 – 160	30 – 160	
Tissue Samples (Tissuemizer / Blender Extraction – EPA Method 3550C Modified) – Concentrations in µg/kg as received (wet weight)									
PCBUZI 09-3029F	10 g to 5 mL	2.92 µg/kg[6]	25 µg/kg	50 µg/kg	Aroclor 1016	30 – 160			≤ 40
		3.91 µg/kg[6]	25 µg/kg	50 µg/kg	Aroclor 1260	30 – 160			
		--	--	--	TCMX		30 – 160	30 – 160	
		--	--	--	DCBP		30 – 160	30 – 160	
PCBUZM 10-3027F	25 g to 5 mL	2.37 µg/kg[7]	10 µg/kg	20 µg/kg	Aroclor 1016	30 – 160			≤ 40
		1.06 µg/kg[7]	10 µg/kg	20 µg/kg	Aroclor 1260	30 – 160			
		--	--	--	TCMX		30 – 160	30 – 160	
		--	--	--	DCBP		30 – 160	30 – 160	
PCBUZL 11-3030F	25 g to 1 mL	2.37[7] µg/kg	2 µg/kg	4 µg/kg	Aroclor 1016	30 – 160			≤ 40
		1.06[7] µg/kg	2 µg/kg	4 µg/kg	Aroclor 1260	30 – 160			
		--	--	--	TCMX		30 – 160	30 – 160	
		--	--	--	DCBP		30 – 160	30 – 160	

(1) Detection Limit (DL), Limit of Detection (LOD) & Limit of Quantitation (LOQ) are defined in ARI SOP 1018S.
(2) Highlighted control limits (**bold font**) are adjusted from the calculated values to reflect that ARI does not use control limits < 10 for the lower limit or < 100 for the upper limit.
(3) 30 – 160 are default limits used when there is insufficient data to calculate historic control limits
(4) Acceptance criteria for the relative percent difference (RPD) between analytes in replicate analyzes. If C_O and C_D are the concentrations of the original and duplicate respectively then

$$RPD = \frac{|C_O - C_D|}{\frac{C_O + C_D}{2}} x100$$

(5) Low level extraction solvent is hexane instead of Methylene Chloride.
(6) LOD Study SM10
(7) MDL Study QZ25
(8) Based on PCBWSI until sufficient TCLP data is collected to calculate LOD.