Geosyntec consultants

55 SW Yamhill St., Suite 200
Portland, OR 97204
PH 503-956-5501
www.geosyntec.com

Memorandum

Date: 21 June 2011

To: Lori Blair, Carl Bach and Brian Anderson
Boeing Company

Copies to: Karen Keeley
U.S. EPA Region 10

From: Marc Leisenring, Dan Pankani, Jim Howell, Brandon Steets, and Eric Strecker
Geosyntec Consultants, Inc.

Subject: Draft Biofilter Media Bed Pilot Study for North Boeing Field
Geosyntec Project: PW0250, Phase 15

Storm drain discharges from the North Boeing Field (NBF) have been identified as potential sources of PCBs to the Lower Duwamish Waterway. On September 29, 2010 Boeing entered into an Administrative Settlement Agreement and Order on Consent for Removal Action (ASAOC) with the Environmental Protection Agency (EPA) (CERCLA-10-2010-0242). Pursuant to the requirements of the ASAOC, Boeing is addressing PCBs by implementing short-term and long-term stormwater treatment systems. The Short-Term Stormwater Treatment (STST) system, which is an active treatment system based on the Washington Department of Ecology approved Chitosan Enhanced Sand Filter (CESF) design, is currently treating flows in the North lateral storm drain line. The Long-Term Stormwater Treatment (LTST) system, also a CESF system, will be installed and operating by September 30, 2011 to treat flows at the King County Lift Station (LS431). This proposed biofilter media bed pilot study will test a passive media filtration system design for treating storm flows at the North lateral as an alternative or in addition to the active CESF system at LS431.

Study Purpose and Objectives

The overall purpose of the pilot study is to evaluate whether media bed filtration can consistently achieve the long-term Interim Goal for PCBs in water and solids outlined in the ASAOC during both wet and dry weather conditions. These goals are summarized in Table 1.

Table 1: Long-Term Interim Goals for PCBs in Water and Solids Discharged to Slip 4

Matrix	Description	Reference	Value
Water	Aquatic Life – Fresh/Chronic Interim Goal	USEPA, 2010	0.014 µg/L
	Aquatic Life - Marine/Chronic Interim Goal	USEPA, 2010	0.030 µg/L
Solids	Total dry weight Interim Goal	USEPA, 2010	0.1 ppm (mg/kg)
	Sediment Quality Standard adjusted for site specific total organic carbon (recommended by Landau as an alternative to the 0.1 ppm Interim Goal)	Landau Associates, 2010	0.42 ppm (mg/kg)
	Expert Panel's mass load-based Interim Goal	June 9, 2011 EPA Meeting	To Be Determined

Two different media mixes are proposed for testing. The media components of the first mix will be based on the Pitt and Clark (2010) bench-scale lab study for the Boeing Santa Susanna Field Laboratory (SSFL), which found that a mix of rhyolite sand, zeolite, and granular activated carbon (GAC) (SSFL Media) had desirable hydraulic properties and was effective at removing fine particulates and dioxins. The SSFL Media should also remove PCBs from stormwater as the two compounds (dioxin and PCBs) are physiochemically similar and behave similarly in the environment. The second mix (Modified SSFL Media) would replace the GAC component in the SSFL Media with a lower cost, geochemically inert organic matrix (IOM), such as walnut or hazelnut shells.

For all media filtration technologies, pretreatment is required to remove coarse solids and increase the longevity of the filter. For the full scale system, an inclined plate/tube separator tank (Lamella settler) or other advanced sedimentation process is recommended to remove medium and coarse particulates. However, one of the objectives of the pilot study is to specifically evaluate the cumulative solids loading capacity before clogging begins to occur. Therefore, only limited pre-treatment is recommended such that higher loadings may be observed during the course of the study. Also, the treatment performance of the Lamella settler at removing particles of known size and density is relatively simple to estimate mathematically, so it is not deemed necessary to field test this technology at a pilot scale. Therefore, rather than including a sedimentation tank in the pilot study design, only an in-line, 75 µm, auto-backflush strainer is recommended for pre-filtration. This device will remove the coarse material that may otherwise clog the flow control valves to the media beds while still passing a sufficient quantity of solids to allow for meaningful media filtration performance testing. The backflush volume may be discharged back to the storm drain for downstream treatment in the LTST system or collected for laboratory analysis.

Figure 1 summarizes the proposed pilot study setup with respect to the primary components and monitoring locations. As shown in the figure, flows will be diverted from the storm drain system through an in-line strainer, which will be evenly split to each media bed using flow control valves. Discharge from the media beds will be combined prior to returning to the storm drain system. Flows will be continuously monitored and water quality grab samples will be frequently collected at influent, effluent, and intermediate locations. The details of the system setup and monitoring plan are provided in the next sections.

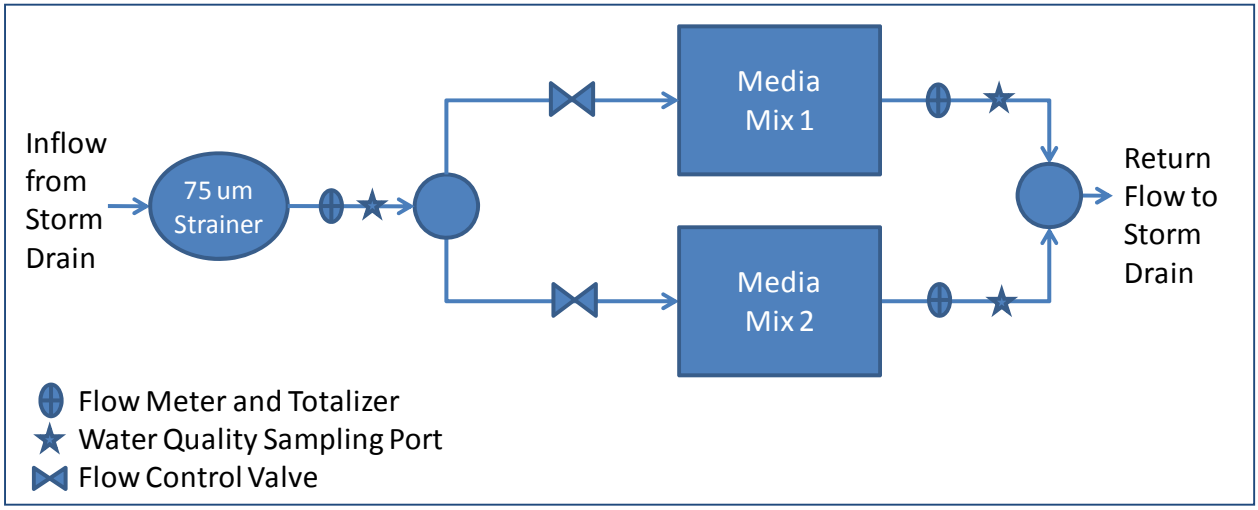

Figure 1. Overall Pilot Study Components and Monitoring Locations.

Study Scale, Location, and Design Parameters

The pilot system is proposed to be located within the existing footprint of the STST system and will be constructed after the North lateral reroute line is complete and the LTST system at LS431 is operational (for details see Geosyntec Consultants and Landau Associates, 2011). An alternative location along the North lateral re-route line west of the current STST system may be selected prior to initiation of the study. However, regardless of the location, the pilot system will treat diverted flows from the on-site North lateral re-route line from MH130A. Note that the full scale biofilter media bed system, if implemented, may be designed to treat either just the North lateral or all flows at LS431, but for the pilot study only the North lateral is being considered. The North lateral was selected for the pilot study because the highest PCB concentrations are observed for this storm drain and the North lateral on-site re-route line from MH130A will be a pressurized storm drain that can be easily tapped into. Figure 2 shows the potential locations for the pilot system.

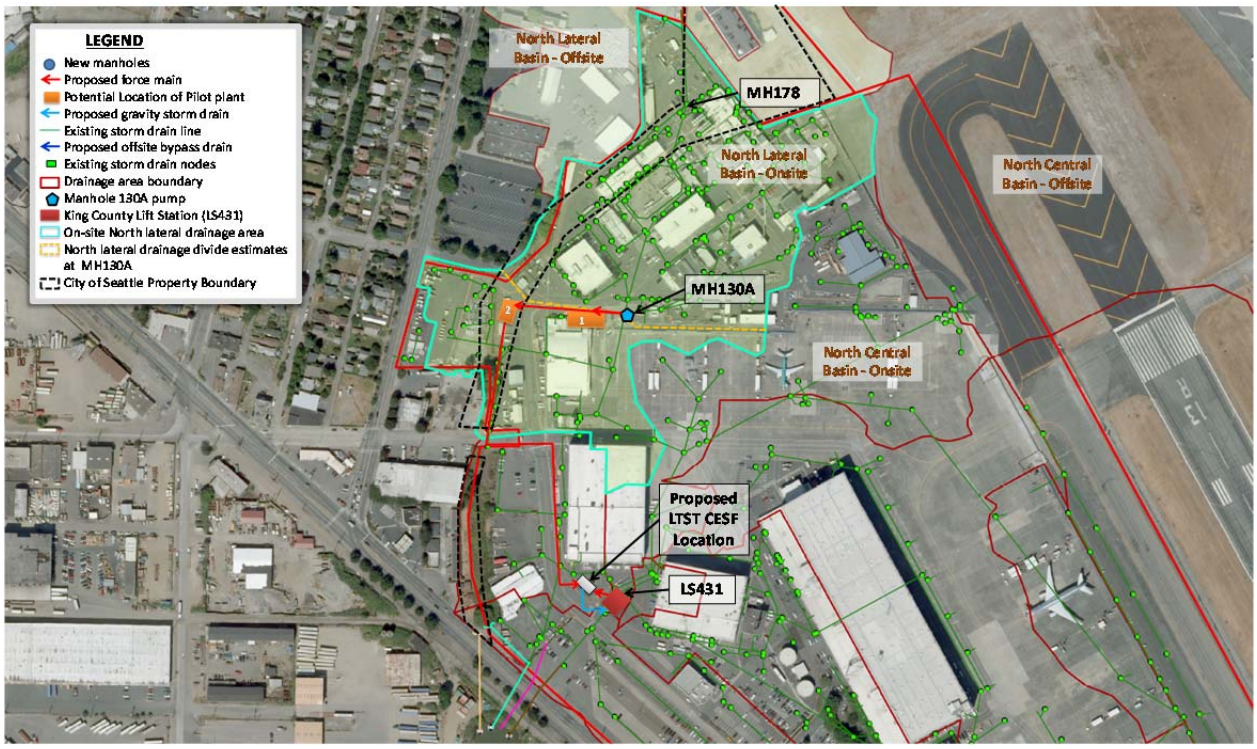

Figure 2. Pilot Study Test Location Options.

The current STST system treats stormwater pumped from MH130A at a maximum operational flow rate of 540 gpm (1.2 cfs) (Landau, 2011). For a media bed filter, the treatment flow rate would ideally be equalized using detention storage to reduce the size of the filter bed (Pitt et al., 2010). Based on the Pitt and Clark (2010) study, the SSFL media mix can sustain a long-term treatment flow rate of approximately 0.05 gpm/ft^2. Therefore, at the STST operational flow rate the media filter would need to be nearly 11,000 ft^2. However, with equalization storage the treatment flow rate, and thus the filter area, may be reduced. Based on preliminary design estimates and continuous simulation modeling conducted during the development of the LTST Work Plan (Geosyntec, 2011), equalization storage was estimated to reduce the peak flow rate to 70% of the diversion pump rate, or approximately 380 gpm. Assuming a 0.5% scale treatment flow rate for the pilot study, the media beds should be sized to treat approximately 2 gpm. The treatment rate results in media bed surface areas of 40 ft^2 and corresponds to reasonable tank sizes for the field study.

For the pilot study, providing equalization storage is not recommended because it is not needed to test the proposed treatment technology and would unnecessarily complicate the design and operation. Therefore, the peak diversion flow rate from the North lateral bypass line is recommended to equal twice the media bed treatment rate, or 4 gpm. This diversion flow rate

can be achieved using a 2 gpm flow control valve upstream of each media bed. Flows from the pilot test apparatus would be returned to the North lateral bypass line or other approved location.

Based on preliminary sizing calculations for the full scale system, the pilot scale system has been sized with the design parameters summarized below in Table 2.

Table 2. Preliminary Design Parameters for Pilot Scale Biofilter Media Bed.

Secondary Treatment	Full Scale	Pilot Scale (each media bed)
Peak Inflow Rate	380 gpm	2.0 gpm
Peak Surface Loading Rate	0.05 gpm/ft^2	0.05 gpm/ft^2
Calculated Filter Surface Area	7,600 ft^2	40 ft^2
Media Depth	2 ft	2 ft
Media Volume	563 CY	3 CY

While the use of vegetation on the surface of the media bed is recommended for the full scale system, it is not recommended for the pilot study due to the time required for the vegetation to become established and the presumption that plants will only serve to improve the performance of the system rather than impair its performance. Research conducted by Pitt (2011) indicates the presence of vegetation does not significantly affect the infiltration rate of the underlying material, as long as the grasses are not thickly matted with a dense thatch. In fact, as clearly stated by Pitt: "vegetation has several important roles in biofiltration systems, including: 1) affecting surface infiltration rates, 2) incorporating imported silts into soil to preserve long-term performance, and 3) accumulation of pollutants in the plant mass, amongst others." A mix of grasses and hard-stemmed plants will help keep soils open to infiltration and help breakup any surface crusts. Top soil to support the plants should be minimally compacted sandy loam soil or sandy soil, possibly amended with compost. In addition, the growth of native vegetation on the top of the media bed for similarly designed treatment systems at a California site is currently being investigated (WRA, 2011). While the native plant palette selected for the California site will be quite different than for NBF, the study should provide valuable information on the top soil and nutrient requirements needed to sustain plant growth.

Primary Design Components

The primary components for the pilot system include the inlet works, media beds, underdrains, outlet works, tanks, flow control valves, in-line strainer, PVC piping and connections, sampling ports, flow meter, filtration media, geotextile, and the slotted underdrain. The attached drawing provides the design details for the pilot system with the various components. Brief descriptions of the system components are provided below.

Inlet Works

The inlet works includes a 2" diversion pipe from the North lateral re-route force main, a 75 µm in-line particle strainer, a paddle wheel flow meter, a sampling port (lab cock valve), and two flow control valves. The particle strainer must include a return flow pipe or be discharged to a collection vessel. The flow control valves should regulate the flow into each media bed at a constant 2 gpm regardless of the pressure in the force main.

Media Beds

Two 4Wx10Lx4D tanks are recommended for the media beds; however the length to width aspect ratio is not critical because they will operate using vertical filtration. Therefore, alternative tank dimensions may be substituted for the media bed as long as the total surface area and depth are the same.

Approximately 2.5 feet of media should be placed at the bottom of the tanks after placing the underdrain (see next section). The recommended media mixes for testing includes the following material components:

Media Mix 1:

Rhyolite sand (10 x 60 grain size, standard sieve size)	50%
Zeolite (14 x 40 grain size distribution, standard sieve)	30%
Granular activated carbon (GAC), virgin coconut shell-based (8 x 20 grain size distribution (standard sieve size)	20%

Media Mix 2:

Rhyolite sand (10 x 60 grain size, standard sieve size)	50%
Zeolite (14 x 40 grain size distribution, standard sieve)	30%
Hazel nut and/or walnut shells	20%

Underdrain System

The underdrain system for each tank consists of a 2", schedule 40, slotted PVC well screen encased in 2-4 inches of #8 pea gravel. The well screen should have slot openings that are no wider than 0.01 inches. The pea gravel should be wrapped in geotextile fabric to further minimize the migration of fines.

The well screen should be connected to a solid vertical pipe at the upstream end that sticks out of the top of the media bed and is capped with a vent to allow air to escape. The downstream end of the well screen should be connected to a bulk head that penetrates the tank.

Outlet Works

The media beds are recommended to be operated using an outlet control to increase the contact between the influent and the media mix. The outlet control is a vertical stand pipe with an orifice located at an elevation slightly lower than the inlet elevation to account for head losses within the media. With this configuration, at steady state the inflow would equal the outflow. To allow for the media to periodically dry out, a low flow orifice sized to completely drain the media within 24 hours is recommended. For the recommended size, this low flow orifice should be approximately equal to ¼". This orifice should be closed during sampling periods when an approximate steady flow condition is desired.

Testing Plan

Water quality sampling is needed at the media bed inflows and outflows. At a minimum, whole water analyses of PCBs and Total Suspended Solids (TSS) are needed. However, particle size distribution analyses are also recommended to assess the system performance with respect the removal of particulate solids. Also, total and dissolved organic carbon should be analyzed to further characterize the stormwater solids and potential for PCB partitioning between particulate and dissolved phases.

Sampling should occur during both wet and dry weather conditions. Monitoring data indicates that PCB concentrations and suspended solids characteristics may significantly differ between storm flows and base flows.

During wet weather conditions, five to nine storm events greater than 0.2 inches with durations longer than 4 hours should be targeted for sampling. Samples should be collected after the first hour of rainfall and when runoff or surface ponding on impervious surfaces is observed. Water quality grab samples should be collected at the sampling port after the in-line strainer and at the sampling port of each media bed outlets (total of three sampling locations). Effluent samples should be collected 3 hours (consistent with approximate average residence time in the media bed) after the influent sample to ensure the same storm event is being sampled at both locations. To reduce in-storm variability, manual composite samples may be collected instead of instantaneous grabs by collecting individual samples of equal volume 20 to 30 minutes apart for up to 3 hours and then combining into a single collection vessel. Because the flow control valves will regulate the inflows at a constant rate of 2 gpm, this time-proportional compositing scheme will be approximately equal to flow-proportional compositing.

During dry weather conditions, at least five samples should be collected for water quality analysis. These samples may be collected at any time during an active pump cycle. However, to ensure that influent and effluent samples are properly paired, a 3 hour lag time should be used.

Additional dry weather samples could be collected if there is high variability in the observed performance of the treatment system or if one or collected sample appears anomalous.

The flow control valves will ensure that flow rates into the media beds never exceed 2 gpm. The paddle wheel flow meter will provide a digital read out of instantaneous flow rates that can be used to check the flow rates into the media beds. The flow meter will also provide cumulative flow volumes such that, when combined with TSS concentrations, cumulative loading can be estimated.

To evaluate potential changes in treatment rates through the media bed, the depth of ponding above the high flow outlet orifice should be recorded during all field visits when the system appears to be operating at approximate steady flow conditions. The low flow orifice should be closed and the MH130A pump station should be on.

Estimated Materials and Analytical Costs

The following table summarizes the estimated materials and analytical costs for the pilot study. Construction, operations and maintenance, and monitoring labor costs are not included here. This preliminary materials and analytical cost estimate should be reviewed by the selected construction contractor for confirmation or revision as selected materials may be subject to change.

	Unit	Unit Price	Quantity	Amount
MATERIALS				
Fiberglass Tanks 120"L X 48"W X 48"D	Each	$ 3,000	2	$ 6,000
Flow Meter 1.2 to 12 gpm	Each	$ 700	1	$ 700
Auto Backflush Strainer 75 um	Each	$ 780	1	$ 780
Flow Control Valve 2 gpm	Each	$ 300	2	$ 600
Yard Piping PVC Pipe Valves Fittings	Each	$ 1,000	1	$ 1,000
Media Blended & Placed (CY)	Cubic Yard	$ 250	20	$ 5,000
2" Dia. Slotted PVC Well Screen, 10' section	Each	$ 50	2	$ 100
Total Materials Cost				*$ 14,180*
LABORATORY*				
PCB	Each	$ 250	42**	$ 10,500
TSS	Each	$ 25	42	$ 1,050
PSD	Each	$ 100	42	$ 4,200
TOC/DOC	Each	$ 80	42	$ 3,360
Total Lab Costs				*$ 19,110*
TOTAL MATERIALS AND LAB COSTS				**$ 33,290**

* Analytical costs are approximate and should be replaced with Boeing's contracted lab rates.
** 42 total samples assumed based on 3 sample locations each collected for 9 wet plus 5 dry weather events.

Proposed Schedule

The pilot system is recommended for construction in September/October 2011 after completion of the LTST system and so that it is ready for testing by the start of the wet season (October 2011). The pilot study completion date is estimated to be March 1, 2012 with the final study report to be completed within 30 days from the receipt of final lab results. Assuming a 4-week lab processing period and data QA/QC, it is estimated that the final summary report would be submitted to EPA by mid-April 2012.

References

Geosyntec Consultants, 2011. *Final Removal Action Work Plan: Long-Term Stormwater Treatment. North Boeing Field*. January 26.

Geosyntec Consultants and Landau Associates, 2011. *Final Pre-Design Technical Memorandum: Long-Term Stormwater Treatment.* April.

Landau Associates, 2010e. *Technical Memorandum: PCB Remediation Level for Storm Drain Solids.* July 23.

Landau, 2011. *Technical Memorandum – March 2011 Progress Report, North Boeing Field Stormwater Treatment, Lower Duwamish Waterway Superfund Site, EPA Docket No. CERCLA-10-2010-0242.* Prepared for Karen Keeley, U.S. EPA Region 10.

Pitt, R., & Clark, S. E., 2010. *Evaluation of Biofiltration Media for Engineered Natural Treatment Systems.* Submitted to Geosyntec Consultants as part of the Boeing SSFL Project.

Pitt R., Voorhees, J. and Clark, S.E., 2010. *Continuous Long Term Simulations for Evaluating Storage-Treatment Design Options of Stormwater Filters.* Prepared by Dr. Pitt, John Voorhees and Shirley Clark and dated September 27, 2010.

Pitt, 2011. *Effects of Surface Vegetation on Biofiltration Unit Infiltration Rates and Other Processes.* Prepared for SSFL. March Draft.

USEPA, 2010. *Administrative Settlement Agreement and Order on Consent for Removal Action*. USEPA Region 10, Docket No. CERCLA-10-2010-0242. Effective September 29.

WRA, 2011. *Technical Memorandum – Pilot Study for BMP Soil Media.* Prepared for SSFL. May Draft.

* * * * *