TECHNICAL MEMORANDUM

LANDAU ASSOCIATES
ENVIRONMENTAL | GEOTECHNICAL | NATURAL RESOURCES

TO: Carl Bach, The Boeing Company

FROM: Colette Griffith and Kristy J. Hendrickson, P.E.

DATE: June 20, 2011

RE: BED LOAD SAMPLING AND ANALYSIS RESULTS SHORT-TERM STORMWATER TREATMENT NORTH BOEING FIELD, SEATTLE, WASHINGTON

This technical memorandum presents results of bed load sampling of storm drain solids at North Boeing Field (NBF) in Seattle, Washington. Bed load sampling was performed in accordance with Addendum No. 1 to the January 7, 2011 *Appendix C - Sampling and Analysis Plan, Removal Action Work Plan Short-Term Stormwater Treatment, North Boeing Field, Seattle, Washington* (SAP; Landau Associates 2011). Bed load sampling was performed per the requirements of the Administrative Settlement Agreement and Order on Consent (ASAOC) for Removal Action [Docket No. Comprehensive Environmental Response, Compensation, and Liability Act (CERCLA) -10-2010-0242] between Boeing and the U.S. Environmental Protection Agency (EPA 2010). The EPA-approved sampling schedule included in Addendum No. 1 was a modification from the schedule presented in Attachment C-1 of the Statement of Work (SOW; Appendix C of the ASAOC), and from the SAP summary table that was included with the *Short-Term Stormwater Treatment Removal Action Work Plan* (STST RAWP; Landau Associates 2011) and the *Long-Term Stormwater Treatment Removal Action Work Plan* (LTST RAWP; GeoSyntec 2011).

Bed load sampling was performed as a requirement of the ASAOC as is listed in Attachment C-1 of the SOW (Appendix C of the ASAOC). Bed load sampling was conducted to provide assessment of polychlorinated biphenyls (PCBs) in larger size fraction solids that may not be effectively captured in other solids samples. Samples were also analyzed for metals and semivolatile organic compounds if sufficient sample material was present.

The goal of the bed load sampling was to collect bed load solids that are transported along the bottom of the storm drain system piping and may not be readily sampled by other previously employed sampling techniques in the storm drain system (such as sediment trap sampling, in-line solids filtration, and flow-weighted auto-composite water sampling). Bed load materials have particle sizes or a density that do not normally allow movement far above or for long distances out of contact with the bed at the bottom of the storm drain pipe (excluding conditions such as influence of a pump intake line). This technical memorandum describes bed load sampling procedures including sampling frequency, sampling

devices, sample collection methods, and laboratory analytical results. It also provides an evaluation of the analytical results and conclusions based on the results.

Boeing also continued sampling of sediment trap solids at sediment trap locations (T1-MH422, T2-MH356, T3-MH364, T4-MH221A, T4A-MH229A, T5-MH363, and T5A-MH178; these locations are also identified with a prefix of SL4) and sampling of whole water and filtered solids from the STST system influent and effluent during the time period that bed load sampling was performed. In addition, Boeing and SAIC conducted sampling of filtered solids during storm and base flow events at LS431 and MH108 during this time.

SAMPLING DEVICES

Various bed load samplers were evaluated for use in the NBF storm drain system. Bed load samplers are typically used in surface water and are designed to sample sand, silt, gravel, and rock debris carried along the bottom of a stream as bed load. There is not a specific or standard bed load sampler recommended for sampling in storm drain lines. The Helley-Smith bed load sampler with 1,000 micron opening mesh filter bags was selected for bed load sampling activities at NBF based on the ease of use in storm drain pipes. The sampler, shown on Figure 1, has a 3-inch by 3-inch entrance opening, and weighs approximately 4 pounds. The 1,000 micron opening mesh filter bags were chosen to have a large enough opening size to minimize potential clogging, but also to have a small enough opening size to minimize the loss of fine bed load through the mesh.

Bed load samplers were secured to the base of the storm drain pipe by field personnel to ensure the sampler remained in a stable position while deployed and that the bottom of the entrance of the sampler remained flush with the bottom of the storm drain pipe. A plastic flap was fastened onto the bottom of the sampler opening to prevent material from passing beneath the sampler. Two bed load samplers were purchased and deployed at NBF per the sample collection methods and locations described below.

SAMPLE COLLECTION LOCATIONS, METHODS, AND FREQUENCY

Bed load samplers were located at (or in the pipe immediately downstream from) storm drain structures where sediment trap samples are currently being collected, with the intent to collect a comprehensive data set of storm drain solids in these locations. The sample locations included T1-MH422, which is downstream from the North, North Central, and 3-380 building laterals; T2-MH356, which is on the south lateral; T3-MH364, which is on the south-central lateral; T4-MH221A, which is on the north-central lateral; and T5-MH363, which is on the north lateral. Over the course of bed load sampling events, one bed load sampler remained at the location of sediment trap T1-MH422 (due to its location slightly upstream of the lift station) and the second bed load sampler was moved to the locations

of the other downstream sediment trap sample bottles (T2-MH356, T3-MH364, T4-MH221A, and T5-MH363). These sample locations are shown on Figure 2. These locations provided information from each lateral that discharges to the lift station and allow comparison of the bed load data with the sediment trap data to provide a comprehensive data set including a wide range of particle sizes. The close proximity of the bed load sampler located at T1-MH422 to the Lift Station (LS431) also allows for data association and evaluation between bed load samples collected at T1-MH422 and filtered solids and whole water samples collected at LS431. In addition, sample location T1-MH422 is downstream of the north, north-central, and 3-380 building laterals and, therefore, provides information regarding all of these drainage areas. Bed load samples were not collected in the Lift Station LS431 discharge pipe because of potential interference with the whole water and filtered solids sampling being conducted at that location.

The bed load sample schedule provided for bed load sample collection in 2-week intervals, except for the first sampling event which was conducted during a single storm event. The sampling schedule is provided in Table 1. Each 2-week sample duration included a mixture of storm events and periods of base flow (during dry conditions). The number of qualifying storm events (i.e., precipitation greater than 0.1 inches with an antecedent dry period of at least 12 hours) that occurred during each sample duration are shown in Table 1.

At the time of sample collection, the bed load sampler was removed from the storm drain pipe by field personnel. The mesh filter bag attached to the bed load sampler was detached and placed into a ziplock bag, labeled, and stored on ice. Field personnel then attached a clean, unused mesh filter bag to the bed load sampler and reinstalled the device (either at the same or a new sample location per the sampling plan).

LABORATORY ANALYSES AND ANALYTICAL RESULTS

Laboratory analyses were performed as described in Section 2.3.4 of the SAP. All analyses were performed at the Analytical Resources, Inc. (ARI) laboratory located in Tukwila, Washington. The laboratory removed and/or scraped as much sample material from the filter bag as possible. Bed load samples were analyzed for PCBs using EPA Method 8082. If adequate solids were available, additional analyses were conducted. The priority for additional analysis was: 1) metals (including mercury) using EPA Method 6010/7471, and 2) semivolatile organic compounds (SVOCs) using Method Puget Sound Dredged Disposal Analysis (PSDDA) SW 8270.

Adequate solids were available to analyze for PCBs in all bed load samples submitted to the laboratory. Adequate solids were available for the additional analyses listed above (metals and SVOCs) at T1-MH422 for the sample collected on April 20, 2011, and at T3-MH364 for the sample collected on March 23, 2011. Detected total PCB concentrations ranged from 0.079 mg/kg to 320 mg/kg. The final sampling event (collected on May 4, 2011) yielded the highest detected PCB concentrations: 4.0 mg/kg at

T1-MH422 and 320mg/kg at T5-MH363. These two locations will be resampled in June 2011 as described below under the Data Evaluation and Conclusions section. A summary of analytical results for the bed load sampling events is provided in Table 2.

DATA EVALUATION AND CONCLUSIONS

Bed load data was compared to the two most recent sediment trap sampling events (April 6, 2009 - April 8, 2010, and November 2, 2010 - April 5, 2011); the filtered solids data from three storm events (March 9, 2011, April 25, 2011, and April 27, 2011) and one base flow event (March 19 - 21, 2011) that occurred during the bed load sampling period. The data comparison is provided in Table 3.

Total PCB results for bed load samples at T1-MH442 were generally one to two orders of magnitude lower than recent sediment trap samples collected at the same location. The final bed load sample collected at T1-MH422 (4.0 mg/kg total PCBs) was within the range of recent sediment trap samples at T1-MH422 (3.95 to 4.09 mg/kg total PCBs). As shown in Table 3, total PCB results for bed load samples at T2-MH356 and T4-MH221A also fell within the range of recent sediment trap sample results at these two locations. Total PCBs detected in the two bed load samples collected at T3-MH364 were slightly less than the recent sediment trap sample results at T3-MH364. Total PCB data in the bed load samples at T1-MH422, T2-MH356, T3-MH364, and T4-MH221A are also consistent with the range of total PCBs detected in filtered solids from LS431 and MH108 (located just upstream of T5-MH363) over approximately the same time period, as shown in Table 3.

Total PCBs detected at T5-MH363 were higher than expected at 320 mg/kg. Only 8.6 grams of solids were collected, therefore the presence of a small particle with elevated PCB concentration, such as a piece of paint, could significantly impact the measured concentration. Total PCBs detected during recent sediment trap sampling events at this location ranged from 2.55 to 3.61 mg/kg. It is anticipated that the elevated detected total PCB concentration in the bed load sample at T5-MH363 is the result of anomalous data and not representative of typical bed load conditions at this location. As mentioned above, T5-MH363 will be resampled in June 2011 to allow for additional data evaluation at this location. T1-MH422 will also be resampled on the same schedule due to the elevated total PCB concentrations detected during the final sampling event (compared to other bed load sample results), although the concentration was within the range of recent sediment trap and filtered solids samples from LS431 and MH108. For the additional bed load samples, samplers will be left in place for a longer time, 4 weeks, to increase the sample volume collected.

The results from the bed load samples, with the possible exception of the single sample from T5-MH363, indicate the sediment trap and filtered solids samples are adequate to evaluate PCB concentrations in solids in the storm drain system. Solids that travel as bed load within the storm drain

system do not appear to have significantly higher concentrations than samples collected in sediment traps or as filtered solids. Other than the additional samples to be collected at T5-MH363 and LS431 in June, additional bed load sampling is not considered necessary for characterization of storm drain solids.

REFERENCES

Landau Associates. 2011. *Removal Action Work Plan, Short-Term Stormwater Treatment, North Boeing Field, Seattle, Washington*. Prepared for The Boeing Company. January 7.

EPA. 2010. Administrative Settlement Agreement and Order on Consent for Removal Action, U.S. Environmental Protection Agency Region 10 Docket No. CERCLA-10-2010-0242; *In the Matter of North Boeing Field and the Slip 4 Early Action Area of the Lower Duwamish Waterway Superfund Site, Seattle, Washington*. September 29.

Geosyntec Consultants. 2011. *Final Removal Action Work Plan: Long-Term Stormwater Treatment, North Boeing Field*. January 26.

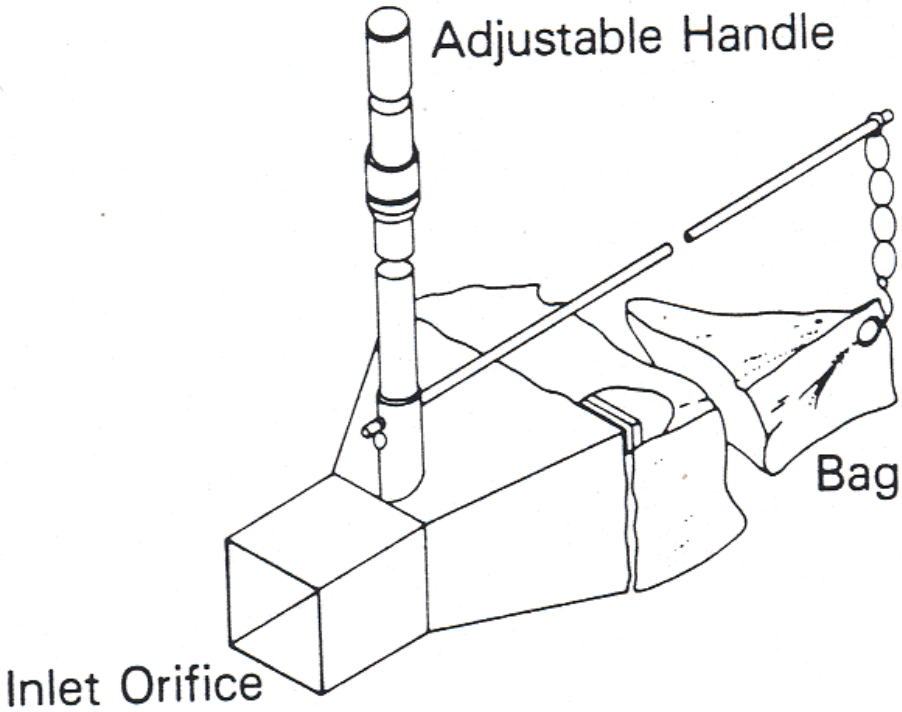

North Boeing Field Seattle, Washington	**Bed Load Sampling Device**	Figure 1

LANDAU ASSOCIATES

1/27/11 P:\025\082\PCB Activities\FileRm\R\STST Docs\Short-Term SW Trtmt WP\EPA Rev Final STST WP 010711\App C - SAP\Addendum 1\SAP Addendum 1 Bed Load Sampling_Fig 1.doc

Y:\Projects\025082\MapDocs\210\009\ProposedBedLoadLocations_11x17.mxd 6/20/2011 NAD 1983 StatePlane Washington North FIPS 4601 Feet

Legend

- North Lateral
- North-Central Lateral
- South-Central Lateral
- South Lateral
- Drainage from Building 3-380 Area
- Drainage from parking lot area
- Other lines

0 300 600
Scale in Feet

Note
1. Black and white reproduction of this color original may reduce its effectiveness and lead to incorrect interpretation.

LANDAU ASSOCIATES

North Boeing Field
Seattle, Washington

Bed Load Sampling Locations

Figure 2

TABLE 1
BEDLOAD SAMPLING SCHEDULE
NORTH BOEING FIELD
SEATTLE, WASHINGTON

Bedload Sample Location	Sample ID	Sample Duration	Storm Events During Sample Duration	Date Deployed	Date Removed
T1-MH422	Bedload-T1-030911	Storm Event	1	3/8/2011	3/9/2011
	Bedload-T1-032311	2 weeks	2	3/10/2011	3/23/2011
	Bedload-T1-040511	2 weeks	3	3/23/2011	4/5/2011
	Bedload-T1-042011	2 weeks	3	4/5/2011	4/20/2011
	Bedload-T1-050411	2 weeks	3	4/20/2011	5/4/2011
T3-MH364	Bedload-T3-030911	2 weeks	1	3/8/2011	3/9/2011
	Bedload-T3-032311	2 weeks	2	3/10/2011	3/23/2011
T2-MH356	Bedload-T2-040511	2 weeks	3	3/23/2011	4/5/2011
T4-MH221A	Bedload-T4-042011	2 weeks	3	4/5/2011	4/20/2011
T5-MH363	Bedload-T5-050411	2 weeks	3	4/20/2011	5/4/2011

TABLE 2
BEDLOAD SAMPLER ANALYTICAL RESULTS
NORTH BOEING FIELD
SEATTLE, WASHINGTON

	BEDLOAD-BLANK-030911 SM45L	BEDLOAD-BLANK-032311 SO45C	BEDLOAD-T1-030911 SM45J	BEDLOAD-T1-032311 SO45A	BEDLOAD-T1-040511 SQ71A	BEDLOAD-T1-042011 SS84A	BEDLOAD-T1-050411 SV30A	BEDLOAD-T2-040511 SQ71B	BEDLOAD-T3-030911 SM45K	BEDLOAD-T3-032311 SO45B	BEDLOAD-T4-042011 SS84B	BEDLOAD-T5-050411 SV30B
Filtration Start Date	**N/A**	**N/A**	**3/8/11**	**3/10/11**	**3/23/11**	**4/5/11**	**4/20/11**	**3/23/11**	**3/8/11**	**3/10/11**	**4/5/11**	**4/20/11**
Filtration End Date	**3/9/11**	**3/23/11**	**3/9/11**	**3/23/11**	**4/5/11**	**4/20/11**	**5/5/11**	**4/5/11**	**3/9/11**	**3/23/11**	**4/20/11**	**5/5/11**
Measured Mass in Filter												
Aroclor 1016 (mg/kg)	0.033 U	NA	0.033 U	0.032 U	0.110 U	0.021 U	0.560 U	0.140 U	0.035 U	0.033 U	0.380 U	100 U
Aroclor 1242 (mg/kg)	0.033 U	NA	0.033 U	0.032 U	0.110 U	0.021 U	0.560 U	0.140 U	0.035 U	0.033 U	0.380 U	100 U
Aroclor 1248 (mg/kg)	0.033 U	NA	0.050 U	0.320 U	0.210 U	0.021 U	0.700 U	0.140 U	0.053 U	0.049 U	0.380 U	150 U
Aroclor 1254 (mg/kg)	0.033 U	NA	**0.069**	**0.320**	**0.320**	**0.039**	**1.600**	**0.370**	**0.140**	**0.140**	**0.950**	**320**
Aroclor 1260 (mg/kg)	0.033 U	NA	**0.042**	**0.160**	**0.120**	**0.040**	**2.400**	**0.260**	**0.096**	**0.052**	0.380 U	100 U
Aroclor 1221 (mg/kg)	0.033 U	NA	0.033 U	0.320 U	0.110 U	0.021 U	0.560 U	0.140 U	0.035 U	0.033 U	0.380 U	100 U
Aroclor 1232 (mg/kg)	0.033 U	NA	0.033 U	0.320 U	0.110 U	0.021 U	0.560 U	0.140 U	0.035 U	0.033 U	0.380 U	100 U
Total PCBs (a) (mg/kg)	0.033 U	NA	**0.111**	**0.480**	**0.440**	**0.079**	**4.000**	**0.630**	**0.236**	**0.192**	**0.950**	**320**
SEMIVOLATILES (µg/kg)												
Method SW8270D												
Phenol	NA	**3,300**	NA	NA	NA	**1200**	NA	NA	NA	**19,000**	NA	NA
Bis-(2-Chloroethyl) Ether	NA	500 U	NA	NA	NA	200 U	NA	NA	NA	11,000 U	NA	NA
2-Chlorophenol	NA	500 U	NA	NA	NA	200 U	NA	NA	NA	11,000 U	NA	NA
1,3-Dichlorobenzene	NA	500 U	NA	NA	NA	200 U	NA	NA	NA	11,000 U	NA	NA
1,4-Dichlorobenzene	NA	500 U	NA	NA	NA	200 U	NA	NA	NA	11,000 U	NA	NA
Benzyl Alcohol	NA	2,500 U	NA	NA	NA	**2800**	NA	NA	NA	54,000 U	NA	NA
1,2-Dichlorobenzene	NA	500 U	NA	NA	NA	200 U	NA	NA	NA	11,000 U	NA	NA
2-Methylphenol	NA	500 U	NA	NA	NA	200 U	NA	NA	NA	11,000 U	NA	NA
2,2'-Oxybis(1-Chloropropane)	NA	500 U	NA	NA	NA	200 U	NA	NA	NA	11,000 U	NA	NA
4-Methylphenol	NA	500 U	NA	NA	NA	**1700**	NA	NA	NA	**31,000**	NA	NA
N-Nitroso-Di-N-Propylamine	NA	500 U	NA	NA	NA	200 U	NA	NA	NA	11,000 U	NA	NA
Hexachloroethane	NA	500 U	NA	NA	NA	200 U	NA	NA	NA	11,000 U	NA	NA
Nitrobenzene	NA	500 U	NA	NA	NA	200 U	NA	NA	NA	11,000 U	NA	NA
Isophorone	NA	500 U	NA	NA	NA	200 U	NA	NA	NA	11,000 U	NA	NA
2-Nitrophenol	NA	500 U	NA	NA	NA	990 U	NA	NA	NA	11,000 U	NA	NA
2,4-Dimethylphenol	NA	500 U	NA	NA	NA	200 U	NA	NA	NA	11,000 U	NA	NA
Benzoic Acid	NA	5,000 U	NA	NA	NA	**3700**	NA	NA	NA	110,000 U	NA	NA
bis(2-Chloroethoxy) Methane	NA	500 U	NA	NA	NA	200 U	NA	NA	NA	11,000 U	NA	NA
2,4-Dichlorophenol	NA	2,500 U	NA	NA	NA	990 U	NA	NA	NA	54,000 U	NA	NA
1,2,4-Trichlorobenzene	NA	500 U	NA	NA	NA	200 U	NA	NA	NA	11,000 U	NA	NA
Naphthalene	NA	500 U	NA	NA	NA	**99** J	NA	NA	NA	**32,000**	NA	NA
4-Chloroaniline	NA	2,500 U	NA	NA	NA	990 U	NA	NA	NA	54,000 U	NA	NA
Hexachlorobutadiene	NA	500 U	NA	NA	NA	200 U	NA	NA	NA	11,000 U	NA	NA
4-Chloro-3-methylphenol	NA	2,500 U	NA	NA	NA	990 U	NA	NA	NA	54,000 U	NA	NA
2-Methylnaphthalene	NA	500 U	NA	NA	NA	200 U	NA	NA	NA	**11,000**	NA	NA
Hexachlorocyclopentadiene	NA	2,500 U	NA	NA	NA	990 U	NA	NA	NA	54,000 U	NA	NA
2,4,6-Trichlorophenol	NA	2,500 U	NA	NA	NA	990 U	NA	NA	NA	54,000 U	NA	NA
2,4,5-Trichlorophenol	NA	2,500 U	NA	NA	NA	990 U	NA	NA	NA	54,000 U	NA	NA
2-Chloronaphthalene	NA	500 U	NA	NA	NA	200 U	NA	NA	NA	11,000 U	NA	NA
2-Nitroaniline	NA	2,500 U	NA	NA	NA	990 U	NA	NA	NA	54,000 U	NA	NA

TABLE 2
BEDLOAD SAMPLER ANALYTICAL RESULTS
NORTH BOEING FIELD
SEATTLE, WASHINGTON

	BEDLOAD-BLANK-030911 SM45L	BEDLOAD-BLANK-032311 SO45C	BEDLOAD-T1-030911 SM45J	BEDLOAD-T1-032311 SO45A	BEDLOAD-T1-040511 SQ71A	BEDLOAD-T1-042011 SS84A	BEDLOAD-T1-050411 SV30A	BEDLOAD-T2-040511 SQ71B	BEDLOAD-T3-030911 SM45K	BEDLOAD-T3-032311 SO45B	BEDLOAD-T4-042011 SS84B	BEDLOAD-T5-050411 SV30B
Filtration Start Date	**N/A**	**N/A**	**3/8/11**	**3/10/11**	**3/23/11**	**4/5/11**	**4/20/11**	**3/23/11**	**3/8/11**	**3/10/11**	**4/5/11**	**4/20/11**
Filtration End Date	**3/9/11**	**3/23/11**	**3/9/11**	**3/23/11**	**4/5/11**	**4/20/11**	**5/5/11**	**4/5/11**	**3/9/11**	**3/23/11**	**4/20/11**	**5/5/11**
Dimethylphthalate	NA	500 U	NA	NA	NA	200 U	NA	NA	NA	11,000 U	NA	NA
Acenaphthylene	NA	500 U	NA	NA	NA	200 U	NA	NA	NA	11,000 U	NA	NA
3-Nitroaniline	NA	2,500 U	NA	NA	NA	990 U	NA	NA	NA	54,000 U	NA	NA
Acenaphthene	NA	500 U	NA	NA	NA	200 U	NA	NA	NA	**29,000**	NA	NA
2,4-Dinitrophenol	NA	5,000 U	NA	NA	NA	2100 U	NA	NA	NA	110,000 U	NA	NA
4-Nitrophenol	NA	2,500 U	NA	NA	NA	990 U	NA	NA	NA	54,000 U	NA	NA
Dibenzofuran	NA	500 U	NA	NA	NA	200 U	NA	NA	NA	**27,000**	NA	NA
2,6-Dinitrotoluene	NA	2,500 U	NA	NA	NA	990 U	NA	NA	NA	54,000 U	NA	NA
2,4-Dinitrotoluene	NA	2,500 U	NA	NA	NA	990 U	NA	NA	NA	54,000 U	NA	NA
Diethylphthalate	NA	500 U	NA	NA	NA	200 U	NA	NA	NA	11,000 U	NA	NA
4-Chlorophenyl-phenylether	NA	500 U	NA	NA	NA	200 U	NA	NA	NA	11,000 U	NA	NA
Fluorene	NA	500 U	NA	NA	NA	200 U	NA	NA	NA	**43,000**	NA	NA
4-Nitroaniline	NA	2,500 U	NA	NA	NA	990 U	NA	NA	NA	54,000 U	NA	NA
4,6-Dinitro-2-Methylphenol	NA	5,000 U	NA	NA	NA	2000 U	NA	NA	NA	110,000 U	NA	NA
N-Nitrosodiphenylamine	NA	500 U	NA	NA	NA	200 U	NA	NA	NA	11,000 U	NA	NA
4-Bromophenyl-phenylether	NA	500 U	NA	NA	NA	200 U	NA	NA	NA	11,000 U	NA	NA
Hexachlorobenzene	NA	500 U	NA	NA	NA	200 U	NA	NA	NA	11,000 U	NA	NA
Pentachlorophenol	NA	2,500 U	NA	NA	NA	990 U	NA	NA	NA	54,000 U	NA	NA
Phenanthrene	NA	500 U	NA	NA	NA	**420**	NA	NA	NA	**360,000**	NA	NA
Carbazole	NA	500 U	NA	NA	NA	200 U	NA	NA	NA	**56,000**	NA	NA
Anthracene	NA	500 U	NA	NA	NA	200 U	NA	NA	NA	**68,000**	NA	NA
Di-n-Butylphthalate	NA	500 U	NA	NA	NA	200 U	NA	NA	NA	11,000 U	NA	NA
Fluoranthene	NA	500 U	NA	NA	NA	**710**	NA	NA	NA	**450,000**	NA	NA
Pyrene	NA	500 U	NA	NA	NA	**680**	NA	NA	NA	**290,000**	NA	NA
Butylbenzylphthalate	NA	500 U	NA	NA	NA	**1200** Q	NA	NA	NA	11,000 U	NA	NA
3,3'-Dichlorobenzidine	NA	2,500 U	NA	NA	NA	990 U	NA	NA	NA	54,000 U	NA	NA
Benzo(a)anthracene	NA	500 U	NA	NA	NA	**180** J	NA	NA	NA	**160,000**	NA	NA
bis(2-Ethylhexyl)phthalate	NA	**6,800**	NA	NA	NA	**24000**	NA	NA	NA	**410,000**	NA	NA
Chrysene	NA	500 U	NA	NA	NA	**450**	NA	NA	NA	**180,000**	NA	NA
Di-n-Octyl phthalate	NA	500 U	NA	NA	NA	**2200**	NA	NA	NA	**630,000**	NA	NA
Benzo(a)pyrene	NA	500 U	NA	NA	NA	**250**	NA	NA	NA	**150,000**	NA	NA
Indeno(1,2,3-cd)pyrene	NA	500 U	NA	NA	NA	**240**	NA	NA	NA	**110,000**	NA	NA
Dibenz(a,h)anthracene	NA	500 U	NA	NA	NA	200 U	NA	NA	NA	11,000 U	NA	NA
Benzo(g,h,i)perylene	NA	500 U	NA	NA	NA	**410**	NA	NA	NA	**120,000**	NA	NA
1-Methylnaphthalene	NA	500 U	NA	NA	NA	200 U	NA	NA	NA	11,000 U	NA	NA
Total Benzofluoranthenes	NA	500 U	NA	NA	NA	**670**	NA	NA	NA	**270,000**	NA	NA
TOTAL METALS (mg/kg)												
Method EPA6010B/7471A												
Arsenic	NA	5 U	NA	NA	NA	40 U	NA	NA	NA	40 U	NA	NA
Copper	NA	0.2 U	NA	NA	NA	**234**	NA	NA	NA	**34**	NA	NA
Lead	NA	2 U	NA	NA	NA	**70**	NA	NA	NA	**60**	NA	NA
Mercury	NA	0.02 U	NA	NA	NA	**0.4**	NA	NA	NA	0.09 U	NA	NA
Zinc	NA	1 U	NA	NA	NA	**1870**	NA	NA	NA	**175**	NA	NA

Bold = Detected compound.

NA = Not Analyzed.

U = Indicates the compound was undetected at the reported concentration.

J = Indicates the analyte was positively identified; the associated numerical value is the approximate concentration of the analyte in the sample.

Q = Indicates a detected analyte with an initial or continuing calibration that does not meet established acceptance criteria (<20% RSDm <20% Drift or minimum RRF).

Blue = Validation process not completed.

(a) Total PCBs is the sum of detected aroclors or, if no aroclors are detected, is the largest reporting limit.

TABLE 3
BEDLOAD SAMPLER ANALYTICAL RESULTS
NORTH BOEING FIELD
SEATTLE, WASHINGTON

Sample Location	Storm Drain Structure	Total PCB Concentrations in mg/kg										
		Bed Load					Sediment Trap		Filtered Solids (a)			
	Sampling Start Date	3/8/2011	3/10/2011	3/23/2011	4/5/2011	4/20/2011	4/6/2009	11/2/2010	3/9/2011	3/19/3011	4/25/2011	4/27/2011
	Sampling Stop Date	3/9/2011	3/23/2011	4/5/2011	4/20/2011	5/5/2011	4/8/2010	4/5/2011	3/9/2011	3/21/2011	4/25/2011	4/27/2011
SL4-T1	MH422	0.111	0.48	0.44	0.079	4.0	3.95	4.09	---	---	---	---
SL4-T2	MH356	---	---	0.63	---	---	0.46	0.68	---	---	---	---
SL4-T3	MH364	0.236	0.192	---	---	---	0.25	0.55	---	---	---	---
SL4-T4	MH221A	---	---	---	0.95	---	1.07	0.77	---	---	---	---
SL4-T5	MH363	---	---	---	---	320	2.55	3.61	---	---	---	---
LS431	LS431	---	---	---	---	---	---	---	0.61	0.092	0.40	0.96
MH108	MH108	---	---	---	---	---	---	---	1.9	---	4.4	1.5

--- = not applicable/no sample analyzed for this location

Notes
(a) All filtered solids samples were collected during storm events with the exception of the sample collected from 3/19/11 to 3/21/11 which was a base flow event