Shell Gulf of Mexico Inc.
3601 C Street, Suite 1000
Anchorage, AK 99503

Shell Chukchi OCS Air Permit
EPA Region 10
1200 6th Ave. Ste. 900, AWT-107
Seattle, WA 98101

September 17, 2009

Re: Shell Gulf of Mexico Inc. comments on the August 2009 Proposed Discoverer / Chukchi OCS/PSD Permit to Construct

Dear EPA,

Shell Gulf of Mexico Inc. provides the attached initial comments on the above-referenced permit. These comments consist of requested technical changes in the permit. These changes include tighter restrictions on several emissions units, together with necessary increases in the use of some other emissions units. The net effect of these technical changes would be to *reduce* net emissions and impacts, providing greater assurance of compliance with Clean Air Act requirements under an even more conservative permit.

Additionally, these technical changes include modified methods for compliance demonstration on some emission units, which are more feasible than, and at least as reliable as, those in the proposed permit, as well as removal of some redundant compliance requirements. Finally these technical changes include several miscellaneous requests that would make the permit more workable and which have no adverse impact on the stringency of the permit or the compliance assurance it provides.

Shell requests that the Agency make these comments available, and also including the third quarter Wainwright data report, for public review and comment by posting them on its Chukchi Sea Air Permit webpage, as well as making them available for discussion by participants in upcoming public hearings in Alaska. In the near future we will be providing EPA with a version of the proposed permit showing suggested revisions in "track changes" mode to demonstrate how we believe the requested technical changes could be expressed in the final permit. We remain available to EPA to discuss or expand on any of these comments.

Sincerely,

Susan Childs

Attachment

cc: *Lance Tolson*
Keith Craik
Nicole St Amand
Rick Fox
Mark Schindler – Octane LLC.
Rodger Steen – Air Sciences Inc.
Eric Hansen – Environ International
Jeffrey Walker - Minerals Management Service

Shell Gulf of Mexico Inc.
Comments on the August 2009 EPA Permit R10OCS/PSD-AK-2009-01
September 17, 2009

1.0 EMISSION UNIT MODIFICATIONS TO REDUCE NET EMISSIONS

In the time since the application was submitted in December 2008, and more recently in order to provide additional assurance that the project will meet air quality standards and increments, Shell has developed several technical changes to the project's operations. Most of these operational changes reduce emissions and overall the permit changes would result in a substantial net decrease in emissions and impacts. These modifications, which should be reflected in the final permit, include:

1.1 Anchor Handler

Conditions N and O (and Tables 2 and 3 on page 4) of the proposed permit identify and authorize emissions from two generic icebreakers with identical emissions factors. The proposed permit allows Shell to designate for a given drilling season one icebreaker as "Icebreaker #1", the principal ice management vessel, and the other as "Icebreaker #2", which would also be authorized to perform anchor handling and bow washing duties. Under some circumstances, Shell could change the designation during the drilling season, Conditions N.1 & O.1. Instead, Shell intends at all times to use as its anchor handler (Icebreaker #2) either the Tor Viking or its Hull 247, both of which will have substantially lower emissions than the generic icebreaker. Shell will therefore forgo the flexibility to use the ice management vessels interchangeably.

The Tor Viking is a vessel built in 2000 and the Hull 247 is an ECO-owned, Shell-specified and chartered vessel, scheduled to be completed by 2012. Both of these vessels have, or will have, late model diesel engines with selective catalytic reduction (SCR) to control nitrogen oxides (NO_x) emissions. Hull 247 will use Tier 4 engine technology and its emissions will meet Tier 4 emission standards. From Shell's May 29, 2009 submission[1], the anchor handler emissions contributed 20 percent to the NO_x maximum annual impact and eight percent to the $PM_{2.5}$ 24-hour maximum impact. These lower anchor handler emissions will reduce impacts substantially. For the emission calculations provided in these comments, the emissions from both anchor handler vessels are calculated and the higher of the two values on a pollutant-by-pollutant basis is used for the tables below and the associated impact evaluation. The emissions and calculations, with references, are provided in Attachment A. Impact details are presented in Attachment B. Annual and 24-hour emissions comparisons are given below.

1 Childs, Susan; Updated Attachments D and E - Response to EPA Region 10 March 12, 2009 2nd Letter of Incompleteness, May 29, 2009

Table 1: Decrease in Annual Anchor Handler Potentials to Emit (tons per year)

	NO_x	PM_{10}	$PM_{2.5}$	SO_2	CO	VOC
Application emissions	850	97	85	84	345	69
New emissions	71	24	23	82	345	50
Decrease	779	73	62	2	0.56	20
Percent Decrease	92%	76%	73%	2%	0.16%	28%

Table 2: Decrease in 24-hour Anchor Handler Potentials to Emit (pounds per day)

	NO_x	PM_{10}	$PM_{2.5}$	SO_2	CO	VOC
Application emissions	26,608	1,153	1,013	999	4,112	823
New emissions	2,203	281	273	976	4,105	590
Decrease	24,405	872	740	23	7	233
Percent Decrease	92%	76%	73%	2%	0.16%	28%

With this restriction, Shell requests that the final permit remove the interchangeability provisions and instead specifically identify the Tor Viking or Hull 247 as Icebreaker #2, and that the final permit decouple compliance between the icebreaker (Icebreaker #1) and the anchor handler (Icebreaker #2) by removing the aggregate emissions and fuel use clauses. Icebreaker #1 will be subject to specific emissions limits instead of limits on emissions "in aggregate" with emissions from both icebreakers under proposed Conditions N.3 and N.4. These specific limits would be 50 percent of previous "aggregate" limits as follows: NO_x: 1699 tons per year (aggregate) reduced to 850 tons per year (Condition N.3.1); PM_{10}: 2,304 lbs/day (aggregate) reduced to 1,153 lb/day (Condition N.4.1); $PM_{2.5}$: 2,025.7 lb/day (aggregate) reduced to 1,013 lb/day (Condition N.4.2). The associated fuel limit decreases would be from 11,429,120 gallons per year to 5,714,560 gallons per year (Condition N.5.1) and 68,030 gallons per day to 34,015 gallons per day (Condition N.5.2). As shown in the tables above, emissions from the Anchor Handler (Icebreaker # 2) would be limited to far below 50 percent of the proposed two-vessel aggregate, resulting in a substantial overall reduction in emissions.

1.2 Nanuq

The application mistakenly described the Nanuq propulsion engine sizes. As a result, the rating identified in Table 5 on page 4 of the proposed permit is incorrect. The Caterpillar 3608 engines are rated at 2710 kW, not 2710 hp, and with this, the hourly power output increases by a factor of 1.34. The "Rating" entry in Table 5 for emission units N-1 and N-2 should be modified accordingly. Condition Q.2 of the proposed permit imposes fuel usage limits on the Nanuq when it operates within 25 miles of the Discoverer. Further analysis indicates that the energy production limitation on the Nanuq's propulsion engines in Condition Q.2.3 was unrealistically low. Shell requests that the daily limitation be modified from 1547 gallons per day to 47,000 kW-hr/day, which is 3000 gallons per day as translated to a daily fuel use limit. To offset this increase, Shell requests that the final permit reduce the allowance for generator engines in Condition Q.2.4 from 1,622 gallons per day to 800 gallons per day (11,350 kW-hr/day). The Nanuq will also be installing Catalyzed Diesel Particulate Filters (CDPF) on its two propulsion and two utility generators, and these controls should be required by the final permit. The net estimated effect of these changes is shown in the tables below. The emission calculations and assumption references are provided in Attachment A.

Table 3: Decrease in Annual Nanuq Potentials to Emit (tons per year)

	NO_x	PM_{10}	$PM_{2.5}$	SO_2	CO	VOC
Application emissions	169.8	10.6	8.5	7.8	55.3	19.6
New emissions	172.4	2.5	1.9	0.4	39.1	13.6
Decrease	-2.6	8.1	6.6	7.4	16.2	6.0
Percent Decrease	-1.5%	76%	78%	95%	29%	30%

Table 4: Decrease in 24-hour Nanuq Potentials to Emit (pounds per day)

	NO_x	PM_{10}	$PM_{2.5}$	SO_2	CO	VOC
Application emissions	2,022	126.5	100.9	92.8	658.7	233.4
New emissions	2,052	29.8	22.1	4.6	465.9	161.8
Decrease	-30	97	79	88	193	72
Percent Decrease	-1.5%	76%	78%	95%	29%	30%

As can be seen from these tables, annual emissions of all criteria pollutants except NO_x are decreased. The increase in NO_x is 2.6 tons per year, which is well below the 779 tpy decrease from the anchor handler, discussed above. Similarly, 24-hour emissions of all criteria pollutants except NO_x are decreased. The increase in NO_x is 30.4 lb., which is well below the 24,405 lb. decrease from the anchor handler. In sum, these requested revisions represent relatively minor adjustments to the operations authorized by the proposed permit, but provide substantial reductions for certain authorized emissions.

1.3 Discoverer Emergency Generator

Conditions E.1.1 and E.1.2 of proposed permit limits operation of the Discoverer's emergency generator to not longer than 20 minutes during any one hour, on any one day. Shell has become aware that U.S. Coast Guard regulations require exercising the emergency generator under load for two hours once per month (46 C.F.R. 97.15-30(b)). The final permit should be revised accordingly to allow compliance with these regulations. Two hours of operation of the emergency generator at a $PM_{2.5}$ emissions rate of 0.03 lb/hour would slightly increase emissions from the generator, but Shell will accept an offsetting decrease in the fuel use limits for cementing unit/logging winches (FD 16 – 20) from 345 gallons per day to 320 gallons per day in Condition I.6.2. This reduction more than offsets the small emergency generator increase in $PM_{2.5}$ emissions, so there is no net effect on impacts. Details and references for assumptions made for this emission calculation is provided in Attachment A.

1.4 Discoverer Incinerator and HPU units

Shell will further decrease its emissions by accepting tighter restrictions on waste throughput limits for the Discoverer incinerator (Unit FD-23). Condition K.6.2 of the proposed permit would authorize incineration of up to 1,525 lb/day of waste material. Shell requests that the final permit reduce this limit to 1,300 lb per day on any day when no HPU unit is used. On days when the Discoverer uses the fuel equivalent of up to one HPU unit operating at capacity for 24 hours (352 gallons per day) it would limit its incineration to 800 lb; and on days when HPU usage is greater than the equivalent of one (greater HPU fuel consumption than 352 gallons per day), it would limit incineration to 300 lb. Each of these throughput restrictions, in combination with the corresponding level of emissions from the HPU unit(s) will result in lower net emissions than would operation of the incinerator at 1,525 lb/day and with the HPU units operating, as currently proposed. Details and references for assumptions made for these emission calculations are provided in Attachment A.

1.5 Effect on Impacts

Although all pollutant impacts discussed within this Section 1 will decrease (except CO, which will increase a small amount) with these updates, it is primarily the 24-hour $PM_{2.5}$ and annual NO_x impacts that are of interest because they were closest to the NAAQS and PSD increment, respectively. The 24-hour maximum $PM_{2.5}$ impact from the Discoverer project is 18.4 $\mu g/m^3$ and

the maximum annual NO_x impact is 18.2 µg/m^3 or less. Both occur at the same locations as in the May 29, 2009 impact analysis. Although baseline 24-hour $PM_{2.5}$ is not clearly defined, even if Wainwright data is considered representative of the maximum baseline offshore, Wainwright $PM_{2.5}$ concentrations could be as high as 17 µg/m^3 – above any observed measurement at that location – and the operation would still be within the NAAQS. Maximum Wainwright measured 24-hour $PM_{2.5}$ concentration, since November 2008, including the data through July 2009 is 14 ug/m^3. The maximum NO_x impact is 73 percent of the PSD increment of 25 µg/m^3, which is also 12 percent less than the impact that would be authorized under the proposed permit. The table below summarizes these updated results.

Table 5: Comparison of Updated Impact Results to Previous Impact Results

Pollutant	Averaging Time	No Background		
		Current Impact Max. [1]	Updated Impact Max. [2]	Difference (%)
Nitrogen Dioxide (NO_2)	Annual	20.8	18.2	-12
Particulate Matter ($PM_{2.5}$)	24-hour	25.6	18.4	-28
	Annual	1.7	1.3	-24
Particulate Matter (PM_{10})	24-hour	28.2	19.4	-31
	Annual	1.9	1.4	-26
Sulfur Dioxide (SO_2)	3-hour	74.0	68.8	-7
	24-hour	28.0	26.8	-4
	Annual	2.1	2.0	-3
Carbon Monoxide (CO)	1-hour	391.2	394.7	1
	8-hour	352.0	355.2	1

[1] From the July 26, 2009 modeling submittal
[2] Highest of the three new modeling scenarios

2.0 MODIFICATION OF COMPLIANCE CONDITIONS FOR PRACTICABILITY AND COMPLIANCE ASSURANCE

2.1 Load monitoring instead of fuel monitoring on generators

Certain conditions in the proposed permit limit, or are derived from, generator fuel usage, and their associated monitoring provisions rely on monitoring fuel consumption. See Conditions C.5, C7.1 through 7.4, C.7.8, C.7.9, N.5, N.9.6.1 through 3, N.9.8, N.9.9, N.10.1.1, N.10.3, N.10.4, O.5, O.11.6, O.11.8, O.12.1, O.12.4, Q.2, Q.6.4, Q.7.1, Q.7.8. The generators covered by these conditions, however, are equipped with systems that allow for more direct emissions monitoring. The primary generators on the Discoverer, the propulsion generators on the Tor Viking, Hull 247, the currently contracted Vladimir Ignatjuk (VI) as 2010 icebreaker, and Nanuq are equipped with a modern and high quality load monitoring and logging system. These systems log the power of the individual engines on a frequency equal to or greater than once every 10 minutes, and some were installed in anticipation of operating under the previous EPA-issued Kulluk (R10OCS-AK-07-01) and EPA-proposed Discoverer (R10OCS-AK-07-02) minor source permits. These monitoring systems are accurate, are capable of calculating emissions on a 10-minute frequency (by matching load-based emission factors with measured load) and do not involve new and cumbersome fuel monitoring equipment. Shell requests that these be the compliance monitoring systems for this permit. As shown in the emission inventory, emission factors are routinely provided in the form of mass per unit of energy output, as Shell is requesting here, and are used routinely in other permits. This type of monitoring system is more reliable and accurate than fuel monitoring and allows for the calculation of emissions as a function of load, so provides a higher level of compliance assurance for the emissions limits that apply to these sources.

This method of calculating emissions is presented in full detail in the Kulluk permit and is programmed into the ship load monitors, ready for use. Before the end of the public comment period Shell will provide specific revised conditions that would implement a load monitoring approach to compliance assurance in place of the fuel monitoring approach in the proposed permit. The requested revisions will not alter the fact that the permit will require Shell to monitor certain parameters in order to assure compliance with underlying emission limits; it will merely provide a better alternative for doing so.

2.2 Smaller engines – fuel consumption by flow meter or tank measurement

The following monitoring, recordkeeping and reporting conditions in the proposed permit unnecessarily require continuous fuel flow metering exclusively: Conditions F.6, G.8, H.8, I.8, J.6, N.10, O.12, and Q.7. These monitoring requirements are associated with fuel use limits for small combustion units, which all impose daily or yearly limits. As a result, continuous flow monitoring is not necessary. For most of the affected tanks (depending on shape and orientation), a precise 24-hour total is readily available from measurement of fuel tank fuel volumes. For these emission units, measuring tank fuel volume can replace the per-emission unit

in-line fuel monitors called for in the proposed permit. These tank measurements are robust (little to go wrong), are in place, are currently used for operational tracking purposes and are accurate. They do not necessitate cutting of existing fuel lines and laying additional new fuel lines. Deck space is at a premium and additional lines could be a safety hazard. Furthermore, some of the emission units are portable and no space has been planned for additional fuel meters. Some of the tanks may be of odd shapes and otherwise not conducive for accurate fuel volume measurement and in these cases in-line fuel metering could be the preferable and more accurate measurement. Shell requests the option in the permit of using either fuel tank volume measurement, or fuel meters on groups of sources (as grouped in the permit). Shell would offer to demonstrate which tanks could have their fuel volumes measured accurately.

3.0 ELIMINATION OF REDUNDANT OR UNNECESSARY COMPLIANCE CONDITIONS

3.1 Associated fleet locations relative to the Discoverer

From a safety and operational perspective, it is important that, should it be necessary, each vessel have the ability to occasionally enter or traverse the applicable exclusion area. For practical and technical reasons, doing so on the rare occasion it might be needed would not put NAAQS or increment compliance in jeopardy because the vessels would not be breaking ice at full power within the applicable exclusion area or remaining in the area for extended periods at lower power. There are specific duties for the associated fleet vessels (icebreaker, anchor handler, Nanuq and re-supply ship) and these have been defined in the application. The application describes from the operator's perspective how they will be operated and the normal operating scenarios and the maximum emission scenario. The vessels have no other duties that would produce comparable emissions to those modeled in the permit application, which, for the icebreakers are the emissions associated with full-power operation. There is one primary purpose for the massive engines on the icebreakers and that is to break thick ice. The ice breaking will necessarily occur outside the applicable exclusions areas because it would be counterproductive and ineffective for the icebreaker to attempt to manage ice closer to the Discoverer. The icebreaker must intercept ice floes at a sufficient distance upwind of the Discoverer such that, if it is determined that the ice cannot be fragmented or diverted, there remains sufficient time for the Discoverer to complete emergency move-off procedures before the ice reaches it. (It takes hours for the Discoverer to extract drill stem, close a well and to move off site to avoid the ice.) A secondary purpose of the anchor handler (an icebreaker) is to set and retrieve anchors, which is addressed in the application as an operating scenario. Apart from icebreaking outside the applicable exclusion areas, and anchor handling, there is no other operational condition under which the large engines of the icebreakers would operate at any rate other than low power sufficient to propel the ship. No other potential load exists, except possibly to tow another vessel, and any towing would be undertaken only as an emergency.

At the same time, an icebreaker may need to shift directions quickly because of shifting wind direction and ice floes, and may need to temporarily enter or cross its exclusion area. Such episodes of less than full power output do not present a risk of exceedance of any air quality standard because they are not worst-case. Similarly, if there is some maintenance activity calling the icebreaker to a different location, it should be able to cross through this exclusion area. If there is a safety reason for the icebreaker to move, it must have the flexibility to move freely. Thus if the icebreakers operate within the specified exclusion area, their engines will have relatively low emissions – certainly lower than if they were breaking ice outside that zone, which is the worst-case emissions scenario, which has been modeled in the application.

There are sufficient operational and economic reasons that the associated fleet will perform its highest-emitting duties at the locations described in the application, and the proposed permit, in

Condition A.1, already requires Shell to operate the associated fleet in accordance with the application and supporting materials. The associated fleet location restrictions are, therefore, redundant, and as explained, would create unnecessary safety and operational risks. Shell requests that the final permit remove the associated fleet location restrictions in proposed permit Conditions N.6, O.6, Q.3, along with the related monitoring and record-keeping

3.2 Other redundant compliance conditions

The permit contains a number of annual limits on fuel usage by specific emissions units (and on incinerator throughput). See e.g., Conditions I.6, K.6, N.5, O.5, Q.2. Annual limits are redundant in view of the overarching limit of 168 days of drilling per year, which limit was carefully designed and validated to protect all applicable air quality standards and increments taking into account the emissions from these units. These subsidiary annual limits should be deleted from the permit. The permit will remain no less effective and stringent by relying on the 168-day limit.

3.3 Other emission unit conditions

3.3.1 Ammonia CEM

Condition C.7.6.4 requires continuous monitoring of ammonia from the Discoverer generator SCR exhaust. Shell requests that this condition be replaced by a stack test demonstration of compliance with the BACT limits. Demonstrating compliance with emission limits by initial stack test is a common practice and would give more reliable results than a CEM. Operating a continuous emission monitor (CEM) would be particularly challenging in the Arctic environment. Further, there is no unique issue in the Chukchi giving special sensitivity to ammonia emissions that would indicate the need for CEM monitoring, even if it could be reliably performed on the Discoverer.

3.3.2 Propulsion engine testing at 20 percent

Conditions N.9.1 and O.11.1 require stack testing for the icebreaker and anchor handler propulsion engines at 20 percent of capacity. This level of operation is considerably lower than normal operating conditions, under which these engines run at least 30 percent capacity. If this lower level of operation is of interest to EPA, then the resulting emission factors should not be applied to the normal operating conditions for determination of emissions, because, the engines, while not emitting in large quantities at these low power levels, oftentimes have higher emission factors (mass of pollutant per unit power output) at these levels. If this is an important or informative emission level to EPA then this is another reason why the load monitoring compliance tracking system must be use in place of the fuel monitoring system. Otherwise, this testing level should be eliminated as it is likely to bias the emissions estimates.

3.3.3 Generic emission factors – smaller engines.

Conditions F.5, G.7, H.7, I.7, J.5 and others, in combination, requires some 555 parameter stack tests, approximately a third of which are to be accomplished each year. This is an enormous

number of tests, not realistic to be performed in the time the vessels are available to Shell to test. During the permitting application process, EPA determined the highest emission factor that would be justifiable for each emission unit. It is highly likely that these emission factors are on the high side of the actual emissions. Shell accepts the use of these for the smaller emission units and requests that these same emission factors be used to demonstrate compliance. Shell recommends that stack testing not be required for the new Tier 3 engines, the cranes, the cementing and logging units, the boilers and utility generators. This would decrease the required stack testing to about 200 stack tests, about 80 per year. In addition, Shell requests that the stack tests for these smaller units be replaced by the use of the permit application factors. These smaller emission units represent the smaller portion of the $PM_{2.5}$ and NO_x emissions.

4.0 MISCELLANEOUS CHANGES TO STREAMLINE COMPLIANCE

4.1 Elimination of unimportant testing

Conditions B.7.9, B.9, B.10, C.6.3, C.6.4.2 & 3, F.5.3, F.5.4.2 &3, G.7.3, G.7.4.2 & 3, H.7.3, H.7.4.2 & 3, I.7.3, I.4.2 & 3, J.5.3, J.5.4.2 & 3, K.7.2 and K.7.4.2 & 3 all require Shell to test fuel for density and heat content. These parameters have no relation to and are not indicative of compliance with the emissions limits for any emissions unit covered by the permit compliance-related benefits and they should be eliminated. Additionally, CO and VOC impacts are well below the NAAQS; thus testing of them is of little value over use of the application-provided factors. Accordingly, Shell requests the elimination or modification of at least Conditions B.7.9, B.9, B.10, C.6.3, C.6.4.2 & 3, F.5.3, F.5.4.2 &3, G.7.3, G.7.4.2 & 3, H.7.3, H.7.4.2 & 3, I.7.3, I.4.2 & 3, J.5.3, J.5.4.2 & 3, K.7.2 and K.7.4.2 & 3.

4.2 Clarification of terms

Conditions N.1.2 and O.1.2 appear ambiguous. They should be modified to clarify that the propulsion engines are also generators that power electric-drive propulsion. The term "generator" meant here should be understood to mean "utility generator".

4.3 Alignment of accuracies

Condition K.8.1.2 would require incinerator feed weighing to be accurate to within 0.05 lb (0.8 oz). The various conditions that limit fuel consumption would require usage to be measured to within two percent accuracy. These requirements are unrealistically and unnecessarily stringent. The stack-test-generated emission factors for the two pollutants of most interest are $PM_{2.5}$ and NO_x, and are only accurate to 15 percent or worse[2]. Compliance with the permit-listed emission limits is determined by multiplying the operating rate (incineration mass or fuel consumption) times the emission factor and the result can be no more accurate than the least accurate term in the equation. So, the result will still be no better than 15 percent accuracy. A scale accuracy of 5 lb over typical charges of 100 lb or greater, and fuel accuracy of 5 percent of daily maximum consumption would not decrease the precision in any material may. Shell requests that the permit be modified to incorporate these more reasonable accuracy requirements.

4.4 Post-Construction Ambient Air Quality Monitoring (Condition R)

For the purpose of aligning the permit requirements with current EPA-approved monitoring programs on the North Slope, Shell requests the following changes in the permit, provided in italics:

---

2 There are numerous reports on inaccuracies associated with the stack test reference methods. The following two are only a small sample of documentation of the serious measurement limitations of stack tests. Lanier, Steven W. (under auspices of: ASME), Reference Method Accuracy and Precision (ReMAP): Phase 1 Precision of Manual Stack Emission Measurements, CRTD Vol. 60, page 4, Richards, John et.al., Optimized Method 202 Sampling Train to Minimize the Biases Associated with Method 202 Measurement of Condensable Particulate Matter Emissions, AWMA November 2-3 2005, Hazardous Waste Combustion Specialty Conference.

Condition 1.1: An alternative $PM_{2.5}$ monitoring station may be used in lieu of the required monitoring station provided that approval of the monitoring station is obtained from EPA. *The currently installed Wainwright station satisfies this requirement if operated in accordance with the remaining conditions herein.*

Condition 2.1: An alternative meteorological monitoring station may be used in lieu of the required monitoring station provided that approval of the monitoring station is obtained from EPA. *The currently installed Wainwright station satisfies this requirement if operated in accordance with the remaining conditions herein.*

Conditions 1.4 and 2.5: The monitoring station shall continue to operate and record data *for three years* or until such time that written approval is obtained from EPA authorizing the termination of its operation, *whichever date occurs first*.

Condition 4: Monthly Reporting. Within ~~30~~ *45* days after the end of each calendar month, the permittee shall submit to EPA a printed summary of the $PM_{2.5}$ and meteorological monitoring data collected during the prior calendar month[3].

Condition 5: Audit Report. The permittee shall submit audit reports with*in* ~~30~~ *45* days after the following events:

5.1 Completion of the post-installation equipment audit;

5.2 Completion of independent performance and systems audit;

5.3 Completion of quarterly audits required for ambient air quality data collection systems; and

5.4 Completion of the semi-annual audits required for the meteorological data collection system.

Quarterly and semi-annual audit periods shall be based on a calendar year[4].

Condition 6: *Quarterly and/or* Annual Report. Within 60 days after the end of each *quarter or* calendar year and following completion of the collection of monitoring, the permittee shall submit to EPA ~~annual/~~final reports in text, tabular, and graphic forms, including data in digitized forma. The digitized formats of the measured air quality and meteorological data shall be in ASCII format and AIRS format.

Condition 7: System and Performance Audit Report. Within 60 days after completion of data collection, the permittee shall also submit the final report for the system and performance audits required prior to monitoring termination.

---

3 NOTE: Per the Wainwright QAPP prepared by AECOM and signed by EPA on January 5, 2009, AECOM will provide a draft report for review within 30 days at the end of each calendar month, however the final report will be submitted to EPA within 45 days at the end of each calendar month.

4 NOTE: Per the Wainwright QAPP prepared by AECOM and signed by EPA on January 5, 2009, audit reports will be submitted to AECOM by the independent auditor within 45 days following the conclusion of each audit.

ATTACHMENT A

Updated emission inventory

Air Sciences Inc.	PROJECT TITLE: Shell Offshore, Inc.	BY: S. Pryor	
	PROJECT NO: 180-15-1	PAGE: 1	OF: 21
ENGINEERING CALCULATIONS	SUBJECT: Discoverer Emissions-AK OCS	DATE: September 17, 2009	

Frontier Discoverer Sources

Unit ID	Description	Make/Model	Rating	Max fuel consumpt. (MMBtu/hr) [1]	Maximum Emissions (lb/hr) [1] PM_{10}	$PM_{2.5}$	NO_x	SO_2	CO	Notes
FD-1	Generator Engine	Cat / D399	1,325 hp	6.91	0.20	0.20	0.77	1.10E-02	0.28	2
FD-2	Generator Engine	Cat / D399	1,325 hp	6.91	0.20	0.20	0.77	1.10E-02	0.28	2
FD-3	Generator Engine	Cat / D399	1,325 hp	6.91	0.20	0.20	0.77	1.10E-02	0.28	2
FD-4	Generator Engine	Cat / D399	1,325 hp	6.91	0.20	0.20	0.77	1.10E-02	0.28	2
FD-5	Generator Engine	Cat / D399	1,325 hp	6.91	0.20	0.20	0.77	1.10E-02	0.28	2
FD-6	Generator Engine	Cat / D399	1,325 hp	6.91	0.20	0.20	0.77	1.10E-02	0.28	2
FD-7	Propulsion Engine	MI / 6UEC65	7,200 hp	0.00	0.00	0.00	0.00	0.00E+00	0.00	3, 4
FD-8	Em Generator	Caterpillar / 3304	131 hp	0.92	0.64	0.64	3.26	1.46E-03	1.79	5
FD-9	MLC Compressor	Caterpillar / C-15	540 hp	3.58	0.18	0.18	3.55	5.71E-03	3.11	6
FD-10	MLC Compressor	Caterpillar / C-15	540 hp	3.58	0.18	0.18	3.55	5.71E-03	3.11	6
FD-11	MLC Compressor	Caterpillar / C-15	540 hp	3.58	0.18	0.18	3.55	5.71E-03	3.11	6
FD-12	HPU Engine	Detroit/8V71	250 hp	1.95	0.10	0.10	5.41	3.11E-03	0.16	7
FD-13	HPU Engine	Detroit/8V71	250 hp	1.95	0.10	0.10	5.41	3.11E-03	0.16	7
FD-14	Port Deck Crane	Cat / D343	365 hp	2.77	0.04	0.04	6.20	4.41E-03	0.13	7
FD-15	Starbd Deck Crane	Cat / D343	365 hp	2.77	0.04	0.04	6.20	4.41E-03	0.13	7
FD-16	Cementing Unit	Detroit / 8V-71N	335 hp	2.62	0.21	0.21	8.66	4.17E-03	0.48	7
FD-17	Cementing Unit	Detroit / 8V-71N	335 hp	2.62	0.21	0.21	8.66	4.17E-03	0.48	7
FD-18	Cementing Unit	GM 3-71	147 hp	1.15	0.09	0.09	3.80	1.83E-03	0.21	7
FD-19	Logging Winch	Detroit / 4-71N	128 hp	1.00	0.08	0.08	3.31	1.59E-03	0.18	7
FD-20	Logging Winch	John Deere/4024TF270	36 kW	0.34	0.01	0.01	0.60	5.37E-04	0.04	7, 8
FD-21	Heat Boiler	Clayton 200 Boiler	7.97 MMBtu/hr	7.97	0.19	0.19	1.60	1.27E-02	0.62	
FD-22	Heat Boiler	Clayton 200 Boiler	7.97 MMBtu/hr	7.97	0.19	0.19	1.60	1.27E-02	0.62	
FD-23	Incinerator	TeamTec/GS500C	276 lb/hr		1.13	0.97	0.69	0.35	4.28	
FD-31	Resupply Ship - docked			4.09	1.27	1.27	18.03	0.83	3.88	
Discoverer total while drilling				90.3	6.03	5.86	88.71	1.31	24.17	

Associated Fleets		Max fuel consumpt. (MMBtu/hr) [1]	Maximum Emissions (lb/hr) [1] PM_{10}	$PM_{2.5}$	NO_x	SO_2	CO	Notes
Ice Breaker								
IB ICE Engines		188.64	47.00	41.50	1,108.42	41.42	148.22	
IB Incinerators	154 lb/hr		1.02	0.70	0.23	0.19	23.10	
Total Ice Breaker		188.64	48.02	42.20	1,108.65	41.62	171.32	
Anchor Handler								
AH ICE Engines		180.16	10.59	10.59	91.20	39.56	148.20	
AH Boiler		4.00	0.10	0.10	0.21	0.90	0.15	
AH Incinerator	151 lb/hr		1.01	0.69	0.38	0.19	22.68	
Total Anchor Handler		184.16	11.69	11.37	91.78	40.65	171.04	
Total Ice Management Fleet		*372.80*	*59.71*	*53.57*	*1,200.44*	*82.26*	*342.36*	
Resupply Ship - in Transit		*44.41*	*20.04*	*16.07*	*265.11*	*9.75*	*34.89*	
OSR Fleet								
OSR Main Ship ICE Propulsion Engines		46.01	0.30	0.30	162.70	0.07	0.87	7
OSR Main Ship ICE Generators		17.99	1.22	0.98	107.40	0.03	1.41	7
OSR Main Ship Incinerator	125 lb/hr		0.83	0.57	0.19	0.16	18.75	
OSR Main Ship Total		64.00	2.35	1.85	270.28	0.26	21.04	
OSR Work Boat ICE Propulsion Engines		12.60	0.31	0.31	18.43	2.55	0.62	
OSR Work Boat ICE Generators		0.25	0.08	0.08	1.11	0.05	0.24	
OSR Work Boats Total		12.85	0.38	0.38	19.54	2.60	0.85	
Total OSR Fleet		*76.85*	*2.74*	*2.23*	*289.82*	*2.85*	*21.89*	
Total Fleet		494.06	82.49	71.88	1,755.37	94.87	399.14	
	Total All	584.38	88.52	77.74	1,844.08	96.18	423.31	

Notes

1 All emissions are the maximum 1-hour values
2 Units FD-1-6 (Generator Engines) instantaneous capacity restriction, SCR NO_x control effectiveness and Oxidation Catalyst reduction efficiencies applied
3 Not used during drilling 0%
4 Any emissions from the propulsion engine associated with travel to and from drill sites (within 25 miles of the sites) will be negligible and are included in the ice management fleet allowance.
5 Unit FD-8 (Emergency Generator) operation assumed for 120 min/week
6 Units FD-9-11 (MLC Compressors) are Tier 3 engines
7 CDPF PM & CO reduction efficiencies applied
8 Unit FD-20 (Logging Winch) is a Tier 2 engine

Values in blue are input.
Values in black are calculated or linked

Air Sciences Inc.	PROJECT TITLE: Shell Offshore, Inc.	BY: S. Pryor	
	PROJECT NO: 180-15-1	PAGE: 2	OF: 21
ENGINEERING CALCULATIONS	SUBJECT: Discoverer Emissions-AK OCS	DATE: September 17, 2009	

Emissions Summary for Screening Modeling Purposes
Base Operating Case [1]

Stack Identifier		Comments	PM_{10} Max 24-hr (lb/hr)	PM_{10} Max 24-hr (g/sec)	$PM_{2.5}$ Max 24-hr (lb/hr)	$PM_{2.5}$ Max 24-hr (g/sec)	NO_x Max 24-hr (lb/hr)	NO_x Max 24-hr (g/sec)	SO_2 Max 24-hr (lb/hr)	SO_2 Max 24-hr (g/sec)
F-D Stack No.										
1	FD-1, 2, 3, 4, 5, 6	Operating at 71%	1.18	0.15	1.18	0.15	4.64	0.59	6.62E-02	8.34E-03
	FD-7	Not used during drilling	0	0	0	0	0	0	0	0
	FD-8	120 min/wk	0.053	0.0067	0.053	0.0067	0.271	0.034	1.22E-04	1.54E-05
2	FD-9, 10, 11	Operating at 100%	0.53	0.07	0.53	0.07	10.66	1.34	1.71E-02	2.16E-03
3	FD-12, 13	Operating at 100%	0.21	0.03	0.21	0.03	10.81	1.36	6.23E-03	7.84E-04
4	FD-16, 17, 18	Operating at 28%	0.14	0.02	0.14	0.02	5.87	0.74	2.83E-03	3.56E-04
5a, 5b	FD-14, 15	Operating at 100%	0.09	0.01	0.09	0.01	12.39	1.56	8.82E-03	1.11E-03
6	FD-21, 22	Operating at 100%	0.38	0.05	0.38	0.05	3.21	0.40	2.54E-02	3.20E-03
7	FD-19, 20 [2]	Operating at 0%	0	0	0	0	0	0	0	0
8	FD-23	Operating at 300 lb/trash per day	0.05	0.01	0.04	0.01	0.03	0.00	0.02	0.00
	FD-31	Operating at 100% of 1 of 2 engines 12 hr/day [3]	0.32	0.04	0.32	0.04	4.51	0.57	0.21	0.03
	Total F-D		**2.95**	**0.37**	**2.94**	**0.37**	**52.40**	**6.60**	**0.35**	**0.044**
Ice Management Fleet										
	Ice Breaker		48.0	6.05	42.2	5.32	1,108.7	139.69	41.62	5.24
	Anchor Handler		11.7	1.47	11.4	1.43	91.8	11.56	40.65	5.12
Resupply - transit		4 hr/trip	3.3	0.42	2.7	0.34	44.2	5.57	1.63	0.20
OSR Main Ship		24 hr/day								
	Propulsion	Operating at 3,000 gal/day	0.1	0.01	0.1	0.01	58.8	7.41	0.03	3.34E-03
	Generators	Operating at 800 gal/day	0.3	0.04	0.2	0.03	26.5	3.34	0.01	8.92E-04
	Incinerator	Operating at 100%	0.8	0.10	0.6	0.07	0.2	0.02	0.16	1.97E-02
			1.2	0.16	0.9	0.12	85.5	10.77	0.19	2.39E-02
OSR Work Boats		24 hr/day								
	Propulsion	Operating at 100%	0.3	0.04	0.3	0.04	18.4	2.32	2.5	0.32
	Generators	Operating at 100%	0.1	0.01	0.1	0.01	1.1	0.14	0.1	6.41E-03
			0.4	0.05	0.4	0.05	19.5	2.46	2.60	0.33
	Total Fleet		**64.7**	**8.1**	**57.6**	**7.3**	**1349.7**	**170.1**	**86.7**	**10.9**
	maximum total when drilling		**67.62**	**8.52**	**60.50**	**7.62**	**1,402.1**	**176.7**	**87.02**	**10.96**

Stack Identifier		Comments	SO_2 Max 1-hr (lb/hr)	SO_2 Max 1-hr (g/sec)	CO Max 1-hr (lb/hr)	CO Max 1-hr (g/sec)
F-D Stack No.						
1	FD-1, 2, 3, 4, 5, 6	Operating at 71%	6.62E-02	8.34E-03	1.66	0.21
	FD-7	Not used during drilling	0	0	0	0
	FD-8	120 min/wk	1.46E-03	1.84E-04	1.79	0.23
2	FD-9, 10, 11	Operating at 100%	1.71E-02	2.16E-03	9.33	1.18
3	FD-12, 13	Operating at 100%	6.23E-03	7.84E-04	0.33	0.04
4	FD-16, 17, 18	Operating at 100%	1.02E-02	1.28E-03	1.18	0.15
5a, 5b	FD-14, 15	Operating at 100%	8.82E-03	1.11E-03	0.26	0.03
6	FD-21, 22	Operating at 100%	2.54E-02	3.20E-03	1.23	0.16
7	FD-19, 20	Operating at 100%	2.13E-03	2.68E-04	0.23	0.03
	FD-23	Operating at 100%	0.35	0.04	4.28	0.54
	FD-31	Operating at 100%	0.83	0.10	3.88	0.49
	Total F-D		**1.31**	**0.165**	**24.17**	**3.05**
Ice Management Fleet						
	Ice Breaker		41.62	5.24	171.32	21.59
	Anchor Handler		40.65	5.12	171.04	21.55
Resupply - transit			9.75	1.23	34.89	4.40
OSR Main Ship						
	Propulsion	Operating at 100%	0.07	0.01	0.87	0.11
	Generators	Operating at 100%	0.03	0.00	1.41	0.18
	Incinerator	Operating at 100%	0.16	0.02	18.75	2.36
			0.26	0.03	21.04	2.65
OSR Work Boats						
	Propulsion	Operating at 100%	2.5	0.32	0.6	0.08
	Generators	Operating at 100%	0.1	0.01	0.2	0.03
			2.60	0.33	0.85	0.11
	Total Fleet		**94.9**	**12.0**	**399.1**	**50.3**
	maximum total when drilling		**96.18**	**12.12**	**423.31**	**53.34**

[1] Base Operating Case: More than one of the two HPU units operating that day (greater than 352 gallons per day), and incineration is limited to 300 lb feed per day.
[2] Units FD-19 & 20 (Logging Winches) cannot operate simultaneously with cementing units, emissions combined with cementing units for 24-hr
[3] 12 hr/day, 1 Generator operating at 100% Ref: Craik, Keith email to R. Steen, 11/11/08

Air Sciences Inc.	PROJECT TITLE: Shell Offshore, Inc.	BY: S. Pryor	
	PROJECT NO: 180-15-1	PAGE: 3	OF: 21
ENGINEERING CALCULATIONS	SUBJECT: Discoverer Emissions-AK OCS	DATE: September 17, 2009	

Emissions Summary for Screening Modeling Purposes
Alternate Operating Scenario #1 [1]

Stack Identifier		Comments	PM_{10} Max 24-hr (lb/hr)	PM_{10} Max 24-hr (g/sec)	$PM_{2.5}$ Max 24-hr (lb/hr)	$PM_{2.5}$ Max 24-hr (g/sec)	NO_x Max 24-hr (lb/hr)	NO_x Max 24-hr (g/sec)	SO_2 Max 24-hr (lb/hr)	SO_2 Max 24-hr (g/sec)
F-D Stack No.										
1	FD-1, 2, 3, 4, 5, 6	Operating at 71%	1.18	0.15	1.18	0.15	4.64	0.59	6.62E-02	8.34E-03
	FD-7	Not used during drilling	0	0	0	0	0	0	0	0
	FD-8	120 min/wk	0.053	0.0067	0.053	0.0067	0.271	0.034	1.22E-04	1.54E-05
2	FD-9, 10, 11	Operating at 100%	0.53	0.07	0.53	0.07	10.66	1.34	1.71E-02	2.16E-03
3	FD-12, 13	Operating at 100% of 1 of 2 engine	0.10	0.01	0.10	0.01	5.41	0.68	3.11E-03	3.92E-04
4	FD-16, 17, 18	Operating at 28%	0.14	0.02	0.14	0.02	5.87	0.74	2.83E-03	3.56E-04
5a, 5b	FD-14, 15	Operating at 100%	0.09	0.01	0.09	0.01	12.39	1.56	8.82E-03	1.11E-03
6	FD-21, 22	Operating at 100%	0.38	0.05	0.38	0.05	3.21	0.40	2.54E-02	3.20E-03
7	FD-19, 20 [2]	Operating at 0%	0	0	0	0	0	0	0	0
8	FD-23	Operating at 800 lb/trash per day	0.14	0.02	0.12	0.01	0.08	0.01	0.04	0.01
	FD-31	Operating at 100% of 1 of 2 engine 12 hr/day [3]	0.32	0.04	0.32	0.04	4.51	0.57	0.21	0.03
	Total F-D		**2.93**	**0.37**	**2.91**	**0.37**	**47.04**	**5.93**	**0.37**	**0.047**
Ice Management Fleet										
	Ice Breaker		48.0	6.05	42.2	5.32	1,108.7	139.69	41.62	5.24
	Anchor Handler		11.7	1.47	11.4	1.43	91.8	11.56	40.65	5.12
Resupply - transit		4 hr/trip	3.3	0.42	2.7	0.34	44.2	5.57	1.63	0.20
OSR Main Ship		24 hr/day								
	Propulsion	Operating at 3,000 gal/day	0.1	0.01	0.1	0.01	58.8	7.41	0.03	3.34E-03
	Generators	Operating at 800 gal/day	0.3	0.04	0.2	0.03	26.5	3.34	0.01	8.92E-04
	Incinerator	Operating at 100%	0.8	0.10	0.6	0.07	0.2	0.02	0.16	1.97E-02
			1.2	0.16	0.9	0.12	85.5	10.77	0.19	2.39E-02
OSR Work Boats		24 hr/day								
	Propulsion	Operating at 100%	0.3	0.04	0.3	0.04	18.4	2.32	2.5	0.32
	Generators	Operating at 100%	0.1	0.01	0.1	0.01	1.1	0.14	0.1	6.41E-03
			0.4	0.05	0.4	0.05	19.5	2.46	2.60	0.33
	Total Fleet		**64.7**	**8.1**	**57.6**	**7.3**	**1349.7**	**170.1**	**86.7**	**10.9**
	maximum total when drilling		**67.61**	**8.52**	**60.47**	**7.62**	**1,396.7**	**176.0**	**87.04**	**10.97**

Stack Identifier		Comments	SO_2 Max 1-hr (lb/hr)	SO_2 Max 1-hr (g/sec)	CO Max 1-hr (lb/hr)	CO Max 1-hr (g/sec)
F-D Stack No.						
1	FD-1, 2, 3, 4, 5, 6	Operating at 71%	6.62E-02	8.34E-03	1.66	0.21
	FD-7	Not used during drilling	0	0	0	0
	FD-8	120 min/wk	1.46E-03	1.84E-04	1.79	0.23
2	FD-9, 10, 11	Operating at 100%	1.71E-02	2.16E-03	9.33	1.18
3	FD-12, 13	Operating at 100%	6.23E-03	7.84E-04	0.33	0.04
4	FD-16, 17, 18	Operating at 100%	1.02E-02	1.28E-03	1.18	0.15
5a, 5b	FD-14, 15	Operating at 100%	8.82E-03	1.11E-03	0.26	0.03
6	FD-21, 22	Operating at 100%	2.54E-02	3.20E-03	1.23	0.16
7	FD-19, 20	Operating at 100%	2.13E-03	2.68E-04	0.23	0.03
	FD-23	Operating at 100%	0.35	0.04	4.28	0.54
	FD-31	Operating at 100%	0.83	0.10	3.88	0.49
	Total F-D		**1.31**	**0.165**	**24.17**	**3.05**
Ice Management Fleet						
	Ice Breaker		41.62	5.24	171.32	21.59
	Anchor Handler		40.65	5.12	171.04	21.55
Resupply - transit			9.75	1.23	34.89	4.40
OSR Main Ship						
	Propulsion	Operating at 100%	0.07	0.01	0.87	0.11
	Generators	Operating at 100%	0.03	0.00	1.41	0.18
	Incinerator	Operating at 100%	0.16	0.02	18.75	2.36
			0.26	0.03	21.04	2.65
OSR Work Boats						
	Propulsion	Operating at 100%	2.5	0.32	0.6	0.08
	Generators	Operating at 100%	0.1	0.01	0.2	0.03
			2.60	0.33	0.85	0.11
	Total Fleet		**94.9**	**12.0**	**399.1**	**50.3**
	maximum total when drilling		**96.18**	**12.12**	**423.31**	**53.34**

[1] Operating Scenario #1: More than no use but less than one of the two HPU units operating that day (more than zero but less than or equal to 352 gallons per day), and incineration is limited to 800 lb feed per day.

[2] Units FD-19 & 20 (Logging Winches) cannot operate simultaneously with cementing units, emissions combined with cementing units for 24-hr

[3] 12 hr/day, 1 Generator operating at 100% Ref: Craik, Keith email to R. Steen, 11/11/08

Air Sciences Inc.	PROJECT TITLE: Shell Offshore, Inc.	BY: S. Pryor	
	PROJECT NO: 180-15-1	PAGE: 4	OF: 21
ENGINEERING CALCULATIONS	SUBJECT: Discoverer Emissions-AK OCS	DATE: September 17, 2009	

Emissions Summary for Screening Modeling Purposes
Alternate Operating Scenario #2 [1]

Stack Identifier		Comments	PM_{10} Max 24-hr (lb/hr)	PM_{10} Max 24-hr (g/sec)	$PM_{2.5}$ Max 24-hr (lb/hr)	$PM_{2.5}$ Max 24-hr (g/sec)	NO_x Max 24-hr (lb/hr)	NO_x Max 24-hr (g/sec)	SO_2 Max 24-hr (lb/hr)	SO_2 Max 24-hr (g/sec)
F-D Stack No.										
1	FD-1, 2, 3, 4, 5, 6	Operating at 71%	1.18	0.15	1.18	0.15	4.64	0.59	6.62E-02	8.34E-03
	FD-7	Not used during drilling	0	0	0	0	0	0	0	0
	FD-8	120 min/wk	0.053	0.0067	0.053	0.0067	0.271	0.034	1.22E-04	1.54E-05
2	FD-9, 10, 11	Operating at 100%	0.53	0.07	0.53	0.07	10.66	1.34	1.71E-02	2.16E-03
3	FD-12, 13	Operating at 0%	0.00	0.00	0.00	0.00	0.00	0.00	0.00E+00	0.00E+00
4	FD-16, 17, 18	Operating at 28%	0.14	0.02	0.14	0.02	5.87	0.74	2.83E-03	3.56E-04
5a, 5b	FD-14, 15	Operating at 100%	0.09	0.01	0.09	0.01	12.39	1.56	8.82E-03	1.11E-03
6	FD-21, 22	Operating at 100%	0.38	0.05	0.38	0.05	3.21	0.40	2.54E-02	3.20E-03
7	FD-19, 20 [2]	Operating at 0%	0	0	0	0	0	0	0	0
8	FD-23	Operating at 1,300 lb/trash per day	0.22	0.03	0.19	0.02	0.14	0.02	0.07	0.01
	FD-31	Operating at 100% of 1 of 2 engine 12 hr/day [3]	0.32	0.04	0.32	0.04	4.51	0.57	0.21	0.03
	Total F-D		**2.91**	**0.37**	**2.88**	**0.36**	**41.69**	**5.25**	**0.39**	**0.050**
Ice Management Fleet										
	Ice Breaker		48.0	6.05	42.2	5.32	1,108.7	139.69	41.62	5.24
	Anchor Handler		11.7	1.47	11.4	1.43	91.8	11.56	40.65	5.12
Resupply - transit		4 hr/trip	3.3	0.42	2.7	0.34	44.2	5.57	1.63	0.20
OSR Main Ship		24 hr/day								
	Propulsion	Operating at 3,000 gal/day	0.1	0.01	0.1	0.01	58.8	7.41	0.03	3.34E-03
	Generators	Operating at 800 gal/day	0.3	0.04	0.2	0.03	26.5	3.34	0.01	8.92E-04
	Incinerator	Operating at 100%	0.8	0.10	0.6	0.07	0.2	0.02	0.16	1.97E-02
			1.2	0.16	0.9	0.12	85.5	10.77	0.19	2.39E-02
OSR Work Boats		24 hr/day								
	Propulsion	Operating at 100%	0.3	0.04	0.3	0.04	18.4	2.32	2.5	0.32
	Generators	Operating at 100%	0.1	0.01	0.1	0.01	1.1	0.14	0.1	6.41E-03
			0.4	0.05	0.4	0.05	19.5	2.46	2.60	0.33
	Total Fleet		**64.7**	**8.1**	**57.6**	**7.3**	**1349.7**	**170.1**	**86.7**	**10.9**
	maximum total when drilling		**67.59**	**8.52**	**60.43**	**7.61**	**1,391.4**	**175.3**	**87.07**	**10.97**

Stack Identifier		Comments	SO_2 Max 1-hr (lb/hr)	SO_2 Max 1-hr (g/sec)	CO Max 1-hr (lb/hr)	CO Max 1-hr (g/sec)
F-D Stack No.						
1	FD-1, 2, 3, 4, 5, 6	Operating at 71%	6.62E-02	8.34E-03	1.66	0.21
	FD-7	Not used during drilling	0	0	0	0
	FD-8	120 min/wk	1.46E-03	1.84E-04	1.79	0.23
2	FD-9, 10, 11	Operating at 100%	1.71E-02	2.16E-03	9.33	1.18
3	FD-12, 13	Operating at 0%	0.00E+00	0.00E+00	0.00	0.00
4	FD-16, 17, 18	Operating at 100%	1.02E-02	1.28E-03	1.18	0.15
5a, 5b	FD-14, 15	Operating at 100%	8.82E-03	1.11E-03	0.26	0.03
6	FD-21, 22	Operating at 100%	2.54E-02	3.20E-03	1.23	0.16
7	FD-19, 20	Operating at 100%	2.13E-03	2.68E-04	0.23	0.03
	FD-23	Operating at 100%	0.35	0.04	4.28	0.54
	FD-31	Operating at 100%	0.83	0.10	3.88	0.49
	Total F-D		**1.30**	**0.164**	**23.84**	**3.00**
Ice Management Fleet						
	Ice Breaker		41.62	5.24	171.32	21.59
	Anchor Handler		40.65	5.12	171.04	21.55
Resupply - transit			9.75	1.23	34.89	4.40
OSR Main Ship						
	Propulsion	Operating at 100%	0.07	0.01	0.87	0.11
	Generators	Operating at 100%	0.03	0.00	1.41	0.18
	Incinerator	Operating at 100%	0.16	0.02	18.75	2.36
			0.26	0.03	21.04	2.65
OSR Work Boats						
	Propulsion	Operating at 100%	2.5	0.32	0.6	0.08
	Generators	Operating at 100%	0.1	0.01	0.2	0.03
			2.60	0.33	0.85	0.11
	Total Fleet		**94.9**	**12.0**	**399.1**	**50.3**
	maximum total when drilling		**96.17**	**12.12**	**422.98**	**53.29**

[1] Operating Scenario #2: No HPU use that day and incineration is limited to 1300 lb feed per day.
[2] Units FD-19 & 20 (Logging Winches) cannot operate simultaneously with cementing units, emissions combined with cementing units for 24-hr
[3] 12 hr/day, 1 Generator operating at 100% Ref: Craik, Keith email to R. Steen, 11/11/08

Source Release Parameters for Screening Modeling Purposes

Rig Sources

Source Description	Model Src ID	Source Type	Vertical or Horizontal?	Source Location X (m)	Source Location Y (m)	Rel Ht. [1] (m)	Stk Dia. (m)	Exit Temp. (deg K)	Exit Vel. (m/s)
Stack #1: 6 Main Drill Engines [2]	MAINENGS	POINT	Vertical	154.1	55.2	12.83	0.32	710	32.9
Stack #2: 3 MLC Compressors [3]	COMPENGS	POINT	Vertical	102.0	63.0	8.53	0.21	700	40.0
Stack #3: 2 HPU Engines [3]	HPPENGS	POINT	Vertical	79.0	65.0	6.10	0.18	700	40.0
Stack #4: 3 Cementing Units [4]	CEMENT	POINT	Vertical	95.0	67.0	6.10	0.18	800	46.6
Stack #5a: Crane Engine (port) [3]	CRANE_PT	POINT	Vertical	114	66.0	13.72	0.25	672	20.1
Stack #5b: Crane Engine (stbd) [3]	CRANE_SB	POINT	Vertical	70.1	43.7	13.72	0.25	672	20.1
Stack #6: 2 Heat Boilers [5]	HEATBOIL	POINT	Vertical	154.3	52.2	12.83	0.46	478	7.3
Stack #7: 2 Logging Winches [3]	LOGWNCH	POINT	vertical	120.7	55.2	8.53	0.10	711	53.0
Stack #8: 1 Incinerator [3]	INCIN_D	POINT	Vertical	61.0	65.0	2.44	0.46	623	10.0

[1] Above main deck which is approximately 4.57 meters (15 feet) above the water surface.
[2] D399 Caterpillar Engine Data Sheet, 05/95 & D399 Stack Parameters Sheet
[3] Kulluk Permit R100CS-AK-07-01, June 2008
[4] Detroit Diesel Allison, Basic Engine Performance Model: 8V-71N, 10/15/81 & Detroit/8V-71N Stack Parameters Sheet; diameter from Kulluk Permit R100CS-AK-07-01, June 2008
[5] Clayton Industries, 8/2001

Fleet Sources

Source Description	Mod. Src. ID	Source Type	Ship Type	Stack Orientation	Rel. Ht. (m)	Stack Dia. [1] (m)	Exit Temp. (deg K)	Exit Vel. [1] (m/s)
Resupply [2]	KILABUK-T	POINT	Resupply	Vertical	15.24	0.18	700	40.0
Oil Spill Response (Kvichaks) [3a]	OILSPL3	POINT/VOLUMES	OSR Fleet (Kvichaks)	Vertical	3.35	0.15	694	32.9
Oil Spill Response (Nanuq) [3b]	OILSPL4	POINT/VOLUMES	OSR Fleet (Nanuq)	Vertical	15.24	0.76	644	40.0
Fennica/Nordica [4]	FENNICA2	POINT/VOLUMES	Secondary	Vertical	32.00	0.80	655	38.4
Vladimir Ignatjuk [5]	VLADIGN2	POINT/VOLUMES	Primary, Secondary	Vertical	24.38	0.79	668	33.2
Talagy [6]	TALAGY	POINT/VOLUMES	Primary, Secondary	Vertical	25.91	0.80	594	43.7
Tor Viking II [7]	TOR_H	POINT/VOLUMES	Secondary	Horizontal	28.96	110.38	579	0.001
Odin Viking II [8]	ODIN_H	POINT/VOLUMES	Primary	Horizontal	28.96	94.61	579	0.001
Balder Viking [9]	BALD_H	POINT/VOLUMES	Secondary	Horizontal	28.96	110.38	579	0.001
Vidar Viking [10]	VIDAR_H	POINT/VOLUMES	Secondary	Horizontal	28.96	110.38	579	0.001

Fleet Sources, continued

Source Description	Source	Propulsion Engine	Max. Engine (kW)
Resupply [2]	Engine	---	---
Oil Spill Response (Kvichaks) [3a]	Engine	---	---
Oil Spill Response (Nanuq) [3b]	Engine	---	---
Fennica/Nordica [4]	Engine	2X Wartsila 16V32, 2X 12V32	6,000
Vladimir Ignatjuk [5]	Engine	4X Stork Werkspoor 8TM410	4,325
Talagy [6]	Engine	Sulzer 12 ZV 40/48	6,264
Tor Viking II [7]	Engine	2X MaK 8M32C, 2X 6M32C	3,840
Odin Viking II [8]	Engine	4X MaK 6M32C	2,880
Balder Viking [9]	Engine	2X MaK 8M32C, 2X 6M32C	3,840
Vidar Viking [10]	Engine	2X MaK 8M32C, 2X 6M32C	3,840

[1] Horizontal stacks adjusted per Alaska DEC recommendations to impeded vertical momentum (0.001 m/sec exit velocity), while allowing credit for buoyant rise from hot stacks. Adjustment to diameter is: 31.6 * (actual diameter in meters) * (square root of actual exit velocity in units of meters/sec).
[2] Resupply ship (Jim Kilabuk) configuration is taken from the Kulluk Permit R100CS-AK-07-01, June 2008.
[3a] OSR fleet configuration for the Kvichaks (34-foot boats) is from the Firebaugh Technical Memo.
[3b] OSR fleet configuration for the Nanuq is from the Firebaugh Technical Memo.
[4] Alaska Source Testing, LLC. Summary of Test Results Fennica/Nordica Icebreaker. June 28, 2007.
[5] TRC Environmental Corp. Emission Test Report - Vladimir Ignatjuk, Project No.150614. July 12, 2007.
[6] FEMCO-Management. Safety Quality Expertise – Fleet/AHTS "Talagy".
[7] TRC Environmental Corp. Emission Test Report - Tor Viking II, Project No.150614. July 12, 2007.
[8] Viking Supply Ships AS Shipowners. AHTS Odin Viking II - Main Characteristics.
[9] Viking Supply Ships AS Shipowners. AHTS/Icebreaker Balder Viking - Main Characteristics.
[10] Viking Supply Ships AS Shipowners. AHTS/Icebreaker Vidar Viking - Main Characteristics.

Air Sciences Inc.	PROJECT TITLE: Shell Offshore, Inc.	BY: Tim Martin	
	PROJECT NO: 180-15-1	PAGE: 6	OF: 21
ENGINEERING CALCULATIONS	SUBJECT: Discoverer Emissions-AK OCS	DATE: September 17, 2009	

Fleet Sources, Stack Parameters for Loads Analysis - SCREEN3

Source Description	Load	Mod. Src. ID	Source Type	Stack Orientation	Rel. Ht. (m)	Stack Dia. [1] (m)	Exit Temp. (deg K)	Exit Vel. [1] (m/s)
Vladimir Ignatjuk [3]	80%	VLD2_080	POINT	Vertical	24.38	0.79	668	33.2
Vladimir Ignatjuk [3]	57%	VLD2_057	POINT	Vertical	24.38	0.79	638	25.9
Vladimir Ignatjuk [3]	35%	VLD2_035	POINT	Vertical	24.38	0.79	581	16.3
Fennica/Nordica [4]	80%	FEN2_080	POINT	Vertical	32.00	0.80	655	38.4
Fennica/Nordica [4]	57%	FEN2_057	POINT	Vertical	32.00	0.80	633	30.0
Fennica/Nordica [4]	35%	FEN2_035	POINT	Vertical	32.00	0.80	637	20.3
Tor Viking II [5]	80%	TORH_080	POINT	Horizontal	28.96	110.4	579	0.001
Tor Viking II [5]	57%	TORH_057	POINT	Horizontal	28.96	101.6	607	0.001
Tor Viking II [5]	35%	TORH_035	POINT	Horizontal	28.96	74.7	630	0.001

Fleet Sources, Inputs and Outputs for Loads Analysis - ISC-PRIME

Source Description	Actual NOx Emissions (lb/hr)	Normalized NOx Emissions (g/sec) [6]	Lowest Final Plume Ht. (m) [2]	Sigma Y (m)	Sigma Z [2] (m)	Max. ISC-PRIME Impact (ug/m3)	Load
Vladimir Ignatjuk [3]	83.6	1.000	24.43	46.51	9.21	**110.7**	**80%**
Vladimir Ignatjuk [3]	68.4	0.818	24.42	46.51	9.21	90.6	57%
Vladimir Ignatjuk [3]	29.6	0.354	24.40	46.51	9.21	39.3	35%
Fennica/Nordica [4]	96.5	1.000	32.02	46.51	12.76	**78.4**	**80%**
Fennica/Nordica [4]	66.6	0.690	32.02	46.51	12.76	54.1	57%
Fennica/Nordica [4]	49.0	0.508	32.01	46.51	12.76	39.8	35%
Tor Viking II [5]	13.8	1.000	28.97	46.51	11.34	**89.4**	**80%**
Tor Viking II [5]	5.16	0.374	28.97	46.51	11.34	33.4	57%
Tor Viking II [5]	2.61	0.189	28.97	46.51	11.34	16.9	35%

[1] Horizontal stacks adjusted per Alaska DEC recommendations to impeded vertical momentum (0.001 m/sec exit velocity), while allowing credit for buoyant rise from hot stacks. Adjustment to diameter is: 31.6 * (actual diameter in meters) * (square root of actual exit velocity in units of meters/sec).

[2] From SCREEN3 model output.

[3] TRC Environmental Corp. Emission Test Report - Vladimir Ignatjuk, Project No.150614. July 12, 2007.

[4] Alaska Source Testing, LLC. Summary of Test Results Fennica/Nordica Icebreaker. June 28, 2007.

[5] TRC Environmental Corp. Emission Test Report - Tor Viking II, Project No.150614. July 12, 2007.

[6] Normalized emissions are based on the emissions at each load point (100%, 75%, 50%, etc.) divided by the emissions from the maximum load point (100%).

Stack Parameters for Loads Analysis [2]

Source Description	Load	Mod. Src. ID	Source Type	Stack Orientation	Rel. Ht. [1] (m)	Stack Dia. (m)	Exit Temp. (deg K)	Exit Vel. (m/s)
Stack #1: 6 Main Drill Engines	100%	MAIN_100	POINT	vertical	12.83	0.32	710	32.9
Stack #1: 6 Main Drill Engines	75%	MAIN_075	POINT	vertical	12.83	0.32	663	26.4
Stack #1: 6 Main Drill Engines	50%	MAIN_050	POINT	vertical	12.83	0.32	606	21.0

Inputs and Outputs for Loads Analysis (NOx and PM_{10}) - ISC-PRIME [2]

Source Description	Actual Emissions (g/hr)		Normalized Emissions (g/sec) [3]		Max. ISC-PRIME Impact (ug/m3)		Load
	NO_x	PM_{10}	NO_x	PM_{10}	NO_x	PM_{10}	
Stack #1: 6 Main Drill Engines	7993.9	251.2	1.000	1.000	**64.7**	**64.7**	**100%**
Stack #1: 6 Main Drill Engines	6159.8	133.8	0.771	0.533	56.5	39.0	75%
Stack #1: 6 Main Drill Engines	4360.5	79.1	0.545	0.315	45.6	26.4	50%

Inputs and Outputs for Loads Analysis (CO and SO_2) - ISC-PRIME [2]

Source Description	Actual Emissions (g/hr)		Normalized Emissions (g/sec)		Max. ISC-PRIME Impact (ug/m3)		Load
	CO	SO_2	CO	SO_2	CO	SO_2	
Stack #1: 6 Main Drill Engines	882.7	7.0	1.000	1.000	**64.7**	**64.7**	**100%**
Stack #1: 6 Main Drill Engines	710.1	5.1	0.804	0.730	58.9	53.5	75%
Stack #1: 6 Main Drill Engines	622.6	3.5	0.705	0.498	59.0	41.7	50%

[1] Above main deck which is approximately 4.57 meters (15 feet) above the water surface.

[2] Caterpillar D399 Engine Data Sheet, 05/95

[3] Normalized emissions are based on the emissions at each load point (100%, 75%, 50%, etc.) divided by the emissions from the maximum load point (100%).

Source Release Parameters for Screening Modeling Purposes

Fleet Sources

Source Description	Model Src ID	Source Type	Source Location X (m)	Source Location Y (m)	Rel Ht. (m)	Sigma-Y (m)	Sigma-Z (m)
Oil Spill Response Ships k,n *	OILSP01k,n	VOLUME	-1984.3	980.0	3.38, 17.55	23.26	1.42, 6.38
Oil Spill Response Ships k,n *	OILSP02k,n	VOLUME	-1984.3	930.0	3.38, 17.55	23.26	1.42, 6.38
Oil Spill Response Ships k,n *	OILSP03k,n	VOLUME	-1984.3	880.0	3.38, 17.55	23.26	1.42, 6.38
Oil Spill Response Ships k,n *	OILSP04k,n	VOLUME	-1984.3	830.0	3.38, 17.55	23.26	1.42, 6.38
Oil Spill Response Ships k,n *	OILSP05k,n	VOLUME	-1984.3	780.0	3.38, 17.55	23.26	1.42, 6.38
Oil Spill Response Ships k,n *	OILSP06k,n	VOLUME	-1984.3	730.0	3.38, 17.55	23.26	1.42, 6.38
Oil Spill Response Ships k,n *	OILSP07k,n	VOLUME	-1984.3	680.0	3.38, 17.55	23.26	1.42, 6.38
Oil Spill Response Ships k,n *	OILSP08k,n	VOLUME	-1984.3	630.0	3.38, 17.55	23.26	1.42, 6.38
Oil Spill Response Ships k,n *	OILSP09k,n	VOLUME	-1984.3	580.0	3.38, 17.55	23.26	1.42, 6.38
Oil Spill Response Ships k,n *	OILSP10k,n	VOLUME	-1984.3	530.0	3.38, 17.55	23.26	1.42, 6.38
Oil Spill Response Ships k,n *	OILSP11k,n	VOLUME	-1984.3	480.0	3.38, 17.55	23.26	1.42, 6.38
Oil Spill Response Ships k,n *	OILSP12k,n	VOLUME	-1984.3	430.0	3.38, 17.55	23.26	1.42, 6.38
Oil Spill Response Ships k,n *	OILSP13k,n	VOLUME	-1984.3	380.0	3.38, 17.55	23.26	1.42, 6.38
Oil Spill Response Ships k,n *	OILSP14k,n	VOLUME	-1984.3	330.0	3.38, 17.55	23.26	1.42, 6.38
Oil Spill Response Ships k,n *	OILSP15k,n	VOLUME	-1984.3	280.0	3.38, 17.55	23.26	1.42, 6.38
Oil Spill Response Ships k,n *	OILSP16k,n	VOLUME	-1984.3	230.0	3.38, 17.55	23.26	1.42, 6.38
Oil Spill Response Ships k,n *	OILSP17k,n	VOLUME	-1984.3	180.0	3.38, 17.55	23.26	1.42, 6.38
Oil Spill Response Ships k,n *	OILSP18k,n	VOLUME	-1984.3	130.0	3.38, 17.55	23.26	1.42, 6.38
Oil Spill Response Ships k,n *	OILSP19k,n	VOLUME	-1984.3	80.0	3.38, 17.55	23.26	1.42, 6.38
Oil Spill Response Ships k,n *	OILSP20k,n	VOLUME	-1984.3	30.0	3.38, 17.55	23.26	1.42, 6.38
Oil Spill Response Ships k,n *	OILSP21k,n	VOLUME	-1984.3	-20.0	3.38, 17.55	23.26	1.42, 6.38
Oil Spill Response Ships k,n *	OILSP22k,n	VOLUME	-1984.3	-70.0	3.38, 17.55	23.26	1.42, 6.38
Oil Spill Response Ships k,n *	OILSP23k,n	VOLUME	-1984.3	-120.0	3.38, 17.55	23.26	1.42, 6.38
Oil Spill Response Ships k,n *	OILSP24k,n	VOLUME	-1984.3	-170.0	3.38, 17.55	23.26	1.42, 6.38
Oil Spill Response Ships k,n *	OILSP25k,n	VOLUME	-1984.3	-220.0	3.38, 17.55	23.26	1.42, 6.38
Oil Spill Response Ships k,n *	OILSP26k,n	VOLUME	-1984.3	-270.0	3.38, 17.55	23.26	1.42, 6.38
Oil Spill Response Ships k,n *	OILSP27k,n	VOLUME	-1984.3	-320.0	3.38, 17.55	23.26	1.42, 6.38
Oil Spill Response Ships k,n *	OILSP28k,n	VOLUME	-1984.3	-370.0	3.38, 17.55	23.26	1.42, 6.38
Oil Spill Response Ships k,n *	OILSP29k,n	VOLUME	-1984.3	-420.0	3.38, 17.55	23.26	1.42, 6.38
Oil Spill Response Ships k,n *	OILSP30k,n	VOLUME	-1984.3	-470.0	3.38, 17.55	23.26	1.42, 6.38
Oil Spill Response Ships k,n *	OILSP31k,n	VOLUME	-1984.3	-520.0	3.38, 17.55	23.26	1.42, 6.38
Oil Spill Response Ships k,n *	OILSP32k,n	VOLUME	-1984.3	-570.0	3.38, 17.55	23.26	1.42, 6.38
Oil Spill Response Ships k,n *	OILSP33k,n	VOLUME	-1984.3	-620.0	3.38, 17.55	23.26	1.42, 6.38
Oil Spill Response Ships k,n *	OILSP34k,n	VOLUME	-1984.3	-670.0	3.38, 17.55	23.26	1.42, 6.38
Oil Spill Response Ships k,n *	OILSP35k,n	VOLUME	-1984.3	-720.0	3.38, 17.55	23.26	1.42, 6.38
Oil Spill Response Ships k,n *	OILSP36k,n	VOLUME	-1984.3	-770.0	3.38, 17.55	23.26	1.42, 6.38
Oil Spill Response Ships k,n *	OILSP37k,n	VOLUME	-1984.3	-820.0	3.38, 17.55	23.26	1.42, 6.38
Oil Spill Response Ships k,n *	OILSP38k,n	VOLUME	-1984.3	-870.0	3.38, 17.55	23.26	1.42, 6.38
Oil Spill Response Ships k,n *	OILSP39k,n	VOLUME	-1984.3	-920.0	3.38, 17.55	23.26	1.42, 6.38
Oil Spill Response Ships k,n *	OILSP40k,n	VOLUME	-1984.3	-970.0	3.38, 17.55	23.26	1.42, 6.38
Secondary Ice Management Fleet	BRK_B01	VOLUME	1222.3	2405.0	25.22	46.51	9.21
Secondary Ice Management Fleet	BRK_B02	VOLUME	1222.3	2305.0	25.22	46.51	9.21
Secondary Ice Management Fleet	BRK_B03	VOLUME	1222.3	2205.0	25.22	46.51	9.21
Secondary Ice Management Fleet	BRK_B04	VOLUME	1222.3	2105.0	25.22	46.51	9.21
Secondary Ice Management Fleet	BRK_B05	VOLUME	1222.3	2005.0	25.22	46.51	9.21
Secondary Ice Management Fleet	BRK_B06	VOLUME	1222.3	1905.0	25.22	46.51	9.21
Secondary Ice Management Fleet	BRK_B07	VOLUME	1222.3	1805.0	25.22	46.51	9.21
Secondary Ice Management Fleet	BRK_B08	VOLUME	1222.3	1705.0	25.22	46.51	9.21
Secondary Ice Management Fleet	BRK_B09	VOLUME	1222.3	1605.0	25.22	46.51	9.21
Secondary Ice Management Fleet	BRK_B10	VOLUME	1222.3	1505.0	25.22	46.51	9.21
Secondary Ice Management Fleet	BRK_B11	VOLUME	1222.3	1405.0	25.22	46.51	9.21
Secondary Ice Management Fleet	BRK_B12	VOLUME	1222.3	1305.0	25.22	46.51	9.21
Secondary Ice Management Fleet	BRK_B13	VOLUME	1222.3	1205.0	25.22	46.51	9.21
Secondary Ice Management Fleet	BRK_B14	VOLUME	1222.3	1105.0	25.22	46.51	9.21
Secondary Ice Management Fleet	BRK_B15	VOLUME	1222.3	1005.0	25.22	46.51	9.21
Secondary Ice Management Fleet	BRK_B16	VOLUME	1222.3	905.0	25.22	46.51	9.21
Secondary Ice Management Fleet	BRK_B17	VOLUME	1222.3	805.0	25.22	46.51	9.21
Secondary Ice Management Fleet	BRK_B18	VOLUME	1222.3	705.0	25.22	46.51	9.21
Secondary Ice Management Fleet	BRK_B19	VOLUME	1222.3	605.0	25.22	46.51	9.21
Secondary Ice Management Fleet	BRK_B20	VOLUME	1222.3	505.0	25.22	46.51	9.21
Secondary Ice Management Fleet	BRK_B21	VOLUME	1222.3	405.0	25.22	46.51	9.21
Secondary Ice Management Fleet	BRK_B22	VOLUME	1222.3	305.0	25.22	46.51	9.21
Secondary Ice Management Fleet	BRK_B23	VOLUME	1222.3	205.0	25.22	46.51	9.21
Secondary Ice Management Fleet	BRK_B24	VOLUME	1222.3	105.0	25.22	46.51	9.21
Secondary Ice Management Fleet	BRK_B25	VOLUME	1222.3	5.0	25.22	46.51	9.21

* Each type of oil spill response ship is explicitly modeled. k denotes the Kvichaks (34-foot boats) and n denotes the Nanuq.

Source Release Parameters for Screening Modeling Purposes, contd.

Fleet Sources

Source Description	Model Src ID	Source Type	Source Location X (m)	Source Location Y (m)	Rel Ht. (m)	Sigma-Y (m)	Sigma-Z (m)
Secondary Ice Management Fleet	BRK_B26	VOLUME	1222.3	-95.0	25.22	46.51	9.21
Secondary Ice Management Fleet	BRK_B27	VOLUME	1222.3	-195.0	25.22	46.51	9.21
Secondary Ice Management Fleet	BRK_B28	VOLUME	1222.3	-295.0	25.22	46.51	9.21
Secondary Ice Management Fleet	BRK_B29	VOLUME	1222.3	-395.0	25.22	46.51	9.21
Secondary Ice Management Fleet	BRK_B30	VOLUME	1222.3	-495.0	25.22	46.51	9.21
Secondary Ice Management Fleet	BRK_B31	VOLUME	1222.3	-595.0	25.22	46.51	9.21
Secondary Ice Management Fleet	BRK_B32	VOLUME	1222.3	-695.0	25.22	46.51	9.21
Secondary Ice Management Fleet	BRK_B33	VOLUME	1222.3	-795	25.22	46.51	9.21
Secondary Ice Management Fleet	BRK_B34	VOLUME	1222.3	-895	25.22	46.51	9.21
Secondary Ice Management Fleet	BRK_B35	VOLUME	1222.3	-995	25.22	46.51	9.21
Secondary Ice Management Fleet	BRK_B36	VOLUME	1222.3	-1095	25.22	46.51	9.21
Secondary Ice Management Fleet	BRK_B37	VOLUME	1222.3	-1195	25.22	46.51	9.21
Secondary Ice Management Fleet	BRK_B38	VOLUME	1222.3	-1295	25.22	46.51	9.21
Secondary Ice Management Fleet	BRK_B39	VOLUME	1222.3	-1395	25.22	46.51	9.21
Secondary Ice Management Fleet	BRK_B40	VOLUME	1222.3	-1495	25.22	46.51	9.21
Secondary Ice Management Fleet	BRK_B41	VOLUME	1222.3	-1595	25.22	46.51	9.21
Secondary Ice Management Fleet	BRK_B42	VOLUME	1222.3	-1695	25.22	46.51	9.21
Secondary Ice Management Fleet	BRK_B43	VOLUME	1222.3	-1795	25.22	46.51	9.21
Secondary Ice Management Fleet	BRK_B44	VOLUME	1222.3	-1895	25.22	46.51	9.21
Secondary Ice Management Fleet	BRK_B45	VOLUME	1222.3	-1995	25.22	46.51	9.21
Secondary Ice Management Fleet	BRK_B46	VOLUME	1222.3	-2095	25.22	46.51	9.21
Secondary Ice Management Fleet	BRK_B47	VOLUME	1222.3	-2195	25.22	46.51	9.21
Secondary Ice Management Fleet	BRK_B48	VOLUME	1222.3	-2295	25.22	46.51	9.21
Primary Ice Management Fleet	BRK_A01	VOLUME	5022.3	4805	25.22	46.51	9.21
Primary Ice Management Fleet	BRK_A02	VOLUME	5022.3	4705	25.22	46.51	9.21
Primary Ice Management Fleet	BRK_A03	VOLUME	5022.3	4605	25.22	46.51	9.21
Primary Ice Management Fleet	BRK_A04	VOLUME	5022.3	4505	25.22	46.51	9.21
Primary Ice Management Fleet	BRK_A05	VOLUME	5022.3	4405	25.22	46.51	9.21
Primary Ice Management Fleet	BRK_A06	VOLUME	5022.3	4305	25.22	46.51	9.21
Primary Ice Management Fleet	BRK_A07	VOLUME	5022.3	4205	25.22	46.51	9.21
Primary Ice Management Fleet	BRK_A08	VOLUME	5022.3	4105	25.22	46.51	9.21
Primary Ice Management Fleet	BRK_A09	VOLUME	5022.3	4005	25.22	46.51	9.21
Primary Ice Management Fleet	BRK_A10	VOLUME	5022.3	3905	25.22	46.51	9.21
Primary Ice Management Fleet	BRK_A11	VOLUME	5022.3	3805	25.22	46.51	9.21
Primary Ice Management Fleet	BRK_A12	VOLUME	5022.3	3705	25.22	46.51	9.21
Primary Ice Management Fleet	BRK_A13	VOLUME	5022.3	3605	25.22	46.51	9.21
Primary Ice Management Fleet	BRK_A14	VOLUME	5022.3	3505	25.22	46.51	9.21
Primary Ice Management Fleet	BRK_A15	VOLUME	5022.3	3405	25.22	46.51	9.21
Primary Ice Management Fleet	BRK_A16	VOLUME	5022.3	3305	25.22	46.51	9.21
Primary Ice Management Fleet	BRK_A17	VOLUME	5022.3	3205	25.22	46.51	9.21
Primary Ice Management Fleet	BRK_A18	VOLUME	5022.3	3105	25.22	46.51	9.21
Primary Ice Management Fleet	BRK_A19	VOLUME	5022.3	3005	25.22	46.51	9.21
Primary Ice Management Fleet	BRK_A20	VOLUME	5022.3	2905	25.22	46.51	9.21
Primary Ice Management Fleet	BRK_A21	VOLUME	5022.3	2805	25.22	46.51	9.21
Primary Ice Management Fleet	BRK_A22	VOLUME	5022.3	2705	25.22	46.51	9.21
Primary Ice Management Fleet	BRK_A23	VOLUME	5022.3	2605	25.22	46.51	9.21
Primary Ice Management Fleet	BRK_A24	VOLUME	5022.3	2505	25.22	46.51	9.21
Primary Ice Management Fleet	BRK_A25	VOLUME	5022.3	2405	25.22	46.51	9.21
Primary Ice Management Fleet	BRK_A26	VOLUME	5022.3	2305	25.22	46.51	9.21
Primary Ice Management Fleet	BRK_A27	VOLUME	5022.3	2205	25.22	46.51	9.21
Primary Ice Management Fleet	BRK_A28	VOLUME	5022.3	2105	25.22	46.51	9.21
Primary Ice Management Fleet	BRK_A29	VOLUME	5022.3	2005	25.22	46.51	9.21
Primary Ice Management Fleet	BRK_A30	VOLUME	5022.3	1905	25.22	46.51	9.21
Primary Ice Management Fleet	BRK_A31	VOLUME	5022.3	1805	25.22	46.51	9.21
Primary Ice Management Fleet	BRK_A32	VOLUME	5022.3	1705	25.22	46.51	9.21
Primary Ice Management Fleet	BRK_A33	VOLUME	5022.3	1605	25.22	46.51	9.21
Primary Ice Management Fleet	BRK_A34	VOLUME	5022.3	1505	25.22	46.51	9.21
Primary Ice Management Fleet	BRK_A35	VOLUME	5022.3	1405	25.22	46.51	9.21
Primary Ice Management Fleet	BRK_A36	VOLUME	5022.3	1305	25.22	46.51	9.21
Primary Ice Management Fleet	BRK_A37	VOLUME	5022.3	1205	25.22	46.51	9.21
Primary Ice Management Fleet	BRK_A38	VOLUME	5022.3	1105	25.22	46.51	9.21
Primary Ice Management Fleet	BRK_A39	VOLUME	5022.3	1005	25.22	46.51	9.21
Primary Ice Management Fleet	BRK_A40	VOLUME	5022.3	905	25.22	46.51	9.21
Primary Ice Management Fleet	BRK_A41	VOLUME	5022.3	805	25.22	46.51	9.21
Primary Ice Management Fleet	BRK_A42	VOLUME	5022.3	705	25.22	46.51	9.21
Primary Ice Management Fleet	BRK_A43	VOLUME	5022.3	605	25.22	46.51	9.21

Source Release Parameters for Screening Modeling Purposes, contd.

Fleet Sources

Source Description	Model Src ID	Source Type	Source Location X (m)	Source Location Y (m)	Rel Ht. (m)	Sigma-Y (m)	Sigma-Z (m)
Primary Ice Management Fleet	BRK_A44	VOLUME	5022.3	505	25.22	46.51	9.21
Primary Ice Management Fleet	BRK_A45	VOLUME	5022.3	405	25.22	46.51	9.21
Primary Ice Management Fleet	BRK_A46	VOLUME	5022.3	305	25.22	46.51	9.21
Primary Ice Management Fleet	BRK_A47	VOLUME	5022.3	205	25.22	46.51	9.21
Primary Ice Management Fleet	BRK_A48	VOLUME	5022.3	105	25.22	46.51	9.21
Primary Ice Management Fleet	BRK_A49	VOLUME	5022.3	5	25.22	46.51	9.21
Primary Ice Management Fleet	BRK_A50	VOLUME	5022.3	-95	25.22	46.51	9.21
Primary Ice Management Fleet	BRK_A51	VOLUME	5022.3	-195	25.22	46.51	9.21
Primary Ice Management Fleet	BRK_A52	VOLUME	5022.3	-295	25.22	46.51	9.21
Primary Ice Management Fleet	BRK_A53	VOLUME	5022.3	-395	25.22	46.51	9.21
Primary Ice Management Fleet	BRK_A54	VOLUME	5022.3	-495	25.22	46.51	9.21
Primary Ice Management Fleet	BRK_A55	VOLUME	5022.3	-595	25.22	46.51	9.21
Primary Ice Management Fleet	BRK_A56	VOLUME	5022.3	-695	25.22	46.51	9.21
Primary Ice Management Fleet	BRK_A57	VOLUME	5022.3	-795	25.22	46.51	9.21
Primary Ice Management Fleet	BRK_A58	VOLUME	5022.3	-895	25.22	46.51	9.21
Primary Ice Management Fleet	BRK_A59	VOLUME	5022.3	-995	25.22	46.51	9.21
Primary Ice Management Fleet	BRK_A60	VOLUME	5022.3	-1095	25.22	46.51	9.21
Primary Ice Management Fleet	BRK_A61	VOLUME	5022.3	-1195	25.22	46.51	9.21
Primary Ice Management Fleet	BRK_A62	VOLUME	5022.3	-1295	25.22	46.51	9.21
Primary Ice Management Fleet	BRK_A63	VOLUME	5022.3	-1395	25.22	46.51	9.21
Primary Ice Management Fleet	BRK_A64	VOLUME	5022.3	-1495	25.22	46.51	9.21
Primary Ice Management Fleet	BRK_A65	VOLUME	5022.3	-1595	25.22	46.51	9.21
Primary Ice Management Fleet	BRK_A66	VOLUME	5022.3	-1695	25.22	46.51	9.21
Primary Ice Management Fleet	BRK_A67	VOLUME	5022.3	-1795	25.22	46.51	9.21
Primary Ice Management Fleet	BRK_A68	VOLUME	5022.3	-1895	25.22	46.51	9.21
Primary Ice Management Fleet	BRK_A69	VOLUME	5022.3	-1995	25.22	46.51	9.21
Primary Ice Management Fleet	BRK_A70	VOLUME	5022.3	-2095	25.22	46.51	9.21
Primary Ice Management Fleet	BRK_A71	VOLUME	5022.3	-2195	25.22	46.51	9.21
Primary Ice Management Fleet	BRK_A72	VOLUME	5022.3	-2295	25.22	46.51	9.21
Primary Ice Management Fleet	BRK_A73	VOLUME	5022.3	-2395	25.22	46.51	9.21
Primary Ice Management Fleet	BRK_A74	VOLUME	5022.3	-2495	25.22	46.51	9.21
Primary Ice Management Fleet	BRK_A75	VOLUME	5022.3	-2595	25.22	46.51	9.21
Primary Ice Management Fleet	BRK_A76	VOLUME	5022.3	-2695	25.22	46.51	9.21
Primary Ice Management Fleet	BRK_A77	VOLUME	5022.3	-2795	25.22	46.51	9.21
Primary Ice Management Fleet	BRK_A78	VOLUME	5022.3	-2895	25.22	46.51	9.21
Primary Ice Management Fleet	BRK_A79	VOLUME	5022.3	-2995	25.22	46.51	9.21
Primary Ice Management Fleet	BRK_A80	VOLUME	5022.3	-3095	25.22	46.51	9.21
Primary Ice Management Fleet	BRK_A81	VOLUME	5022.3	-3195	25.22	46.51	9.21
Primary Ice Management Fleet	BRK_A82	VOLUME	5022.3	-3295	25.22	46.51	9.21
Primary Ice Management Fleet	BRK_A83	VOLUME	5022.3	-3395	25.22	46.51	9.21
Primary Ice Management Fleet	BRK_A84	VOLUME	5022.3	-3495	25.22	46.51	9.21
Primary Ice Management Fleet	BRK_A85	VOLUME	5022.3	-3595	25.22	46.51	9.21
Primary Ice Management Fleet	BRK_A86	VOLUME	5022.3	-3695	25.22	46.51	9.21
Primary Ice Management Fleet	BRK_A87	VOLUME	5022.3	-3795	25.22	46.51	9.21
Primary Ice Management Fleet	BRK_A88	VOLUME	5022.3	-3895	25.22	46.51	9.21
Primary Ice Management Fleet	BRK_A89	VOLUME	5022.3	-3995	25.22	46.51	9.21
Primary Ice Management Fleet	BRK_A90	VOLUME	5022.3	-4095	25.22	46.51	9.21
Primary Ice Management Fleet	BRK_A91	VOLUME	5022.3	-4195	25.22	46.51	9.21
Primary Ice Management Fleet	BRK_A92	VOLUME	5022.3	-4295	25.22	46.51	9.21
Primary Ice Management Fleet	BRK_A93	VOLUME	5022.3	-4395	25.22	46.51	9.21
Primary Ice Management Fleet	BRK_A94	VOLUME	5022.3	-4495	25.22	46.51	9.21
Primary Ice Management Fleet	BRK_A95	VOLUME	5022.3	-4595	25.22	46.51	9.21
Primary Ice Management Fleet	BRK_A96	VOLUME	5022.3	-4695	25.22	46.51	9.21
Resupply Ship in Transit	RST_1	VOLUME	25.0	-12.5	15.24	29.07	6.38
Resupply Ship in Transit	RST_2	VOLUME	-37.5	-12.5	15.24	29.07	6.38
Resupply Ship in Transit	RST_3	VOLUME	-100.0	-12.5	15.24	29.07	6.38
Resupply Ship in Transit	RST_4	VOLUME	-162.5	-12.5	15.24	29.07	6.38
Resupply Ship in Transit	RST_5	VOLUME	-225.0	-12.5	15.24	29.07	6.38
Resupply Ship in Transit	RST_6	VOLUME	-287.5	-12.5	15.24	29.07	6.38
Resupply Ship in Transit	RST_7	VOLUME	-350.0	-12.5	15.24	29.07	6.38
Resupply Ship in Transit	RST_8	VOLUME	-412.5	-12.5	15.24	29.07	6.38
Resupply Ship in Transit	RST_9	VOLUME	-475.0	-12.5	15.24	29.07	6.38
Resupply Ship in Transit	RST_10	VOLUME	-537.5	-12.5	15.24	29.07	6.38
Resupply Ship in Transit	RST_11	VOLUME	-600.0	-12.5	15.24	29.07	6.38
Resupply Ship in Transit	RST_12	VOLUME	-662.5	-12.5	15.24	29.07	6.38
Resupply Ship in Transit	RST_13	VOLUME	-725.0	-12.5	15.24	29.07	6.38

Source Release Parameters for Screening Modeling Purposes, contd.

Fleet Sources

Source Description	Model Src ID	Source Type	Source Location X (m)	Source Location Y (m)	Rel Ht. (m)	Sigma-Y (m)	Sigma-Z (m)
Resupply Ship in Transit	RST_14	VOLUME	-787.5	-12.5	15.24	29.07	6.38
Resupply Ship in Transit	RST_15	VOLUME	-850.0	-12.5	15.24	29.07	6.38
Resupply Ship in Transit	RST_16	VOLUME	-912.5	-12.5	15.24	29.07	6.38
Resupply Ship in Transit	RST_17	VOLUME	-975.0	-12.5	15.24	29.07	6.38
Resupply Ship in Transit	RST_18	VOLUME	-1037.5	-12.5	15.24	29.07	6.38
Resupply Ship in Transit	RST_19	VOLUME	-1100.0	-12.5	15.24	29.07	6.38
Resupply Ship in Transit	RST_20	VOLUME	-1162.5	-12.5	15.24	29.07	6.38
Resupply Ship in Transit	RST_21	VOLUME	-1225.0	-12.5	15.24	29.07	6.38
Resupply Ship in Transit	RST_22	VOLUME	-1287.5	-12.5	15.24	29.07	6.38
Resupply Ship in Transit	RST_23	VOLUME	-1350.0	-12.5	15.24	29.07	6.38
Resupply Ship in Transit	RST_24	VOLUME	-1412.5	-12.5	15.24	29.07	6.38
Resupply Ship in Transit	RST_25	VOLUME	-1475.0	-12.5	15.24	29.07	6.38
Resupply Ship in Transit	RST_26	VOLUME	-1537.5	-12.5	15.24	29.07	6.38
Resupply Ship in Transit	RST_27	VOLUME	-1600.0	-12.5	15.24	29.07	6.38
Resupply Ship in Transit	RST_28	VOLUME	-1662.5	-12.5	15.24	29.07	6.38
Resupply Ship in Transit	RST_29	VOLUME	-1725.0	-12.5	15.24	29.07	6.38
Resupply Ship in Transit	RST_30	VOLUME	-1787.5	-12.5	15.24	29.07	6.38
Resupply Ship in Transit	RST_31	VOLUME	-1850.0	-12.5	15.24	29.07	6.38
Resupply Ship in Transit	RST_32	VOLUME	-1912.5	-12.5	15.24	29.07	6.38
Resupply Ship in Transit	RST_33	VOLUME	-1975.0	-12.5	15.24	29.07	6.38
Resupply Ship in Transit	RST_34	VOLUME	-2037.5	-12.5	15.24	29.07	6.38
Resupply Ship in Transit	RST_35	VOLUME	-2100.0	-12.5	15.24	29.07	6.38
Resupply Ship in Transit	RST_36	VOLUME	-2162.5	-12.5	15.24	29.07	6.38
Resupply Ship in Transit	RST_37	VOLUME	-2225.0	-12.5	15.24	29.07	6.38
Resupply Ship in Transit	RST_38	VOLUME	-2287.5	-12.5	15.24	29.07	6.38
Resupply Ship in Transit	RST_39	VOLUME	-2350.0	-12.5	15.24	29.07	6.38
Resupply Ship in Transit	RST_40	VOLUME	-2412.5	-12.5	15.24	29.07	6.38
Resupply Ship in Transit	RST_41	VOLUME	-2475.0	-12.5	15.24	29.07	6.38
Resupply Ship in Transit	RST_42	VOLUME	-2537.5	-12.5	15.24	29.07	6.38
Resupply Ship in Transit	RST_43	VOLUME	-2600.0	-12.5	15.24	29.07	6.38
Resupply Ship in Transit	RST_44	VOLUME	-2662.5	-12.5	15.24	29.07	6.38
Resupply Ship in Transit	RST_45	VOLUME	-2725.0	-12.5	15.24	29.07	6.38
Resupply Ship in Transit	RST_46	VOLUME	-2787.5	-12.5	15.24	29.07	6.38
Resupply Ship in Transit	RST_47	VOLUME	-2850.0	-12.5	15.24	29.07	6.38
Resupply Ship in Transit	RST_48	VOLUME	-2912.5	-12.5	15.24	29.07	6.38
Resupply Ship in Transit	RST_49	VOLUME	-2975.0	-12.5	15.24	29.07	6.38
Resupply Ship in Transit	RST_50	VOLUME	-3037.5	-12.5	15.24	29.07	6.38
Resupply Ship in Transit	RST_51	VOLUME	-3100.0	-12.5	15.24	29.07	6.38
Resupply Ship in Transit	RST_52	VOLUME	-3162.5	-12.5	15.24	29.07	6.38
Resupply Ship in Transit	RST_53	VOLUME	-3225.0	-12.5	15.24	29.07	6.38
Resupply Ship in Transit	RST_54	VOLUME	-3287.5	-12.5	15.24	29.07	6.38
Resupply Ship in Transit	RST_55	VOLUME	-3350.0	-12.5	15.24	29.07	6.38
Resupply Ship in Transit	RST_56	VOLUME	-3412.5	-12.5	15.24	29.07	6.38
Resupply Ship in Transit	RST_57	VOLUME	-3475.0	-12.5	15.24	29.07	6.38
Resupply Ship in Transit	RST_58	VOLUME	-3537.5	-12.5	15.24	29.07	6.38
Resupply Ship in Transit	RST_59	VOLUME	-3600.0	-12.5	15.24	29.07	6.38
Resupply Ship in Transit	RST_60	VOLUME	-3662.5	-12.5	15.24	29.07	6.38
Resupply Ship in Transit	RST_61	VOLUME	-3725.0	-12.5	15.24	29.07	6.38
Resupply Ship in Transit	RST_62	VOLUME	-3787.5	-12.5	15.24	29.07	6.38
Resupply Ship in Transit	RST_63	VOLUME	-3850.0	-12.5	15.24	29.07	6.38
Resupply Ship in Transit	RST_64	VOLUME	-3912.5	-12.5	15.24	29.07	6.38
Resupply Ship in Transit	RST_65	VOLUME	-3975.0	-12.5	15.24	29.07	6.38
Resupply Ship in Transit	RST_66	VOLUME	-4037.5	-12.5	15.24	29.07	6.38
Resupply Ship in Transit	RST_67	VOLUME	-4100.0	-12.5	15.24	29.07	6.38
Resupply Ship in Transit	RST_68	VOLUME	-4162.5	-12.5	15.24	29.07	6.38
Resupply Ship in Transit	RST_69	VOLUME	-4225.0	-12.5	15.24	29.07	6.38
Resupply Ship in Transit	RST_70	VOLUME	-4287.5	-12.5	15.24	29.07	6.38
Resupply Ship in Transit	RST_71	VOLUME	-4350.0	-12.5	15.24	29.07	6.38
Resupply Ship in Transit	RST_72	VOLUME	-4412.5	-12.5	15.24	29.07	6.38
Resupply Ship in Transit	RST_73	VOLUME	-4475.0	-12.5	15.24	29.07	6.38
Resupply Ship in Transit	RST_74	VOLUME	-4537.5	-12.5	15.24	29.07	6.38
Resupply Ship in Transit	RST_75	VOLUME	-4600.0	-12.5	15.24	29.07	6.38
Resupply Ship in Transit	RST_76	VOLUME	-4662.5	-12.5	15.24	29.07	6.38
Resupply Ship in Transit	RST_77	VOLUME	-4725.0	-12.5	15.24	29.07	6.38
Resupply Ship in Transit	RST_78	VOLUME	-4787.5	-12.5	15.24	29.07	6.38
Resupply Ship in Transit	RST_79	VOLUME	-4850.0	-12.5	15.24	29.07	6.38
Resupply Ship in Transit	RST_80	VOLUME	-4912.5	-12.5	15.24	29.07	6.38

Configuration of Platform Equipment

* Building structure heights provided below are referenced above the main deck which is 15 feet above the water surface.

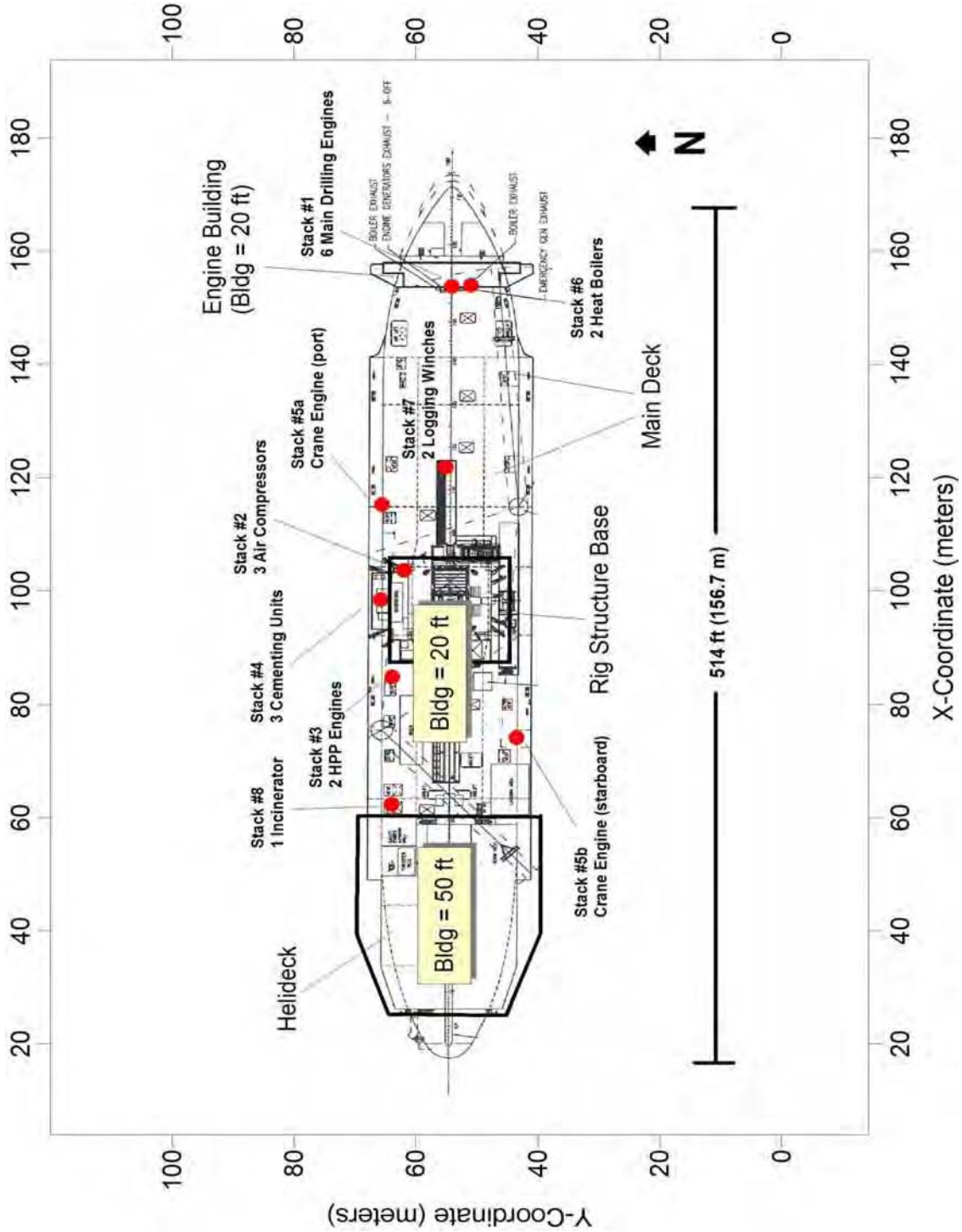

Building Information for ISC-BPIP Analysis

Structure Name	Main Deck		Helideck		Rig Structure Base		Engine Housing	
Height Above Water	4.57 m		19.81 m		10.67 m		10.67 m	
# Structure Corners	11		6		4		4	
Structure	Coordinate		Coordinate		Coordinate		Coordinate	
Corner #	X(m)	Y(m)	X(m)	Y(m)	X(m)	Y(m)	X(m)	Y(m)
1	15.7	55.3	59.0	40.5	81.6	66.0	154.1	47.5
2	32.6	67.8	38.5	40.5	81.6	44.0	154.1	62.5
3	141.6	67.8	23.6	45.0	104.1	44.0	158.5	62.5
4	141.8	66.0	23.6	64.8	104.1	66.0	158.5	47.5
5	158.8	62.5	38.5	69.8	---	---	---	---
6	172.3	55.0	59.0	69.8	---	---	---	---
7	158.8	47.0	---	---	---	---	---	---
8	143.4	44.3	---	---	---	---	---	---
9	141.6	42.3	---	---	---	---	---	---
10	47.5	42.3	---	---	---	---	---	---
11	32.6	42.3	---	---	---	---	---	---

Structure Name	Re-Supply-T		Re-Supply-S		Re-Supply-B	
Height Above Water	13.72 m		3.05 m		7.62 m	
# Structure Corners	11		6		4	
Structure	Coordinate		Coordinate		Coordinate	
Corner #	X(m)	Y(m)	X(m)	Y(m)	X(m)	Y(m)
1	63.0	-29.5	63.0	-12.0	63.0	-34.5
2	63.0	-15.5	63.0	28.0	63.0	-12.0
3	77.0	-15.5	77.0	28.0	77.0	-12.0
4	77.0	-29.5	77.0	-12.0	77.0	-34.5

Building Information for SCREEN3 Analyses

Source Description	Building Dimensions (m) [1]		
	Height	Max. Width	Min. Width
Resupply Ship	13.72	14.00	14.00
Oil Spill Response (Kvichaks)	3.05	4.88	3.66
Oil Spill Response (Nanuq)	13.72	15.24	15.24
Fennica/Nordica	27.43	26.00	21.34
Vladimir Ignatjuk	19.81	17.51	17.51
Talagy	19.81	17.25	13.72
Tor Viking II	24.38	18.00	15.24
Odin Viking II	24.38	16.90	16.90
Balder Viking	24.38	18.00	15.24
Vidar Viking	24.38	18.00	15.24

[1] Information derived from ships specifications and photographs (Ref: Firebaugh Technical Memo).

Air Sciences Inc.	PROJECT TITLE: Shell Offshore, Inc.	BY: S. Pryor	
	PROJECT NO: 180-15-1	PAGE: 13	OF: 21
ENGINEERING CALCULATIONS	SUBJECT: Discoverer Emissions-AK OCS	DATE: September 17, 2009	

Hourly Discoverer Maximum Emissions

Unit ID	Description	Rating	Max fuel consumpt. (MMBtu/hr) [1]	Fuel Use gal/hr	Maximum Emissions (lb/hr) [1] PM_{10}	$PM_{2.5}$	NO_x	SO_2	CO	VOC	Lead	Notes
Frontier Discoverer												
FD-1	Generator Engine	1,325 hp	6.91	51.95	0.20	0.20	0.77	1.10E-02	0.28	0.04	2.01E-04	2
FD-2	Generator Engine	1,325 hp	6.91	51.95	0.20	0.20	0.77	1.10E-02	0.28	0.04	2.01E-04	2
FD-3	Generator Engine	1,325 hp	6.91	51.95	0.20	0.20	0.77	1.10E-02	0.28	0.04	2.01E-04	2
FD-4	Generator Engine	1,325 hp	6.91	51.95	0.20	0.20	0.77	1.10E-02	0.28	0.04	2.01E-04	2
FD-5	Generator Engine	1,325 hp	6.91	51.95	0.20	0.20	0.77	1.10E-02	0.28	0.04	2.01E-04	2
FD-6	Generator Engine	1,325 hp	6.91	51.95	0.20	0.20	0.77	1.10E-02	0.28	0.04	2.01E-04	2
FD-7	Propulsion Engine	7,200 hp	0.00	0.00	0.00	0.00	0.00	0.00E+00	0.00	0.00	0.00E+00	3
FD-8	Em Generator	131 hp	0.92	6.89	0.64	0.64	3.26	1.46E-03	1.79	0.34	2.66E-05	4
FD-9	MLC Compressor	540 hp	3.58	26.90	0.18	0.18	3.55	5.71E-03	3.11	3.55	1.04E-04	5
FD-10	MLC Compressor	540 hp	3.58	26.90	0.18	0.18	3.55	5.71E-03	3.11	3.55	1.04E-04	5
FD-11	MLC Compressor	540 hp	3.58	26.90	0.18	0.18	3.55	5.71E-03	3.11	3.55	1.04E-04	5
FD-12	HPU Engine	250 hp	1.95	14.66	0.10	0.10	5.41	3.11E-03	0.16	0.08	5.66E-05	6
FD-13	HPU Engine	250 hp	1.95	14.66	0.10	0.10	5.41	3.11E-03	0.16	0.08	5.66E-05	6
FD-14	Port Deck Crane	365 hp	2.77	20.78	0.04	0.04	6.20	4.41E-03	0.13	0.04	8.02E-05	6
FD-15	Starbd Deck Crane	365 hp	2.77	20.78	0.04	0.04	6.20	4.41E-03	0.13	0.04	8.02E-05	6
FD-16	Cementing Unit	335 hp	2.62	19.65	0.21	0.21	8.66	4.17E-03	0.48	0.15	7.58E-05	6
FD-17	Cementing Unit	335 hp	2.62	19.65	0.21	0.21	8.66	4.17E-03	0.48	0.15	7.58E-05	6
FD-18	Cementing Unit	147 hp	1.15	8.62	0.09	0.09	3.80	1.83E-03	0.21	0.07	3.33E-05	6
FD-19	Logging Winch	128 hp	1.00	7.51	0.08	0.08	3.31	1.59E-03	0.18	0.06	2.90E-05	6
FD-20	Logging Winch	36 kW	0.34	2.53	0.01	0.01	0.60	5.37E-04	0.04	0.06	9.76E-06	6, 7
FD-21	Heat Boiler	7.97 MMBtu/hr	7.97	59.88	0.19	0.19	1.60	1.27E-02	0.62	0.01	7.17E-05	
FD-22	Heat Boiler	7.97 MMBtu/hr	7.97	59.88	0.19	0.19	1.60	1.27E-02	0.62	0.01	7.17E-05	
FD-23	Incinerator	276 lb/hr			1.13	0.97	0.69	0.35	4.28	0.41	0.03	
FD-31	Resupply Ship - docked		4.09	30.71	1.27	1.27	18.03	0.83	3.88	1.43	1.19E-04	
	Discoverer total while drilling		90.32	678.58	6.03	5.86	88.71	1.31	24.17	13.79	3.17E-02	

Hourly Fleet Maximum Emissions

		Max fuel consumpt. (MMBtu/hr) [1]	Fuel Use gal/hr	Maximum Emissions (lb/hr) [1] PM_{10}	$PM_{2.5}$	NO_x	SO_2	CO	VOC	Lead	Notes
Ice Breaker											
IB ICE Engines		188.64	1,417.30	47.00	41.50	1,108.42	41.42	148.22	26.60	5.47E-03	
IB Incinerators	154 lb/hr			1.02	0.70	0.23	0.19	23.10	7.70	1.64E-02	
Ice Breaker Total		188.64	1,417.30	48.02	42.20	1,108.65	41.62	171.32	34.30	2.19E-02	
Anchor Handler											
AH ICE Engines		180.16	1,353.60	10.59	10.59	91.20	39.56	148.20	17.02	5.22E-03	
AH Boiler		4.00	30.05	0.10	0.10	0.21	0.90	0.15	0.01	3.60E-05	
AH Incinerator	151 lb/hr			1.01	0.69	0.38	0.19	22.68	7.56	1.61E-02	
Anchor Handler Total		184.16	1,383.65	11.69	11.37	91.78	40.65	171.04	24.59	2.14E-02	
Total Ice Management Fleet		*372.80*	*2,800.95*	*59.71*	*53.57*	*1,200.44*	*82.26*	*342.36*	*58.89*	*4.32E-02*	
Resupply Ship - in Transit		*44.41*	*333.65*	*20.04*	*16.07*	*265.11*	*9.75*	*34.89*	*6.26*	*1.29E-03*	
OSR Fleet											
OSR Main Ship ICE Propulsion Engines		46.01	345.67	0.30	0.30	162.70	0.07	0.87	1.18	1.33E-03	6
OSR Main Ship ICE Generators		17.99	135.16	1.22	0.98	107.40	0.03	1.41	0.25	5.22E-04	6
OSR Main Ship Incinerator	125 lb/hr			0.83	0.57	0.19	0.16	18.75	6.25	1.33E-02	
OSR Main Ship Total		64.00	480.83	2.35	1.85	270.28	0.26	21.04	7.69	1.52E-02	
OSR Work Boat ICE Propulsion Engines		12.60	94.67	0.31	0.31	18.43	2.55	0.62	0.31	3.65E-04	
OSR Work Boat ICE Generators		0.25	1.89	0.08	0.08	1.11	0.05	0.24	0.09	7.31E-06	
OSR Work Boats Total		12.85	96.56	0.38	0.38	19.54	2.60	0.85	0.40	3.73E-04	
OSR Total		*76.85*	*577.39*	*2.74*	*2.23*	*289.82*	*2.85*	*21.89*	*8.08*	*1.55E-02*	
	Total All Fleet	494.06	3,711.99	82.49	71.88	1,755.37	94.87	399.14	73.24	6.01E-02	
	Total All	584.38	4,390.58	88.52	77.74	1,844.08	96.18	423.31	87.03	9.18E-02	

Notes

1 All emissions are the maximum 1-hour values
2 Units FD-1-6 (Generator Engines) instantaneous capacity restriction, SCR NOx control effectiveness and Oxidation Catalyst reduction efficiencies applied
3 Not used during drilling
4 Unit FD-8 (Emergency Generator) operation assumed for 120 min/week
5 Units FD-9-11 (MLC Compressors) are Tier 3 engines
6 CDPF PM & CO reduction efficiencies applied
7 Unit FD-20 (Logging Winch) is a Tier 2 engine

Air Sciences Inc.	PROJECT TITLE: Shell Offshore, Inc.	BY: S. Pryor	
	PROJECT NO: 180-15-1	PAGE: 14	OF: 21
ENGINEERING CALCULATIONS	SUBJECT: Discoverer Emissions-AK OCS	DATE: September 17, 2009	

Base Operating Case [1]

Dailly Discoverer Maximum Emissions

All Units 24 hr/day except the following: Unit FD-23 300 lb/trash per day

Unit FD-8 120 min/week 2 hr/day Unit FD-31 12 hr/day

Unit ID	Description	Rating	Max fuel consumpt. (MMBtu/day)	Fuel Use gal/day	Maximum Emissions (lb/day) [2] PM_{10}	$PM_{2.5}$	NO_x	SO_2	CO	VOC	Lead	Notes
Frontier Discoverer												
FD-1	Generator Engine	1,325 hp	165.94	1,246.77	4.72	4.72	18.57	0.26	6.63	0.85	4.81E-03	3
FD-2	Generator Engine	1,325 hp	165.94	1,246.77	4.72	4.72	18.57	0.26	6.63	0.85	4.81E-03	3
FD-3	Generator Engine	1,325 hp	165.94	1,246.77	4.72	4.72	18.57	0.26	6.63	0.85	4.81E-03	3
FD-4	Generator Engine	1,325 hp	165.94	1,246.77	4.72	4.72	18.57	0.26	6.63	0.85	4.81E-03	3
FD-5	Generator Engine	1,325 hp	165.94	1,246.77	4.72	4.72	18.57	0.26	6.63	0.85	4.81E-03	3
FD-6	Generator Engine	1,325 hp	165.94	1,246.77	4.72	4.72	18.57	0.26	6.63	0.85	4.81E-03	3
FD-7	Propulsion Engine	7,200 hp	0.00	0.00	0.00	0.00	0.00	0.00	0.00	0.00	0.00E+00	4
FD-8	Em Generator	131 hp	1.83	13.78	1.28	1.28	6.52	0.00	3.58	0.67	5.32E-05	5
FD-9	MLC Compressor	540 hp	85.93	645.60	4.26	4.26	85.29	0.14	74.63	85.29	2.49E-03	6
FD-10	MLC Compressor	540 hp	85.93	645.60	4.26	4.26	85.29	0.14	74.63	85.29	2.49E-03	6
FD-11	MLC Compressor	540 hp	85.93	645.60	4.26	4.26	85.29	0.14	74.63	85.29	2.49E-03	6
FD-12	HPU Engine	250 hp	46.84	351.89	2.50	2.50	129.76	0.07	3.96	1.96	1.36E-03	7
FD-13	HPU Engine	250 hp	46.84	351.89	2.50	2.50	129.76	0.07	3.96	1.96	1.36E-03	7
FD-14	Port Deck Crane	365 hp	66.36	498.60	1.03	1.03	148.73	0.11	3.14	0.91	1.92E-03	7
FD-15	Starbd Deck Crane	365 hp	66.36	498.60	1.03	1.03	148.73	0.11	3.14	0.91	1.92E-03	7
FD-16	Cementing Unit	335 hp	17.45	131.09	1.42	1.42	57.75	0.03	3.23	0.99	5.06E-04	7
FD-17	Cementing Unit	335 hp	17.45	131.09	1.42	1.42	57.75	0.03	3.23	0.99	5.06E-04	7
FD-18	Cementing Unit	147 hp	7.66	57.52	0.62	0.62	25.34	0.01	1.42	0.43	2.22E-04	7
FD-19	Logging Winch	128 hp	0.00	0.00	0.00	0.00	0.00	0.00	0.00	0.00	0.00E+00	7, 8
FD-20	Logging Winch	36 kW	0.00	0.00	0.00	0.00	0.00	0.00	0.00	0.00	0.00E+00	7, 8, 9
FD-21	Heat Boiler	7.97 MMBtu/hr	191.28	1,437.14	4.50	4.50	38.50	0.31	14.80	0.27	1.72E-03	
FD-22	Heat Boiler	7.97 MMBtu/hr	191.28	1,437.14	4.50	4.50	38.50	0.31	14.80	0.27	1.72E-03	
FD-23	Incinerator	276 lb/hr			1.23	1.05	0.75	0.38	4.65	0.45	0.03	
FD-31	Resupply Ship - docked		24.53	184.29	7.60	7.60	108.17	4.96	23.30	8.58	7.11E-04	
	Discoverer total while drilling		1,931.31	14,510.44	70.74	70.56	1257.57	8.37	346.87	279.38	8.03E-02	

Daily Fleet Maximum Emissions

Resupply - in Transit 4 hr/day

		Max fuel consumpt. (MMBtu/day)	Fuel Use gal/day	Maximum Emissions (lb/day) [2] PM_{10}	$PM_{2.5}$	NO_x	SO_2	CO	VOC	Lead	Notes
Ice Breaker											
IB ICE Engines		4,527.36	34,015.24	1127.93	996.02	26,602.13	994.14	3557.21	638.45	1.31E-01	
IB Incinerators	154 lb/hr			24.58	16.82	5.54	4.62	554.40	184.80	3.94E-01	
Ice Breaker Total		4,527.36	34,015.24	1152.51	1012.84	26,607.68	998.76	4111.61	823.25	5.25E-01	
Anchor Handler											
AH ICE Engines		4,323.86	32,486.30	254.06	254.06	2,188.78	949.46	3,556.90	408.53	1.25E-01	
AH Boiler		96.00	721.27	2.38	2.38	4.94	21.52	3.61	0.14	8.64E-04	
AH Incinerator	151 lb/hr			24.14	16.51	9.07	4.54	544.44	181.48	3.87E-01	
Anchor Handler Total		4,419.86	33,207.58	280.58	272.96	2,202.80	975.51	4104.94	590.16	5.13E-01	
Total Ice Management Fleet		*8,947.22*	*67,222.81*	*1433.09*	*1285.79*	*28,810.47*	*1974.27*	*8216.55*	*1413.41*	*1.04E+00*	
Resupply Ship - in Transit		*177.63*	1,334.60	*80.16*	*64.29*	*1,060.44*	*39.01*	*139.57*	*25.05*	*5.15E-03*	
OSR Fleet											
OSR Main Ship ICE Propulsion Engines		399.29	3,000.00	2.64	2.64	1,412.03	0.64	7.57	10.27	1.16E-02	7, 10
OSR Main Ship ICE Generators		106.48	800.00	7.21	5.78	635.66	0.17	8.37	1.50	3.09E-03	7, 10
OSR Main Ship Incinerator	125 lb/hr			19.95	13.65	4.50	3.75	450.00	150.00	3.20E-01	
OSR Main Ship Total		505.77	3,800.00	29.80	22.08	2,052.20	4.56	465.94	161.77	3.34E-01	
OSR Work Boat ICE Propulsion Engines		302.40	2,272.01	7.33	7.33	442.29	61.09	14.76	7.43	8.77E-03	
OSR Work Boat ICE Generators		6.05	45.44	1.87	1.87	26.67	1.22	5.75	2.12	1.75E-04	
OSR Work Boats Total		308.45	2,317.45	9.21	9.21	468.96	62.31	20.51	9.55	8.94E-03	
OSR Total		*814.22*	*6,117.45*	*39.01*	*31.28*	*2,521.16*	*66.87*	*486.44*	*171.31*	*3.43E-01*	
	Total All Fleet	9,939.07	74,674.86	1552.26	1381.37	32,392.07	2080.15	8842.57	1609.77	1.39E+00	
	Total All	11,870.38	89,185.30	1622.99	1451.93	33,649.64	2088.52	9189.44	1889.15	1.47E+00	

Notes

1 Base Operating Case: More than one of the two HPU units operating that day (greater than 352 gallons per day), and incineration is limited to 300 lb feed per day.
2 All emissions are the maximum 24-hour values
3 Units FD-1-6 (Generator Engines) instantaneous capacity restriction, SCR NOx control effectiveness and Oxidation Catalyst reduction efficiencies applied
4 Not used during drilling 0%
5 Unit FD-8 (Emergency Generator) operation assumed for 120 min/week
6 Units FD-9-11 (MLC Compressors) are Tier 3 engines
7 CDPF PM & CO reduction efficiencies applied
8 Units FD-19 & 20 (Logging Winches) cannot operate simultaneously with cementing units, emissions combined with cementing units. 0%
9 Unit FD-20 (Logging Winch) is a Tier 2 engine
10 OSR Main Ship Propulsion and Generator Engines restriction applied

Air Sciences Inc.	PROJECT TITLE: Shell Offshore, Inc.	BY: S. Pryor	
	PROJECT NO: 180-15-1	PAGE: 15	OF: 21
ENGINEERING CALCULATIONS	SUBJECT: Discoverer Emissions-AK OCS	DATE: September 17, 2009	

Alternate Operating Scenario #1 [1]

Dailly Discoverer Maximum Emissions

All Units 24 hr/day except the following: Unit FD-23 800 lb/trash per day

Unit FD-8 120 min/week 2 hr/day Unit FD-31 12 hr/day

Unit ID	Description	Rating	Max fuel consumpt. (MMBtu/day)	Fuel Use gal/day	Maximum Emissions (lb/day) [2] PM_{10}	$PM_{2.5}$	NO_x	SO_2	CO	VOC	Lead	Notes
Frontier Discoverer												
FD-1	Generator Engine	1,325 hp	165.94	1,246.77	4.72	4.72	18.57	0.26	6.63	0.85	4.81E-03	3
FD-2	Generator Engine	1,325 hp	165.94	1,246.77	4.72	4.72	18.57	0.26	6.63	0.85	4.81E-03	3
FD-3	Generator Engine	1,325 hp	165.94	1,246.77	4.72	4.72	18.57	0.26	6.63	0.85	4.81E-03	3
FD-4	Generator Engine	1,325 hp	165.94	1,246.77	4.72	4.72	18.57	0.26	6.63	0.85	4.81E-03	3
FD-5	Generator Engine	1,325 hp	165.94	1,246.77	4.72	4.72	18.57	0.26	6.63	0.85	4.81E-03	3
FD-6	Generator Engine	1,325 hp	165.94	1,246.77	4.72	4.72	18.57	0.26	6.63	0.85	4.81E-03	3
FD-7	Propulsion Engine	7,200 hp	0.00	0.00	0.00	0.00	0.00	0.00	0.00	0.00	0.00E+00	4
FD-8	Em Generator	131 hp	1.83	13.78	1.28	1.28	6.52	0.00	3.58	0.67	5.32E-05	5
FD-9	MLC Compressor	540 hp	85.93	645.60	4.26	4.26	85.29	0.14	74.63	85.29	2.49E-03	6
FD-10	MLC Compressor	540 hp	85.93	645.60	4.26	4.26	85.29	0.14	74.63	85.29	2.49E-03	6
FD-11	MLC Compressor	540 hp	85.93	645.60	4.26	4.26	85.29	0.14	74.63	85.29	2.49E-03	6
FD-12	HPU Engine	250 hp	46.84	351.89	2.50	2.50	129.76	0.07	3.96	1.96	1.36E-03	7
FD-13	HPU Engine	250 hp	0.00	0.00	0.00	0.00	0.00	0.00	0.00	0.00	0.00E+00	7
FD-14	Port Deck Crane	365 hp	66.36	498.60	1.03	1.03	148.73	0.11	3.14	0.91	1.92E-03	7
FD-15	Starbd Deck Crane	365 hp	66.36	498.60	1.03	1.03	148.73	0.11	3.14	0.91	1.92E-03	7
FD-16	Cementing Unit	335 hp	17.45	131.09	1.42	1.42	57.75	0.03	3.23	0.99	5.06E-04	7
FD-17	Cementing Unit	335 hp	17.45	131.09	1.42	1.42	57.75	0.03	3.23	0.99	5.06E-04	7
FD-18	Cementing Unit	147 hp	7.66	57.52	0.62	0.62	25.34	0.01	1.42	0.43	2.22E-04	7
FD-19	Logging Winch	128 hp	0.00	0.00	0.00	0.00	0.00	0.00	0.00	0.00	0.00E+00	7, 8
FD-20	Logging Winch	36 kW	0.00	0.00	0.00	0.00	0.00	0.00	0.00	0.00	0.00E+00	7, 8, 9
FD-21	Heat Boiler	7.97 MMBtu/hr	191.28	1,437.14	4.50	4.50	38.50	0.31	14.80	0.27	1.72E-03	
FD-22	Heat Boiler	7.97 MMBtu/hr	191.28	1,437.14	4.50	4.50	38.50	0.31	14.80	0.27	1.72E-03	
FD-23	Incinerator	276 lb/hr			3.28	2.80	2.00	1.00	12.40	1.20	0.09	
FD-31	Resupply Ship - docked		24.53	184.29	7.60	7.60	108.17	4.96	23.30	8.58	7.11E-04	
	Discoverer total while drilling		1,884.47	14,158.55	70.29	69.81	1129.05	8.92	350.67	278.17	1.32E-01	

Daily Fleet Maximum Emissions

Resupply - in Transit 4 hr/day

		Max fuel consumpt. (MMBtu/day)	Fuel Use gal/day	Maximum Emissions (lb/day) [2] PM_{10}	$PM_{2.5}$	NO_x	SO_2	CO	VOC	Lead	Notes
Ice Breaker											
IB ICE Engines		4,527.36	34,015.24	1127.93	996.02	26,602.13	994.14	3557.21	638.45	1.31E-01	
IB Incinerators	154 lb/hr			24.58	16.82	5.54	4.62	554.40	184.80	3.94E-01	
Ice Breaker Total		4,527.36	34,015.24	1152.51	1012.84	26,607.68	998.76	4111.61	823.25	5.25E-01	
Anchor Handler											
AH ICE Engines		4,323.86	32,486.30	254.06	254.06	2,188.78	949.46	3,556.90	408.53	1.25E-01	
AH Boiler		96.00	721.27	2.38	2.38	4.94	21.52	3.61	0.14	8.64E-04	
AH Incinerator	151 lb/hr			24.14	16.51	9.07	4.54	544.44	181.48	3.87E-01	
Anchor Handler Total		4,419.86	33,207.58	280.58	272.96	2,202.80	975.51	4104.94	590.16	5.13E-01	
Total Ice Management Fleet		*8,947.22*	*67,222.81*	*1433.09*	*1285.79*	*28,810.47*	*1974.27*	*8216.55*	*1413.41*	*1.04E+00*	
Resupply Ship - in Transit		*177.63*	1,334.60	*80.16*	*64.29*	*1,060.44*	*39.01*	*139.57*	*25.05*	*5.15E-03*	
OSR Fleet											
OSR Main Ship ICE Propulsion Engines		399.29	3,000.00	2.64	2.64	1,412.03	0.64	7.57	10.27	1.16E-02	7, 10
OSR Main Ship ICE Generators		106.48	800.00	7.21	5.78	635.66	0.17	8.37	1.50	3.09E-03	7, 10
OSR Main Ship Incinerator	125 lb/hr			19.95	13.65	4.50	3.75	450.00	150.00	3.20E-01	
OSR Main Ship Total		505.77	3,800.00	29.80	22.08	2,052.20	4.56	465.94	161.77	3.34E-01	
OSR Work Boat ICE Propulsion Engines		302.40	2,272.01	7.33	7.33	442.29	61.09	14.76	7.43	8.77E-03	
OSR Work Boat ICE Generators		6.05	45.44	1.87	1.87	26.67	1.22	5.75	2.12	1.75E-04	
OSR Work Boats Total		308.45	2,317.45	9.21	9.21	468.96	62.31	20.51	9.55	8.94E-03	
OSR Total		*814.22*	*6,117.45*	*39.01*	*31.28*	*2,521.16*	*66.87*	*486.44*	*171.31*	*3.43E-01*	
	Total All Fleet	9,939.07	74,674.86	1552.26	1381.37	32,392.07	2080.15	8842.57	1609.77	1.39E+00	
	Total All	11,823.55	88,833.41	1622.54	1451.18	33,521.13	2089.07	9193.23	1887.94	1.52E+00	

Notes

1 Operating Scenario #1: More than no use but less than one of the two HPU units operating that day (more than zero but less than or equal to 352 gallons per day), and incineration is limited to 800 lb feed per day.

2 All emissions are the maximum 24-hour values

3 Units FD-1-6 (Generator Engines) instantaneous capacity restriction, SCR NOx control effectiveness and Oxidation Catalyst reduction efficiencies applied

4 Not used during drilling 0%

5 Unit FD-8 (Emergency Generator) operation assumed for 120 min/week

6 Units FD-9-11 (MLC Compressors) are Tier 3 engines

7 CDPF PM & CO reduction efficiencies applied

8 Units FD-19 & 20 (Logging Winches) cannot operate simultaneously with cementing units, emissions combined with cementing units. 0%

9 Unit FD-20 (Logging Winch) is a Tier 2 engine

10 OSR Main Ship Propulsion and Generator Engines restriction applied

Air Sciences Inc.	PROJECT TITLE: Shell Offshore, Inc.	BY: S. Pryor	
	PROJECT NO: 180-15-1	PAGE: 16	OF: 21
ENGINEERING CALCULATIONS	SUBJECT: Discoverer Emissions-AK OCS	DATE: September 17, 2009	

Alternate Operating Scenario #2 [1]

Dailly Discoverer Maximum Emissions

All Units 24 hr/day except the following: Unit FD-23 1300 lb/trash per day

Unit FD-8 120 min/week 2 hr/day Unit FD-31 12 hr/day

Unit ID	Description	Rating	Max fuel consumpt. (MMBtu/day)	Fuel Use gal/day	Maximum Emissions (lb/day) [2] PM_{10}	$PM_{2.5}$	NO_x	SO_2	CO	VOC	Lead	Notes
Frontier Discoverer												
FD-1	Generator Engine	1,325 hp	165.94	1,246.77	4.72	4.72	18.57	0.26	6.63	0.85	4.81E-03	3
FD-2	Generator Engine	1,325 hp	165.94	1,246.77	4.72	4.72	18.57	0.26	6.63	0.85	4.81E-03	3
FD-3	Generator Engine	1,325 hp	165.94	1,246.77	4.72	4.72	18.57	0.26	6.63	0.85	4.81E-03	3
FD-4	Generator Engine	1,325 hp	165.94	1,246.77	4.72	4.72	18.57	0.26	6.63	0.85	4.81E-03	3
FD-5	Generator Engine	1,325 hp	165.94	1,246.77	4.72	4.72	18.57	0.26	6.63	0.85	4.81E-03	3
FD-6	Generator Engine	1,325 hp	165.94	1,246.77	4.72	4.72	18.57	0.26	6.63	0.85	4.81E-03	3
FD-7	Propulsion Engine	7,200 hp	0.00	0.00	0.00	0.00	0.00	0.00	0.00	0.00	0.00E+00	4
FD-8	Em Generator	131 hp	1.83	13.78	1.28	1.28	6.52	0.00	3.58	0.67	5.32E-05	5
FD-9	MLC Compressor	540 hp	85.93	645.60	4.26	4.26	85.29	0.14	74.63	85.29	2.49E-03	6
FD-10	MLC Compressor	540 hp	85.93	645.60	4.26	4.26	85.29	0.14	74.63	85.29	2.49E-03	6
FD-11	MLC Compressor	540 hp	85.93	645.60	4.26	4.26	85.29	0.14	74.63	85.29	2.49E-03	6
FD-12	HPU Engine	250 hp	0.00	0.00	0.00	0.00	0.00	0.00	0.00	0.00	0.00E+00	7
FD-13	HPU Engine	250 hp	0.00	0.00	0.00	0.00	0.00	0.00	0.00	0.00	0.00E+00	7
FD-14	Port Deck Crane	365 hp	66.36	498.60	1.03	1.03	148.73	0.11	3.14	0.91	1.92E-03	7
FD-15	Starbd Deck Crane	365 hp	66.36	498.60	1.03	1.03	148.73	0.11	3.14	0.91	1.92E-03	7
FD-16	Cementing Unit	335 hp	17.45	131.09	1.42	1.42	57.75	0.03	3.23	0.99	5.06E-04	7
FD-17	Cementing Unit	335 hp	17.45	131.09	1.42	1.42	57.75	0.03	3.23	0.99	5.06E-04	7
FD-18	Cementing Unit	147 hp	7.66	57.52	0.62	0.62	25.34	0.01	1.42	0.43	2.22E-04	7
FD-19	Logging Winch	128 hp	0.00	0.00	0.00	0.00	0.00	0.00	0.00	0.00	0.00E+00	7, 8
FD-20	Logging Winch	36 kW	0.00	0.00	0.00	0.00	0.00	0.00	0.00	0.00	0.00E+00	7, 8, 9
FD-21	Heat Boiler	7.97 MMBtu/hr	191.28	1,437.14	4.50	4.50	38.50	0.31	14.80	0.27	1.72E-03	
FD-22	Heat Boiler	7.97 MMBtu/hr	191.28	1,437.14	4.50	4.50	38.50	0.31	14.80	0.27	1.72E-03	
FD-23	Incinerator	276 lb/hr			5.33	4.55	3.25	1.63	20.15	1.95	0.14	
FD-31	Resupply Ship - docked		24.53	184.29	7.60	7.60	108.17	4.96	23.30	8.58	7.11E-04	
	Discoverer total while drilling		1,837.64	13,806.66	69.84	69.06	1000.54	9.47	354.46	276.96	1.84E-01	

Daily Fleet Maximum Emissions

Resupply - in Transit 4 hr/day

		Max fuel consumpt. (MMBtu/day)	Fuel Use gal/day	Maximum Emissions (lb/day) [2] PM_{10}	$PM_{2.5}$	NO_x	SO_2	CO	VOC	Lead	Notes
Ice Breaker											
IB ICE Engines		4,527.36	34,015.24	1127.93	996.02	26,602.13	994.14	3557.21	638.45	1.31E-01	
IB Incinerators	154 lb/hr			24.58	16.82	5.54	4.62	554.40	184.80	3.94E-01	
Ice Breaker Total		4,527.36	34,015.24	1152.51	1012.84	26,607.68	998.76	4111.61	823.25	5.25E-01	
Anchor Handler											
AH ICE Engines		4,323.86	32,486.30	254.06	254.06	2,188.78	949.46	3,556.90	408.53	1.25E-01	
AH Boiler		96.00	721.27	2.38	2.38	4.94	21.52	3.61	0.14	8.64E-04	
AH Incinerator	151 lb/hr			24.14	16.51	9.07	4.54	544.44	181.48	3.87E-01	
Anchor Handler Total		4,419.86	33,207.58	280.58	272.96	2,202.80	975.51	4104.94	590.16	5.13E-01	
Total Ice Management Fleet		*8,947.22*	*67,222.81*	*1433.09*	*1285.79*	*28,810.47*	*1974.27*	*8216.55*	*1413.41*	*1.04E+00*	
Resupply Ship - in Transit		*177.63*	1,334.60	*80.16*	*64.29*	*1,060.44*	*39.01*	*139.57*	*25.05*	*5.15E-03*	
OSR Fleet											
OSR Main Ship ICE Propulsion Engines		399.29	3,000.00	2.64	2.64	1,412.03	0.64	7.57	10.27	1.16E-02	7, 10
OSR Main Ship ICE Generators		106.48	800.00	7.21	5.78	635.66	0.17	8.37	1.50	3.09E-03	7, 10
OSR Main Ship Incinerator	125 lb/hr			19.95	13.65	4.50	3.75	450.00	150.00	3.20E-01	
OSR Main Ship Total		505.77	3,800.00	29.80	22.08	2,052.20	4.56	465.94	161.77	3.34E-01	
OSR Work Boat ICE Propulsion Engines		302.40	2,272.01	7.33	7.33	442.29	61.09	14.76	7.43	8.77E-03	
OSR Work Boat ICE Generators		6.05	45.44	1.87	1.87	26.67	1.22	5.75	2.12	1.75E-04	
OSR Work Boats Total		308.45	2,317.45	9.21	9.21	468.96	62.31	20.51	9.55	8.94E-03	
OSR Total		*814.22*	*6,117.45*	*39.01*	*31.28*	*2,521.16*	*66.87*	*486.44*	*171.31*	*3.43E-01*	
	Total All Fleet	9,939.07	74,674.86	1552.26	1381.37	32,392.07	2080.15	8842.57	1609.77	1.39E+00	
	Total All	11,776.71	88,481.52	1622.09	1450.43	33,392.61	2089.62	9197.03	1886.74	1.57E+00	

Notes

1 Operating Scenario #2: No HPU use that day and incineration is limited to 1300 lb feed per day.
2 All emissions are the maximum 24-hour values
3 Units FD-1-6 (Generator Engines) instantaneous capacity restriction, SCR NOx control effectiveness and Oxidation Catalyst reduction efficiencies applied
4 Not used during drilling 0%
5 Unit FD-8 (Emergency Generator) operation assumed for 120 min/week
6 Units FD-9-11 (MLC Compressors) are Tier 3 engines
7 CDPF PM & CO reduction efficiencies applied
8 Units FD-19 & 20 (Logging Winches) cannot operate simultaneously with cementing units, emissions combined with cementing units. 0%
9 Unit FD-20 (Logging Winch) is a Tier 2 engine
10 OSR Main Ship Propulsion and Generator Engines restriction applied

Air Sciences Inc.	PROJECT TITLE: Shell Offshore, Inc.	BY: S. Pryor
	PROJECT NO: 180-15-1	PAGE: 17 / OF: 21
ENGINEERING CALCULATIONS	SUBJECT: Discoverer Emissions-AK OCS	DATE: September 17, 2009

Base Operating Case

Yearly Discoverer Maximum Emissions

Time at Drill Site	168 days/yr	4032 hrs/yr	Units FD-14 & 15	63 days/year	1512 hrs/yr		
Unit FD-8	120 min/week	48 hrs/yr	Unit FD-23	300 lb/trash per day			
Units FD-9-11	63 days/yr	1512 hrs/yr	Unit FD-31	12 hr/day	8 days/year	96 hrs/yr	
Units FD-12-13	63 days/yr	1512 hrs/yr					

Unit ID	Description	Rating	Max fuel consumpt. (MMBtu/yr)	Fuel Use gal/yr	Maximum Emissions (ton/yr) PM_{10}	$PM_{2.5}$	NO_x	SO_2	CO	VOC	Lead	HAPs	Notes
Frontier Discoverer													
FD-1	Generator Engine	1,325 hp	27,878	209,457	0.40	0.40	1.56	2.22E-02	0.56	0.07	4.04E-04	1.70E-02	1
FD-2	Generator Engine	1,325 hp	27,878	209,457	0.40	0.40	1.56	2.22E-02	0.56	0.07	4.04E-04	1.70E-02	1
FD-3	Generator Engine	1,325 hp	27,878	209,457	0.40	0.40	1.56	2.22E-02	0.56	0.07	4.04E-04	1.70E-02	1
FD-4	Generator Engine	1,325 hp	27,878	209,457	0.40	0.40	1.56	2.22E-02	0.56	0.07	4.04E-04	1.70E-02	1
FD-5	Generator Engine	1,325 hp	27,878	209,457	0.40	0.40	1.56	2.22E-02	0.56	0.07	4.04E-04	1.70E-02	1
FD-6	Generator Engine	1,325 hp	27,878	209,457	0.40	0.40	1.56	2.22E-02	0.56	0.07	4.04E-04	1.70E-02	1
FD-7	Propulsion Engine	7,200 hp	0	0	0.00	0.00	0.00	0.00E+00	0.00	0.00	0.00E+00	0.00E+00	2
FD-8	Em Generator	131 hp	44	331	1.53E-02	1.53E-02	7.82E-02	3.51E-05	4.30E-02	8.06E-03	6.38E-07	8.65E-05	3
FD-9	MLC Compressor	540 hp	5,413	40,673	0.13	0.13	2.69	4.32E-03	2.35	2.69	7.85E-05	1.06E-02	4
FD-10	MLC Compressor	540 hp	5,413	40,673	0.13	0.13	2.69	4.32E-03	2.35	2.69	7.85E-05	1.06E-02	4
FD-11	MLC Compressor	540 hp	0	0	0.00	0.00	0.00	0.00E+00	0.00	0.00	0.00E+00	0.00E+00	2, 4
FD-12	HPU Engine	250 hp	2,951	22,169	0.08	0.08	4.09	2.35E-03	0.12	0.06	4.28E-05	6.55E-04	5, 6
FD-13	HPU Engine	250 hp	2,951	22,169	0.08	0.08	4.09	2.35E-03	0.12	0.06	4.28E-05	6.55E-04	5, 6
FD-14	Port Deck Crane	365 hp	4,181	31,412	0.03	0.03	4.68	3.33E-03	0.10	0.03	6.06E-05	9.29E-04	5, 7
FD-15	Starbd Deck Crane	365 hp	4,181	31,412	0.03	0.03	4.68	3.33E-03	0.10	0.03	6.06E-05	9.29E-04	5, 7
FD-16	Cementing Unit	335 hp	2,931	22,022	0.12	0.12	4.85	2.34E-03	0.27	0.08	4.25E-05	6.51E-04	5, 8
FD-17	Cementing Unit	335 hp	2,931	22,022	0.12	0.12	4.85	2.34E-03	0.27	0.08	4.25E-05	6.51E-04	5, 8
FD-18	Cementing Unit	147 hp	1,286	9,664	0.05	0.05	2.13	1.03E-03	0.12	0.04	1.86E-05	2.86E-04	5, 8
FD-19	Logging Winch	128 hp	0	0	0.00	0.00	0.00	0.00E+00	0.00	0.00	0.00E+00	0.00E+00	5, 9
FD-20	Logging Winch	36 kW	0	0	0.00	0.00	0.00	0.00E+00	0.00	0.00	0.00E+00	0.00E+00	5, 9
FD-21	Heat Boiler	7.97 MMBtu/hr	32,135	241,439	0.38	0.38	3.23	2.56E-02	1.24	0.02	1.45E-04	5.32E-03	
FD-22	Heat Boiler	7.97 MMBtu/hr	32,135	241,439	0.38	0.38	3.23	2.56E-02	1.24	0.02	1.45E-04	5.32E-03	
FD-23	Incinerator	276 lb/hr			0.10	0.09	0.06	0.03	0.39	0.04	2.68E-03	3.16E-03	
FD-31	Resupply Ship - docked		196	1,474	0.03	0.03	0.43	0.02	0.09	0.03	2.85E-06	3.86E-04	10
	Discoverer total while drilling		264,019	1,983,644	4.06	4.05	51.15	0.26	12.17	6.31	5.87E-03	1.42E-01	

Yearly Fleet Maximum Emissions

IB & AH - For NOx ICE Engines only	38%	of	168 days/year	1532 hrs/yr	
IB & AH - For all remaining pollutants	100%	of	168 days/year	4032 hrs/yr	
Resupply - in Transit	8 trips/yr		4 hr/trip	32 hrs/yr	

		Max fuel consumpt. (MMBtu/yr)	Fuel Use gal/yr	Maximum Emissions (ton/yr) PM_{10}	$PM_{2.5}$	NO_x	SO_2	CO	VOC	Lead	HAPs	Notes
Ice Breaker												
IB ICE Engines		760,596	5,714,560	95	84	849	84	299	54	1.10E-02	1.49	11
IB Incinerators	154 lb/hr			2.06	1.41	0.47	0.39	46.57	15.52	3.31E-02	3.89E-02	
Ice Breaker Total		760,596	5,714,560	97	85	850	84	345	69	4.41E-02	1.53	
Anchor Handler												
AH ICE Engines		726,409	5,457,699	21.34	21.34	69.87	79.75	298.78	34.32	1.05E-02	1.43	12
AH Boiler		16,128	121,174	0.20	0.20	0.42	1.81	0.30	0.01	7.26E-05	2.67E-03	12
AH Incinerator	151 lb/hr			2.03	1.39	0.76	0.38	45.73	15.24	3.25E-02	3.82E-02	
Anchor Handler Total		742,537	5,578,873	23.57	22.93	71.04	81.94	344.82	49.57	4.31E-02	1.47	
Total Ice Management Fleet		*1,503,133*	*11,293,433*	*120.38*	*108.01*	*920.65*	*165.84*	*690.19*	*118.73*	*8.72E-02*	*3.00*	
Resupply Ship - in Transit		*1,421*	*10,677*	*0.32*	*0.26*	*4.24*	*0.16*	*0.56*	*0.10*	*2.06E-05*	*2.79E-03*	13
OSR Fleet												
OSR Main Ship ICE Propulsion Engines		67,081.39	504,000	0.22	0.22	118.61	0.05	0.64	0.86	9.73E-04	1.32E-02	5, 14
OSR Main Ship ICE Generators		17,888.37	134,400	0.61	0.49	53.40	0.01	0.70	0.13	2.59E-04	3.52E-03	5, 14
OSR Main Ship Incinerator	125 lb/hr			1.68	1.15	0.38	0.32	37.80	12.60	2.68E-02	3.16E-02	
OSR Main Ship Total		84,970	638,400	2.50	1.85	172.38	0.38	39.14	13.59	2.81E-02	4.83E-02	
OSR Work Boats Total		51,819	389,332	0.77	0.77	39.39	5.23	1.72	0.80	7.51E-04	1.02E-01	
OSR Total		*136,789*	*1,027,732*	*3*	*3*	*212*	*6*	*41*	*14*	*2.88E-02*	*1.50E-01*	
Total All Fleet		1,641,343	12,331,841	124	111	1,137	172	732	133	1.16E-01	3.16	
Total All		1,905,362	14,315,485	128	115	1,188	172	744	140	1.22E-01	3.30	

Notes definitions see page 20

Units	FD-1-6,each	FD-1-6,total	FD-7	FD-8	FD-9	FD-10	FD-11	FD-12	FD-13	FD-14	FD-15	FD-16	FD-17	FD-18	FD-19	FD-20	FD-21	FD-22	FD-23	TOTAL
											MMBtu/yr									
Fuel Consumption	27,878	167,270	0	44	5,413	5,413	0	2,951	2,951	4,181	4,181	2,931	2,931	1,286	0	0	32,135	32,135		
HAPs											ton/yr									
Acaldehyde	3.21E-03	1.92E-02	0.00	1.69E-05	2.08E-03	2.08E-03	0.00	1.13E-04	1.13E-04	1.60E-04	1.60E-04	1.12E-04	1.12E-04	4.93E-05	0.00	0.00	0.00E+00	0.00E+00	0.00E+00	**2.42E-02**
Acenaphthene	5.94E-06	3.56E-05	0.00	3.13E-08	3.84E-06	3.84E-06	0.00	2.09E-07	2.09E-07	2.97E-07	2.97E-07	2.08E-07	2.08E-07	9.13E-08	0.00	0.00	2.55E-06	2.55E-06	0.00E+00	**5.00E-05**
Acenaphthylene	2.12E-05	1.27E-04	0.00	1.11E-07	1.37E-05	1.37E-05	0.00	7.47E-07	7.47E-07	1.06E-06	1.06E-06	7.42E-07	7.42E-07	3.25E-07	0.00	0.00	3.05E-08	3.05E-08	0.00E+00	**1.60E-04**
Acrolein	3.87E-04	2.32E-03	0.00	2.04E-06	2.50E-04	2.50E-04	0.00	1.36E-05	1.36E-05	1.93E-05	1.93E-05	1.36E-05	1.36E-05	5.95E-06	0.00	0.00	0.00E+00	0.00E+00	0.00E+00	**2.92E-03**
Anthracene	7.82E-06	4.69E-05	0.00	4.12E-08	5.06E-06	5.06E-06	0.00	2.76E-07	2.76E-07	3.91E-07	3.91E-07	2.74E-07	2.74E-07	1.20E-07	0.00	0.00	1.47E-07	1.47E-07	0.00E+00	**5.94E-05**
Benzene	3.90E-03	2.34E-02	0.00	2.05E-05	2.53E-03	2.53E-03	0.00	1.38E-04	1.38E-04	1.95E-04	1.95E-04	1.37E-04	1.37E-04	6.00E-05	0.00	0.00	2.58E-05	2.58E-05	0.00E+00	**2.95E-02**
Benzo(a)anthracene	7.03E-06	4.22E-05	0.00	3.70E-08	4.55E-06	4.55E-06	0.00	2.48E-07	2.48E-07	3.51E-07	3.51E-07	2.46E-07	2.46E-07	1.08E-07	0.00	0.00	4.84E-07	4.84E-07	0.00E+00	**5.41E-05**
Benzo(a)pyrene	7.86E-07	4.72E-06	0.00	4.14E-09	5.09E-07	5.09E-07	0.00	2.77E-08	2.77E-08	3.93E-08	3.93E-08	2.76E-08	2.76E-08	1.21E-08	0.00	0.00	0.00E+00	0.00E+00	0.00E+00	**5.94E-06**
Benzo(b)fluoranthene	4.14E-07	2.49E-06	0.00	2.18E-09	2.68E-07	2.68E-07	0.00	1.46E-08	1.46E-08	2.07E-08	2.07E-08	1.45E-08	1.45E-08	6.37E-09	0.00	0.00	0.00E+00	0.00E+00	0.00E+00	**3.13E-06**
Benzo(b,k)fluoranthene	0.00	0.00	0.00	0.00	0.00	0.00	0.00	0.00	0.00	0.00	0.00	0.00	0.00	0.00	0.00	0.00	1.79E-07	1.79E-07	0.00E+00	**3.57E-07**
Benzo(g,h,I)perylene	2.04E-06	1.23E-05	0.00	1.08E-08	1.32E-06	1.32E-06	0.00	7.21E-08	7.21E-08	1.02E-07	1.02E-07	7.17E-08	7.17E-08	3.14E-08	0.00	0.00	2.73E-07	2.73E-07	0.00E+00	**1.60E-05**
Benzo(k)fluoranthene	6.48E-07	3.89E-06	0.00	3.41E-09	4.20E-07	4.20E-07	0.00	2.29E-08	2.29E-08	3.24E-08	3.24E-08	2.27E-08	2.27E-08	9.97E-09	0.00	0.00	0.00E+00	0.00E+00	0.00E+00	**4.90E-06**
1,3-Butadiene	1.64E-04	9.81E-04	0.00	8.61E-07	1.06E-04	1.06E-04	0.00	5.77E-06	5.77E-06	8.17E-06	8.17E-06	5.73E-06	5.73E-06	2.51E-06	0.00	0.00	0.00E+00	0.00E+00	0.00E+00	**1.24E-03**
Chrysene	1.48E-06	8.86E-06	0.00	7.77E-09	9.55E-07	9.55E-07	0.00	5.21E-08	5.21E-08	7.38E-08	7.38E-08	5.17E-08	5.17E-08	2.27E-08	0.00	0.00	2.87E-07	2.87E-07	0.00E+00	**1.17E-05**
Dibenz(a,h)anthracene	2.44E-06	1.46E-05	0.00	1.28E-08	1.58E-06	1.58E-06	0.00	8.60E-08	8.60E-08	1.22E-07	1.22E-07	8.54E-08	8.54E-08	3.75E-08	0.00	0.00	2.02E-07	2.02E-07	0.00E+00	**1.88E-05**
Ethylbenzene	0.00	0.00	0.00	0.00	0.00	0.00	0.00	0.00	0.00	0.00	0.00	0.00	0.00	0.00	0.00	0.00	7.68E-06	7.68E-06	0.00E+00	**1.54E-05**
Fluoranthene	3.18E-05	1.91E-04	0.00	1.67E-07	2.06E-05	2.06E-05	0.00	1.12E-06	1.12E-06	1.59E-06	1.59E-06	1.12E-06	1.12E-06	4.89E-07	0.00	0.00	5.84E-07	5.84E-07	0.00E+00	**2.42E-04**
Fluorene	1.22E-04	7.33E-04	0.00	6.43E-07	7.90E-05	7.90E-05	0.00	4.31E-06	4.31E-06	6.10E-06	6.10E-06	4.28E-06	4.28E-06	1.88E-06	0.00	0.00	5.40E-07	5.40E-07	0.00E+00	**9.24E-04**
Formaldehyde	4.93E-03	2.96E-02	0.00	2.60E-05	3.19E-03	3.19E-03	0.00	1.74E-04	1.74E-04	2.47E-04	2.47E-04	1.73E-04	1.73E-04	7.59E-05	0.00	0.00	3.98E-03	3.98E-03	0.00E+00	**4.53E-02**
Indeno(1,2,3-cd)pyrene	1.57E-06	9.41E-06	0.00	8.25E-09	1.02E-06	1.02E-06	0.00	5.53E-08	5.53E-08	7.84E-08	7.84E-08	5.50E-08	5.50E-08	2.41E-08	0.00	0.00	2.58E-07	2.58E-07	0.00E+00	**1.24E-05**
Naphthalene	3.55E-04	2.13E-03	0.00	1.87E-06	2.30E-04	2.30E-04	0.00	1.25E-05	1.25E-05	1.77E-05	1.77E-05	1.24E-05	1.24E-05	5.45E-06	0.00	0.00	1.36E-04	1.36E-04	0.00E+00	**2.95E-03**
Phenanthrene	1.23E-04	7.38E-04	0.00	6.47E-07	7.96E-05	7.96E-05	0.00	4.34E-06	4.34E-06	6.15E-06	6.15E-06	4.31E-06	4.31E-06	1.89E-06	0.00	0.00	1.27E-06	1.27E-06	0.00E+00	**9.31E-04**
Pyrene	2.00E-05	1.20E-04	0.00	1.05E-07	1.29E-05	1.29E-05	0.00	7.05E-07	7.05E-07	9.99E-07	9.99E-07	7.01E-07	7.01E-07	3.07E-07	0.00	0.00	5.13E-07	5.13E-07	0.00E+00	**1.52E-04**
Toluene	1.71E-03	1.03E-02	0.00	9.00E-06	1.11E-03	1.11E-03	0.00	6.03E-05	6.03E-05	8.55E-05	8.55E-05	5.99E-05	5.99E-05	2.63E-05	0.00	0.00	7.48E-04	7.48E-04	0.00E+00	**1.44E-02**
Xylenes	1.19E-03	7.15E-03	0.00	6.27E-06	7.71E-04	7.71E-04	0.00	4.20E-05	4.20E-05	5.96E-05	5.96E-05	4.18E-05	4.18E-05	1.83E-05	0.00	0.00	0.00E+00	0.00E+00	0.00E+00	**9.01E-03**
o-Xylene	0.00	0.00	0.00	0.00	0.00	0.00	0.00	0.00	0.00	0.00	0.00	0.00	0.00	0.00	0.00	0.00	1.32E-05	1.32E-05	0.00E+00	**2.63E-05**
Metals																				
Arsenic	6.83E-05	4.10E-04	0.00	1.08E-07	1.33E-05	1.33E-05	0.00	7.23E-06	7.23E-06	1.02E-05	1.02E-05	7.18E-06	7.18E-06	3.15E-06	0.00	0.00	6.43E-05	6.43E-05	5.51E-05	**6.73E-04**
Cadmium	1.53E-04	9.20E-04	0.00	2.42E-07	2.98E-05	2.98E-05	0.00	1.62E-05	1.62E-05	2.30E-05	2.30E-05	1.61E-05	1.61E-05	7.07E-06	0.00	0.00	4.82E-05	4.82E-05	1.37E-04	**1.33E-03**
Chromium	3.67E-05	2.20E-04	0.00	5.79E-08	7.12E-06	7.12E-06	0.00	3.88E-06	3.88E-06	5.50E-06	5.50E-06	3.85E-06	3.85E-06	1.69E-06	0.00	0.00	4.82E-05	4.82E-05	1.13E-04	**4.72E-04**
Lead	4.04E-04	2.43E-03	0.00	6.38E-07	7.85E-05	7.85E-05	0.00	4.28E-05	4.28E-05	6.06E-05	6.06E-05	4.25E-05	4.25E-05	1.86E-05	0.00	0.00	1.45E-04	1.45E-04	2.68E-03	**5.87E-03**
Mercury	8.64E-05	5.19E-04	0.00	1.36E-07	1.68E-05	1.68E-05	0.00	9.15E-06	9.15E-06	1.30E-05	1.30E-05	9.09E-06	9.09E-06	3.99E-06	0.00	0.00	4.82E-05	4.82E-05	7.06E-05	**7.86E-04**
Nickel	4.29E-05	2.58E-04	0.00	6.78E-08	8.34E-06	8.34E-06	0.00	4.54E-06	4.54E-06	6.44E-06	6.44E-06	4.51E-06	4.51E-06	1.98E-06	0.00	0.00	4.82E-05	4.82E-05	9.89E-05	**5.03E-04**
Total HAPs	**0.017**	**0.102**	**0.000**	**0.000**	**0.011**	**0.011**	**0.000**	**0.001**	**0.001**	**0.001**	**0.001**	**0.001**	**0.001**	**0.000**	**0.000**	**0.000**	**0.005**	**0.005**	**0.003**	**0.14**

Emission Factors, Conversions and Assumptions

Conversions

1.340	hp/kW	3600	sec/hour	2	wt. conversion of S to SO2
454	g/lb	2000	lb/ton	264	gal/m^3

Assumptions				Reference
Diesel heat value	133,098	Btu/gal	0.1331 MMBtu/gal	Keiser, Ronald email to Chris Tengco, 01/26/09.
Diesel density	847.9	kg/m^3	7.08 lb/gal	SCANRAFF-Vladimir Ignatjuk Certificate of Quality. 09/19/04.

Diesel Heat Rates							Reference
Caterpillar D399 engines	237.5	g/kW-hr	7,350	Btu/hp-hr	0.0073	MMBtu/hp-hr	Caterpillar D399 SCAC Engine Data Sheet, 05/95
							100% load at 1200RPM value
Caterpillar D343 engines	244.8	g/kW-hr	7,576	Btu/hp-hr	0.0076	MMBtu/hp-hr	Caterpillar D343 Engine Data Sheet, 05/95
							100% load at 2100 RPM value, T Prechamber Engines
Caterpillar C15 engines			26.9	gal/hr	0.0066	MMBtu/hp-hr	Caterpillar C15 Specification Sheet, LEHW7443-000, 2008
Detroit 8V-71N engines			0.415	lb/hp-hr	0.0078	MMBtu/hp-hr	Detroit Diesel, Engine Performance Model: 8V-71N, 10/15/81
John Deere 4024TF270			17.9	lb/hr	0.0070	MMBtu/hp-hr	John Deere Model 4024TF270 Engine Performance, 06/04
Caterpillar 3608 engines	204.7	g/kW-hr	6,335	Btu/hp-hr	0.0063	MMBtu/hp-hr	Caterpillar 3608 Specification Sheet, DM5529, 10/06
ICE engines			7,000	Btu/hp-hr	0.0070	MMBtu/hp-hr	AP42 Table 3.3-1, 10/96

NOx Factors - converted at 133098 Btu/gal

Description	EF		EF		EF		Reference
Discoverer generator engines (Cat/D399)			0.5	g/kW-hr	0.112	lb/MMBtu	D.E.C. Marine AB letter, 10/9/08
Discoverer propulsion engine					3.2	lb/MMBtu	AP42 Table 3.4-1, 10/96
Discoverer emergency generator (Cat/3304)			11.28	g/bhp-hr	3.553	lb/MMBtu	Max of 13 test from EPA/600/8-90/057F
Discoverer MLC Compressors (Cat/C-15)			4.0	g/kW-hr	0.993	lb/MMBtu	Tier 3 emission limit
Discoverer HPU Engines (Detroit/8V71)			9.81	g/bhp-hr	2.771	lb/MMBtu	Max of 4 test from EPA/600/8-90/057F
Discoverer Cranes (Cat/D343)	2810.9	g/hr	1.70E-02	lb/hp-hr	2.241	lb/MMBtu	Caterpillar D343 Engine Data Sheet, 05/95
Discoverer Cementing & Logging 71 series engines			11.72	g/bhp-hr	3.310	lb/MMBtu	Max of 8 test from EPA/600/8-90/057F
Discoverer John Deere Logging Winch			7.5	g/kW-hr	1.768	lb/MMBtu	Tier 2 emission limit
Discoverer boilers			38.5	lb/day	0.201	lb/MMBtu	Clayton Industries, 8/2001
Discoverer Incinerator			5	lb/ton	0.0025	lb/lb	AP42 Table 2.2-1, multiple hearth
Resupply Ship-docked & OSR Work Boat Generators					4.41	lb/MMBtu	AP42 Table 3.3-1, 10/96
Ice Management Fleet factor			25	g/kW-hr	5.876	lb/MMBtu	generic factors consistent w/Ice mgmt fleet ORRs
All Other Incinerators			3	lb/ton	0.0015	lb/lb	AP42 Table 2.1-12, 10/96
Resupply-transit & OSR Main Ship ICE Generators			25.4	g/kW-hr	5.970	lb/MMBtu	EPA Memo, D. Meyer, June 12, 2008
OSR Main Ship ICE Propulsion (Cat/3608)			13.62	g/kW-hr	3.536	lb/MMBtu	Caterpillar 3608 Specification Sheet, DM5529, 10/06
OSR Work Boat ICE Propulsion Engines			4.644	g/hp-hr	1.463	lb/MMBtu	Cummins Engine Model: QSB5.9-305 MCD Spec Sheet, 10/06

PM Factors

Description	EF		EF		EF		Reference
PM_{10}							
Discoverer generator engines (Cat/D399)	251.2	g/hr	4.18E-04	lb/hp-hr	0.057	lb/MMBtu	Caterpillar D399 SCAC Engine Data Sheet, 05/95
Discoverer propulsion engine					0.0573	lb/MMBtu	AP42 Table 3.4-2, 10/96
Discoverer emergency generator (Cat/3304)			2.21	g/bhp-hr	0.696	lb/MMBtu	Max of 13 test from EPA/600/8-90/057F
Discoverer MLC Compressors (Cat/C-15)			0.2	g/kW-hr	0.050	lb/MMBtu	Tier 3 emission limit
Discoverer HPU Engines (Detroit/8V71)			1.26	g/bhp-hr	0.356	lb/MMBtu	Max of 4 test from EPA/600/8-90/057F
Discoverer Cranes (Cat/D343)	129.8	g/hr	7.84E-04	lb/hp-hr	0.103	lb/MMBtu	Caterpillar D343 Engine Data Sheet, 05/95
Discoverer Cementing & Logging 71 series engines			1.92	g/bhp-hr	0.542	lb/MMBtu	Max of 8 test from EPA/600/8-90/057F
Discoverer John Deere Logging Winch			0.6	g/kW-hr	0.141	lb/MMBtu	Tier 2 emission limit
Discoverer boilers			4.5	lb/day	0.024	lb/MMBtu	Clayton Industries, 8/2001
Discoverer Incinerator			8.2	lb/ton	0.0041	lb/lb	ORR
Resupply Ship-docked & OSR Work Boat Generators					0.31	lb/MMBtu	AP42 Table 3.3-1, 10/96
Ice Management ICE Engines			1.06	g/kW-hr	0.249	lb/MMBtu	generic factors consistent w/Ice mgmt fleet ORRs
Ice Management & OSR Incinerators			13.3	lb/ton	0.0067	lb/lb	AP42 Table 2.1-12, 10/96 & Appendix B.1 2.1
Resupply-transit & OSR Main Ship ICE Generators			1.92	g/kW-hr	0.451	lb/MMBtu	Corbett, Koehler. Revised: 05/03
OSR Main Ship ICE Propulsion (Cat/3608)			0.17	g/kW-hr	0.044	lb/MMBtu	Caterpillar 3608 Specification Sheet, DM5529, 10/06
OSR Work Boat ICE Propulsion Engines			0.077	g/hp-hr	0.024	lb/MMBtu	Cummins Engine Model: QSB5.9-305 MCD Spec Sheet, 10/06

$PM_{2.5}$

All emissions units 100% PM_{10} except the following:

Discoverer Incinerator	7	lb/ton	0.0035	lb/lb	ORR
Ice Management ICE Engines			0.22	lb/MMBtu	generic factors consistent w/Ice mgmt fleet ORRs
Ice Management & OSR Incinerators	9.1	lb/ton	0.0046	lb/lb	AP42 Table 2.1-12, 10/96 & Appendix B.1 2.1
Resupply-transit & OSR Main Ship ICE Generators	1.54	g/kW-hr	0.362	lb/MMBtu	EPA Ref: IVL

SO_2 Factors- (Diesel Fuel)	S content	EF		EF		Reference
Discoverer & OSR Main Ship	0.0015% by wt.	0.00003	lb/lb fuel	0.0016	lb/MMBtu	Calculation
Resupply-Docked, OSR Work Boats	0.19% by wt.	0.0038	lb/lb fuel	0.2020	lb/MMBtu	Calculation
Ice Mnge. ICE, Resupply-Transit	0.19% by wt.	8.09E-03 S	lb/hp-hr	0.2196	lb/MMBtu	AP42 Table 3.4-1, 10/96
Discoverer Incinerator		2.5	lb/ton	0.0013	lb/lb	ORR
All Other Incinerators		2.5	lb/ton	0.0013	lb/lb	AP42 Table 2.1-12, 10/96

CO Factors	EF	EF		EF		Reference
Discoverer generator engines (Cat/D399)	882.7 g/hr	1.47E-03	lb/hp-hr	0.200	lb/MMBtu	Caterpillar D399 SCAC Engine Data Sheet, 05/95
Disco Prop., Ice Mngt ICE, Resupply-transit, OSR Main Gen.		5.50E-03	lb/hp-hr	0.786	lb/MMBtu	AP42 Table 3.4-1, 10/96
Discoverer emergency generator (Cat/3304)		6.2	g/bhp-hr	1.953	lb/MMBtu	Max of 13 test from EPA/600/8-90/057F
Discoverer MLC Compressors (Cat/C-15)		3.5	g/kW-hr	0.868	lb/MMBtu	Tier 3 emission limit
Discoverer HPU Engines (Detroit/8V71)		2.99	g/bhp-hr	0.844	lb/MMBtu	Max of 2 test from EPA/600/8-90/057F
Discoverer Cranes (Cat/D343)	593.6 g/hr	3.59E-03	lb/hp-hr	0.473	lb/MMBtu	Caterpillar D343 Engine Data Sheet, 05/95
Discoverer Cementing & Logging 71 series engines		6.55	g/bhp-hr	1.850	lb/MMBtu	Max of 6 test from EPA/600/8-90/057F
Discoverer John Deere Logging Winch		5.5	g/kW-hr	1.296	lb/MMBtu	Tier 2 emission limit
Discoverer boilers		14.8	lb/day	0.077	lb/MMBtu	Clayton Industries, 8/2001
Discoverer Incinerator		31	lb/ton	0.0155	lb/lb	AP42 Table 2.2-1, multiple hearth
All Other Incinerators		300	lb/ton	0.1500	lb/lb	AP42 Table 2.1-12, 10/96
Resupply Ship-docked & OSR Work Boat Generators				0.95	lb/MMBtu	AP42 Table 3.3-1, 10/96
OSR Main Ship ICE Propulsion (Cat/3608)		0.73	g/kW-hr	0.190	lb/MMBtu	Caterpillar 3608 Specification Sheet, DM5529, 10/06
OSR Work Boat ICE Propulsion Engines		0.155	g/hp-hr	0.049	lb/MMBtu	Cummins Engine Model: QSB5.9-305 MCD Spec Sheet, 10/06

VOC Factors	EF		EF		Reference
Discoverer generator engines (Cat/D399)	75.5	g/hr	0.017	lb/MMBtu	Caterpillar D399 SCAC Engine Data Sheet, 05/95
Discoverer propulsion engine			0.09	lb/MMBtu	AP42 Table 3.4-1, 10/96
Discoverer emergency generator (Cat/3304)	1.2	g/bhp-hr	0.366	lb/MMBtu	Max of 13 test from EPA/600/8-90/057F
Discoverer MLC Compressors (Cat/C-15)	4.0	g/kW-hr	0.993	lb/MMBtu	Tier 3 emission limit
Discoverer HPU Engines (Detroit/8V71)	1.5	g/bhp-hr	0.418	lb/MMBtu	Max of 2 test from EPA/600/8-90/057F
Discoverer Cranes (Cat/D343)	172.6	g/hr	0.138	lb/MMBtu	Caterpillar D343 Engine Data Sheet, 05/95
Discoverer Cementing & Logging 71 series engines	2.01	g/bhp-hr	0.568	lb/MMBtu	Max of 6 test from EPA/600/8-90/057F
Discoverer John Deere Logging Winch	7.5	g/kW-hr	1.768	lb/MMBtu	Tier 2 emission limit
Discoverer boilers	0.27	lb/day	0.001	lb/MMBtu	Clayton Industries, 8/2001
Discoverer Incinerator	3	lb/ton	0.0015	lb/lb	AP42 Table 2.1-12, 10/96
Ice Mngt ICE, Resupply-transit & OSR Main Gen.	0.6	g/kW-hr	0.141	lb/MMBtu	Corbett, Koehler. Revised: 05/03
All Other Incinerators	100	lb/ton	0.0500	lb/lb	AP42 Table 2.1-12, 10/96
Resupply Ship-docked & OSR Work Boat Generators			0.35	lb/MMBtu	AP42 Table 3.3-1, 10/96
OSR Main Ship ICE Propulsion (Cat/3608)	0.99	g/kW-hr	0.257	lb/MMBtu	Caterpillar 3608 Specification Sheet, DM5529, 10/06
OSR Work Boat ICE Propulsion Engines	0.078	g/hp-hr	0.025	lb/MMBtu	Cummins Engine Model: QSB5.9-305 MCD Spec Sheet, 10/06

Yearly Table Page 17 Notes

1 Units FD-1-6 (Generator Engines) instantaneous capacity restriction, SCR NOx control effectiveness and Oxidation Catalyst reduction efficiencies applied
2 Not used during drilling
3 Unit FD-8 (Emergency Generator) operation assumed for 120 min/week
4 Units FD-9-11 (MLC Compressors) operational restriction applied
5 CDPF PM & CO reduction efficiencies applied
6 Units FD-12 & FD-13 (HPU Engines) operational restriction applied
7 Units FD-14 & 15 (Cranes) operating restriction applied
8 Units FD-16, 17 & 18 (Cementing units) operating capacity restriction applied
9 Units FD-19 & 20 (Logging Winches) cannot operate simultaneously with cementing units, emissions combined with cementing units. 0%
10 Resupply Ship-docked maximum use 12 hr/day , 8 days/yr
11 ICE Engine NOx emissions are calculated at 38% of 168 days/yr, Remaining are calculated at 100% of 168 days/yr
12 #REF!
13 Resupply Ship-transit maximum use 8 trips/yr , 4 hr/trip
14 OSR Main Ship Propulsion and Generator Engines restriction applied

HAPs Emission Factors -(from AP42)

ICE Engines Emission Factors

AP42 Table 3.3-2, Speciated Organic Compound Emission Factors For Uncontrolled Diesel Engines

Pollutant	EF lb/MMBtu
Acaldehyde	7.67E-04
Acenaphthene	1.42E-06
Acenaphthylene	5.06E-06
Acrolein	9.25E-05
Anthracene	1.87E-06
Benzene	9.33E-04
Benzo(a)anthracene	1.68E-06
Benzo(a)pyrene	1.88E-07
Benzo(b)fluoranthene	9.91E-08
Benzo(g,h,I)perylene	4.89E-07
Benzo(k)fluoranthene	1.55E-07
1,3-Butadiene	3.91E-05
Chrysene	3.53E-07
Dibenz(a,h)anthracene	5.83E-07
Fluoranthene	7.61E-06
Fluorene	2.92E-05
Formaldehyde	1.18E-03
Indeno(1,2,3-cd)pyrene	3.75E-07
Naphthalene	8.48E-05
Phenanthrene	2.94E-05
Pyrene	4.78E-06
Toluene	4.09E-04
Xylenes	2.85E-04

Boiler Emission Factors

AP42 Table 1.3-9, Emission Factors For Speciated Organic Compounds From Fuel Oil Combustion

Pollutant	EF lb/10^3 gal	EF lb/MMBtu
Acenaphthene	2.11E-05	1.59E-07
Acenaphthylene	2.53E-07	1.90E-09
Anthracene	1.22E-06	9.17E-09
Benzene	2.14E-04	1.61E-06
Benz(a)anthracene	4.01E-06	3.01E-08
Benzo(b,k)fluoranthene	1.48E-06	1.11E-08
Benzo(g,h,i)perylene	2.26E-06	1.70E-08
Chrysene	2.38E-06	1.79E-08
Dibenzo(a,h)anthracene	1.67E-06	1.25E-08
Ethylbenzene	6.36E-05	4.78E-07
Fluoranthene	4.84E-06	3.64E-08
Fluorene	4.47E-06	3.36E-08
Formaldehyde	3.30E-02	2.48E-04
Indo(1,2,3-cd)pyrene	2.14E-06	1.61E-08
Naphthalene	1.13E-03	8.49E-06
Phenanthrene	1.05E-05	7.89E-08
Pyrene	4.25E-06	3.19E-08
Toluene	6.20E-03	4.66E-05
o-Xylene	1.09E-04	8.19E-07

Incinerator Emission Factors

Metal			lb/MMBtu
Arsenic	As		4.90E-06
Cadmium	Cd	11 lb/10^{12} Btu	1.10E-05
Chromium	Cr	0.35 lb/10^6 gal	2.63E-06
Lead	Pb		2.9E-05
Mercury	Hg	6.2 lb/10^{12} Btu	6.20E-06
Nickel	Ni	0.41 lb/10^6 gal	3.08E-06
Total HAPs			3.93E-03

Table 1.3-10. Emission Factors For Trace Elements From Distillate Fuel Oil Combustion Sources

Metal		EF lb/10^{12} Btu	EF lb/MMBtu
Arsenic	As	4	4.00E-06
Cadmium	Cd	3	3.00E-06
Chromium	Cr	3	3.00E-06
Lead	Pb	9	9.00E-06
Mercury	Hg	3	3.00E-06
Nickel	Ni	3	3.00E-06
Total HAPs			3.31E-04

Table 2.2-2 - Metals Emission Factors for Mass Burn and Modular Excess Air Combustors

Metal		lb/ton	lb/lb
Arsenic	As	4.37E-03	2.19E-06
Cadmium	Cd	1.09E-02	5.45E-06
Chromium	Cr	8.97E-03	4.49E-06
Lead	Pb	2.13E-01	1.07E-04
Mercury	Hg	5.60E-03	2.80E-06
Nickel	Ni	7.85E-03	3.93E-06
Total HAPs		2.51E-01	1.25E-04

ICE Metal References

Arsenic	L & E Air Emissions from Sources of Arsenic and Arsenic Compounds, EPA-454/R-98-013, June 1998, Table 4-20, Distillate Oil Fired Turbine
Cadmium	L & E Air Emissions from Sources of Cadmium and Cadmium Compounds, EPA-454/R-93-040, Sept. 1993, Table 6-12, No. 2 Distillate Oil
Chromium	L & E Air Emissions from Sources of Chromium, EPA-450/4-84-007g, July 1984, Table 36, Distillate #2
Lead	L & E Air Emissions from Sources of Lead and Lead Compounds, EPA 454/R-98-006, May 1998, Section 5.2.2, Distillate oil-fired gas turbines
Mercury	L & E Air Emissions from Sources of Mercury and Mercury Compounds, EPA-454/R-97-012, Dec. 1997, Table 6-12, Distillate No. 2
Nickel	L & E Air Emissions from Sources of Nickel, EPA-450/4-84-007f, March 1984, Table 26, Distillate #2

Air Sciences Inc.	PROJECT TITLE: Shell Offshore, Inc.	BY: S. Pryor	
	PROJECT NO: 180-15-1	PAGE: 1	OF: 3
ENGINEERING CALCULATIONS	SUBJECT: Fleet	DATE: September 17, 2009	

Generic Ice Breaker

Propulsion Engines	80%
Remaining Sources	100%

Unit ID	Description	Make/Model	Rating	Capacity	Fuel consumpt. (MMBtu/hr)	Fuel Use (gal/hr)
	Propulsion		28,400 hp	80%	159.040	1,194.9
	Generator		2800 hp	100%	19.600	147.3
	Heat Boiler		10 MMBtu/hr	100%	10.000	75.1
	Incinerator		154 lb/hr	100%		
					188.640	1417.3

Jim Kilabuk (Resupply Ship - docked)

Unit ID	Description	Make/Model	Rating	Capacity	Hourly Fuel consumpt. (MMBtu/hr)	Daily & Annual Capacity	Daily & Annual Fuel consumpt. (MMBtu/hr)
JK-1	Main Propulsion	EMD / V20 645	3,600 hp	0%	0.000	0%	0.000
JK-2	Main Propulsion	EMD / V20 645	3,600 hp	0%	0.000	0%	0.000
JK-3	Generator	Cat / D3406	292 hp	100%	2.044	100%	2.044
JK-4	Generator	Cat / D3406	292 hp	100%	2.044	0%	0.000
JK-5	HPU Engine	Cat / D343	300 hp	0%	0.000	0%	0.000
JK-6	Bow Thruster	Cat / D343	300 hp	0%	0.000	0%	0.000
	Jim Kilabuk total				4.088		2.044
Resupply Ship - docked					4.088		2.044

Jim Kilabuk (Resupply Ship-in Transit)

JK-1	Main Propulsion	EMD / V20 645	3,600 hp	80%	20.160
JK-2	Main Propulsion	EMD / V20 645	3,600 hp	80%	20.160
JK-3	Generator	Cat / D3406	292 hp	100%	2.044
JK-4	Generator	Cat / D3406	292 hp	100%	2.044
JK-5	HPU Engine	Cat / D343	300 hp	0%	0.000
JK-6	Bow Thruster	Cat / D343	300 hp	0%	0.000
	Jim Kilabuk total				44.408
Resupply Ship - in Transit					44.408

Air Sciences Inc.	PROJECT TITLE: Shell Offshore, Inc.	BY: S. Pryor
ENGINEERING CALCULATIONS	PROJECT NO: 180-15-1	PAGE: 2 OF: 3
	SUBJECT: Fleet	DATE: September 17, 2009

Anchor Handlers Propulsion Engines 80% Remaining Sources 100%

Tor Viking II — Maximum Emissions (lb/hr)

Unit ID	Description	Make/Model	Rating		Capacity	Fuel consumpt. (MMBtu/hr)	Fuel Use (gal/hr)	PM_{10}	$PM_{2.5}$	NO_x	SO_2	CO	VOC
TV-1	Main Prop	MaK 8M32	5,046	hp	80%	28.26	212.3	1.62	1.62	23.57	6.20	22.20	2.54
TV-2	Main Prop	MaK 8M32	5,046	hp	80%	28.26	212.3	1.62	1.62	23.57	6.20	22.20	2.54
TV-3	Main Prop	MaK 6M32	3,784	hp	80%	21.19	159.2	1.21	1.21	17.67	4.65	16.65	1.91
TV-4	Main Prop	MaK 6M32	3,784	hp	80%	21.19	159.2	1.21	1.21	17.67	4.65	16.65	1.91
TV-5	Harbor Generator	Caterpillar 3412	1,168	hp	100%	8.18	61.4	0.47	0.47	4.36	1.80	6.42	0.74
TV-6	Harbor Generator	Caterpillar 3412	1,168	hp	100%	8.18	61.4	0.47	0.47	4.36	1.80	6.42	0.74
TV-7	Heat Boiler		1.37	MMBtu/hr	100%	1.37	10.3	0.03	0.03	0.21	0.31	0.05	0.00
	Incinerator	TeamTec/OGS200CSW	151	lb/hr [1]				1.01	0.69	0.38	0.19	22.68	7.56
	TV total					116.62	876.2	7.64	7.33	91.78	25.80	113.29	17.94

168 days/yr 4032 hr/yr ICE Engines- NOx Only 38% 1532.16 hr/yr

Tor Viking II — Maximum Emissions (ton/yr)

Unit ID	Description	Make/Model	Rating		Capacity	Fuel consumpt. (MMBtu/yr)	Fuel Use (gal/yr)	PM_{10}	$PM_{2.5}$	NO_x	SO_2	CO	VOC
TV-1	Main Prop	MaK 8M32	5,046	hp	80%	113,935	856,021	3.26	3.26	18.05	12.51	44.76	5.13
TV-2	Main Prop	MaK 8M32	5,046	hp	80%	113,935	856,021	3.26	3.26	18.05	12.51	44.76	5.13
TV-3	Main Prop	MaK 6M32	3,784	hp	80%	85,440	641,931	2.45	2.45	13.54	9.38	33.57	3.84
TV-4	Main Prop	MaK 6M32	3,784	hp	80%	85,440	641,931	2.45	2.45	13.54	9.38	33.57	3.84
TV-5	Harbor Generator	Caterpillar 3412	1,168	hp	100%	32,966	247,679	0.94	0.94	3.34	3.62	12.95	1.48
TV-6	Harbor Generator	Caterpillar 3412	1,168	hp	100%	32,966	247,679	0.94	0.94	3.34	3.62	12.95	1.48
TV-7	Heat Boiler		1.37	MMBtu/hr	100%	5,524	41,502	0.07	0.07	0.42	0.62	0.10	0.00
	Incinerator	TeamTec/OGS200CSW	151	lb/hr [1]				2.03	1.39	0.76	0.38	45.73	15.24
	TV total					470,204	3,532,764	15.41	14.77	71.04	52.02	228.39	36.16

Hull 247 — Maximum Emissions (lb/hr)

Hull 247		Rating		Capacity	Fuel consumpt. (MMBtu/hr)	Fuel Use (gal/hr)	PM_{10}	$PM_{2.5}$	NO_x	SO_2	CO	VOC
Maximum power generation		24	MWe	80%	180.16	1,353.6	10.59	10.59	76.22	39.56	148.20	17.02
Heat Boiler		4	MMBtu/hr	100%	4.00	30.1	0.10	0.10	0.72	0.90	0.15	0.01
Incinerator	TeamTec/OGS200CSW	151	lb/hr [1]				1.01	0.69	0.38	0.19	22.68	7.56
Hull total					184.16	1,383.6	11.69	11.37	77.32	40.65	171.04	24.59

168 days/yr 4032 hr/yr ICE Engines- NOx Only 38% 1532.16 hr/yr

Hull 247 — Maximum Emissions (ton/yr)

Hull 247		Rating		Capacity	Fuel consumpt. (MMBtu/yr)	Fuel Use (gal/yr)	PM_{10}	$PM_{2.5}$	NO_x	SO_2	CO	VOC
Maximum power generation		24	MWe	80%	726,409	5,457,699	21.34	21.34	58.39	79.75	298.78	34.32
Heat Boiler		4	MMBtu/hr	100%	16,128.00	121,173.9	0.20	0.20	1.45	1.81	0.30	0.01
Incinerator	TeamTec/OGS200CSW	151	lb/hr				2.03	1.39	0.76	0.38	45.73	15.24
Hull total					742,537	5,578,873	23.57	22.93	60.61	81.94	344.82	49.57
Maximum (lb/hr) from Anchor Handler					184.16	1,383.65	11.69	11.37	91.78	40.65	171.04	24.59

[1] Ratioed from Discoverer incinerator

TeamTec/GS500C	850	kW	TeamTec/OGS200CSW	465	kW
	730000	kcal/hr		400000	kcal/hr
	276	lb/hr		151.23	lb/hr

Assumptions			Reference
Diesel heat value	133,098 Btu/gal	0.133098 MMBtu/gal	Keiser, Ronald email to Chris Tengco, 01/26/09.
ICE engines	7,000 Btu/hp-hr	0.0070 MMBtu/hp-hr	AP42 Table 3.3-1, 10/96

Conversions			
1,340.483	hp/MW	454	g/lb
1.340	hp/kW	2000	lb/ton

PM Factors		EF		EF		Reference
PM_{10}						
Engines >600 hp				0.0573	lb/MMBtu	AP42 Table 3.4-2, 10/96
Engines >750 hp		0.25	g/kW-hr	0.059	lb/MMBtu	Tier 4 emission limit
Boilers < 100 MMBtu/hr, Distillate Oil	Filterable PM	2	lb/10^3 gal	0.015	lb/MMBtu	AP42 Table 1.3-1, 9/98
	Condensable PM	1.3	lb/10^3 gal	0.010	lb/MMBtu	AP42 Table 1.3-2, 9/98
	Total PM	3.3	lb/10^3 gal	0.025	lb/MMBtu	
Incinerator		13.3	lb/ton	0.007	lb/lb	AP42 Table 2.1-12, 10/96 & Appendix B.1 2.1
$PM_{2.5}$						
All emissions units		100%	PM_{10}			
Incinerator		9.1	lb/ton	0.0046	lb/lb	AP42 Table 2.1-12, 10/96 & Appendix B.1 2.1

NOx Factors		EF		EF		Reference
TV prop generators		0.111	lb NO_X / gal	0.834	lb/MMBtu	Permit R100CS-AK-07-01, controlled
TV harbor generator		0.071	lb NO_X / gal	0.533	lb/MMBtu	Permit R100CS-AK-07-01, controlled
TV boiler		0.02	lb NO_X / gal	0.150	lb/MMBtu	Permit R100CS-AK-07-01
Hull 247	SCR	1.8	g/kW-hr	0.423	lb/MMBtu	SCR Control
Boilers < 100 MMBtu/hr, Distillate Oil		24	lb/10^3 gal	0.180	lb/MMBtu	AP42 Table 1.3-1, 9/98
Incinerator		5	lb/ton	0.0025	lb/lb	AP42 Table 2.2-1, multiple hearth

SO_2 Factor			EF		EF	Reference
Engines >600 hp	0.19%	by wt.	8.09E-03 S	lb/hp-hr	0.220	lb/MMBtu	AP42 Table 3.4-1, 10/96
Boilers < 100 MMBtu/hr, Distillate Oil	0.19%	by wt.	157 S	lb/10^3 gal	0.224	lb/MMBtu	AP42 Table 1.3-1, 9/98
Incinerator			2.5	lb/ton	0.0013	lb/lb	AP42 Table 2.1-12, 10/96

CO Factor	EF		EF		Reference
Engines >600 hp	5.50E-03	lb/hp-hr	0.786	lb/MMBtu	AP42 Table 3.4-1, 10/96
Engines >750 hp	3.5	g/kW-hr	0.823	lb/MMBtu	Tier 2 emission limit
Boilers < 100 MMBtu/hr, Distillate Oil	5	lb/10^3 gal	0.038	lb/MMBtu	AP42 Table 1.3-1, 9/98
Incinerator	300	lb/ton	0.1500	lb/lb	AP42 Table 2.1-12, 10/96

VOC Factor	EF		EF		Reference
Engines >600 hp			0.09	lb/MMBtu	AP42 Table 3.4-1, 10/96
Engines >750 hp	0.3	g/hp-hr	0.094	lb/MMBtu	Tier 4 emission limit
Industrial boilers, Distillate oil fired	0.2	lb/10^3 gal	0.002	lb/MMBtu	AP42 Table 1.3-3, 9/98
Incinerator	100	lb/ton	0.0500	lb/lb	AP42 Table 2.1-12, 10/96

Air Sciences Inc.	PROJECT TITLE: Shell Offshore, Inc.	BY: S. Pryor	
	PROJECT NO: 180-15-1	PAGE: 3	OF: 3
ENGINEERING CALCULATIONS	SUBJECT: Fleet	DATE: September 17, 2009	

Oil Spill Response Fleet

Nanuq (Main Oil Spill Response Vessel)		**34-foot Oil Spill Response Work Boats**	
Propulsion Engines	100%	Propulsion	100%
Electrical Generators	100%	Generator	100%
Remaining Prop & Generators	0%		
Incinerator	100%		

Unit ID	Description	Make/Model	Rating	Capacity	Fuel consumpt. (MMBtu/hr)	Fuel Use (gal/hr)
Nanuq (Main Oil Spill Response Vessel)						
N-1	Propulsion Engine	Cat/3608	2,710 kW	100%	23.004	172.8
N-2	Propulsion Engine	Cat/3608	2,710 kW	100%	23.004	172.8
N-3	Electrical Generator	Cat/3508	1,285 hp	100%	8.995	67.6
N-4	Electrical Generator	Cat/3508	1,285 hp	100%	8.995	67.6
N-5	Emergency Gen	John Deere	166 kW	0%	0.000	0.0
N-6	Incinerator	ASC / CP100	125 lb/hr	100%		
	Nanuq total				63.998	480.832
	Main Ship Propulsion Engines		5,420 kW	100%	46.008	345.668
	Main Ship Generators		2,570 hp	100%	17.990	135.164
					63.998	480.832
Kvichak No. 1 34-foot Oil Spill Response Work Boat						
OSRK1-1	Propulsion		300 hp	100%	2.100	
OSRK1-2	Propulsion		300 hp	100%	2.100	
OSRK1-3	Generator		12 hp	100%	0.084	
Kvichak No. 2 34-foot Oil Spill Response Work Boat						
OSRK2-1	Propulsion		300 hp	100%	2.100	
OSRK2-2	Propulsion		300 hp	100%	2.100	
OSRK2-3	Generator		12 hp	100%	0.084	
Kvichak No. 3 34-foot Oil Spill Response Work Boat						
OSRK3-1	Propulsion		300 hp	100%	2.100	
OSRK3-2	Propulsion		300 hp	100%	2.100	
OSRK3-3	Generator		12 hp	100%	0.084	
	3 34-foot OSR Work Boats total				12.852	
OSR fleet total					76.850	
	Work Boat Propulsion Engines		1800 hp		12.600	
	Work Boat Generators		36 hp		0.252	
					12.852	

Air Sciences Inc.	PROJECT TITLE: Shell Offshore, Inc.	BY: S. Pryor	
	PROJECT NO: 180-15-1	PAGE: 2	OF: 18
ENGINEERING CALCULATIONS	SUBJECT: Discoverer Emissions-AK OCS	DATE: September 17, 2009	

Emissions Unit: FD-8 Em Generator **Make/Model:** Caterpillar / 3304 **Rating:** 131 hp

Emissions Factors, lb/MMBtu

PM_{10}	$PM_{2.5}$	NO_x	SO_2	CO	VOC	Lead
0.696	0.696	3.553	0.0016	1.953	0.366	2.9E-05

Control Efficiency

PM_{10}	$PM_{2.5}$	NO_x	SO_2 [1]	CO	VOC	Lead
0%	0%	0%	0%	0%	0%	0%

Rated fuel consumpt. MMBtu/hr	Max Actual fuel consumpt. MMBtu/hr	Hourly Emission Rate, lb/hr PM_{10}	$PM_{2.5}$	NO_x	SO_2	CO	VOC	Lead
0.9	0.9	0.64	0.64	3.26	1.46E-03	1.79	0.34	2.66E-05

ORR days/yr	Use min/wk	Max Actual fuel consumpt. MMBtu/yr	Annual Emission Rate, ton/yr PM_{10}	$PM_{2.5}$	NO_x	SO_2	CO	VOC	Lead
168	120	44	1.53E-02	1.53E-02	7.82E-02	3.51E-05	4.30E-02	8.06E-03	6.38E-07

Operational Restrictions

Unit FD-8 (Emergency Generator) operation assumed for

[1] Sulfur content on all stationary source engines on Discovere 0.0015% by wt.

Emissions Factor References

PM_{10}	Max of 13 test from EPA/600/8-90/057F
$PM_{2.5}$	100% PM_{10}
NO_x	Max of 13 test from EPA/600/8-90/057F
SO_2	Sulfur Content Calculation
CO	Max of 13 test from EPA/600/8-90/057F
VOC	Max of 13 test from EPA/600/8-90/057F
Lead	L & E Air Emissions from Sources of Lead and Lead Compounds, EPA 454/R-98-006, May 1998, Section 5.2.2, Distillate oil-fired gas turbines

Assumptions	References	Conversions
Diesel heat value	Keiser, Ronald email to Chris Tengco, 01/26/09.	1.340 hp/kW
133,098 Btu/gal		454 g/lb
0.1331 MMBtu/gal		3,600 sec/hour
Diesel density	SCANRAFF-Vladimir Ignatjuk Certificate of Quality. 09/19/04.	2,000 lb/ton
847.9 kg/m^3		2 wt. conversion of S to SO2
7.08 lb/gal		264 gal/m^3
ICE Engines diesel heat rate	AP42 Table 3.3-1, 10/96	
7,000 Btu/hp-hr		
0.007 MMBtu/hp-hr		

Air Sciences Inc.	PROJECT TITLE: Shell Offshore, Inc.	BY: S. Pryor	
	PROJECT NO: 180-15-1	PAGE: 6	OF: 18
ENGINEERING CALCULATIONS	SUBJECT: Discoverer Emissions-AK OCS	DATE: September 17, 2009	

Emissions Unit: FD-16-17 Cementing Unit **Make/Model:** Detroit / 8V-71N **Rating:** 335 hp

Emissions Factors, lb/MMBtu

PM_{10}	$PM_{2.5}$	NO_x	SO_2	CO	VOC	Lead
0.542	0.542	3.310	0.0016	1.850	0.568	2.9E-05

Control Efficiency

PM_{10}	$PM_{2.5}$	NO_x	SO_2 [1]	CO	VOC	Lead
85%	85%	0%	0%	90%	90%	0%

Rated fuel consumpt. MMBtu/hr	Hourly Emission Rate, lb/hr PM_{10}	$PM_{2.5}$	NO_x	SO_2	CO	VOC	Lead
2.6	0.21	0.21	8.66	4.17E-03	0.48	0.15	7.58E-05

Capacity ORR	ORR days/yr	Max Actual fuel consumpt. MMBtu/yr	Annual Emission Rate, ton/yr PM_{10}	$PM_{2.5}$	NO_x	SO_2	CO	VOC	Lead
28%	168	2,931	0.12	0.12	4.85	2.34E-03	0.27	0.08	4.25E-05

Operational Restrictions

Cementing (three units) & Logging (two units) combined maximum 28% per day (of Cementing)

[1] Sulfur content on all stationary source engines on Discoverer & N 0.0015% by wt.

Control Device Effectiveness		References
Discoverer small engines (other than Tier 3 engines) and Nanuq propulsion and generation Catalytic Diesel Particulate Filter (CDPF) CO, VOC, HAPs, reduction efficiency	90%	CleanAIR CDPF guarantee
Discoverer small engines (other than Tier 3 engines) and Nanuq propulsion and genera	85%	California Air Resource Board Currently verified, January 2009, CleanAIR Systems PERMIT
CCV on Crankcase vent	100%	Crankcase emissions redirected to intake

Emissions Factor References

PM_{10}	Max of 8 test from EPA/600/8-90/057F
$PM_{2.5}$	100% PM_{10}
NO_x	Max of 8 test from EPA/600/8-90/057F
SO_2	Sulfur Content Calculation
CO	Max of 6 test from EPA/600/8-90/057F
VOC	Max of 6 test from EPA/600/8-90/057F
Lead	L & E Air Emissions from Sources of Lead and Lead Compounds, EPA 454/R-98-006, May 1998, Section 5.2.2, Distillate oil-fired gas turbines

BACT Emission Limits and Test Methods

PM_{10}	Control Method:	CDPF	Control Efficiency:	85%		
	Uncontrolled emission rate:	1.92 g/bhp-hr	2.573 g/kW-hr		Ref:	Max of 8 test from EPA/600/8-90/057F
	Proposed BACT emission rate:	0.288 g/bhp-hr	0.386 g/kW-hr			
	Proposed emission test methods:	EPA methods 1-4 & 5, at engine load >50%			Interval:	triplicate consecutive 1-hour tests.
NO_x	Control Method:	GCP & integral design	Control Efficiency:	N/A		
	Uncontrolled & Controlled emission rate:	11.72 g/bhp-hr	15.705 g/kW-hr		Ref:	Max of 8 test from EPA/600/8-90/057F
	Proposed emission test methods:	EPA methods 1-4 & 7E, at engine load >50%			Interval:	triplicate consecutive 1-hour tests.
CO	Control Method:	CDPF	Control Efficiency:	90%		
	Uncontrolled emission rate:	6.55 g/bhp-hr	8.777 g/kW-hr		Ref:	Max of 6 test from EPA/600/8-90/057F
	Proposed BACT emission rate:	0.655 g/bhp-hr	0.878 g/kW-hr			
	Proposed emission test methods:	EPA methods 1-4 & 10, at engine load >50%			Interval:	triplicate consecutive 1-hour tests.

Assumptions	References	Conversions
Diesel heat value	Keiser, Ronald email to Chris Tengco, 01/26/09.	1.340 hp/kW
133,098 Btu/gal		454 g/lb
0.1331 MMBtu/gal		3,600 sec/hour
Diesel density	SCANRAFF-Vladimir Ignatjuk Certificate of Quality. 09/19/04.	2,000 lb/ton
847.9 kg/m^3		2 wt. conversion of S to SO2
7.08 lb/gal		264 gal/m^3
Detroit 8V-71N engines diesel heat rate	Detroit Diesel, Engine Performance Model: 8V-71N, 10/15/81	
0.415 lb/hp-hr		
0.0078 MMBtu/hp-hr		

Air Sciences Inc.	PROJECT TITLE: Shell Offshore, Inc.	BY: S. Pryor	
	PROJECT NO: 180-15-1	PAGE: 7	OF: 18
ENGINEERING CALCULATIONS	SUBJECT: Discoverer Emissions-AK OCS	DATE: September 17, 2009	

Emissions Unit: FD-18 Cementing Unit **Make/Model:** GM 3-71 **Rating:** 147 hp

Emissions Factors, lb/MMBtu

PM_{10}	$PM_{2.5}$	NO_x	SO_2	CO	VOC	Lead
0.542	0.542	3.310	0.0016	1.850	0.568	2.9E-05

Control Efficiency

PM_{10}	$PM_{2.5}$	NO_x	SO_2 [1]	CO	VOC	Lead
85%	85%	0%	0%	90%	90%	0%

Rated fuel consumpt. MMBtu/hr	Hourly Emission Rate, lb/hr PM_{10}	$PM_{2.5}$	NO_x	SO_2	CO	VOC	Lead
1.1	0.09	0.09	3.80	1.83E-03	0.21	0.07	3.33E-05

Capacity ORR	ORR days/yr	Max Actual fuel consumpt. MMBtu/yr	Annual Emission Rate, ton/yr PM_{10}	$PM_{2.5}$	NO_x	SO_2	CO	VOC	Lead
28%	168	1,286	0.05	0.05	2.13	1.03E-03	0.12	0.04	1.86E-05

Operational Restrictions

Cementing (three units) & Logging (two units) combined maximum 28% per day (of Cementing)

[1] Sulfur content on all stationary source engines on Discoverer & N 0.0015% by wt.

Control Device Effectiveness		References
Discoverer small engines (other than Tier 3 engines) and Nanuq propulsion and generation Catalytic Diesel Particulate Filter (CDPF) CO, VOC, HAPs, reduction efficiency	90%	CleanAIR CDPF guarantee
Discoverer small engines (other than Tier 3 engines) and Nanuq propulsion and genera	85%	California Air Resource Board Currently verified, January 2009, CleanAIR Systems PERMIT
CCV on Crankcase vent	100%	Crankcase emissions redirected to intake

Emissions Factor References

PM_{10}	Max of 8 test from EPA/600/8-90/057F
$PM_{2.5}$	100% PM_{10}
NO_x	Max of 8 test from EPA/600/8-90/057F
SO_2	Sulfur Content Calculation
CO	Max of 6 test from EPA/600/8-90/057F
VOC	Max of 6 test from EPA/600/8-90/057F
Lead	L & E Air Emissions from Sources of Lead and Lead Compounds, EPA 454/R-98-006, May 1998, Section 5.2.2, Distillate oil-fired gas turbines

BACT Emission Limits and Test Methods

PM_{10}	Control Method:	CDPF	Control Efficiency:	85%		
	Uncontrolled emission rate:	1.92 g/bhp-hr	2.573 g/kW-hr		Ref:	Max of 8 test from EPA/600/8-90/057F
	Proposed BACT emission rate:	0.288 g/bhp-hr	0.386 g/kW-hr			
	Proposed emission test methods:	EPA methods 1-4 & 5, at engine load >50%			Interval:	triplicate consecutive 1-hour tests.
NO_x	Control Method:	GCP & integral design	Control Efficiency:	N/A		
	Uncontrolled & Controlled emission rate:	11.72 g/bhp-hr	15.705 g/kW-hr		Ref:	Max of 8 test from EPA/600/8-90/057F
	Proposed emission test methods:	EPA methods 1-4 & 7E, at engine load >50%			Interval:	triplicate consecutive 1-hour tests.
CO	Control Method:	CDPF	Control Efficiency:	90%		
	Uncontrolled emission rate:	6.55 g/bhp-hr	8.777 g/kW-hr		Ref:	Max of 6 test from EPA/600/8-90/057F
	Proposed BACT emission rate:	0.655 g/bhp-hr	0.878 g/kW-hr			
	Proposed emission test methods:	EPA methods 1-4 & 10, at engine load >50%			Interval:	triplicate consecutive 1-hour tests.

Assumptions	References	Conversions
Diesel heat value	Keiser, Ronald email to Chris Tengco, 01/26/09.	1.340 hp/kW
133,098 Btu/gal		454 g/lb
0.1331 MMBtu/gal		3,600 sec/hour
Diesel density	SCANRAFF-Vladimir Ignatjuk Certificate of Quality. 09/19/04.	2,000 lb/ton
847.9 kg/m^3		2 wt. conversion of S to SO2
7.08 lb/gal		264 gal/m^3
Detroit 8V-71N engines diesel heat rate	Detroit Diesel, Engine Performance Model: 8V-71N, 10/15/81	
0.415 lb/hp-hr		
0.0078 MMBtu/hp-hr		

Air Sciences Inc.	PROJECT TITLE: Shell Offshore, Inc.	BY: S. Pryor	
	PROJECT NO: 180-15-1	PAGE: 8	OF: 18
ENGINEERING CALCULATIONS	SUBJECT: Discoverer Emissions-AK OCS	DATE: September 17, 2009	

Emissions Unit: FD-19 Logging Winch **Make/Model:** Detroit / 4-71N **Rating:** 128 hp

Emissions Factors, lb/MMBtu

PM_{10}	$PM_{2.5}$	NO_x	SO_2	CO	VOC	Lead
0.542	0.542	3.310	0.0016	1.850	0.568	2.9E-05

Control Efficiency

PM_{10}	$PM_{2.5}$	NO_x	SO_2 [1]	CO	VOC	Lead
85%	85%	0%	0%	90%	90%	0%

Rated fuel consumpt. MMBtu/hr	Hourly Emission Rate, lb/hr PM_{10}	$PM_{2.5}$	NO_x	SO_2	CO	VOC	Lead
1.0	0.08	0.08	3.31	1.59E-03	0.18	0.06	2.90E-05

Capacity ORR	ORR days/yr	Max Actual fuel consumpt. MMBtu/yr	Annual Emission Rate, ton/yr PM_{10}	$PM_{2.5}$	NO_x	SO_2	CO	VOC	Lead
28%	168	1,120	0.05	0.05	1.85	8.93E-04	0.10	0.03	1.62E-05

Operational Restrictions

Cementing (three units) & Logging (two units) combined maximum 28%

Logging Units only operate when the cementing units are not operating

[1] Sulfur content on all stationary source engines on Discoverer & N 0.0015% by wt.

Control Device Effectiveness		References
Discoverer small engines (other than Tier 3 engines) and Nanuq propulsion and generation Catalytic Diesel Particulate Filter (CDPF) CO, VOC, HAPs, reduction efficiency	90%	CleanAIR CDPF guarantee
Discoverer small engines (other than Tier 3 engines) and Nanuq propulsion and genera	85%	California Air Resource Board Currently verified, January 2009, CleanAIR Systems PERMIT
CCV on Crankcase vent	100%	Crankcase emissions redirected to intake

Emissions Factor References

PM_{10}	Max of 8 test from EPA/600/8-90/057F
$PM_{2.5}$	100% PM_{10}
NO_x	Max of 8 test from EPA/600/8-90/057F
SO_2	Sulfur Content Calculation
CO	Max of 6 test from EPA/600/8-90/057F
VOC	Max of 6 test from EPA/600/8-90/057F
Lead	L & E Air Emissions from Sources of Lead and Lead Compounds, EPA 454/R-98-006, May 1998, Section 5.2.2, Distillate oil-fired gas turbines

BACT Emission Limits and Test Methods

PM_{10}	Control Method:	CDPF	Control Efficiency:	85%		
	Uncontrolled emission rate:	1.92 g/bhp-hr	2.573 g/kW-hr		Ref:	Max of 8 test from EPA/600/8-90/057F
	Proposed BACT emission rate:	0.288 g/bhp-hr	0.386 g/kW-hr			
	Proposed emission test methods:	EPA methods 1-4 & 5, at engine load >50%			Interval:	triplicate consecutive 1-hour tests.
NO_x	Control Method:	GCP & integral design	Control Efficiency:	N/A		
	Uncontrolled & Controlled emission rate:	11.72 g/bhp-hr	15.705 g/kW-hr		Ref:	Max of 8 test from EPA/600/8-90/057F
	Proposed emission test methods:	EPA methods 1-4 & 7E, at engine load >50%			Interval:	triplicate consecutive 1-hour tests.
CO	Control Method:	CDPF	Control Efficiency:	90%		
	Uncontrolled emission rate:	6.55 g/bhp-hr	8.777 g/kW-hr		Ref:	Max of 6 test from EPA/600/8-90/057F
	Proposed BACT emission rate:	0.655 g/bhp-hr	0.878 g/kW-hr			
	Proposed emission test methods:	EPA methods 1-4 & 10, at engine load >50%			Interval:	triplicate consecutive 1-hour tests.

Assumptions	References	Conversions
Diesel heat value	Keiser, Ronald email to Chris Tengco, 01/26/09.	1.340 hp/kW
133,098 Btu/gal		454 g/lb
0.1331 MMBtu/gal		3,600 sec/hour
Diesel density	SCANRAFF-Vladimir Ignatjuk Certificate of Quality. 09/19/04.	2,000 lb/ton
847.9 kg/m^3		2 wt. conversion of S to SO2
7.08 lb/gal		264 gal/m^3
Detroit 8V-71N engines diesel heat rate	Detroit Diesel, Engine Performance Model: 8V-71N, 10/15/81	
0.415 lb/hp-hr		
0.0078 MMBtu/hp-hr		

Emissions Unit: FD-20 Logging Winch **Make/Model:** John Deere/4024TF270 **Rating:** 36 kW

Emissions Factors, lb/MMBtu

PM_{10}	$PM_{2.5}$	NO_x	SO_2	CO	VOC	Lead
0.141	0.141	1.768	0.0016	1.296	1.768	2.9E-05

Control Efficiency

PM_{10}	$PM_{2.5}$	NO_x	SO_2 [1]	CO	VOC	Lead
85%	85%	0%	0%	90%	90%	0%

Rated fuel consumpt. MMBtu/hr	Hourly Emission Rate, lb/hr PM_{10}	$PM_{2.5}$	NO_x	SO_2	CO	VOC	Lead
0.3	7.14E-03	7.14E-03	5.95E-01	5.37E-04	4.37E-02	5.95E-02	9.76E-06

Capacity ORR	ORR days/yr	Max Actual fuel consumpt. MMBtu/yr	Annual Emission Rate, ton/yr PM_{10}	$PM_{2.5}$	NO_x	SO_2	CO	VOC	Lead
28%	168	377	4.00E-03	4.00E-03	3.34E-01	3.01E-04	2.45E-02	3.34E-02	5.47E-06

Operational Restrictions

Cementing (three units) & Logging (two units) combined maximum 28%

Logging Units only operate when the cementing units are not operating

[1] Sulfur content on all stationary source engines on Discoverer & Na 0.0015% by wt.

Control Device Effectiveness		References
Discoverer small engines (other than Tier 3 engines) and Nanuq propulsion and generation Catalytic Diesel Particulate Filter (CDPF) CO, VOC, HAPs, reduction efficiency	90%	CleanAIR CDPF guarantee
Discoverer small engines (other than Tier 3 engines) and Nanuq propulsion and generati	85%	California Air Resource Board Currently verified, January 2009, CleanAIR Systems PERMIT

Emissions Factor References

PM_{10}	Tier 2 emission limit
$PM_{2.5}$	100% PM_{10}
NO_x	Tier 2 emission limit
SO_2	Sulfur Content Calculation
CO	Tier 2 emission limit
VOC	Tier 2 emission limit
Lead	L & E Air Emissions from Sources of Lead and Lead Compounds, EPA 454/R-98-006, May 1998, Section 5.2.2, Distillate oil-fired gas turbines

BACT Emission Limits and Test Methods

PM_{10}	Control Method:	CDPF & Integral Design	Control Efficiency:	85%		
	Uncontrolled emission rate:	0.6	g/kW-hr		Ref:	Tier 2 emission limit
	Proposed BACT emission rate:	0.09	g/kW-hr			
	Proposed emission test methods:	EPA methods 1-4 & 5, at engine load >50%			Interval:	triplicate consecutive 1-hour tests.
NO_x	Control Method:	Integral Design	Control Efficiency:	N/A		
	Uncontrolled & Controlled emission rate:	7.5	g/kW-hr		Ref:	Tier 2 emission limit
	Proposed emission test methods:	EPA methods 1-4 & 7E, at engine load >50%			Interval:	triplicate consecutive 1-hour tests.
CO	Control Method:	CDPF & Integral Design	Control Efficiency:	90%		
	Uncontrolled emission rate:	5.5	g/kW-hr		Ref:	Tier 2 emission limit
	Proposed BACT emission rate:	0.55	g/kW-hr			
	Proposed emission test methods:	EPA methods 1-4 & 10, at engine load >50%			Interval:	triplicate consecutive 1-hour tests.

Assumptions	References	Conversions
Diesel heat value	Keiser, Ronald email to Chris Tengco, 01/26/09.	1.340 hp/kW
133,098 Btu/gal		454 g/lb
0.1331 MMBtu/gal		3,600 sec/hour
Diesel density	SCANRAFF-Vladimir Ignatjuk Certificate of Quality. 09/19/04.	2,000 lb/ton
847.9 kg/m^3		2 wt. conversion of S to SO2
7.08 lb/gal		264 gal/m^3
ICE Engines diesel heat rate	John Deere Model 4024TF270 Engine Performance, 06/04	
17.9 lb/hr		
0.007 MMBtu/hp-hr		

Emissions Unit: FD-23 Incinerator **Make/Model:** TeamTec/GS500C **Rating:** 276 lb/hr

Emissions Factors, lb/lb

PM_{10}	$PM_{2.5}$	NO_x	SO_2	CO	VOC	Lead
0.0041	0.0035	0.0025	0.0013	0.0155	0.0015	1.07E-04

Control Efficiency

PM_{10}	$PM_{2.5}$	NO_x	SO_2 [1]	CO	VOC	Lead
0%	0%	0%	0%	0%	0%	0%

Hourly Emission Rate, lb/hr

PM_{10}	$PM_{2.5}$	NO_x	SO_2	CO	VOC	Lead
1.13	0.97	0.69	0.35	4.28	0.41	0.03

300 lb/trash per day

Daily Emission Rate, lb/hr

PM_{10}	$PM_{2.5}$	NO_x	SO_2	CO	VOC	Lead
1.23	1.05	0.75	0.38	4.65	0.45	0.03

800 lb/trash per day

Daily Emission Rate, lb/hr

PM_{10}	$PM_{2.5}$	NO_x	SO_2	CO	VOC	Lead
3.28	2.80	2.00	1.00	12.40	1.20	0.09

1300 lb/trash per day

Daily Emission Rate, lb/hr

PM_{10}	$PM_{2.5}$	NO_x	SO_2	CO	VOC	Lead
5.33	4.55	3.25	1.63	20.15	1.95	0.14

300 lb/trash per day

Annual Emission Rate, ton/yr

ORR days/yr	PM_{10}	$PM_{2.5}$	NO_x	SO_2	CO	VOC	Lead
168	0.10	0.09	0.06	0.03	0.39	0.04	2.68E-03

Operational Restrictions

Discoverer Incinerator, when two HPUs are operating, limited to 300 lb/trash per day
Discoverer Incinerator, when one HPU is operating, limited to 800 lb/trash per day
Discoverer Incinerator, when no HPUs are operating, limited to 1300 lb/trash per day
[1] Sulfur content on all stationary source engines on Discov 0.0015% by wt.

Emissions Factor References

PM_{10}	ORR
$PM_{2.5}$	ORR
NO_x	AP42 Table 2.2-1, multiple hearth
SO_2	ORR
CO	AP42 Table 2.2-1, multiple hearth
VOC	AP42 Table 2.1-12, 10/96
Lead	AP42 Table 2.2-2 - Metals Emission Factors for Mass Burn and Modular Excess Air Combustors

BACT Emission Limits and Test Methods

PM_{10}	Control Method:	GCP & integral design	Control Efficiency:	N/A		
	Uncontrolled & Controlled emission rate:	8.2	lb/ton		Ref:	ORR
	Proposed emission test methods:	EPA methods 1-4 & 5, at engine load >50%			Interval:	triplicate consecutive 1-hour tests.
NO_x	Control Method:	GCP & integral design	Control Efficiency:	N/A		
	Uncontrolled & Controlled emission rate:	5	lb/ton		Ref:	AP42 Table 2.2-1, multiple hearth
	Proposed emission test methods:	EPA methods 1-4 & 7E, at engine load >50%			Interval:	triplicate consecutive 1-hour tests.
CO	Control Method:	GCP & integral design	Control Efficiency:	N/A		
	Uncontrolled & Controlled emission rate:	31	lb/ton		Ref:	AP42 Table 2.2-1, multiple hearth
	Proposed emission test methods:	EPA methods 1-4 & 10, at engine load >50%			Interval:	triplicate consecutive 1-hour tests.

Assumptions	References	Conversions
Diesel heat value	Keiser, Ronald email to Chris Tengco, 01/26/09.	1.340 hp/kW
133,098 Btu/gal		454 g/lb
0.1331 MMBtu/gal		3,600 sec/hour
Diesel density	SCANRAFF-Vladimir Ignatjuk Certificate of Quality. 09/19/04.	2,000 lb/ton
847.9 kg/m^3		2 wt. conversion of S to SO2
7.08 lb/gal		264 gal/m^3
ICE Engines diesel heat rate	AP42 Table 3.3-1, 10/96	
7,000 Btu/hp-hr		
0.007 MMBtu/hp-hr		

Air Sciences Inc.	PROJECT TITLE: Shell Offshore, Inc.	BY: S. Pryor
	PROJECT NO: 180-15-1	PAGE: 13 OF: 18
ENGINEERING CALCULATIONS	SUBJECT: Discoverer Emissions-AK OCS	DATE: September 17, 2009

Emissions Units: Ice Breaker **Rating:** ICE Engines 25,520 hp Boilers 10 MMBtu/hr

Emissions Factors

	Units	PM_{10}	$PM_{2.5}$	NO_x	SO_2	CO	VOC	Lead
ICE Engines	lb/MMBtu	0.249	0.22	5.876	0.2196	0.786	0.141	2.9E-05
Incinerators	lb/lb	0.0067	0.0046	0.0015	0.00125	0.15	0.05	1.1E-04

Control Efficiency

	PM_{10}	$PM_{2.5}$	NO_x	SO_2 [1]	CO	VOC	Lead
ICE Engines	0%	0%	0%	0%	0%	0%	0%
Incinerators	0%	0%	0%	0%	0%	0%	0%

	Rating		Rated fuel consumpt. MMBtu/hr	Hourly Emission Rate, lb/hr PM_{10}	$PM_{2.5}$	NO_x	SO_2	CO	VOC	Lead
ICE Engines			188.64	47.00	41.50	1108.42	41.42	148.22	26.60	5.47E-03
Incinerators	154	lb/hr		1.02	0.70	0.23	0.19	23.10	7.70	1.64E-02
Total			188.64	48.02	42.20	1108.65	41.62	171.32	34.30	2.19E-02

	ORR days/yr	Max Actual fuel consumpt. MMBtu/yr	Annual Emission Rate, ton/yr PM_{10}	$PM_{2.5}$	NO_x [2]	SO_2	CO	VOC	Lead
ICE Engines	168	760,596	95	84	849	84	299	54	1.10E-02
Incinerators	168		2.06	1.41	0.47	0.39	46.57	15.52	3.31E-02
Total		760,596	97	85	850	84	345	69	4.41E-02

Operational Restrictions

[1] Sulfur content on ice breaker, anchor hai 0.19% by wt.

[2] NOx ICE operation restriction based on 38% of 168 days

ICE Emissions Factor References

PM_{10}	generic factors consistent w/Ice mgmt fleet ORRs
$PM_{2.5}$	generic factors consistent w/Ice mgmt fleet ORRs
NO_x	generic factors consistent w/Ice mgmt fleet ORRs
SO_2	AP42 Table 3.4-1, 10/96
CO	AP42 Table 3.4-1, 10/96
VOC	Corbett, Koehler. Revised: 05/03
Lead	L & E Air Emissions from Sources of Lead and Lead Compounds, EPA 454/R-98-006, May 1998, Section 5.2.2, Distillate oil-fired gas turbines

Incinerator Emissions Factor References

PM_{10}	AP42 Table 2.1-12, 10/96 & Appendix B.1 2.1
$PM_{2.5}$	AP42 Table 2.1-12, 10/96 & Appendix B.1 2.1
NO_x	AP42 Table 2.1-12, 10/96
SO_2	AP42 Table 2.1-12, 10/96
CO	AP42 Table 2.1-12, 10/96
VOC	AP42 Table 2.1-12, 10/96
Lead	AP42 Table 2.2-2 - Metals Emission Factors for Mass Burn and Modular Excess Air Combustors

Assumptions	References	Conversions
Diesel heat value	Keiser, Ronald email to Chris Tengco, 01/26/09.	1.340 hp/kW
133,098 Btu/gal		454 g/lb
0.1331 MMBtu/gal		3,600 sec/hour
Diesel density	SCANRAFF-Vladimir Ignatjuk Certificate of Quality. 09/19/04.	2,000 lb/ton
847.9 kg/m^3		2 wt. conversion of S to SO2
7.08 lb/gal		264 gal/m^3
ICE Engines diesel heat rate	AP42 Table 3.3-1, 10/96	
7,000 Btu/hp-hr		
0.007 MMBtu/hp-hr		

Emissions Units: Anchor Handler Tor Viking II

Emissions Factors

	Units	PM_{10}	$PM_{2.5}$	NO_x	SO_2	CO	VOC	Lead
Propulsion Engines	lb/MMBtu	0.057	0.057	0.834	0.2196	0.786	0.090	2.9E-05
Generator Engines	lb/MMBtu	0.057	0.057	0.533	0.2196	0.786	0.090	2.9E-05
Boiler	lb/MMBtu	0.025	0.025	0.150	0.2241	0.038	0.002	9.0E-06
Incinerator	lb/lb	0.007	0.005	0.0025	0.0013	0.150	0.050	1.1E-04

Control Efficiency

	PM_{10}	$PM_{2.5}$	NO_x	SO_2 [1]	CO	VOC	Lead
All sources	0%	0%	0%	0%	0%	0%	0%

	Rating		Rated fuel consumpt. MMBtu/hr	Hourly Emission Rate, lb/hr PM_{10}	$PM_{2.5}$	NO_x	SO_2	CO	VOC	Lead
Propulsion Engines	14,128	hp	98.90	5.67	5.67	82.48	21.72	77.70	8.90	2.87E-03
Generator Engines	2,336	hp	16.35	0.94	0.94	8.72	3.59	12.85	1.47	4.74E-04
Boiler	1.37	MMBtu/hr	1.37	0.03	0.03	0.21	0.31	0.05	0.00	1.23E-05
Incinerators	151.23	lb/hr		1.01	0.69	0.38	0.19	22.68	7.56	1.61E-02
Total			116.62	7.64	7.33	91.78	25.80	113.29	17.94	1.95E-02

	ORR days/yr	Max Actual fuel consumpt. MMBtu/yr	Annual Emission Rate, ton/yr PM_{10}	$PM_{2.5}$	NO_x [2]	SO_2	CO	VOC	Lead
Propulsion Engines	168	398,749	11.42	11.42	63.18	43.78	156.65	17.94	5.78E-03
Generator Engines	168	65,931	1.89	1.89	6.68	7.24	25.90	2.97	9.56E-04
Boiler	168	5,524	0.07	0.07	0.42	0.62	0.10	0.00	2.49E-05
Incinerators	168		2.03	1.39	0.76	0.38	45.73	15.24	3.25E-02
Total		470,204	15.41	14.77	71.04	52.02	228.39	36.16	3.92E-02

Operational Restrictions

[1] Sulfur content on ice breaker, anchor hand 0.19% by wt.

[2] NOx ICE operation restriction based on 38% of 168 days

Propulsion & Generator Engine Emissions Factor References

PM_{10}	AP42 Table 3.4-2, 10/96
$PM_{2.5}$	100% PM_{10}
NO_x	Permit R100CS-AK-07-01, controlled
SO_2	AP42 Table 3.4-1, 10/96
CO	AP42 Table 3.4-1, 10/96
VOC	AP42 Table 3.4-1, 10/96
Lead	AP42 Table 3.3-2, Speciated Organic Compound Emission Factors For Uncontrolled Diesel Engines

Boiler Emissions Factor References

PM_{10}	AP42 Table 1.3-1, 9/98 & AP42 Table 1.3-2, 9/98
$PM_{2.5}$	100% PM_{10}
NO_x	Permit R100CS-AK-07-01
SO_2	AP42 Table 1.3-1, 9/98
CO	AP42 Table 1.3-1, 9/98
VOC	AP42 Table 1.3-3, 9/98
Lead	Table 1.3-10. Emission Factors For Trace Elements From Distillate Fuel Oil Combustion Sources

Incinerator Emissions Factor References

PM_{10}	AP42 Table 2.1-12, 10/96 & Appendix B.1 2.1
$PM_{2.5}$	AP42 Table 2.1-12, 10/96 & Appendix B.1 2.1
NO_x	AP42 Table 2.2-1, multiple hear
SO_2	AP42 Table 2.1-12, 10/96
CO	AP42 Table 2.1-12, 10/96
VOC	AP42 Table 2.1-12, 10/96
Lead	Table 2.2-2 - Metals Emission Factors for Mass Burn and Modular Excess Air Combustors

Assumptions	References	Conversions
Diesel heat value	Keiser, Ronald email to Chris Tengco, 01/26/09.	1.340 hp/kW
133,098 Btu/gal		454 g/lb
0.1331 MMBtu/gal		3,600 sec/hour
Diesel density	SCANRAFF-Vladimir Ignatjuk Certificate of Quality. 09/19/04.	2,000 lb/ton
847.9 kg/m^3		2 wt. conversion of S to SO2
7.08 lb/gal		264 gal/m^3
ICE Engines diesel heat rate	AP42 Table 3.3-1, 10/96	
7,000 Btu/hp-hr		
0.007 MMBtu/hp-hr		

Emissions Units: Anchor Handler Hull 247

Emissions Factors

	Units	PM_{10}	$PM_{2.5}$	NO_x	SO_2	CO	VOC	Lead
Ice Engines	lb/MMBtu	0.059	0.059	0.423	0.2196	0.823	0.094	2.9E-05
Boiler	lb/MMBtu	0.025	0.025	0.180	0.2241	0.038	0.002	9.0E-06
Incinerator	lb/lb	0.007	0.005	0.0025	0.0013	0.150	0.050	1.1E-04

Control Efficiency

	PM_{10}	$PM_{2.5}$	NO_x	SO_2 [1]	CO	VOC	Lead
All sources	0%	0%	0%	0%	0%	0%	0%

	Rating		Rated fuel consumpt. MMBtu/hr	Hourly Emission Rate, lb/hr PM_{10}	$PM_{2.5}$	NO_x	SO_2	CO	VOC	Lead
Ice Engines	24	MWe	180.16	10.59	10.59	76.22	39.56	148.20	17.02	5.22E-03
Boiler	4	MMBtu/hr	4.00	0.10	0.10	0.72	0.90	0.15	0.01	3.60E-05
Incinerators	151.23	lb/hr		1.01	0.69	0.38	0.19	22.68	7.56	1.61E-02
Total			184.16	11.69	11.37	77.32	40.65	171.04	24.59	2.14E-02

	ORR days/yr	Max Actual fuel consumpt. MMBtu/yr	Annual Emission Rate, ton/yr PM_{10}	$PM_{2.5}$	NO_x [2]	SO_2	CO	VOC	Lead
Ice Engines	168	726,409	21.34	21.34	58.39	79.75	298.78	34.32	1.05E-02
Boiler	168	16,128	0.20	0.20	1.45	1.81	0.30	0.01	7.26E-05
Incinerators	168		2.03	1.39	0.76	0.38	45.73	15.24	3.25E-02
Total		742,537	23.57	22.93	60.61	81.94	344.82	49.57	4.31E-02

Operational Restrictions

[1] Sulfur content on ice breaker, anchor hand 0.19% by wt.

[2] NOx ICE operation restriction based on 38% of 168 days

ICE Engine Emissions Factor References

PM_{10}	Tier 4 emission limit
$PM_{2.5}$	100% PM_{10}
NO_x	SCR Control
SO_2	AP42 Table 3.4-1, 10/96
CO	Tier 2 emission limit
VOC	Tier 4 emission limit
Lead	AP42 Table 3.3-2, Speciated Organic Compound Emission Factors For Uncontrolled Diesel Engines

Boiler Emissions Factor References

PM_{10}	AP42 Table 1.3-1, 9/98 & AP42 Table 1.3-2, 9/98
$PM_{2.5}$	100% PM_{10}
NO_x	AP42 Table 1.3-1, 9/98
SO_2	AP42 Table 1.3-1, 9/98
CO	AP42 Table 1.3-1, 9/98
VOC	AP42 Table 1.3-3, 9/98
Lead	Table 1.3-10. Emission Factors For Trace Elements From Distillate Fuel Oil Combustion Sources

Incinerator Emissions Factor References

PM_{10}	AP42 Table 2.1-12, 10/96 & Appendix B.1 2.1
$PM_{2.5}$	AP42 Table 2.1-12, 10/96 & Appendix B.1 2.1
NO_x	AP42 Table 2.2-1, multiple hear
SO_2	AP42 Table 2.1-12, 10/96
CO	AP42 Table 2.1-12, 10/96
VOC	AP42 Table 2.1-12, 10/96
Lead	Table 2.2-2 - Metals Emission Factors for Mass Burn and Modular Excess Air Combustors

Assumptions	References	Conversions
Diesel heat value	Keiser, Ronald email to Chris Tengco, 01/26/09.	1.340 hp/kW
133,098 Btu/gal		454 g/lb
0.1331 MMBtu/gal		3,600 sec/hour
Diesel density	SCANRAFF-Vladimir Ignatjuk Certificate of Quality. 09/19/04.	2,000 lb/ton
847.9 kg/m^3		2 wt. conversion of S to SO2
7.08 lb/gal		264 gal/m^3
ICE Engines diesel heat rate	AP42 Table 3.3-1, 10/96	
7,000 Btu/hp-hr		
0.007 MMBtu/hp-hr		

Emissions Units: OSR Fleet Nanuq (Main Oil Spill Response Vessel)

Emissions Factors

	Units	PM_{10}	$PM_{2.5}$	NO_x	SO_2	CO	VOC	Lead
ICE Propulsion Engines	lb/MMBtu	0.044	0.044	3.536	0.0016	0.190	0.257	2.90E-05
ICE Generator Engines	lb/MMBtu	0.451	0.362	5.970	0.0016	0.79	0.141	2.90E-05
Incinerator	lb/lb	6.65E-03	4.55E-03	1.50E-03	1.25E-03	1.50E-01	5.00E-02	1.07E-04

Control Efficiency

	PM_{10}	$PM_{2.5}$	NO_x	SO_2 [1]	CO	VOC	Lead
ICE Propulsion & Generators	85%	85%	0%	0%	90%	90%	0%
All Remaining Sources	0%	0%	0%	0%	0%	0%	0%

	Rating	Max Actual fuel consumpt. MMBtu/hr	Hourly Emission Rate, lb/hr PM_{10}	$PM_{2.5}$	NO_x	SO_2	CO	VOC	Lead
ICE Propulsion Engines	5,420 kW	46.008	0.30	0.30	162.70	0.07	0.87	1.18	1.33E-03
ICE Generator Engines	2,570 hp	17.990	1.22	0.98	107.40	0.03	1.41	0.25	5.22E-04
Incinerator	125 lb/hr		0.83	0.57	0.19	0.16	18.75	6.25	1.33E-02
Total Nanuq		**63.998**	**2.35**	**1.85**	**270.28**	**0.26**	**21.04**	**7.69**	**1.52E-02**

	ORR days/yr	Capacity	Use hr/day	fuel consumpt. MMBtu/yr	Annual Emission Rate, ton/yr PM_{10}	$PM_{2.5}$	NO_x	SO_2	CO	VOC	Lead
ICE Propulsion Engines [2]	168	100%	24	67,081	0.22	0.22	118.61	0.05	0.64	0.86	9.73E-04
ICE Generator Engines [3]	168	100%	24	17,888	0.61	0.49	53.40	0.01	0.70	0.13	2.59E-04
Incinerator	168		24		1.68	1.15	0.38	0.32	37.80	12.60	2.68E-02
Total Nanuq				**84,969.763**	**2.50**	**1.85**	**172.38**	**0.38**	**39.14**	**13.59**	**2.81E-02**

Operational Restrictions

[1] Sulfur content on all stationary source engines on Discoverer & Nanuq 0.0015% by wt.
[2] OSR Main Ship propulsion limited to: 3000 gal/day
[3] OSR Main Ship generation limited to : 800 gal/day

Control Device Effectiveness		References
Discoverer small engines (other than Tier 3 engines) and Nanuq propulsion and generation Catalytic Diesel Particulate Filter (CDPF) CO, VOC, HAPs, reduction efficiency	90%	CleanAIR CDPF guarantee
Discoverer small engines (other than Tier 3 engines) and Nanuq propulsion and generation CDPF PM reduction efficiency	85%	California Air Resource Board Currently verified, January 2009, CleanAIR Systems PERMIT

Emission Limits and Test Methods

ICE Propulsion Engines

PM_{10}	Control Method:	CDPF	Control Efficiency:	85%		
	Uncontrolled emission rate:	0.17 g/kW-hr	0.228 g/hp-hr		Ref:	Caterpillar 3608 Specification Sheet, DM5529, 10/06
	Proposed BACT emission rate:	0.026 g/kW-hr	0.034 g/hp-hr			
	Proposed emission test methods:	EPA methods 1-4 & 5, at engine load >50%			Interval:	triplicate consecutive 1-hour tests.
CO	Control Method:	CDPF	Control Efficiency:	90%		
	Uncontrolled emission rate:	0.73 g/kW-hr	0.978 g/hp-hr		Ref:	Caterpillar 3608 Specification Sheet, DM5529, 10/06
	Proposed BACT emission rate:	0.073 g/kW-hr	0.098 g/hp-hr			
	Proposed emission test methods:	EPA methods 1-4 & 10, at engine load >50%			Interval:	triplicate consecutive 1-hour tests.

ICE Generator Engines

PM_{10}	Control Method:	CDPF	Control Efficiency:	85%		
	Uncontrolled emission rate:	1.92 g/kW-hr	2.57 g/hp-hr		Ref:	Corbett, Koehler. Revised: 05/03
	Proposed BACT emission rate:	0.288 g/kW-hr	0.39 g/hp-hr			
	Proposed emission test methods:	EPA methods 1-4 & 5, at engine load >50%			Interval:	triplicate consecutive 1-hour tests.
CO	Control Method:	CDPF	Control Efficiency:	90%		
	Uncontrolled emission rate:	5.50E-03 lb/hp-hr	2.49 g/hp-hr		Ref:	AP42 Table 3.4-2, 10/96
	Proposed BACT emission rate:	5.50E-04 lb/hp-hr	0.25 g/hp-hr			
	Proposed emission test methods:	EPA methods 1-4 & 10, at engine load >50%			Interval:	triplicate consecutive 1-hour tests.

Emissions Factor References

All Sources	**SO_2**	Sulfur Content Calculation
All ICE Engines	**Lead**	L & E Air Emissions from Sources of Lead and Lead Compounds, EPA 454/R-98-006, May 1998, Section 5.2.2, Distillate oil-fired gas turbines
OSR Main Ship ICE Propulsion Engines	**PM_{10}, NO_x, CO, VOC**	Caterpillar 3608 Specification Sheet, DM5529, 10/06
	$PM_{2.5}$	100% PM_{10}
OSR Main Ship ICE Generators	**NO_x, CO, VOC**	AP42 Table 3.4-2, 10/96
	PM_{10}, $PM_{2.5}$	Corbett, Koehler. Revised: 05/03
OSR Main Ship Incinerator	**PM_{10}, $PM_{2.5}$, NO_x, CO, VOC**	AP42 Table 2.1-12, 10/96
	Lead	AP42 Table 2.2-2 - Metals Emission Factors for Mass Burn and Modular Excess Air Combustors

Assumptions			References	Conversions
Diesel heat value	133,098 Btu/gal	0.1331 MMBtu/gal	Keiser, Ronald email to Chris Tengco, 01/26/09.	1.340 hp/kW
Diesel density	847.9 kg/m^3	7.08 lb/gal	SCANRAFF-Vladimir Ignatjuk Certificate of Quality. 09/19/04.	454 g/lb
ICE Engines diesel heat rate				3,600 sec/hour
	7,000 Btu/hp-hr	0.007 MMBtu/hp-hr	AP42 Table 3.3-1, 10/96	2,000 lb/ton
OSR Main Ship Propulsion (Cat/3608) diesel heat rate				2 wt. conversion of S to SO2
204.7 g/kW-hr	6335 Btu/hp-hr	0.0063 MMBtu/hp-hr		264 gal/m^3

Air Sciences Inc.	PROJECT TITLE: Shell Offshore, Inc.	BY: S. Pryor	
	PROJECT NO: 180-15-1	PAGE: 18	OF: 18
ENGINEERING CALCULATIONS	SUBJECT: Discoverer Emissions-AK OCS	DATE: September 17, 2009	

Emissions Units: OSR Fleet Kvichak 34-foot Oil Spill Response Work Boats

Emissions Factors

	Units	PM_{10}	$PM_{2.5}$	NO_x	SO_2	CO	VOC	Lead
OSR Work Boat ICE Propulsion Engines	lb/MMBtu	0.024	0.024	1.463	0.2020	0.049	0.025	2.90E-05
OSR Work Boat ICE Generators	lb/MMBtu	0.31	0.31	4.41	0.2020	0.95	0.35	2.90E-05

Control Efficiency

	PM_{10}	$PM_{2.5}$	NO_x	SO_2 [1]	CO	VOC	Lead
All Sources	0%	0%	0%	0%	0%	0%	0%

	Rating	Max Actual fuel consumpt. MMBtu/hr	Hourly Emission Rate, lb/hr PM_{10}	$PM_{2.5}$	NO_x	SO_2	CO	VOC	Lead
OSR Work Boat ICE Propulsion Engines	1,800 hp	12.600	0.31	0.31	18.43	2.55	0.62	0.31	3.65E-04
OSR Work Boat ICE Generators	36 hp	0.252	0.08	0.08	1.11	0.05	0.24	0.09	7.31E-06
Total OSR Work Boats		**13**	**0.38**	**0.38**	**19.54**	**2.60**	**0.85**	**0.40**	**3.73E-04**

ORR 168 days/yr

	Capacity	Use hr/day	Max Actual fuel consumpt. MMBtu/yr	Annual Emission Rate, ton/yr PM_{10}	$PM_{2.5}$	NO_x	SO_2	CO	VOC	Lead
OSR Work Boat ICE Propulsion Engines	100%	24	50,803	0.62	0.62	37.15	5.13	1.24	0.62	7.37E-04
OSR Work Boat ICE Generators	100%	24	1,016	0.16	0.16	2.24	0.10	0.48	0.18	1.47E-05
Total OSR Work Boats			**51,819**	**0.77**	**0.77**	**39.39**	**5.23**	**1.72**	**0.80**	**7.51E-04**

Operational Restrictions

[1] Sulfur content on ice breaker, anchor handler, and OSR work boats 0.1900% by wt.

Control Device Effectiveness	References
Discoverer small engines (other than Tier 3 engines) and Nanuq propulsion and generation Catalytic Diesel Particulate Filter (CDPF) CO, VOC, HAPs, reduction efficiency	90% CleanAIR CDPF guarantee
Discoverer small engines (other than Tier 3 engines) and Nanuq propulsion and generation CDPF PM reduction efficiency	85% California Air Resource Board Currently verified, January 2009, CleanAIR Systems PERMIT

Emissions Factor References

All Sources	**SO_2**	Sulfur Content Calculation
All ICE Engines	**Lead**	L & E Air Emissions from Sources of Lead and Lead Compounds, EPA 454/R-98-006, May 1998, Section 5.2.2, Distillate oil-fired gas turbines
OSR Work Boat ICE Propulsion Engines	**PM_{10}, NO_x, CO, VOC**	Cummins Engine Model: QSB5.9-305 MCD Spec Sheet, 10/06
	$PM_{2.5}$ 100% PM_{10}	
OSR Work Boat ICE Generators	**PM_{10}, NO_x, CO, VOC**	AP42 Table 3.3-1, 10/96
	$PM_{2.5}$ 100% PM_{10}	

Assumptions			References	Conversions	
Diesel heat value	133,098 Btu/gal	0.1331 MMBtu/gal	Keiser, Ronald email to Chris Tengco, 01/26/09.	1.340	hp/kW
Diesel density	847.9 kg/m^3	7.08 lb/gal	SCANRAFF-Vladimir Ignatjuk Certificate of Quality. 09/19/04.	454	g/lb
ICE Engines diesel heat rate				3,600	sec/hour
	7,000 Btu/hp-hr	0.007 MMBtu/hp-hr	AP42 Table 3.3-1, 10/96	2,000	lb/ton
				2	wt. conversion of S to SO2
				264	gal/m^3

ATTACHMENT B

Updated ambient impact analysis

Note: The ambient impact discussion provided below is in the same format and section numbers as in the May 29, 2009 (Updated Attachments D and E - Response to EPA Region 10 March 12, 2009 2nd Letter of Incompleteness) and earlier submittals, so that the updates can be easily identified.

This update introduces three incinerator operation scenarios: Base Operating Scenario, Alternate Scenario #1, Alternate Scenario #2. The base case is defined as: On days when there is no HPU usage, incinerator use will be limited to 1300 lb feed.

The alternate operating scenario No. 1 is defined as: On days when HPU fuel use is up to the equivalent of one HPU unit operating at capacity for 24 hours, incineration use will be limited to 800 lb feed.

Alternate operating scenario No. 2 is defined as: On days when no HPU unit is used, incineration use will be limited to 1300 lb feed.

Gray shading indicates changes since the May 29th supplemental submittal.

SECTION 5

AMBIENT IMPACTS

5.7 PSD Modeling Assessment Phases – Preliminary Analysis and Full Impact Analysis

…The results of the preliminary analysis determine whether a full impact analysis (facility plus competing regional sources) for a particular pollutant is necessary. If the ambient impacts from the preliminary analysis are greater than the PSD Significant Impact Levels (SILs) shown in Table 5-6 then the extent of the Significant Impact Area (SIA) of the proposed project is to be determined.

Table 5-6: Summary of Significant Impact Levels and Related Significant Areas

Pollutant	Averaging Time	PSD Class II SIL (µg/m^3)	Screening Model, Max, SIA (km)		
			Base Operating Scenario	Alt. Operating Scenario #1	Alt. Operating Scenario #2
Nitrogen Dioxide (NO_2)	Annual	1	50	50	50
Particulate Matter ($PM_{2.5}$)	24-hour	NA	NA	NA	NA
	Annual	NA	NA	NA	NA
Particulate Matter (PM_{10})	24-hour	5	32.6	32.5	32.5
	Annual	1	3.5	3.7	3.9
Sulfur Dioxide (SO_2)	3-hour	25	11.1	11.1	11.1
	24-hour	5	50	50	50
	Annual	1	5.2	5.3	5.4
Carbon Monoxide (CO)	1-hour	2,000	Not significant	Not significant	Not significant
	8-hour	500	Not Significant	Not Significant	Not Significant

SIL Significant Impact Level
SIA Significant Impact Area
NA not applicable

Initially, the SIA is determined for every relevant averaging time for a particular pollutant. The final SIA for that pollutant is the largest area for each of the various averaging times. According to the EPA's Draft New Source Review Workshop Manual (EPA, 1990), the SIA is a circular area with a radius extending from the source to: (1) the most distant point where approved dispersion modeling predicts a significant ambient impact will occur, or (2) a modeling receptor distance of 50 kilometers, whichever is less. Therefore, a SIA cannot be greater than 50 kilometers for any pollutant. In addition, the Guideline on Air Quality Models (40 CFR 51, Appendix W), indicates that traditional steady-state models (e.g., ISC-PRIME) are applicable for transport distances of 50 km or less. 50 km is the useful distance to which most steady-state Gaussian plume models are considered accurate for setting emission limits.

The full impact analysis expands the preliminary impact analysis by considering emissions from both the proposed project as well as other sources in the SIA (the competing sources). The full impact analysis may also consider other sources outside the SIA that could cause significant impacts in the SIA of the proposed source. The results from the full impact analysis are used to demonstrate compliance with NAAQS and PSD increments. The source inventory for the cumulative NAAQS analysis includes all nearby sources that have significant impacts within the proposed source SIA, while the source inventory for the cumulative PSD increment analysis is limited to increment-affecting sources (new sources and changes to existing sources that have occurred since the applicable increment baseline date).

The full impact analysis is limited to receptor locations within the proposed project's SIA. The modeling results from the NAAQS cumulative impact analysis are added to representative ambient background concentrations, and the total concentrations are compared to the NAAQS. However, the modeled air quality impacts for all increment-consuming sources are directly compared to the PSD increments to determine compliance (without consideration of ambient background concentrations).

Emissions of lead are insignificant and were not evaluated.

SECTION 6

BASELINE CONCENTRATIONS

…Table 6-2 provides a representative estimate of regional background concentrations in remote locations of the Alaska OCS where there are no significant pollution sources with the exception of particulates which are influenced by local sources such as windblown dust from unpaved roads in the village of Wainwright.

Table 6-2: Baseline Concentrations

Pollutant	Averaging Time	Monitored Concentrations Wainwright (1) ($\mu g/m^3$)
NO_2	Annual (2)	2
$PM_{2.5}$	24-hour	14
	Annual (2)	2
PM_{10}	24-hour	114
	Annual (2)	10
SO_2	3-hour	17
	24-hour	10
	Annual (2)	0.5
CO	1-hour	1,050
	8-hour	535

1 Wainwright data provided is for November 2008 through July 2009.

2 Annual average values are based on the period average values from November 2008 through July 2009.

NA Not applicable

SECTION 7

IMPACT MODELING RESULTS

7.1 Worst-Case Concentration Impacts

The *Discoverer* drilling impact summary of Table 7-1 (highest of three modeling scenarios) is developed from the individual source impacts and background concentrations (for NAAQS) for all applicable averaging times. Because the Base Operating Scenario, Alternate Operating Scenario No.1, and Alternate Operating Scenario No. 2 modeling analyses define the worst-case annual impacts, Shell's Chukchi Sea exploratory drilling program will comply with the NAAQS and PSD increments. The modeling results and associated calculations for the annual impacts for the Base Operating Scenario, Alternate Operating Scenario No. 1, and Alternate Operating Scenario No. 2 are provided in Tables 7-2a, 7-2b, and 7-2c. Results and associated calculations for both short-term and annual impacts are summarized in Tables 7-3a, 7-3b, and 7-3c. All electronic modeling files and associated calculations are provided in the CD.

Table 7-1: Summary of Screening Maximum Estimated Short-Term and Annual Concentrations all Sources Combined – Highest of Three Modeling Scenarios

Pollutant	Averaging Time	NAAQS[1] (µg/m^3)	Screening Model Max. Impact Plus Background[2] (µg/m^3)	PSD Class II Increment (µg/m^3)	Screening Model Max. Impact No Background[3] (µg/m^3)
Nitrogen Dioxide (NO_2)	Annual	100	20.2	25	18.2
Particulate Matter ($PM_{2.5}$)	24-hour	35	32.4	NA	NA
	Annual	15	3.3	NA	NA
Particulate Matter (PM_{10})	24-hour	150	133.4	30	19.4
	Annual	50	11.4	17	1.4
Sulfur Dioxide (SO_2)	3-hour	1,300	85.8	512	68.8
	24-hour	365	36.8	91	26.8
	Annual	80	2.5	20	2.0
Carbon Monoxide (CO)	1-hour	40,000	1,444.7	NA	NA
	8-hour	10,000	890.2	NA	NA

[1] National Ambient Air Quality Standards

[2] Maximum modeled impacts plus background concentrations are compared to the NAAQS.

[3] Maximum modeled impacts only (no background concentrations included) are compared to the PSD Increments.

NA Not applicable

Table 7-2a: Impact Scenarios Used to Define Screening Maximum Annual Impacts from All Sources – Base Operating Scenario

Pollutant	Model Run	Impact Category	Max. Impact Location X(m)	Max. Impact Location Y(m)	Modeled 1-Hour Impact [1]	Persistence Factor	Emiss. Adjust [2]	Conc. (μg/m³)
NO_2 [3]	All Sources	At or Beyond Hull	15.7	55.0	978.2	0.10	0.1726	12.7
	No xxd [2]	At or Beyond Hull	15.7	55.0	256.8	0.10	0.2877	5.5
							Total Annual NO_2 Impact (μg/m³) >	*18.2*
Pollutant	Model Run	Impact Category	Max. Impact Location X(m)	Max. Impact Location Y(m)	Modeled 1-Hour Impact [1]	Persistence Factor	Emiss. Adjust [2]	Conc. (μg/m³)
$PM_{2.5}$	All Sources	At or Beyond Hull	15.7	55.0	30.4	0.10	0.1726	0.5
	No xxd [2]	At or Beyond Hull	15.7	55.0	21.1	0.10	0.2877	0.6
							Total Annual $PM_{2.5}$ Impact (μg/m³) >	*1.1*
Pollutant	Model Run	Impact Category	Max. Impact Location X(m)	Max. Impact Location Y(m)	Modeled 1-Hour Impact [1]	Persistence Factor	Emiss. Adjust [2]	Conc. (μg/m³)
PM_{10}	All Sources	At or Beyond Hull	15.7	55.0	30.9	0.10	0.1726	0.5
	No xxd [2]	At or Beyond Hull	15.7	55.0	21.6	0.10	0.2877	0.6
							Total Annual PM_{10} Impact (μg/m³) >	*1.2*
Pollutant	Model Run	Impact Category	Max. Impact Location X(m)	Max. Impact Location Y(m)	Modeled 1-Hour Impact [1]	Persistence Factor	Emiss. Adjust [2]	Conc. (μg/m³)
SO_2	All Sources	At or Beyond Hull	-2084.3	40.0	43.8	0.10	0.1726	0.8
	No xxd [2]	At or Beyond Hull	-2084.3	40.0	41.5	0.10	0.2877	1.2
							Total Annual SO_2 Impact (μg/m³) >	*1.9*

Assume 168 days per drilling season and 63 days of operation per season for HPU engines, air compressors, and resupply, ice management ships (NOx only) at each location.

1 Modeled 1-hour impacts for both sets of model runs (i.e., A) all sources, and B) no HPUs, compressors, cranes, or resupply and ice management ships (NOx only; also called "No_xxd" run) which results in the highest combined impact after emissions adjustments are made.

2 Annual emissions adjustment to modeled hourly emissions to account for duration of drilling season.

For ice management annual NOx compliance limit, ice management activity is assumed for 63 days per season. Thus, model run with all sources is adjusted by 63 days/365 days (i.e., 0.1726) and model run with no HPUs, compressors, cranes, or resupply and ice management ships is adjusted by (168 days - 63 days)/365 days (i.e., 0.2877). For all other pollutants, the ice management annual compliance limit is based on 168 days per season. Thus, model run with all sources is adjusted by 63 days/365 days (i.e., 0.1726) and model run with no HPUs, compressors, cranes, or resupply ships is adjusted by (168 days - 63 days)/365 days (i.e., 0.2877).

3 Assume that $NO_2 = NO_x * 0.75$.

Table 7-2b: Impact Scenarios Used to Define Screening Maximum Annual Impacts from All Sources – Alternate Operating Scenario No. 1

Pollutant	Model Run	Impact Category	Max. Impact Location X(m)	Max. Impact Location Y(m)	Modeled 1-Hour Impact [1]	Persistence Factor	Emiss. Adjust [2]	Conc. (μg/m³)
NO_2 [3]	All Sources	At or Beyond Hull	-2134.3	40.0	729.6	0.10	0.1726	9.4
	No xxd [2]	At or Beyond Hull	-2134.3	40.0	309.5	0.10	0.2877	6.7
							Total Annual NO_2 Impact (μg/m³) >	*16.1*
Pollutant	Model Run	Impact Category	Max. Impact Location X(m)	Max. Impact Location Y(m)	Modeled 1-Hour Impact [1]	Persistence Factor	Emiss. Adjust [2]	Conc. (μg/m³)
$PM_{2.5}$	All Sources	At or Beyond Hull	15.7	55.0	30.5	0.10	0.1726	0.5
	No xxd [2]	At or Beyond Hull	15.7	55.0	24.7	0.10	0.2877	0.7
							Total Annual $PM_{2.5}$ Impact (μg/m³) >	*1.2*
Pollutant	Model Run	Impact Category	Max. Impact Location X(m)	Max. Impact Location Y(m)	Modeled 1-Hour Impact [1]	Persistence Factor	Emiss. Adjust [2]	Conc. (μg/m³)
PM_{10}	All Sources	At or Beyond Hull	15.7	55.0	31.6	0.10	0.1726	0.5
	No xxd [2]	At or Beyond Hull	15.7	55.0	25.7	0.10	0.2877	0.7
							Total Annual PM_{10} Impact (μg/m³) >	*1.3*
Pollutant	Model Run	Impact Category	Max. Impact Location X(m)	Max. Impact Location Y(m)	Modeled 1-Hour Impact [1]	Persistence Factor	Emiss. Adjust [2]	Conc. (μg/m³)
SO_2	All Sources	At or Beyond Hull	-2084.3	40.0	44.1	0.10	0.1726	0.8
	No xxd [2]	At or Beyond Hull	-2084.3	40.0	41.8	0.10	0.2877	1.2
							Total Annual SO_2 Impact (μg/m³) >	*2.0*

Assume 168 days per drilling season and 63 days of operation per season for HPU engines, air compressors, and resupply, ice management ships (NOx only) at each location.

[1] Modeled 1-hour impacts for both sets of model runs (i.e., A) all sources, and B) no HPUs, compressors, cranes, or resupply and ice management ships (NOx only; also called "No_xxd" run) which results in the highest combined impact after emissions adjustments are made.

[2] Annual emissions adjustment to modeled hourly emissions to account for duration of drilling season.

For ice management annual NOx compliance limit, ice management activity is assumed for 63 days per season. Thus, model run with all sources is adjusted by 63 days/365 days (i.e., 0.1726) and model run with no HPUs, compressors, cranes, or resupply and ice management ships is adjusted by (168 days - 63 days)/365 days (i.e., 0.2877). For all other pollutants, the ice management annual compliance limit is based on 168 days per season. Thus, model run with all sources is adjusted by 63 days/365 days (i.e., 0.1726) and model run with no HPUs, compressors, cranes, or resupply ships is adjusted by (168 days - 63 days)/365 days (i.e., 0.2877).

[3] Assume that $NO_2 = NO_x * 0.75$.

Table 7-2c: Impact Scenarios Used to Define Screening Maximum Annual Impacts from All Sources – Alternate Operating Scenario No. 2

Pollutant	Model Run	Impact Category	Max. Impact Location X(m)	Max. Impact Location Y(m)	Modeled 1-Hour Impact [1]	Persistence Factor	Emmis. Adjust [2]	Conc. (μg/m³)
NO_2 [3]	All Sources	At or Beyond Hull	-2134.3	40.0	676.4	0.10	0.1726	8.8
	No xxd [2]	At or Beyond Hull	-2134.3	40.0	310.1	0.10	0.2877	6.7
							Total Annual NO_2 Impact (μg/m³) >	*15.4*
Pollutants	**Model Run**	**Impact Category**	**Max. Impact Location X(m)**	**Max. Impact Location Y(m)**	**Modeled 1-Hour Impact [1]**	**Persistence Factor**	**Emmis. Adjust [2]**	**Conc. (μg/m³)**
$PM_{2.5}$	All Sources	At or Beyond Hull	15.7	55.0	30.6	0.10	0.1726	0.5
	No xxd [2]	At or Beyond Hull	15.7	55.0	28.2	0.10	0.2877	0.8
							Total Annual $PM_{2.5}$ Impact (μg/m³) >	*1.3*
Pollutants	**Model Run**	**Impact Category**	**Max. Impact Location X(m)**	**Max. Impact Location Y(m)**	**Modeled 1-Hour Impact [1]**	**Persistence Factor**	**Emmis. Adjust [2]**	**Conc. (μg/m³)**
PM_{10}	All Sources	At or Beyond Hull	15.7	55.0	32.3	0.10	0.1726	0.6
	No xxd [2]	At or Beyond Hull	15.7	55.0	29.9	0.10	0.2877	0.9
							Total Annual PM_{10} Impact (μg/m³) >	*1.4*
Pollutant	**Model Run**	**Impact Category**	**Max. Impact Location X(m)**	**Max. Impact Location Y(m)**	**Modeled 1-Hour Impact [1]**	**Persistence Factor**	**Emmis. Adjust [2]**	**Conc. (μg/m³)**
SO_2	All Sources	At or Beyond Hull	-2084.3	40.0	44.4	0.10	0.1726	0.8
	No xxd [2]	At or Beyond Hull	-2084.3	40.0	42.1	0.10	0.2877	1.2
							Total Annual SO_2 Impact (μg/m³) >	*2.0*

Assume 168 days per drilling season and 63 days of operation per season for HPU engines, air compressors, and resupply, ice management ships (NOx only) at each location.

[1] Modeled 1-hour impacts for both sets of model runs (i.e., A) all sources, and B) no HPUs, compressors, cranes, or resupply and ice management ships (NOx only; also called "No_xxd" run) which results in the highest combined impact after emissions adjustments are made.

[2] Annual emissions adjustment to modeled hourly emissions to account for duration of drilling season.

For ice management annual NOx compliance limit, ice management activity is assumed for 63 days per season. Thus, model run with all sources is adjusted by 63 days/365 days (i.e., 0.1726) and model run with no HPUs, compressors, cranes, or resupply and ice management ships is adjusted by (168 days - 63 days)/365 days (i.e., 0.2877). For all other pollutants, the ice management annual compliance limit is based on 168 days per season. Thus, model run with all sources is adjusted by 63 days/365 days (i.e., 0.1726) and model run with no HPUs, compressors, cranes, or resupply ships is adjusted by (168 days - 63 days)/365 days (i.e., 0.2877).

[3] Assume that $NO_2 = NO_x * 0.75$.

Table 7-3a: Combined Screening Maximum Impacts from All Sources and Multiple Sequential Wells – Base Operating Scenario

Pollutant	Averaging Period	Max. Modeled 1-Hour Impact at or Beyond Hull	Persistence Factor	Emis. Adj. [1]	Concentration (μg/m³) Total No Background	Concentration (μg/m³) Background	Concentration (μg/m³) Total w/ Background	PSD Class II Increment (μg/m³)	Comply?	NAAQS (μg/m³)	Comply?	Sig. Monitoring Concentration (μg/m³)	Exceed?
NO_2 [2]	Annual	See Calculations in Table 7-2			18.2	2	20.2	25	Yes	100	Yes	14	Yes
$PM_{2.5}$	24-Hour	30.4	0.6	1	18.3	14	32.3	---	---	35	Yes	---	---
	Annual	See Calculations in Table 7-2			1.1	2	3.1	---	---	15	Yes	---	---
PM_{10}	24-Hour	31.0	0.6	1	18.6	114	132.6	30	Yes	150	Yes	10	Yes
	Annual	See Calculations in Table 7-2			1.2	10	10.8	17	Yes	50	Yes	---	---
SO_2	3-Hour	68.8	1.0	1	68.8	17	85.8	512	Yes	1,300	Yes	---	---
	24-Hour	44.2	0.6	1	26.5	10	36.5	91	Yes	365	Yes	13	Yes
	Annual	See Calculations in Table 7-2			1.9	0.5	1.9	20	Yes	80	Yes	---	---
CO	1-Hour	394.7	1.0	1	394.7	1050	1444.7	---	---	40,000	Yes	---	---
	8-Hour	394.7	0.9	1	355.2	535	890.2	---	---	10,000	Yes	575	No

Assume 168 days per drilling season and 63 days of operation per drilling season for HPU engines, air compressors, cranes, and resupply and ice management ships (NOx only).

[1] Annual emissions adjustment to modeled hourly emissions; assume 168 days per season and the HPUs, compressors, cranes and resupply and ice management ships (NOx only) are limited to 63 days per season. Ice management is limited to 168 days per season for $PM_{2.5}$, PM_{10}, SO_2, and CO. Short term emissions assume 24 hour per day operations.

[2] Assume that $NO_2 = NO_x * 0.75$.

Table 7-3b: Combined Screening Maximum Impacts from All Sources and Multiple Sequential Wells – Alternate Operating Scenario No. 1

Pollutant	Averaging Period	Max. Modeled 1-Hour Impact at or Beyond Hull	Persistence Factor	Emmis. Adj. [1]	Concentration (μg/m³) Total No Background	Background	Total w/ Background	PSD Class II Increment (μg/m³)	Comply?	NAAQS (μg/m³)	Comply?	Sig. Monitoring Concentration (μg/m³)	Exceed?
NO_2 [2]	Annual	See Calculations in Table 7-2			16.1	2	18.1	25	Yes	100	Yes	14	Yes
$PM_{2.5}$	24-Hour	30.5	0.6	1	18.3	14	32.3	---	---	35	Yes	---	---
	Annual	See Calculations in Table 7-2			1.2	2	3.2	---	---	15	Yes	---	---
PM_{10}	24-Hour	31.6	0.6	1	19.0	114	133.0	30	Yes	150	Yes	10	Yes
	Annual	See Calculations in Table 7-2			1.3	10	11.0	17	Yes	50	Yes	---	---
SO_2	3-Hour	68.8	1.0	1	68.8	17	85.8	512	Yes	1,300	Yes	---	---
	24-Hour	44.4	0.6	1	26.6	10	36.6	91	Yes	365	Yes	13	Yes
	Annual	See Calculations in Table 7-2			2.0	0.5	2.0	20	Yes	80	Yes	---	---
CO	1-Hour	394.7	1.0	1	394.7	1050	1444.7	---	---	40,000	Yes	---	---
	8-Hour	394.7	0.9	1	355.2	535	890.2	---	---	10,000	Yes	575	No

Assume 168 days per drilling season and 63 days of operation per drilling season for HPU engines, air compressors, cranes, and resupply and ice management ships (NOx only).

[1] Annual emissions adjustment to modeled hourly emissions; assume 168 days per season and the HPUs, compressors, cranes and resupply and ice management ships (NOx only) are limited to 63 days per season. Ice management is limited to 168 days per season for $PM_{2.5}$, PM_{10}, SO_2, and CO. Short term emissions assume 24 hour per day operations.

[2] Assume that $NO_2 = NO_x * 0.75$.

Table 7-3b: Combined Screening Maximum Impacts from All Sources and Multiple Sequential Wells – Alternate Operating Scenario No. 2

Pollutant	Averaging Period	Max. Modeled 1-Hour Impact at or Beyond Hull	Persistence Factor	Emmis. Adj. [1]	Concentration (μg/m³) Total No Background	Background	Total w/ Background	PSD Class II Increment (μg/m³)	Comply?	NAAQS (μg/m³)	Comply?	Sig. Monitoring Concentration (μg/m³)	Exceed?
NO_2 [2]	Annual	See Calculations in Table 7-2			15.4	2	17.4	25	Yes	100	Yes	14	Yes
$PM_{2.5}$	24-Hour	30.6	0.6	1	18.4	14	32.4	---	---	35	Yes	---	---
	Annual	See Calculations in Table 7-2			1.3	2	3.3	---	---	15	Yes	---	---
PM_{10}	24-Hour	32.3	0.6	1	19.4	114	133.4	30	Yes	150	Yes	10	Yes
	Annual	See Calculations in Table 7-2			1.4	10	11.1	17	Yes	50	Yes	---	---
SO_2	3-Hour	68.7	1.0	1	68.7	17	85.7	512	Yes	1,300	Yes	---	---
	24-Hour	44.6	0.6	1	26.8	10	36.8	91	Yes	365	Yes	13	Yes
	Annual	See Calculations in Table 7-2			2.0	0.5	2.0	20	Yes	80	Yes	---	---
CO	1-Hour	380.1	1.0	1	380.1	1050	1430.1	---	---	40,000	Yes	---	---
	8-Hour	380.1	0.9	1	342.1	535	877.1	---	---	10,000	Yes	575	No

Assume 168 days per drilling season and 63 days of operation per drilling season for HPU engines, air compressors, cranes, and resupply and ice management ships (NOx only).

[1] Annual emissions adjustment to modeled hourly emissions; assume 168 days per season and the HPUs, compressors, cranes and resupply and ice management ships (NOx only) are limited to 63 days per season. Ice management is limited to 168 days per season for $PM_{2.5}$, PM_{10}, SO_2, and CO. Short term emissions assume 24 hour per day operations.

[2] Assume that $NO_2 = NO_x * 0.75$.

Note that the worst-case impacts in Tables 7-3a, 7-3b, and 7-3c are also compared to the significant monitoring concentration thresholds. For any criteria pollutant that Shell proposes to emit in significant quantities, continuous monitoring data may be required as part of the air quality analysis. The permitting agency has discretionary authority to exempt a permit applicant from this data requirement if, 1) the highest modeled ambient impacts, or 2) the existing ambient pollutant concentrations are less than the significant monitoring concentration listed in Tables 7-3a, 7-3b, and 7-3c. Existing ambient background NO_2, PM_{10} and SO_2 concentrations and maximum modeled impacts exceed the significant monitoring thresholds. As part of the Wainwright monitoring program, these pollutants along with other criteria pollutants, including ozone, are being gathered for use in the ambient impact analysis. Note that ozone monitoring is required since the project has NO_x emissions (ozone precursor emissions) greater than 100 tons per year.

7.2 Source Contribution Analyses at Maximum Impact Location

EPA has asked that Shell provide a breakdown of individual source contributions. A source contribution analysis for 24-hour average $PM_{2.5}$ and annual average NO_2 is provided in Table 7-4. These pollutants and averaging times are presented since these are the highest impacts relative to the applicable ambient standards. Maximum impacts for annual NO_2 are driven by poorer dispersing engines (HPU engines and cementing units) on the *Discoverer* and the OSR and ice management fleet while the 24-hour $PM_{2.5}$ impacts are dominated by the incinerator on the *Discoverer*. The maximum impact locations and corresponding receptor coordinates are provided at the bottom of Table 7-4.

Table 7-4: Discoverer Source Contributions at the Screening Maximum Impact Locations

Source Description	Model Source ID	Impact Contribution (%)					
		Base Operating Scenario		Alt. Operating Scenario #1		Alt. Operating Scenario #2	
		Annual NO_2	24-Hour $PM_{2.5}$	Annual NO_2	24-Hour $PM_{2.5}$	Annual NO_2	24-Hour $PM_{2.5}$
Stack #1: 6 Main Drill Engines	MAINENGS	5	30	3	30	3	30
Stack #2: 3 Air Compressors	COMPENGS	3	4	5	4	5	4
Stack #3: 2 HPU Engines	HPPENGS	30	23	4	11	0	0
Stack #4: 3 Cementing Units	CEMENT	34	13	13	13	13	13
Stack #5a: Crane Engine (port)	CRANE_PT	0	0	0	0	0	0
Stack #5b: Crane Engine (stbd)	CRANE_SB	20	4	7	4	7	4
Stack #6: 2 Heat Boilers	HEATBOIL	7	16	5	16	5	15
Stack #8: 1 Incinerator	INCIN_D	0.3	7	0.2	19	0.4	30
Resupply Ship - Docked	KILABUK	0	0	2	0	2	0
Resupply Ship - Transit	RST_1-80	0	0	2	0	2	0
Oil Spill Response Ships	OILSPL01-40	0	0	46	0	48	0
Ice Management (Secondary)	BRK_B01-48	0.1	2	2	2	2	2
Ice Management (Primary)	BRK_A01-96	0.3	2	11	2	12	2
	Total >	100	100	100	100	100	100
X-Receptor Coordinate (m) >		15.8	15.8	-2134.3	15.8	-2134.3	15.8
Y-Receptor Coordinate (m) >		55.3	55.3	40.0	55.3	40.0	55.3
General Location >		Disco Hull	Disco Hull	OSR Area	Disco Hull	OSR Area	Disco Hull

7.3 Impacts from the Ice Management and Anchor Handler Fleet

EPA has asked that Shell provide a table showing the maximum concentration impacts from both the primary and the secondary ice management ships and its locations. As expected, if the impacts from all source operations show compliance with the ambient standards as shown in Table 7-3 above, then the impacts from each of the ice management ships individually will also be less than the ambient standards. The maximum impacts from the primary ice management fleet and secondary ice management fleet are provided below in Table 7-5 and 7-6, respectively, and impacts are well below the PSD increment and NAAQS thresholds.

Table 7-5: Maximum Impacts from Primary Ice Management Ship

Pollutant	Averaging Period	Coordinate of Max. Impact Receptor X (m)	Coordinate of Max. Impact Receptor Y (m)	Max. Modeled 1-Hr Impact (μg/m³)	Persistence Factor	Emission Adjustment [1]	Concentration (μg/m³) Max. Modeled Impact (μg/m³)	Concentration (μg/m³) Background	Concentration (μg/m³) Total No Background	Concentration (μg/m³) Total w/ Background	PSD Class II Increment [2] (μg/m³)	PSD Class II Increment [2] Comply?	NAAQS [3] (μg/m³)	NAAQS [3] Comply?
NO_2	Annual	4,800.0	-4,500.0	252.9	0.1	0.1726	3.3	2	3.3	5.3	25	Yes	100	Yes
$PM_{2.5}$	24-Hour	4,800.0	-4,500.0	9.6	0.6	1	5.8	14	5.8	19.8	---	---	35	Yes
	Annual	4,800.0	-4,500.0	9.6	0.1	0.4603	0.4	2	0.4	2.4	---	---	15	Yes
PM_{10}	24-Hour	4,800.0	-4,500.0	11.0	0.6	1	6.6	114	6.6	120.6	30	Yes	150	Yes
	Annual	4,800.0	-4,500.0	11.0	0.1	0.4603	0.5	10	0.5	10.2	17	Yes	50	Yes
SO_2	3-Hour	4,800.0	-4,500.0	9.5	1.0	1	9.5	17	9.5	26.5	512	Yes	1,300	Yes
	24-Hour	4,800.0	-4,500.0	9.5	0.6	1	5.7	10	5.7	15.7	91	Yes	365	Yes
	Annual	4,800.0	-4,500.0	9.5	0.1	0.4603	0.4	0.5	0.4	0.4	20	Yes	80	Yes
CO	1-Hour	4,800.0	-4,500.0	39.1	1.0	1	39.1	1050	39.1	1089.1	---	---	40,000	Yes
	8-Hour	4,800.0	-4,500.0	39.1	0.9	1	35.2	535	35.2	570.2	---	---	10,000	Yes

[1] For short-term impacts assume 24-hour day operations (adjustment = 1) for annual impacts assume 63 days per drilling season for NOx (adjustment = 63 days/365 days) and and 168 days per drilling season for $PM_{2.5}$, PM_{10}, and SO_2 (adjustment = 168 days/365 days).

[2] Impacts without background concentrations are compared to the PSD increments.

[3] Impacts including background concentrations are compared to the NAAQS.

Table 7-6: Maximum Impacts from Secondary Ice Management Ship

Pollutant	Averaging Period	Coordinate of Max. Impact Receptor		Max. Modeled 1-Hr Impact (μg/m³)	Persistence Factor	Emission Adjustment [1]	Concentration (μg/m³)				PSD Class II Increment [2]		NAAQS [3]	
		X (m)	Y (m)				Max. Modeled Impact (μg/m³)	Background	Total No Background	Total w/ Background	(μg/m³)	Comply?	(μg/m³)	Comply?
NO_2	Annual	1000.0	-2100.0	41.9	0.1	0.1726	0.5	2	0.5	2.5	25	Yes	100	Yes
$PM_{2.5}$	24-Hour	1000.0	-2100.0	5.2	0.6	1	3.1	14	3.1	17.1	---	---	35	Yes
	Annual	1000.0	-2100.0	5.2	0.1	0.4603	0.2	2	0.2	2.2	---	---	15	Yes
PM_{10}	24-Hour	1000.0	-2100.0	5.3	0.6	1	3.2	114	3.2	117.2	30	Yes	150	Yes
	Annual	1000.0	-2100.0	5.3	0.1	0.4603	0.2	10	0.2	9.9	17	Yes	50	Yes
SO_2	3-Hour	1000.0	-2100.0	18.5	0.9	1	18.5	17	18.5	35.5	512	Yes	1,300	Yes
	24-Hour	1000.0	-2100.0	18.5	0.6	1	11.1	10	11.1	21.1	91	Yes	365	Yes
	Annual	1000.0	-2100.0	18.5	0.1	0.4603	0.9	0.5	0.9	0.9	20	Yes	80	Yes
CO	1-Hour	1000.0	-2100.0	78.0	1.0	1	78.0	1050	78.0	1128.0	---	---	40,000	Yes
	8-Hour	1000.0	-2100.0	78.0	0.9	1	70.2	535	70.2	605.4	---	---	10,000	Yes

[1] For short-term impacts assume 24-hour day operations (adjustment = 1) for annual impacts assume 64 days per drilling season for NOx (adjustment = 63 days/365 days) and and 168 days per drilling season for $PM_{2.5}$, PM_{10}, and SO_2 (adjustment = 168 days/365 days).

[2] Impacts without background concentrations are compared to the PSD increments.

[3] Impacts including background concentrations are compared to the NAAQS.

7.4 Worst-Case Screening Impacts at Nearest Villages on Chukchi Coast

Based on Figure 1-1, the nearest coastal villages to the existing Shell leases are Wainwright and Point Lay, which are approximately 110 and 100 kilometers away from the nearest Shell leases, respectively. Worst-case impacts from the proposed project using the screening analysis are provided in Table 7-7 and are well below the NAAQS and PSD increments at these locations

Table 7-7: Worst-Case Screening Impacts at Nearest Villages on Chukchi Coast – Highest of Three Modeling Scenarios

Pollutant	Averaging Period	Concentration (μg/m³)					PSD Class II Increment [2] (μg/m³)	Comply?	NAAQS [3] (μg/m³)	Comply?	Shell Impact % NAAQS
		Max. Modeled [1]									
		Wainwright	Point Lay	Background	Total No Background	Total w/ Background					
NO_2	Annual	1.7	1.8	2	1.8	3.8	25	Yes	100	Yes	2
$PM_{2.5}$	24-Hour	2.6	2.7	14	2.7	16.7	---	---	35	Yes	8
	Annual	0.2	0.2	2	0.2	2.2	---	---	15	Yes	1
PM_{10}	24-Hour	2.8	3.0	114	3.0	117.0	30	Yes	150	Yes	2
	Annual	0.2	0.2	10	0.2	9.9	17	Yes	50	Yes	0.4
SO_2	3-Hour	7.3	7.8	17	7.8	24.8	512	Yes	1,300	Yes	1
	24-Hour	4.1	4.4	10	4.4	14.4	91	Yes	365	Yes	1
	Annual	0.3	0.3	0.5	0.3	0.8	20	Yes	80	Yes	0.4
CO	1-Hour	34.1	36.4	1050	36.4	1086.4	---	---	40,000	Yes	0.1
	8-Hour	30.7	32.8	535	32.8	567.8	---	---	10,000	Yes	0.3

[1] The nearest villages to Shell's Chukchi leases are Wainwright (~110 km away) and Point Lay (~100 km away).

[2] Total impact without background is compared to the PSD increments.

[3] Total impact with background is compared to the NAAQS.

Shell Offshore Inc.
3601 C Street, Suite 1314
Anchorage, AK 99503

October 20, 2009

Shell Chukchi OCS Air Permit
EPA Region 10
1200 6th Ave. Ste. 900, AWT-107
Seattle, WA 98101

RE: Shell Gulf of Mexico Inc. Supplemental Comments on the August 2009 Proposed Discoverer/Chukchi OCS/PSD Permit to Construct

Dear EPA:

This letter provides a brief addition to the supplemental comments Shell Gulf of Mexico submitted to EPA earlier today.

2.0 POTENTIAL CORRECTION TO DURATION OF STATUS AS OCS SOURCE

Please add the following to the end of the second full paragraph on page 2:

"…are described in detail in Attachment A to those comments. As discussed in Attachment A, this modified definition also is needed to conform the permit to the Minerals Management Services' determination of when its regulatory jurisdiction over the Discoverer will be triggered."

ATTACHMENT A Basis for Potential Modification of OCS Source Definition

Please add the following as the first complete paragraph on page A-3:

"The forgoing analysis is consistent with the Minerals Management Service's analysis of jurisdiction. MMS (Jeffrey Walker) has advised Shell that MMS considers a Mobile Offshore Drilling Unit (MODU), such as the Discoverer, to be an "OCS Facility" after all anchors have been set. MMS's position is that a MODU cannot be conducting exploratory operations as an OCS facility if all anchors have not been set. Thus, on the all important question of when the Discoverer is "attached" and "erected" under Section 4(a) of OCSLA, and thus becomes a "facility regulated under [OCSLA]" for purposes of 40 C.F.R. 55.2, it would appear MMS' approach would confirm that this occurs only when the Discoverer at a minimum has all anchors emplaced and tensioned and is ready to conduct exploratory operations."

We remain available to discuss or expand on this concept as needed.

Sincerely,

Susan Childs

cc: Lance Tolson
Keith Craik
Nicole St. Amand
Rick Fox
Mark Schindler – Octane LLC
Rodger Steen – Air Sciences, Inc.
Eric Hansen – Environ International
Jeffrey Walker – Minerals Management Service

-----Original Message-----
From: Rodger Steen [mailto:rsteen@airsci.com]
Sent: Monday, October 19, 2009 8:19 PM
To: Nair.Pat@epamail.epa.gov
Cc: Susan.Childs@shell.com; 'Mark Schindler'; Lance.Tolson@shell.com; Duane Siler; Environ - Eric Hansen; 'John Iani'
Subject: RE: Clarifications Needed on Incebreaker #2
Attachments: Brochure_M_32_C_gen efficiency.pdf; TV-KullukApp2006EmissionsData.pdf

Pat,

Here are our responses to your recent verbal questions:

Shell's proposed measurement of load on Icebreaker and Anchor Handler.
Note from the September 17, 2009 letter and associated permit markup that the Icebreaker and Tor Viking load monitoring systems are installed on both the propulsion and utility generators, so operation and emissions from each of the emission units can be tracked separately.

Why Shell disregards the difference between shaft and electrical output in the emission factors used (documentation of high genset generator efficiency).
Our application and supplements have applied emission factors based on both engine output (shaft power) and generator output (electric power) for the engine / generator sets (gensets). The information referenced herein shows that these two emission factors are about 4 percent of each other, well within the variability of the emission factors themselves and associated impact analysis. The Caterpillar generator efficiency for large generators is provided on its web page of gensets. Look at gensets over 1000 kw in capacity. http://www.cat.com/cda/layout?m=39280&x=7&f=217190. For example, taking the "continuous" specifications (upper left corner of page) of the Model 3512C (1230 eKW), heat rejection from the generator is 52.6 kw, or 4.3 percent. Thus the conversion from shaft power to electrical power is 95.7 percent efficient. Generator efficiencies of other Caterpillar gensets are essentially the same. As a second example and in particular to the MaK engine (used on the Tor Viking), from the attachment to this e-mail, page 14, footnote to table, the generator conversion efficiency is 96 percent.

And, our responses to your written questions:

Questions 1 & 2.
You are requesting that the Corbett/Koehler (Revised May 2003) international fleet emission factors now be used for the Tor Viking, (except for NOx). These generic factors are based on international fleet averages where 80 percent of the fuel consumption is residual oil with average sulfur content of 2.7 percent (page ACH 9-2), and consumed primarily in low-speed two-cycle marine engines. These engine and fuel types bear no relationship to the Tor Viking which is equipped with recently manufactured four stroke, high velocity engines and will consume only low sulfur fuel(less than 0.19 percent) and that fuel is diesel, which is a more highly refined (cleaner) fuel. Moreover, the Tor Viking engine exhaust passes through SCR emission controls and, although SCR is designed specifically to remove NOx, it also removes some of the other exhaust pollutants. As you know, an SCR cannot tolerate high particulate matter concentrations, so the substantial increase in emissions implied by the use of the Corbett data is inappropriate.

Although generic marine emission factors may be relevant if a specific vessel is not being addressed, that is not the case here. We discussed representative Tor Viking emission factors with EPA R10 in 2007 during the permitting of the Kulluk Drilling Project and concluded that AP42 based emissions factors (EPA - generated factors) were more representative in this application. The emission factors used in Shell's September 17, 2009 letter

to EPA are the same as those developed and supported by EPA Region 10 in the 2007 permitting of the Kulluk project (R10OCS-AK-07-01). The 2007-accepted emission factors were vetted in the public comment process and there was no questioning of these emission factors, even through the EAB review process. The factors provided in our September 17 request for the Tor Viking are the same as used in the Kulluk permit and are appropriate for use with the current permit application. Furthermore, Shell expects to be required to demonstrate compliance with these 2007 Kulluk permit emission factors through start-up stack testing.

The NOx stack test results from which the Tor Viking emission factors arose are attached, pages 3 through 7.

Question 3.
The propulsion / generator engines (gensets) have not yet been selected, however, the manufacturer has committed to the Marine Tier 4 standards, for the marine engine category 2, kW > 3700, 15 < D < 30, 2014 - 2015, which are listed in Table 3 of 40CFR 1042.101. As shown on our September 17 emission spreadsheet, Appendix A, page 23, these Tier 4 emission factors are:

PM: 0.25 g/kW-hr
NOx: 1.8 g/kW-hr
HC: 0.19 g/kW-hr

Since these emission factors are the largest of the Table 3 set, we presume that Tier 4 engines at least down to 2000 kW would also be acceptable selections for the Hull 247.

Question 4.
The Hull 247 incinerator has not been ordered. Committing to a specific model before it is ordered can be problematic as model numbers may change, and it eliminates competition for sale of the incinerator. The Hull 247 manufacturer can commit to a TeamTec OGS200CSW incinerator or its substantial equivalent in feed and heat rates as a maximum size. They may select a smaller unit.

Rodger

Rodger G. Steen
Air Sciences Inc.
1301 Washington Ave., Suite 200
Golden, CO 80401
303-807-8024

-----Original Message-----
From: Nair.Pat@epamail.epa.gov [mailto:Nair.Pat@epamail.epa.gov]
Sent: Friday, October 16, 2009 11:38 AM
To: rsteen@airsci.com
Subject: Clarifications Needed on Incebreaker #2

Rodger:

Hope you had a good flight home. Thanks for fielding my call while you were on vacation.

As we discussed, I thought I'd send an e-mail identifying the clarification I was seeking on Icebreaker #2:

1. The emissions from the Tor Viking engines appear to be based on AP-42 and on a void EPA permit (for NOx). The NOx emission factors appear to be based on source tests on the three engines categories

(8M32, 6M32 and 3412). I am not able to locate the source tests that these were based on. Could you send the summary pages from the source tests to me.

2. In the absence of engine-specific emission factors for the 4 propulsion engines (8M32 and 6M32), the default EFs used in EPA's emission inventory should be used as they better reflect emissions from marine propulsion engines. Please either send me engine-specific emission factors or use the default emission factors from EPA's emission inventory for this project.

3. Without specifics on the engines for Hull 247, it is not possible to conclude if the correct Tier 4 emission limits have been used. Please send me information on the Hull 247 engines - maximum rating (in hp or mechanical kW), fuel usage rate, engine cylinder displacement etc.

4. Please confirm that the incinerators on either Icebreaker #2 will be a TeamTecOGS200CSW.

THanks

Pat Nair
Ph. 208-378-5754
Fax: 208-378-5744
Office of Air, Waste & Toxics
U.S. EPA Region 10
1435 N. Orchard Street
Boise, Idaho 83706

M 32 C

Long-Stroke Diesel Engines for Maximum Efficiency and High Reliability

6 • 8 • 9 — In-line Engines

12 • 16 — V-Type Engines

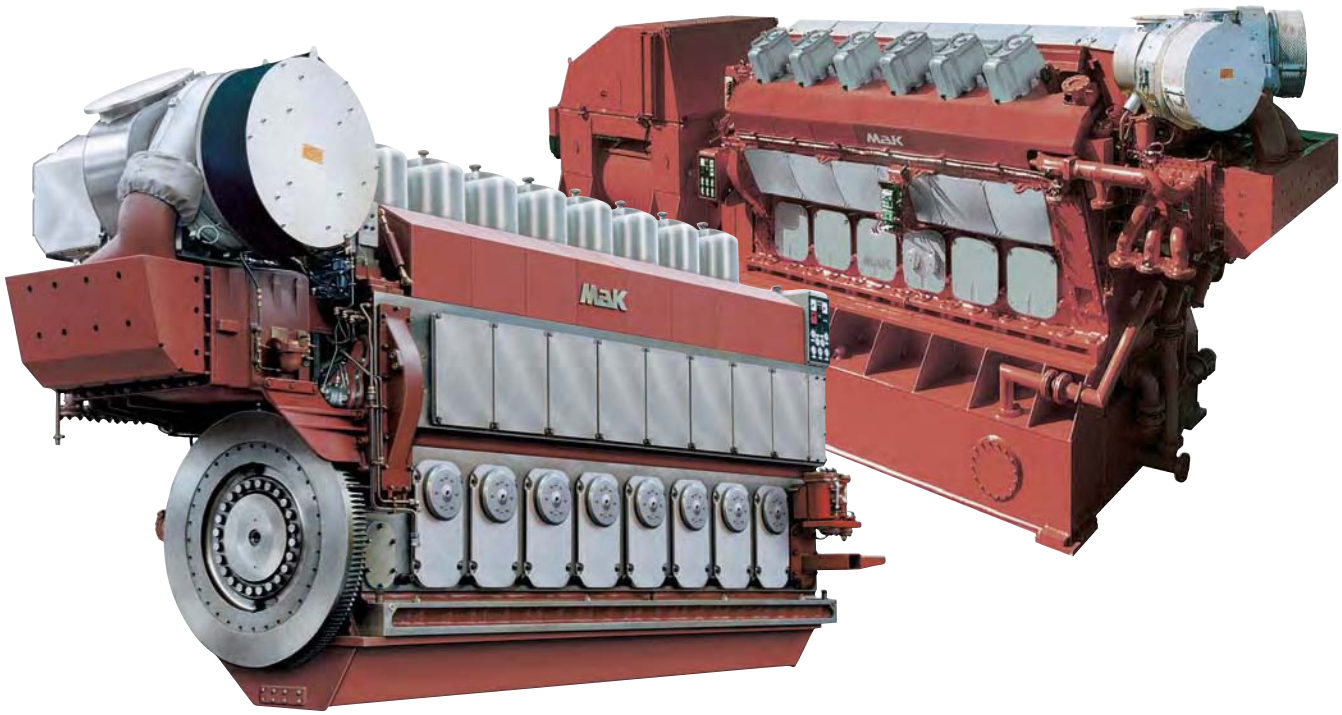

MaK

CATERPILLAR®

M 32 C – Powerful, Reliable and Economical

The acceptance of the M 32 C long-stroke engine series in the marine industry is a success story whose equal is hard to find in this power class.

Since its introduction in 1994, more than 1300 engines have been sold.

80% of those commissioned are marine propulsion engines and 20% are in electrical generator sets.

The M 32 C series is a genuine heavy fuel engine and 75% of all engines commissioned burn the economical heavy fuel oil.

The M 32 C long-stroke series, with a bore of 320 mm, has continued the market success of its predecessor in this bore size, the M 453 C.

Decisive factors in its development have been the requirements for maximum benefit to the customer, i.e. economy and operational reliability. Environmental aspects however have also been important.

Operational results have fully confirmed the design objectives.

Further development, which led to the M 32 C version with 500 kW, has provided even more benefits to the customer.

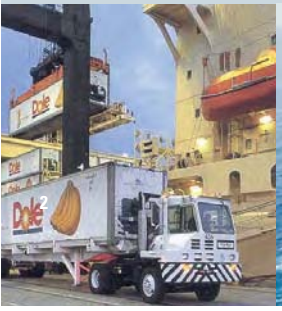

6, 8, 9,

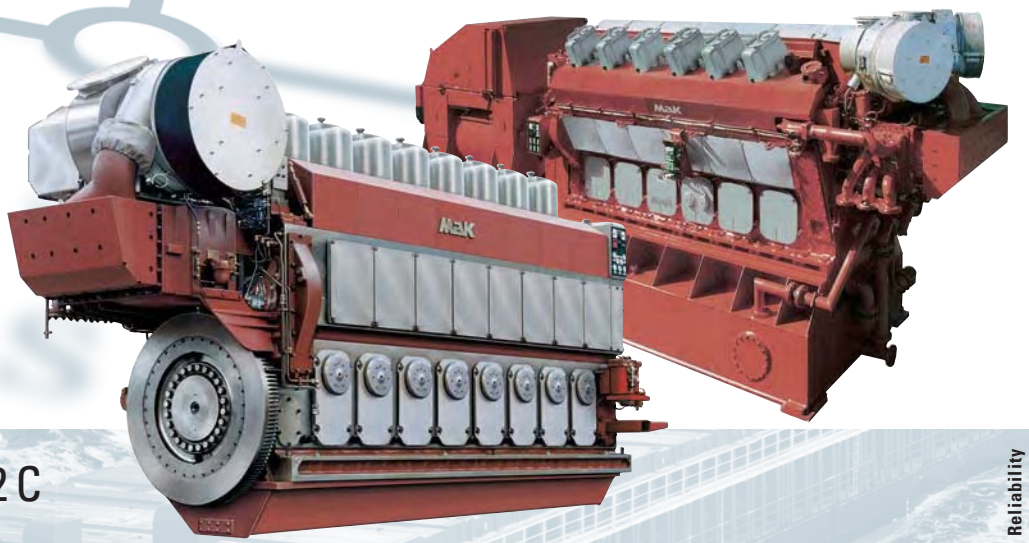

- M 32 C
- VM 32 C
- M 32 C – On-Board Power
- MaK Propulsion Packages
- Emission Reduction Technology

12, 16

M 32 C – Design Improvements

- Compact cylinder head design
- Engine control terminal
- Segmental camshaft design

Customer Benefits:

- Nodular cast-iron engine block with integrated ducts for lubricating oil and charge air
- Cooling water system with simple plug-in connections
- Simplified parts spectrum by using single-pipe exhaust gas ducting
- Pulse charging system, available as an option, for all in-line engine variants
- High-efficiency turbocharger
- Engine control terminal with analog instrumentation in robust cast casing
- Segmental camshaft design
- Compact cylinder head design
- Cylinder liner, only cooled outside the engine block
- Installation-friendly, due to pumps and filters installed on the engine
- Connecting rod, split off design
- Compact module for lower valve drives and injection pump drives with cam followers
- Emission reduction technology
- Flexible Camshaft Technology (FCT)
- Caterpillar Common Rail fuel system

9, 12, 16

M 32 C – Design Features

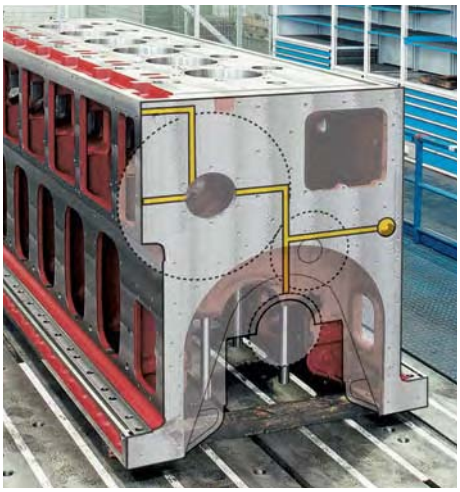

Nodular cast iron engine block and crankcase with integrated ducts for lubricating oil and charge air

- Lubricating oil supply to the crankshaft, camshaft control system and camshaft bearings through drilled ducts
- No piping
- No cooling water in the engine block
- Easy maintenance
- High level of operational safety

Simplified parts spectrum by using single-pipe exhaust gas ducting

- Identical cylinder parts
- Reduced component complexity
- Simple assembly/dismantling
- Low weight, low installation volume and low vibration level

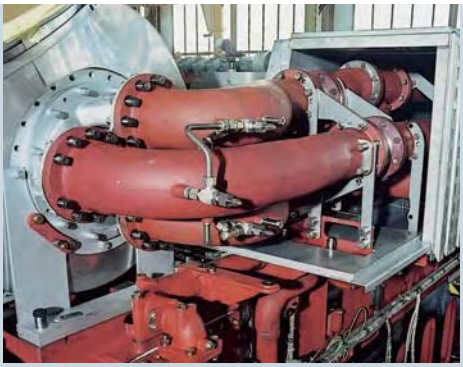

Pulse charging system, available as an option, for all in-line engine variants

- Advantages in marine propulsion systems subject to frequent changes of load
- Optimum engine acceleration without special control system arrangements

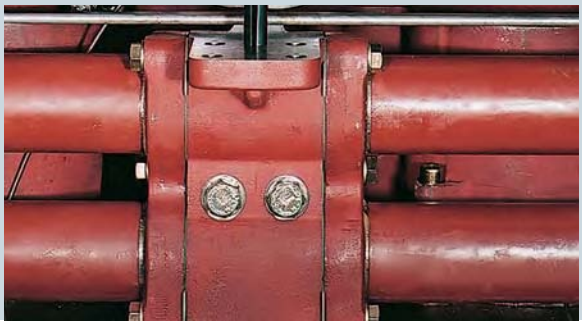

Cooling water system with simple plug-in connections

- Plug-in connections for the cooling water pipes with standard closure fittings
- Easy to fit, very maintenance-friendly
- Identical parts for each cylinder version
- Reduced number of components/parts
- Increased operational safety

M 32 C – Design Features

High-efficiency turbocharger

- Moderate temperature level of components surrounding the combustion chamber
- Corrosion-free turbocharger casing without water cooling

Cylinder liner, only cooled outside the engine block

- Low wear rate due to calibration ring
- Low and constant lubricating oil consumption
- Long life

Engine control terminal with analog instrumentation in robust cast casing

- Securely mounted with vibration damping on the crankcase
- Direct and reliable display of all operating media pressures by robust pressure gauges
- Engine and turbocharger speed display by vibration-protected analog instruments

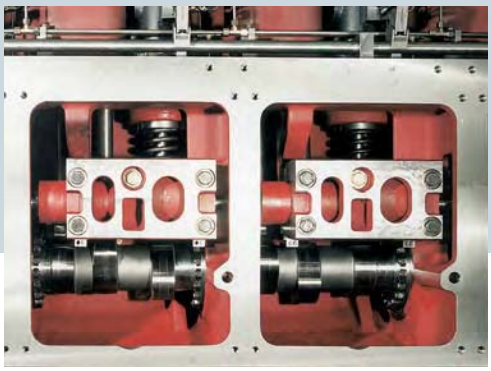

Segmental camshaft design

- Individual segments per cylinder
- Simple to assemble and dismantle

M 32 C – Design Features

Installation-friendly, because of pumps and filters installed on the engine

- Lubricating oil automatic filter fitted to the engine
- Replaces duplex filter and separate automatic filters
- Pumps and filters operate without any external power
- Reduces the parts requirements

Connecting rod, split off design

- High level of operational safety, the result of accurately preloaded bolts

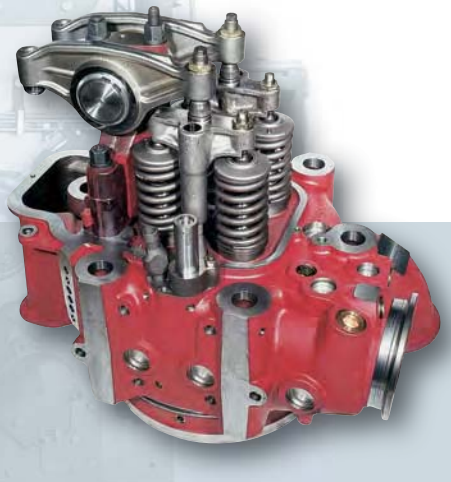

Compact module for lower valve drives and injection pump drives with cam followers

- Exact straight-line guidance for low-friction and low-wear operation

Compact cylinder head design

- Long intervals between overhauls
- Simple and fast assembly/ dismantling because of:
  – plug-in connections
  – integrated bores
  – self-centering

M 32 C – On-Board Electricity

M 32 C as a generator drive
The M 32 C was introduced in 1994 in 6, 8 and 9 cylinder versions and is outstandingly suitable as generator prime mover for electric power on ships. The robust design and moderate speed permits unlimited, continuous operation with heavy fuel oil. In-line engines – complete with generators – are mounted on a common base frame. Engine and electrics are tested prior to delivery. This ensures trouble-free installation and commissioning.

Economical operation with diesel-electric propulsion
Our engineers have extensive experience in the design of diesel-electric installations. This includes both pod propulsion systems and propulsion by fixed-pitch propellers driven by electric motors. The combination of up-to-date engine technology at the primary end of the propulsion train, and up-to-date diesel-electric technology at the secondary end, ensures low operation costs and better space utilization, which in turn means improved economy overall.

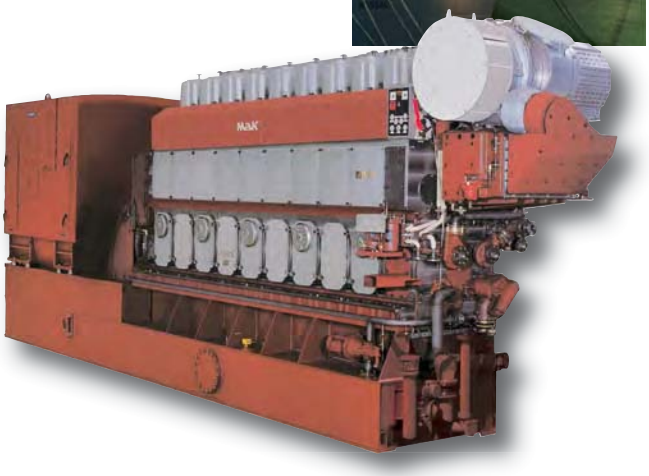

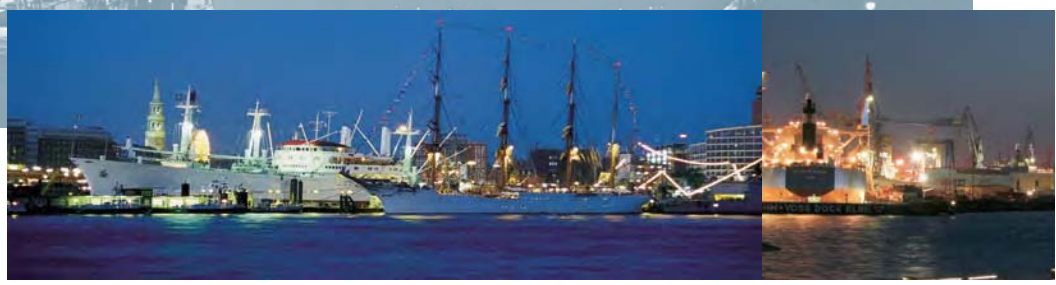

VM 32 C – Compact and Powerful!

The M 32 C V-engine was introduced in 2000 in 12- and 16-cylinder versions. With a bore of 320 mm and a stroke of 420 mm, it covers a power range of 5,760 – 8,000 kW in the 720 and 750 rpm ranges. The engine is designed to meet not only the demands of the marine market but also those of the stationary electric power generation and petroleum industry markets.

The consistent application of MaK long-stroke engine design and development, along with the incorporation of as many in-line engine components as possible, is clearly and impressively demonstrated in the external configuration: – a compact, simple and clean design.

The modular construction of the engine, the integration of various functions into a single component, the robust design and the utilization of already proven, in-line engine components, form the basis for the wide availability range of this engine.

Reliable heavy fuel oil operation, low fuel and lubricating oil consumption, together with easy maintenance and long maintenance intervals, mean outstanding economical operation.

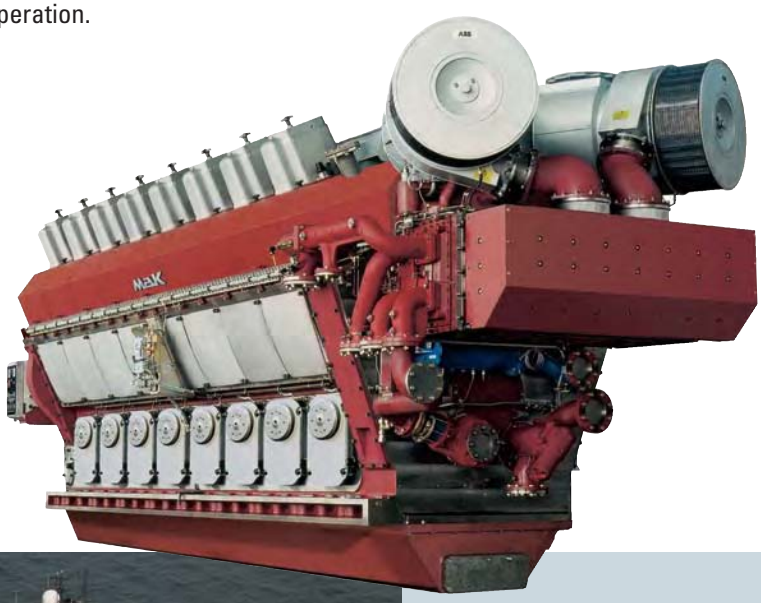

M 32 C – Economical from Installation to Operation

	TBO x 1000 h	Lifetime x 1000 h
Piston crown	30	90
Piston skirt	-	60
Piston rings	-	30
Cylinder liner	-	60 / 90*
Cylinder head	15	-
Inlet valve	15	30
Exhaust valve	15	30
Nozzle element	-	7,5
Pump element	-	15 / 20*
Main bearing	-	30
Big-end bearing	-	30

*MDO Operation

The above-mentioned data are not binding. They only serve as standard values. These standard values can be attained if the MaK operating and maintenance specifications are strictly observed and only MaK spare parts are used. Please consider as well the negative effect of bad fuel qualities.

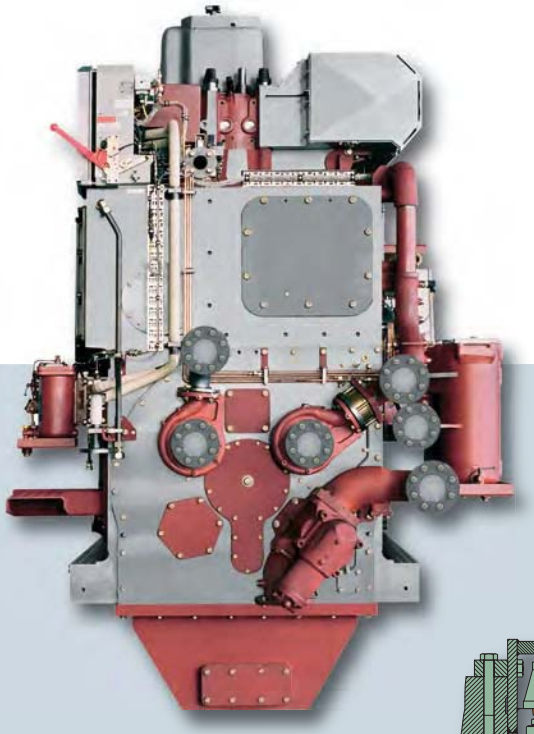

HFO/MDO
Anticipated TBO and life
Long maintenance intervals and extended life form the basis for low operating costs.

Complete engine
The engine is marketed with standardized pump and filter equipment. The interfaces for the fuel, lubricating oil and cooling water systems are located at the free end of the engine for ease of connection.

Lubricating oil system
Optional deep oil pan (wet sump).

Resilient foundation
The resilient foundation system can be assembled safely, simply and cheaply and ensures the damping of vibration and structure-borne noise.

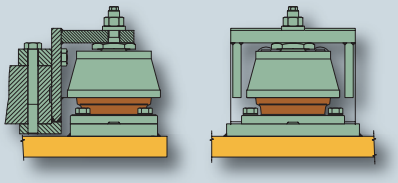

M 32 C – MaK Propulsion Package

Complete propulsion systems
The supply of complete propulsion systems is a market requirement which is becoming increasingly important. We have comprehensive experience through many completed installations and as a result or our close cooperation with competent partners.

We offer:
- System responsibility and supply – all from a single source
- Accurately matched interfaces
- Coordinated delivery date control

A complete propulsion system usually consists of:
- MaK main propulsion engine with flexible coupling
- Reduction gearbox with or without installed clutch and gearbox PTO with shaft generator
- Propeller and shaft installation
- Matched remote control and monitoring equipment

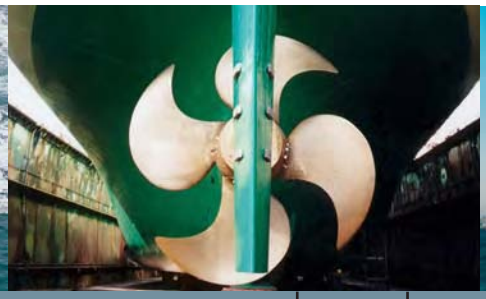

Engine							Gear	Shaft		Propeller		
Type	Rating	Speed										Speed
	kW	rpm	A	B	C	D	E	F	G	H	Ø	rpm
6 M 32 C	3000	600	5931	2369	1387	3258	1795	1600	3400	630	3500	195
8 M 32 C	4000	600	7135	2180	1387	3319	1795	2500	3500	735	4000	175
9 M 32 C	4500	600	7827	2180	1387	3513	2140	2400	3600	795	4200	170
12 M 32 C	6000	720/750	6963	2985	1205	3395	2140	5000	5000	867	4650	155
16 M 32 C	8000	720/750	8313	2985	1205	3351	2140	5000	5000	978	5050	157

Subject to be changed

Examples of complete propulsion systems

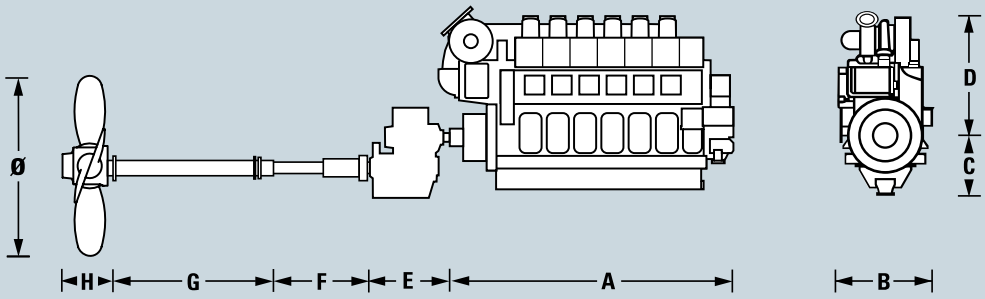

M 32 C – Emission Reduction Technology

Flex Cam Technology (FCT) has been developed and put into production. The next milestone in emissions technology is a fully flexible fuel system suitable for DO, MDO and HFO, called the Caterpillar Common Rail (CCR) fuel system. Caterpillar Common Rail is considered the major building block towards low emissions, high performance and highest customer value. Caterpillar has chosen "inside the engine" measures as the technology with the highest customer value.

High Pressure Pump

In combination with the long-stroke concept and high performance air systems the Caterpillar Common Rail (CCR) fuel system is the most effective technology to meet emission regulations and customer expectations

With **Caterpillar Common Rail**, the injection pressure is independent from load and speed. Utilizing injection maps the injection characteristics are optimized for every engine operating point. As a result, NO_x and soot emissions are reduced with the amount of reduction dependent on the actual engine operating condition.

For areas that are especially emissions-sensitive, soot emissions at low engine load remain well below the visibility limit. Furthermore, during normal load operation NO_x emissions can be reduced without sacrificing fuel consumption. In general, the Caterpillar Common Rail fuel system enables vessel operation without visible soot throughout the whole operating range.

Key criteria are:

- Compliance with current and future required emission limits for the respective power ranges.
- Customer expectations in terms of engine performance, maintenance practices, fuel quality and mode of operation.

By adopting well proven elements of this technology for medium-speed engines, it is our goal to meet and exceed customer expectations by maximizing product value through:

- Superior reliability in heavy fuel operation.
- Best fuel efficiency in its class.
- Lowest engine emissions with minimum additional complexity.

Control Device ADEM4

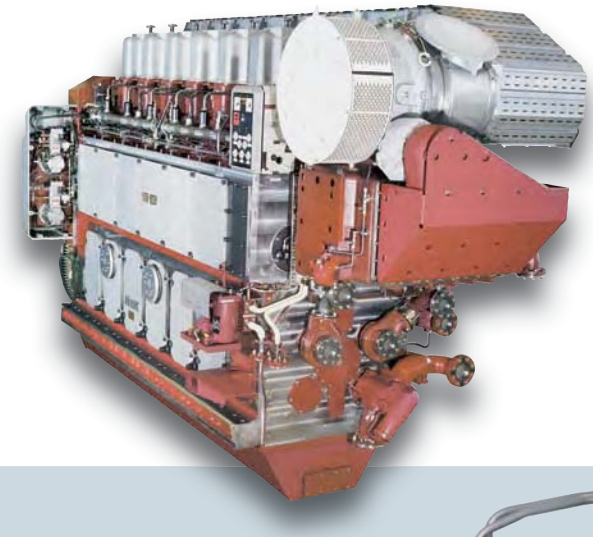

Rail Segment with Three Injectors

Injector

M 32 C – Technical Data • IN-LINE ENGINE

PROPULSION + GENERATOR SETS

Number of cylinders	In-line	6, 8, 9		6, 8, 9	
Bore	mm	320		320	
Stroke	mm	480		480	
Cylinder rating	kW	480		500	
Rated speed	rpm	600		600	
Mean piston speed	m/s	9.6		9.6	
Mean effective pressure	bar	24.9		25.9	
Cylinder pressure	bar	190		198	
Engine power		**kW**		**kW**	
	6 M 32 C	2880		3000	
	8 M 32 C	3840		4000	
	9 M 32 C	4320		4500	
		60Hz/50Hz		**60Hz/50Hz**	
Generator power*		**kWe**	**kVA**	**kWe**	**kVA**
	6 M 32 C	2765	3456	2880	3600
	8 M 32 C	3686	4608	3840	4800
	9 M 32 C	4147	5184	4320	5400
Specific fuel consumption at 100% power**		**g/kWh**		**g/kWh**	
	6 M 32 C	179		179	
	8, 9 M 32 C	178		178	
Specific lubricating oil consumption		0.6 g/kWh, ± 0.3 g/kWh			

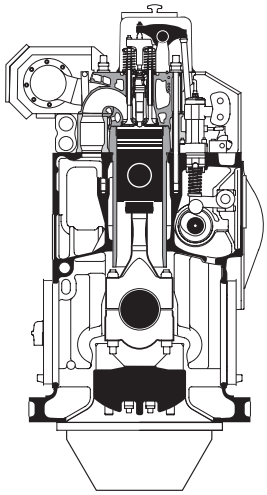

* Generator efficiency: 0.96, cos φ: 0.8 ** ISO conditions Hu = 42,700 kJ/kg, without installed pumps, tolerance 5%

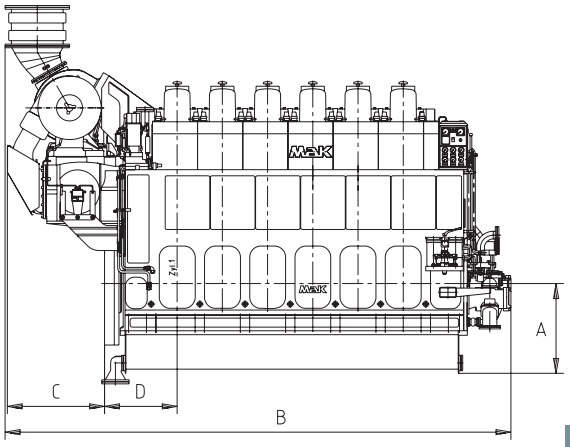

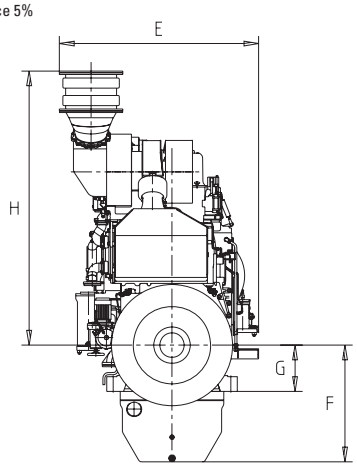

■ M 32 C In-Line Propulsion

Propulsion Engine (Dimensions in mm)									
Engine	A	B	C	D	E	F	G	H	t
6 M 32 C	1052	5931	1140	852	2369	1387	550	3258	37.5
8 M 32 C	1052	7135	1279	852	2180	1387	550	3319	46.4
9 M 32 C	1052	7827	1279	852	2180	1387	550	3513	49.4

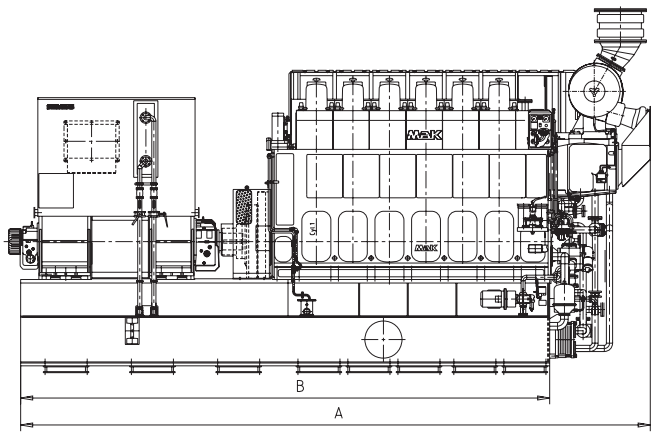

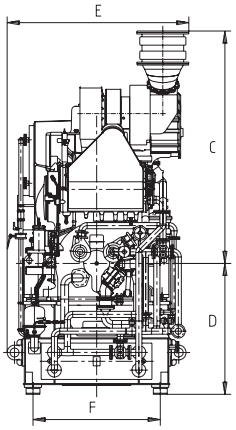

■ M 32 C In-Line Generator Set

Generator Set, Complete (Dimensions in mm)							
Engine	A	B	C	D	E	F	t
6 M 32 C	9128	7670	3375	1900	2639	1850	51.0
8 M 32 C	10556	8915	3319	1900	2600	1850	61.0
9 M 32 C	11419	9550	3513	1900	2600	1850	64.9

M 32 C – Technical Data • V-TYPE ENGINE

PROPULSION + GENERATOR SETS

Cylinder number	V-Version	12, 16	12, 16
Bore	mm	320	320
Stroke	mm	420	420
Cylinder rating	kW	480	500
Rated speed	rpm	720	750
Mean piston speed	m/s	10.1	10.5
Mean effective pressure	bar	23.7	23.7
Cylinder pressure	bar	190	190
Engine power		**kW**	**kW**
	12 M 32 C	5760	6000
	16 M 32 C	7680	8000
		60Hz	**50Hz**
Generator power*		**kWe kVA**	**kWe kVA**
	12 M 32 C	5530 6912	5760 7200
	16 M 32 C	7373 9216	7680 9600
Specific fuel consumption at 100% power**	**12, 16 M 32 C**	**g/kWh** 178	**g/kWh** 179
Specific lubricating oil consumption		0.6 g/kWh, ± 0.3 g/kWh	

* Generator efficiency: 0.96, cos φ: 0.8 ** ISO conditions Hu = 42,700 kJ/kg, installed pumps, tolerance 5%

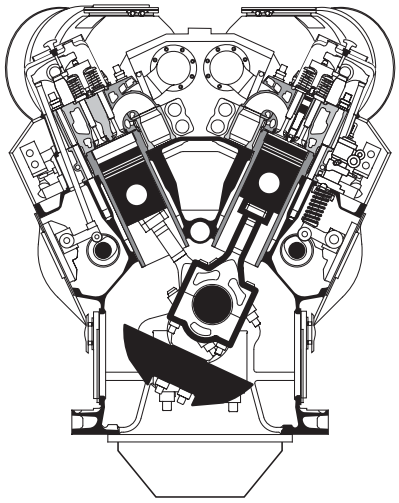

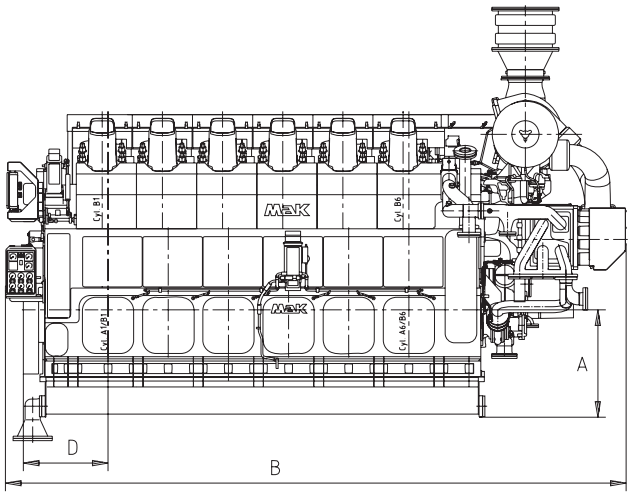

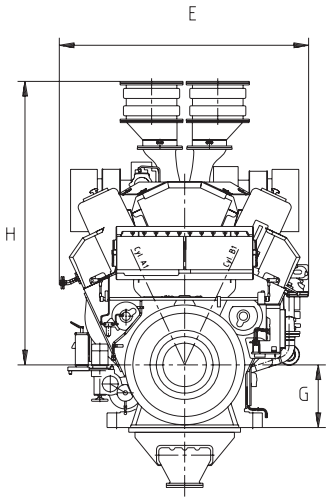

■ VM 32 C V-Type-Engine Propulsion

Propulsion Engine (Dimensions in mm)							
Engine	A	B	D	E	G	H	t
12 M 32 C	1205	6963	949	2985	750	3395	64.5
16 M 32 C	1205	8313	949	2985	750	3351	81.6

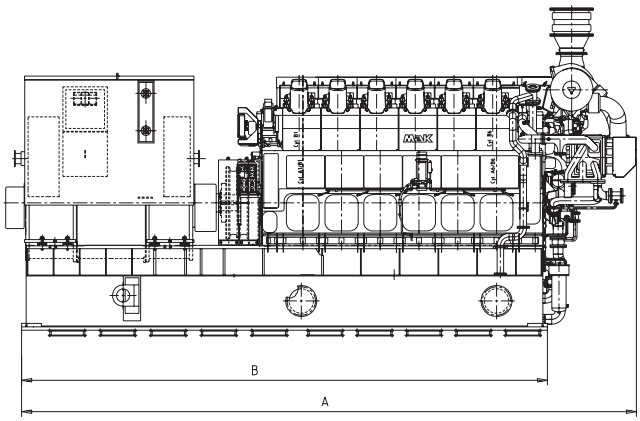

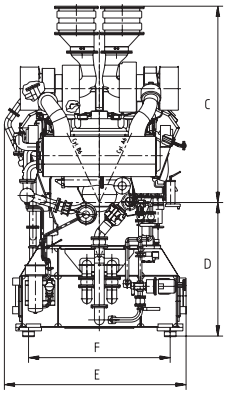

■ M 32 C V-Type Generator Set

Generator Set, Complete (Dimensions in mm)							
Engine	A	B	C	D	E	F	t
12 M 32 C	10710	9160	3395	2310	3142	2450	84.8
16 M 32 C	12060	10510	3351	2310	3000	2450	105.1

Cat Financial – World-Class Financing Solutions

You specify Cat or MaK power solutions, because you believe in the power of Caterpillar engines to keep you and your vessel safely on course. Cat Financial has the same commitment to your success – whether you need construction, term or repower financing.

We know how to support customers in one country, construction in a second country and registration in a third. We understand the marine industry – we've been lending to marine customers for more than 20 years. And, as it has been since 1986, our service commitment is powered by Caterpillar and Cat and MaK dealers everywhere.

Global Coverage

Whether you're a German operator building at a Chinese shipyard or a U.S. citizen building a yacht in Italy, Cat Financial can help. Our customers do business around the world, and we support them wherever they go.
Our service commitment extends to all marine sectors. From production and custom yachts to workboats and tankers – we have you covered.

Local Presence

Need a local expert? We know local markets and how to navigate the legal and regulatory environments.
Cat Financial has offices in the Americas, Europe and Asia, and financing representatives all over the world. Put our knowledge to work to power the deal.

Get your project moving anywhere in the world with Cat Financial – backed by the power of Caterpillar and our unmatched dealer network.

Visit us online at
www.marine.cat.com/finance

Ocean-Going Vessels

Pleasure Craft

Commercial Vessels

Integrated Solutions – Customer Support Portfolio

Providing integrated solutions for your power system means much more than just supplying your engines. Beyond complete auxiliary and propulsion power systems, we offer a broad portfolio of customer support solutions and financing options. Our global dealer network takes care of you wherever you are – worldwide. Localized dealers offer on-site technical expertise through marine specialists and an extensive inventory of all the spare parts you might need.

To find your nearest dealer, simply go to:
www.marine.cat.com

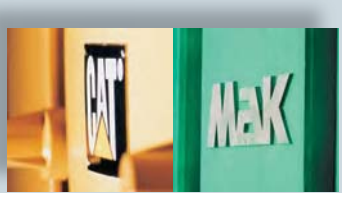

One Strong Line of World-Class Diesel Engines

Perfect Solutions for Main Propulsion and On-Board Power Supply

The Program: Quality is our Motto

For more than 80 years we have developed, built, supplied and serviced diesel engines – worldwide. Today Caterpillar Marine with its brands Cat and MaK offer high-speed and medium-speed engines with power ratings from 11 kW to 16,000 kW. Many different engine families are available to meet your specific application needs.

Cat and MaK diesel engines are distinguished by high reliability, extremely low operational costs, simple installation and maintenance and compliance with IMO environmental regulations.

The application of engines in main and auxiliary marine power systems varies greatly and extends from high-speed boats and yachts, through tugs, trawlers and offshore vessels to freighters, ferries and cruise liners.

Caterpillar Marine Power Systems

Sales and Service Organization

Caterpillar has combined the sales and service activities and responsibility of their Cat and MaK brand marine engine business into Caterpillar Marine Power Systems with headquarters in Hamburg/ Germany.

In setting-up this worldwide structure, we have concentrated on integrating the Cat and MaK brand groups into a single, united marine team, which utilises the particular expertise of each group.

Commercial marine engine business is split into three geographic regions,
– Europe, Africa, Middle East
– Americas
– Asia-Pacific,

Onboard Power Supply

C1.5
3 cylinder
10–14.5 kWe
10–18 kVA

C2.2
4 cylinder
16–30 kWe
16–37.5 kVA

C4.4
4 cylinder
36–99 kWe
45–123 kVA

C9
6 cylinder
142–250 kWe
178–313 kVA

C18
6 cylinder
275–550 kWe
344–688 kVA

3400
6, 12 cylinder
200–590 kWe
250–738 kVA

3500
8, 12, 16 cylinder
590–1,825 kWe
738–2,281 kVA

C280
6, 8, 12, 16 cylinder
1,650–5,200 kWe
2,063–6,500 kVA

GENSETS

3056
6 cylinder
93–153 kW

C7
6 cylinder
187–339 kW

C9
6 cylinder
375–423 kW

C12
6 cylinder
254–526 kW

C15
6 cylinder
597–636 kW

C18
6 cylinder
339–747 kW

C32
12 cylinder
492–1,342 kW

Medium-Speed Engines

C280
6, 8, 12, 16 cylinder
1,730–5,420 kW

M 20 C
6, 8, 9 cylinder
1,020–1,710 kW

M 25 C
6, 8, 9 cylinder
1,800–3,000 kW

MAIN PROPULSION

Production Facilities

which manage all sales and product support activities. They have direct responsibility for achieving the ambitious growth targets set for the Cat and MaK brands and for providing our customers and dealers with complete marine solutions.

Caterpillar's global dealer network provides a key competitive edge – customers deal with people they know and trust.

Cat dealers strive to form a strong working relationship with their customers, offering comprehensive and competent advice from project support to repair work.

Some of the most advanced manufacturing concepts are used at Caterpillar locations throughout the world to produce engines in which reliability, economy and performance are second-to-none.

From the production of core components to the assembly of complete engines, quality is always the top priority.

Comprehensive, recognized analysis systems, test procedures and measuring methods ensure that quality requirements are met throughout all the individual manufacturing phases. All of our production facilities are certified under 1:2000 ISO 9001 EN, the international benchmark that is helping to set new quality standards worldwide.

In addition to product quality, our customers expect comprehensive service which includes the supply of spare parts throughout the life of the engine.

Caterpillar Logistics Services, Inc., located in Morton, Illinois, is the largest parts distribution facility within the Cat Logistics network and is also the headquarters for all the worldwide distribution centres. Morton utilises sophisticated material handling, storage and retrieval systems to support Caterpillar's customer service goals.

● **M 20 C**
6, 8, 9 cylinder
970–1,625 kWe
1,210–2,030 kVA

● **M 25 C**
6, 8, 9 cylinder
1,710–2,850 kWe
2,140–3,560 kVA

● **M 32 C**
6, 8, 9 cylinder
2,765–4,320 kWe
3,456–5,400 kVA

● **VM 32 C**
12, 16 cylinder
5,530–7,680 kWe
6,912–9,600 kVA

● **3500**
8, 12, 16 cylinder
526–2,525 kW

■ **High-Speed Engines**

Propulsion Engines

● **M 32 C**
6, 8, 9 cylinder
2,880 – 4,500 kW

● **VM 32 C**
12, 16 cylinder
5,760 – 8,000 kW

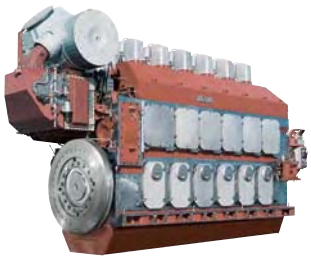

● **M 43 C**
6, 7, 8, 9 cylinder
5,400 – 9,000 kW

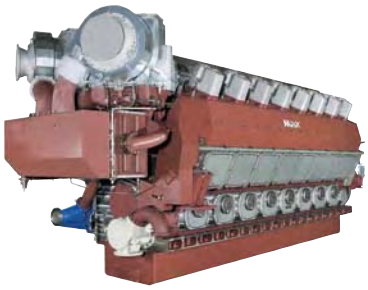

● **VM 43 C**
12, 16 cylinder
10,800 – 16,000 kW

Caterpillar Marine Power Systems

Headquarters

Caterpillar Marine Power Systems
Neumühlen 9
22763 Hamburg/Germany

Phone: +49 40 2380-3000
Telefax: +49 40 2380-3535

Europe, Africa, Middle East

Caterpillar Marine Power Systems
Neumühlen 9
22763 Hamburg/Germany

Phone: +49 40 2380-3000
Telefax: +49 40 2380-3535

Americas

MaK Americas Inc.

3450 Executive Way
Miramar Park of Commerce
Miramar, FL. 33025/USA
Phone: +1 954 447 71 00
Telefax: +1 954 447 71 15

Asia Pacific

Caterpillar Marine Trading (Shanghai) Co., Ltd.
25/F, Caterpillar Marine Center
1319, Yan'an West Road
200050 Shanghai/P. R. China
Phone: +86 21 6226 2200
Telefax: +86 21 6226 4500

Caterpillar Marine Asia Pacific Pte Ltd
14 Tractor Road
Singapore 627973/
Singapore
Phone: +65 68287-600
Telefax: +65 68287-624

For more information please visit our website:
www.marine.cat.com

Subject to change without notice.
Leaflet No. 231 · 09.08 · e · L+S · VM3

© 2008 Caterpillar All Rights Reserved. CAT, CATERPILLAR, their respective logos, „Caterpillar Yellow" and the POWER EDGE trade dress, as well as corporate identity used herein, are trademarks of Caterpillar and may not be used without permission

AIR SCIENCES INC.

CALCULATIONS

PROJECT TITLE: Shell Kulluk	**BY:** D. Young
PROJECT NO: 180-15	PAGE 1 OF 1
	SHEET 6
SUBJECT: List of Emission Factors (Yr 2007)	**DATE:** 12/22/2006

List of Emission Factors (Yr 2007)

Emissions Unit	Emission Factors							Reference
	EF Unit	NOx	CO	PM10	VOC	SO2 value x S	SO2^ 0.19 = S	
Air compressors	lb/hp-hr	0.00658	0.00575	0.000329	0.00658	0.0015371	0.00809 S	Tier 3, (planned). 225 to 450kw range. 500hp = 373kW: NOx & VOC use NOX+NMHC value, CO, & PM. AP42: SO2.
Boiler <100 mmBtu AP42	lb/mmBtu	0.143	0.0357	0.0236	0.00397	0.02736	*0.144 S*	AP42 Tbl 1.3-1: NOx, CO, & SO2, Tbls 1.3-1 & 1.3-2; PM, and Tbl 1.2-3; VOC. 9/98
ICE <=600 hp AP42	lb/hp-hr	0.031	0.00668	0.0022	0.00251	0.0015371	0.00809 S	AP42 Tbl 3.3-1, 10/96
ICE >600 hp AP42	lb/hp-hr	0.024	0.0055	0.000401	0.000705	0.0015371	0.00809 S	AP42 Tbls 3.4-1 & 3.4-2 10/96
ICE Tor Viking 6M	lb/hp-hr	0.0046	0.004785	0.000401	0.000705	0.0015371	0.00809 S	Test of MaK 6M32: NOx; CO uses AP42 with CE^^. AP42 remainder.
ICE Tor Viking 8M	lb/hp-hr	0.00568	0.004785	0.000401	0.000705	0.0015371	0.00809 S	Test of MaK 8M32: NOx; CO uses AP42 with CE^^. AP42 remainder.
ICE Tor Viking Cat 3412	lb/hp-hr	0.00362	0.004785	0.000401	0.000705	0.0015371	0.00809 S	Test of Cat 3412: NOx; CO uses AP42 with CE^^. AP42 remainder.
Kulluk main engines (adj.)	lb/hp-hr	0.016	0.0024	0.000705	0.000485	0.0015371	0.00809 S	Spec for CBO Injectors, adjusted by 1.2: NOx, CO, PM, & VOC. AP42: SO2.
Kvic. 34' vessel engine	lb/hp-hr	0.01024	0.000171	0.000169	0.000342	0.0015371	0.00809 S	Cummins data: NOx, CO, PM10, & VOC. AP42: SO2.
Not Applicable		0	0	0	0	0		
OSRV generator	lb/hp-hr	0.0151	0.0187	0.00089	0.00214	0.0015371	0.00809 S	Tier 1 2000-2005 (vendor Cat data): NOx, CO, PM10, & VOC. AP42: SO2.
OSRV main engine	lb/hp-hr	0.0146	0.0012	0.00028	0.00163	0.0015371	0.00809 S	Client provided Cat data: NOx, CO, PM10, & VOC. AP42: SO2.
Shipboard incinerator. AP42	lb/ton	3	300	35	100	2.5		AP42 Tbl 2.1-12, Industrial/commercial and Domestic single chamber (largest factor of four) 10/96.

^ SO2 emission factor is based on S; the percent sulfur by weight in the fuel. For example the value of S would be 0.5 if the sulfur content is 0.5%. AP42 Tbl 3.4-1, 10/96

Sulfur in fuel by wgt. 1900 ppm is 0.19 % S

^^ CO CE (control efficiency): 87% CO control (% reduction) on Viking class (lowest of two).

Tor Viking II Engines Emission Factors

ABB

ME, Christer André

2000-02-25

Report No. M1898004 / 00-02

Emission measurements on board MV Tor Viking II - Havyard Leirvik NB 282.

Summary

The vessel is fitted with catalytic exhaust emission control, (ABB SCR Converter System) on all main- and auxiliary engines with following configuration:

Engine No	Engine Type	Location
ME 1	MaK 6M32	Starboard outer
ME 2	MaK 8M32	Starboard inner
ME 3	MaK 8M32	Port inner
ME 4	MaK 6M32	Port outer
AE 1	Caterpillar 3412	Starboard
AE 2	Caterpillar 3412	Port

The system consist of a SCR (Selective Catalytic Reduction) stage for NO_x reduction, and an Oxidation stage for reduction of un-completely burned fuel species such as CO, HC and Soot. The SCR stage use Urea as reagent.

The contractor carried out emission measurement during commissioning period at shiyard (2000-02-10) and at sea trials (2000-02-18). A summary of the results is presented in the table below.

Chemical species	Sort	ME 1 & 4	ME 2 & 3	AE	Comment
NO_x after SCR	g/kWh	1,2	1,8	1,4	Minimum
Reduction of CO	%	35	36	89	See comment below
Ammonium slip	ppm	< 2	< 2	< 2	
Urea consumption	l/h	29	40	5,4	At 3,0 g/kWh NO_x emission

Comments:

1. This summary shows minimum measured NO_x level after SCR. During commissioning the plant was finaly adjusted according detailed tables below. It is possible to adjust the plant to achive NO_x reduction down to above minimum values.
2. CO reduction for main engines is low due to very low CO content before SCR. Compare wit AE values.
3. Exhaust temperature from main engines are very low and close to lower limit for urea injection. This means risk for HC accumulation which may lead to rising pressure drop and loss of efficiency of the installation.
4. Ammonium slip was below detection limit, 2 ppm.

Instrumentation

Portable exhaust emission analysers were used according to specification below. The instruments were calibrated with span gas before the measurements started. Zero calibration was carried out between every measuring cycle.

Make	Type	Parameters	Range	Accuracy	Method
ECOM	KD	O_2	0-21 %	± 0,1%	Electrochemical
		CO	0-4000 ppm	± 16 ppm	Electrochemical
		NO	0-2000 ppm	± 8 ppm	Electrochemical
		NO_2	0-200 ppm	± 10 ppm	Electrochemical
		Soot	0-10 Bacharach	± 0,5	Visual
Testo	300M	O_2	0-21 %	± 0,2 %	Electrochemical
		CO	0-3000 ppm	± 20 ppm	Electrochemical
		NO	0-3000 ppm	-100 ppm: ± 5ppm -2000 ppm: ± 5 %	Electrochemical
Dräger	accuro	NH_3	2-30 ppm	± 15%	Chemical / Visual

Results for the Main Engine SCR Converter System

Detailed measurements were carried out for one of the main engine of each type. Check values from the other engines showed similar results.

Date for tests	2000-02-18				
Ship	Kvaerner Leirvik, NB 282				
Fuel	Gas Oil, 0,1% Sulphur				
		ME 1	**ME 2**	**ME 3**	**ME 4**
Load	%	84	83	80	82
Speed	rpm	600	600	600	600
Diff. Pressure	kPa	0,6	0,5	0,5	0,4
Measured emissions					
	Before SCR				
NO_X	ppm	795	812	831	881
CO	ppm	44	48	49	43
Exhaust temp	°C	268	274	281	290
	After SCR				
NO_X	ppm	244	210	255	239
CO	ppm	28	31	31	29
Ammonia slip	ppm	< 2	< 2	< 2	< 2
Exhaust temp	°C	264	268	262	268
Urea flow, 40%	l/h	28,0	38,5	42,0	30,5
Calculated emissions					
Adjusted values NO_X	g / kWh	2,8	3,1	3,8	2,8
Minimum values NO_X	g / kWh	1,2	1,8	1,8	1,2
CO reduction	%	36	35	37	33

Results for the Auxiliary Engine SCR Converter System

Detailed measurements were carried out for one of the auxiliary engines only. Check values from the other engine showed similar results.

Date for tests	2000-02-10		
Ship	Kvaerner Leirvik, NB 282		
Fuel	Gas Oil, 0,1% Sulphur		
		AE 1	**AE 2**
Load	%	75	75
Speed	rpm	1500	1500
Diff. Pressure	kPa	0,6	0,5
Measured emissions			
	Before SCR		
NO_X	ppm	1502	1320
CO	ppm	266	392
Exhaust temp	°C	366	364
	After SCR		
NO_X	ppm	250	230
CO	ppm	35	36
Ammonia slip	ppm	< 2	< 2
Exhaust temp	°C	365	348
Urea flow, 40%	l/h	5,5	5,3
Calculated emissions			
Adjusted values NO_X	g / kWh	2,3	2,1
Minimum values NO_X	g / kWh	1,4	1,4
CO reduction	%	87	91

/end of document

ABB SCR Converter™ System

Test protocol

Yard Kvaerner Leirvik
NB 282
Name Tor Viking
Owner B&N Viking AS

ABB project no M1898004

		ME 1	ME 2	ME 3	ME 4	AE 1	AE 2
Type of engine		MaK 6M32	MaK 8M32	MaK 8M32	MaK 6M32	Caterpillar 3412	Caterpillar 3412
Power at 100% MCR	kW	2 880	3 840	3 840	2 880	430	430
Engine load	%	84	83	80	82	75	75
NO_x before converter	ppm	795	812	831	881	1502	1320
NO_x after converter	ppm	244	210	255	239	250	230
Urea consumption	l / h	28	38,5	42	30,5	5,5	5,3
CO before converter	ppm	44	48	49	43	266	392
CO after converter	ppm	28	31	31	29	35	36
Ammonium slip actual	ppm	0	0	0	0	0	0
Test date		00-02-18	00-02-18	00-02-18	00-02-18	00-02-18	00-02-18
Owner / Shipyard representative		[illegible]	[illegible]	[illegible]	[illegible]	[illegible]	[illegible]
ABB representative		Chris Andri	Chris Andri	Chris Andri	Chris Andri	Chris Andri	Chris Andri
MaK representative		J. Cordsen	J. Cordsen	J. Cordsen	J. Cordsen		

Restricted use- this document may not be reproduced, transferred to third party or used unauthorized in any manner. Failure to comply with these restrictions will render prosecution to prevailing law. Asea Brown Bowery.

Air Sciences Inc.	PROJECT TITLE: OCS - Beaufort Sea	BY: D. Young
	PROJECT NO: 180-15	PAGE 1 OF 2
		SHEET 0
CALCULATIONS	SUBJECT: Tor Viking II	DATE: 10/18/2006

Review emissions control for CO and NOx, and calculate NOx emission factors ("EF")

Main Engines ("ME") Emissions Reduction

	Referance
SCR for NOx control	(1)
Oxidation Catalyst for CO, HC and soot control.	(1)

NOx - PPM

	ME1	ME4	ME2	ME3	
Engine	MaK 6M32	MaK 6M32	MaK 8M32	MaK 8M32	(1)
Before - Control	795	881	812	831	(1)
After - Control	244	239	210	255	(1)
NOx Reduction (%)	69%	73%	74%	69%	

CO - PPM

	ME1	ME4	ME2	ME3	
Before - Control	44	43	48	49	(1)
After - Control	28	29	31	31	(1)
CO Reduction (%)	36%	33%	35%	37%	

NOx Emissions post control

	ME1	ME4	ME2	ME3	
g/kwh	2.8	2.8	3.1	3.8	(1) "Adjusted values"
lb/kwh	0.00617	0.00617	0.00683	0.00838	(2)
lb/hp-h	0.0046	0.0046	0.0051	0.00625	(3)
EF lb/hp-h	*0.00460*	*0.00460*	*0.00510*	*0.00625*	*Round to* 5
EF to g/kwh	2.8	2.8	3.1	3.8	
Delta %	-0.07%	-0.07%	0.07%	0.05%	To use EF the Delta ≤ ±0.25%.

NOx Emissions pre-control

	ME1	ME4	ME2	ME3	
EF lb/hp-h	0.00460	0.00460	0.00510	0.00625	From above calculation.
NOx Reduction %	69%	73%	74%	69%	From above calculation
EF lb/hp-h (pre-SCR)	0.015	0.017	0.020	0.020	

Referance(s)

(1) ABB Feb 25 2000, emissions test summary report. Commreport282.pdf

(2) 453.6 g/lb

(3) 1.341 hp/kw

Air Sciences Inc.	PROJECT TITLE: OCS - Beaufort Sea	BY: D. Young
	PROJECT NO: 180-15	PAGE 2 OF 2
		SHEET 0
CALCULATIONS	SUBJECT: Tor Viking II	DATE: 10/18/2006

Auxiliary Engines ("AE") Emissions Reduction

			Referance
SCR for NOx control			(1)
Oxidation Catalyst for CO, HC and soot control.			(1)

NOx - PPM	AE1	AE2	
Engine	Cat 3412	Cat 3412	(1)
Before - Control	1502	1320	(1)
After - Control	250	230	(1)
Reduction (%)	83%	83%	

CO - PPM	AE1	AE2	
Before - Control	266	392	(1)
After - Control	35	36	(1)
Reduction (%)	87%	91%	

NOx Emissions post control

	AE1	AE2	
g/kwh	2.3	2.1	(1) "Adjusted values"
lb/kwh	0.00507	0.00463	(2)
lb/hp-h	0.00378	0.00345	(3)
EF lb/hp-h	*0.00378*	*0.00345*	*Round to* 5
EF to g/kwh	2.3	2.1	
Delta %	-0.03%	-0.07%	To use EF the Delta ≤ ±0.25%.

NOx Emissions pre-control

	AE1	AE2	
EF lb/hp-h	0.00378	0.00345	From above calculation.
NOx Reduction %	83%	83%	From above calculation
EF lb/hp-h (pre-SCR)	0.023	0.020	

Shell Gulf of Mexico Inc.
3601 C Street, Suite 1000
Anchorage, AK 99503

Shell Chukchi OCS Air Permit
EPA Region 10
1200 6th Ave. Ste. 900, AWT-107
Seattle, WA 98101

October 8, 2009

Re: Shell Gulf of Mexico Inc. September 17, 2009 Comments on the August 2009 Proposed Discoverer / Chukchi OCS/PSD Permit to Construct

Dear EPA,

Shell Gulf of Mexico Inc. (Shell) submitted comments regarding the proposed Discoverer permit to EPA R10 on September 17, 2009, and within the cover letter committed to provide specific language incorporating the permit changes set forth in the comments into the proposed permit. That proposed language is hereby provided within the attachment to this letter, in track changes mode. With each specific change in the language of the proposed permit (other than purely editorial changes), there is a reference to the particular comment of the September 17, 2009 letter. Please be advised that the attached document does not contain any changes that were not referenced in the September 17, 2009 submittal with the exception of these editorial changes, which we assume to be self-evident, administrative changes.

We remain available to EPA to discuss or clarify any of these comments.

Sincerely,

Susan Childs

Attachment

cc: *Lance Tolson*
Keith Craik
Nicole St Amand
Rick Fox
Mark Schindler – Octane LLC.
Rodger Steen – Air Sciences Inc.
Eric Hansen – Environ International
Jeffrey Walker - Minerals Management Service

UNITED STATES ENVIRONMENTAL PROTECTION AGENCY
REGION 10
1200 Sixth Avenue, Suite 900
Seattle, Washington 98101-3140

OUTER CONTINENTAL SHELF
PREVENTION OF SIGNIFICANT DETERIORATION
PERMIT TO CONSTRUCT

Permit Number: R10OCS/PSD-AK-09-01 Issuance Date: *Draft - TBD*
Effective Date: *Draft - TBD*

In accordance with the provisions of Clean Air Act (CAA) Section 328 and Code of Federal Regulations (CFR) Title 40, Part 55, and the provisions of Part C to Title I of the CAA and 40 CFR § 52.21,

Shell Gulf of Mexico Inc.
3601 C Street, Suite 1000
Anchorage, AK 99503

is authorized to construct and operate the Frontier Discoverer drillship and its air emission units and to conduct other air pollutant emitting activities in accordance with the permit conditions listed in this permit, and only at the following lease blocks from the Chukchi Sea lease sale 193:

NR02-02:	6819	6820	6821	6822	6868	6869	6870	6871	6872	6918	6919	6920	6921	6922	6968	6969
	6970	6971	6972	7018	7019	7020	7021	7022	7023	7068	7069	7072				
NR03-01:	6105	6106	6155	6156	6161	6162	6211	6212	6261	6363	6364	6413	6414	6415	6418	6419
	6462	6463	6464	6465	6467	6468	6469	6512	6513	6514	6515	6516	6517	6518	6519	6562
	6563	6564	6565	6567	6568	6569	6612	6613	6614	6615	6616	6617	6618	6665	6666	6667
	6668	6705	6706	6712	6715	6716	6717	6753	6754	6755	6756	6761	6762	6765	6766	6767
	6803	6804	6805	6810	6811	6812	6813	6814	6815	6816	6817	6853	6854	6855	6860	6861
	6862	6863	6864	6865	6866	6903	6904	6905	6908	6909	6910	6911	6912	6913	6914	6915
	6916	6953	6954	6955	6956	6957	6958	6959	6960	6961	6962	6963	6964	6965	7006	7007
	7008	7009	7010	7011	7012	7013	7014	7056	7057	7058	7059	7060	7061	7062	7063	7106
	7107	7108	7109	7110	7119											
NR03-02:	6114	6115	6161	6163	6164	6165	6213	6214	6215	6220	6259	6261	6263	6264	6265	6270
	6271	6321	6322	6359	6360	6371	6372	6409	6410	6422	6423	6459	6508	6558	6608	6658
	6671	6672	6708	6713	6714	6715	6721	6722	6757	6761	6762	6763	6764	6765	6766	6771
	6807	6811	6812	6813	6814	6815	6816	6817	6856	6862	6863	6864	6865	6866	6905	6912
	6913	6914	6915	6916	6962	6963	6964	6965								
NR04-01:	6352	6401	6402	6452	6453	6503	6504	6554	6604							
NR03-03:	6007	6008	6009	6010	6017	6018	6020	6056	6057	6058	6059	6067	6068	6070	6108	6219
	6560	6561	6609	6610	6611	6658	6659	6660	6709	6721	6722	6723	6759	6771	6772	6773
	6823															

Terms not otherwise defined in this permit have the meaning assigned to them in the referenced statutes and regulations. All terms and conditions of the permit are enforceable by the United States Environmental Protection Agency and citizens under the Clean Air Act.

_____ _____
Richard Albright Date
Director, Office of Air, Waste and Toxics

ABBREVIATIONS AND ACRONYMS

BACT. .....Best Available Control Technology
CFR. .....Code of Federal Regulations
CO .....Carbon Monoxide
EPA .....United States Environmental Protection Agency
hp.....brake horsepower
kW.....kiloWatts (mechanical)
kWe .....kiloWatts electrical
lbs.....pounds
MMBtu/hr .....Million British thermal units per hour
NA .....Not applicable
NAAQS .....National Ambient Air Quality Standards
NH_3 .....Ammonia
NO_X .....Oxides of Nitrogen
OCS .....Outer Continental Shelf
PM.....Particulate Matter
$PM_{2.5}$ .....Particulate Matter with an aerodynamic diameter less than 2.5 microns
PM_{10} .....Particulate Matter with an aerodynamic diameter less than 10 microns
ppmv .....parts per million by volume
PSD .....Prevention of Significant Deterioration
PTE .....Potential to Emit
QA/QC .....Quality Assurance/Quality Control
SCR .....Selective catalytic reduction
SO_2 .....Sulfur Dioxide
VOC .....Volatile Organic Compound

AUTHORITY

The United States Environmental Protection Agency (EPA) is proposing to issue this outer continental shelf (OCS)/prevention of significant deterioration (PSD) permit pursuant to Section 328 of the CAA, 42 U.S.C. § 7627, and the implementing OCS regulations at 40 CFR Part 55, and pursuant to Part C to Title I of the CAA, 42 USC §§ 7470 to 7492, and the implementing PSD air quality regulations at 40 CFR § 52.21. This proposed action is based upon the application initially submitted by Shell Offshore Inc.[1] on December 19, 2008, supplemental submittals identified in the administrative record for this permit action, and upon the technical analysis performed by EPA.

FINDINGS

On the basis of the information in the administrative record, EPA has determined that:

1. The permittee will meet all of the applicable requirements of the 40 CFR Part 55;
2. The permittee will meet all of the applicable requirements of the 40 CFR § 52.21.

APPROVAL CONDITIONS

Shell Gulf of Mexico Inc. (Shell or permittee) is authorized to construct and operate the vessels and emission units listed in Tables 1 through 5, at any of the lease blocks identified on Page 1 of this permit, and consistent with the representations in the permit application and subject to the conditions in this permit.

Table 1 – Frontier Discoverer Emission Units

ID	Description	Make and Model	Rating[a]
FD-1 – 6	Generator Engines	Caterpillar D399 SCAC 1200 rpm	1,325 hp
FD-7	Propulsion Engine	Mitsubishi 6UEC65	7,200 hp
FD-8	Emergency Generator	Caterpillar 3304	131 hp
FD-9 – 11	MLC Compressor Engines	Caterpillar C-15	540 hp
FD-12 – 13	HPU Engines	Detroit 8V-71	250 hp
FD-14	Port Deck Crane Engine	Caterpillar D343	365 hp
FD-15	Starboard Deck Crane Engine	Caterpillar D343	365 hp
FD-16 – 17	Cementing Unit Engines	Detroit 8V-71N	335 hp
FD-18	Cementing Unit Engine	GM 3-71	147 hp
FD-19	Logging Winch Engine	Detroit 4-71N	128 hp
FD-20	Logging Winch Engine	John Deere 4024TF	36 kW
FD-21 – 22	Heat Boilers	Clayton 200	7.97 MMBtu/hr
FD-23	Incinerator	TeamTec GS500C	276 lb/hr
FD-24 -30	Fuel Tanks	Not applicable (NA)	Various
FD-31	Supply Ship Generator Engine(s)	Generic	584 hp

[1] Although the permit application was initially submitted by Shell Offshore Inc., the applicant has since clarified that Shell Gulf of Mexico Inc. is the only entity with rights to conduct activities under the leases and is responsible for compliance with all regulations and orders for activities on the leases. Shell Gulf of Mexico Inc. has confirmed that it stands by all statements made in the permit application. As a result, EPA is issuing the permit to Shell Gulf of Mexico Inc.

FD-32	Drilling Mud System	NA	NA
FD-33	Shallow Gas Diverter System	NA	NA

[a] Permit conditions may limit operation to less than rated capacity.

Table 2 – Icebreaker ~~#1~~

Description	Make and Model	Maximum Aggregate Rating[a]
Aggregate of Propulsion Engines and Generator Engines	Various	31,200 hp
Generator Engine(s)	Various	2,800 hp
Heat Boiler(s)	Various	10 MMBtu/hr
Incinerator	Various	154 lbs/hr

[a] Permit conditions may limit operation to less than rated capacity.

Table 3 – ~~Icebreaker #2~~Anchor Handler

Description		Make and Model	Maximum Aggregate Rating[a]
Tor-Viking			
~~Aggregate of Propulsion Engines and Generator Engines~~TV-1-2	Propulsion Engines	MaK 8M32~~Various~~	~~31,200~~5,046 hp
TV-3-4	Propulsion Engines	MaK 6M32	3,784 hp
TV-5-6~~Generator Engine(s)~~	Generator Engines	Caterpillar 3412~~Various~~	~~2,800~~1,168 hp
TV-7~~Heat Boiler(s)~~	Heat Boiler	~~Various~~	1,37~~0~~ MMBtu/hr
TV-8~~Incinerator~~	Incinerator	~~Various~~	15~~4~~1 lbs/hr
Or Hull 247			
	Maximum Power Generation	Various	24 MWe
	Heat Boiler		4 MMBtu/hr
	Incinerator	TeamTec/OGS200CSW	151 lbs/hr

[a] Permit conditions may limit operation to less than rated capacity.

(9/17/09, Issue 1.1)

Table 4 – Supply Ship

Description	Make and Model	Maximum Aggregate Rating[a]
Propulsion Engines	Various	7,200 hp
Generator Engine(s)	Various	584 hp

[a] Permit conditions may limit operation to less than rated capacity.

Table 5 – Oil Spill Response Fleet

ID	Description	Make and Model	Rating[a]
Oil Spill Response Main Ship - Nanuq			
N-1 - 2	Propulsion Engines	Caterpillar 3608	2,710 kW~~hp~~
N-3 – 4	Electrical Generators	Caterpillar 3508	1,285 hp
N-5	Emergency Generator	John Deere	166 kW
N-6	Incinerator	ASC/CP100	125 lbs/hr
Oil Spill Response Work Boat - Kvichak 34-foot No. 1			
K-1 – 2	Propulsion Engines	Cummins QSB	300 hp
K-3	Generator Engines	Various	12 hp
Oil Spill Response Work Boat - Kvichak 34-foot No. 2			
K-4 – 5	Propulsion Engines	Cummins QSB	300 hp
K-6	Generator Engines	Various	12 hp
Oil Spill Response Work Boat - Kvichak 34-foot No. 3			
K-7 - 8	Propulsion Engines	Cummins QSB	300 hp
K-9	Generator Engines	Various	12 hp

[a] Permit conditions may limit operation to less than rated capacity.

(9/17/09, Issue 1.2)

Effective Date. This permit becomes effective 30 days after the service of notice of the final permit decision, unless review of the permit decision is requested pursuant to 40 CFR § 124.19.

OCS Source. Permit Conditions contained in Sections A through R, except for those conditions addressing notification, reporting and testing, apply only during the time that the Frontier Discoverer drillship (Discoverer) is an OCS Source. Permit Conditions addressing notification, reporting and testing apply at all times as specified. For the purpose of this permit, the Discoverer is an "OCS Source" during all times between placement of the first anchor on the seabed to removal of the last anchor from the seabed at a drill site.

A. GENERALLY APPLICABLE REQUIREMENTS

1. **Construction and Operation.** The permittee shall construct and operate the OCS Source and the Associated Fleet in accordance with the application and supporting materials submitted by the permittee and in accordance with this permit. For purposes of this permit, the Icebreaker~~ #1~~, ~~Icebreaker #2~~the Anchor Handler, the supply ship, the Nanuq and Kvichaks No. 1-3 shall collectively be referred to as the "Associated Fleet."

2. **Compliance Required.** The permittee shall comply with all requirements of 40 CFR § 52.21, Part 55, and this permit. Failure to do so shall be considered a violation of Section 111(e) and 165 of the CAA. All enforcement provisions of the CAA, including but not limited to, Section 113, 114, 120, 167, 303, and 304 apply to the permittee.

3. **Compliance with Other Requirements**. This permit does not relieve the permittee of the responsibility to comply fully with applicable provisions of any other requirements under federal law.

4. **Notification to Owners, Operators, and Contractors.** The permittee must notify all other owners or operators, contractors, and the subsequent owners or operators associated with emissions from the source of the conditions of this permit.

5. **Expiration of Approval to Construct.** As provided in 40 CFR § 52.21(f)(4), this approval shall become invalid if: construction is not commenced within 18 months after the effective date of this permit, construction is discontinued for a period of 18 months, or construction is not completed within a reasonable time. EPA may extend the 18-month period upon a satisfactory showing that an extension is justified.

6. **Permit Revision, Termination and Reissuance.** This permit may be revised, terminated, or revoked and reissued by EPA for cause. Cause exists to revise, terminate, or revoke and reissue this permit under the following circumstances:

6.1 This permit contains a material mistake;

6.2 Materially inaccurate statements were made in establishing the terms or conditions of this permit;

6.3 The permittee fails to comply with any material condition of this permit; or

6.4 This permit must be revised, terminated, or revoked and reissued to assure compliance with Clean Air Act requirements.

7. **Credible Evidence.** For the purpose of establishing whether or not the permittee has violated or is in violation of any requirement of this permit, nothing in this permit shall preclude the use, including the exclusive use, of any credible evidence or information relevant to whether the permittee would have been in compliance with applicable requirements if the appropriate performance or reference test or procedure had been performed.

8. **Inspection and Entry.** Upon presentation of credentials and other documents as may be required by law, the permittee shall allow EPA or an authorized representative to perform the following:

8.1 Enter upon the Discoverer, any support vessel, any location where emissions-related activity is conducted, or any location where records must be kept under the conditions of the permit;

8.2 Have access to and copy, at reasonable times, any records that must be kept under the conditions of the permit;

8.3 Inspect at reasonable times any facilities, equipment (including monitoring and air pollution control equipment), practices, or operations regulated or required under the permit; and

8.4 As authorized by the Clean Air Act, sample or monitor at reasonable times substances or parameters for the purpose of assuring compliance with the permit or applicable requirements.

9. **Recordkeeping Requirements.** In addition to the specific recordkeeping requirements contained in the source-wide and emission unit sections of this permit, the permittee shall keep records of required monitoring information that include the following:

9.1 The date, place, and time of sampling or measurements;

9.2 The date(s) analyses were performed;

9.3 The company or entity that performed the analyses;

9.4 The analytical techniques or methods used;

9.5 The results of such analyses; and,

9.6 The operating conditions as existing at the time of sampling or measurement.

The permittee shall retain records of all required monitoring data and support information for a period of at least 5 years from the date of the monitoring sample, measurement, report, or application. Support information includes all calibration and maintenance records, all original strip-chart recordings for continuous monitoring instrumentation, and copies of all reports required by this permit.

10. **Agency Notifications.** Unless otherwise specified in this permit, any documents required to be submitted under this permit, including reports, test data, monitoring data, notifications, and applications for renewals and permit modifications shall be submitted to:

OCS/PSD Air Quality Permits
U.S. EPA - Region 10, AWT-107
1200 Sixth Avenue, Suite 900
Seattle, WA 98101
Facsimile no. 206-553-8509

11. **Certification.** Any document required to be submitted under this permit shall be certified by a responsible official, as that term is defined in 40 CFR § 71.2, of the permittee as to truth, accuracy, and completeness. Such certification shall state that based on information and belief formed after reasonable inquiry, the statements and information in the document are true, accurate and complete.

12. **Severability.** The provisions of this permit are severable, and in the event of any challenge to any portion of this permit, or if any portion is held invalid, the remaining permit conditions shall remain valid and in force.

13. **Property Rights.** This permit does not convey any property rights of any sort, or any exclusive privilege.

B. SOURCE-WIDE REQUIREMENTS

1. Drill Site Notification. At least 10 days prior to setting the first anchor from the Discoverer to the seabed at any drill site, the permittee shall notify EPA via facsimile of the following information:

1.1 The location of the proposed drill site, using coordinates in the following formats:

1.1.1 Latitude and longitude, and

1.1.2 Universal Transverse Mercator grid system.

1.2 The lease block within the Chukchi Sea lease sale 193 where the drill site is located;

1.3 The proposed date that the first Discoverer anchor will be set on the seabed and the probable duration of operation at that location;

1.4 Confirmation that emissions from the source would impact no Class I area. The confirmation shall include a description of the legal and factual basis for this determination; and

1.5 Confirmation that emissions from the source would impact no area where an applicable increment was known to be violated. The confirmation shall include a description of the legal and factual basis for this determination.

2. Duration of Exploration Operations. The permittee shall only conduct exploration drilling operations in the Chukchi Sea between July 1 and December 31 each year (referred to hereafter as the "drilling season").

2.1 During any rolling 12-month period, the permittee shall not operate the Discoverer as an OCS Source in excess of 168 calendar days. Each partial day shall be counted as a calendar day.

2.2 For each drill site at which the Discoverer operates, the permittee shall record the following:

2.2.1 The location of each drill site, using a modern global positioning system to determine the location. Location shall be recorded by providing coordinates in the following formats:

2.2.1.1 Latitude and longitude, and

2.2.1.2 Universal Transverse Mercator grid system.

2.2.2 The lease block within the Chukchi Sea lease sale 193 where the drill site is located;

2.2.3 The date and hour that the first Discoverer anchor was set on the seabed;

2.2.4 The date and hour that the last Discoverer anchor was removed from the seabed.

2.3 Any time spent drilling a relief well shall be included in the time recorded in Conditions B.2.2.3 and B.2.2.4.

3. Drilling Season Notification. Each drilling season, the permittee shall report to EPA via facsimile the information below, within 3 days of occurrence:

3.1 The date and hour that the first Discoverer anchor for that drilling season, was set on the seabed; and

3.2 The date and hour that the last Discoverer anchor for that drilling season was removed from the seabed.

4. Best Available Control Technology (BACT) for Sulfur Dioxide (SO_2) Emissions from Discoverer Emission Units. The permittee shall not combust any liquid fuel with sulfur content greater than 0.0015 percent by weight, as determined by Condition B.4.1, in any emission unit on the Discoverer (except for Unit FD-7).

4.1 Representative fuel samples shall be obtained using one of the methods in 40 CFR § 80.330(b). The sulfur content of the fuel shall be determined using ASTM D 5453-08b.

4.2 Monitoring and Recordkeeping. The permittee shall:

4.2.1 Prior to mobilizing the Discoverer for the first time at the beginning of a drilling season, determine the sulfur content in each fuel oil storage tank on the Discoverer. The permittee shall obtain a representative sample of the fuel and analyze the sample for sulfur content using the procedures in Condition B.4.1.

4.2.2 Thereafter, determine and record the sulfur content upon receiving each fuel shipment, as follows:

4.2.2.1 Obtain a representative sample of the fuel delivered and analyze the sample for sulfur content using the procedures in Condition B.4.1; or

4.2.2.2 Obtain a single certification of sulfur content for each shipment of fuel from the fuel supplier based on an analysis of the fuel, providing that the certification indicates that the sulfur content has been determined by the ASTM method listed in Condition B.4.1.

4.3 Within 3 business days of identification, report to EPA any instance of a liquid fuel with sulfur content greater than 0.0015 percent by weight being combusted in any emission unit on the Discoverer (except Unit FD-7).

5. SO_2 Emissions Limit for Associated Fleet.

5.1 The permittee shall not combust any liquid fuel with sulfur content greater than 0.19 percent by weight, as determined by Condition B.5.3, in any emission unit on the ~~Associated Fleet~~Icebreaker, the Anchor Handler and the Oil Spill Response Work Boats.

5.2 The permittee shall not combust any liquid fuel with sulfur content greater than 0.0015 percent by weight, as determined by Condition B.5.3, in any emission unit on the Oil Spill Response Main Ship - Nanuq.

(9/17/09, Issue 1.2)

~~5.1~~5.3 Representative fuel samples shall be obtained using one of the methods in 40 CFR § 80.330(b). The sulfur content of the fuel shall be determined using ASTM D 5453-08b.

~~5.2~~5.4 Monitoring and Recordkeeping. The permittee shall:

~~5.2.1~~5.4.1 Prior to mobilizing the Discoverer for the first time at the beginning of a drilling season, determine the sulfur content in each fuel oil storage tank on the vessels comprising the Associated Fleet. The permittee shall obtain a representative sample of the fuel and analyze the sample for sulfur content using the procedures in Condition B.5.~~1~~3.

~~5.2.2~~5.4.2 Thereafter, determine and record the sulfur content upon receiving each fuel shipment, as follows:

~~5.2.2.1~~5.4.2.1 Obtain a representative sample of the fuel delivered and analyze the sample for sulfur content using the procedures in Condition B.5.~~1~~3; or

~~5.2.2.2~~5.4.2.2 Obtain a single certification of sulfur content for each shipment of fuel from the fuel supplier based on an analysis of the fuel, providing that the certification indicates that the sulfur content has been determined by the ASTM method listed in Condition B.5.~~1~~3.

~~5.3~~5.5 Within 3 business days of identification, report to EPA any instance of a liquid fuel with sulfur content greater than 0.19 percent by weight being combusted in any emission unit on any vessel comprising the Associated Fleet.

6. BACT for Particulate Matter Emissions (PM, PM10, and PM2.5) from Discoverer Diesel IC Engine Crankcase Ventilation. Except for the MLC Diesel Compressor Engines (FD-9-11), each diesel IC engine on the Discoverer shall be equipped with a closed crankcase ventilation (CCV) system.

7. General Testing Requirements. Whenever conducting a stack test required by this permit, and unless specifically stated otherwise in this permit, the permittee shall comply with the following testing requirements in addition to the specific testing requirements contained in the emission unit sections of this permit:

7.1 The permittee shall provide EPA at least 30 days prior notice of any stack test. If after 30 days notice for an initially scheduled stack test, there is a delay in conducting the scheduled stack test, the permittee shall notify EPA as soon as possible of any delay in the original test date, either by providing at least 7 days prior notice of the rescheduled date of the stack test, or by arranging a rescheduled date with EPA by mutual agreement.

7.2 The permittee shall submit to EPA a source test plan 30 days prior to any required testing. The source test plan shall include and address the following elements:

7.2.1 Purpose and scope of testing;

7.2.2 Source description, including a description of the operating scenarios and mode of operation during testing and including fuel sampling and analysis procedures;

7.2.3 Schedule/dates of testing;

7.2.4 Process data to be collected during the test and reported with the results, including source-specific data identified in the emission unit sections of this permit;

7.2.5 Sampling and analysis procedures, specifically requesting approval for any proposed alternatives to the reference test methods, and addressing minimum test length (e.g., one hour, 8 hours, 24 hours, etc.) and minimum sample volume;

7.2.6 Sampling location description and compliance with the reference test methods;

7.2.7 Analysis procedures and laboratory identification;

7.2.8 Quality assurance plan;

7.2.9 Calibration procedures and frequency;

7.2.10 Sample recovery and field documentation;

7.2.11 Chain of custody procedures;

7.2.12 Quality Assurance (QA)/Quality Control (QC) project flow chart;

7.2.13 Data processing and reporting;

7.2.14 Description of data handling and QC procedures; and

7.2.15 Report content and timing.

7.3 Unless EPA determines in writing that other operating conditions are representative of normal operations or unless specified in the emission unit sections of this permit, the source shall be operated at a capacity of at least 90% but no more than 100% of maximum during all tests.

7.4 Only regular operating staff may adjust the processes or emission control devices during or within 2 hours prior to the start of a source test. Any operating adjustments made during a source test, that are a result of consultation during the tests with source testing personnel, equipment vendors, or consultants, may render the source test invalid.

7.5 For the duration of each test run (unless otherwise specified), the permittee shall record the following information:

7.5.1 All data which is required to be monitored during the test in the emission unit sections of this permit; and

7.5.2 All continuous monitoring system data which is required to be routinely monitored in the emission unit sections of this permit for the emission unit being tested.

7.6 Each source test shall follow the reference test methods specified by this permit and consist of at least three (3) valid test runs. For purposes of this permit:

7.6.1 EPA Test Methods 1, 2, 3A, 4, 5, 6C, 7E, 9, 10, 19, and 25A are set forth in 40 CFR Part 60, Appendix A;

7.6.2 EPA Test Methods 201, 201A and 202 are set forth in 40 CFR Part 51, Subpart M;

7.6.3 Conditional Test Method 027 (CTM-027), "Procedure for Collection and Analysis of Ammonia in Stationary Sources," is set forth at http://www.epa.gov/ttn/emc/ctm.html;

7.6.4 Conditional Test Method 038 (CTM-038), "Measurement of Ammonia Emissions from Highway, Nonroad, and Stationary Use Diesel Engines by Extractive Fourier Transform Infrared (FTIR) Spectroscopy," is set forth at http://www.epa.gov/ttn/emc/ctm.html;

7.6.5 Other Test Method 27 (OTM-27), "Determination of PM_{10} and $PM_{2.5}$ Emissions from Stationary Sources (Constant Sampling Rate Procedure)." is set forth at http://www.epa.gov/ttn/emc/prelim.html;

7.6.6 Other Test Method 28 (OTM-28), "Dry Impinger Method for Determining Condensable Particulate Emissions from Stationary Sources," is set forth at http://www.epa.gov/ttn/emc/prelim.html; and

7.6.7 ASTM D 5453-09 is set forth at http://www.astm.org/Standards/D5453.htm

7.7 Facilities for performing and observing the emission testing shall be provided that meet the requirements of 40 CFR § 60.8(e) and EPA Method 1.

7.8 Emission test reports shall be submitted to EPA within 45 days of completing any emission test required by this permit along with items required to be recorded in Condition B.7.5 above.

7.9 EPA Methods 1, 2, 3A, 3B, 4 and 19 shall be used as necessary to convert the measured NO_x, PM, PM_{10}, $PM_{2.5}$, and CO emissions into units of the emission limits in the permit.

7.10 Source test emission data shall be reported as the arithmetic average of all valid test runs and in the terms of any applicable emission limit, unless otherwise specified in the emission unit sections of this permit.

7.11 An alternative test method or a deviation from a test method identified in this permit may be approved as follows:

7.11.1 The permittee must submit a written request to EPA at least 60 days before the stack test is scheduled to begin which includes the reasons why the alternative or deviation is needed and the rationale and data to demonstrate that the alternative test method or deviation from the reference test method:

7.11.1.1 Provides equal or improved accuracy and precision as compared to the specified reference test method; and

7.11.1.2 Does not decrease the stringency of the standard as compared to the specified reference test method.

7.11.2 If requested by EPA, the demonstration referred to in Condition 7.11.1 must use Method 301 in 40 CFR Part 63, Appendix A, to validate the alternative test method or deviation.

7.11.3 EPA must approve the request in writing.

7.11.4 Until EPA has given written approval to use an alternative test method or to deviate from the test method specified in this permit, the permittee is required to use the test method specified in this permit when conducting a source test under this permit.

8. **Prohibited Activities.** The permittee shall not flow test wells, flare gas, or store liquid hydrocarbons recovered during well testing.

9. ~~**Monthly**~~**Weekly Emissions Calculations.** By the ~~tenth~~end of ~~each month~~the following week, the permittee shall, using monitoring data collected pursuant to the requirements of this permit, calculate and record the ~~month~~weekly emissions of ~~CO,~~ NO_x~~, $PM_{2.5}$, PM_{10}, SO_2 and VOC~~ for the preceding ~~month~~week for the Ice breaker and Anchor handler.

10. **Rolling 12-Month Emissions Calculations.** By the ~~tenth~~end of ~~each month~~the following week, the permittee shall calculate and record the rolling 12-month emissions of ~~CO,~~ NO_x~~, $PM_{2.5}$, PM_{10}, SO_2 and VOC~~ for the Ice breaker and Anchor handler by using the ~~month~~weekly emissions calculated ~~for the previous 12 months~~ pursuant to Condition B.9.

(9/17/09, Issue 4.1: A weekly NO_x emission compliance requirement is only required for the Ice breaker and Anchor handler. No monthly emissions calculations are required.)

11. **Reporting.** The permittee shall report to EPA via facsimile any exceedance of any emission limit or any throughput limit contained in this permit within 3 business days of identification.

12. **Good Operating and Maintenance Requirements.** At all times, including periods of startup, shutdown, and malfunction, the permittee shall, to the extent practicable, maintain and operate each emission unit, including any associated air pollution control equipment, in a manner consistent with good air pollution control practices for minimizing emissions. Determination of whether acceptable operating and maintenance procedures are being used will be based on information available to EPA which may include, but is not limited to, monitoring results, opacity observations, review of operating and maintenance procedures, and inspection of the source.

C. DISCOVERER GENERATOR ENGINES (FD-1 – 6)

1. Operation of Selective Catalytic Reduction (SCR) Unit. At all times that any of Units FD-1 – 6 are in operation, the exhaust from each Unit shall be directed to an operating SCR unit.

2. Operation of Oxidation Catalyst. At all times that any of Units FD-1 – 6 are in operation, the exhaust from each Unit shall be directed to an operating oxidation catalyst.

3. BACT Limits. Emissions from each generator engine (Units FD-1 – 6) shall not exceed the emission limits specified for each of the pollutants below:

3.1 **Nitrogen oxides (NO_x):** 0.50 grams (g) per kilowatt-hour (kW-hr)

3.1.1 For compliance with Condition C.3.1, measurement of NO_x shall be determined using EPA Method 7E.

3.2 **Ammonia (NH_3):** 5 parts per million by volume (ppmv) at actual stack gas conditions

3.2.1 For compliance with Condition C.3.2, measurement of NH_3 shall be determined using EPA Conditional Test Method 027 or 038.

3.3 **Particulate Matter (PM):** 0.127 g/kW-hr

3.3.1 For compliance with Condition C.3.3, measurement of PM shall be determined using EPA Method 5.

3.4 **Particulate Matter with an aerodynamic diameter less than 10 microns (PM_{10}):** 0.127 g/kW-hr

3.4.1 For compliance with Condition C.3.4, measurement of PM_{10} shall be determined using EPA Method 201/201A and Other Test Method (OTM) 28, provided, however, that once proposed changes to Method 202 in 56 Fed. Reg. 12970 (March 25, 2009) become final and effective, EPA Method 202 shall be used in lieu of OTM 28.

3.5 **Particulate Matter with an aerodynamic diameter less than 2.5 microns ($PM_{2.5}$):** 0.127 g/kW-hr.

3.5.1 For compliance with Condition C.3.5, measurement of $PM_{2.5}$ shall be determined using EPA Method 201/201A and OTM 28, provided, however, that once proposed changes to Method 202 in 56 Fed. Reg. 12970 (March 25, 2009) become final and effective, EPA Method 202 shall be used in lieu of OTM 28.

3.6 **Visible Emissions:** Visible emissions, excluding condensed water vapor, shall not reduce visibility through the exhaust effluent more than 20 percent averaged over any six consecutive minutes.

3.6.1 For compliance with Condition C.3.6, measurement of visible emissions shall be determined using EPA Method 9.

3.7 **Carbon Monoxide (CO):** 0.1790 g/kW-hr

3.7.1 For compliance with Condition C.3.7, measurement of CO shall be determined using EPA Method 10.

3.8 **Volatile Organic Compounds (VOC):** 0.0230 g/kW-hr

3.8.1 For compliance with Condition C.3.8, measurement of VOC shall be determined using EPA Method 25A.

4. Potential to Emit (PTE) Emission Limits. Emissions from ~~each~~all six generator engines (Units FD-1 – 6) in aggregate shall not exceed the emission limits specified for each of the pollutants below:

4.1 **Nitrogen oxides (NO_x):** ~~1.550~~9.36 tons/rolling 12-month period

~~4.1.1For compliance with Condition C.4.1, measurement of NO_x shall be determined using EPA Method 7E.~~

4.2 **Particulate Matter with an aerodynamic diameter less than 10 microns (PM_{10}):** ~~4.80~~28.3 lbs/day

~~4.2.1For compliance with Condition C.4.2, measurement of PM_{10} shall be determined using EPA Method 201/201A and OTM 28, provided, however, that once proposed changes to Method 202 in 56 Fed. Reg. 12970 (March 25, 2009) become final and effective, EPA Method 202 shall be used in lieu of OTM 28.~~

4.3 **Particulate Matter with an aerodynamic diameter less than 2.5 microns ($PM_{2.5}$):** ~~4.80~~28.3 lbs/day

~~4.3.1For compliance with Condition C.4.3, measurement of $PM_{2.5}$ shall be determined using EPA Method 201/201A and OTM 28, provided, however, that once proposed changes to Method 202 in 56 Fed. Reg. 12970 (March 25, 2009) become final and effective, EPA Method 202 shall be used in lieu of OTM 28.~~

(9/17/09, Issue 3.2: Compliance requirements eliminated as they are redundant with C.3 (BACT) and C.5 (Power limit)

5. ~~Fuel Usage~~Power Output Limit. The permittee shall not ~~combust~~ generate in excess of ~~311.0 gallons~~4,212 kW (electrical output) of ~~fuel per hour~~energy in all of Units FD-1 – 6 in aggregate. *(9/17/09, Issue 2.1)*

6. Stack Test Requirements. The permittee shall stack test all generator engines (Units FD-1-6) within ~~Prior to each of~~ the first three drilling seasons that the Discoverer operates under this permit in the Chukchi Sea.~~, t~~The permittee, at his option, shall test a minimum of ~~shall stack test at least~~ two ~~of Units FD-1 – 6 as follows~~engines each year~~:~~.

6.1 At the end of the first three drilling seasons that the Discoverer operates under this permit in the Chukchi Sea, all six of Units FD-1 – 6 shall have been stack tested under the requirements of this section.

6.2 Each stack test shall be conducted at three different loads: 50%, 75% and 100%.

6.3 Each stack test run shall test for emissions of CO, NO_x, $PM_{2.5}$, PM_{10}, VOC, NH_3 and visible emissions.

(9/17/09, Issue 3.3.1: NH_3 compliance demonstrated by stack test instead of CEM)

6.4 During each test run, the permittee shall monitor and record the following information:

(9/17/09, Issue 4.1: No emissions calculations based on fuel consumption)

~~6.4.1Quantity of fuel used (in gallons);~~

~~6.4.2Density of the fuel used (in lbs/gallon);~~

~~6.4.3Heat content of the fuel used (in Btu/gallon); and~~

~~6.4.4~~6.4.1 Electrical power produced (in kW~~e~~ (electrical output)-hr).

6.5 For each engine, and each pollutant, the permittee shall determine emission factors in the following units: ~~g/kW-hr,~~ g/kW~~e~~ (electrical output)-hr, ~~lbs/kW-hr,~~ and lbs/kW~~e~~ (electrical output)-hr ~~and lbs/gallon~~.

7. Monitoring and Recordkeeping: The permittee shall:

~~7.1Equip each of Units FD-1 - 6 with a diesel fuel flow meter:~~

~~7.1.1Each fuel flow meter shall be located as close as practical to the fuel intake of the engine;~~

~~7.1.2Each fuel flow meter shall be totalizing and nonresettable; and~~

~~7.1.3Each fuel flow meter shall measure the fuel flow rate with accuracy equal to or better than 2 percent of the meter's upper range value.~~

~~7.2No less than 60 days before initial deployment of the Discoverer to the Chukchi Sea for the first drilling season, collect information from the manufacturer of each fuel flow meter so as to determine its accuracy. Submit this information to EPA no less than 30 days prior to operation within the Chukchi Sea.~~

~~7.3Maintain the accuracy of each fuel flow meter in accordance with manufacturer's recommendations.~~

~~*7.4*Monitor and record fuel usage for each engine on an hourly basis.~~

(9/17/09, Issue 2.1: Load-based monitoring instead of fuel-based emission calculations)

~~7.5~~7.1 Monitor and record the power output, in kW~~e~~ (electrical output), resulting from the operation of each of Units FD-1 -6 at least once every 10 minutes;

~~7.6~~7.2 Monitor and record the following operational parameters for each SCR, at least once every 10 minutes:

~~7.6.1~~7.2.1 The operational status of urea pump;

~~7.6.2~~7.2.2 The stack temperature upstream of the catalyst in either Celsius (^{o}C), or Fahrenheit (^{o}F); and

~~7.6.3~~7.2.3 The load level of all engines exhausting to the SCR system.~~; and~~

~~7.6.4The ammonia concentration in each stack.~~ *(9/17/09, Issue 3.3.1)*

~~7.7Monitor and record the hourly NO_x emissions from the exhaust of each engine, at least once per hour.~~

~~7.8Each month, determine compliance with the BACT limit in Condition C.3.1 for each hour during the month by calculating NO_x emissions using the highest emission factor collected under Condition C.6.5 and fuel usage data collected under Condition C.7.4.~~

~~7.9Each day, calculate and record for the previous calendar day, the emissions of NO_x, $PM_{2.5}$ and PM_{10} using the highest emission factor collected under Condition C.6.5 and fuel usage collected under Condition C.7.4.~~

(9/17/09, Issue 2.1: Emissions calculation requirements eliminated as they are redundant with C.3 (BACT) and C.5 (Power limit)

D. DISCOVERER PROPULSION ENGINE (FD-7)

1. The permittee shall not operate Unit FD-7 for any reason when operating the Discoverer as an OCS Source.

2. The permittee shall report to EPA via facsimile any deviation from Condition D.1 within 3 business days of identification.

E. DISCOVERER EMERGENCY GENERATOR (FD-8)

1. The permittee shall operate Unit FD-8 for no more than:

~~1.120 minutes during any one hour;~~ *(9/17/09, Issue 1.3)*

~~1.2~~1.1 120 minutes during any one day; and*(9/17/09, Issue 1.3)*

~~1.3~~1.2 48 hours during any rolling 12-month period. *(9/17/09, Issue 1.3)*

2. For each instance in which Unit FD-8 is operated while the Discoverer is an OCS Source, the permittee shall record the duration of the episode and the reason for operating.

3. The permittee shall report to EPA via facsimile any deviation from Condition E.1 within 3 business days of identification.

F. MLC COMPRESSOR ENGINES (FD-9 - 11)

1. BACT Limits. Emissions from each MLC compressor engine (Units FD-9 – 11) shall not exceed the emission limits specified for each of the pollutants below:

1.1 **NO_x and non-methane hydrocarbons (NMHC)**, in aggregate**:** 4.0 g/kW-hr

~~1.1.1For compliance with Condition F.1.1, measurement of NO_x shall be determined using EPA Method 7E.~~

~~1.1.2For compliance with Condition F.1.1, measurement of NMHC shall be determined using EPA Method 25A.~~

1.2 **PM:** 0.20 g/kW-hr

~~1.2.1For compliance with Condition F.1.2, measurement of PM shall be determined using EPA Method 5.~~

1.3 **PM_{10}:** 0.20 g/kW-hr

~~1.3.1For compliance with Condition F.1.3, measurement of PM_{10} shall be determined using EPA Method 201/201A and OTM 28, provided, however, that once proposed changes to Method 202 in 56 Fed. Reg. 12970 (March 25, 2009) become final and effective, EPA Method 202 shall be used in lieu of OTM 28.~~

1.4 **$PM_{2.5}$:** 0.20 g/kW-hr

~~1.4.1For compliance with Condition F.1.4, measurement of $PM_{2.5}$ shall be determined using EPA Method 201/201A and OTM 28, provided, however, that once proposed changes to Method 202 in 56 Fed. Reg. 12970 (March 25, 2009) become final and effective, EPA Method 202 shall be used in lieu of OTM 28.~~

1.5 **Visible Emissions:** Visible emissions, excluding condensed water vapor, shall not reduce visibility through the exhaust effluent more than 20 percent averaged over any six consecutive minutes.

1.5.1 For compliance with Condition F.1.5, measurement of visible emissions shall be determined using EPA Method 9.

1.6 **CO:** 3.5 g/kW-hr.

~~1.6.1For compliance with Condition F.1.6, measurement of CO shall be determined using EPA Method 10.~~

(9/17/09, Issue 3.3.3: New Tier 3 engines, therefore Tier 3 emission factors are sufficient and no stack testing is needed.)

2. PTE Annual Emission Limits. Emissions from all three MLC compressor engines (Units FD-9 – 11) in aggregate shall not exceed the emission limits specified for each of the pollutants below:

2.1 **NO_x:** 5.37 tons/rolling 12-month period

~~2.1.1For compliance with Condition F.2.1, measurement of NO_x shall be determined using EPA Method 7E.~~

3. **PTE Daily Emission Limits.** Emissions from each MLC compressor engine (Units FD-9 – 11) shall not exceed the emission limits specified for each of the pollutants below:

3.1 **PM_{10}:** 4.32 lbs/day*(Correction)*

~~3.1.1For compliance with Condition F.3.1, measurement of PM_{10} shall be determined using EPA Method 201/201A and OTM 28, provided, however, that once proposed changes to Method 202 in 56 Fed. Reg. 12970 (March 25, 2009) become final and effective, EPA Method 202 shall be used in lieu of OTM 28.~~

3.2 **$PM_{2.5}$:** 4.32 lbs/day

~~3.2.1For compliance with Condition F.3.2, measurement of PM2.5 shall be determined using EPA Method 201/201A and OTM 28, provided, however, that once proposed changes to Method 202 in 56 Fed. Reg. 12970 (March 25, 2009) become final and effective, EPA Method 202 shall be used in lieu of OTM 28.~~

(9/17/09, Issue 3.3.3: Compliance requirements eliminated as they are redundant with F.1.3 and F.1.4 and engine capacity.)

4. **Fuel Usage Limit.** The permittee shall not use in excess of 81,346 gallons of fuel in all three of Units FD-9 – 11 in aggregate during any rolling 12-month period.

~~**5.Stack Test Requirements.** Prior to each of the first three drilling seasons that the Discoverer operates under this permit in the Chukchi Sea, the permittee shall stack test at least one of Units FD-9 – 11 as follows:~~

~~5.1At the end of three drilling seasons that the Discoverer operates under this permit in the Chukchi Sea, all three of Units FD-9 – 11 shall have been stack tested under the requirements of this section.~~

~~5.2Each stack test shall be conducted at three different loads: 50%, 75% and 100%.~~

~~5.3Each stack test run shall test for emissions of CO, NO_x, NMHC, $PM_{2.5}$, PM_{10} and visible emissions.~~

~~5.4During each test run, the permittee shall monitor and record the following information:~~

~~5.4.1Quantity of fuel used (in gallons);~~

~~5.4.2Density of the fuel used (in lbs/gallon);~~

~~5.4.3Heat content of the fuel used (in Btu/gallon); and~~

~~5.4.4Mechanical power output (in kW).~~

~~5.5For each engine, and each pollutant, the permittee shall determine emission factors in the following units: g/kW-hr, lbs/kW-hr and lbs/gallon.~~

(9/17/09, Issue 3.3.3)

~~6.~~5. **Monitoring and Recordkeeping:** The permittee shall~~:~~ measure combined unit daily fuel consumption on Units FD-9 – 11 to an accuracy of 5 percent of maximum daily consumption. This can be performed by either tank gauging or in-line fuel flow meters. *(9/17/09, Issue 2.2)*

~~6.1Equip each of Units FD-9 -11 with a diesel fuel flow meter:~~

~~6.1.1Each fuel flow meter shall be located as close as practical to the fuel intake of the engine;~~

~~6.1.2Each fuel flow meter shall be totalizing and nonresettable; and~~

~~6.1.3Each fuel flow meter shall measure the fuel flow rate with accuracy equal to or better than 2 percent of the meter's upper range value.~~

~~6.2~~5.1 No less than 60 days before initial deployment of the Discoverer to the Chukchi Sea for the first drilling season, demonstrate a fuel tank measurement system that meets 5 percent accuracy of daily fuel consumption, or collect information from the manufacturer of each fuel flow meter so as to determine its accuracy. Submit this information to EPA no less than 30 days prior to operation within the Chukchi Sea.

~~6.3Maintain the accuracy of each fuel flow meter in accordance with manufacturer's recommendations.~~

~~6.4~~5.2 Monitor and record fuel usage for each engine on a daily basis.

~~6.5~~5.3 Each day, ~~calculate and~~ record for the previous calendar day, ~~the emissions of NO_x, $PM_{2.5}$ and PM_{10} using the highest emission factor collected under Condition F.5.5 and~~ fuel usage data collected under Condition F.~~6.4~~5.2 for comparison with the annual fuel limit of F.3.

G. HPU ENGINES (FD-12 - 13)

1. **Operation of Catalyzed Diesel Particulate Filter (CDPF).** At all times that any of Units FD-12 – 13 are in operation, the exhaust from each Unit shall be directed to an operating CleanAIR Systems CDPF, Part No. FDA300.

   1.1 Each CDPF shall be equipped with an operating HiBACK monitor and alarm unit, that records exhaust pressure and temperature.

   1.2 During each day that each of Units FD-12 -13 is operated, the exhaust temperature shall be above 300°C, or 572 ^{o}F for at least 30% of the time.

2. **BACT Limits.** Emissions from each HPU engine (Units FD-12 – 13) shall not exceed the emission limits specified for each of the pollutants below:

   2.1 **NO_x:** 13.155 g/kW-hr

~~2.1.1For compliance with Condition G.2.1, measurement of NO_x shall be determined using EPA Method 7E.~~

2.2 **PM:** 0.253 g/kW-hr

~~2.2.1For compliance with Condition G.2.2, measurement of PM shall be determined using EPA Method 5.~~

2.3 **PM_{10}:** 0.253 g/kW-hr

~~2.3.1For compliance with Condition G.2.3, measurement of PM_{10} shall be determined using EPA Method 201/201A and OTM 28, provided, however, that once proposed changes to Method 202 in 56 Fed. Reg. 12970 (March 25, 2009) become final and effective, EPA Method 202 shall be used in lieu of OTM 28.~~

2.4 **$PM_{2.5}$:** 0.253 g/kW-hr

~~2.4.1For compliance with Condition G.2.4, measurement of $PM_{2.5}$ shall be determined using EPA Method 201/201A and OTM 28, provided, however, that once proposed changes to Method 202 in 56 Fed. Reg. 12970 (March 25, 2009) become final and effective, EPA Method 202 shall be used in lieu of OTM 28.~~

2.5 **Visible Emissions:** Visible emissions, excluding condensed water vapor, shall not reduce visibility through the exhaust effluent more than 20 percent averaged over any six consecutive minutes.

2.5.1 For compliance with Condition G.2.5, measurement of visible emissions shall be determined using EPA Method 9.

2.6 **CO:** 0.40 g/kW-hr.

~~2.6.1For compliance with Condition G.2.6, measurement of CO shall be determined using EPA Method 10.~~

2.7 **VOC:** 0.20 g/kW-hr.

~~2.7.1For compliance with Condition G.2.6, measurement of VOC shall be determined using EPA Method 25A.~~

(9/17/09, Issue 3.3.3: Small engines, therefore application emissions factors are acceptable and no stack testing needed.)

3. BACT Good Combustion Practices for NO_x. The permittee shall:

3.1 Ensure that a full-time equipment maintenance specialist shall be on board at all times during operation as an OCS Source;

3.2 Train operating personnel to identify signs of improper operation and maintenance, including visible plumes, and to report these events to the maintenance specialist as soon as possible, but no later than within three hours of identification;

3.3 Have the maintenance specialist inspect, once each week, each of Units FD-12 – 13 for proper operation and maintenance consistent with the manufacturer's recommendations;

3.4 Ensure that the operation and maintenance manual provided by the manufacturer for each of Units FD-12 – 13 shall be kept on board the Discoverer at all times;

3.5 Follow the manufacturer's recommended operation and maintenance procedures for each of Units FD-12 – 13;

3.6 Maintain, on board the Discoverer, a log detailing when inspections pursuant to Condition G.3.3 and maintenance pursuant to Condition G.3.5 were conducted; and

3.7 No less than 30 days prior to each deployment of the Discoverer to the Chukchi Sea, the permittee shall provide notice to the EPA on how the permittee shall comply with the requirements of Conditions G.3.1 and G.3.2 for the upcoming drilling season.

4. PTE Annual Emission Limits. Emissions from both HPU engines (Units FD-12 – 13) in aggregate shall not exceed the emission limits specified for each of the pollutants below:

4.1 **NO_x:** 8.18 tons/rolling 12-month period

~~4.1.1 For compliance with Condition G.4.1, measurement of NO_x shall be determined using EPA Method 7E.~~

5. PTE Daily Emission Limits. Emissions from each HPU engine (Units FD-12 – 13) shall not exceed the emission limits specified for each of the pollutants below:

5.1 **PM_{10}:** 2.40 lbs/day

~~5.1.1For compliance with Condition G.5.1, measurement of PM_{10} shall be determined using EPA Method 201/201A and OTM 28, provided, however, that once proposed changes to Method 202 in 56 Fed. Reg. 12970 (March 25, 2009) become final and effective, EPA Method 202 shall be used in lieu of OTM 28.~~

5.2 **$PM_{2.5}$:** 2.40 lbs/day

~~5.2.1 For compliance with Condition G.5.2, measurement of $PM_{2.5}$ shall be determined using EPA Method 201/201A and OTM 28, provided, however, that once proposed changes to Method 202 in 56 Fed. Reg. 12970 (March 25, 2009) become final and effective, EPA Method 202 shall be used in lieu of OTM 28.~~

(9/17/09, Issue 3.3.3: Compliance requirements eliminated as they are redundant with G.2.1, G.2.3 and G.2.4 and engine capacity.)

6. Fuel Usage Limit. The permittee shall not use in excess of:

6.1 44,338 gallons of fuel in both of Units FD-12 – 13 in aggregate during any rolling 12-month period.

6.2 352 gallons of fuel in both of Units FD-12 – 13 in aggregate during any calendar day when greater than zero and up to 800 lbs of all types of waste in Unit FD-23 are incinerated. *(9/17/09, Issue 1.4)*

6.3 0 gallons of fuel in both of Units FD-12 – 13 in aggregate during any calendar day when greater than 800 lbs and up to 1,300 lbs of all types of waste in Unit FD-23 are incinerated. *(9/17/09, Issue 1.4)*

~~**6.Stack Test Requirements.** Prior to each of the first two drilling seasons that the Discoverer operates under this permit in the Chukchi Sea, the permittee shall stack test at least one of Units FD-12 – 13 as follows:~~

~~6.1At the end of two drilling seasons that the Discoverer operates under this permit in the Chukchi Sea, both of Units FD-12 – 13 shall have been stack tested under the requirements of this section.~~

~~6.2Each stack test shall be conducted at three different loads: 50%, 75% and 100%.~~

~~6.3Each stack test run shall test for emissions of CO, NO_x, $PM_{2.5}$, PM_{10}, VOC and visible emissions.~~

~~6.4During each test run, the permittee shall monitor and record the following information:~~

~~6.4.1Quantity of fuel used (in gallons);~~

~~6.4.2Density of the fuel used (in lbs/gallon);~~

~~6.4.3Heat content of the fuel used (in Btu/gallon); and~~

~~6.4.4Mechanical power output (in kW).~~

~~6.5For each engine, and each pollutant, the permittee shall determine emission factors in the following units: g/kW-hr, lbs/kW-hr and lbs/gallon.~~

(9/17/09, Issue 3.3.3)

~~8.~~7. **Monitoring and Recordkeeping:** The permittee shall measure combined unit daily fuel consumption on Units-12 – 13 to an accuracy of 5 percent of maximum daily consumption. This can be performed by either tank gauging or in-line fuel flow meters.~~:~~ *(9/17/09, Issue 2.2)*

~~7.1Equip each of Units FD-12 -13 with a diesel fuel flow meter:~~

~~7.1.1Each fuel flow meter shall be located as close as practical to the fuel intake of the engine;~~

~~7.1.2Each fuel flow meter shall be totalizing and nonresettable; and~~

~~7.1.3Each fuel flow meter shall measure the fuel flow rate with accuracy equal to or better than 2 percent of the meter's upper range value.~~

~~8.2~~7.1 No less than 60 days before initial deployment of the Discoverer to the Chukchi Sea for the first drilling season, demonstrate a fuel tank measurement system that meets 5 percent accuracy of daily fuel consumption, or collect information from the manufacturer of each fuel flow meter so as to determine its accuracy. Submit this information to EPA no less than 30 days prior to operation within the Chukchi Sea.

~~7.3Maintain the accuracy of each fuel flow meter in accordance with manufacturer's recommendations.~~

~~8.4~~7.2 Monitor and record fuel usage for each engine on a daily basis.

~~8.5~~7.3 Monitor the exhaust temperature of each engine by use of the HiBACK monitor and alarm unit, whenever the engine is in operation.

~~8.6~~7.4 Each day, calculate and record for the previous calendar day, the percent of operational time for each engine that the exhaust temperature was above 300°C (572°F).

~~8.7~~7.5 Each day, ~~calculate and~~ record for the previous calendar day, ~~the emissions of NO_x, $PM_{2.5}$ and PM_{10} using the highest emission factor collected under Condition G.7.5 and~~ fuel usage data collected under Condition G.~~8.4~~7.2 for comparison with the annual fuel limit of G.6.

H. DECK CRANES (FD-14 - 15)

1. Operation of Catalyzed Diesel Particulate Filter (CDPF). At all times that any of Units FD-14 – 15 in operation, the exhaust from each Unit shall be directed to an operating CleanAIR Systems CDPF, Part No. 07040401AF.

1.1 Each CDPF shall be equipped with an operating HiBACK monitor and alarm unit, that records exhaust pressure and temperature.

1.2 During each day that each of Units FD-14 -15 is operated, the exhaust temperature shall be above 300°C, or 572°F, for at least 30% of the time.

2. BACT Limits. Emissions from each deck crane engine (Units FD-14 – 15) shall not exceed the emission limits specified for each of the pollutants below:

2.1 **NO_x:** 10.327 g/kW-hr

~~2.1.1For compliance with Condition H.2.1, measurement of NO_x shall be determined using EPA Method 7E.~~

2.2 **PM:** 0.0715 g/kW-hr

~~2.2.1For compliance with Condition H.2.2, measurement of PM shall be determined using EPA Method 5.~~

2.3 **PM_{10}:** 0.0715 g/kW-hr.

~~2.3.1For compliance with Condition H.2.3, measurement of PM_{10} shall be determined using EPA Method 201/201A and OTM 28, provided, however, that once proposed changes to Method 202 in 56 Fed. Reg. 12970 (March 25, 2009) become final and effective, EPA Method 202 shall be used in lieu of OTM 28.~~

2.4 **$PM_{2.5}$:** 0.0715 g/kW-hr.

~~2.4.1For compliance with Condition H.2.4, measurement of $PM_{2.5}$ shall be determined using EPA Method 201/201A and OTM 28, provided, however, that once proposed changes to Method 202 in 56 Fed. Reg. 12970 (March 25, 2009) become final and effective, EPA Method 202 shall be used in lieu of OTM 28.~~

2.5 **Visible Emissions:** Visible emissions, excluding condensed water vapor, shall not reduce visibility through the exhaust effluent more than 20 percent averaged over any six consecutive minutes.

2.5.1 For compliance with Condition H.2.5, measurement of visible emissions shall be determined using EPA Method 9.

2.6 **CO:** 0.220 g/kW-hr.

~~2.6.1For compliance with Condition H.2.6, measurement of CO shall be determined using EPA Method 10.~~

2.7 **VOC:** 0.0640 g/kW-hr.

2.7.1 ~~For compliance with Condition H.2.7, measurement of VOC shall be determined using EPA Method 25A.~~

(9/17/09, Issue 3.3.3: Small engines, therefore application emissions factors are acceptable and no stack testing needed.)

3. BACT Good Combustion Practices for NO_x. The permittee shall:

3.1 Ensure that a full-time equipment maintenance specialist shall be on board at all times during operation as an OCS Source;

3.2 Train operating personnel to identify signs of improper operation and maintenance, including visible plumes, and to report these events to the maintenance specialist as soon as possible, but no later than within three hours of identification;

3.3 Have the maintenance specialist inspect, once each week, each of Units FD-14 – 15 for proper operation and maintenance consistent with the manufacturer's recommendations;

3.4 Ensure that the operation and maintenance manual provided by the manufacturer for each of Units FD-14 – 15 shall be kept on board the Discoverer at all times;

3.5 Follow the manufacturer's recommended operation and maintenance procedures for each of Units FD-14 – 15;

3.6 Maintain, on board the Discoverer, a log detailing when inspections pursuant to Condition H.3.3 and maintenance pursuant to Condition H.3.5 were conducted; and

3.7 No less than 30 days prior to initial deployment of the Discoverer to the Chukchi Sea, the permittee shall provide notice to the EPA on how the permittee shall comply with the requirements of Conditions H.3.1 and H.3.2 for the upcoming drilling season.

4. PTE Annual Emission Limits. Emissions from both deck crane engines (Units FD-14 – 15) in aggregate shall not exceed the emission limits specified for each of the pollutants below:

4.1 **NO_x:** 9.50 tons/rolling 12-month period

~~4.1.1For compliance with Condition H.4.1, measurement of NO_x shall be determined using EPA Method 7E.~~

5. PTE Daily Emission Limits. Emissions from each deck crane engine (Units FD-14 – 15) shall not exceed the emission limits specified for each of the pollutants below:

5.1 **PM_{10}:** 0.96 lbs/day

~~5.1.1For compliance with Condition H.5.1, measurement of PM_{10} shall be determined using EPA Method 201/201A and OTM 28, provided, however, that once proposed changes to Method 202 in 56 Fed. Reg. 12970 (March 25, 2009) become final and effective, EPA Method 202 shall be used in lieu of OTM 28.~~

5.2 **$PM_{2.5}$:** 0.96 lbs/day

~~5.2.1For compliance with Condition H.5.2, measurement of $PM_{2.5}$ shall be determined using EPA Method 201/201A and OTM 28, provided, however, that once proposed changes to Method 202 in 56 Fed. Reg. 12970 (March 25, 2009) become final and effective, EPA Method 202 shall be used in lieu of OTM 28.~~

(9/17/09, Issue 3.3.3: Compliance requirements eliminated as they are redundant with H.2.1, H.2.3 and H.2.4 and engine capacity)

6. Fuel Usage Limit. The permittee shall not use in excess of 63,661 gallons of fuel in both of Units FD-14 – 15 in aggregate during any rolling 12-month period.

~~**7.Stack Test Requirements.** Prior to each of the first two drilling seasons that the Discoverer operates under this permit in the Chukchi Sea, the permittee shall stack test at least one of Units FD-14 – 15 as follows:~~

~~7.1At the end of two drilling seasons that the Discoverer operates under this permit in the Chukchi Sea, both of Units FD-14 – 15 shall have been stack tested under the requirements of this section.~~

~~7.2Each stack test shall be conducted at three different loads: 50%, 75% and 100%.~~

~~7.3Each stack test run shall test for emissions of CO, NO_x, $PM_{2.5}$, PM_{10}, VOC and visible emissions.~~

~~7.4During each test run, the permittee shall monitor and record the following information:~~

~~7.4.1Quantity of fuel used (in gallons);~~

~~7.4.2Density of the fuel used (in lbs/gallon);~~

~~7.4.3Heat content of the fuel used (in Btu/gallon); and~~

~~7.4.4Mechanical power output (in kW).~~

~~7.5For each engine, and each pollutant, the permittee shall determine emission factors in the following units: g/kW-hr, lbs/kW-hr and lbs/gallon.~~

(9/17/09, Issue 3.3.3)

~~8.~~7. **Monitoring and Recordkeeping:** The permittee shall measure combined unit daily fuel consumption on Units FD-14 – 15 to an accuracy of 5 percent of maximum daily consumption. This can be performed by either tank gauging or in-line fuel flow meters.~~:~~
(9/17/09, Issue 2.2)

~~8.1Equip each of Units FD-14 -15 with a diesel fuel flow meter:~~

~~8.1.1Each fuel flow meter shall be located as close as practical to the fuel intake of the engine;~~

~~8.1.2Each fuel flow meter shall be totalizing and nonresettable; and~~

~~8.1.3Each fuel flow meter shall measure the fuel flow rate with accuracy equal to or better than 2 percent of the meter's upper range value.~~

~~8.2~~7.1 No less than 60 days before initial deployment of the Discoverer to the Chukchi Sea for the first drilling season, demonstrate a fuel tank measurement system that meets 5 percent accuracy of daily fuel consumption, or collect information from the manufacturer of each fuel flow meter so as to determine its accuracy. Submit this information to EPA no less than 30 days prior to operation within the Chukchi Sea.

~~8.3Maintain the accuracy of each fuel flow meter in accordance with manufacturer's recommendations.~~

~~8.4~~7.2 Monitor and record fuel usage for each engine on a daily basis.

~~8.5~~7.3 Monitor and record the exhaust temperature of each engine by use of the HiBACK monitor and alarm unit, while the engine is in operation.

~~8.6~~7.4 Each day, calculate and record for the previous calendar day, the percent of operational time for each engine that the exhaust temperature was above 300°C (572°F).

~~8.7~~7.5 Each day, ~~calculate and~~ record for the previous calendar day, ~~the emissions of NO_x, $PM_{2.5}$ and PM_{10} using the highest emission factor collected under Condition H.7.5 and~~ fuel usage data collected under Condition H.~~8.4~~7.2 for comparison with the annual fuel limit of H.6.

I. CEMENTING UNIT AND LOGGING WINCH ENGINES (FD-16 - 20)

1. Operation of Catalyzed Diesel Particulate Filter (CDPF). At all times that any of the cementing units (Units FD-16 – 18) or logging winches (Units FD-19-20) are in operation, the exhaust from each Unit shall be directed to operating CleanAIR Systems CDPF, Part No. FDA300 for Units FD-16 and 17, Part No. FDA225 for Units FD-18 and 19, and as specified by CleanAIR Systems for Unit FD-20.

1.1 Each CDPF shall be equipped with an operating HiBACK monitor and alarm unit, that records exhaust pressure and temperature.

1.2 During each day that each of Units FD-16 -20 is operated, the exhaust temperature shall be above 300°C, or 572°F, for at least 30% of the time.

2. BACT Limits. Emissions from each of Units FD-16 – 20 shall not exceed the emission limits specified for each of the pollutants below:

2.1 **NO_x:**

FD-16	13.155 g/kW-hr
FD-17	13.155 g/kW-hr
FD-18	15.717 g/kW-hr
FD-19	15.717 g/kW-hr
FD-20	7.50 g/kW-hr

~~2.1.1For compliance with Condition I.2.1, measurement of NO_x shall be determined using EPA Method 7E.~~

2.2 **PM:**

FD-16	0.253 g/kW-hr
FD-17	0.253 g/kW-hr
FD-18	0.386 g/kW-hr
FD-19	0.386 g/kW-hr
FD-20	0.090 g/kW-hr

~~2.2.1For compliance with Condition I.2.2, measurement of PM shall be determined using EPA Method 5.~~

2.3 **PM_{10}:**

FD-16	0.253 g/kW-hr
FD-17	0.253 g/kW-hr
FD-18	0.386 g/kW-hr
FD-19	0.386 g/kW-hr
FD-20	0.090 g/kW-hr

~~2.3.1For compliance with Condition I.2.3, measurement of PM_{10} shall be determined using EPA Method 201/201A and OTM 28, provided, however, that once proposed changes to Method 202 in 56 Fed. Reg. 12970 (March 25, 2009) become final and effective, EPA Method 202 shall be used in lieu of OTM 28.~~

2.4 **$PM_{2.5}$:**

FD-16	0.253 g/kW-hr
FD-17	0.253 g/kW-hr
FD-18	0.386 g/kW-hr
FD-19	0.386 g/kW-hr
FD-20	0.090 g/kW-hr

~~2.4.1For compliance with Condition I.2.4, measurement of $PM_{2.5}$ shall be determined using EPA Method 201/201A and OTM 28, provided, however, that once proposed changes to Method 202 in 56 Fed. Reg. 12970 (March 25, 2009) become final and effective, EPA Method 202 shall be used in lieu of OTM 28.~~

2.5 **Visible Emissions:** Visible emissions, excluding condensed water vapor, shall not reduce visibility through the exhaust effluent more than 20 percent averaged over any six consecutive minutes.

2.5.1 For compliance with Condition I.2.5, measurement of visible emissions shall be determined using EPA Method 9.

2.6 **CO:**

FD-16	0.40 g/kW-hr
FD-17	0.40 g/kW-hr
FD-18	0.880 g/kW-hr
FD-19	0.880 g/kW-hr
FD-20	0.550 g/kW-hr

~~2.6.1For compliance with Condition I.2.6, measurement of CO shall be determined using EPA Method 10.~~

2.7 **VOC:**

FD-16	0.20 g/kW-hr
FD-17	0.20 g/kW-hr
FD-18	0.270 g/kW-hr
FD-19	0.270 g/kW-hr
FD-20	0.750 g/kW-hr

~~2.7.1For compliance with Condition I.2.7, measurement of VOC shall be determined using EPA Method 25A.~~

(9/17/09, Issue 3.3.3: Small engines, therefore application emissions factors are acceptable and no stack testing needed.)

3. BACT Good Combustion Practices for NO_x. The permittee shall:

3.1 Ensure that a full-time equipment maintenance specialist shall be on board at all times during operation as an OCS Source;

3.2 Train operating personnel to identify signs of improper operation and maintenance, including visible plumes, and to report these events to the maintenance specialist as soon as possible, but no later than within three hours of identification;

3.3 Have the maintenance specialist inspect, once each week, each of Units FD-16 – 20 for proper operation and maintenance consistent with the manufacturer's recommendations;

3.4 Ensure that the operation and maintenance manual provided by the manufacturer for each of Units FD-16 – 20 shall be kept on board the Discoverer at all times;

3.5 Follow the manufacturer's recommended operation and maintenance procedures for each of Units FD-16 – 20;

3.6 Maintain, on board the Discoverer, a log detailing when inspections pursuant to Condition I.3.3 and maintenance pursuant to Condition I.3.5 were conducted; and

3.7 No less than 30 days prior to initial deployment of the Discoverer to the Chukchi Sea, the permittee shall provide notice to the EPA on how the permittee shall comply with the requirements of Conditions I.3.1 and I.3.2 for the upcoming drilling season.

4. PTE Annual Emission Limits. Emissions from all cementing unit and logging winch engines (Units FD-16 – 20) in aggregate shall not exceed the emission limits specified for each of the pollutants below:

4.1 **NO_x:** ~~12.77~~11.83 tons/rolling 12-month period*(9/17/09, Issue 1.3: Adjustment)*

~~4.1.1For compliance with Condition I.4.1, measurement of NO_x shall be determined using EPA Method 7E.~~

5. PTE Daily Emission Limits. Emissions from each cementing unit and logging winch engines (Units FD-16 – 20) ~~deck crane engine (Units FD-14 – 15)~~ *(Correction)* shall not exceed the emission limits specified for each of the pollutants below:

5.1 **PM_{10}:** ~~3.73~~3.46 lbs/day*(9/17/09, Issue 1.3: Adjustment)*

~~5.1.1For compliance with Condition I.5.1, measurement of PM_{10} shall be determined using EPA Method 201/201A and OTM 28, provided, however, that once proposed changes to Method 202 in 56 Fed. Reg. 12970 (March 25, 2009) become final and effective, EPA Method 202 shall be used in lieu of OTM 28.~~

5.2 **$PM_{2.5}$:** ~~3.73~~3.46 lbs/day*(9/17/09, Issue 1.3: Adjustment)*

~~5.2.1For compliance with Condition I.5.2, measurement of $PM_{2.5}$ shall be determined using EPA Method 201/201A and OTM 28, provided, however, that once proposed changes to Method 202 in 56 Fed. Reg. 12970 (March 25, 2009) become final and effective, EPA Method 202 shall be used in lieu of OTM 28.~~

(9/17/09, Issue 3.3.3: Compliance requirements eliminated as they are redundant with I.2.1, I.2.3 and I.2.4 and engine capacity.)

6. Fuel Usage Limit. The permittee shall not use in excess of:

~~6.157,960 gallons of fuel in all Units FD-16 – 20 in aggregate during any rolling 12-month period; and~~ *(9/17/09, Issue 3.2)*

~~6.2~~6.1 ~~345~~320 gallons of fuel in all Units FD-16 – 20 in aggregate during any calendar day. *(9/17/09, Issue 1.3)*

~~**7.Stack Test Requirements.** Prior to each of the first three drilling seasons that the Discoverer operates under this permit in the Chukchi Sea, the permittee shall stack test at least one of Units FD-16 – 20 as follows:~~

~~7.1At the end of the first three drilling seasons that the Discoverer operates under this permit in the Chukchi Sea, all of Units FD-16 – 20 shall have been stack tested under the requirements of this section.~~

~~7.2Each stack test shall be conducted at three different loads: 50%, 75% and 100%.~~

~~7.3Each stack test run shall test for emissions of CO, NO_x, $PM_{2.5}$, PM_{10}, VOC and visible emissions.~~

~~7.4During each test run, the permittee shall monitor and record the following information:~~

~~7.4.1Quantity of fuel used (in gallons);~~

~~7.4.2Density of the fuel used (in lbs/gallon);~~

~~7.4.3Heat content of the fuel used (in Btu/gallon); and~~

~~7.4.4Mechanical power output (in kW).~~

~~7.5For each engine, and each pollutant, the permittee shall determine emission factors in the following units: g/kW-hr, lbs/kW-hr and lbs/gallon.~~

(9/17/09, Issue 3.3.3)

~~8.~~7. **Monitoring and Recordkeeping:** The permittee shall measure combined unit daily fuel consumption on Units-16 – 20 to an accuracy of 5 percent of maximum daily consumption. This can be performed by either tank gauging or in-line fuel flow meters.~~:~~ *(9/17/09, Issue 2.2)*

~~8.1Equip each of Units FD-16 – 20 with a diesel fuel flow meter:~~

~~8.1.1Each fuel flow meter shall be located as close as practical to the fuel intake of the engine;~~

~~8.1.2Each fuel flow meter shall be totalizing and nonresettable; and~~

~~8.1.3Each fuel flow meter shall measure the fuel flow rate with accuracy equal to or better than 2 percent of the meter's upper range value.~~

~~8.2~~7.1 No less than 60 days before initial deployment of the Discoverer to the Chukchi Sea for the first drilling season, demonstrate a fuel tank measurement system that meets 5 percent accuracy of daily fuel consumption, or collect information from the manufacturer of each fuel flow meter so as to determine its accuracy. Submit this information to EPA no less than 30 days prior to operation within the Chukchi Sea.

~~8.3Maintain the accuracy of each fuel flow meter in accordance with manufacturer's recommendations.~~

~~8.4~~7.2 Monitor and record fuel usage for each engine on a daily basis.

~~8.5~~7.3 Monitor and record the exhaust temperature of each engine by use of the HiBACK monitor and alarm unit, while the engine is in operation.

~~8.6~~7.4 Each day, calculate and record for the previous calendar day, the percent of operational time for each engine that the exhaust temperature was above 300°C (572°F).

~~8.7~~7.5 Each day, ~~calculate and~~ record for the previous calendar day, ~~the emissions of NO_x, $PM_{2.5}$ and PM_{10} using the highest emission factor collected under Condition I.7.5 and~~ fuel usage data collected under Condition I.~~8.4~~7.2 for comparison with the daily fuel limit of I.6.

J. HEAT BOILERS (FD-21 - 22)

1. BACT Limits. Emissions from each of the heat boilers (Units FD-21 – 22) shall not exceed the emission limits specified for each of the pollutants below:

1.1 **NO_x:** 0.20 lbs/MMBtu

~~1.1.1For compliance with Condition J.1.1, measurement of NO_x shall be determined using EPA Method 7E.~~

1.2 **PM:** 0.0235 lbs/MMBtu

~~1.2.1For compliance with Condition J.1.2, measurement of PM shall be determined using EPA Method 5.~~

1.3 **PM_{10}:** 0.0235 lbs/MMBtu

~~1.3.1For compliance with Condition J.1.3, measurement of PM_{10} shall be determined using EPA Method 201/201A and OTM 28, provided, however, that once proposed changes to Method 202 in 56 Fed. Reg. 12970 (March 25, 2009) become final and effective, EPA Method 202 shall be used in lieu of OTM 28.~~

1.4 **$PM_{2.5}$:** 0.0235 lbs/MMBtu

~~1.4.1For compliance with Condition J.1.4, measurement of $PM_{2.5}$ shall be determined using EPA Method 201/201A and OTM 28, provided, however, that once proposed changes to Method 202 in 56 Fed. Reg. 12970 (March 25, 2009) become final and effective, EPA Method 202 shall be used in lieu of OTM 28.~~

1.5 **Visible Emissions:** Visible emissions, excluding condensed water vapor, shall not reduce visibility through the exhaust effluent more than 20 percent averaged over any six consecutive minutes.

1.5.1 For compliance with Condition J.1.5, measurement of visible emissions shall be determined using EPA Method 9.

1.6 **CO:** 0.0770 lbs/MMBtu

~~1.6.1For compliance with Condition J.1.6, measurement of CO shall be determined using EPA Method 10.~~

1.7 **VOC:** 0.00140 lbs/MMBtu

~~1.7.1For compliance with Condition J.1.7, measurement of VOC shall be determined using EPA Method 25A.~~

(9/17/09, Issue 3.3.3: Small source, manufacture data used and no stack testing needed.)

2. BACT Good Combustion Practices for NO_x, PM, $PM_{2.5}$, PM_{10}, CO and VOC. The permittee shall:

2.1 Ensure that a full-time equipment maintenance specialist shall be on board at all times during operation as an OCS Source;

2.2 Train operating personnel to identify signs of improper operation and maintenance, including visible plumes, and to report these events to the maintenance specialist as soon as possible, but no later than within three hours of identification;

2.3 Have the maintenance specialist inspect, once each week, each of Units FD-21 – 22 for proper operation and maintenance consistent with the manufacturer's recommendations;

2.4 Ensure that the operation and maintenance manual provided by the manufacturer for each of Units FD-21 – 22 shall be kept on board the Discoverer at all times;

2.5 Follow the manufacturer's recommended operation and maintenance procedures for each of Units FD-21 – 22;

2.6 Maintain, on board the Discoverer, a log detailing when inspections pursuant to Condition J.2.3 and maintenance pursuant to Condition J.2.5 were conducted; and

2.7 No less than 30 days prior to initial deployment of the Discoverer to the Chukchi Sea, the permittee shall provide notice to the EPA on how the permittee shall comply with the requirements of Conditions J.2.1 and J.2.2 for the upcoming drilling season.

3. PTE Annual Emission Limits. Emissions from all heat boilers (Units FD-21 – 22) in aggregate shall not exceed the emission limits specified for each of the pollutants below:

3.1 **NO_x:** 6.46 tons/rolling 12-month period

~~3.1.1For compliance with Condition J.3.1, measurement of NO_x shall be determined using EPA Method 7E.~~

4. PTE Daily Emission Limits. Emissions from each heat boiler (Units FD-21 – 22) shall not exceed the emission limits specified for each of the pollutants below:

4.1 **PM_{10}:** 4.50 lbs/day

~~4.1.1For compliance with Condition J.4.1, measurement of PM_{10} shall be determined using EPA Method 201/201A and OTM 28, provided, however, that once proposed changes to Method 202 in 56 Fed. Reg. 12970 (March 25, 2009) become final and effective, EPA Method 202 shall be used in lieu of OTM 28.~~

4.2 **$PM_{2.5}$:** 4.50 lbs/day

~~4.2.1For compliance with Condition J.4.2, measurement of $PM_{2.5}$ shall be determined using EPA Method 201/201A and OTM 28, provided, however, that once proposed changes to Method 202 in 56 Fed. Reg. 12970 (March 25, 2009) become final and effective, EPA Method 202 shall be used in lieu of OTM 28.~~

(9/17/09, Issue 3.3.3: Compliance requirements eliminated as they are redundant with J.1.1, J.1.3 and J.1.4 and boiler capacity.)

~~**5.Stack Test Requirements.** Prior to each of the first two drilling seasons that the Discoverer operates under this permit in the Chukchi Sea, the permittee shall stack test at least one of Units FD-21 – 22 as follows:~~

~~5.1At the end of the first two drilling seasons that the Discoverer operates under this permit in the Chukchi Sea, both of Units FD-21 – 22 shall have been stack tested under the requirements of this section.~~

~~5.2Each stack test shall be conducted at three different loads: 50%, 75% and 100%.~~

~~5.3Each stack test run shall test for emissions of CO, NO_x, $PM_{2.5}$, PM_{10}, VOC and visible emissions.~~

~~5.4During each test run, the permittee shall monitor and record the following information:~~

~~5.4.1Quantity of fuel used (in gallons);~~

~~5.4.2Density of the fuel used (in lbs/gallon); and~~

~~5.4.3Heat content of the fuel used (in Btu/gallon).~~

~~5.5For each boiler, and each pollutant, the permittee shall determine emission factors in the following units: lbs/MMBtu and lbs/gallon.~~

(9/17/09, Issue 3.3.3)

~~6.~~5. **Monitoring and Recordkeeping:** The permittee shall measure combined unit daily fuel consumption on Units FD-21 – 22 to an accuracy of 5 percent of maximum daily consumption. This can be performed by either tank gauging or in-line fuel flow meters.~~:~~*(9/17/09, Issue 2.2)*

~~6.1Equip each of Units FD-21 - 22 with a diesel fuel flow meter:~~

~~6.1.1Each fuel flow meter shall be located as close as practical to the fuel intake of the boiler;~~

~~6.1.2Each fuel flow meter shall be totalizing and nonresettable; and~~

~~6.1.3Each fuel flow meter shall measure the fuel flow rate with accuracy equal to or better than 2 percent of the meter's upper range value.~~

~~6.2~~5.1 No less than 60 days before initial deployment of the Discoverer to the Chukchi Sea for the first drilling season, demonstrate a fuel tank measurement system that meets 5 percent accuracy of daily fuel consumption, or collect information from the manufacturer of each fuel flow meter so as to determine its accuracy. Submit this information to EPA no less than 30 days prior to operation within the Chukchi Sea.

~~6.3Maintain the accuracy of each fuel flow meter in accordance with manufacturer's recommendations.~~

~~6.4~~5.2 Monitor and record fuel usage for each boiler on a daily basis.

~~6.5~~5.3 Each day, ~~calculate and~~ record for the previous calendar day, ~~the emissions of NO_x, $PM_{2.5}$ and PM_{10} using the highest emission factor collected under Condition J.5.5 and~~ fuel usage data collected under Condition J.~~6.4~~5.2.

K. INCINERATOR (FD-23)

1. BACT Limits. Emissions from the incinerator (Unit FD-23) shall not exceed the emission limits specified for each of the pollutants below:

1.1 **NO_x:** 5.0 lbs/ton of waste incinerated

1.1.1 For compliance with Condition K.1.1, measurement of NO_x shall be determined using EPA Method 7E.

1.2 **PM:** 8.20 lbs/ ton of waste incinerated

1.2.1 For compliance with Condition K.1.2, measurement of PM shall be determined using EPA Method 5.

1.3 **PM_{10}:** 8.20 lbs/ton of waste incinerated

1.3.1 For compliance with Condition K.1.3, measurement of PM_{10} shall be determined using EPA Method 201/201A and OTM 28, provided, however, that once proposed changes to Method 202 in 56 Fed. Reg. 12970 (March 25, 2009) become final and effective, EPA Method 202 shall be used in lieu of OTM 28.

1.4 **$PM_{2.5}$:** 7.00 lbs/ton of waste incinerated

1.4.1 For compliance with Condition K.1.4, measurement of $PM_{2.5}$ shall be determined using EPA Method 201/201A and OTM 28, provided, however, that once proposed changes to Method 202 in 56 Fed. Reg. 12970 (March 25, 2009) become final and effective, EPA Method 202 shall be used in lieu of OTM 28.

1.5 **CO:** 31.0 lbs/ton of waste incinerated

1.5.1 For compliance with Condition K.1.5, measurement of CO shall be determined using EPA Method 10.

1.6 **VOC:** 3.0 lbs/ton of waste incinerated

1.6.1 For compliance with Condition K.1.6, measurement of VOC shall be determined using EPA Method 25A.

2. BACT Good Combustion Practices for NO_x, PM, $PM_{2.5}$, PM_{10}, CO and VOC. The permittee shall:

2.1 Ensure that a full-time equipment maintenance specialist shall be on board at all times during operation as an OCS Source;

2.2 Train operating personnel to identify signs of improper operation and maintenance, including visible plumes, and to report these events to the maintenance specialist as soon as possible, but no later than within three hour of identification;

2.3 Have the maintenance specialist inspect, once each week, Unit FD-23 for proper operation and maintenance consistent with the manufacturer's recommendations;

2.4 Ensure that the operation and maintenance manual provided by the manufacturer for Unit FD-23 shall be kept on board the Discoverer at all times;

2.5 Follow the manufacturer's recommended operation and maintenance procedures for Unit FD-23;

2.6 Maintain, on board the Discoverer, a log detailing when inspections pursuant to Condition K.2.3 and maintenance pursuant to Condition K.2.5 were conducted; and

2.7 No less than 30 days prior to initial deployment of the Discoverer to the Chukchi Sea, the permittee shall provide notice to the EPA on how the permittee shall comply with the requirements of Conditions K.2.1 and K.2.2 for the upcoming drilling season.

3. PTE Annual Emission Limits. Emissions from the incinerator (Unit FD-23) shall not exceed the emission limits specified for each of the pollutants below:

3.1 **NO_x:** ~~0.32~~0.27 tons/rolling 12-month period *(9/17/09, Issue 1.4: Adjustment)*

3.1.1 For compliance with Condition K.3.1, measurement of NO_x shall be determined using EPA Method 7E.

4. PTE Daily Emission Limits. Emissions from the incinerator (Unit FD-23) shall not exceed the emission limits specified for each of the pollutants below:

4.1 **PM_{10}:** ~~6.25~~5.33 lbs/day, (when up greater than 800 lbs and up to 1,300 lbs of waste is incinerated in any calendar day.)

3.28 lbs day, (when greater than 300 and less than 800 lbs of waste is incinerated in any calendar day.)

1.23 lbs/day, (when less than 300 lbs of waste is incinerated in any calendar day.) *(9/17/09, Issue 1.4)*

4.1.1 For compliance with Condition K.4.1, measurement of PM_{10} shall be determined using EPA Method 201/201A and OTM 28, provided, however, that once proposed changes to Method 202 in 56 Fed. Reg. 12970 (March 25, 2009) become final and effective, EPA Method 202 shall be used in lieu of OTM 28.

4.2 **$PM_{2.5}$:** ~~5.34~~4.55 lbs/day, (when up greater than 800 lbs and up to 1,300 lbs of waste is incinerated in any calendar day.)

2.80 lbs day, (when greater than 300 and less than 800 lbs of waste is incinerated in any calendar day.)

1.05 lbs/day, (when less than 300 lbs of waste is incinerated in any calendar day.) *(9/17/09, Issue 1.4)*

4.2.1 For compliance with Condition K.4.2, measurement of $PM_{2.5}$ shall be determined using EPA Method 201/201A and OTM 28, provided, however, that once proposed changes to Method 202 in 56 Fed. Reg. 12970 (March 25, 2009) become final and effective, EPA Method 202 shall be used in lieu of OTM 28.

5. PTE Throughput-Based Emission Limits. Emissions from the incinerator (Unit FD-23) shall not exceed the emission limits specified for each of the pollutants below:

5.1 **PM_{10}:** 8.20 lbs/ton of waste incinerated

5.1.1 For compliance with Condition K.5.1, measurement of PM_{10} shall be determined using EPA Method 201/201A and OTM 28, provided, however, that once proposed changes to Method 202 in 56 Fed. Reg. 12970 (March 25, 2009) become final and effective, EPA Method 202 shall be used in lieu of OTM 28.

5.2 **$PM_{2.5}$:** 7.00 lbs//ton of waste incinerated

5.2.1 For compliance with Condition K.5.2, measurement of $PM_{2.5}$ shall be determined using EPA Method 201/201A and OTM 28, provided, however, that once proposed changes to Method 202 in 56 Fed. Reg. 12970 (March 25, 2009) become final and effective, EPA Method 202 shall be used in lieu of OTM 28.

5.3 **SO_2:** 2.50 lbs//ton of waste incinerated

5.3.1 For compliance with Condition K.5.3, measurement of SO_2 shall be determined using EPA Method 6C.

6. Waste Throughput Limit. The permittee shall not incinerate in excess of:

~~a.256,200 lbs of all types of waste in Unit FD-23 during any rolling 12-month period; and~~ *(9/17/09, Issue 3.2)*

6.1 ~~1525~~300 lbs of all types of waste in Unit FD-23 during any calendar day, while 2 HPU (Units FD-12 & 13) are in operation.*(9/17/09, Issue 1.4)*

6.2 800 lbs of all types of waste in Unit FD-23 during any calendar day, while 1 HPU (Units FD-12 & 13) are in operation. *(9/17/09, Issue 1.4)*

6.3 1,300 lbs of all types of waste in Unit FD-23 during any calendar day, while no HPU (Units FD-12 & 13) are in operation. *(9/17/09, Issue 1.4)*

7. Stack Test Requirements. Prior to each of the first three drilling seasons that the Discoverer operates under this permit in the Chukchi Sea, the permittee shall stack test the incinerator (Unit FD-23) as follows:

7.1 Each stack test shall be conducted at full rated capacity.

7.2 For the first drilling season, each stack test run shall test for emissions of CO, NO_x, $PM_{2.5}$, PM_{10}, SO_2 and VOC.

7.3 For subsequent drilling seasons, each stack test run shall test for emissions of NO_x, $PM_{2.5}$, PM_{10}, and SO_2.

7.4 During each test run, the permittee shall monitor and record the following information:

~~7.4.1Quantity of fuel used (in gallons);~~

~~7.4.2Density of the fuel used (in lbs/gallon);~~

~~7.4.3Heat content of the fuel used (in Btu/gallon);~~ *(9/17/09, Issue 4.1)*

~~7.4.4~~7.4.1 Quantity of waste incinerated (tons); and

~~7.4.5~~7.4.2 Type of waste incinerated.

7.5 For each pollutant, the permittee shall determine emission factors in the following units: lbs/ton of waste incinerated.

8. Monitoring and Recordkeeping: The permittee shall:

8.1 For each batch of waste charged to the incinerator:

8.1.1 Record the date and time that each batch of waste was charged to the incinerator;

8.1.2 Weigh the batch of waste by using a weigh scale used that shall be accurate to within ~~0.0~~5 lbs; and

(9/17/09, Issue 4.3)

8.1.3 Record the weight of each batch of waste charged to the incinerator.

8.2 No less than 60 days before initial deployment of the Discoverer to the Chukchi Sea for the first drilling season, collect information from the manufacturer of the weigh scale to determine its accuracy. Submit this information to EPA no less than 30 days prior to operation within the Chukchi Sea.

8.3 Maintain the accuracy of the weigh scale in accordance with manufacturer's recommendations.

8.4 Monitor and record the exhaust temperature of the incinerator at least every 15 minutes.

8.5 Each day, calculate and record for the previous calendar day, the emissions of NO_x, $PM_{2.5}$ and PM_{10} using the highest emission factor collected under Condition K.7.5 and waste material incinerated throughput collected under Condition K.8.1.

L. SUPPLY SHIP GENERATOR ENGINE (FD-31)

1. Operational Limits. For events where the supply ship is attached to the Discoverer, the permittee shall:

1.1 Limit operation of the supply ship generator to no more than 12 hours per day for each event;

1.2 Only operate a generator that is rated at or less than 292 hp; and

1.3 Limit the total number of events to 8 per rolling 12-month period.

2. PTE Annual Emission Limits. Emissions from operation of the supply ship generator engine (Unit FD-31) shall not exceed the emission limits specified for each of the pollutants below:

2.1 **NO_x:** 0.43 tons/rolling 12-month period

~~2.1.1For compliance with Condition L.2.1, measurement of NO_x shall be determined using EPA Method 7E.~~

3. PTE Daily Emission Limits. Emissions from operation of the supply ship generator engine (Unit FD-31) shall not exceed the emission limits specified for each of the pollutants below:

3.1 **PM_{10}:** 7.60 lbs/day

~~3.1.1For compliance with Condition L.3.1, measurement of PM_{10} shall be determined using EPA Method 201/201A and OTM 28, provided, however, that once proposed changes to Method 202 in 56 Fed. Reg. 12970 (March 25, 2009) become final and effective, EPA Method 202 shall be used in lieu of OTM 28.~~

3.2 **$PM_{2.5}$:** 7.60 lbs/day

~~3.2.1For compliance with Condition L.3.2, measurement of $PM_{2.5}$ shall be determined using EPA Method 201/201A and OTM 28, provided, however, that once proposed changes to Method 202 in 56 Fed. Reg. 12970 (March 25, 2009) become final and effective, EPA Method 202 shall be used in lieu of OTM 28.~~

(9/17/09, Issue 3.3: Permit application emission factors are sufficient.)

~~**4.Stack Test Requirements.** Prior to the first supply ship trip of each drilling season to resupply the Discoverer while the Discoverer is operating under this permit in the Chukchi Sea, the permittee shall stack test the supply ship generator engine (Unit FD-31) as follows:~~

~~4.1If the generator from the intended supply ship has already been tested pursuant to Conditions L.4.2 through L.4.5 during the past 5 years, no additional stack testing is required:~~

~~4.2Each stack test shall be conducted at 100% load.~~

~~4.3Each stack test run shall test for emissions of NO_x, $PM_{2.5}$ and PM_{10}.~~

~~4.4During each test run, the permittee shall monitor and record the following information:~~

~~4.4.1Manufacturer and model no. of the engine;~~

~~4.4.2The rated capacity of the engine (in hp);~~

~~4.4.3Quantity of fuel used (in gallons);~~

~~4.4.4Density of the fuel used (in lbs/gallon);~~

~~4.4.5Heat content of the fuel used (in Btu/gallon); and~~

~~4.4.6Electrical power output (in kWe).~~

~~4.5For each engine, and each pollutant, the permittee shall determine emission factors in the following units: lbs/kWe-hr and lbs/gallon.~~

(9/17/09, Issue 3.3)

~~5.~~4. **Monitoring and Recordkeeping:** The permittee shall:

~~5.1~~4.1 For each event, record the date and time that the supply ship attaches to the Discoverer;

~~5.2~~4.2 For each event, record the date and time that the supply ship detaches from the Discoverer;

~~5.3~~4.3 For each event, record the manufacturer, model no. and rated capacity (in hp) of the supply ship generator engine.~~; and~~

~~5.4For each event, calculate daily emissions of NO_x, $PM_{2.5}$ and PM_{10} using the data collected under Conditions L.4.5, L.5.1 and L.5.2. In calculating emissions, the permittee shall assume that the Unit 31 was operated at full load during the time the supply ship was attached to the Discoverer.~~ *(9/17/09, Issue 3.2)*

M. SHALLOW GAS DIVERTER SYSTEM (FD-33)

1. Shallow Gas Diversions. The permittee shall:

1.1 Record the frequency and duration of each shallow gas diversion.

1.2 Report the frequency and duration of each shallow gas diversion no later than February 1st for the time period beginning January 1st and ending December 31st of the preceding year.

N. ICEBREAKER ~~#1~~ *(9/17/09, Issue 1.1)*

1. Aggregate Capacity Limits. For a given drilling season, the permittee may select any vessel as Icebreaker ~~#1~~, subject to the following conditions:

1.1 The total capacity of all propulsion engines and utility generator engines on the Icebreaker ~~#1~~ shall not exceed 31,200 hp.

1.2 The total capacity of all utility generator engines on the Icebreaker ~~#1~~ shall not exceed 2,800 hp. *(9/17/09, Issue 4.2:"utility generator")*

1.3 The total capacity of all boilers on the Icebreaker ~~#1~~ shall not exceed 10 MMBtu/hr.

1.4 The total capacity of all incinerators on the Icebreaker ~~#1~~ shall not exceed 154 lbs/hr.

1.5 Total uncontrolled emissions of $PM_{2.5}$ from all emission sources on board the Icebreaker ~~#1~~ shall not exceed 42.20 lbs/hour.

~~1.5.1For compliance with Condition N.1.5, measurement of $PM_{2.5}$ shall be determined using EPA Method 201/201A and OTM 28, provided, however, that once proposed changes to Method 202 in 56 Fed. Reg. 12970 (March 25, 2009) become final and effective, EPA Method 202 shall be used in lieu of OTM 28.~~ *(Redundant with N.4.2.1)*

~~1.5.2For the purposes of Condition N.1.5, emissions from each emission unit shall be based on operation of that emission unit at 100% of rated capacity, except for the propulsion engines, for which emissions shall be based on operation of that emission unit at 80% of rated capacity.~~ *(Moved to N.4.2.2)*

1.6 Total uncontrolled emissions of PM_{10} from all emission sources on board the Icebreaker ~~#1~~ shall not exceed 48.0 lbs/hour.

~~1.6.1For compliance with Condition N.1.6, measurement of PM_{10} shall be determined using EPA Method 201/201A and OTM 28, provided, however, that once proposed changes to Method 202 in 56 Fed. Reg. 12970 (March 25, 2009) become final and effective, EPA Method 202 shall be used in lieu of OTM 28.~~ *(Redundant with N.4.1.1)*

~~1.6.2For the purposes of Condition N.1.6, emissions from each emission unit shall be based on operation of that emission unit at 100% of rated capacity, except for the propulsion engines, for which emissions shall be based on operation of that emission unit at 80% of rated capacity.~~ *(Moved to N.4.1.2)*

1.7 No later than 45 days prior to deployment to the Chukchi Sea each drilling season, the permittee shall provide notification to EPA of the vessel selected as the Icebreaker ~~#1~~. The notification shall include a list of all emission sources on board the vessel as well as manufacturer, model and rated capacity of each such emission source.

~~1.8During the drilling season, the permittee may switch the designation of Icebreaker #1 and Icebreaker #2 and reposition the vessels, provided that Icebreaker #1 continues to comply with the distance and location requirements of Condition N.6 until Icebreaker #2 complies with the distance and location requirements of Condition N.6. The permittee shall record the date and time that the designations are switched and provide notification to EPA within 3 business days. Subsequent to the designation switch, each vessel must comply with the requirements of Condition N or O as applicable to its new designation.~~ *(9/17/09, Issue 1.1)*

2. Capacity Limit on the Icebreaker ~~#1~~ Propulsion Engines. At all times while the Discoverer is an OCS Source and the Icebreaker ~~#1~~ is within 25 miles of the Discoverer, the permittee shall limit operation of the propulsion engines in the Icebreaker ~~#1~~ to no greater than 80% of rated aggregate capacity. *(9/17/09, Issue 1.1)*

3. PTE Annual Emission Limits. At all times while the Discoverer is an OCS Source and the Icebreaker ~~#1~~ is within 25 miles of the Discoverer, emissions from all emission ~~sources~~units on the Icebreaker ~~#1 and Icebreaker #2 in aggregate~~ shall not exceed the emission limits specified for each of the pollutants below:

3.1 **NO_x:** 850.0~~1699.0~~ tons/rolling 12-month period *(9/17/09, Issue 1.1: Adjustment)*

3.1.1 For compliance with Condition N.3.1, measurement of NO_x shall be determined using EPA Method 7E.

4. PTE ~~Daily~~Hourly Emission Limits. At all times while the Discoverer is an OCS Source and the Icebreaker ~~#1~~ is within 25 miles of the Discoverer, emissions from emission ~~sources~~units on the Icebreaker ~~#1 and Icebreaker #2 in aggregate~~ shall not exceed the emission limits specified for each of the pollutants below:

4.1 **PM_{10}:** ~~2,304.0~~48.0 lbs/~~day~~hr, total *(9/17/09, Issue 1.1: Adjustment)*

2.49 lbs/hr for Boilers

1.02 lbs/hr for Incinerators

4.1.1 For compliance of propulsion and utility generator engines with Condition N.4.1, measurement of PM_{10} shall be determined using EPA Method 201/201A and OTM 28, provided, however, that once proposed changes to Method 202 in 56 Fed. Reg. 12970 (March 25, 2009) become final and effective, EPA Method 202 shall be used in lieu of OTM 28.

4.1.2 For the purposes of Condition N.4.1, emissions from each utility generator engine shall be based on operation of that emission unit at 100% of rated capacity, and emissions from each propulsion engine shall be based on operation of that emission unit at 80% of rated capacity. *(Moved N.1.6.2)*

4.2 **$PM_{2.5}$:** ~~2,025.7~~42.2 lbs/~~day~~day, total *(9/17/09,Issue 1.1)*

2.20 lbs/hr for Boilers

0.70 lbs/hr for Incinerators

4.2.1 For compliance of propulsion and utility generator engines with Condition N.4.2, measurement of $PM_{2.5}$ shall be determined using EPA Method 201/201A and OTM 28, provided, however, that once proposed changes to Method 202 in 56 Fed. Reg. 12970 (March 25, 2009) become final and effective, EPA Method 202 shall be used in lieu of OTM 28.

4.2.2 For the purposes of Condition N.4.2, emissions from each utility generator engine shall be based on operation of that emission unit at 100% of rated capacity, and emissions from each propulsion engine shall be based on operation of that emission unit at 80% of rated capacity. *(Moved N.1.5.2)*

4.3 **NO_x:** 58.76 lb/hr for Boilers

0.23 lb/hr for Incinerators

~~**5.Fuel Usage Limit.** At all times while the Discoverer is an OCS Source and Icebreaker #1 is within 25 miles of the Discoverer, the permittee shall not use in excess of:~~

~~5.111,429,120 gallons of fuel in all of the emission sources on board Icebreaker #1 and Icebreaker #2 in aggregate during any rolling 12-month period;~~ *(9/17/09, Issue 3.2)*

~~5.268,030 gallons of fuel in all of the emission sources on board Icebreaker #1 and Icebreaker #2 in aggregate during any calendar day;~~ *(9/17/09, Issue 2.1)*

~~6.~~5. **Operating Location and Distance from Discoverer.** Except when transferring crew and supplies to and from the Discoverer, or traveling on other non-icebreaking activities, the Icebreaker ~~#1~~ shall operate outside of a cone with its apex 150 meters behind the stern of the Discoverer, plus and minus 20 degrees from the centerline of the Discoverer, and extending 4,800 meters beyond the bow of the Discoverer. *(9/17/09, Issue 3.1)*

~~6.1~~5.1 For the purpose of Condition N.~~6~~5, the permittee shall use a global positioning system or laser range finder capable of accuracy to within 10 meters.

~~7.~~6. **Attachment to Discoverer.** At no time shall the Icebreaker ~~#1~~ be attached to the Discoverer.

~~8.~~7. **Volume Source Limit for the Icebreaker ~~#1~~.** The permittee shall ensure that the volume source release height of the Icebreaker ~~#1~~ is no less than 25.22 meters.

~~8.1~~7.1 For the purposes of Condition N.~~8~~7, the volume source release height shall be determined by:

~~8.1.1~~7.1.1 The permittee shall obtain the vessel source dimensions and emission source parameters;

~~8.1.2~~7.1.2 The permittee shall determine the volume source release height based on plume rise and by using the following information:

~~8.1.2.1~~7.1.2.1 The SCEEN3 model as set forth in 40 CFR Part 51, Appendix W;

~~8.1.2.2~~7.1.2.2 An hourly meteorological condition of "D stability," as that term is used in 40 CFR Part 51, Appendix W;

~~8.1.2.3~~7.1.2.3 A wind speed of 20 meters per second; and

~~8.1.2.4~~7.1.2.4 The vessel dimensions and emission source parameters required under Condition N.~~8~~7.1.1.

~~8.1.3~~7.1.3 If EPA promulgates a different screening model in place of SCREEN3 in 40 CFR Part 51, Appendix W, the permittee shall use that newly promulgated screening model to determine the volume source release height.

~~9.~~8. **Stack Test Requirements.** Prior to each drilling season while the Discoverer is operating under this permit in the Chukchi Sea, the permittee shall stack test each propulsion engine, and utility generator engine ~~, boiler and incinerator~~ on the Icebreaker ~~#1~~ as follows:

~~9.1~~8.1 Each stack test on the propulsion engines shall be conducted at four different loads: 20%, 40%, 60% and 80%.

~~9.2~~8.2 Each stack test on the utility generator engines shall be conducted at three different loads: 50%, 75% and 100%.

~~9.3Each stack test on the boilers shall be conducted at full loads.~~*(9/17/09, Issue 3.3.3)*

~~9.4Each stack test on the incinerator shall be conducted at full load.~~ *(9/17/09, Issue 3.3.3)*

~~9.5~~8.3 Each stack test run shall test for emissions of NO_x, $PM_{2.5}$ and PM_{10}.

~~9.6~~8.4 During each test run for the propulsion engines, and utility generator engines, ~~and boilers,~~ the permittee shall monitor and record the following information:

~~9.6.1Quantity of fuel used (in gallons);~~

~~9.6.2Density of the fuel used (in lbs/gallon);~~

~~9.6.3Heat content of the fuel used (in Btu/gallon); and~~ *(9/17/09, Issue 2.1 and 4.1)*

~~9.6.4~~8.4.1 For the engines, electrical power output (in kW~~e~~ (electrical output)).

~~9.7During each test run for the incinerator, the permittee shall monitor and record the quantity of waste material incinerated (in lbs).~~ *(9/17/09, Issue 3.3.3)*

~~9.8~~8.5 For each engine, and each pollutant, the permittee shall determine emission factors in the following units: lbs/kW~~e~~ (electrical output)-hr ~~and lbs/gallon~~. *(9/17/09, Issue 2.1)*

~~9.9For each boiler, and each pollutant, the permittee shall determine emission factors in the following units: lbs/MMBtu and lbs/gallon.~~ *(9/17/09, Issue 2.1 and 3.3.3)*

~~9.10For each incinerator, and each pollutant, the permittee shall determine emission factors in the following units: lbs/ton of waste combusted.~~ *(9/17/09, Issue 3.3.3)*

~~10.~~9. Monitoring, Recordkeeping and Reporting. The permittee shall:

~~10.1~~9.1 Equip each of the propulsion engines, and utility generator engines ~~and boilers~~ on board the Icebreaker ~~#1~~ with a ~~diesel fuel flow~~generator power level meter: *(9/17/09, Issue 2.1)*

~~10.1.1Each fuel flow meter shall be located as close as practical to the fuel intake of each engine or boiler;~~ *(9/17/09, Issue 2.1)*

~~10.1.2Each fuel flow meter shall be totalizing and nonresettable; and~~

~~10.1.3~~9.1.1 Each ~~fuel flow~~power meter shall measure the ~~fuel flow rate~~generator power level with accuracy equal to or better than ~~2~~5 percent of the meter's upper range value.

~~10.2~~9.2 No less than 60 days before initial deployment of the Discoverer to the Chukchi Sea for the first drilling season, collect information from the manufacturer of each ~~fuel flow~~power meter so as to determine its accuracy. Submit this information to EPA no less than 30 days prior to operation within the Chukchi Sea.

~~10.3~~9.3 Maintain the accuracy of each ~~fuel flow~~power level meter in accordance with manufacturer's recommendations. *(9/17/09, Issue 2.1)*

~~10.4~~9.4 Monitor and record ~~fuel usage~~power level at least once every 10 minutes for each propulsion engine, and utility generator engine ~~and boiler~~. *(9/17/09, Issue 2.1)*

~~10.5~~9.5 At least 45 days before deployment to the Discoverer each drilling season, the permittee shall notify the EPA of the volume source release height of the Icebreaker ~~#1~~.

~~10.6~~9.6 Once each hour, and using a global positioning system or laser range finder capable of accuracy to within 10 meters, measure and record the date, time and location of the Icebreaker ~~#1~~.

~~10.7~~9.7 Once each hour, monitor and record the date, time, direction of the bow of the Discoverer is pointed, and wind direction at the Discoverer.

~~10.8~~9.8 Record any instance that the Icebreaker ~~#1~~ attaches to the Discoverer.

9.9 Record the time of entry and exit into the region within 25 miles of the Discoverer and determine the total hours per week that the Icebreaker is within the 25-mile region and the Discoverer is also a stationary source. *(9/17/09, Issue 2.1)*

9.10 Prior to initial deployment, calculate the hourly emissions of $PM_{2.5}$ and PM_{10} using the following equation to show Compliance with Conditions N.4.1 and N.4.2: *(9/17/09, Issue 2.1)*

9.10.1 Pollutant Emissions (lb/hr) = maximum propulsion source group hourly emission + maximum utility generators source group hourly emission + maximum boiler source group hourly emission + maximum incinerator hourly emission.

Where:

Maximum propulsion source group hourly emission = propulsion engine emission factor at 80% capacity (lb/kW-hr) x 80% of source group capacity (kW)

Maximum utility generator source group hourly emission = utility generator engine emission factor at 100% capacity (lb/kW-hr) x 100% of source group capacity (kW)

Maximum boiler source group hourly emission = Emissions from Condition N.4.1 and N.4.2

Maximum incinerator hourly emission = Emissions from Condition N.4.1 and N.4.2

~~10.9~~9.11 Each ~~day~~week, calculate and record for the previous calendar ~~day~~week, the emissions of NO_x~~, $PM_{2.5}$ and PM_{10}~~ using the ~~highest~~ emission factors ~~for each tested engine, boiler or incinerator collected under~~determined by Conditions N.8.5~~10.8, N.10.9 and N.10.10~~ and ~~fuel usage data~~kW generated collected under Condition N.~~11.~~9.4 over the time period within that week that the Icebreaker was within the 25-mile region and the Discoverer is a stationary source (Condition N.9.9) as follows:~~, to determine emissions from that source. For the purposes of this condition, the permittee shall assume that the incinerator has been operated continuously at the maximum operating rate, and shall use the highest emission factor collected under Condition N.10.10.~~ *(9/17/09, Issue 2.1)*

9.11.1 Weekly Pollutant Emissions (lbs) = weekly propulsion engine emissions + weekly utility generator engine emissions + weekly boiler emissions + weekly incinerator emissions

Where:

Propulsion and Utility generator engine emissions =

$$\left[\sum_{j=EmissionUnit} \left[\sum_{n=readings} L_{j,n} \times EFE_{j,n} \right] \div m_j \right]$$

j = Emission Unit within Source Group
m_j = number of load readings observed for a given hour for Emission Unit j
n = number of load readings observed during the week for Emission Unit j
$L_{j,n}$ = power output in units of "kilowatts" measured for Emission Unit j during a given time interval during which a load reading is observed
$EFE_{j,n}$ = load-dependent emission factor for each emission unit. in units of "lb pollutant emitted per Kilowatt-hour of power output" from N.8 For emission units not tested, the highest load-dependant emission factor set from all tested emission units within that group (propulsion group or utility generator group) will be used.

Boiler emissions = Total weekly hours recorded in Condition N.9.9 x the boiler hourly emission rate in Condition N.4.3.

Incinerator emissions = Total weekly hours recorded in Condition N.9.9 x the incinerator hourly emission rate in Condition N.4.3.

9.11.2 For the propulsion engines, the measured NO_x emission factor for 20 percent load is used for engine power levels from zero to 30 percent, the NO_x emission factor for 40 percent is to be used for engine power levels between 31 and 50 percent, the NO_x emission factor for 60 percent is to be used for engine power levels between 51 and 70 percent, and the NO_x emission factor for 80 percent is to be used for loads above 70 percent.

9.11.3 For the utility generator engines, the NO_x emission factor for 50 percent load is for engine power levels from zero to 67 percent, the NO_x emission factor for 75 percent load is to be used for engine power levels between 68 and 87 percent, and the NO_x emission factor for 100 percent is to be used for loads at and above 88 percent.

9.12 Each week, calculate and record the annual rolling total of NO_x emissions to determine compliance with Condition N.3.1. *(9/17/09, Issue 2.1)*

O. ~~ICEBREAKER #2~~ANCHOR HANDLER *(9/17/09, Issue 1.1)*

1. Aggregate Capacity Limits. For a given drilling season, the permittee may select either the Tor Viking or Hull 247 ~~any vessel~~ as the Anchor Handler~~Icebreaker #2~~, subject to the following conditions:

~~1.1The total capacity of all propulsion engines and generator engines on Icebreaker #2 shall not exceed 31,200 hp.~~

~~1.2The total capacity of all generator engines on Icebreaker #2 shall not exceed 2,800 hp.~~

~~1.3The total capacity of all boilers on Icebreaker #2 shall not exceed 10 MMBtu/hr.~~

~~1.4The total capacity of all incinerators on Icebreaker #2 shall not exceed 154 lbs/hr.~~

~~1.5~~1.1 Total uncontrolled emissions of $PM_{2.5}$ from all emission sources on board the Anchor Handler~~Icebreaker #2~~ shall not exceed ~~42.2~~11.4 lbs/hour.*(9/17/09, Issue 1.1: Adjustment)*

~~1.5.1For compliance with Condition O.1.5, measurement of $PM_{2.5}$ shall be determined using EPA Method 201/201A and OTM 28, provided, however, that once proposed changes to Method 202 in 56 Fed. Reg. 12970 (March 25, 2009) become final and effective, EPA Method 202 shall be used in lieu of OTM 28.~~ *(Redundant with O.4.2.1)*

~~1.5.2For the purposes of Condition O.1.5, emissions from each emission unit shall be based on operation of that emission unit at 100% of rated capacity, except for the propulsion engines, for which emissions shall be based on operation of that emission unit at 80% of rated capacity.~~ *(Moved to O.4.2.2)*

~~1.6~~1.2 Total uncontrolled emissions of PM_{10} from all emission sources on board the Anchor Handler~~Icebreaker #2~~ shall not exceed ~~48.0~~11.7 lbs/hour.*(9/17/09, Issue 1.1: Adjustment)*

~~1.6.1For compliance with Condition O.1.6, measurement of PM_{10} shall be determined using EPA Method 201/201A and OTM 28, provided, however, that once proposed changes to Method 202 in 56 Fed. Reg. 12970 (March 25, 2009) become final and effective, EPA Method 202 shall be used in lieu of OTM 28.~~ *(Redundant with O.4.1.1)*

~~1.6.2For the purposes of Condition O.1.6, emissions from each emission unit shall be based on operation of that emission unit at 100% of rated capacity, except for the propulsion engines, for which emissions shall be based on operation of that emission unit at 80% of rated capacity.~~ *(Moved to O.4.1.2)*

~~1.7~~1.3 No later than 45 days prior to deployment to the Chukchi Sea each drilling season, the permittee shall provide notification to EPA of the vessel selected as the Anchor Handler~~Icebreaker #2~~. The notification shall include a list of all emission sources on board the vessel as well as manufacturer, model and rated capacity of each emission source.

~~1.8During the drilling season, the permittee may switch the designation of Icebreaker #1 and Icebreaker #2 and relocate the vessels, provided that Icebreaker #1 continues to comply with the distance and location requirements of Condition N.6 until Icebreaker #2 complies with the distance and location requirements of Condition N.6. The permittee shall record the date and time that the designations are switched and provide notification to EPA within 3 business days. Subsequent to the designation switch, each vessel must comply with the requirements of Condition N or O as applicable to its new designation.~~ *(9/17/09, Issue 1.1)*

2. Capacity Limit on ~~Icebreaker #2~~the Anchor Handler Propulsion Engines. At all times while the Discoverer is an OCS Source and ~~Icebreaker #2~~the Anchor Handler is within 25 miles of the Discoverer, the permittee shall limit operation of the propulsion engines ~~in~~on ~~Icebreaker #2~~the Anchor Handler to 80% of rated aggregate capacity.

3. PTE Annual Emission Limits. At all times while the Discoverer is an OCS Source and the Anchor Handler~~Icebreaker #2~~ is within 25 miles of the Discoverer, emissions from all emission ~~sources~~units on the Anchor Handler~~Icebreaker #2 in aggregate~~ shall not exceed the emission limits specified for each of the pollutants below:

3.1 **NO_x:** ~~849.0~~71.0 tons/rolling 12-month period *(9/17/09, Issue 1.1: Adjustment)*

3.1.1 For compliance with Condition O.3.1, measurement of NO_x shall be determined using EPA Method 7E.

4. PTE ~~Daily~~Hourly Emission Limits. At all times while the Discoverer is an OCS Source and Icebreaker #2 is within 25 miles of the Discoverer, emissions from all emission sources on Icebreaker #2 in aggregate shall not exceed the emission limits specified for each of the pollutants below:

4.1 **PM_{10}:** ~~1,152.0~~11.7 lbs/~~day~~hr, total *(9/17/09, Issue 1.1: Adjustment)*

0.10 lb/hr for Boilers

1.01 lb/hr for Incinerators

4.1.1 For compliance of propulsion and utility generators with Condition O.4.1, measurement of PM_{10} shall be determined using EPA Method 201/201A and OTM 28, provided, however, that once proposed changes to Method 202 in 56 Fed. Reg. 12970 (March 25, 2009) become final and effective, EPA Method 202 shall be used in lieu of OTM 28.

4.1.2 For the purposes of Condition O.4.1, emissions from each utility generator engine shall be based on operation of that emission unit at 100% of rated capacity, and emissions from each propulsion engine shall be based on operation of that emission unit at 80% of rated capacity. *(Moved O.1.6.2)*

4.2 **$PM_{2.5}$:** ~~1,012.8~~11.4 lbs/~~day~~hr, total *(9/17/09, Issue 1.1: Adjustment)*

0.10 lb/hr for Boilers

0.69 lb/hr for Incinerators

4.2.1 For compliance of propulsion and utility generators with Condition O.4.2, measurement of $PM_{2.5}$ shall be determined using EPA Method 201/201A and OTM 28, provided, however, that once proposed changes to Method 202 in 56 Fed. Reg. 12970 (March 25, 2009) become final and effective, EPA Method 202 shall be used in lieu of OTM 28.

4.2.2 For the purposes of Condition O.4.2, emissions from each utility generator engine shall be based on operation of that emission unit at 100% of rated capacity, and emissions from each propulsion engine shall be based on operation of that emission unit at 80% of rated capacity. *(Moved O.1.5.2)*

4.3 **NO_x:** 0.21 lb/hr for Boilers

0.38 lb/hr for Incinerators

~~**5.Fuel Usage Limit.** At all times while the Discoverer is an OCS Source and Icebreaker #2 is within 25 miles of the Discoverer, the permittee shall not use in excess of:~~

~~5.15,714,560 gallons of fuel in all of the emission sources on board Icebreaker #2 in aggregate during any rolling 12-month period;~~ *(9/17/09, Issue 3.2)*

~~5.234,015 gallons of fuel in all of the emission sources on board Icebreaker #2 in aggregate during any calendar day;~~ *(9/17/09, Issue 2.1)*

~~6.~~5. Operating Distance from Discoverer. Except when transferring crew and supplies to and from the Discoverer, or as provided for in Conditions O.~~7~~6 and O.~~8~~7, or travelling on other non-icebreaking activities, the Anchor Handler~~Icebreaker #2~~ shall operate outside of a cone with its apex 150 meters behind the stern of the Discoverer, plus and minus 20 degrees from the centerline of the Discoverer, and extending 1,000 meters beyond the bow of the Discoverer. *(9/17/09, Issue 3.1)*

~~6.1~~5.1 For the purpose of Condition O.~~6~~5, the permittee shall use a global positioning system or laser range finder capable of accuracy to within 10 meters.

~~7.~~6. Anchor Handling Operations. Notwithstanding Conditions O.~~6~~5 and O.~~9~~8, the Anchor Handler~~Icebreaker #2~~ may operate within 1,000 meters of the Discoverer while the Anchor Handler~~Icebreaker #2~~ is being used to either set or retrieve anchors for the Discoverer.

~~8.~~7. Bow Washing Operations. Notwithstanding Conditions O.~~6~~5 and O.~~9~~8, the Anchor Handler~~Icebreaker #2~~ may operate within 1,000 meters of the Discoverer while the Anchor Handler~~Icebreaker #2~~ is being used to remove ice from the bow of the Discoverer (i.e. bow washing), subject to the following conditions:

~~8.1~~7.1 During bow washing operations, the Anchor Handler~~Icebreaker #2~~ shall operate such that the closest point of the icebreaker to the closest point on the Discoverer shall not be less than 100 meters;

~~8.2~~7.2 The permittee shall record the date, hour and minute that the Anchor Handler~~Icebreaker #2~~ begins its approach to the Discoverer to remove bow ice;

~~8.3~~7.3 The permittee shall, every 5 minutes after the time in Condition O.~~8~~7.2, record the distance between the Anchor Handler~~Icebreaker #2~~ and the Discoverer, until completion of bow washing operations as specified in Condition O.~~8~~7.4;

~~8.4~~7.4 The permittee shall record the date, hour and minute that the Anchor Handler~~Icebreaker #2~~ returns to its ice management position at least 1,000 meters from the Discoverer;

~~8.5~~7.5 For the purpose of Condition O.~~8~~7, the permittee shall use a global positioning system or laser range finder capable of accuracy to within 10 meters.

~~9.~~8. Attachment to Discoverer. At no time shall the Anchor Handler~~Icebreaker #2~~ be attached to the Discoverer.

~~10.~~9. Volume Source Limit for the Anchor Handler~~Icebreaker #2~~. The permittee shall ensure that the volume source release height of the Anchor Handler~~Icebreaker #2~~ is no less than 25.22 meters.

~~10.1~~9.1 For the purposes of Condition O.~~10~~9, the volume source release height shall be determined by:

~~10.1.1~~9.1.1 The permittee shall obtain the vessel source dimensions and emission source parameters;

~~10.1.2~~9.1.2 The permittee shall determine the volume source release height based on plume rise and by using the following information:

~~10.1.2.1~~9.1.2.1 The SCEEN3 model as set forth in 40 CFR Part 51, Appendix W;

~~10.1.2.2~~9.1.2.2 A hourly meteorological condition of "D stability," as that term is used in 40 CFR Part 51, Appendix W;

~~10.1.2.3~~9.1.2.3 A wind speed of 20 meters per second; and

~~10.1.2.4~~9.1.2.4 The vessel dimensions and emission source parameters required under Condition O.~~10~~9.1.1.

~~10.1.3~~9.1.3 If EPA promulgates a different screening model in place of SCREEN3 in 40 CFR Part 51, Appendix W, the permittee shall use that newly promulgated screening model to determine the volume source release height.

~~11.~~10. Stack Test Requirements. Prior to each drilling season while the Discoverer is operating under this permit in the Chukchi Sea, the permittee shall stack test each propulsion engine~~,~~ and utility generator engine~~, boiler and incinerator~~ on the Anchor Handler~~Icebreaker #2~~ as follows:

~~11.1~~10.1 Each stack test on the propulsion engines shall be conducted at four different loads: 20%, 40%, 60% and 80%.

~~11.2~~10.2 Each stack test on the utility generator engines shall be conducted at three different loads: 50%, 75% and 100%.

~~11.3Each stack test on the boilers shall be conducted at full loads.~~ *(9/17/09, Issue 3.3.3)*

~~11.4Each stack test on the incinerator shall be conducted at full load.~~ *(9/17/09, Issue 3.3.3)*

~~11.5~~10.3 Each stack test run shall test for emissions of NO_x, $PM_{2.5}$ and PM_{10}.

~~11.6~~10.4 During each test run for the propulsion engines, and utility generator engines, ~~and boilers,~~ the permittee shall monitor and record the following information:

~~11.6.1Quantity of fuel used (in gallons);~~

~~11.6.2Density of the fuel used (in lbs/gallon);~~

~~11.6.3Heat content of the fuel used (in Btu/gallon); and~~ *(9/17/09, Issue 4.1)*

~~11.6.4~~10.4.1 For the engines, electrical power output (in kW~~e~~(electrical output)).

~~11.7During each test run for the incinerator, the permittee shall monitor and record the quantity of waste material incinerated (in lbs).~~ *(9/17/09, Issue 3.3.3)*

~~11.8~~10.5 For each engine, and each pollutant, the permittee shall determine emission factors in the following units: lbs/kW~~e~~(electrical output)-hr~~ and lbs/gallon~~. *(9/17/09, Issue 2.1)*

~~11.9For each boiler, and each pollutant, the permittee shall determine emission factors in the following units: lbs/MMBtu and lbs/gallon.~~ *(9/17/09, Issue 3.3.3)*

~~11.10For each incinerator, and each pollutant, the permittee shall determine emission factors in the following units: lbs/ton of waste combusted.~~ *(9/17/09, Issue 3.3.3)*

~~12.~~11. Monitoring, Recordkeeping and Reporting. The permittee shall:

~~12.1~~11.1 Equip each of the propulsion engines, and utility generator engines~~ and boilers~~ on board the Anchor Handler~~Icebreaker #2~~ with a ~~diesel fuel flow~~generator power level meter: *(9/17/09, Issue 2.1)*

~~12.1.1Each fuel flow meter shall be located as close as practical to the fuel intake of each engine or boiler;~~

~~12.1.2Each fuel flow meter shall be totalizing and nonresettable; and~~

~~12.1.3~~11.1.1 Each ~~fuel flow~~power meter shall measure the ~~fuel flow rate~~generator power level with accuracy equal to or better than ~~2~~5 percent of the meter's upper range value.

~~12.2~~11.2 No less than 60 days before initial deployment of the Discoverer to the Chukchi Sea for the first drilling season, collect information from the manufacturer of each ~~fuel flow~~power meter so as to determine its accuracy. Submit this information to EPA no less than 30 days prior to operation within the Chukchi Sea.

~~12.3~~11.3 Maintain the accuracy of each ~~fuel flow~~power level meter in accordance with manufacturer's recommendations.

~~12.4~~11.4 Monitor and record ~~fuel usage~~power level at least once every 10 minutes for each propulsion engine, and utility generator engine~~ and boiler~~. *(9/17/09, Issue 2.1)*

~~12.5~~11.5 At least 45 days before deployment to the Discoverer each drilling season, the permittee shall notify the EPA of the volume source release height of the Anchor Handler~~Icebreaker #2~~.

~~12.6~~11.6 Once each hour, and using a global positioning system or laser range finder capable of accuracy to within 10 meters, measure and record the date, time and distance from the closest point of the Anchor Handler~~Icebreaker #2~~ to the closest point on the Discoverer.

~~12.7~~11.7 Once each hour, monitor and record the date, time and wind direction at the Anchor Handler~~Icebreaker #2~~.

~~12.8~~11.8 Record any instance that the Anchor Handler~~Icebreaker #2~~ attaches to the Discoverer.

11.9 Record the time of entry and exit into the region within 25 miles of the Discoverer and determine the total hours per week that the Anchor Handler is within the 25-mile region and the Discoverer is also a stationary source. *(9/17/09, Issue 2.1)*

11.10 Prior to initial deployment, calculate the hourly emissions of $PM_{2.5}$ and PM_{10} using the following equation to show Compliance with Conditions O.4.1 and O.4.2: *(9/17/09, Issue 2.1)*

11.10.1 Pollutant Emissions (lb/hr) = maximum propulsion source group hourly emission + maximum utility generators source group hourly emission + maximum boiler source group hourly emission + maximum incinerator hourly emission.

Where:

Maximum propulsion source group hourly emission = propulsion engine emission factor at 80% capacity (lb/kW-hr) x 80% of source group capacity (kW)

Maximum utility generator source group hourly emission = utility generator engine emission factor at 100% capacity (lb/kW-hr) x 100% of source group capacity (kW)

Maximum boiler source group hourly emission = Emissions from Condition O.4.1 and O.4.2

11.10.2 Maximum incinerator hourly emission = Emissions from Condition O.4.1 and O.4.2

11.11 Each ~~day~~week, calculate and record for the previous calendar ~~day~~week, the emissions of NO_x~~, $PM_{2.5}$ and PM_{10}~~ using the ~~highest~~ emission factors ~~or each tested engine, boiler or incinerator, collected under~~determined by Conditions O.10.5~~12.8, O.12.9 and O.12.10~~ and ~~fuel usage data~~kW generated collected pursuant to Condition O.~~12~~11.4 over the time period within that week that the Anchor Handler was within the 25-mile region and the Discoverer is a stationary source (Condition O.11.9) as follows:~~to determine emissions from that source. For the purposes of this condition, the permittee shall assume that the incinerator has been operated continuously at the maximum operating rate, and shall use the highest emission factor collected under Condition O.12.10.~~ *(9/17/09, Issue 2.1)*

11.11.1 Weekly Pollutant Emissions (lbs) = weekly propulsion engine emissions + weekly utility generator engine emissions + weekly boiler emissions + weekly incinerator emissions

Where:

Propulsion and Utility generator engine emissions =

$$\left[\sum_{j=EmissionUnit} \left[\sum_{n=readings} L_{j,n} \times EFE_{j,n} \right] \div m_j \right]$$

j = Emission Unit within Source Group
m_j = number of load readings observed for a given hour for Emission Unit j
n = number of load readings observed during the week for Emission Unit j
$L_{j,n}$ = power output in units of "kilowatts" measured for Emission Unit j during a given time interval during which a load reading is observed
$EFE_{j,n}$ = load-dependent emission factor for each emission unit. in units of "lb pollutant emitted per Kilowatt-hour of power output" from Condition O.10.5 For emission units not tested, the highest load-dependant emission factor set from all tested emission units within that group (propulsion group or utility generator group) will be used.

Boiler emissions = Total weekly hours recorded in Condition O.11.9 x the boiler hourly emission rate in Condition O.4.3.

Incinerator emissions = Total weekly hours recorded in Condition O.11.9 x the incinerator hourly emission rate in Condition O.4.3.

11.11.2 For the propulsion engines, the measured NO_x emission factor for 20 percent load is used for engine power levels from zero to 30 percent, the NO_x emission factor for 40 percent is to be used for engine power levels between 31 and 50 percent, the NO_x emission factor for 60 percent is to be used for engine power levels between 51 and 70 percent, and the NO_x emission factor for 80 percent is to be used for loads above 70 percent.

11.11.3 For the utility generator engines, the NO_x emission factor for 50 percent load is for engine power levels from zero to 67 percent, the NO_x emission factor for 75 percent load is to be used for engine power levels between 68 and 87 percent, and the NO_x emission factor for 100 percent is to be used for loads at and above 88 percent.

11.12 Each week, calculate and record the annual rolling total of NO_x emissions to determine compliance with Condition O.3.1. *(9/17/09, Issue 2.1)*

~~**13.One Icebreaker Scenario.** In the event Shell elects to deploy only one icebreaker instead of two icebreakers, the icebreaker deployed shall be considered Icebreaker #2 and shall comply with Conditions O.1 through O.12.~~ *(9/17/09, Issue 1.1)*

P. SUPPLY SHIP

1. Capacity Limit on Supply Ship Propulsion Engines. At all times while the Discoverer is an OCS source and the supply ship is within 25 miles of the Discoverer, the permittee shall limit operation of the propulsion engines in the supply ship to no greater than 80% of rated capacity.

2. Volume Source Limit for Supply Ship. The permittee shall ensure that the volume source release height of the supply ship is no less than 15.24 meters.

2.1 For the purposes of Condition P.2, the volume source release height shall be determined by:

2.1.1 The permittee shall obtain the vessel source dimensions and emission source parameters;

2.1.2 The permittee shall determine the volume source release height based on plume rise and by using the following information:

2.1.2.1 The SCEEN3 model as set forth in 40 CFR Part 51, Appendix W;

2.1.2.2 A hourly meteorological condition of "D stability," as that term is defined in 40 CFR Part 51, Appendix W;

2.1.2.3 A wind speed of 20 meters per second; and

2.1.2.4 The vessel dimensions and emission source parameters required under Condition P.3.1.1.

2.1.3 If EPA promulgates a new screening model in place of SCREEN3 in 40 CFR Part 51, Appendix W, the permittee shall use that newly promulgated screening model to determine the volume source release height.

3. Monitoring, Recordkeeping and Reporting. The permittee shall:

3.1 At all times while the Discoverer is an OCS source and the supply ship is within 25 miles of the Discoverer, monitor the power output of each propulsion engine on the supply ship at least once every 15 minutes.

3.1.1 The monitored power output shall be recorded as a direct readout value as well as a percentage of the rated capacity of each engine.

3.2 At least 45 days before deployment to the Discoverer each drilling season, the permittee shall notify the EPA of the volume source release height.

3.3 For each trip to the Discoverer while the Discoverer is an OCS Source, the permittee shall record the following:

3.3.1 The date and time that the supply ship came within 25 miles of the Discoverer; and

3.3.2 After the delivery to the Discoverer, the date and time that the supply ship was no longer within 25 miles of the Discoverer;

Q. OIL SPILL RESPONSE FLEET

1. Operation of Catalyzed Diesel Particulate Filter (CDPF). At all times that any of the Nanuq propulsion engines (Units N-1 -2) or Nanuq generators (Units N-3 – 4) are in operation, the exhaust from each Unit shall be directed to an operating CDPF.

1.1 Each CDPF shall be equipped with an operating monitor and alarm unit, that records exhaust pressure and temperature.

1.2 During each day that each of Units N-1 -4 is operated, the exhaust temperature shall be above 300°C, or 572°F, for at least 30% of the time. *(9/17/09, Issue 1.2)*

~~1.~~2. PTE Annual NO_x Emission Limits. At all times while the Discoverer is an OCS source and the Nanuq is within 25 miles of the Discoverer, emissions of NO_x from operation of the Nanuq propulsion engines (Units N-1 -2) and Nanuq generators(Units N-3 – 4) shall not exceed the emission limits specified below:

~~1.1~~2.1 Nanuq propulsion engines (Units N-1 -2): ~~61.16~~118.61 tons/rolling 12-month period*(9/17/09, Issue 1.2: Adjustment)*

Nanuq generators(Units N-3 – 4): ~~108.18~~53.40 tons/rolling 12-month period*(9/17/09, Issue 1.2: Adjustment)*

~~1.1.1~~2.1.1 For compliance with Condition Q.~~1~~2.1, measurement of NO_x shall be determined using EPA Method 7E.

~~2.~~3. Fuel Usage Limit. At all times while the Discoverer is an OCS source and the Nanuq is within 25 miles of the Discoverer, the permittee shall not use in excess of:

~~2.1259,896 gallons of fuel in the Nanuq propulsion engines (Units N-1 - 2) in aggregate during any rolling 12-month period; (9/17/09, Issue 3.2)~~

~~2.2272,496 gallons of fuel in the Nanuq generator engines (Units N-3 – 4) in aggregate during any rolling 12-month period; (9/17/09, Issue 3.2)~~

~~2.3~~3.1 ~~1,547~~3,000 gallons of fuel in the Nanuq propulsion engines (Units N-1 - 2) in aggregate during any calendar day; *(9/17/09, Issue 1.2)*

~~2.4~~3.2 ~~1,622~~800 gallons of fuel in the Nanuq generator engines (Units N-3 – 4) in aggregate during any calendar day; *(9/17/09, Issue 1.2)*

~~3.~~4. Operating Distance from Discoverer. Except for transport of crew and supplies to and from the Discoverer or when responding to an oil spill, the oil spill response fleet shall operate such that the closest point of the fleet to the closest point on the Discoverer shall not be less than 2,000 meters.

~~3.1~~4.1 For the purpose of Condition Q.~~3~~4, the permittee shall use a global positioning system or laser range finder capable of accuracy to within 10 meters.

~~4.~~5. Operating Location. Except for transport of crew and supplies to and from the Discoverer or when responding to an oil spill, the oil spill response fleet shall operate at a location that is downwind from the Discoverer.

~~5.~~6. Attachment to Discoverer. At no time shall the Nanuq or any of the Kvichak work boats be attached to the Discoverer.

~~**6.Stack Test Requirements.** Prior to each of the first two drilling seasons while the Discoverer is operating under this permit in the Chukchi Sea, the permittee shall stack test at least one of the Nanuq propulsion engines (Units N-1 – 2) and one of the Nanuq generator engines (Units N-3 – 4) as follows:~~

~~6.1At the end of two drilling seasons that the Discoverer operates under this permit in the Chukchi Sea, all of Units N-1 – 4 shall have been stack tested under the requirements of this section.~~

~~6.2Each stack test shall be conducted at four different loads: 25%, 50%, 75% and 100%.~~

~~6.3Each stack test run shall test for emissions of NO_x.~~

~~6.4During each test run, the permittee shall monitor and record the following information:~~

~~6.4.1Quantity of fuel used (in gallons);~~

~~6.4.2Density of the fuel used (in lbs/gallon);~~

~~6.4.3Heat content of the fuel used (in Btu/gallon); and~~

~~6.4.4Electrical power output (in kWe).~~

~~6.5For each engine, and each pollutant, the permittee shall determine emission factors in the following units: lbs/kWe-hr and lbs/gallon.~~

7. Monitoring, Recordkeeping and Reporting. The permittee shall measure combined unit daily fuel consumption on Units FD-N-1 – 2 and Units FD-N-3 – 4 to an accuracy of 5 percent of maximum daily consumption. This can be performed by either tank gauging or in-line fuel flow meters.~~:~~ *(9/17/09, Issue 2.2)*

~~7.1Equip each of Units FD-N-1 – 4 with a diesel fuel flow meter:~~

~~7.1.1Each fuel flow meter shall be located as close as practical to the fuel intake of the boiler;~~

~~7.1.2Each fuel flow meter shall be totalizing and nonresettable; and~~

~~7.1.3Each fuel flow meter shall measure the fuel flow rate with accuracy equal to or better than 2 percent of the meter's upper range value.~~

~~7.2~~7.1 No less than 60 days before initial deployment of the Discoverer to the Chukchi Sea for the first drilling season, demonstrate a fuel tank measurement system that meets 5 percent accuracy of daily fuel consumption, or collect information from the manufacturer of each fuel flow meter so as to determine its accuracy. Submit this information to EPA no less than 30 days prior to operation within the Chukchi Sea.

~~7.3Maintain the accuracy of each fuel flow meter in accordance with manufacturer's recommendations.~~

~~7.4~~7.2 Monitor and record fuel usage for each propulsion and generator engine (Units N-1 -2 and Units N-3 – 4) on a daily basis.

7.3 Monitor the exhaust temperature of each engine by use of the monitor and alarm unit, whenever the engine is in operation.

7.4 Each day, calculate and record for the previous calendar day, the percent of operational time for each engine that the exhaust temperature was above 300°C (572°F).

7.5 Once each hour, and using a global positioning system or laser range finder capable of accuracy to within 10 meters, measure and record the location of the Nanuq and the distance from the closest point of the oil spill response fleet to the closest point on the Discoverer.

7.6 Once each hour, monitor and record the wind direction at the Discoverer.

7.7 Record any instance that the Nanuq or Kvichak work boats attach to the Discoverer.

~~7.8Each day, calculate and record for the previous calendar day, the emissions of NO_x, using the highest emission factor for each tested engine collected under Condition Q.6.5 and fuel usage data collected under Condition Q.7.4.~~

R. POST-CONSTRUCTION AMBIENT AIR QUALITY MONITORING *(9/17/09, Issue 4.4)*

1. Ambient Air Quality Monitoring Station. The permittee shall install, operate and maintain a Federal Reference Method or Federal Equivalent Method ambient air quality monitoring station to measure and record $PM_{2.5}$ concentration data in accordance with EPA, 1984a: *Ambient Monitoring Guidelines for Prevention of Significant Deterioration (PSD)*, EPA-450/4-87-007, May 1987, U.S. Environmental Protection Agency, Research Triangle Park, NC.

1.1 An alternative $PM_{2.5}$ monitoring station may be used in lieu of the required monitoring station provided that approval of the monitoring station is obtained from EPA. The currently installed Wainwright station satisfies this requirement if operated in accordance with the remaining conditions herein~~;~~

1.2 The monitoring period shall commence within 120 days after the final permit is issued and shall continue for a minimum of 1 year after commencement of initial operation of the Discoverer in the Chukchi Sea as an OCS Source;

1.3 The data recovery shall be at least 80% percent of the data possible during the monitoring period; and

1.4 The monitoring station shall continue to operate and record data for three years or until such time that written approval is obtained from EPA authorizing the termination of its operation, whichever comes first.

2. **Meteorological Monitoring Station.** The permittee shall install, operate and maintain a meteorological monitoring station to monitor and record data in accordance with EPA, 1984a: *Ambient Monitoring Guidelines for Prevention of Significant Deterioration (PSD),* EPA-450/4-87-007, May 1987, U.S. Environmental Protection Agency, Research Triangle Park, NC.

2.1 An alternative meteorological monitoring station may be used in lieu of the required monitoring station provided that approval of the monitoring station is obtained from EPA. The currently installed Wainwright station satisfies this requirement if operated in accordance with the remaining conditions herein;

2.2 Data shall include horizontal wind direction and speed, temperature, solar radiation and temperature difference;

2.3 Each quarter's data recovery must be at least 90% percent of the data possible for each variable measured during the monitoring period;

2.4 The monitoring period shall commence within 120 days after the final permit is issued and shall continue for a minimum of 1 year after commencement of operation of the OCS source; and

2.5 The monitoring station shall continue to operate and record data for three years or until such time that written approval is obtained from EPA authorizing the termination of its operation, whichever comes first.

3. **Ambient Air Quality and Meteorological Monitoring Plan.** At least 60 days prior to the commencement of the data collection, the permittee shall submit to EPA for approval an ambient air quality and meteorological monitoring plan for the post-construction monitoring requirements specified in Conditions R.1 and R.2 in accordance with the requirements of 40 CFR Part 58, Appendix A "Quality Assurance Requirements for SLAMS, SPMs and PSD Air Monitoring." The plan shall include a description of the proposed monitoring site.

4. **Monthly Reporting.** Within ~~30~~45 days after the end of each calendar month, the permittee shall submit to EPA a printed summary of the $PM_{2.5}$ and meteorological monitoring data collected during the prior calendar month.

5. **Audit Reports.** The permittee shall submit audit reports within ~~30~~45 days after the following events:

5.1 Completion of the post-installation equipment audit;

5.2 Completion of independent performance and system audits;

5.3 Completion of quarterly audits required for ambient air quality data collection system; and

5.4 Completion of the semi-annual audits required for the meteorological data collection system.

Quarterly and semi-annual audit periods shall be based on a calendar year.

6. **Quarterly and/or Annual Report.** Within 60 days after the end of each quarter or calendar year and following completion of the collection of monitoring, the permittee shall submit to EPA ~~annual/~~final reports in text, tabular, and graphic forms, including data in digitized format. The digitized formats of the measured air quality and meteorological data shall be in ASCII format and AIRS format.

7. **System and Performance Audit Report.** Within 60 days after completion of data collection, the permittee shall also submit the final report for the system and performance audits required prior to monitoring termination.

From: Kirk Winges
Sent: Wednesday, December 02, 2009 1:43 PM
To: 'Nair.Pat@epamail.epa.gov'
Cc: Eric Hansen; Mark Schindler; Rodger Steen; Susan Childs
Subject: Revised CO Analysis

Hi Pat:

In our conversation between you, Sabrina and me, we concluded that the CO emission factor used for the Hull247 emission inventory (and modeling) in the Chukchi analysis was based on the non-road Tier 2 emission regulations of 3.5 g/kW-hr. However, there is a separate Tier 2 emission factor for Marine engines of 5.0 g/kW-hr. I agreed to take a look at the effect on emissions and air quality modeling if the larger emission factor were to be used. The conclusion of my analysis is as follows:

1. Attached is a revised emission spreadsheet. It shows total hourly emissions for CO increased from 423.31 lb/hr to 486.83 lb/hr.
2. Also attached are the original and revised runs for 1-hour CO concentrations. The increase in CO concentration is minimal, from 394.7 ug/m3 to 396.6 ug/m3.

Since the level of significance for 1-hour and 8-hour CO concentrations are 2000 ug/m3 and 500 ug/m3, respectively, there is no change in the findings of the air quality analysis.

Kirk Winges | Principal Consultant
ENVIRON International Corporation
19020 33rd Avenue W, Suite 310
Lynnwood, WA 98036
V: 425.412.1813 | F: 425.412.1840

This message contains information that may be confidential, privileged or otherwise protected by law from disclosure. It is intended for the exclusive use of the Addressee(s). Unless you are the addressee or authorized agent of the addressee, you may not review, copy, distribute or disclose to anyone the message or any information contained within. If you have received this message in error, please contact the sender by electronic reply to email@environcorp.com and immediately delete all copies of the message.

Shell Gulf of Mexico Inc.
3601 C Street, Suite 1000
Anchorage, AK 99503

Shell Chukchi OCS Air Permit
EPA Region 10
1200 6th Ave. Ste. 900, AWT-107
Seattle, WA 98101

September 17, 2009

Re: Shell Gulf of Mexico Inc. comments on the August 2009 Proposed Discoverer / Chukchi OCS/PSD Permit to Construct

Dear EPA,

Shell Gulf of Mexico Inc. provides the attached initial comments on the above-referenced permit. These comments consist of requested technical changes in the permit. These changes include tighter restrictions on several emissions units, together with necessary increases in the use of some other emissions units. The net effect of these technical changes would be to *reduce* net emissions and impacts, providing greater assurance of compliance with Clean Air Act requirements under an even more conservative permit.

Additionally, these technical changes include modified methods for compliance demonstration on some emission units, which are more feasible than, and at least as reliable as, those in the proposed permit, as well as removal of some redundant compliance requirements. Finally these technical changes include several miscellaneous requests that would make the permit more workable and which have no adverse impact on the stringency of the permit or the compliance assurance it provides.

Shell requests that the Agency make these comments available, and also including the third quarter Wainwright data report, for public review and comment by posting them on its Chukchi Sea Air Permit webpage, as well as making them available for discussion by participants in upcoming public hearings in Alaska. In the near future we will be providing EPA with a version of the proposed permit showing suggested revisions in "track changes" mode to demonstrate how we believe the requested technical changes could be expressed in the final permit. We remain available to EPA to discuss or expand on any of these comments.

Sincerely,

Susan Childs

Attachment

cc: *Lance Tolson*
Keith Craik
Nicole St Amand
Rick Fox
Mark Schindler – Octane LLC.
Rodger Steen – Air Sciences Inc.
Eric Hansen – Environ International
Jeffrey Walker - Minerals Management Service

Shell Gulf of Mexico Inc.
Comments on the August 2009 EPA Permit R10OCS/PSD-AK-2009-01
September 17, 2009

1.0 EMISSION UNIT MODIFICATIONS TO REDUCE NET EMISSIONS

In the time since the application was submitted in December 2008, and more recently in order to provide additional assurance that the project will meet air quality standards and increments, Shell has developed several technical changes to the project's operations. Most of these operational changes reduce emissions and overall the permit changes would result in a substantial net decrease in emissions and impacts. These modifications, which should be reflected in the final permit, include:

1.1 Anchor Handler

Conditions N and O (and Tables 2 and 3 on page 4) of the proposed permit identify and authorize emissions from two generic icebreakers with identical emissions factors. The proposed permit allows Shell to designate for a given drilling season one icebreaker as "Icebreaker #1", the principal ice management vessel, and the other as "Icebreaker #2", which would also be authorized to perform anchor handling and bow washing duties. Under some circumstances, Shell could change the designation during the drilling season, Conditions N.1 & O.1. Instead, Shell intends at all times to use as its anchor handler (Icebreaker #2) either the Tor Viking or its Hull 247, both of which will have substantially lower emissions than the generic icebreaker. Shell will therefore forgo the flexibility to use the ice management vessels interchangeably.

The Tor Viking is a vessel built in 2000 and the Hull 247 is an ECO-owned, Shell-specified and chartered vessel, scheduled to be completed by 2012. Both of these vessels have, or will have, late model diesel engines with selective catalytic reduction (SCR) to control nitrogen oxides (NO_x) emissions. Hull 247 will use Tier 4 engine technology and its emissions will meet Tier 4 emission standards. From Shell's May 29, 2009 submission[1], the anchor handler emissions contributed 20 percent to the NO_x maximum annual impact and eight percent to the $PM_{2.5}$ 24-hour maximum impact. These lower anchor handler emissions will reduce impacts substantially. For the emission calculations provided in these comments, the emissions from both anchor handler vessels are calculated and the higher of the two values on a pollutant-by-pollutant basis is used for the tables below and the associated impact evaluation. The emissions and calculations, with references, are provided in Attachment A. Impact details are presented in Attachment B. Annual and 24-hour emissions comparisons are given below.

1 Childs, Susan; Updated Attachments D and E - Response to EPA Region 10 March 12, 2009 2nd Letter of Incompleteness, May 29, 2009

Table 1: Decrease in Annual Anchor Handler Potentials to Emit (tons per year)

	NO_x	PM_{10}	$PM_{2.5}$	SO_2	CO	VOC
Application emissions	850	97	85	84	345	69
New emissions	71	24	23	82	345	50
Decrease	779	73	62	2	0.56	20
Percent Decrease	92%	76%	73%	2%	0.16%	28%

Table 2: Decrease in 24-hour Anchor Handler Potentials to Emit (pounds per day)

	NO_x	PM_{10}	$PM_{2.5}$	SO_2	CO	VOC
Application emissions	26,608	1,153	1,013	999	4,112	823
New emissions	2,203	281	273	976	4,105	590
Decrease	24,405	872	740	23	7	233
Percent Decrease	92%	76%	73%	2%	0.16%	28%

With this restriction, Shell requests that the final permit remove the interchangeability provisions and instead specifically identify the Tor Viking or Hull 247 as Icebreaker #2, and that the final permit decouple compliance between the icebreaker (Icebreaker #1) and the anchor handler (Icebreaker #2) by removing the aggregate emissions and fuel use clauses. Icebreaker #1 will be subject to specific emissions limits instead of limits on emissions "in aggregate" with emissions from both icebreakers under proposed Conditions N.3 and N.4. These specific limits would be 50 percent of previous "aggregate" limits as follows: NO_x: 1699 tons per year (aggregate) reduced to 850 tons per year (Condition N.3.1); PM_{10}: 2,304 lbs/day (aggregate) reduced to 1,153 lb/day (Condition N.4.1); $PM_{2.5}$: 2,025.7 lb/day (aggregate) reduced to 1,013 lb/day (Condition N.4.2). The associated fuel limit decreases would be from 11,429,120 gallons per year to 5,714,560 gallons per year (Condition N.5.1) and 68,030 gallons per day to 34,015 gallons per day (Condition N.5.2). As shown in the tables above, emissions from the Anchor Handler (Icebreaker # 2) would be limited to far below 50 percent of the proposed two-vessel aggregate, resulting in a substantial overall reduction in emissions.

1.2 Nanuq

The application mistakenly described the Nanuq propulsion engine sizes. As a result, the rating identified in Table 5 on page 4 of the proposed permit is incorrect. The Caterpillar 3608 engines are rated at 2710 kW, not 2710 hp, and with this, the hourly power output increases by a factor of 1.34. The "Rating" entry in Table 5 for emission units N-1 and N-2 should be modified accordingly. Condition Q.2 of the proposed permit imposes fuel usage limits on the Nanuq when it operates within 25 miles of the Discoverer. Further analysis indicates that the energy production limitation on the Nanuq's propulsion engines in Condition Q.2.3 was unrealistically low. Shell requests that the daily limitation be modified from 1547 gallons per day to 47,000 kW-hr/day, which is 3000 gallons per day as translated to a daily fuel use limit. To offset this increase, Shell requests that the final permit reduce the allowance for generator engines in Condition Q.2.4 from 1,622 gallons per day to 800 gallons per day (11,350 kW-hr/day). The Nanuq will also be installing Catalyzed Diesel Particulate Filters (CDPF) on its two propulsion and two utility generators, and these controls should be required by the final permit. The net estimated effect of these changes is shown in the tables below. The emission calculations and assumption references are provided in Attachment A.

Table 3: Decrease in Annual Nanuq Potentials to Emit (tons per year)

	NO_x	PM_{10}	$PM_{2.5}$	SO_2	CO	VOC
Application emissions	169.8	10.6	8.5	7.8	55.3	19.6
New emissions	172.4	2.5	1.9	0.4	39.1	13.6
Decrease	-2.6	8.1	6.6	7.4	16.2	6.0
Percent Decrease	-1.5%	76%	78%	95%	29%	30%

Table 4: Decrease in 24-hour Nanuq Potentials to Emit (pounds per day)

	NO_x	PM_{10}	$PM_{2.5}$	SO_2	CO	VOC
Application emissions	2,022	126.5	100.9	92.8	658.7	233.4
New emissions	2,052	29.8	22.1	4.6	465.9	161.8
Decrease	-30	97	79	88	193	72
Percent Decrease	-1.5%	76%	78%	95%	29%	30%

As can be seen from these tables, annual emissions of all criteria pollutants except NO_x are decreased. The increase in NO_x is 2.6 tons per year, which is well below the 779 tpy decrease from the anchor handler, discussed above. Similarly, 24-hour emissions of all criteria pollutants except NO_x are decreased. The increase in NO_x is 30.4 lb., which is well below the 24,405 lb. decrease from the anchor handler. In sum, these requested revisions represent relatively minor adjustments to the operations authorized by the proposed permit, but provide substantial reductions for certain authorized emissions.

1.3 Discoverer Emergency Generator

Conditions E.1.1 and E.1.2 of proposed permit limits operation of the Discoverer's emergency generator to not longer than 20 minutes during any one hour, on any one day. Shell has become aware that U.S. Coast Guard regulations require exercising the emergency generator under load for two hours once per month (46 C.F.R. 97.15-30(b)). The final permit should be revised accordingly to allow compliance with these regulations. Two hours of operation of the emergency generator at a $PM_{2.5}$ emissions rate of 0.03 lb/hour would slightly increase emissions from the generator, but Shell will accept an offsetting decrease in the fuel use limits for cementing unit/logging winches (FD 16 – 20) from 345 gallons per day to 320 gallons per day in Condition I.6.2. This reduction more than offsets the small emergency generator increase in $PM_{2.5}$ emissions, so there is no net effect on impacts. Details and references for assumptions made for this emission calculation is provided in Attachment A.

1.4 Discoverer Incinerator and HPU units

Shell will further decrease its emissions by accepting tighter restrictions on waste throughput limits for the Discoverer incinerator (Unit FD-23). Condition K.6.2 of the proposed permit would authorize incineration of up to 1,525 lb/day of waste material. Shell requests that the final permit reduce this limit to 1,300 lb per day on any day when no HPU unit is used. On days when the Discoverer uses the fuel equivalent of up to one HPU unit operating at capacity for 24 hours (352 gallons per day) it would limit its incineration to 800 lb; and on days when HPU usage is greater than the equivalent of one (greater HPU fuel consumption than 352 gallons per day), it would limit incineration to 300 lb. Each of these throughput restrictions, in combination with the corresponding level of emissions from the HPU unit(s) will result in lower net emissions than would operation of the incinerator at 1,525 lb/day and with the HPU units operating, as currently proposed. Details and references for assumptions made for these emission calculations are provided in Attachment A.

1.5 Effect on Impacts

Although all pollutant impacts discussed within this Section 1 will decrease (except CO, which will increase a small amount) with these updates, it is primarily the 24-hour $PM_{2.5}$ and annual NO_x impacts that are of interest because they were closest to the NAAQS and PSD increment, respectively. The 24-hour maximum $PM_{2.5}$ impact from the Discoverer project is 18.4 $\mu g/m^3$ and

the maximum annual NO_x impact is 18.2 µg/m^3 or less. Both occur at the same locations as in the May 29, 2009 impact analysis. Although baseline 24-hour $PM_{2.5}$ is not clearly defined, even if Wainwright data is considered representative of the maximum baseline offshore, Wainwright $PM_{2.5}$ concentrations could be as high as 17 µg/m^3 – above any observed measurement at that location – and the operation would still be within the NAAQS. Maximum Wainwright measured 24-hour $PM_{2.5}$ concentration, since November 2008, including the data through July 2009 is 14 ug/m^3. The maximum NO_x impact is 73 percent of the PSD increment of 25 µg/m^3, which is also 12 percent less than the impact that would be authorized under the proposed permit. The table below summarizes these updated results.

Table 5: Comparison of Updated Impact Results to Previous Impact Results

Pollutant	Averaging Time	No Background		
		Current Impact Max. [1]	Updated Impact Max. [2]	Difference (%)
Nitrogen Dioxide (NO_2)	Annual	20.8	18.2	-12
Particulate Matter ($PM_{2.5}$)	24-hour	25.6	18.4	-28
	Annual	1.7	1.3	-24
Particulate Matter (PM_{10})	24-hour	28.2	19.4	-31
	Annual	1.9	1.4	-26
Sulfur Dioxide (SO_2)	3-hour	74.0	68.8	-7
	24-hour	28.0	26.8	-4
	Annual	2.1	2.0	-3
Carbon Monoxide (CO)	1-hour	391.2	394.7	1
	8-hour	352.0	355.2	1

[1] From the July 26, 2009 modeling submittal
[2] Highest of the three new modeling scenarios

2.0 MODIFICATION OF COMPLIANCE CONDITIONS FOR PRACTICABILITY AND COMPLIANCE ASSURANCE

2.1 Load monitoring instead of fuel monitoring on generators

Certain conditions in the proposed permit limit, or are derived from, generator fuel usage, and their associated monitoring provisions rely on monitoring fuel consumption. See Conditions C.5, C7.1 through 7.4, C.7.8, C.7.9, N.5, N.9.6.1 through 3, N.9.8, N.9.9, N.10.1.1, N.10.3, N.10.4, O.5, O.11.6, O.11.8, O.12.1, O.12.4, Q.2, Q.6.4, Q.7.1, Q.7.8. The generators covered by these conditions, however, are equipped with systems that allow for more direct emissions monitoring. The primary generators on the Discoverer, the propulsion generators on the Tor Viking, Hull 247, the currently contracted Vladimir Ignatjuk (VI) as 2010 icebreaker, and Nanuq are equipped with a modern and high quality load monitoring and logging system. These systems log the power of the individual engines on a frequency equal to or greater than once every 10 minutes, and some were installed in anticipation of operating under the previous EPA-issued Kulluk (R10OCS-AK-07-01) and EPA-proposed Discoverer (R10OCS-AK-07-02) minor source permits. These monitoring systems are accurate, are capable of calculating emissions on a 10-minute frequency (by matching load-based emission factors with measured load) and do not involve new and cumbersome fuel monitoring equipment. Shell requests that these be the compliance monitoring systems for this permit. As shown in the emission inventory, emission factors are routinely provided in the form of mass per unit of energy output, as Shell is requesting here, and are used routinely in other permits. This type of monitoring system is more reliable and accurate than fuel monitoring and allows for the calculation of emissions as a function of load, so provides a higher level of compliance assurance for the emissions limits that apply to these sources.

This method of calculating emissions is presented in full detail in the Kulluk permit and is programmed into the ship load monitors, ready for use. Before the end of the public comment period Shell will provide specific revised conditions that would implement a load monitoring approach to compliance assurance in place of the fuel monitoring approach in the proposed permit. The requested revisions will not alter the fact that the permit will require Shell to monitor certain parameters in order to assure compliance with underlying emission limits; it will merely provide a better alternative for doing so.

2.2 Smaller engines – fuel consumption by flow meter or tank measurement

The following monitoring, recordkeeping and reporting conditions in the proposed permit unnecessarily require continuous fuel flow metering exclusively: Conditions F.6, G.8, H.8, I.8, J.6, N.10, O.12, and Q.7. These monitoring requirements are associated with fuel use limits for small combustion units, which all impose daily or yearly limits. As a result, continuous flow monitoring is not necessary. For most of the affected tanks (depending on shape and orientation), a precise 24-hour total is readily available from measurement of fuel tank fuel volumes. For these emission units, measuring tank fuel volume can replace the per-emission unit

in-line fuel monitors called for in the proposed permit. These tank measurements are robust (little to go wrong), are in place, are currently used for operational tracking purposes and are accurate. They do not necessitate cutting of existing fuel lines and laying additional new fuel lines. Deck space is at a premium and additional lines could be a safety hazard. Furthermore, some of the emission units are portable and no space has been planned for additional fuel meters. Some of the tanks may be of odd shapes and otherwise not conducive for accurate fuel volume measurement and in these cases in-line fuel metering could be the preferable and more accurate measurement. Shell requests the option in the permit of using either fuel tank volume measurement, or fuel meters on groups of sources (as grouped in the permit). Shell would offer to demonstrate which tanks could have their fuel volumes measured accurately.

3.0 ELIMINATION OF REDUNDANT OR UNNECESSARY COMPLIANCE CONDITIONS

3.1 Associated fleet locations relative to the Discoverer

From a safety and operational perspective, it is important that, should it be necessary, each vessel have the ability to occasionally enter or traverse the applicable exclusion area. For practical and technical reasons, doing so on the rare occasion it might be needed would not put NAAQS or increment compliance in jeopardy because the vessels would not be breaking ice at full power within the applicable exclusion area or remaining in the area for extended periods at lower power. There are specific duties for the associated fleet vessels (icebreaker, anchor handler, Nanuq and re-supply ship) and these have been defined in the application. The application describes from the operator's perspective how they will be operated and the normal operating scenarios and the maximum emission scenario. The vessels have no other duties that would produce comparable emissions to those modeled in the permit application, which, for the icebreakers are the emissions associated with full-power operation. There is one primary purpose for the massive engines on the icebreakers and that is to break thick ice. The ice breaking will necessarily occur outside the applicable exclusions areas because it would be counterproductive and ineffective for the icebreaker to attempt to manage ice closer to the Discoverer. The icebreaker must intercept ice floes at a sufficient distance upwind of the Discoverer such that, if it is determined that the ice cannot be fragmented or diverted, there remains sufficient time for the Discoverer to complete emergency move-off procedures before the ice reaches it. (It takes hours for the Discoverer to extract drill stem, close a well and to move off site to avoid the ice.) A secondary purpose of the anchor handler (an icebreaker) is to set and retrieve anchors, which is addressed in the application as an operating scenario. Apart from icebreaking outside the applicable exclusion areas, and anchor handling, there is no other operational condition under which the large engines of the icebreakers would operate at any rate other than low power sufficient to propel the ship. No other potential load exists, except possibly to tow another vessel, and any towing would be undertaken only as an emergency.

At the same time, an icebreaker may need to shift directions quickly because of shifting wind direction and ice floes, and may need to temporarily enter or cross its exclusion area. Such episodes of less than full power output do not present a risk of exceedance of any air quality standard because they are not worst-case. Similarly, if there is some maintenance activity calling the icebreaker to a different location, it should be able to cross through this exclusion area. If there is a safety reason for the icebreaker to move, it must have the flexibility to move freely. Thus if the icebreakers operate within the specified exclusion area, their engines will have relatively low emissions – certainly lower than if they were breaking ice outside that zone, which is the worst-case emissions scenario, which has been modeled in the application.

There are sufficient operational and economic reasons that the associated fleet will perform its highest-emitting duties at the locations described in the application, and the proposed permit, in

Condition A.1, already requires Shell to operate the associated fleet in accordance with the application and supporting materials. The associated fleet location restrictions are, therefore, redundant, and as explained, would create unnecessary safety and operational risks. Shell requests that the final permit remove the associated fleet location restrictions in proposed permit Conditions N.6, O.6, Q.3, along with the related monitoring and record-keeping

3.2 Other redundant compliance conditions

The permit contains a number of annual limits on fuel usage by specific emissions units (and on incinerator throughput). See e.g., Conditions I.6, K.6, N.5, O.5, Q.2. Annual limits are redundant in view of the overarching limit of 168 days of drilling per year, which limit was carefully designed and validated to protect all applicable air quality standards and increments taking into account the emissions from these units. These subsidiary annual limits should be deleted from the permit. The permit will remain no less effective and stringent by relying on the 168-day limit.

3.3 Other emission unit conditions

3.3.1 Ammonia CEM

Condition C.7.6.4 requires continuous monitoring of ammonia from the Discoverer generator SCR exhaust. Shell requests that this condition be replaced by a stack test demonstration of compliance with the BACT limits. Demonstrating compliance with emission limits by initial stack test is a common practice and would give more reliable results than a CEM. Operating a continuous emission monitor (CEM) would be particularly challenging in the Arctic environment. Further, there is no unique issue in the Chukchi giving special sensitivity to ammonia emissions that would indicate the need for CEM monitoring, even if it could be reliably performed on the Discoverer.

3.3.2 Propulsion engine testing at 20 percent

Conditions N.9.1 and O.11.1 require stack testing for the icebreaker and anchor handler propulsion engines at 20 percent of capacity. This level of operation is considerably lower than normal operating conditions, under which these engines run at least 30 percent capacity. If this lower level of operation is of interest to EPA, then the resulting emission factors should not be applied to the normal operating conditions for determination of emissions, because, the engines, while not emitting in large quantities at these low power levels, oftentimes have higher emission factors (mass of pollutant per unit power output) at these levels. If this is an important or informative emission level to EPA then this is another reason why the load monitoring compliance tracking system must be use in place of the fuel monitoring system. Otherwise, this testing level should be eliminated as it is likely to bias the emissions estimates.

3.3.3 Generic emission factors – smaller engines.

Conditions F.5, G.7, H.7, I.7, J.5 and others, in combination, requires some 555 parameter stack tests, approximately a third of which are to be accomplished each year. This is an enormous

number of tests, not realistic to be performed in the time the vessels are available to Shell to test. During the permitting application process, EPA determined the highest emission factor that would be justifiable for each emission unit. It is highly likely that these emission factors are on the high side of the actual emissions. Shell accepts the use of these for the smaller emission units and requests that these same emission factors be used to demonstrate compliance. Shell recommends that stack testing not be required for the new Tier 3 engines, the cranes, the cementing and logging units, the boilers and utility generators. This would decrease the required stack testing to about 200 stack tests, about 80 per year. In addition, Shell requests that the stack tests for these smaller units be replaced by the use of the permit application factors. These smaller emission units represent the smaller portion of the $PM_{2.5}$ and NO_x emissions.

4.0 MISCELLANEOUS CHANGES TO STREAMLINE COMPLIANCE

4.1 Elimination of unimportant testing

Conditions B.7.9, B.9, B.10, C.6.3, C.6.4.2 & 3, F.5.3, F.5.4.2 &3, G.7.3, G.7.4.2 & 3, H.7.3, H.7.4.2 & 3, I.7.3, I.4.2 & 3, J.5.3, J.5.4.2 & 3, K.7.2 and K.7.4.2 & 3 all require Shell to test fuel for density and heat content. These parameters have no relation to and are not indicative of compliance with the emissions limits for any emissions unit covered by the permit compliance-related benefits and they should be eliminated. Additionally, CO and VOC impacts are well below the NAAQS; thus testing of them is of little value over use of the application-provided factors. Accordingly, Shell requests the elimination or modification of at least Conditions B.7.9, B.9, B.10, C.6.3, C.6.4.2 & 3, F.5.3, F.5.4.2 &3, G.7.3, G.7.4.2 & 3, H.7.3, H.7.4.2 & 3, I.7.3, I.4.2 & 3, J.5.3, J.5.4.2 & 3, K.7.2 and K.7.4.2 & 3.

4.2 Clarification of terms

Conditions N.1.2 and O.1.2 appear ambiguous. They should be modified to clarify that the propulsion engines are also generators that power electric-drive propulsion. The term "generator" meant here should be understood to mean "utility generator".

4.3 Alignment of accuracies

Condition K.8.1.2 would require incinerator feed weighing to be accurate to within 0.05 lb (0.8 oz). The various conditions that limit fuel consumption would require usage to be measured to within two percent accuracy. These requirements are unrealistically and unnecessarily stringent. The stack-test-generated emission factors for the two pollutants of most interest are $PM_{2.5}$ and NO_x, and are only accurate to 15 percent or worse[2]. Compliance with the permit-listed emission limits is determined by multiplying the operating rate (incineration mass or fuel consumption) times the emission factor and the result can be no more accurate than the least accurate term in the equation. So, the result will still be no better than 15 percent accuracy. A scale accuracy of 5 lb over typical charges of 100 lb or greater, and fuel accuracy of 5 percent of daily maximum consumption would not decrease the precision in any material may. Shell requests that the permit be modified to incorporate these more reasonable accuracy requirements.

4.4 Post-Construction Ambient Air Quality Monitoring (Condition R)

For the purpose of aligning the permit requirements with current EPA-approved monitoring programs on the North Slope, Shell requests the following changes in the permit, provided in italics:

---

2 There are numerous reports on inaccuracies associated with the stack test reference methods. The following two are only a small sample of documentation of the serious measurement limitations of stack tests. Lanier, Steven W. (under auspices of: ASME), Reference Method Accuracy and Precision (ReMAP): Phase 1 Precision of Manual Stack Emission Measurements, CRTD Vol. 60, page 4, Richards, John et.al., Optimized Method 202 Sampling Train to Minimize the Biases Associated with Method 202 Measurement of Condensable Particulate Matter Emissions, AWMA November 2-3 2005, Hazardous Waste Combustion Specialty Conference.

Condition 1.1: An alternative $PM_{2.5}$ monitoring station may be used in lieu of the required monitoring station provided that approval of the monitoring station is obtained from EPA. *The currently installed Wainwright station satisfies this requirement if operated in accordance with the remaining conditions herein.*

Condition 2.1: An alternative meteorological monitoring station may be used in lieu of the required monitoring station provided that approval of the monitoring station is obtained from EPA. *The currently installed Wainwright station satisfies this requirement if operated in accordance with the remaining conditions herein.*

Conditions 1.4 and 2.5: The monitoring station shall continue to operate and record data *for three years* or until such time that written approval is obtained from EPA authorizing the termination of its operation, *whichever date occurs first*.

Condition 4: Monthly Reporting. Within ~~30~~ *45* days after the end of each calendar month, the permittee shall submit to EPA a printed summary of the $PM_{2.5}$ and meteorological monitoring data collected during the prior calendar month[3].

Condition 5: Audit Report. The permittee shall submit audit reports with*in* ~~30~~ *45* days after the following events:

5.1 Completion of the post-installation equipment audit;

5.2 Completion of independent performance and systems audit;

5.3 Completion of quarterly audits required for ambient air quality data collection systems; and

5.4 Completion of the semi-annual audits required for the meteorological data collection system.

Quarterly and semi-annual audit periods shall be based on a calendar year[4].

Condition 6: *Quarterly and/or* Annual Report. Within 60 days after the end of each *quarter or* calendar year and following completion of the collection of monitoring, the permittee shall submit to EPA ~~annual/~~final reports in text, tabular, and graphic forms, including data in digitized forma. The digitized formats of the measured air quality and meteorological data shall be in ASCII format and AIRS format.

Condition 7: System and Performance Audit Report. Within 60 days after completion of data collection, the permittee shall also submit the final report for the system and performance audits required prior to monitoring termination.

---

3 NOTE: Per the Wainwright QAPP prepared by AECOM and signed by EPA on January 5, 2009, AECOM will provide a draft report for review within 30 days at the end of each calendar month, however the final report will be submitted to EPA within 45 days at the end of each calendar month.

4 NOTE: Per the Wainwright QAPP prepared by AECOM and signed by EPA on January 5, 2009, audit reports will be submitted to AECOM by the independent auditor within 45 days following the conclusion of each audit.

ATTACHMENT A

Updated emission inventory

Air Sciences Inc.	PROJECT TITLE: Shell Offshore, Inc.	BY: S. Pryor
ENGINEERING CALCULATIONS	PROJECT NO: 180-15-1	PAGE: 1 OF: 21
	SUBJECT: Discoverer Emissions-AK OCS	DATE: September 17, 2009

Frontier Discoverer Sources

Unit ID	Description	Make/Model	Rating	Max fuel consumpt. (MMBtu/hr) [1]	Maximum Emissions (lb/hr) [1] PM_{10}	$PM_{2.5}$	NO_x	SO_2	CO	Notes
FD-1	Generator Engine	Cat / D399	1,325 hp	6.91	0.20	0.20	0.77	1.10E-02	0.28	2
FD-2	Generator Engine	Cat / D399	1,325 hp	6.91	0.20	0.20	0.77	1.10E-02	0.28	2
FD-3	Generator Engine	Cat / D399	1,325 hp	6.91	0.20	0.20	0.77	1.10E-02	0.28	2
FD-4	Generator Engine	Cat / D399	1,325 hp	6.91	0.20	0.20	0.77	1.10E-02	0.28	2
FD-5	Generator Engine	Cat / D399	1,325 hp	6.91	0.20	0.20	0.77	1.10E-02	0.28	2
FD-6	Generator Engine	Cat / D399	1,325 hp	6.91	0.20	0.20	0.77	1.10E-02	0.28	2
FD-7	Propulsion Engine	MI / 6UEC65	7,200 hp	0.00	0.00	0.00	0.00	0.00E+00	0.00	3, 4
FD-8	Em Generator	Caterpillar / 3304	131 hp	0.92	0.64	0.64	3.26	1.46E-03	1.79	5
FD-9	MLC Compressor	Caterpillar / C-15	540 hp	3.58	0.18	0.18	3.55	5.71E-03	3.11	6
FD-10	MLC Compressor	Caterpillar / C-15	540 hp	3.58	0.18	0.18	3.55	5.71E-03	3.11	6
FD-11	MLC Compressor	Caterpillar / C-15	540 hp	3.58	0.18	0.18	3.55	5.71E-03	3.11	6
FD-12	HPU Engine	Detroit/8V71	250 hp	1.95	0.10	0.10	5.41	3.11E-03	0.16	7
FD-13	HPU Engine	Detroit/8V71	250 hp	1.95	0.10	0.10	5.41	3.11E-03	0.16	7
FD-14	Port Deck Crane	Cat / D343	365 hp	2.77	0.04	0.04	6.20	4.41E-03	0.13	7
FD-15	Starbd Deck Crane	Cat / D343	365 hp	2.77	0.04	0.04	6.20	4.41E-03	0.13	7
FD-16	Cementing Unit	Detroit / 8V-71N	335 hp	2.62	0.21	0.21	8.66	4.17E-03	0.48	7
FD-17	Cementing Unit	Detroit / 8V-71N	335 hp	2.62	0.21	0.21	8.66	4.17E-03	0.48	7
FD-18	Cementing Unit	GM 3-71	147 hp	1.15	0.09	0.09	3.80	1.83E-03	0.21	7
FD-19	Logging Winch	Detroit / 4-71N	128 hp	1.00	0.08	0.08	3.31	1.59E-03	0.18	7
FD-20	Logging Winch	John Deere/4024TF270	36 kW	0.34	0.01	0.01	0.60	5.37E-04	0.04	7, 8
FD-21	Heat Boiler	Clayton 200 Boiler	7.97 MMBtu/hr	7.97	0.19	0.19	1.60	1.27E-02	0.62	
FD-22	Heat Boiler	Clayton 200 Boiler	7.97 MMBtu/hr	7.97	0.19	0.19	1.60	1.27E-02	0.62	
FD-23	Incinerator	TeamTec/GS500C	276 lb/hr		1.13	0.97	0.69	0.35	4.28	
FD-31	Resupply Ship - docked			4.09	1.27	1.27	18.03	0.83	3.88	
Discoverer total while drilling				90.3	6.03	5.86	88.71	1.31	24.17	

Associated Fleets		Max fuel consumpt. (MMBtu/hr) [1]	Maximum Emissions (lb/hr) [1] PM_{10}	$PM_{2.5}$	NO_x	SO_2	CO	Notes
Ice Breaker								
IB ICE Engines		188.64	47.00	41.50	1,108.42	41.42	148.22	
IB Incinerators	154 lb/hr		1.02	0.70	0.23	0.19	23.10	
Total Ice Breaker		188.64	48.02	42.20	1,108.65	41.62	171.32	
Anchor Handler								
AH ICE Engines		180.16	10.59	10.59	91.20	39.56	148.20	
AH Boiler		4.00	0.10	0.10	0.21	0.90	0.15	
AH Incinerator	151 lb/hr		1.01	0.69	0.38	0.19	22.68	
Total Anchor Handler		184.16	11.69	11.37	91.78	40.65	171.04	
Total Ice Management Fleet		*372.80*	*59.71*	*53.57*	*1,200.44*	*82.26*	*342.36*	
Resupply Ship - in Transit		*44.41*	*20.04*	*16.07*	*265.11*	*9.75*	*34.89*	
OSR Fleet								
OSR Main Ship ICE Propulsion Engines		46.01	0.30	0.30	162.70	0.07	0.87	7
OSR Main Ship ICE Generators		17.99	1.22	0.98	107.40	0.03	1.41	7
OSR Main Ship Incinerator	125 lb/hr		0.83	0.57	0.19	0.16	18.75	
OSR Main Ship Total		64.00	2.35	1.85	270.28	0.26	21.04	
OSR Work Boat ICE Propulsion Engines		12.60	0.31	0.31	18.43	2.55	0.62	
OSR Work Boat ICE Generators		0.25	0.08	0.08	1.11	0.05	0.24	
OSR Work Boats Total		12.85	0.38	0.38	19.54	2.60	0.85	
Total OSR Fleet		*76.85*	*2.74*	*2.23*	*289.82*	*2.85*	*21.89*	
Total Fleet		494.06	82.49	71.88	1,755.37	94.87	399.14	
	Total All	584.38	88.52	77.74	1,844.08	96.18	423.31	

Notes

1 All emissions are the maximum 1-hour values
2 Units FD-1-6 (Generator Engines) instantaneous capacity restriction, SCR NO_x control effectiveness and Oxidation Catalyst reduction efficiencies applied
3 Not used during drilling 0%
4 Any emissions from the propulsion engine associated with travel to and from drill sites (within 25 miles of the sites) will be negligible and are included in the ice management fleet allowance.
5 Unit FD-8 (Emergency Generator) operation assumed for 120 min/week
6 Units FD-9-11 (MLC Compressors) are Tier 3 engines
7 CDPF PM & CO reduction efficiencies applied
8 Unit FD-20 (Logging Winch) is a Tier 2 engine

Values in blue are input.
Values in black are calculated or linked

Air Sciences Inc.	PROJECT TITLE: Shell Offshore, Inc.	BY: S. Pryor
ENGINEERING CALCULATIONS	PROJECT NO: 180-15-1	PAGE: 2 OF: 21
	SUBJECT: Discoverer Emissions-AK OCS	DATE: September 17, 2009

Emissions Summary for Screening Modeling Purposes
Base Operating Case [1]

Stack Identifier		Comments	PM_{10} Max 24-hr (lb/hr)	PM_{10} Max 24-hr (g/sec)	$PM_{2.5}$ Max 24-hr (lb/hr)	$PM_{2.5}$ Max 24-hr (g/sec)	NO_x Max 24-hr (lb/hr)	NO_x Max 24-hr (g/sec)	SO_2 Max 24-hr (lb/hr)	SO_2 Max 24-hr (g/sec)
F-D Stack No.										
1	FD-1, 2, 3, 4, 5, 6	Operating at 71%	1.18	0.15	1.18	0.15	4.64	0.59	6.62E-02	8.34E-03
	FD-7	Not used during drilling	0	0	0	0	0	0	0	0
	FD-8	120 min/wk	0.053	0.0067	0.053	0.0067	0.271	0.034	1.22E-04	1.54E-05
2	FD-9, 10, 11	Operating at 100%	0.53	0.07	0.53	0.07	10.66	1.34	1.71E-02	2.16E-03
3	FD-12, 13	Operating at 100%	0.21	0.03	0.21	0.03	10.81	1.36	6.23E-03	7.84E-04
4	FD-16, 17, 18	Operating at 28%	0.14	0.02	0.14	0.02	5.87	0.74	2.83E-03	3.56E-04
5a, 5b	FD-14, 15	Operating at 100%	0.09	0.01	0.09	0.01	12.39	1.56	8.82E-03	1.11E-03
6	FD-21, 22	Operating at 100%	0.38	0.05	0.38	0.05	3.21	0.40	2.54E-02	3.20E-03
7	FD-19, 20 [2]	Operating at 0%	0	0	0	0	0	0	0	0
8	FD-23	Operating at 300 lb/trash per day	0.05	0.01	0.04	0.01	0.03	0.00	0.02	0.00
	FD-31	Operating at 100% of 1 of 2 engines 12 hr/day [3]	0.32	0.04	0.32	0.04	4.51	0.57	0.21	0.03
	Total F-D		**2.95**	**0.37**	**2.94**	**0.37**	**52.40**	**6.60**	**0.35**	**0.044**
Ice Management Fleet										
	Ice Breaker		48.0	6.05	42.2	5.32	1,108.7	139.69	41.62	5.24
	Anchor Handler		11.7	1.47	11.4	1.43	91.8	11.56	40.65	5.12
Resupply - transit		4 hr/trip	3.3	0.42	2.7	0.34	44.2	5.57	1.63	0.20
OSR Main Ship		24 hr/day								
	Propulsion	Operating at 3,000 gal/day	0.1	0.01	0.1	0.01	58.8	7.41	0.03	3.34E-03
	Generators	Operating at 800 gal/day	0.3	0.04	0.2	0.03	26.5	3.34	0.01	8.92E-04
	Incinerator	Operating at 100%	0.8	0.10	0.6	0.07	0.2	0.02	0.16	1.97E-02
			1.2	0.16	0.9	0.12	85.5	10.77	0.19	2.39E-02
OSR Work Boats		24 hr/day								
	Propulsion	Operating at 100%	0.3	0.04	0.3	0.04	18.4	2.32	2.5	0.32
	Generators	Operating at 100%	0.1	0.01	0.1	0.01	1.1	0.14	0.1	6.41E-03
			0.4	0.05	0.4	0.05	19.5	2.46	2.60	0.33
	Total Fleet		**64.7**	**8.1**	**57.6**	**7.3**	**1349.7**	**170.1**	**86.7**	**10.9**
	maximum total when drilling		**67.62**	**8.52**	**60.50**	**7.62**	**1,402.1**	**176.7**	**87.02**	**10.96**

Stack Identifier		Comments	SO_2 Max 1-hr (lb/hr)	SO_2 Max 1-hr (g/sec)	CO Max 1-hr (lb/hr)	CO Max 1-hr (g/sec)
F-D Stack No.						
1	FD-1, 2, 3, 4, 5, 6	Operating at 71%	6.62E-02	8.34E-03	1.66	0.21
	FD-7	Not used during drilling	0	0	0	0
	FD-8	120 min/wk	1.46E-03	1.84E-04	1.79	0.23
2	FD-9, 10, 11	Operating at 100%	1.71E-02	2.16E-03	9.33	1.18
3	FD-12, 13	Operating at 100%	6.23E-03	7.84E-04	0.33	0.04
4	FD-16, 17, 18	Operating at 100%	1.02E-02	1.28E-03	1.18	0.15
5a, 5b	FD-14, 15	Operating at 100%	8.82E-03	1.11E-03	0.26	0.03
6	FD-21, 22	Operating at 100%	2.54E-02	3.20E-03	1.23	0.16
7	FD-19, 20	Operating at 100%	2.13E-03	2.68E-04	0.23	0.03
	FD-23	Operating at 100%	0.35	0.04	4.28	0.54
	FD-31	Operating at 100%	0.83	0.10	3.88	0.49
	Total F-D		**1.31**	**0.165**	**24.17**	**3.05**
Ice Management Fleet						
	Ice Breaker		41.62	5.24	171.32	21.59
	Anchor Handler		40.65	5.12	171.04	21.55
Resupply - transit			9.75	1.23	34.89	4.40
OSR Main Ship						
	Propulsion	Operating at 100%	0.07	0.01	0.87	0.11
	Generators	Operating at 100%	0.03	0.00	1.41	0.18
	Incinerator	Operating at 100%	0.16	0.02	18.75	2.36
			0.26	0.03	21.04	2.65
OSR Work Boats						
	Propulsion	Operating at 100%	2.5	0.32	0.6	0.08
	Generators	Operating at 100%	0.1	0.01	0.2	0.03
			2.60	0.33	0.85	0.11
	Total Fleet		**94.9**	**12.0**	**399.1**	**50.3**
	maximum total when drilling		**96.18**	**12.12**	**423.31**	**53.34**

[1] Base Operating Case: More than one of the two HPU units operating that day (greater than 352 gallons per day), and incineration is limited to 300 lb feed per day.
[2] Units FD-19 & 20 (Logging Winches) cannot operate simultaneously with cementing units, emissions combined with cementing units for 24-hr
[3] 12 hr/day, 1 Generator operating at 100% Ref: Craik, Keith email to R. Steen, 11/11/08

Air Sciences Inc.	PROJECT TITLE: Shell Offshore, Inc.	BY: S. Pryor	
	PROJECT NO: 180-15-1	PAGE: 3	OF: 21
ENGINEERING CALCULATIONS	SUBJECT: Discoverer Emissions-AK OCS	DATE: September 17, 2009	

Emissions Summary for Screening Modeling Purposes
Alternate Operating Scenario #1 [1]

Stack Identifier		Comments	PM_{10} Max 24-hr (lb/hr)	PM_{10} Max 24-hr (g/sec)	$PM_{2.5}$ Max 24-hr (lb/hr)	$PM_{2.5}$ Max 24-hr (g/sec)	NO_x Max 24-hr (lb/hr)	NO_x Max 24-hr (g/sec)	SO_2 Max 24-hr (lb/hr)	SO_2 Max 24-hr (g/sec)
F-D Stack No.										
1	FD-1, 2, 3, 4, 5, 6	Operating at 71%	1.18	0.15	1.18	0.15	4.64	0.59	6.62E-02	8.34E-03
	FD-7	Not used during drilling	0	0	0	0	0	0	0	0
	FD-8	120 min/wk	0.053	0.0067	0.053	0.0067	0.271	0.034	1.22E-04	1.54E-05
2	FD-9, 10, 11	Operating at 100%	0.53	0.07	0.53	0.07	10.66	1.34	1.71E-02	2.16E-03
3	FD-12, 13	Operating at 100% of 1 of 2 engine	0.10	0.01	0.10	0.01	5.41	0.68	3.11E-03	3.92E-04
4	FD-16, 17, 18	Operating at 28%	0.14	0.02	0.14	0.02	5.87	0.74	2.83E-03	3.56E-04
5a, 5b	FD-14, 15	Operating at 100%	0.09	0.01	0.09	0.01	12.39	1.56	8.82E-03	1.11E-03
6	FD-21, 22	Operating at 100%	0.38	0.05	0.38	0.05	3.21	0.40	2.54E-02	3.20E-03
7	FD-19, 20 [2]	Operating at 0%	0	0	0	0	0	0	0	0
8	FD-23	Operating at 800 lb/trash per day	0.14	0.02	0.12	0.01	0.08	0.01	0.04	0.01
	FD-31	Operating at 100% of 1 of 2 engine 12 hr/day [3]	0.32	0.04	0.32	0.04	4.51	0.57	0.21	0.03
	Total F-D		**2.93**	**0.37**	**2.91**	**0.37**	**47.04**	**5.93**	**0.37**	**0.047**
Ice Management Fleet										
	Ice Breaker		48.0	6.05	42.2	5.32	1,108.7	139.69	41.62	5.24
	Anchor Handler		11.7	1.47	11.4	1.43	91.8	11.56	40.65	5.12
Resupply - transit		4 hr/trip	3.3	0.42	2.7	0.34	44.2	5.57	1.63	0.20
OSR Main Ship		24 hr/day								
	Propulsion	Operating at 3,000 gal/day	0.1	0.01	0.1	0.01	58.8	7.41	0.03	3.34E-03
	Generators	Operating at 800 gal/day	0.3	0.04	0.2	0.03	26.5	3.34	0.01	8.92E-04
	Incinerator	Operating at 100%	0.8	0.10	0.6	0.07	0.2	0.02	0.16	1.97E-02
			1.2	0.16	0.9	0.12	85.5	10.77	0.19	2.39E-02
OSR Work Boats		24 hr/day								
	Propulsion	Operating at 100%	0.3	0.04	0.3	0.04	18.4	2.32	2.5	0.32
	Generators	Operating at 100%	0.1	0.01	0.1	0.01	1.1	0.14	0.1	6.41E-03
			0.4	0.05	0.4	0.05	19.5	2.46	2.60	0.33
	Total Fleet		**64.7**	**8.1**	**57.6**	**7.3**	**1349.7**	**170.1**	**86.7**	**10.9**
	maximum total when drilling		**67.61**	**8.52**	**60.47**	**7.62**	**1,396.7**	**176.0**	**87.04**	**10.97**

Stack Identifier		Comments	SO_2 Max 1-hr (lb/hr)	SO_2 Max 1-hr (g/sec)	CO Max 1-hr (lb/hr)	CO Max 1-hr (g/sec)
F-D Stack No.						
1	FD-1, 2, 3, 4, 5, 6	Operating at 71%	6.62E-02	8.34E-03	1.66	0.21
	FD-7	Not used during drilling	0	0	0	0
	FD-8	120 min/wk	1.46E-03	1.84E-04	1.79	0.23
2	FD-9, 10, 11	Operating at 100%	1.71E-02	2.16E-03	9.33	1.18
3	FD-12, 13	Operating at 100%	6.23E-03	7.84E-04	0.33	0.04
4	FD-16, 17, 18	Operating at 100%	1.02E-02	1.28E-03	1.18	0.15
5a, 5b	FD-14, 15	Operating at 100%	8.82E-03	1.11E-03	0.26	0.03
6	FD-21, 22	Operating at 100%	2.54E-02	3.20E-03	1.23	0.16
7	FD-19, 20	Operating at 100%	2.13E-03	2.68E-04	0.23	0.03
	FD-23	Operating at 100%	0.35	0.04	4.28	0.54
	FD-31	Operating at 100%	0.83	0.10	3.88	0.49
	Total F-D		**1.31**	**0.165**	**24.17**	**3.05**
Ice Management Fleet						
	Ice Breaker		41.62	5.24	171.32	21.59
	Anchor Handler		40.65	5.12	171.04	21.55
Resupply - transit			9.75	1.23	34.89	4.40
OSR Main Ship						
	Propulsion	Operating at 100%	0.07	0.01	0.87	0.11
	Generators	Operating at 100%	0.03	0.00	1.41	0.18
	Incinerator	Operating at 100%	0.16	0.02	18.75	2.36
			0.26	0.03	21.04	2.65
OSR Work Boats						
	Propulsion	Operating at 100%	2.5	0.32	0.6	0.08
	Generators	Operating at 100%	0.1	0.01	0.2	0.03
			2.60	0.33	0.85	0.11
	Total Fleet		**94.9**	**12.0**	**399.1**	**50.3**
	maximum total when drilling		**96.18**	**12.12**	**423.31**	**53.34**

[1] Operating Scenario #1: More than no use but less than one of the two HPU units operating that day (more than zero but less than or equal to 352 gallons per day), and incineration is limited to 800 lb feed per day.

[2] Units FD-19 & 20 (Logging Winches) cannot operate simultaneously with cementing units, emissions combined with cementing units for 24-hr

[3] 12 hr/day, 1 Generator operating at 100% Ref: Craik, Keith email to R. Steen, 11/11/08

Air Sciences Inc.	PROJECT TITLE: Shell Offshore, Inc.	BY: S. Pryor	
	PROJECT NO: 180-15-1	PAGE: 4	OF: 21
ENGINEERING CALCULATIONS	SUBJECT: Discoverer Emissions-AK OCS	DATE: September 17, 2009	

Emissions Summary for Screening Modeling Purposes
Alternate Operating Scenario #2 [1]

Stack Identifier		Comments	PM_{10} Max 24-hr (lb/hr)	PM_{10} Max 24-hr (g/sec)	$PM_{2.5}$ Max 24-hr (lb/hr)	$PM_{2.5}$ Max 24-hr (g/sec)	NO_x Max 24-hr (lb/hr)	NO_x Max 24-hr (g/sec)	SO_2 Max 24-hr (lb/hr)	SO_2 Max 24-hr (g/sec)
F-D Stack No.										
1	FD-1, 2, 3, 4, 5, 6	Operating at 71%	1.18	0.15	1.18	0.15	4.64	0.59	6.62E-02	8.34E-03
	FD-7	Not used during drilling	0	0	0	0	0	0	0	0
	FD-8	120 min/wk	0.053	0.0067	0.053	0.0067	0.271	0.034	1.22E-04	1.54E-05
2	FD-9, 10, 11	Operating at 100%	0.53	0.07	0.53	0.07	10.66	1.34	1.71E-02	2.16E-03
3	FD-12, 13	Operating at 0%	0.00	0.00	0.00	0.00	0.00	0.00	0.00E+00	0.00E+00
4	FD-16, 17, 18	Operating at 28%	0.14	0.02	0.14	0.02	5.87	0.74	2.83E-03	3.56E-04
5a, 5b	FD-14, 15	Operating at 100%	0.09	0.01	0.09	0.01	12.39	1.56	8.82E-03	1.11E-03
6	FD-21, 22	Operating at 100%	0.38	0.05	0.38	0.05	3.21	0.40	2.54E-02	3.20E-03
7	FD-19, 20 [2]	Operating at 0%	0	0	0	0	0	0	0	0
8	FD-23	Operating at 1,300 lb/trash per day	0.22	0.03	0.19	0.02	0.14	0.02	0.07	0.01
	FD-31	Operating at 100% of 1 of 2 engine 12 hr/day [3]	0.32	0.04	0.32	0.04	4.51	0.57	0.21	0.03
	Total F-D		**2.91**	**0.37**	**2.88**	**0.36**	**41.69**	**5.25**	**0.39**	**0.050**
Ice Management Fleet										
	Ice Breaker		48.0	6.05	42.2	5.32	1,108.7	139.69	41.62	5.24
	Anchor Handler		11.7	1.47	11.4	1.43	91.8	11.56	40.65	5.12
Resupply - transit		4 hr/trip	3.3	0.42	2.7	0.34	44.2	5.57	1.63	0.20
OSR Main Ship		24 hr/day								
	Propulsion	Operating at 3,000 gal/day	0.1	0.01	0.1	0.01	58.8	7.41	0.03	3.34E-03
	Generators	Operating at 800 gal/day	0.3	0.04	0.2	0.03	26.5	3.34	0.01	8.92E-04
	Incinerator	Operating at 100%	0.8	0.10	0.6	0.07	0.2	0.02	0.16	1.97E-02
			1.2	0.16	0.9	0.12	85.5	10.77	0.19	2.39E-02
OSR Work Boats		24 hr/day								
	Propulsion	Operating at 100%	0.3	0.04	0.3	0.04	18.4	2.32	2.5	0.32
	Generators	Operating at 100%	0.1	0.01	0.1	0.01	1.1	0.14	0.1	6.41E-03
			0.4	0.05	0.4	0.05	19.5	2.46	2.60	0.33
	Total Fleet		**64.7**	**8.1**	**57.6**	**7.3**	**1349.7**	**170.1**	**86.7**	**10.9**
	maximum total when drilling		**67.59**	**8.52**	**60.43**	**7.61**	**1,391.4**	**175.3**	**87.07**	**10.97**

Stack Identifier		Comments	SO_2 Max 1-hr (lb/hr)	SO_2 Max 1-hr (g/sec)	CO Max 1-hr (lb/hr)	CO Max 1-hr (g/sec)
F-D Stack No.						
1	FD-1, 2, 3, 4, 5, 6	Operating at 71%	6.62E-02	8.34E-03	1.66	0.21
	FD-7	Not used during drilling	0	0	0	0
	FD-8	120 min/wk	1.46E-03	1.84E-04	1.79	0.23
2	FD-9, 10, 11	Operating at 100%	1.71E-02	2.16E-03	9.33	1.18
3	FD-12, 13	Operating at 0%	0.00E+00	0.00E+00	0.00	0.00
4	FD-16, 17, 18	Operating at 100%	1.02E-02	1.28E-03	1.18	0.15
5a, 5b	FD-14, 15	Operating at 100%	8.82E-03	1.11E-03	0.26	0.03
6	FD-21, 22	Operating at 100%	2.54E-02	3.20E-03	1.23	0.16
7	FD-19, 20	Operating at 100%	2.13E-03	2.68E-04	0.23	0.03
	FD-23	Operating at 100%	0.35	0.04	4.28	0.54
	FD-31	Operating at 100%	0.83	0.10	3.88	0.49
	Total F-D		**1.30**	**0.164**	**23.84**	**3.00**
Ice Management Fleet						
	Ice Breaker		41.62	5.24	171.32	21.59
	Anchor Handler		40.65	5.12	171.04	21.55
Resupply - transit			9.75	1.23	34.89	4.40
OSR Main Ship						
	Propulsion	Operating at 100%	0.07	0.01	0.87	0.11
	Generators	Operating at 100%	0.03	0.00	1.41	0.18
	Incinerator	Operating at 100%	0.16	0.02	18.75	2.36
			0.26	0.03	21.04	2.65
OSR Work Boats						
	Propulsion	Operating at 100%	2.5	0.32	0.6	0.08
	Generators	Operating at 100%	0.1	0.01	0.2	0.03
			2.60	0.33	0.85	0.11
	Total Fleet		**94.9**	**12.0**	**399.1**	**50.3**
	maximum total when drilling		**96.17**	**12.12**	**422.98**	**53.29**

[1] Operating Scenario #2: No HPU use that day and incineration is limited to 1300 lb feed per day.
[2] Units FD-19 & 20 (Logging Winches) cannot operate simultaneously with cementing units, emissions combined with cementing units for 24-hr
[3] 12 hr/day, 1 Generator operating at 100% Ref: Craik, Keith email to R. Steen, 11/11/08

Source Release Parameters for Screening Modeling Purposes

Rig Sources

Source Description	Model Src ID	Source Type	Vertical or Horizontal?	Source Location X (m)	Source Location Y (m)	Rel Ht. [1] (m)	Stk Dia. (m)	Exit Temp. (deg K)	Exit Vel. (m/s)
Stack #1: 6 Main Drill Engines [2]	MAINENGS	POINT	Vertical	154.1	55.2	12.83	0.32	710	32.9
Stack #2: 3 MLC Compressors [3]	COMPENGS	POINT	Vertical	102.0	63.0	8.53	0.21	700	40.0
Stack #3: 2 HPU Engines [3]	HPPENGS	POINT	Vertical	79.0	65.0	6.10	0.18	700	40.0
Stack #4: 3 Cementing Units [4]	CEMENT	POINT	Vertical	95.0	67.0	6.10	0.18	800	46.6
Stack #5a: Crane Engine (port) [3]	CRANE_PT	POINT	Vertical	114	66.0	13.72	0.25	672	20.1
Stack #5b: Crane Engine (stbd) [3]	CRANE_SB	POINT	Vertical	70.1	43.7	13.72	0.25	672	20.1
Stack #6: 2 Heat Boilers [5]	HEATBOIL	POINT	Vertical	154.3	52.2	12.83	0.46	478	7.3
Stack #7: 2 Logging Winches [3]	LOGWNCH	POINT	vertical	120.7	55.2	8.53	0.10	711	53.0
Stack #8: 1 Incinerator [3]	INCIN_D	POINT	Vertical	61.0	65.0	2.44	0.46	623	10.0

[1] Above main deck which is approximately 4.57 meters (15 feet) above the water surface.
[2] D399 Caterpillar Engine Data Sheet, 05/95 & D399 Stack Parameters Sheet
[3] Kulluk Permit R100CS-AK-07-01, June 2008
[4] Detroit Diesel Allison, Basic Engine Performance Model: 8V-71N, 10/15/81 & Detroit/8V-71N Stack Parameters Sheet; diameter from Kulluk Permit R100CS-AK-07-01, June 2008
[5] Clayton Industries, 8/2001

Fleet Sources

Source Description	Mod. Src. ID	Source Type	Ship Type	Stack Orientation	Rel. Ht. (m)	Stack Dia. [1] (m)	Exit Temp. (deg K)	Exit Vel. [1] (m/s)
Resupply [2]	KILABUK-T	POINT	Resupply	Vertical	15.24	0.18	700	40.0
Oil Spill Response (Kvichaks) [3a]	OILSPL3	POINT/VOLUMES	OSR Fleet (Kvichaks)	Vertical	3.35	0.15	694	32.9
Oil Spill Response (Nanuq) [3b]	OILSPL4	POINT/VOLUMES	OSR Fleet (Nanuq)	Vertical	15.24	0.76	644	40.0
Fennica/Nordica [4]	FENNICA2	POINT/VOLUMES	Secondary	Vertical	32.00	0.80	655	38.4
Vladimir Ignatjuk [5]	VLADIGN2	POINT/VOLUMES	Primary, Secondary	Vertical	24.38	0.79	668	33.2
Talagy [6]	TALAGY	POINT/VOLUMES	Primary, Secondary	Vertical	25.91	0.80	594	43.7
Tor Viking II [7]	TOR_H	POINT/VOLUMES	Secondary	Horizontal	28.96	110.38	579	0.001
Odin Viking II [8]	ODIN_H	POINT/VOLUMES	Primary	Horizontal	28.96	94.61	579	0.001
Balder Viking [9]	BALD_H	POINT/VOLUMES	Secondary	Horizontal	28.96	110.38	579	0.001
Vidar Viking [10]	VIDAR_H	POINT/VOLUMES	Secondary	Horizontal	28.96	110.38	579	0.001

Fleet Sources, continued

Source Description	Source	Propulsion Engine	Max. Engine (kW)
Resupply [2]	Engine	---	---
Oil Spill Response (Kvichaks) [3a]	Engine	---	---
Oil Spill Response (Nanuq) [3b]	Engine	---	---
Fennica/Nordica [4]	Engine	2X Wartsila 16V32, 2X 12V32	6,000
Vladimir Ignatjuk [5]	Engine	4X Stork Werkspoor 8TM410	4,325
Talagy [6]	Engine	Sulzer 12 ZV 40/48	6,264
Tor Viking II [7]	Engine	2X MaK 8M32C, 2X 6M32C	3,840
Odin Viking II [8]	Engine	4X MaK 6M32C	2,880
Balder Viking [9]	Engine	2X MaK 8M32C, 2X 6M32C	3,840
Vidar Viking [10]	Engine	2X MaK 8M32C, 2X 6M32C	3,840

[1] Horizontal stacks adjusted per Alaska DEC recommendations to impeded vertical momentum (0.001 m/sec exit velocity), while allowing credit for buoyant rise from hot stacks. Adjustment to diameter is: 31.6 * (actual diameter in meters) * (square root of actual exit velocity in units of meters/sec).
[2] Resupply ship (Jim Kilabuk) configuration is taken from the Kulluk Permit R100CS-AK-07-01, June 2008.
[3a] OSR fleet configuration for the Kvichaks (34-foot boats) is from the Firebaugh Technical Memo.
[3b] OSR fleet configuration for the Nanuq is from the Firebaugh Technical Memo.
[4] Alaska Source Testing, LLC. Summary of Test Results Fennica/Nordica Icebreaker. June 28, 2007.
[5] TRC Environmental Corp. Emission Test Report - Vladimir Ignatjuk, Project No.150614. July 12, 2007.
[6] FEMCO-Management. Safety Quality Expertise – Fleet/AHTS "Talagy".
[7] TRC Environmental Corp. Emission Test Report - Tor Viking II, Project No.150614. July 12, 2007.
[8] Viking Supply Ships AS Shipowners. AHTS Odin Viking II - Main Characteristics.
[9] Viking Supply Ships AS Shipowners. AHTS/Icebreaker Balder Viking - Main Characteristics.
[10] Viking Supply Ships AS Shipowners. AHTS/Icebreaker Vidar Viking - Main Characteristics.

Air Sciences Inc.	PROJECT TITLE: Shell Offshore, Inc.	BY: Tim Martin	
	PROJECT NO: 180-15-1	PAGE: 6	OF: 21
ENGINEERING CALCULATIONS	SUBJECT: Discoverer Emissions-AK OCS	DATE: September 17, 2009	

Fleet Sources, Stack Parameters for Loads Analysis - SCREEN3

Source Description	Load	Mod. Src. ID	Source Type	Stack Orientation	Rel. Ht. (m)	Stack Dia. [1] (m)	Exit Temp. (deg K)	Exit Vel. [1] (m/s)
Vladimir Ignatjuk [3]	80%	VLD2_080	POINT	Vertical	24.38	0.79	668	33.2
Vladimir Ignatjuk [3]	57%	VLD2_057	POINT	Vertical	24.38	0.79	638	25.9
Vladimir Ignatjuk [3]	35%	VLD2_035	POINT	Vertical	24.38	0.79	581	16.3
Fennica/Nordica [4]	80%	FEN2_080	POINT	Vertical	32.00	0.80	655	38.4
Fennica/Nordica [4]	57%	FEN2_057	POINT	Vertical	32.00	0.80	633	30.0
Fennica/Nordica [4]	35%	FEN2_035	POINT	Vertical	32.00	0.80	637	20.3
Tor Viking II [5]	80%	TORH_080	POINT	Horizontal	28.96	110.4	579	0.001
Tor Viking II [5]	57%	TORH_057	POINT	Horizontal	28.96	101.6	607	0.001
Tor Viking II [5]	35%	TORH_035	POINT	Horizontal	28.96	74.7	630	0.001

Fleet Sources, Inputs and Outputs for Loads Analysis - ISC-PRIME

Source Description	Actual NOx Emissions (lb/hr)	Normalized NOx Emissions (g/sec) [6]	Lowest Final Plume Ht. (m) [2]	Sigma Y (m)	Sigma Z [2] (m)	Max. ISC-PRIME Impact (ug/m3)	Load
Vladimir Ignatjuk [3]	83.6	1.000	24.43	46.51	9.21	**110.7**	**80%**
Vladimir Ignatjuk [3]	68.4	0.818	24.42	46.51	9.21	90.6	57%
Vladimir Ignatjuk [3]	29.6	0.354	24.40	46.51	9.21	39.3	35%
Fennica/Nordica [4]	96.5	1.000	32.02	46.51	12.76	**78.4**	**80%**
Fennica/Nordica [4]	66.6	0.690	32.02	46.51	12.76	54.1	57%
Fennica/Nordica [4]	49.0	0.508	32.01	46.51	12.76	39.8	35%
Tor Viking II [5]	13.8	1.000	28.97	46.51	11.34	**89.4**	**80%**
Tor Viking II [5]	5.16	0.374	28.97	46.51	11.34	33.4	57%
Tor Viking II [5]	2.61	0.189	28.97	46.51	11.34	16.9	35%

[1] Horizontal stacks adjusted per Alaska DEC recommendations to impeded vertical momentum (0.001 m/sec exit velocity), while allowing credit for buoyant rise from hot stacks. Adjustment to diameter is: 31.6 * (actual diameter in meters) * (square root of actual exit velocity in units of meters/sec).

[2] From SCREEN3 model output.

[3] TRC Environmental Corp. Emission Test Report - Vladimir Ignatjuk, Project No.150614. July 12, 2007.

[4] Alaska Source Testing, LLC. Summary of Test Results Fennica/Nordica Icebreaker. June 28, 2007.

[5] TRC Environmental Corp. Emission Test Report - Tor Viking II, Project No.150614. July 12, 2007.

[6] Normalized emissions are based on the emissions at each load point (100%, 75%, 50%, etc.) divided by the emissions from the maximum load point (100%).

Stack Parameters for Loads Analysis [2]

Source Description	Load	Mod. Src. ID	Source Type	Stack Orientation	Rel. Ht. [1] (m)	Stack Dia. (m)	Exit Temp. (deg K)	Exit Vel. (m/s)
Stack #1: 6 Main Drill Engines	100%	MAIN_100	POINT	vertical	12.83	0.32	710	32.9
Stack #1: 6 Main Drill Engines	75%	MAIN_075	POINT	vertical	12.83	0.32	663	26.4
Stack #1: 6 Main Drill Engines	50%	MAIN_050	POINT	vertical	12.83	0.32	606	21.0

Inputs and Outputs for Loads Analysis (NO_x and PM_{10}) - ISC-PRIME [2]

Source Description	Actual Emissions (g/hr)		Normalized Emissions (g/sec) [3]		Max. ISC-PRIME Impact (ug/m3)		Load
	NO_x	PM_{10}	NO_x	PM_{10}	NO_x	PM_{10}	
Stack #1: 6 Main Drill Engines	7993.9	251.2	1.000	1.000	**64.7**	**64.7**	**100%**
Stack #1: 6 Main Drill Engines	6159.8	133.8	0.771	0.533	56.5	39.0	75%
Stack #1: 6 Main Drill Engines	4360.5	79.1	0.545	0.315	45.6	26.4	50%

Inputs and Outputs for Loads Analysis (CO and SO_2) - ISC-PRIME [2]

Source Description	Actual Emissions (g/hr)		Normalized Emissions (g/sec)		Max. ISC-PRIME Impact (ug/m3)		Load
	CO	SO_2	CO	SO_2	CO	SO_2	
Stack #1: 6 Main Drill Engines	882.7	7.0	1.000	1.000	**64.7**	**64.7**	**100%**
Stack #1: 6 Main Drill Engines	710.1	5.1	0.804	0.730	58.9	53.5	75%
Stack #1: 6 Main Drill Engines	622.6	3.5	0.705	0.498	59.0	41.7	50%

[1] Above main deck which is approximately 4.57 meters (15 feet) above the water surface.

[2] Caterpillar D399 Engine Data Sheet, 05/95

[3] Normalized emissions are based on the emissions at each load point (100%, 75%, 50%, etc.) divided by the emissions from the maximum load point (100%).

Source Release Parameters for Screening Modeling Purposes

Fleet Sources

Source Description	Model Src ID	Source Type	Source Location X (m)	Source Location Y (m)	Rel Ht. (m)	Sigma-Y (m)	Sigma-Z (m)
Oil Spill Response Ships k,n *	OILSP01k,n	VOLUME	-1984.3	980.0	3.38, 17.55	23.26	1.42, 6.38
Oil Spill Response Ships k,n *	OILSP02k,n	VOLUME	-1984.3	930.0	3.38, 17.55	23.26	1.42, 6.38
Oil Spill Response Ships k,n *	OILSP03k,n	VOLUME	-1984.3	880.0	3.38, 17.55	23.26	1.42, 6.38
Oil Spill Response Ships k,n *	OILSP04k,n	VOLUME	-1984.3	830.0	3.38, 17.55	23.26	1.42, 6.38
Oil Spill Response Ships k,n *	OILSP05k,n	VOLUME	-1984.3	780.0	3.38, 17.55	23.26	1.42, 6.38
Oil Spill Response Ships k,n *	OILSP06k,n	VOLUME	-1984.3	730.0	3.38, 17.55	23.26	1.42, 6.38
Oil Spill Response Ships k,n *	OILSP07k,n	VOLUME	-1984.3	680.0	3.38, 17.55	23.26	1.42, 6.38
Oil Spill Response Ships k,n *	OILSP08k,n	VOLUME	-1984.3	630.0	3.38, 17.55	23.26	1.42, 6.38
Oil Spill Response Ships k,n *	OILSP09k,n	VOLUME	-1984.3	580.0	3.38, 17.55	23.26	1.42, 6.38
Oil Spill Response Ships k,n *	OILSP10k,n	VOLUME	-1984.3	530.0	3.38, 17.55	23.26	1.42, 6.38
Oil Spill Response Ships k,n *	OILSP11k,n	VOLUME	-1984.3	480.0	3.38, 17.55	23.26	1.42, 6.38
Oil Spill Response Ships k,n *	OILSP12k,n	VOLUME	-1984.3	430.0	3.38, 17.55	23.26	1.42, 6.38
Oil Spill Response Ships k,n *	OILSP13k,n	VOLUME	-1984.3	380.0	3.38, 17.55	23.26	1.42, 6.38
Oil Spill Response Ships k,n *	OILSP14k,n	VOLUME	-1984.3	330.0	3.38, 17.55	23.26	1.42, 6.38
Oil Spill Response Ships k,n *	OILSP15k,n	VOLUME	-1984.3	280.0	3.38, 17.55	23.26	1.42, 6.38
Oil Spill Response Ships k,n *	OILSP16k,n	VOLUME	-1984.3	230.0	3.38, 17.55	23.26	1.42, 6.38
Oil Spill Response Ships k,n *	OILSP17k,n	VOLUME	-1984.3	180.0	3.38, 17.55	23.26	1.42, 6.38
Oil Spill Response Ships k,n *	OILSP18k,n	VOLUME	-1984.3	130.0	3.38, 17.55	23.26	1.42, 6.38
Oil Spill Response Ships k,n *	OILSP19k,n	VOLUME	-1984.3	80.0	3.38, 17.55	23.26	1.42, 6.38
Oil Spill Response Ships k,n *	OILSP20k,n	VOLUME	-1984.3	30.0	3.38, 17.55	23.26	1.42, 6.38
Oil Spill Response Ships k,n *	OILSP21k,n	VOLUME	-1984.3	-20.0	3.38, 17.55	23.26	1.42, 6.38
Oil Spill Response Ships k,n *	OILSP22k,n	VOLUME	-1984.3	-70.0	3.38, 17.55	23.26	1.42, 6.38
Oil Spill Response Ships k,n *	OILSP23k,n	VOLUME	-1984.3	-120.0	3.38, 17.55	23.26	1.42, 6.38
Oil Spill Response Ships k,n *	OILSP24k,n	VOLUME	-1984.3	-170.0	3.38, 17.55	23.26	1.42, 6.38
Oil Spill Response Ships k,n *	OILSP25k,n	VOLUME	-1984.3	-220.0	3.38, 17.55	23.26	1.42, 6.38
Oil Spill Response Ships k,n *	OILSP26k,n	VOLUME	-1984.3	-270.0	3.38, 17.55	23.26	1.42, 6.38
Oil Spill Response Ships k,n *	OILSP27k,n	VOLUME	-1984.3	-320.0	3.38, 17.55	23.26	1.42, 6.38
Oil Spill Response Ships k,n *	OILSP28k,n	VOLUME	-1984.3	-370.0	3.38, 17.55	23.26	1.42, 6.38
Oil Spill Response Ships k,n *	OILSP29k,n	VOLUME	-1984.3	-420.0	3.38, 17.55	23.26	1.42, 6.38
Oil Spill Response Ships k,n *	OILSP30k,n	VOLUME	-1984.3	-470.0	3.38, 17.55	23.26	1.42, 6.38
Oil Spill Response Ships k,n *	OILSP31k,n	VOLUME	-1984.3	-520.0	3.38, 17.55	23.26	1.42, 6.38
Oil Spill Response Ships k,n *	OILSP32k,n	VOLUME	-1984.3	-570.0	3.38, 17.55	23.26	1.42, 6.38
Oil Spill Response Ships k,n *	OILSP33k,n	VOLUME	-1984.3	-620.0	3.38, 17.55	23.26	1.42, 6.38
Oil Spill Response Ships k,n *	OILSP34k,n	VOLUME	-1984.3	-670.0	3.38, 17.55	23.26	1.42, 6.38
Oil Spill Response Ships k,n *	OILSP35k,n	VOLUME	-1984.3	-720.0	3.38, 17.55	23.26	1.42, 6.38
Oil Spill Response Ships k,n *	OILSP36k,n	VOLUME	-1984.3	-770.0	3.38, 17.55	23.26	1.42, 6.38
Oil Spill Response Ships k,n *	OILSP37k,n	VOLUME	-1984.3	-820.0	3.38, 17.55	23.26	1.42, 6.38
Oil Spill Response Ships k,n *	OILSP38k,n	VOLUME	-1984.3	-870.0	3.38, 17.55	23.26	1.42, 6.38
Oil Spill Response Ships k,n *	OILSP39k,n	VOLUME	-1984.3	-920.0	3.38, 17.55	23.26	1.42, 6.38
Oil Spill Response Ships k,n *	OILSP40k,n	VOLUME	-1984.3	-970.0	3.38, 17.55	23.26	1.42, 6.38
Secondary Ice Management Fleet	BRK_B01	VOLUME	1222.3	2405.0	25.22	46.51	9.21
Secondary Ice Management Fleet	BRK_B02	VOLUME	1222.3	2305.0	25.22	46.51	9.21
Secondary Ice Management Fleet	BRK_B03	VOLUME	1222.3	2205.0	25.22	46.51	9.21
Secondary Ice Management Fleet	BRK_B04	VOLUME	1222.3	2105.0	25.22	46.51	9.21
Secondary Ice Management Fleet	BRK_B05	VOLUME	1222.3	2005.0	25.22	46.51	9.21
Secondary Ice Management Fleet	BRK_B06	VOLUME	1222.3	1905.0	25.22	46.51	9.21
Secondary Ice Management Fleet	BRK_B07	VOLUME	1222.3	1805.0	25.22	46.51	9.21
Secondary Ice Management Fleet	BRK_B08	VOLUME	1222.3	1705.0	25.22	46.51	9.21
Secondary Ice Management Fleet	BRK_B09	VOLUME	1222.3	1605.0	25.22	46.51	9.21
Secondary Ice Management Fleet	BRK_B10	VOLUME	1222.3	1505.0	25.22	46.51	9.21
Secondary Ice Management Fleet	BRK_B11	VOLUME	1222.3	1405.0	25.22	46.51	9.21
Secondary Ice Management Fleet	BRK_B12	VOLUME	1222.3	1305.0	25.22	46.51	9.21
Secondary Ice Management Fleet	BRK_B13	VOLUME	1222.3	1205.0	25.22	46.51	9.21
Secondary Ice Management Fleet	BRK_B14	VOLUME	1222.3	1105.0	25.22	46.51	9.21
Secondary Ice Management Fleet	BRK_B15	VOLUME	1222.3	1005.0	25.22	46.51	9.21
Secondary Ice Management Fleet	BRK_B16	VOLUME	1222.3	905.0	25.22	46.51	9.21
Secondary Ice Management Fleet	BRK_B17	VOLUME	1222.3	805.0	25.22	46.51	9.21
Secondary Ice Management Fleet	BRK_B18	VOLUME	1222.3	705.0	25.22	46.51	9.21
Secondary Ice Management Fleet	BRK_B19	VOLUME	1222.3	605.0	25.22	46.51	9.21
Secondary Ice Management Fleet	BRK_B20	VOLUME	1222.3	505.0	25.22	46.51	9.21
Secondary Ice Management Fleet	BRK_B21	VOLUME	1222.3	405.0	25.22	46.51	9.21
Secondary Ice Management Fleet	BRK_B22	VOLUME	1222.3	305.0	25.22	46.51	9.21
Secondary Ice Management Fleet	BRK_B23	VOLUME	1222.3	205.0	25.22	46.51	9.21
Secondary Ice Management Fleet	BRK_B24	VOLUME	1222.3	105.0	25.22	46.51	9.21
Secondary Ice Management Fleet	BRK_B25	VOLUME	1222.3	5.0	25.22	46.51	9.21

* Each type of oil spill response ship is explicitly modeled. k denotes the Kvichaks (34-foot boats) and n denotes the Nanuq.

Source Release Parameters for Screening Modeling Purposes, contd.

Fleet Sources

Source Description	Model Src ID	Source Type	Source Location X (m)	Source Location Y (m)	Rel Ht. (m)	Sigma-Y (m)	Sigma-Z (m)
Secondary Ice Management Fleet	BRK_B26	VOLUME	1222.3	-95.0	25.22	46.51	9.21
Secondary Ice Management Fleet	BRK_B27	VOLUME	1222.3	-195.0	25.22	46.51	9.21
Secondary Ice Management Fleet	BRK_B28	VOLUME	1222.3	-295.0	25.22	46.51	9.21
Secondary Ice Management Fleet	BRK_B29	VOLUME	1222.3	-395.0	25.22	46.51	9.21
Secondary Ice Management Fleet	BRK_B30	VOLUME	1222.3	-495.0	25.22	46.51	9.21
Secondary Ice Management Fleet	BRK_B31	VOLUME	1222.3	-595.0	25.22	46.51	9.21
Secondary Ice Management Fleet	BRK_B32	VOLUME	1222.3	-695.0	25.22	46.51	9.21
Secondary Ice Management Fleet	BRK_B33	VOLUME	1222.3	-795	25.22	46.51	9.21
Secondary Ice Management Fleet	BRK_B34	VOLUME	1222.3	-895	25.22	46.51	9.21
Secondary Ice Management Fleet	BRK_B35	VOLUME	1222.3	-995	25.22	46.51	9.21
Secondary Ice Management Fleet	BRK_B36	VOLUME	1222.3	-1095	25.22	46.51	9.21
Secondary Ice Management Fleet	BRK_B37	VOLUME	1222.3	-1195	25.22	46.51	9.21
Secondary Ice Management Fleet	BRK_B38	VOLUME	1222.3	-1295	25.22	46.51	9.21
Secondary Ice Management Fleet	BRK_B39	VOLUME	1222.3	-1395	25.22	46.51	9.21
Secondary Ice Management Fleet	BRK_B40	VOLUME	1222.3	-1495	25.22	46.51	9.21
Secondary Ice Management Fleet	BRK_B41	VOLUME	1222.3	-1595	25.22	46.51	9.21
Secondary Ice Management Fleet	BRK_B42	VOLUME	1222.3	-1695	25.22	46.51	9.21
Secondary Ice Management Fleet	BRK_B43	VOLUME	1222.3	-1795	25.22	46.51	9.21
Secondary Ice Management Fleet	BRK_B44	VOLUME	1222.3	-1895	25.22	46.51	9.21
Secondary Ice Management Fleet	BRK_B45	VOLUME	1222.3	-1995	25.22	46.51	9.21
Secondary Ice Management Fleet	BRK_B46	VOLUME	1222.3	-2095	25.22	46.51	9.21
Secondary Ice Management Fleet	BRK_B47	VOLUME	1222.3	-2195	25.22	46.51	9.21
Secondary Ice Management Fleet	BRK_B48	VOLUME	1222.3	-2295	25.22	46.51	9.21
Primary Ice Management Fleet	BRK_A01	VOLUME	5022.3	4805	25.22	46.51	9.21
Primary Ice Management Fleet	BRK_A02	VOLUME	5022.3	4705	25.22	46.51	9.21
Primary Ice Management Fleet	BRK_A03	VOLUME	5022.3	4605	25.22	46.51	9.21
Primary Ice Management Fleet	BRK_A04	VOLUME	5022.3	4505	25.22	46.51	9.21
Primary Ice Management Fleet	BRK_A05	VOLUME	5022.3	4405	25.22	46.51	9.21
Primary Ice Management Fleet	BRK_A06	VOLUME	5022.3	4305	25.22	46.51	9.21
Primary Ice Management Fleet	BRK_A07	VOLUME	5022.3	4205	25.22	46.51	9.21
Primary Ice Management Fleet	BRK_A08	VOLUME	5022.3	4105	25.22	46.51	9.21
Primary Ice Management Fleet	BRK_A09	VOLUME	5022.3	4005	25.22	46.51	9.21
Primary Ice Management Fleet	BRK_A10	VOLUME	5022.3	3905	25.22	46.51	9.21
Primary Ice Management Fleet	BRK_A11	VOLUME	5022.3	3805	25.22	46.51	9.21
Primary Ice Management Fleet	BRK_A12	VOLUME	5022.3	3705	25.22	46.51	9.21
Primary Ice Management Fleet	BRK_A13	VOLUME	5022.3	3605	25.22	46.51	9.21
Primary Ice Management Fleet	BRK_A14	VOLUME	5022.3	3505	25.22	46.51	9.21
Primary Ice Management Fleet	BRK_A15	VOLUME	5022.3	3405	25.22	46.51	9.21
Primary Ice Management Fleet	BRK_A16	VOLUME	5022.3	3305	25.22	46.51	9.21
Primary Ice Management Fleet	BRK_A17	VOLUME	5022.3	3205	25.22	46.51	9.21
Primary Ice Management Fleet	BRK_A18	VOLUME	5022.3	3105	25.22	46.51	9.21
Primary Ice Management Fleet	BRK_A19	VOLUME	5022.3	3005	25.22	46.51	9.21
Primary Ice Management Fleet	BRK_A20	VOLUME	5022.3	2905	25.22	46.51	9.21
Primary Ice Management Fleet	BRK_A21	VOLUME	5022.3	2805	25.22	46.51	9.21
Primary Ice Management Fleet	BRK_A22	VOLUME	5022.3	2705	25.22	46.51	9.21
Primary Ice Management Fleet	BRK_A23	VOLUME	5022.3	2605	25.22	46.51	9.21
Primary Ice Management Fleet	BRK_A24	VOLUME	5022.3	2505	25.22	46.51	9.21
Primary Ice Management Fleet	BRK_A25	VOLUME	5022.3	2405	25.22	46.51	9.21
Primary Ice Management Fleet	BRK_A26	VOLUME	5022.3	2305	25.22	46.51	9.21
Primary Ice Management Fleet	BRK_A27	VOLUME	5022.3	2205	25.22	46.51	9.21
Primary Ice Management Fleet	BRK_A28	VOLUME	5022.3	2105	25.22	46.51	9.21
Primary Ice Management Fleet	BRK_A29	VOLUME	5022.3	2005	25.22	46.51	9.21
Primary Ice Management Fleet	BRK_A30	VOLUME	5022.3	1905	25.22	46.51	9.21
Primary Ice Management Fleet	BRK_A31	VOLUME	5022.3	1805	25.22	46.51	9.21
Primary Ice Management Fleet	BRK_A32	VOLUME	5022.3	1705	25.22	46.51	9.21
Primary Ice Management Fleet	BRK_A33	VOLUME	5022.3	1605	25.22	46.51	9.21
Primary Ice Management Fleet	BRK_A34	VOLUME	5022.3	1505	25.22	46.51	9.21
Primary Ice Management Fleet	BRK_A35	VOLUME	5022.3	1405	25.22	46.51	9.21
Primary Ice Management Fleet	BRK_A36	VOLUME	5022.3	1305	25.22	46.51	9.21
Primary Ice Management Fleet	BRK_A37	VOLUME	5022.3	1205	25.22	46.51	9.21
Primary Ice Management Fleet	BRK_A38	VOLUME	5022.3	1105	25.22	46.51	9.21
Primary Ice Management Fleet	BRK_A39	VOLUME	5022.3	1005	25.22	46.51	9.21
Primary Ice Management Fleet	BRK_A40	VOLUME	5022.3	905	25.22	46.51	9.21
Primary Ice Management Fleet	BRK_A41	VOLUME	5022.3	805	25.22	46.51	9.21
Primary Ice Management Fleet	BRK_A42	VOLUME	5022.3	705	25.22	46.51	9.21
Primary Ice Management Fleet	BRK_A43	VOLUME	5022.3	605	25.22	46.51	9.21

Source Release Parameters for Screening Modeling Purposes, contd.

Fleet Sources

Source Description	Model Src ID	Source Type	Source Location X (m)	Source Location Y (m)	Rel Ht. (m)	Sigma-Y (m)	Sigma-Z (m)
Primary Ice Management Fleet	BRK_A44	VOLUME	5022.3	505	25.22	46.51	9.21
Primary Ice Management Fleet	BRK_A45	VOLUME	5022.3	405	25.22	46.51	9.21
Primary Ice Management Fleet	BRK_A46	VOLUME	5022.3	305	25.22	46.51	9.21
Primary Ice Management Fleet	BRK_A47	VOLUME	5022.3	205	25.22	46.51	9.21
Primary Ice Management Fleet	BRK_A48	VOLUME	5022.3	105	25.22	46.51	9.21
Primary Ice Management Fleet	BRK_A49	VOLUME	5022.3	5	25.22	46.51	9.21
Primary Ice Management Fleet	BRK_A50	VOLUME	5022.3	-95	25.22	46.51	9.21
Primary Ice Management Fleet	BRK_A51	VOLUME	5022.3	-195	25.22	46.51	9.21
Primary Ice Management Fleet	BRK_A52	VOLUME	5022.3	-295	25.22	46.51	9.21
Primary Ice Management Fleet	BRK_A53	VOLUME	5022.3	-395	25.22	46.51	9.21
Primary Ice Management Fleet	BRK_A54	VOLUME	5022.3	-495	25.22	46.51	9.21
Primary Ice Management Fleet	BRK_A55	VOLUME	5022.3	-595	25.22	46.51	9.21
Primary Ice Management Fleet	BRK_A56	VOLUME	5022.3	-695	25.22	46.51	9.21
Primary Ice Management Fleet	BRK_A57	VOLUME	5022.3	-795	25.22	46.51	9.21
Primary Ice Management Fleet	BRK_A58	VOLUME	5022.3	-895	25.22	46.51	9.21
Primary Ice Management Fleet	BRK_A59	VOLUME	5022.3	-995	25.22	46.51	9.21
Primary Ice Management Fleet	BRK_A60	VOLUME	5022.3	-1095	25.22	46.51	9.21
Primary Ice Management Fleet	BRK_A61	VOLUME	5022.3	-1195	25.22	46.51	9.21
Primary Ice Management Fleet	BRK_A62	VOLUME	5022.3	-1295	25.22	46.51	9.21
Primary Ice Management Fleet	BRK_A63	VOLUME	5022.3	-1395	25.22	46.51	9.21
Primary Ice Management Fleet	BRK_A64	VOLUME	5022.3	-1495	25.22	46.51	9.21
Primary Ice Management Fleet	BRK_A65	VOLUME	5022.3	-1595	25.22	46.51	9.21
Primary Ice Management Fleet	BRK_A66	VOLUME	5022.3	-1695	25.22	46.51	9.21
Primary Ice Management Fleet	BRK_A67	VOLUME	5022.3	-1795	25.22	46.51	9.21
Primary Ice Management Fleet	BRK_A68	VOLUME	5022.3	-1895	25.22	46.51	9.21
Primary Ice Management Fleet	BRK_A69	VOLUME	5022.3	-1995	25.22	46.51	9.21
Primary Ice Management Fleet	BRK_A70	VOLUME	5022.3	-2095	25.22	46.51	9.21
Primary Ice Management Fleet	BRK_A71	VOLUME	5022.3	-2195	25.22	46.51	9.21
Primary Ice Management Fleet	BRK_A72	VOLUME	5022.3	-2295	25.22	46.51	9.21
Primary Ice Management Fleet	BRK_A73	VOLUME	5022.3	-2395	25.22	46.51	9.21
Primary Ice Management Fleet	BRK_A74	VOLUME	5022.3	-2495	25.22	46.51	9.21
Primary Ice Management Fleet	BRK_A75	VOLUME	5022.3	-2595	25.22	46.51	9.21
Primary Ice Management Fleet	BRK_A76	VOLUME	5022.3	-2695	25.22	46.51	9.21
Primary Ice Management Fleet	BRK_A77	VOLUME	5022.3	-2795	25.22	46.51	9.21
Primary Ice Management Fleet	BRK_A78	VOLUME	5022.3	-2895	25.22	46.51	9.21
Primary Ice Management Fleet	BRK_A79	VOLUME	5022.3	-2995	25.22	46.51	9.21
Primary Ice Management Fleet	BRK_A80	VOLUME	5022.3	-3095	25.22	46.51	9.21
Primary Ice Management Fleet	BRK_A81	VOLUME	5022.3	-3195	25.22	46.51	9.21
Primary Ice Management Fleet	BRK_A82	VOLUME	5022.3	-3295	25.22	46.51	9.21
Primary Ice Management Fleet	BRK_A83	VOLUME	5022.3	-3395	25.22	46.51	9.21
Primary Ice Management Fleet	BRK_A84	VOLUME	5022.3	-3495	25.22	46.51	9.21
Primary Ice Management Fleet	BRK_A85	VOLUME	5022.3	-3595	25.22	46.51	9.21
Primary Ice Management Fleet	BRK_A86	VOLUME	5022.3	-3695	25.22	46.51	9.21
Primary Ice Management Fleet	BRK_A87	VOLUME	5022.3	-3795	25.22	46.51	9.21
Primary Ice Management Fleet	BRK_A88	VOLUME	5022.3	-3895	25.22	46.51	9.21
Primary Ice Management Fleet	BRK_A89	VOLUME	5022.3	-3995	25.22	46.51	9.21
Primary Ice Management Fleet	BRK_A90	VOLUME	5022.3	-4095	25.22	46.51	9.21
Primary Ice Management Fleet	BRK_A91	VOLUME	5022.3	-4195	25.22	46.51	9.21
Primary Ice Management Fleet	BRK_A92	VOLUME	5022.3	-4295	25.22	46.51	9.21
Primary Ice Management Fleet	BRK_A93	VOLUME	5022.3	-4395	25.22	46.51	9.21
Primary Ice Management Fleet	BRK_A94	VOLUME	5022.3	-4495	25.22	46.51	9.21
Primary Ice Management Fleet	BRK_A95	VOLUME	5022.3	-4595	25.22	46.51	9.21
Primary Ice Management Fleet	BRK_A96	VOLUME	5022.3	-4695	25.22	46.51	9.21
Resupply Ship in Transit	RST_1	VOLUME	25.0	-12.5	15.24	29.07	6.38
Resupply Ship in Transit	RST_2	VOLUME	-37.5	-12.5	15.24	29.07	6.38
Resupply Ship in Transit	RST_3	VOLUME	-100.0	-12.5	15.24	29.07	6.38
Resupply Ship in Transit	RST_4	VOLUME	-162.5	-12.5	15.24	29.07	6.38
Resupply Ship in Transit	RST_5	VOLUME	-225.0	-12.5	15.24	29.07	6.38
Resupply Ship in Transit	RST_6	VOLUME	-287.5	-12.5	15.24	29.07	6.38
Resupply Ship in Transit	RST_7	VOLUME	-350.0	-12.5	15.24	29.07	6.38
Resupply Ship in Transit	RST_8	VOLUME	-412.5	-12.5	15.24	29.07	6.38
Resupply Ship in Transit	RST_9	VOLUME	-475.0	-12.5	15.24	29.07	6.38
Resupply Ship in Transit	RST_10	VOLUME	-537.5	-12.5	15.24	29.07	6.38
Resupply Ship in Transit	RST_11	VOLUME	-600.0	-12.5	15.24	29.07	6.38
Resupply Ship in Transit	RST_12	VOLUME	-662.5	-12.5	15.24	29.07	6.38
Resupply Ship in Transit	RST_13	VOLUME	-725.0	-12.5	15.24	29.07	6.38

Source Release Parameters for Screening Modeling Purposes, contd.

Fleet Sources

Source Description	Model Src ID	Source Type	Source Location X (m)	Source Location Y (m)	Rel Ht. (m)	Sigma-Y (m)	Sigma-Z (m)
Resupply Ship in Transit	RST_14	VOLUME	-787.5	-12.5	15.24	29.07	6.38
Resupply Ship in Transit	RST_15	VOLUME	-850.0	-12.5	15.24	29.07	6.38
Resupply Ship in Transit	RST_16	VOLUME	-912.5	-12.5	15.24	29.07	6.38
Resupply Ship in Transit	RST_17	VOLUME	-975.0	-12.5	15.24	29.07	6.38
Resupply Ship in Transit	RST_18	VOLUME	-1037.5	-12.5	15.24	29.07	6.38
Resupply Ship in Transit	RST_19	VOLUME	-1100.0	-12.5	15.24	29.07	6.38
Resupply Ship in Transit	RST_20	VOLUME	-1162.5	-12.5	15.24	29.07	6.38
Resupply Ship in Transit	RST_21	VOLUME	-1225.0	-12.5	15.24	29.07	6.38
Resupply Ship in Transit	RST_22	VOLUME	-1287.5	-12.5	15.24	29.07	6.38
Resupply Ship in Transit	RST_23	VOLUME	-1350.0	-12.5	15.24	29.07	6.38
Resupply Ship in Transit	RST_24	VOLUME	-1412.5	-12.5	15.24	29.07	6.38
Resupply Ship in Transit	RST_25	VOLUME	-1475.0	-12.5	15.24	29.07	6.38
Resupply Ship in Transit	RST_26	VOLUME	-1537.5	-12.5	15.24	29.07	6.38
Resupply Ship in Transit	RST_27	VOLUME	-1600.0	-12.5	15.24	29.07	6.38
Resupply Ship in Transit	RST_28	VOLUME	-1662.5	-12.5	15.24	29.07	6.38
Resupply Ship in Transit	RST_29	VOLUME	-1725.0	-12.5	15.24	29.07	6.38
Resupply Ship in Transit	RST_30	VOLUME	-1787.5	-12.5	15.24	29.07	6.38
Resupply Ship in Transit	RST_31	VOLUME	-1850.0	-12.5	15.24	29.07	6.38
Resupply Ship in Transit	RST_32	VOLUME	-1912.5	-12.5	15.24	29.07	6.38
Resupply Ship in Transit	RST_33	VOLUME	-1975.0	-12.5	15.24	29.07	6.38
Resupply Ship in Transit	RST_34	VOLUME	-2037.5	-12.5	15.24	29.07	6.38
Resupply Ship in Transit	RST_35	VOLUME	-2100.0	-12.5	15.24	29.07	6.38
Resupply Ship in Transit	RST_36	VOLUME	-2162.5	-12.5	15.24	29.07	6.38
Resupply Ship in Transit	RST_37	VOLUME	-2225.0	-12.5	15.24	29.07	6.38
Resupply Ship in Transit	RST_38	VOLUME	-2287.5	-12.5	15.24	29.07	6.38
Resupply Ship in Transit	RST_39	VOLUME	-2350.0	-12.5	15.24	29.07	6.38
Resupply Ship in Transit	RST_40	VOLUME	-2412.5	-12.5	15.24	29.07	6.38
Resupply Ship in Transit	RST_41	VOLUME	-2475.0	-12.5	15.24	29.07	6.38
Resupply Ship in Transit	RST_42	VOLUME	-2537.5	-12.5	15.24	29.07	6.38
Resupply Ship in Transit	RST_43	VOLUME	-2600.0	-12.5	15.24	29.07	6.38
Resupply Ship in Transit	RST_44	VOLUME	-2662.5	-12.5	15.24	29.07	6.38
Resupply Ship in Transit	RST_45	VOLUME	-2725.0	-12.5	15.24	29.07	6.38
Resupply Ship in Transit	RST_46	VOLUME	-2787.5	-12.5	15.24	29.07	6.38
Resupply Ship in Transit	RST_47	VOLUME	-2850.0	-12.5	15.24	29.07	6.38
Resupply Ship in Transit	RST_48	VOLUME	-2912.5	-12.5	15.24	29.07	6.38
Resupply Ship in Transit	RST_49	VOLUME	-2975.0	-12.5	15.24	29.07	6.38
Resupply Ship in Transit	RST_50	VOLUME	-3037.5	-12.5	15.24	29.07	6.38
Resupply Ship in Transit	RST_51	VOLUME	-3100.0	-12.5	15.24	29.07	6.38
Resupply Ship in Transit	RST_52	VOLUME	-3162.5	-12.5	15.24	29.07	6.38
Resupply Ship in Transit	RST_53	VOLUME	-3225.0	-12.5	15.24	29.07	6.38
Resupply Ship in Transit	RST_54	VOLUME	-3287.5	-12.5	15.24	29.07	6.38
Resupply Ship in Transit	RST_55	VOLUME	-3350.0	-12.5	15.24	29.07	6.38
Resupply Ship in Transit	RST_56	VOLUME	-3412.5	-12.5	15.24	29.07	6.38
Resupply Ship in Transit	RST_57	VOLUME	-3475.0	-12.5	15.24	29.07	6.38
Resupply Ship in Transit	RST_58	VOLUME	-3537.5	-12.5	15.24	29.07	6.38
Resupply Ship in Transit	RST_59	VOLUME	-3600.0	-12.5	15.24	29.07	6.38
Resupply Ship in Transit	RST_60	VOLUME	-3662.5	-12.5	15.24	29.07	6.38
Resupply Ship in Transit	RST_61	VOLUME	-3725.0	-12.5	15.24	29.07	6.38
Resupply Ship in Transit	RST_62	VOLUME	-3787.5	-12.5	15.24	29.07	6.38
Resupply Ship in Transit	RST_63	VOLUME	-3850.0	-12.5	15.24	29.07	6.38
Resupply Ship in Transit	RST_64	VOLUME	-3912.5	-12.5	15.24	29.07	6.38
Resupply Ship in Transit	RST_65	VOLUME	-3975.0	-12.5	15.24	29.07	6.38
Resupply Ship in Transit	RST_66	VOLUME	-4037.5	-12.5	15.24	29.07	6.38
Resupply Ship in Transit	RST_67	VOLUME	-4100.0	-12.5	15.24	29.07	6.38
Resupply Ship in Transit	RST_68	VOLUME	-4162.5	-12.5	15.24	29.07	6.38
Resupply Ship in Transit	RST_69	VOLUME	-4225.0	-12.5	15.24	29.07	6.38
Resupply Ship in Transit	RST_70	VOLUME	-4287.5	-12.5	15.24	29.07	6.38
Resupply Ship in Transit	RST_71	VOLUME	-4350.0	-12.5	15.24	29.07	6.38
Resupply Ship in Transit	RST_72	VOLUME	-4412.5	-12.5	15.24	29.07	6.38
Resupply Ship in Transit	RST_73	VOLUME	-4475.0	-12.5	15.24	29.07	6.38
Resupply Ship in Transit	RST_74	VOLUME	-4537.5	-12.5	15.24	29.07	6.38
Resupply Ship in Transit	RST_75	VOLUME	-4600.0	-12.5	15.24	29.07	6.38
Resupply Ship in Transit	RST_76	VOLUME	-4662.5	-12.5	15.24	29.07	6.38
Resupply Ship in Transit	RST_77	VOLUME	-4725.0	-12.5	15.24	29.07	6.38
Resupply Ship in Transit	RST_78	VOLUME	-4787.5	-12.5	15.24	29.07	6.38
Resupply Ship in Transit	RST_79	VOLUME	-4850.0	-12.5	15.24	29.07	6.38
Resupply Ship in Transit	RST_80	VOLUME	-4912.5	-12.5	15.24	29.07	6.38

Configuration of Platform Equipment

* Building structure heights provided below are referenced above the main deck which is 15 feet above the water surface.

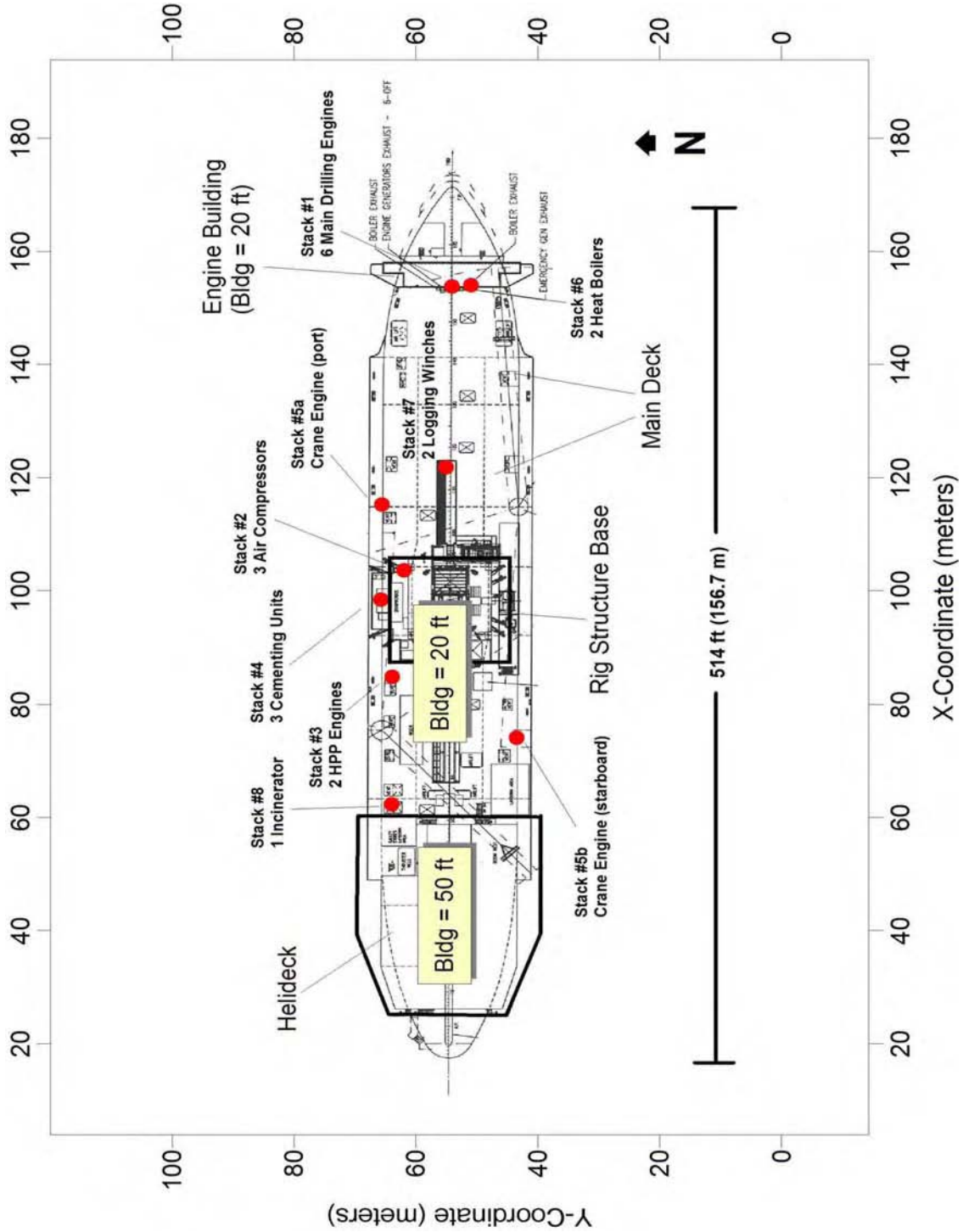

Building Information for ISC-BPIP Analysis

Structure Name	Main Deck		Helideck		Rig Structure Base		Engine Housing	
Height Above Water	4.57 m		19.81 m		10.67 m		10.67 m	
# Structure Corners	11		6		4		4	
Structure	Coordinate		Coordinate		Coordinate		Coordinate	
Corner #	X(m)	Y(m)	X(m)	Y(m)	X(m)	Y(m)	X(m)	Y(m)
1	15.7	55.3	59.0	40.5	81.6	66.0	154.1	47.5
2	32.6	67.8	38.5	40.5	81.6	44.0	154.1	62.5
3	141.6	67.8	23.6	45.0	104.1	44.0	158.5	62.5
4	141.8	66.0	23.6	64.8	104.1	66.0	158.5	47.5
5	158.8	62.5	38.5	69.8	---	---	---	---
6	172.3	55.0	59.0	69.8	---	---	---	---
7	158.8	47.0	---	---	---	---	---	---
8	143.4	44.3	---	---	---	---	---	---
9	141.6	42.3	---	---	---	---	---	---
10	47.5	42.3	---	---	---	---	---	---
11	32.6	42.3	---	---	---	---	---	---

Structure Name	Re-Supply-T		Re-Supply-S		Re-Supply-B	
Height Above Water	13.72 m		3.05 m		7.62 m	
# Structure Corners	11		6		4	
Structure	Coordinate		Coordinate		Coordinate	
Corner #	X(m)	Y(m)	X(m)	Y(m)	X(m)	Y(m)
1	63.0	-29.5	63.0	-12.0	63.0	-34.5
2	63.0	-15.5	63.0	28.0	63.0	-12.0
3	77.0	-15.5	77.0	28.0	77.0	-12.0
4	77.0	-29.5	77.0	-12.0	77.0	-34.5

Building Information for SCREEN3 Analyses

	Building Dimensions (m) [1]		
Source Description	Height	Max. Width	Min. Width
Resupply Ship	13.72	14.00	14.00
Oil Spill Response (Kvichaks)	3.05	4.88	3.66
Oil Spill Response (Nanuq)	13.72	15.24	15.24
Fennica/Nordica	27.43	26.00	21.34
Vladimir Ignatjuk	19.81	17.51	17.51
Talagy	19.81	17.25	13.72
Tor Viking II	24.38	18.00	15.24
Odin Viking II	24.38	16.90	16.90
Balder Viking	24.38	18.00	15.24
Vidar Viking	24.38	18.00	15.24

[1] Information derived from ships specifications and photographs (Ref: Firebaugh Technical Memo).

Air Sciences Inc.	PROJECT TITLE: Shell Offshore, Inc.	BY: S. Pryor	
	PROJECT NO: 180-15-1	PAGE: 13	OF: 21
ENGINEERING CALCULATIONS	SUBJECT: Discoverer Emissions-AK OCS	DATE: September 17, 2009	

Hourly Discoverer Maximum Emissions

Unit ID	Description	Rating	Max fuel consumpt. (MMBtu/hr) [1]	Fuel Use gal/hr	Maximum Emissions (lb/hr) [1] PM_{10}	$PM_{2.5}$	NO_x	SO_2	CO	VOC	Lead	Notes
Frontier Discoverer												
FD-1	Generator Engine	1,325 hp	6.91	51.95	0.20	0.20	0.77	1.10E-02	0.28	0.04	2.01E-04	2
FD-2	Generator Engine	1,325 hp	6.91	51.95	0.20	0.20	0.77	1.10E-02	0.28	0.04	2.01E-04	2
FD-3	Generator Engine	1,325 hp	6.91	51.95	0.20	0.20	0.77	1.10E-02	0.28	0.04	2.01E-04	2
FD-4	Generator Engine	1,325 hp	6.91	51.95	0.20	0.20	0.77	1.10E-02	0.28	0.04	2.01E-04	2
FD-5	Generator Engine	1,325 hp	6.91	51.95	0.20	0.20	0.77	1.10E-02	0.28	0.04	2.01E-04	2
FD-6	Generator Engine	1,325 hp	6.91	51.95	0.20	0.20	0.77	1.10E-02	0.28	0.04	2.01E-04	2
FD-7	Propulsion Engine	7,200 hp	0.00	0.00	0.00	0.00	0.00	0.00E+00	0.00	0.00	0.00E+00	3
FD-8	Em Generator	131 hp	0.92	6.89	0.64	0.64	3.26	1.46E-03	1.79	0.34	2.66E-05	4
FD-9	MLC Compressor	540 hp	3.58	26.90	0.18	0.18	3.55	5.71E-03	3.11	3.55	1.04E-04	5
FD-10	MLC Compressor	540 hp	3.58	26.90	0.18	0.18	3.55	5.71E-03	3.11	3.55	1.04E-04	5
FD-11	MLC Compressor	540 hp	3.58	26.90	0.18	0.18	3.55	5.71E-03	3.11	3.55	1.04E-04	5
FD-12	HPU Engine	250 hp	1.95	14.66	0.10	0.10	5.41	3.11E-03	0.16	0.08	5.66E-05	6
FD-13	HPU Engine	250 hp	1.95	14.66	0.10	0.10	5.41	3.11E-03	0.16	0.08	5.66E-05	6
FD-14	Port Deck Crane	365 hp	2.77	20.78	0.04	0.04	6.20	4.41E-03	0.13	0.04	8.02E-05	6
FD-15	Starbd Deck Crane	365 hp	2.77	20.78	0.04	0.04	6.20	4.41E-03	0.13	0.04	8.02E-05	6
FD-16	Cementing Unit	335 hp	2.62	19.65	0.21	0.21	8.66	4.17E-03	0.48	0.15	7.58E-05	6
FD-17	Cementing Unit	335 hp	2.62	19.65	0.21	0.21	8.66	4.17E-03	0.48	0.15	7.58E-05	6
FD-18	Cementing Unit	147 hp	1.15	8.62	0.09	0.09	3.80	1.83E-03	0.21	0.07	3.33E-05	6
FD-19	Logging Winch	128 hp	1.00	7.51	0.08	0.08	3.31	1.59E-03	0.18	0.06	2.90E-05	6
FD-20	Logging Winch	36 kW	0.34	2.53	0.01	0.01	0.60	5.37E-04	0.04	0.06	9.76E-06	6, 7
FD-21	Heat Boiler	7.97 MMBtu/hr	7.97	59.88	0.19	0.19	1.60	1.27E-02	0.62	0.01	7.17E-05	
FD-22	Heat Boiler	7.97 MMBtu/hr	7.97	59.88	0.19	0.19	1.60	1.27E-02	0.62	0.01	7.17E-05	
FD-23	Incinerator	276 lb/hr			1.13	0.97	0.69	0.35	4.28	0.41	0.03	
FD-31	Resupply Ship - docked		4.09	30.71	1.27	1.27	18.03	0.83	3.88	1.43	1.19E-04	
	Discoverer total while drilling		90.32	678.58	6.03	5.86	88.71	1.31	24.17	13.79	3.17E-02	

Hourly Fleet Maximum Emissions

		Max fuel consumpt. (MMBtu/hr) [1]	Fuel Use gal/hr	Maximum Emissions (lb/hr) [1] PM_{10}	$PM_{2.5}$	NO_x	SO_2	CO	VOC	Lead	Notes
Ice Breaker											
IB ICE Engines		188.64	1,417.30	47.00	41.50	1,108.42	41.42	148.22	26.60	5.47E-03	
IB Incinerators	154 lb/hr			1.02	0.70	0.23	0.19	23.10	7.70	1.64E-02	
Ice Breaker Total		188.64	1,417.30	48.02	42.20	1,108.65	41.62	171.32	34.30	2.19E-02	
Anchor Handler											
AH ICE Engines		180.16	1,353.60	10.59	10.59	91.20	39.56	148.20	17.02	5.22E-03	
AH Boiler		4.00	30.05	0.10	0.10	0.21	0.90	0.15	0.01	3.60E-05	
AH Incinerator	151 lb/hr			1.01	0.69	0.38	0.19	22.68	7.56	1.61E-02	
Anchor Handler Total		184.16	1,383.65	11.69	11.37	91.78	40.65	171.04	24.59	2.14E-02	
Total Ice Management Fleet		*372.80*	*2,800.95*	*59.71*	*53.57*	*1,200.44*	*82.26*	*342.36*	*58.89*	*4.32E-02*	
Resupply Ship - in Transit		*44.41*	*333.65*	*20.04*	*16.07*	*265.11*	*9.75*	*34.89*	*6.26*	*1.29E-03*	
OSR Fleet											
OSR Main Ship ICE Propulsion Engines		46.01	345.67	0.30	0.30	162.70	0.07	0.87	1.18	1.33E-03	6
OSR Main Ship ICE Generators		17.99	135.16	1.22	0.98	107.40	0.03	1.41	0.25	5.22E-04	6
OSR Main Ship Incinerator	125 lb/hr			0.83	0.57	0.19	0.16	18.75	6.25	1.33E-02	
OSR Main Ship Total		64.00	480.83	2.35	1.85	270.28	0.26	21.04	7.69	1.52E-02	
OSR Work Boat ICE Propulsion Engines		12.60	94.67	0.31	0.31	18.43	2.55	0.62	0.31	3.65E-04	
OSR Work Boat ICE Generators		0.25	1.89	0.08	0.08	1.11	0.05	0.24	0.09	7.31E-06	
OSR Work Boats Total		12.85	96.56	0.38	0.38	19.54	2.60	0.85	0.40	3.73E-04	
OSR Total		*76.85*	*577.39*	*2.74*	*2.23*	*289.82*	*2.85*	*21.89*	*8.08*	*1.55E-02*	
	Total All Fleet	494.06	3,711.99	82.49	71.88	1,755.37	94.87	399.14	73.24	6.01E-02	
	Total All	584.38	4,390.58	88.52	77.74	1,844.08	96.18	423.31	87.03	9.18E-02	

Notes

1 All emissions are the maximum 1-hour values
2 Units FD-1-6 (Generator Engines) instantaneous capacity restriction, SCR NOx control effectiveness and Oxidation Catalyst reduction efficiencies applied
3 Not used during drilling
4 Unit FD-8 (Emergency Generator) operation assumed for 120 min/week
5 Units FD-9-11 (MLC Compressors) are Tier 3 engines
6 CDPF PM & CO reduction efficiencies applied
7 Unit FD-20 (Logging Winch) is a Tier 2 engine

Air Sciences Inc.	PROJECT TITLE: Shell Offshore, Inc.	BY: S. Pryor
ENGINEERING CALCULATIONS	PROJECT NO: 180-15-1	PAGE: 14 OF: 21
	SUBJECT: Discoverer Emissions-AK OCS	DATE: September 17, 2009

Base Operating Case [1]

Dailly Discoverer Maximum Emissions

All Units 24 hr/day except the following: Unit FD-23 300 lb/trash per day

Unit FD-8 120 min/week 2 hr/day Unit FD-31 12 hr/day

Unit ID	Description	Rating	Max fuel consumpt. (MMBtu/day)	Fuel Use gal/day	Maximum Emissions (lb/day) [2] PM_{10}	$PM_{2.5}$	NO_x	SO_2	CO	VOC	Lead	Notes
Frontier Discoverer												
FD-1	Generator Engine	1,325 hp	165.94	1,246.77	4.72	4.72	18.57	0.26	6.63	0.85	4.81E-03	3
FD-2	Generator Engine	1,325 hp	165.94	1,246.77	4.72	4.72	18.57	0.26	6.63	0.85	4.81E-03	3
FD-3	Generator Engine	1,325 hp	165.94	1,246.77	4.72	4.72	18.57	0.26	6.63	0.85	4.81E-03	3
FD-4	Generator Engine	1,325 hp	165.94	1,246.77	4.72	4.72	18.57	0.26	6.63	0.85	4.81E-03	3
FD-5	Generator Engine	1,325 hp	165.94	1,246.77	4.72	4.72	18.57	0.26	6.63	0.85	4.81E-03	3
FD-6	Generator Engine	1,325 hp	165.94	1,246.77	4.72	4.72	18.57	0.26	6.63	0.85	4.81E-03	3
FD-7	Propulsion Engine	7,200 hp	0.00	0.00	0.00	0.00	0.00	0.00	0.00	0.00	0.00E+00	4
FD-8	Em Generator	131 hp	1.83	13.78	1.28	1.28	6.52	0.00	3.58	0.67	5.32E-05	5
FD-9	MLC Compressor	540 hp	85.93	645.60	4.26	4.26	85.29	0.14	74.63	85.29	2.49E-03	6
FD-10	MLC Compressor	540 hp	85.93	645.60	4.26	4.26	85.29	0.14	74.63	85.29	2.49E-03	6
FD-11	MLC Compressor	540 hp	85.93	645.60	4.26	4.26	85.29	0.14	74.63	85.29	2.49E-03	6
FD-12	HPU Engine	250 hp	46.84	351.89	2.50	2.50	129.76	0.07	3.96	1.96	1.36E-03	7
FD-13	HPU Engine	250 hp	46.84	351.89	2.50	2.50	129.76	0.07	3.96	1.96	1.36E-03	7
FD-14	Port Deck Crane	365 hp	66.36	498.60	1.03	1.03	148.73	0.11	3.14	0.91	1.92E-03	7
FD-15	Starbd Deck Crane	365 hp	66.36	498.60	1.03	1.03	148.73	0.11	3.14	0.91	1.92E-03	7
FD-16	Cementing Unit	335 hp	17.45	131.09	1.42	1.42	57.75	0.03	3.23	0.99	5.06E-04	7
FD-17	Cementing Unit	335 hp	17.45	131.09	1.42	1.42	57.75	0.03	3.23	0.99	5.06E-04	7
FD-18	Cementing Unit	147 hp	7.66	57.52	0.62	0.62	25.34	0.01	1.42	0.43	2.22E-04	7
FD-19	Logging Winch	128 hp	0.00	0.00	0.00	0.00	0.00	0.00	0.00	0.00	0.00E+00	7, 8
FD-20	Logging Winch	36 kW	0.00	0.00	0.00	0.00	0.00	0.00	0.00	0.00	0.00E+00	7, 8, 9
FD-21	Heat Boiler	7.97 MMBtu/hr	191.28	1,437.14	4.50	4.50	38.50	0.31	14.80	0.27	1.72E-03	
FD-22	Heat Boiler	7.97 MMBtu/hr	191.28	1,437.14	4.50	4.50	38.50	0.31	14.80	0.27	1.72E-03	
FD-23	Incinerator	276 lb/hr			1.23	1.05	0.75	0.38	4.65	0.45	0.03	
FD-31	Resupply Ship - docked		24.53	184.29	7.60	7.60	108.17	4.96	23.30	8.58	7.11E-04	
	Discoverer total while drilling		1,931.31	14,510.44	70.74	70.56	1257.57	8.37	346.87	279.38	8.03E-02	

Daily Fleet Maximum Emissions

Resupply - in Transit 4 hr/day

		Max fuel consumpt. (MMBtu/day)	Fuel Use gal/day	Maximum Emissions (lb/day) [2] PM_{10}	$PM_{2.5}$	NO_x	SO_2	CO	VOC	Lead	Notes
Ice Breaker											
IB ICE Engines		4,527.36	34,015.24	1127.93	996.02	26,602.13	994.14	3557.21	638.45	1.31E-01	
IB Incinerators	154 lb/hr			24.58	16.82	5.54	4.62	554.40	184.80	3.94E-01	
Ice Breaker Total		4,527.36	34,015.24	1152.51	1012.84	26,607.68	998.76	4111.61	823.25	5.25E-01	
Anchor Handler											
AH ICE Engines		4,323.86	32,486.30	254.06	254.06	2,188.78	949.46	3,556.90	408.53	1.25E-01	
AH Boiler		96.00	721.27	2.38	2.38	4.94	21.52	3.61	0.14	8.64E-04	
AH Incinerator	151 lb/hr			24.14	16.51	9.07	4.54	544.44	181.48	3.87E-01	
Anchor Handler Total		4,419.86	33,207.58	280.58	272.96	2,202.80	975.51	4104.94	590.16	5.13E-01	
Total Ice Management Fleet		*8,947.22*	*67,222.81*	*1433.09*	*1285.79*	*28,810.47*	*1974.27*	*8216.55*	*1413.41*	*1.04E+00*	
Resupply Ship - in Transit		*177.63*	1,334.60	*80.16*	*64.29*	*1,060.44*	*39.01*	*139.57*	*25.05*	*5.15E-03*	
OSR Fleet											
OSR Main Ship ICE Propulsion Engines		399.29	3,000.00	2.64	2.64	1,412.03	0.64	7.57	10.27	1.16E-02	7, 10
OSR Main Ship ICE Generators		106.48	800.00	7.21	5.78	635.66	0.17	8.37	1.50	3.09E-03	7, 10
OSR Main Ship Incinerator	125 lb/hr			19.95	13.65	4.50	3.75	450.00	150.00	3.20E-01	
OSR Main Ship Total		505.77	3,800.00	29.80	22.08	2,052.20	4.56	465.94	161.77	3.34E-01	
OSR Work Boat ICE Propulsion Engines		302.40	2,272.01	7.33	7.33	442.29	61.09	14.76	7.43	8.77E-03	
OSR Work Boat ICE Generators		6.05	45.44	1.87	1.87	26.67	1.22	5.75	2.12	1.75E-04	
OSR Work Boats Total		308.45	2,317.45	9.21	9.21	468.96	62.31	20.51	9.55	8.94E-03	
OSR Total		*814.22*	*6,117.45*	*39.01*	*31.28*	*2,521.16*	*66.87*	*486.44*	*171.31*	*3.43E-01*	
	Total All Fleet	9,939.07	74,674.86	1552.26	1381.37	32,392.07	2080.15	8842.57	1609.77	1.39E+00	
	Total All	11,870.38	89,185.30	1622.99	1451.93	33,649.64	2088.52	9189.44	1889.15	1.47E+00	

Notes

1 Base Operating Case: More than one of the two HPU units operating that day (greater than 352 gallons per day), and incineration is limited to 300 lb feed per day.
2 All emissions are the maximum 24-hour values
3 Units FD-1-6 (Generator Engines) instantaneous capacity restriction, SCR NOx control effectiveness and Oxidation Catalyst reduction efficiencies applied
4 Not used during drilling 0%
5 Unit FD-8 (Emergency Generator) operation assumed for 120 min/week
6 Units FD-9-11 (MLC Compressors) are Tier 3 engines
7 CDPF PM & CO reduction efficiencies applied
8 Units FD-19 & 20 (Logging Winches) cannot operate simultaneously with cementing units, emissions combined with cementing units. 0%
9 Unit FD-20 (Logging Winch) is a Tier 2 engine
10 OSR Main Ship Propulsion and Generator Engines restriction applied

Air Sciences Inc.	PROJECT TITLE: Shell Offshore, Inc.	BY: S. Pryor
ENGINEERING CALCULATIONS	PROJECT NO: 180-15-1	PAGE: 15 OF: 21
	SUBJECT: Discoverer Emissions-AK OCS	DATE: September 17, 2009

Alternate Operating Scenario #1 [1]

Dailly Discoverer Maximum Emissions

All Units 24 hr/day except the following: Unit FD-23 800 lb/trash per day

Unit FD-8 120 min/week 2 hr/day Unit FD-31 12 hr/day

Unit ID	Description	Rating	Max fuel consumpt. (MMBtu/day)	Fuel Use gal/day	Maximum Emissions (lb/day) [2] PM_{10}	$PM_{2.5}$	NO_x	SO_2	CO	VOC	Lead	Notes
Frontier Discoverer												
FD-1	Generator Engine	1,325 hp	165.94	1,246.77	4.72	4.72	18.57	0.26	6.63	0.85	4.81E-03	3
FD-2	Generator Engine	1,325 hp	165.94	1,246.77	4.72	4.72	18.57	0.26	6.63	0.85	4.81E-03	3
FD-3	Generator Engine	1,325 hp	165.94	1,246.77	4.72	4.72	18.57	0.26	6.63	0.85	4.81E-03	3
FD-4	Generator Engine	1,325 hp	165.94	1,246.77	4.72	4.72	18.57	0.26	6.63	0.85	4.81E-03	3
FD-5	Generator Engine	1,325 hp	165.94	1,246.77	4.72	4.72	18.57	0.26	6.63	0.85	4.81E-03	3
FD-6	Generator Engine	1,325 hp	165.94	1,246.77	4.72	4.72	18.57	0.26	6.63	0.85	4.81E-03	3
FD-7	Propulsion Engine	7,200 hp	0.00	0.00	0.00	0.00	0.00	0.00	0.00	0.00	0.00E+00	4
FD-8	Em Generator	131 hp	1.83	13.78	1.28	1.28	6.52	0.00	3.58	0.67	5.32E-05	5
FD-9	MLC Compressor	540 hp	85.93	645.60	4.26	4.26	85.29	0.14	74.63	85.29	2.49E-03	6
FD-10	MLC Compressor	540 hp	85.93	645.60	4.26	4.26	85.29	0.14	74.63	85.29	2.49E-03	6
FD-11	MLC Compressor	540 hp	85.93	645.60	4.26	4.26	85.29	0.14	74.63	85.29	2.49E-03	6
FD-12	HPU Engine	250 hp	46.84	351.89	2.50	2.50	129.76	0.07	3.96	1.96	1.36E-03	7
FD-13	HPU Engine	250 hp	0.00	0.00	0.00	0.00	0.00	0.00	0.00	0.00	0.00E+00	7
FD-14	Port Deck Crane	365 hp	66.36	498.60	1.03	1.03	148.73	0.11	3.14	0.91	1.92E-03	7
FD-15	Starbd Deck Crane	365 hp	66.36	498.60	1.03	1.03	148.73	0.11	3.14	0.91	1.92E-03	7
FD-16	Cementing Unit	335 hp	17.45	131.09	1.42	1.42	57.75	0.03	3.23	0.99	5.06E-04	7
FD-17	Cementing Unit	335 hp	17.45	131.09	1.42	1.42	57.75	0.03	3.23	0.99	5.06E-04	7
FD-18	Cementing Unit	147 hp	7.66	57.52	0.62	0.62	25.34	0.01	1.42	0.43	2.22E-04	7
FD-19	Logging Winch	128 hp	0.00	0.00	0.00	0.00	0.00	0.00	0.00	0.00	0.00E+00	7, 8
FD-20	Logging Winch	36 kW	0.00	0.00	0.00	0.00	0.00	0.00	0.00	0.00	0.00E+00	7, 8, 9
FD-21	Heat Boiler	7.97 MMBtu/hr	191.28	1,437.14	4.50	4.50	38.50	0.31	14.80	0.27	1.72E-03	
FD-22	Heat Boiler	7.97 MMBtu/hr	191.28	1,437.14	4.50	4.50	38.50	0.31	14.80	0.27	1.72E-03	
FD-23	Incinerator	276 lb/hr			3.28	2.80	2.00	1.00	12.40	1.20	0.09	
FD-31	Resupply Ship - docked		24.53	184.29	7.60	7.60	108.17	4.96	23.30	8.58	7.11E-04	
	Discoverer total while drilling		1,884.47	14,158.55	70.29	69.81	1129.05	8.92	350.67	278.17	1.32E-01	

Daily Fleet Maximum Emissions

Resupply - in Transit 4 hr/day

		Max fuel consumpt. (MMBtu/day)	Fuel Use gal/day	Maximum Emissions (lb/day) [2] PM_{10}	$PM_{2.5}$	NO_x	SO_2	CO	VOC	Lead	Notes
Ice Breaker											
IB ICE Engines		4,527.36	34,015.24	1127.93	996.02	26,602.13	994.14	3557.21	638.45	1.31E-01	
IB Incinerators	154 lb/hr			24.58	16.82	5.54	4.62	554.40	184.80	3.94E-01	
Ice Breaker Total		4,527.36	34,015.24	1152.51	1012.84	26,607.68	998.76	4111.61	823.25	5.25E-01	
Anchor Handler											
AH ICE Engines		4,323.86	32,486.30	254.06	254.06	2,188.78	949.46	3,556.90	408.53	1.25E-01	
AH Boiler		96.00	721.27	2.38	2.38	4.94	21.52	3.61	0.14	8.64E-04	
AH Incinerator	151 lb/hr			24.14	16.51	9.07	4.54	544.44	181.48	3.87E-01	
Anchor Handler Total		4,419.86	33,207.58	280.58	272.96	2,202.80	975.51	4104.94	590.16	5.13E-01	
Total Ice Management Fleet		*8,947.22*	*67,222.81*	*1433.09*	*1285.79*	*28,810.47*	*1974.27*	*8216.55*	*1413.41*	*1.04E+00*	
Resupply Ship - in Transit		*177.63*	1,334.60	*80.16*	*64.29*	*1,060.44*	*39.01*	*139.57*	*25.05*	*5.15E-03*	
OSR Fleet											
OSR Main Ship ICE Propulsion Engines		399.29	3,000.00	2.64	2.64	1,412.03	0.64	7.57	10.27	1.16E-02	7, 10
OSR Main Ship ICE Generators		106.48	800.00	7.21	5.78	635.66	0.17	8.37	1.50	3.09E-03	7, 10
OSR Main Ship Incinerator	125 lb/hr			19.95	13.65	4.50	3.75	450.00	150.00	3.20E-01	
OSR Main Ship Total		505.77	3,800.00	29.80	22.08	2,052.20	4.56	465.94	161.77	3.34E-01	
OSR Work Boat ICE Propulsion Engines		302.40	2,272.01	7.33	7.33	442.29	61.09	14.76	7.43	8.77E-03	
OSR Work Boat ICE Generators		6.05	45.44	1.87	1.87	26.67	1.22	5.75	2.12	1.75E-04	
OSR Work Boats Total		308.45	2,317.45	9.21	9.21	468.96	62.31	20.51	9.55	8.94E-03	
OSR Total		*814.22*	*6,117.45*	*39.01*	*31.28*	*2,521.16*	*66.87*	*486.44*	*171.31*	*3.43E-01*	
	Total All Fleet	9,939.07	74,674.86	1552.26	1381.37	32,392.07	2080.15	8842.57	1609.77	1.39E+00	
	Total All	11,823.55	88,833.41	1622.54	1451.18	33,521.13	2089.07	9193.23	1887.94	1.52E+00	

Notes

1 Operating Scenario #1: More than no use but less than one of the two HPU units operating that day (more than zero but less than or equal to 352 gallons per day), and incineration is limited to 800 lb feed per day.

2 All emissions are the maximum 24-hour values

3 Units FD-1-6 (Generator Engines) instantaneous capacity restriction, SCR NOx control effectiveness and Oxidation Catalyst reduction efficiencies applied

4 Not used during drilling 0%

5 Unit FD-8 (Emergency Generator) operation assumed for 120 min/week

6 Units FD-9-11 (MLC Compressors) are Tier 3 engines

7 CDPF PM & CO reduction efficiencies applied

8 Units FD-19 & 20 (Logging Winches) cannot operate simultaneously with cementing units, emissions combined with cementing units. 0%

9 Unit FD-20 (Logging Winch) is a Tier 2 engine

10 OSR Main Ship Propulsion and Generator Engines restriction applied

Air Sciences Inc.	PROJECT TITLE: Shell Offshore, Inc.	BY: S. Pryor	
	PROJECT NO: 180-15-1	PAGE: 16	OF: 21
ENGINEERING CALCULATIONS	SUBJECT: Discoverer Emissions-AK OCS	DATE: September 17, 2009	

Alternate Operating Scenario #2 [1]

Dailly Discoverer Maximum Emissions

All Units 24 hr/day except the following: Unit FD-23 1300 lb/trash per day

Unit FD-8 120 min/week 2 hr/day Unit FD-31 12 hr/day

Unit ID	Description	Rating	Max fuel consumpt. (MMBtu/day)	Fuel Use gal/day	Maximum Emissions (lb/day) [2] PM_{10}	$PM_{2.5}$	NO_x	SO_2	CO	VOC	Lead	Notes
Frontier Discoverer												
FD-1	Generator Engine	1,325 hp	165.94	1,246.77	4.72	4.72	18.57	0.26	6.63	0.85	4.81E-03	3
FD-2	Generator Engine	1,325 hp	165.94	1,246.77	4.72	4.72	18.57	0.26	6.63	0.85	4.81E-03	3
FD-3	Generator Engine	1,325 hp	165.94	1,246.77	4.72	4.72	18.57	0.26	6.63	0.85	4.81E-03	3
FD-4	Generator Engine	1,325 hp	165.94	1,246.77	4.72	4.72	18.57	0.26	6.63	0.85	4.81E-03	3
FD-5	Generator Engine	1,325 hp	165.94	1,246.77	4.72	4.72	18.57	0.26	6.63	0.85	4.81E-03	3
FD-6	Generator Engine	1,325 hp	165.94	1,246.77	4.72	4.72	18.57	0.26	6.63	0.85	4.81E-03	3
FD-7	Propulsion Engine	7,200 hp	0.00	0.00	0.00	0.00	0.00	0.00	0.00	0.00	0.00E+00	4
FD-8	Em Generator	131 hp	1.83	13.78	1.28	1.28	6.52	0.00	3.58	0.67	5.32E-05	5
FD-9	MLC Compressor	540 hp	85.93	645.60	4.26	4.26	85.29	0.14	74.63	85.29	2.49E-03	6
FD-10	MLC Compressor	540 hp	85.93	645.60	4.26	4.26	85.29	0.14	74.63	85.29	2.49E-03	6
FD-11	MLC Compressor	540 hp	85.93	645.60	4.26	4.26	85.29	0.14	74.63	85.29	2.49E-03	6
FD-12	HPU Engine	250 hp	0.00	0.00	0.00	0.00	0.00	0.00	0.00	0.00	0.00E+00	7
FD-13	HPU Engine	250 hp	0.00	0.00	0.00	0.00	0.00	0.00	0.00	0.00	0.00E+00	7
FD-14	Port Deck Crane	365 hp	66.36	498.60	1.03	1.03	148.73	0.11	3.14	0.91	1.92E-03	7
FD-15	Starbd Deck Crane	365 hp	66.36	498.60	1.03	1.03	148.73	0.11	3.14	0.91	1.92E-03	7
FD-16	Cementing Unit	335 hp	17.45	131.09	1.42	1.42	57.75	0.03	3.23	0.99	5.06E-04	7
FD-17	Cementing Unit	335 hp	17.45	131.09	1.42	1.42	57.75	0.03	3.23	0.99	5.06E-04	7
FD-18	Cementing Unit	147 hp	7.66	57.52	0.62	0.62	25.34	0.01	1.42	0.43	2.22E-04	7
FD-19	Logging Winch	128 hp	0.00	0.00	0.00	0.00	0.00	0.00	0.00	0.00	0.00E+00	7, 8
FD-20	Logging Winch	36 kW	0.00	0.00	0.00	0.00	0.00	0.00	0.00	0.00	0.00E+00	7, 8, 9
FD-21	Heat Boiler	7.97 MMBtu/hr	191.28	1,437.14	4.50	4.50	38.50	0.31	14.80	0.27	1.72E-03	
FD-22	Heat Boiler	7.97 MMBtu/hr	191.28	1,437.14	4.50	4.50	38.50	0.31	14.80	0.27	1.72E-03	
FD-23	Incinerator	276 lb/hr			5.33	4.55	3.25	1.63	20.15	1.95	0.14	
FD-31	Resupply Ship - docked		24.53	184.29	7.60	7.60	108.17	4.96	23.30	8.58	7.11E-04	
	Discoverer total while drilling		1,837.64	13,806.66	69.84	69.06	1000.54	9.47	354.46	276.96	1.84E-01	

Daily Fleet Maximum Emissions

Resupply - in Transit 4 hr/day

		Max fuel consumpt. (MMBtu/day)	Fuel Use gal/day	Maximum Emissions (lb/day) [2] PM_{10}	$PM_{2.5}$	NO_x	SO_2	CO	VOC	Lead	Notes
Ice Breaker											
IB ICE Engines		4,527.36	34,015.24	1127.93	996.02	26,602.13	994.14	3557.21	638.45	1.31E-01	
IB Incinerators	154 lb/hr			24.58	16.82	5.54	4.62	554.40	184.80	3.94E-01	
Ice Breaker Total		4,527.36	34,015.24	1152.51	1012.84	26,607.68	998.76	4111.61	823.25	5.25E-01	
Anchor Handler											
AH ICE Engines		4,323.86	32,486.30	254.06	254.06	2,188.78	949.46	3,556.90	408.53	1.25E-01	
AH Boiler		96.00	721.27	2.38	2.38	4.94	21.52	3.61	0.14	8.64E-04	
AH Incinerator	151 lb/hr			24.14	16.51	9.07	4.54	544.44	181.48	3.87E-01	
Anchor Handler Total		4,419.86	33,207.58	280.58	272.96	2,202.80	975.51	4104.94	590.16	5.13E-01	
Total Ice Management Fleet		*8,947.22*	*67,222.81*	*1433.09*	*1285.79*	*28,810.47*	*1974.27*	*8216.55*	*1413.41*	*1.04E+00*	
Resupply Ship - in Transit		*177.63*	1,334.60	*80.16*	*64.29*	*1,060.44*	*39.01*	*139.57*	*25.05*	*5.15E-03*	
OSR Fleet											
OSR Main Ship ICE Propulsion Engines		399.29	3,000.00	2.64	2.64	1,412.03	0.64	7.57	10.27	1.16E-02	7, 10
OSR Main Ship ICE Generators		106.48	800.00	7.21	5.78	635.66	0.17	8.37	1.50	3.09E-03	7, 10
OSR Main Ship Incinerator	125 lb/hr			19.95	13.65	4.50	3.75	450.00	150.00	3.20E-01	
OSR Main Ship Total		505.77	3,800.00	29.80	22.08	2,052.20	4.56	465.94	161.77	3.34E-01	
OSR Work Boat ICE Propulsion Engines		302.40	2,272.01	7.33	7.33	442.29	61.09	14.76	7.43	8.77E-03	
OSR Work Boat ICE Generators		6.05	45.44	1.87	1.87	26.67	1.22	5.75	2.12	1.75E-04	
OSR Work Boats Total		308.45	2,317.45	9.21	9.21	468.96	62.31	20.51	9.55	8.94E-03	
OSR Total		*814.22*	*6,117.45*	*39.01*	*31.28*	*2,521.16*	*66.87*	*486.44*	*171.31*	*3.43E-01*	
	Total All Fleet	9,939.07	74,674.86	1552.26	1381.37	32,392.07	2080.15	8842.57	1609.77	1.39E+00	
	Total All	11,776.71	88,481.52	1622.09	1450.43	33,392.61	2089.62	9197.03	1886.74	1.57E+00	

Notes

1 Operating Scenario #2: No HPU use that day and incineration is limited to 1300 lb feed per day.
2 All emissions are the maximum 24-hour values
3 Units FD-1-6 (Generator Engines) instantaneous capacity restriction, SCR NOx control effectiveness and Oxidation Catalyst reduction efficiencies applied
4 Not used during drilling 0%
5 Unit FD-8 (Emergency Generator) operation assumed for 120 min/week
6 Units FD-9-11 (MLC Compressors) are Tier 3 engines
7 CDPF PM & CO reduction efficiencies applied
8 Units FD-19 & 20 (Logging Winches) cannot operate simultaneously with cementing units, emissions combined with cementing units. 0%
9 Unit FD-20 (Logging Winch) is a Tier 2 engine
10 OSR Main Ship Propulsion and Generator Engines restriction applied

Air Sciences Inc.	PROJECT TITLE: Shell Offshore, Inc.	BY: S. Pryor
	PROJECT NO: 180-15-1	PAGE: 17 / OF: 21
ENGINEERING CALCULATIONS	SUBJECT: Discoverer Emissions-AK OCS	DATE: September 17, 2009

Base Operating Case

Yearly Discoverer Maximum Emissions

Time at Drill Site	168 days/yr	4032 hrs/yr	Units FD-14 & 15	63 days/year	1512 hrs/yr		
Unit FD-8	120 min/week	48 hrs/yr	Unit FD-23	300 lb/trash per day			
Units FD-9-11	63 days/yr	1512 hrs/yr	Unit FD-31	12 hr/day	8 days/year	96 hrs/yr	
Units FD-12-13	63 days/yr	1512 hrs/yr					

Unit ID	Description	Rating	Max fuel consumpt. (MMBtu/yr)	Fuel Use gal/yr	Maximum Emissions (ton/yr) PM_{10}	$PM_{2.5}$	NO_x	SO_2	CO	VOC	Lead	HAPs	Notes
Frontier Discoverer													
FD-1	Generator Engine	1,325 hp	27,878	209,457	0.40	0.40	1.56	2.22E-02	0.56	0.07	4.04E-04	1.70E-02	1
FD-2	Generator Engine	1,325 hp	27,878	209,457	0.40	0.40	1.56	2.22E-02	0.56	0.07	4.04E-04	1.70E-02	1
FD-3	Generator Engine	1,325 hp	27,878	209,457	0.40	0.40	1.56	2.22E-02	0.56	0.07	4.04E-04	1.70E-02	1
FD-4	Generator Engine	1,325 hp	27,878	209,457	0.40	0.40	1.56	2.22E-02	0.56	0.07	4.04E-04	1.70E-02	1
FD-5	Generator Engine	1,325 hp	27,878	209,457	0.40	0.40	1.56	2.22E-02	0.56	0.07	4.04E-04	1.70E-02	1
FD-6	Generator Engine	1,325 hp	27,878	209,457	0.40	0.40	1.56	2.22E-02	0.56	0.07	4.04E-04	1.70E-02	1
FD-7	Propulsion Engine	7,200 hp	0	0	0.00	0.00	0.00	0.00E+00	0.00	0.00	0.00E+00	0.00E+00	2
FD-8	Em Generator	131 hp	44	331	1.53E-02	1.53E-02	7.82E-02	3.51E-05	4.30E-02	8.06E-03	6.38E-07	8.65E-05	3
FD-9	MLC Compressor	540 hp	5,413	40,673	0.13	0.13	2.69	4.32E-03	2.35	2.69	7.85E-05	1.06E-02	4
FD-10	MLC Compressor	540 hp	5,413	40,673	0.13	0.13	2.69	4.32E-03	2.35	2.69	7.85E-05	1.06E-02	4
FD-11	MLC Compressor	540 hp	0	0	0.00	0.00	0.00	0.00E+00	0.00	0.00	0.00E+00	0.00E+00	2, 4
FD-12	HPU Engine	250 hp	2,951	22,169	0.08	0.08	4.09	2.35E-03	0.12	0.06	4.28E-05	6.55E-04	5, 6
FD-13	HPU Engine	250 hp	2,951	22,169	0.08	0.08	4.09	2.35E-03	0.12	0.06	4.28E-05	6.55E-04	5, 6
FD-14	Port Deck Crane	365 hp	4,181	31,412	0.03	0.03	4.68	3.33E-03	0.10	0.03	6.06E-05	9.29E-04	5, 7
FD-15	Starbd Deck Crane	365 hp	4,181	31,412	0.03	0.03	4.68	3.33E-03	0.10	0.03	6.06E-05	9.29E-04	5, 7
FD-16	Cementing Unit	335 hp	2,931	22,022	0.12	0.12	4.85	2.34E-03	0.27	0.08	4.25E-05	6.51E-04	5, 8
FD-17	Cementing Unit	335 hp	2,931	22,022	0.12	0.12	4.85	2.34E-03	0.27	0.08	4.25E-05	6.51E-04	5, 8
FD-18	Cementing Unit	147 hp	1,286	9,664	0.05	0.05	2.13	1.03E-03	0.12	0.04	1.86E-05	2.86E-04	5, 8
FD-19	Logging Winch	128 hp	0	0	0.00	0.00	0.00	0.00E+00	0.00	0.00	0.00E+00	0.00E+00	5, 9
FD-20	Logging Winch	36 kW	0	0	0.00	0.00	0.00	0.00E+00	0.00	0.00	0.00E+00	0.00E+00	5, 9
FD-21	Heat Boiler	7.97 MMBtu/hr	32,135	241,439	0.38	0.38	3.23	2.56E-02	1.24	0.02	1.45E-04	5.32E-03	
FD-22	Heat Boiler	7.97 MMBtu/hr	32,135	241,439	0.38	0.38	3.23	2.56E-02	1.24	0.02	1.45E-04	5.32E-03	
FD-23	Incinerator	276 lb/hr			0.10	0.09	0.06	0.03	0.39	0.04	2.68E-03	3.16E-03	
FD-31	Resupply Ship - docked		196	1,474	0.03	0.03	0.43	0.02	0.09	0.03	2.85E-06	3.86E-04	10
	Discoverer total while drilling		264,019	1,983,644	4.06	4.05	51.15	0.26	12.17	6.31	5.87E-03	1.42E-01	

Yearly Fleet Maximum Emissions

IB & AH - For NOx ICE Engines only	38%	of	168 days/year	1532 hrs/yr	
IB & AH - For all remaining pollutants	100%	of	168 days/year	4032 hrs/yr	
Resupply - in Transit	8 trips/yr		4 hr/trip	32 hrs/yr	

		Max fuel consumpt. (MMBtu/yr)	Fuel Use gal/yr	Maximum Emissions (ton/yr) PM_{10}	$PM_{2.5}$	NO_x	SO_2	CO	VOC	Lead	HAPs	Notes
Ice Breaker												
IB ICE Engines		760,596	5,714,560	95	84	849	84	299	54	1.10E-02	1.49	11
IB Incinerators	154 lb/hr			2.06	1.41	0.47	0.39	46.57	15.52	3.31E-02	3.89E-02	
Ice Breaker Total		760,596	5,714,560	97	85	850	84	345	69	4.41E-02	1.53	
Anchor Handler												
AH ICE Engines		726,409	5,457,699	21.34	21.34	69.87	79.75	298.78	34.32	1.05E-02	1.43	12
AH Boiler		16,128	121,174	0.20	0.20	0.42	1.81	0.30	0.01	7.26E-05	2.67E-03	12
AH Incinerator	151 lb/hr			2.03	1.39	0.76	0.38	45.73	15.24	3.25E-02	3.82E-02	
Anchor Handler Total		742,537	5,578,873	23.57	22.93	71.04	81.94	344.82	49.57	4.31E-02	1.47	
Total Ice Management Fleet		*1,503,133*	*11,293,433*	*120.38*	*108.01*	*920.65*	*165.84*	*690.19*	*118.73*	*8.72E-02*	*3.00*	
Resupply Ship - in Transit		*1,421*	*10,677*	*0.32*	*0.26*	*4.24*	*0.16*	*0.56*	*0.10*	*2.06E-05*	*2.79E-03*	13
OSR Fleet												
OSR Main Ship ICE Propulsion Engines		67,081.39	504,000	0.22	0.22	118.61	0.05	0.64	0.86	9.73E-04	1.32E-02	5, 14
OSR Main Ship ICE Generators		17,888.37	134,400	0.61	0.49	53.40	0.01	0.70	0.13	2.59E-04	3.52E-03	5, 14
OSR Main Ship Incinerator	125 lb/hr			1.68	1.15	0.38	0.32	37.80	12.60	2.68E-02	3.16E-02	
OSR Main Ship Total		84,970	638,400	2.50	1.85	172.38	0.38	39.14	13.59	2.81E-02	4.83E-02	
OSR Work Boats Total		51,819	389,332	0.77	0.77	39.39	5.23	1.72	0.80	7.51E-04	1.02E-01	
OSR Total		*136,789*	*1,027,732*	*3*	*3*	*212*	*6*	*41*	*14*	*2.88E-02*	*1.50E-01*	
Total All Fleet		1,641,343	12,331,841	124	111	1,137	172	732	133	1.16E-01	3.16	
Total All		1,905,362	14,315,485	128	115	1,188	172	744	140	1.22E-01	3.30	

Notes definitions see page 20

Units	FD-1-6,each	FD-1-6,total	FD-7	FD-8	FD-9	FD-10	FD-11	FD-12	FD-13	FD-14	FD-15	FD-16	FD-17	FD-18	FD-19	FD-20	FD-21	FD-22	FD-23	TOTAL
											MMBtu/yr									
Fuel Consumption	27,878	167,270	0	44	5,413	5,413	0	2,951	2,951	4,181	4,181	2,931	2,931	1,286	0	0	32,135	32,135		
HAPs											ton/yr									
Acaldehyde	3.21E-03	1.92E-02	0.00	1.69E-05	2.08E-03	2.08E-03	0.00	1.13E-04	1.13E-04	1.60E-04	1.60E-04	1.12E-04	1.12E-04	4.93E-05	0.00	0.00	0.00E+00	0.00E+00	0.00E+00	**2.42E-02**
Acenaphthene	5.94E-06	3.56E-05	0.00	3.13E-08	3.84E-06	3.84E-06	0.00	2.09E-07	2.09E-07	2.97E-07	2.97E-07	2.08E-07	2.08E-07	9.13E-08	0.00	0.00	2.55E-06	2.55E-06	0.00E+00	**5.00E-05**
Acenaphthylene	2.12E-05	1.27E-04	0.00	1.11E-07	1.37E-05	1.37E-05	0.00	7.47E-07	7.47E-07	1.06E-06	1.06E-06	7.42E-07	7.42E-07	3.25E-07	0.00	0.00	3.05E-08	3.05E-08	0.00E+00	**1.60E-04**
Acrolein	3.87E-04	2.32E-03	0.00	2.04E-06	2.50E-04	2.50E-04	0.00	1.36E-05	1.36E-05	1.93E-05	1.93E-05	1.36E-05	1.36E-05	5.95E-06	0.00	0.00	0.00E+00	0.00E+00	0.00E+00	**2.92E-03**
Anthracene	7.82E-06	4.69E-05	0.00	4.12E-08	5.06E-06	5.06E-06	0.00	2.76E-07	2.76E-07	3.91E-07	3.91E-07	2.74E-07	2.74E-07	1.20E-07	0.00	0.00	1.47E-07	1.47E-07	0.00E+00	**5.94E-05**
Benzene	3.90E-03	2.34E-02	0.00	2.05E-05	2.53E-03	2.53E-03	0.00	1.38E-04	1.38E-04	1.95E-04	1.95E-04	1.37E-04	1.37E-04	6.00E-05	0.00	0.00	2.58E-05	2.58E-05	0.00E+00	**2.95E-02**
Benzo(a)anthracene	7.03E-06	4.22E-05	0.00	3.70E-08	4.55E-06	4.55E-06	0.00	2.48E-07	2.48E-07	3.51E-07	3.51E-07	2.46E-07	2.46E-07	1.08E-07	0.00	0.00	4.84E-07	4.84E-07	0.00E+00	**5.41E-05**
Benzo(a)pyrene	7.86E-07	4.72E-06	0.00	4.14E-09	5.09E-07	5.09E-07	0.00	2.77E-08	2.77E-08	3.93E-08	3.93E-08	2.76E-08	2.76E-08	1.21E-08	0.00	0.00	0.00E+00	0.00E+00	0.00E+00	**5.94E-06**
Benzo(b)fluoranthene	4.14E-07	2.49E-06	0.00	2.18E-09	2.68E-07	2.68E-07	0.00	1.46E-08	1.46E-08	2.07E-08	2.07E-08	1.45E-08	1.45E-08	6.37E-09	0.00	0.00	0.00E+00	0.00E+00	0.00E+00	**3.13E-06**
Benzo(b,k)fluoranthene	0.00	0.00	0.00	0.00	0.00	0.00	0.00	0.00	0.00	0.00	0.00	0.00	0.00	0.00	0.00	0.00	1.79E-07	1.79E-07	0.00E+00	**3.57E-07**
Benzo(g,h,I)perylene	2.04E-06	1.23E-05	0.00	1.08E-08	1.32E-06	1.32E-06	0.00	7.21E-08	7.21E-08	1.02E-07	1.02E-07	7.17E-08	7.17E-08	3.14E-08	0.00	0.00	2.73E-07	2.73E-07	0.00E+00	**1.60E-05**
Benzo(k)fluoranthene	6.48E-07	3.89E-06	0.00	3.41E-09	4.20E-07	4.20E-07	0.00	2.29E-08	2.29E-08	3.24E-08	3.24E-08	2.27E-08	2.27E-08	9.97E-09	0.00	0.00	0.00E+00	0.00E+00	0.00E+00	**4.90E-06**
1,3-Butadiene	1.64E-04	9.81E-04	0.00	8.61E-07	1.06E-04	1.06E-04	0.00	5.77E-06	5.77E-06	8.17E-06	8.17E-06	5.73E-06	5.73E-06	2.51E-06	0.00	0.00	0.00E+00	0.00E+00	0.00E+00	**1.24E-03**
Chrysene	1.48E-06	8.86E-06	0.00	7.77E-09	9.55E-07	9.55E-07	0.00	5.21E-08	5.21E-08	7.38E-08	7.38E-08	5.17E-08	5.17E-08	2.27E-08	0.00	0.00	2.87E-07	2.87E-07	0.00E+00	**1.17E-05**
Dibenz(a,h)anthracene	2.44E-06	1.46E-05	0.00	1.28E-08	1.58E-06	1.58E-06	0.00	8.60E-08	8.60E-08	1.22E-07	1.22E-07	8.54E-08	8.54E-08	3.75E-08	0.00	0.00	2.02E-07	2.02E-07	0.00E+00	**1.88E-05**
Ethylbenzene	0.00	0.00	0.00	0.00	0.00	0.00	0.00	0.00	0.00	0.00	0.00	0.00	0.00	0.00	0.00	0.00	7.68E-06	7.68E-06	0.00E+00	**1.54E-05**
Fluoranthene	3.18E-05	1.91E-04	0.00	1.67E-07	2.06E-05	2.06E-05	0.00	1.12E-06	1.12E-06	1.59E-06	1.59E-06	1.12E-06	1.12E-06	4.89E-07	0.00	0.00	5.84E-07	5.84E-07	0.00E+00	**2.42E-04**
Fluorene	1.22E-04	7.33E-04	0.00	6.43E-07	7.90E-05	7.90E-05	0.00	4.31E-06	4.31E-06	6.10E-06	6.10E-06	4.28E-06	4.28E-06	1.88E-06	0.00	0.00	5.40E-07	5.40E-07	0.00E+00	**9.24E-04**
Formaldehyde	4.93E-03	2.96E-02	0.00	2.60E-05	3.19E-03	3.19E-03	0.00	1.74E-04	1.74E-04	2.47E-04	2.47E-04	1.73E-04	1.73E-04	7.59E-05	0.00	0.00	3.98E-03	3.98E-03	0.00E+00	**4.53E-02**
Indeno(1,2,3-cd)pyrene	1.57E-06	9.41E-06	0.00	8.25E-09	1.02E-06	1.02E-06	0.00	5.53E-08	5.53E-08	7.84E-08	7.84E-08	5.50E-08	5.50E-08	2.41E-08	0.00	0.00	2.58E-07	2.58E-07	0.00E+00	**1.24E-05**
Naphthalene	3.55E-04	2.13E-03	0.00	1.87E-06	2.30E-04	2.30E-04	0.00	1.25E-05	1.25E-05	1.77E-05	1.77E-05	1.24E-05	1.24E-05	5.45E-06	0.00	0.00	1.36E-04	1.36E-04	0.00E+00	**2.95E-03**
Phenanthrene	1.23E-04	7.38E-04	0.00	6.47E-07	7.96E-05	7.96E-05	0.00	4.34E-06	4.34E-06	6.15E-06	6.15E-06	4.31E-06	4.31E-06	1.89E-06	0.00	0.00	1.27E-06	1.27E-06	0.00E+00	**9.31E-04**
Pyrene	2.00E-05	1.20E-04	0.00	1.05E-07	1.29E-05	1.29E-05	0.00	7.05E-07	7.05E-07	9.99E-07	9.99E-07	7.01E-07	7.01E-07	3.07E-07	0.00	0.00	5.13E-07	5.13E-07	0.00E+00	**1.52E-04**
Toluene	1.71E-03	1.03E-02	0.00	9.00E-06	1.11E-03	1.11E-03	0.00	6.03E-05	6.03E-05	8.55E-05	8.55E-05	5.99E-05	5.99E-05	2.63E-05	0.00	0.00	7.48E-04	7.48E-04	0.00E+00	**1.44E-02**
Xylenes	1.19E-03	7.15E-03	0.00	6.27E-06	7.71E-04	7.71E-04	0.00	4.20E-05	4.20E-05	5.96E-05	5.96E-05	4.18E-05	4.18E-05	1.83E-05	0.00	0.00	0.00E+00	0.00E+00	0.00E+00	**9.01E-03**
o-Xylene	0.00	0.00	0.00	0.00	0.00	0.00	0.00	0.00	0.00	0.00	0.00	0.00	0.00	0.00	0.00	0.00	1.32E-05	1.32E-05	0.00E+00	**2.63E-05**
Metals																				
Arsenic	6.83E-05	4.10E-04	0.00	1.08E-07	1.33E-05	1.33E-05	0.00	7.23E-06	7.23E-06	1.02E-05	1.02E-05	7.18E-06	7.18E-06	3.15E-06	0.00	0.00	6.43E-05	6.43E-05	5.51E-05	**6.73E-04**
Cadmium	1.53E-04	9.20E-04	0.00	2.42E-07	2.98E-05	2.98E-05	0.00	1.62E-05	1.62E-05	2.30E-05	2.30E-05	1.61E-05	1.61E-05	7.07E-06	0.00	0.00	4.82E-05	4.82E-05	1.37E-04	**1.33E-03**
Chromium	3.67E-05	2.20E-04	0.00	5.79E-08	7.12E-06	7.12E-06	0.00	3.88E-06	3.88E-06	5.50E-06	5.50E-06	3.85E-06	3.85E-06	1.69E-06	0.00	0.00	4.82E-05	4.82E-05	1.13E-04	**4.72E-04**
Lead	4.04E-04	2.43E-03	0.00	6.38E-07	7.85E-05	7.85E-05	0.00	4.28E-05	4.28E-05	6.06E-05	6.06E-05	4.25E-05	4.25E-05	1.86E-05	0.00	0.00	1.45E-04	1.45E-04	2.68E-03	**5.87E-03**
Mercury	8.64E-05	5.19E-04	0.00	1.36E-07	1.68E-05	1.68E-05	0.00	9.15E-06	9.15E-06	1.30E-05	1.30E-05	9.09E-06	9.09E-06	3.99E-06	0.00	0.00	4.82E-05	4.82E-05	7.06E-05	**7.86E-04**
Nickel	4.29E-05	2.58E-04	0.00	6.78E-08	8.34E-06	8.34E-06	0.00	4.54E-06	4.54E-06	6.44E-06	6.44E-06	4.51E-06	4.51E-06	1.98E-06	0.00	0.00	4.82E-05	4.82E-05	9.89E-05	**5.03E-04**
Total HAPs	**0.017**	**0.102**	**0.000**	**0.000**	**0.011**	**0.011**	**0.000**	**0.001**	**0.001**	**0.001**	**0.001**	**0.001**	**0.001**	**0.000**	**0.000**	**0.000**	**0.005**	**0.005**	**0.003**	**0.14**

Emission Factors, Conversions and Assumptions

Conversions

1.340	hp/kW	3600	sec/hour	2	wt. conversion of S to SO2
454	g/lb	2000	lb/ton	264	gal/m^3

Assumptions				Reference
Diesel heat value	133,098	Btu/gal	0.1331 MMBtu/gal	Keiser, Ronald email to Chris Tengco, 01/26/09.
Diesel density	847.9	kg/m^3	7.08 lb/gal	SCANRAFF-Vladimir Ignatjuk Certificate of Quality. 09/19/04.

Diesel Heat Rates							Reference
Caterpillar D399 engines	237.5	g/kW-hr	7,350	Btu/hp-hr	0.0073	MMBtu/hp-hr	Caterpillar D399 SCAC Engine Data Sheet, 05/95
							100% load at 1200RPM value
Caterpillar D343 engines	244.8	g/kW-hr	7,576	Btu/hp-hr	0.0076	MMBtu/hp-hr	Caterpillar D343 Engine Data Sheet, 05/95
							100% load at 2100 RPM value, T Prechamber Engines
Caterpillar C15 engines			26.9	gal/hr	0.0066	MMBtu/hp-hr	Caterpillar C15 Specification Sheet, LEHW7443-000, 2008
Detroit 8V-71N engines			0.415	lb/hp-hr	0.0078	MMBtu/hp-hr	Detroit Diesel, Engine Performance Model: 8V-71N, 10/15/81
John Deere 4024TF270			17.9	lb/hr	0.0070	MMBtu/hp-hr	John Deere Model 4024TF270 Engine Performance, 06/04
Caterpillar 3608 engines	204.7	g/kW-hr	6,335	Btu/hp-hr	0.0063	MMBtu/hp-hr	Caterpillar 3608 Specification Sheet, DM5529, 10/06
ICE engines			7,000	Btu/hp-hr	0.0070	MMBtu/hp-hr	AP42 Table 3.3-1, 10/96

NOx Factors - converted at 133098 Btu/gal

Description	EF		EF		EF		Reference
Discoverer generator engines (Cat/D399)			0.5	g/kW-hr	0.112	lb/MMBtu	D.E.C. Marine AB letter, 10/9/08
Discoverer propulsion engine					3.2	lb/MMBtu	AP42 Table 3.4-1, 10/96
Discoverer emergency generator (Cat/3304)			11.28	g/bhp-hr	3.553	lb/MMBtu	Max of 13 test from EPA/600/8-90/057F
Discoverer MLC Compressors (Cat/C-15)			4.0	g/kW-hr	0.993	lb/MMBtu	Tier 3 emission limit
Discoverer HPU Engines (Detroit/8V71)			9.81	g/bhp-hr	2.771	lb/MMBtu	Max of 4 test from EPA/600/8-90/057F
Discoverer Cranes (Cat/D343)	2810.9	g/hr	1.70E-02	lb/hp-hr	2.241	lb/MMBtu	Caterpillar D343 Engine Data Sheet, 05/95
Discoverer Cementing & Logging 71 series engines			11.72	g/bhp-hr	3.310	lb/MMBtu	Max of 8 test from EPA/600/8-90/057F
Discoverer John Deere Logging Winch			7.5	g/kW-hr	1.768	lb/MMBtu	Tier 2 emission limit
Discoverer boilers			38.5	lb/day	0.201	lb/MMBtu	Clayton Industries, 8/2001
Discoverer Incinerator			5	lb/ton	0.0025	lb/lb	AP42 Table 2.2-1, multiple hearth
Resupply Ship-docked & OSR Work Boat Generators					4.41	lb/MMBtu	AP42 Table 3.3-1, 10/96
Ice Management Fleet factor			25	g/kW-hr	5.876	lb/MMBtu	generic factors consistent w/Ice mgmt fleet ORRs
All Other Incinerators			3	lb/ton	0.0015	lb/lb	AP42 Table 2.1-12, 10/96
Resupply-transit & OSR Main Ship ICE Generators			25.4	g/kW-hr	5.970	lb/MMBtu	EPA Memo, D. Meyer, June 12, 2008
OSR Main Ship ICE Propulsion (Cat/3608)			13.62	g/kW-hr	3.536	lb/MMBtu	Caterpillar 3608 Specification Sheet, DM5529, 10/06
OSR Work Boat ICE Propulsion Engines			4.644	g/hp-hr	1.463	lb/MMBtu	Cummins Engine Model: QSB5.9-305 MCD Spec Sheet, 10/06

PM Factors

Description	EF		EF		EF		Reference
PM_{10}							
Discoverer generator engines (Cat/D399)	251.2	g/hr	4.18E-04	lb/hp-hr	0.057	lb/MMBtu	Caterpillar D399 SCAC Engine Data Sheet, 05/95
Discoverer propulsion engine					0.0573	lb/MMBtu	AP42 Table 3.4-2, 10/96
Discoverer emergency generator (Cat/3304)			2.21	g/bhp-hr	0.696	lb/MMBtu	Max of 13 test from EPA/600/8-90/057F
Discoverer MLC Compressors (Cat/C-15)			0.2	g/kW-hr	0.050	lb/MMBtu	Tier 3 emission limit
Discoverer HPU Engines (Detroit/8V71)			1.26	g/bhp-hr	0.356	lb/MMBtu	Max of 4 test from EPA/600/8-90/057F
Discoverer Cranes (Cat/D343)	129.8	g/hr	7.84E-04	lb/hp-hr	0.103	lb/MMBtu	Caterpillar D343 Engine Data Sheet, 05/95
Discoverer Cementing & Logging 71 series engines			1.92	g/bhp-hr	0.542	lb/MMBtu	Max of 8 test from EPA/600/8-90/057F
Discoverer John Deere Logging Winch			0.6	g/kW-hr	0.141	lb/MMBtu	Tier 2 emission limit
Discoverer boilers			4.5	lb/day	0.024	lb/MMBtu	Clayton Industries, 8/2001
Discoverer Incinerator			8.2	lb/ton	0.0041	lb/lb	ORR
Resupply Ship-docked & OSR Work Boat Generators					0.31	lb/MMBtu	AP42 Table 3.3-1, 10/96
Ice Management ICE Engines			1.06	g/kW-hr	0.249	lb/MMBtu	generic factors consistent w/Ice mgmt fleet ORRs
Ice Management & OSR Incinerators			13.3	lb/ton	0.0067	lb/lb	AP42 Table 2.1-12, 10/96 & Appendix B.1 2.1
Resupply-transit & OSR Main Ship ICE Generators			1.92	g/kW-hr	0.451	lb/MMBtu	Corbett, Koehler. Revised: 05/03
OSR Main Ship ICE Propulsion (Cat/3608)			0.17	g/kW-hr	0.044	lb/MMBtu	Caterpillar 3608 Specification Sheet, DM5529, 10/06
OSR Work Boat ICE Propulsion Engines			0.077	g/hp-hr	0.024	lb/MMBtu	Cummins Engine Model: QSB5.9-305 MCD Spec Sheet, 10/06

$PM_{2.5}$

All emissions units 100% PM_{10} except the following:

Discoverer Incinerator	7	lb/ton	0.0035	lb/lb	ORR
Ice Management ICE Engines			0.22	lb/MMBtu	generic factors consistent w/Ice mgmt fleet ORRs
Ice Management & OSR Incinerators	9.1	lb/ton	0.0046	lb/lb	AP42 Table 2.1-12, 10/96 & Appendix B.1 2.1
Resupply-transit & OSR Main Ship ICE Generators	1.54	g/kW-hr	0.362	lb/MMBtu	EPA Ref: IVL

Air Sciences Inc.	PROJECT TITLE: Shell Offshore, Inc.	BY: S. Pryor	
ENGINEERING CALCULATIONS	PROJECT NO: 180-15-1	PAGE: 20	OF: 21
	SUBJECT: Discoverer Emissions-AK OCS	DATE: September 17, 2009	

SO_2 Factors- (Diesel Fuel)	S content	EF		EF		Reference
Discoverer & OSR Main Ship	0.0015% by wt.	0.00003	lb/lb fuel	0.0016	lb/MMBtu	Calculation
Resupply-Docked, OSR Work Boats	0.19% by wt.	0.0038	lb/lb fuel	0.2020	lb/MMBtu	Calculation
Ice Mnge. ICE, Resupply-Transit	0.19% by wt.	8.09E-03 S	lb/hp-hr	0.2196	lb/MMBtu	AP42 Table 3.4-1, 10/96
Discoverer Incinerator		2.5	lb/ton	0.0013	lb/lb	ORR
All Other Incinerators		2.5	lb/ton	0.0013	lb/lb	AP42 Table 2.1-12, 10/96

CO Factors	EF	EF		EF		Reference
Discoverer generator engines (Cat/D399)	882.7 g/hr	1.47E-03	lb/hp-hr	0.200	lb/MMBtu	Caterpillar D399 SCAC Engine Data Sheet, 05/95
Disco Prop., Ice Mngt ICE, Resupply-transit, OSR Main Gen.		5.50E-03	lb/hp-hr	0.786	lb/MMBtu	AP42 Table 3.4-1, 10/96
Discoverer emergency generator (Cat/3304)		6.2	g/bhp-hr	1.953	lb/MMBtu	Max of 13 test from EPA/600/8-90/057F
Discoverer MLC Compressors (Cat/C-15)		3.5	g/kW-hr	0.868	lb/MMBtu	Tier 3 emission limit
Discoverer HPU Engines (Detroit/8V71)		2.99	g/bhp-hr	0.844	lb/MMBtu	Max of 2 test from EPA/600/8-90/057F
Discoverer Cranes (Cat/D343)	593.6 g/hr	3.59E-03	lb/hp-hr	0.473	lb/MMBtu	Caterpillar D343 Engine Data Sheet, 05/95
Discoverer Cementing & Logging 71 series engines		6.55	g/bhp-hr	1.850	lb/MMBtu	Max of 6 test from EPA/600/8-90/057F
Discoverer John Deere Logging Winch		5.5	g/kW-hr	1.296	lb/MMBtu	Tier 2 emission limit
Discoverer boilers		14.8	lb/day	0.077	lb/MMBtu	Clayton Industries, 8/2001
Discoverer Incinerator		31	lb/ton	0.0155	lb/lb	AP42 Table 2.2-1, multiple hearth
All Other Incinerators		300	lb/ton	0.1500	lb/lb	AP42 Table 2.1-12, 10/96
Resupply Ship-docked & OSR Work Boat Generators				0.95	lb/MMBtu	AP42 Table 3.3-1, 10/96
OSR Main Ship ICE Propulsion (Cat/3608)		0.73	g/kW-hr	0.190	lb/MMBtu	Caterpillar 3608 Specification Sheet, DM5529, 10/06
OSR Work Boat ICE Propulsion Engines		0.155	g/hp-hr	0.049	lb/MMBtu	Cummins Engine Model: QSB5.9-305 MCD Spec Sheet, 10/06

VOC Factors	EF		EF		Reference
Discoverer generator engines (Cat/D399)	75.5	g/hr	0.017	lb/MMBtu	Caterpillar D399 SCAC Engine Data Sheet, 05/95
Discoverer propulsion engine			0.09	lb/MMBtu	AP42 Table 3.4-1, 10/96
Discoverer emergency generator (Cat/3304)	1.2	g/bhp-hr	0.366	lb/MMBtu	Max of 13 test from EPA/600/8-90/057F
Discoverer MLC Compressors (Cat/C-15)	4.0	g/kW-hr	0.993	lb/MMBtu	Tier 3 emission limit
Discoverer HPU Engines (Detroit/8V71)	1.5	g/bhp-hr	0.418	lb/MMBtu	Max of 2 test from EPA/600/8-90/057F
Discoverer Cranes (Cat/D343)	172.6	g/hr	0.138	lb/MMBtu	Caterpillar D343 Engine Data Sheet, 05/95
Discoverer Cementing & Logging 71 series engines	2.01	g/bhp-hr	0.568	lb/MMBtu	Max of 6 test from EPA/600/8-90/057F
Discoverer John Deere Logging Winch	7.5	g/kW-hr	1.768	lb/MMBtu	Tier 2 emission limit
Discoverer boilers	0.27	lb/day	0.001	lb/MMBtu	Clayton Industries, 8/2001
Discoverer Incinerator	3	lb/ton	0.0015	lb/lb	AP42 Table 2.1-12, 10/96
Ice Mngt ICE, Resupply-transit & OSR Main Gen.	0.6	g/kW-hr	0.141	lb/MMBtu	Corbett, Koehler. Revised: 05/03
All Other Incinerators	100	lb/ton	0.0500	lb/lb	AP42 Table 2.1-12, 10/96
Resupply Ship-docked & OSR Work Boat Generators			0.35	lb/MMBtu	AP42 Table 3.3-1, 10/96
OSR Main Ship ICE Propulsion (Cat/3608)	0.99	g/kW-hr	0.257	lb/MMBtu	Caterpillar 3608 Specification Sheet, DM5529, 10/06
OSR Work Boat ICE Propulsion Engines	0.078	g/hp-hr	0.025	lb/MMBtu	Cummins Engine Model: QSB5.9-305 MCD Spec Sheet, 10/06

Yearly Table Page 17 Notes

1 Units FD-1-6 (Generator Engines) instantaneous capacity restriction, SCR NOx control effectiveness and Oxidation Catalyst reduction efficiencies applied
2 Not used during drilling
3 Unit FD-8 (Emergency Generator) operation assumed for 120 min/week
4 Units FD-9-11 (MLC Compressors) operational restriction applied
5 CDPF PM & CO reduction efficiencies applied
6 Units FD-12 & FD-13 (HPU Engines) operational restriction applied
7 Units FD-14 & 15 (Cranes) operating restriction applied
8 Units FD-16, 17 & 18 (Cementing units) operating capacity restriction applied
9 Units FD-19 & 20 (Logging Winches) cannot operate simultaneously with cementing units, emissions combined with cementing units. 0%
10 Resupply Ship-docked maximum use 12 hr/day , 8 days/yr
11 ICE Engine NOx emissions are calculated at 38% of 168 days/yr, Remaining are calculated at 100% of 168 days/yr
12 #REF!
13 Resupply Ship-transit maximum use 8 trips/yr , 4 hr/trip
14 OSR Main Ship Propulsion and Generator Engines restriction applied

HAPs Emission Factors -(from AP42)

ICE Engines Emission Factors

AP42 Table 3.3-2, Speciated Organic Compound Emission Factors For Uncontrolled Diesel Engines

Pollutant	EF lb/MMBtu
Acaldehyde	7.67E-04
Acenaphthene	1.42E-06
Acenaphthylene	5.06E-06
Acrolein	9.25E-05
Anthracene	1.87E-06
Benzene	9.33E-04
Benzo(a)anthracene	1.68E-06
Benzo(a)pyrene	1.88E-07
Benzo(b)fluoranthene	9.91E-08
Benzo(g,h,I)perylene	4.89E-07
Benzo(k)fluoranthene	1.55E-07
1,3-Butadiene	3.91E-05
Chrysene	3.53E-07
Dibenz(a,h)anthracene	5.83E-07
Fluoranthene	7.61E-06
Fluorene	2.92E-05
Formaldehyde	1.18E-03
Indeno(1,2,3-cd)pyrene	3.75E-07
Naphthalene	8.48E-05
Phenanthrene	2.94E-05
Pyrene	4.78E-06
Toluene	4.09E-04
Xylenes	2.85E-04

Boiler Emission Factors

AP42 Table 1.3-9, Emission Factors For Speciated Organic Compounds From Fuel Oil Combustion

Pollutant	EF lb/10^3 gal	EF lb/MMBtu
Acenaphthene	2.11E-05	1.59E-07
Acenaphthylene	2.53E-07	1.90E-09
Anthracene	1.22E-06	9.17E-09
Benzene	2.14E-04	1.61E-06
Benz(a)anthracene	4.01E-06	3.01E-08
Benzo(b,k)fluoranthene	1.48E-06	1.11E-08
Benzo(g,h,i)perylene	2.26E-06	1.70E-08
Chrysene	2.38E-06	1.79E-08
Dibenzo(a,h)anthracene	1.67E-06	1.25E-08
Ethylbenzene	6.36E-05	4.78E-07
Fluoranthene	4.84E-06	3.64E-08
Fluorene	4.47E-06	3.36E-08
Formaldehyde	3.30E-02	2.48E-04
Indo(1,2,3-cd)pyrene	2.14E-06	1.61E-08
Naphthalene	1.13E-03	8.49E-06
Phenanthrene	1.05E-05	7.89E-08
Pyrene	4.25E-06	3.19E-08
Toluene	6.20E-03	4.66E-05
o-Xylene	1.09E-04	8.19E-07

Incinerator Emission Factors

Metal			lb/MMBtu
Arsenic	As		4.90E-06
Cadmium	Cd	11 lb/10^{12} Btu	1.10E-05
Chromium	Cr	0.35 lb/10^6 gal	2.63E-06
Lead	Pb		2.9E-05
Mercury	Hg	6.2 lb/10^{12} Btu	6.20E-06
Nickel	Ni	0.41 lb/10^6 gal	3.08E-06
Total HAPs			3.93E-03

Table 1.3-10. Emission Factors For Trace Elements From Distillate Fuel Oil Combustion Sources

Metal		EF lb/10^{12} Btu	EF lb/MMBtu
Arsenic	As	4	4.00E-06
Cadmium	Cd	3	3.00E-06
Chromium	Cr	3	3.00E-06
Lead	Pb	9	9.00E-06
Mercury	Hg	3	3.00E-06
Nickel	Ni	3	3.00E-06
Total HAPs			3.31E-04

Table 2.2-2 - Metals Emission Factors for Mass Burn and Modular Excess Air Combustors

Metal		lb/ton	lb/lb
Arsenic	As	4.37E-03	2.19E-06
Cadmium	Cd	1.09E-02	5.45E-06
Chromium	Cr	8.97E-03	4.49E-06
Lead	Pb	2.13E-01	1.07E-04
Mercury	Hg	5.60E-03	2.80E-06
Nickel	Ni	7.85E-03	3.93E-06
Total HAPs		2.51E-01	1.25E-04

ICE Metal References

Arsenic	L & E Air Emissions from Sources of Arsenic and Arsenic Compounds, EPA-454/R-98-013, June 1998, Table 4-20, Distillate Oil Fired Turbine
Cadmium	L & E Air Emissions from Sources of Cadmium and Cadmium Compounds, EPA-454/R-93-040, Sept. 1993, Table 6-12, No. 2 Distillate Oil
Chromium	L & E Air Emissions from Sources of Chromium, EPA-450/4-84-007g, July 1984, Table 36, Distillate #2
Lead	L & E Air Emissions from Sources of Lead and Lead Compounds, EPA 454/R-98-006, May 1998, Section 5.2.2, Distillate oil-fired gas turbines
Mercury	L & E Air Emissions from Sources of Mercury and Mercury Compounds, EPA-454/R-97-012, Dec. 1997, Table 6-12, Distillate No. 2
Nickel	L & E Air Emissions from Sources of Nickel, EPA-450/4-84-007f, March 1984, Table 26, Distillate #2

Air Sciences Inc.	PROJECT TITLE: Shell Offshore, Inc.	BY: S. Pryor	
ENGINEERING CALCULATIONS	PROJECT NO: 180-15-1	PAGE: 1	OF: 3
	SUBJECT: Fleet	DATE: September 17, 2009	

Generic Ice Breaker

Propulsion Engines	80%
Remaining Sources	100%

Unit ID	Description	Make/Model	Rating	Capacity	Fuel consumpt. (MMBtu/hr)	Fuel Use (gal/hr)
	Propulsion		28,400 hp	80%	159.040	1,194.9
	Generator		2800 hp	100%	19.600	147.3
	Heat Boiler		10 MMBtu/hr	100%	10.000	75.1
	Incinerator		154 lb/hr	100%		
					188.640	1417.3

Jim Kilabuk (Resupply Ship - docked)

Unit ID	Description	Make/Model	Rating	Capacity	Hourly Fuel consumpt. (MMBtu/hr)	Daily & Annual Capacity	Daily & Annual Fuel consumpt. (MMBtu/hr)
JK-1	Main Propulsion	EMD / V20 645	3,600 hp	0%	0.000	0%	0.000
JK-2	Main Propulsion	EMD / V20 645	3,600 hp	0%	0.000	0%	0.000
JK-3	Generator	Cat / D3406	292 hp	100%	2.044	100%	2.044
JK-4	Generator	Cat / D3406	292 hp	100%	2.044	0%	0.000
JK-5	HPU Engine	Cat / D343	300 hp	0%	0.000	0%	0.000
JK-6	Bow Thruster	Cat / D343	300 hp	0%	0.000	0%	0.000
	Jim Kilabuk total				4.088		2.044
Resupply Ship - docked					4.088		2.044

Jim Kilabuk (Resupply Ship-in Transit)

JK-1	Main Propulsion	EMD / V20 645	3,600 hp	80%	20.160
JK-2	Main Propulsion	EMD / V20 645	3,600 hp	80%	20.160
JK-3	Generator	Cat / D3406	292 hp	100%	2.044
JK-4	Generator	Cat / D3406	292 hp	100%	2.044
JK-5	HPU Engine	Cat / D343	300 hp	0%	0.000
JK-6	Bow Thruster	Cat / D343	300 hp	0%	0.000
	Jim Kilabuk total				44.408
Resupply Ship - in Transit					44.408

Air Sciences Inc.	PROJECT TITLE: Shell Offshore, Inc.	BY: S. Pryor
ENGINEERING CALCULATIONS	PROJECT NO: 180-15-1	PAGE: 2 OF: 3
	SUBJECT: Fleet	DATE: September 17, 2009

Anchor Handlers Propulsion Engines 80% Remaining Sources 100%

Tor Viking II — Maximum Emissions (lb/hr)

Unit ID	Description	Make/Model	Rating		Capacity	Fuel consumpt. (MMBtu/hr)	Fuel Use (gal/hr)	PM_{10}	$PM_{2.5}$	NO_x	SO_2	CO	VOC
TV-1	Main Prop	MaK 8M32	5,046	hp	80%	28.26	212.3	1.62	1.62	23.57	6.20	22.20	2.54
TV-2	Main Prop	MaK 8M32	5,046	hp	80%	28.26	212.3	1.62	1.62	23.57	6.20	22.20	2.54
TV-3	Main Prop	MaK 6M32	3,784	hp	80%	21.19	159.2	1.21	1.21	17.67	4.65	16.65	1.91
TV-4	Main Prop	MaK 6M32	3,784	hp	80%	21.19	159.2	1.21	1.21	17.67	4.65	16.65	1.91
TV-5	Harbor Generator	Caterpillar 3412	1,168	hp	100%	8.18	61.4	0.47	0.47	4.36	1.80	6.42	0.74
TV-6	Harbor Generator	Caterpillar 3412	1,168	hp	100%	8.18	61.4	0.47	0.47	4.36	1.80	6.42	0.74
TV-7	Heat Boiler		1.37	MMBtu/hr	100%	1.37	10.3	0.03	0.03	0.21	0.31	0.05	0.00
	Incinerator	TeamTec/OGS200CSW	151	lb/hr [1]				1.01	0.69	0.38	0.19	22.68	7.56
	TV total					116.62	876.2	7.64	7.33	91.78	25.80	113.29	17.94

168 days/yr 4032 hr/yr ICE Engines- NOx Only 38% 1532.16 hr/yr

Tor Viking II — Maximum Emissions (ton/yr)

Unit ID	Description	Make/Model	Rating		Capacity	Fuel consumpt. (MMBtu/yr)	Fuel Use (gal/yr)	PM_{10}	$PM_{2.5}$	NO_x	SO_2	CO	VOC
TV-1	Main Prop	MaK 8M32	5,046	hp	80%	113,935	856,021	3.26	3.26	18.05	12.51	44.76	5.13
TV-2	Main Prop	MaK 8M32	5,046	hp	80%	113,935	856,021	3.26	3.26	18.05	12.51	44.76	5.13
TV-3	Main Prop	MaK 6M32	3,784	hp	80%	85,440	641,931	2.45	2.45	13.54	9.38	33.57	3.84
TV-4	Main Prop	MaK 6M32	3,784	hp	80%	85,440	641,931	2.45	2.45	13.54	9.38	33.57	3.84
TV-5	Harbor Generator	Caterpillar 3412	1,168	hp	100%	32,966	247,679	0.94	0.94	3.34	3.62	12.95	1.48
TV-6	Harbor Generator	Caterpillar 3412	1,168	hp	100%	32,966	247,679	0.94	0.94	3.34	3.62	12.95	1.48
TV-7	Heat Boiler		1.37	MMBtu/hr	100%	5,524	41,502	0.07	0.07	0.42	0.62	0.10	0.00
	Incinerator	TeamTec/OGS200CSW	151	lb/hr [1]				2.03	1.39	0.76	0.38	45.73	15.24
	TV total					470,204	3,532,764	15.41	14.77	71.04	52.02	228.39	36.16

Hull 247 — Maximum Emissions (lb/hr)

Hull 247		Rating		Capacity	Fuel consumpt. (MMBtu/hr)	Fuel Use (gal/hr)	PM_{10}	$PM_{2.5}$	NO_x	SO_2	CO	VOC
Maximum power generation		24	MWe	80%	180.16	1,353.6	10.59	10.59	76.22	39.56	148.20	17.02
Heat Boiler		4	MMBtu/hr	100%	4.00	30.1	0.10	0.10	0.72	0.90	0.15	0.01
Incinerator	TeamTec/OGS200CSW	151	lb/hr [1]				1.01	0.69	0.38	0.19	22.68	7.56
Hull total					184.16	1,383.6	11.69	11.37	77.32	40.65	171.04	24.59

168 days/yr 4032 hr/yr ICE Engines- NOx Only 38% 1532.16 hr/yr

Hull 247 — Maximum Emissions (ton/yr)

Hull 247		Rating		Capacity	Fuel consumpt. (MMBtu/yr)	Fuel Use (gal/yr)	PM_{10}	$PM_{2.5}$	NO_x	SO_2	CO	VOC
Maximum power generation		24	MWe	80%	726,409	5,457,699	21.34	21.34	58.39	79.75	298.78	34.32
Heat Boiler		4	MMBtu/hr	100%	16,128.00	121,173.9	0.20	0.20	1.45	1.81	0.30	0.01
Incinerator	TeamTec/OGS200CSW	151	lb/hr				2.03	1.39	0.76	0.38	45.73	15.24
Hull total					742,537	5,578,873	23.57	22.93	60.61	81.94	344.82	49.57
Maximum (lb/hr) from Anchor Handler					184.16	1,383.65	11.69	11.37	91.78	40.65	171.04	24.59

[1] Ratioed from Discoverer incinerator

TeamTec/GS500C			TeamTec/OGS200CSW		
850	kW		465	kW	
730000	kcal/hr		400000	kcal/hr	
276	lb/hr		151.23	lb/hr	

Assumptions			Reference
Diesel heat value	133,098 Btu/gal	0.133098 MMBtu/gal	Keiser, Ronald email to Chris Tengco, 01/26/09.
ICE engines	7,000 Btu/hp-hr	0.0070 MMBtu/hp-hr	AP42 Table 3.3-1, 10/96

Conversions			
1,340.483	hp/MW	454	g/lb
1.340	hp/kW	2000	lb/ton

PM Factors		EF		EF		Reference
PM_{10}						
Engines >600 hp				0.0573	lb/MMBtu	AP42 Table 3.4-2, 10/96
Engines >750 hp		0.25	g/kW-hr	0.059	lb/MMBtu	Tier 4 emission limit
Boilers < 100 MMBtu/hr, Distillate Oil	Filterable PM	2	lb/10^3 gal	0.015	lb/MMBtu	AP42 Table 1.3-1, 9/98
	Condensable PM	1.3	lb/10^3 gal	0.010	lb/MMBtu	AP42 Table 1.3-2, 9/98
	Total PM	3.3	lb/10^3 gal	0.025	lb/MMBtu	
Incinerator		13.3	lb/ton	0.007	lb/lb	AP42 Table 2.1-12, 10/96 & Appendix B.1 2.1
$PM_{2.5}$						
All emissions units		100%	PM_{10}			
Incinerator		9.1	lb/ton	0.0046	lb/lb	AP42 Table 2.1-12, 10/96 & Appendix B.1 2.1

NOx Factors		EF		EF		Reference
TV prop generators		0.111	lb NO_X / gal	0.834	lb/MMBtu	Permit R100CS-AK-07-01, controlled
TV harbor generator		0.071	lb NO_X / gal	0.533	lb/MMBtu	Permit R100CS-AK-07-01, controlled
TV boiler		0.02	lb NO_X / gal	0.150	lb/MMBtu	Permit R100CS-AK-07-01
Hull 247	SCR	1.8	g/kW-hr	0.423	lb/MMBtu	SCR Control
Boilers < 100 MMBtu/hr, Distillate Oil		24	lb/10^3 gal	0.180	lb/MMBtu	AP42 Table 1.3-1, 9/98
Incinerator		5	lb/ton	0.0025	lb/lb	AP42 Table 2.2-1, multiple hearth

SO_2 Factor			EF		EF	Reference
Engines >600 hp	0.19%	by wt.	8.09E-03 S	lb/hp-hr	0.220	lb/MMBtu	AP42 Table 3.4-1, 10/96
Boilers < 100 MMBtu/hr, Distillate Oil	0.19%	by wt.	157 S	lb/10^3 gal	0.224	lb/MMBtu	AP42 Table 1.3-1, 9/98
Incinerator			2.5	lb/ton	0.0013	lb/lb	AP42 Table 2.1-12, 10/96

CO Factor	EF		EF		Reference
Engines >600 hp	5.50E-03	lb/hp-hr	0.786	lb/MMBtu	AP42 Table 3.4-1, 10/96
Engines >750 hp	3.5	g/kW-hr	0.823	lb/MMBtu	Tier 2 emission limit
Boilers < 100 MMBtu/hr, Distillate Oil	5	lb/10^3 gal	0.038	lb/MMBtu	AP42 Table 1.3-1, 9/98
Incinerator	300	lb/ton	0.1500	lb/lb	AP42 Table 2.1-12, 10/96

VOC Factor	EF		EF		Reference
Engines >600 hp			0.09	lb/MMBtu	AP42 Table 3.4-1, 10/96
Engines >750 hp	0.3	g/hp-hr	0.094	lb/MMBtu	Tier 4 emission limit
Industrial boilers, Distillate oil fired	0.2	lb/10^3 gal	0.002	lb/MMBtu	AP42 Table 1.3-3, 9/98
Incinerator	100	lb/ton	0.0500	lb/lb	AP42 Table 2.1-12, 10/96

Air Sciences Inc.	PROJECT TITLE: Shell Offshore, Inc.	BY: S. Pryor	
	PROJECT NO: 180-15-1	PAGE: 3	OF: 3
ENGINEERING CALCULATIONS	SUBJECT: Fleet	DATE: September 17, 2009	

Oil Spill Response Fleet

Nanuq (Main Oil Spill Response Vessel)		**34-foot Oil Spill Response Work Boats**	
Propulsion Engines	100%	Propulsion	100%
Electrical Generators	100%	Generator	100%
Remaining Prop & Generators	0%		
Incinerator	100%		

Unit ID	Description	Make/Model	Rating	Capacity	Fuel consumpt. (MMBtu/hr)	Fuel Use (gal/hr)
Nanuq (Main Oil Spill Response Vessel)						
N-1	Propulsion Engine	Cat/3608	2,710 kW	100%	23.004	172.8
N-2	Propulsion Engine	Cat/3608	2,710 kW	100%	23.004	172.8
N-3	Electrical Generator	Cat/3508	1,285 hp	100%	8.995	67.6
N-4	Electrical Generator	Cat/3508	1,285 hp	100%	8.995	67.6
N-5	Emergency Gen	John Deere	166 kW	0%	0.000	0.0
N-6	Incinerator	ASC / CP100	125 lb/hr	100%		
	Nanuq total				63.998	480.832
	Main Ship Propulsion Engines		5,420 kW	100%	46.008	345.668
	Main Ship Generators		2,570 hp	100%	17.990	135.164
					63.998	480.832
Kvichak No. 1 34-foot Oil Spill Response Work Boat						
OSRK1-1	Propulsion		300 hp	100%	2.100	
OSRK1-2	Propulsion		300 hp	100%	2.100	
OSRK1-3	Generator		12 hp	100%	0.084	
Kvichak No. 2 34-foot Oil Spill Response Work Boat						
OSRK2-1	Propulsion		300 hp	100%	2.100	
OSRK2-2	Propulsion		300 hp	100%	2.100	
OSRK2-3	Generator		12 hp	100%	0.084	
Kvichak No. 3 34-foot Oil Spill Response Work Boat						
OSRK3-1	Propulsion		300 hp	100%	2.100	
OSRK3-2	Propulsion		300 hp	100%	2.100	
OSRK3-3	Generator		12 hp	100%	0.084	
	3 34-foot OSR Work Boats total				12.852	
OSR fleet total					76.850	
	Work Boat Propulsion Engines		1800 hp		12.600	
	Work Boat Generators		36 hp		0.252	
					12.852	

Air Sciences Inc.	PROJECT TITLE: Shell Offshore, Inc.	BY: S. Pryor	
	PROJECT NO: 180-15-1	PAGE: 2	OF: 18
ENGINEERING CALCULATIONS	SUBJECT: Discoverer Emissions-AK OCS	DATE: September 17, 2009	

Emissions Unit: FD-8 Em Generator **Make/Model:** Caterpillar / 3304 **Rating:** 131 hp

Emissions Factors, lb/MMBtu

PM_{10}	$PM_{2.5}$	NO_x	SO_2	CO	VOC	Lead
0.696	0.696	3.553	0.0016	1.953	0.366	2.9E-05

Control Efficiency

PM_{10}	$PM_{2.5}$	NO_x	SO_2 [1]	CO	VOC	Lead
0%	0%	0%	0%	0%	0%	0%

Rated fuel consumpt. MMBtu/hr	Max Actual fuel consumpt. MMBtu/hr	Hourly Emission Rate, lb/hr PM_{10}	$PM_{2.5}$	NO_x	SO_2	CO	VOC	Lead
0.9	0.9	0.64	0.64	3.26	1.46E-03	1.79	0.34	2.66E-05

ORR days/yr	Use min/wk	Max Actual fuel consumpt. MMBtu/yr	Annual Emission Rate, ton/yr PM_{10}	$PM_{2.5}$	NO_x	SO_2	CO	VOC	Lead
168	120	44	1.53E-02	1.53E-02	7.82E-02	3.51E-05	4.30E-02	8.06E-03	6.38E-07

Operational Restrictions

Unit FD-8 (Emergency Generator) operation assumed for

[1] Sulfur content on all stationary source engines on Discovere 0.0015% by wt.

Emissions Factor References

PM_{10}	Max of 13 test from EPA/600/8-90/057F
$PM_{2.5}$	100% PM_{10}
NO_x	Max of 13 test from EPA/600/8-90/057F
SO_2	Sulfur Content Calculation
CO	Max of 13 test from EPA/600/8-90/057F
VOC	Max of 13 test from EPA/600/8-90/057F
Lead	L & E Air Emissions from Sources of Lead and Lead Compounds, EPA 454/R-98-006, May 1998, Section 5.2.2, Distillate oil-fired gas turbines

Assumptions	References	Conversions
Diesel heat value	Keiser, Ronald email to Chris Tengco, 01/26/09.	1.340 hp/kW
133,098 Btu/gal		454 g/lb
0.1331 MMBtu/gal		3,600 sec/hour
Diesel density	SCANRAFF-Vladimir Ignatjuk Certificate of Quality. 09/19/04.	2,000 lb/ton
847.9 kg/m^3		2 wt. conversion of S to SO2
7.08 lb/gal		264 gal/m^3
ICE Engines diesel heat rate	AP42 Table 3.3-1, 10/96	
7,000 Btu/hp-hr		
0.007 MMBtu/hp-hr		

Air Sciences Inc.	PROJECT TITLE: Shell Offshore, Inc.	BY: S. Pryor	
	PROJECT NO: 180-15-1	PAGE: 6	OF: 18
ENGINEERING CALCULATIONS	SUBJECT: Discoverer Emissions-AK OCS	DATE: September 17, 2009	

Emissions Unit: FD-16-17 Cementing Unit **Make/Model:** Detroit / 8V-71N **Rating:** 335 hp

Emissions Factors, lb/MMBtu

PM_{10}	$PM_{2.5}$	NO_x	SO_2	CO	VOC	Lead
0.542	0.542	3.310	0.0016	1.850	0.568	2.9E-05

Control Efficiency

PM_{10}	$PM_{2.5}$	NO_x	SO_2 [1]	CO	VOC	Lead
85%	85%	0%	0%	90%	90%	0%

Rated fuel consumpt. MMBtu/hr	Hourly Emission Rate, lb/hr PM_{10}	$PM_{2.5}$	NO_x	SO_2	CO	VOC	Lead
2.6	0.21	0.21	8.66	4.17E-03	0.48	0.15	7.58E-05

Capacity ORR	ORR days/yr	Max Actual fuel consumpt. MMBtu/yr	Annual Emission Rate, ton/yr PM_{10}	$PM_{2.5}$	NO_x	SO_2	CO	VOC	Lead
28%	168	2,931	0.12	0.12	4.85	2.34E-03	0.27	0.08	4.25E-05

Operational Restrictions

Cementing (three units) & Logging (two units) combined maximum 28% per day (of Cementing)

[1] Sulfur content on all stationary source engines on Discoverer & N 0.0015% by wt.

Control Device Effectiveness		References
Discoverer small engines (other than Tier 3 engines) and Nanuq propulsion and generation Catalytic Diesel Particulate Filter (CDPF) CO, VOC, HAPs, reduction efficiency	90%	CleanAIR CDPF guarantee
Discoverer small engines (other than Tier 3 engines) and Nanuq propulsion and genera	85%	California Air Resource Board Currently verified, January 2009, CleanAIR Systems PERMIT
CCV on Crankcase vent	100%	Crankcase emissions redirected to intake

Emissions Factor References

PM_{10}	Max of 8 test from EPA/600/8-90/057F
$PM_{2.5}$	100% PM_{10}
NO_x	Max of 8 test from EPA/600/8-90/057F
SO_2	Sulfur Content Calculation
CO	Max of 6 test from EPA/600/8-90/057F
VOC	Max of 6 test from EPA/600/8-90/057F
Lead	L & E Air Emissions from Sources of Lead and Lead Compounds, EPA 454/R-98-006, May 1998, Section 5.2.2, Distillate oil-fired gas turbines

BACT Emission Limits and Test Methods

PM_{10}	Control Method:	CDPF	Control Efficiency:	85%		
	Uncontrolled emission rate:	1.92 g/bhp-hr	2.573 g/kW-hr	Ref:	Max of 8 test from EPA/600/8-90/057F	
	Proposed BACT emission rate:	0.288 g/bhp-hr	0.386 g/kW-hr			
	Proposed emission test methods:	EPA methods 1-4 & 5, at engine load >50%		Interval:	triplicate consecutive 1-hour tests.	
NO_x	Control Method:	GCP & integral design	Control Efficiency:	N/A		
	Uncontrolled & Controlled emission rate:	11.72 g/bhp-hr	15.705 g/kW-hr	Ref:	Max of 8 test from EPA/600/8-90/057F	
	Proposed emission test methods:	EPA methods 1-4 & 7E, at engine load >50%		Interval:	triplicate consecutive 1-hour tests.	
CO	Control Method:	CDPF	Control Efficiency:	90%		
	Uncontrolled emission rate:	6.55 g/bhp-hr	8.777 g/kW-hr	Ref:	Max of 6 test from EPA/600/8-90/057F	
	Proposed BACT emission rate:	0.655 g/bhp-hr	0.878 g/kW-hr			
	Proposed emission test methods:	EPA methods 1-4 & 10, at engine load >50%		Interval:	triplicate consecutive 1-hour tests.	

Assumptions	References	Conversions
Diesel heat value	Keiser, Ronald email to Chris Tengco, 01/26/09.	1.340 hp/kW
133,098 Btu/gal		454 g/lb
0.1331 MMBtu/gal		3,600 sec/hour
Diesel density	SCANRAFF-Vladimir Ignatjuk Certificate of Quality. 09/19/04.	2,000 lb/ton
847.9 kg/m^3		2 wt. conversion of S to SO2
7.08 lb/gal		264 gal/m^3
Detroit 8V-71N engines diesel heat rate	Detroit Diesel, Engine Performance Model: 8V-71N, 10/15/81	
0.415 lb/hp-hr		
0.0078 MMBtu/hp-hr		

Air Sciences Inc.	PROJECT TITLE: Shell Offshore, Inc.	BY: S. Pryor	
	PROJECT NO: 180-15-1	PAGE: 7	OF: 18
ENGINEERING CALCULATIONS	SUBJECT: Discoverer Emissions-AK OCS	DATE: September 17, 2009	

Emissions Unit: FD-18 Cementing Unit **Make/Model:** GM 3-71 **Rating:** 147 hp

Emissions Factors, lb/MMBtu

PM_{10}	$PM_{2.5}$	NO_x	SO_2	CO	VOC	Lead
0.542	0.542	3.310	0.0016	1.850	0.568	2.9E-05

Control Efficiency

PM_{10}	$PM_{2.5}$	NO_x	SO_2 [1]	CO	VOC	Lead
85%	85%	0%	0%	90%	90%	0%

Rated fuel consumpt. MMBtu/hr	Hourly Emission Rate, lb/hr PM_{10}	$PM_{2.5}$	NO_x	SO_2	CO	VOC	Lead
1.1	0.09	0.09	3.80	1.83E-03	0.21	0.07	3.33E-05

Capacity ORR	ORR days/yr	Max Actual fuel consumpt. MMBtu/yr	Annual Emission Rate, ton/yr PM_{10}	$PM_{2.5}$	NO_x	SO_2	CO	VOC	Lead
28%	168	1,286	0.05	0.05	2.13	1.03E-03	0.12	0.04	1.86E-05

Operational Restrictions

Cementing (three units) & Logging (two units) combined maximum 28% per day (of Cementing)

[1] Sulfur content on all stationary source engines on Discoverer & N 0.0015% by wt.

Control Device Effectiveness		References
Discoverer small engines (other than Tier 3 engines) and Nanuq propulsion and generation Catalytic Diesel Particulate Filter (CDPF) CO, VOC, HAPs, reduction efficiency	90%	CleanAIR CDPF guarantee
Discoverer small engines (other than Tier 3 engines) and Nanuq propulsion and genera	85%	California Air Resource Board Currently verified, January 2009, CleanAIR Systems PERMIT
CCV on Crankcase vent	100%	Crankcase emissions redirected to intake

Emissions Factor References

PM_{10}	Max of 8 test from EPA/600/8-90/057F
$PM_{2.5}$	100% PM_{10}
NO_x	Max of 8 test from EPA/600/8-90/057F
SO_2	Sulfur Content Calculation
CO	Max of 6 test from EPA/600/8-90/057F
VOC	Max of 6 test from EPA/600/8-90/057F
Lead	L & E Air Emissions from Sources of Lead and Lead Compounds, EPA 454/R-98-006, May 1998, Section 5.2.2, Distillate oil-fired gas turbines

BACT Emission Limits and Test Methods

PM_{10}	Control Method:	CDPF	Control Efficiency:	85%		
	Uncontrolled emission rate:	1.92 g/bhp-hr	2.573 g/kW-hr		Ref:	Max of 8 test from EPA/600/8-90/057F
	Proposed BACT emission rate:	0.288 g/bhp-hr	0.386 g/kW-hr			
	Proposed emission test methods:	EPA methods 1-4 & 5, at engine load >50%			Interval:	triplicate consecutive 1-hour tests.
NO_x	Control Method:	GCP & integral design	Control Efficiency:	N/A		
	Uncontrolled & Controlled emission rate:	11.72 g/bhp-hr	15.705 g/kW-hr		Ref:	Max of 8 test from EPA/600/8-90/057F
	Proposed emission test methods:	EPA methods 1-4 & 7E, at engine load >50%			Interval:	triplicate consecutive 1-hour tests.
CO	Control Method:	CDPF	Control Efficiency:	90%		
	Uncontrolled emission rate:	6.55 g/bhp-hr	8.777 g/kW-hr		Ref:	Max of 6 test from EPA/600/8-90/057F
	Proposed BACT emission rate:	0.655 g/bhp-hr	0.878 g/kW-hr			
	Proposed emission test methods:	EPA methods 1-4 & 10, at engine load >50%			Interval:	triplicate consecutive 1-hour tests.

Assumptions	References	Conversions
Diesel heat value	Keiser, Ronald email to Chris Tengco, 01/26/09.	1.340 hp/kW
133,098 Btu/gal		454 g/lb
0.1331 MMBtu/gal		3,600 sec/hour
Diesel density	SCANRAFF-Vladimir Ignatjuk Certificate of Quality. 09/19/04.	2,000 lb/ton
847.9 kg/m^3		2 wt. conversion of S to SO2
7.08 lb/gal		264 gal/m^3
Detroit 8V-71N engines diesel heat rate	Detroit Diesel, Engine Performance Model: 8V-71N, 10/15/81	
0.415 lb/hp-hr		
0.0078 MMBtu/hp-hr		

Air Sciences Inc.	PROJECT TITLE: Shell Offshore, Inc.	BY: S. Pryor	
	PROJECT NO: 180-15-1	PAGE: 8	OF: 18
ENGINEERING CALCULATIONS	SUBJECT: Discoverer Emissions-AK OCS	DATE: September 17, 2009	

Emissions Unit: FD-19 Logging Winch **Make/Model:** Detroit / 4-71N **Rating:** 128 hp

Emissions Factors, lb/MMBtu

PM_{10}	$PM_{2.5}$	NO_x	SO_2	CO	VOC	Lead
0.542	0.542	3.310	0.0016	1.850	0.568	2.9E-05

Control Efficiency

PM_{10}	$PM_{2.5}$	NO_x	SO_2 [1]	CO	VOC	Lead
85%	85%	0%	0%	90%	90%	0%

Rated fuel consumpt. MMBtu/hr	Hourly Emission Rate, lb/hr PM_{10}	$PM_{2.5}$	NO_x	SO_2	CO	VOC	Lead
1.0	0.08	0.08	3.31	1.59E-03	0.18	0.06	2.90E-05

Capacity ORR	ORR days/yr	Max Actual fuel consumpt. MMBtu/yr	Annual Emission Rate, ton/yr PM_{10}	$PM_{2.5}$	NO_x	SO_2	CO	VOC	Lead
28%	168	1,120	0.05	0.05	1.85	8.93E-04	0.10	0.03	1.62E-05

Operational Restrictions

Cementing (three units) & Logging (two units) combined maximum 28%

Logging Units only operate when the cementing units are not operating

[1] Sulfur content on all stationary source engines on Discoverer & N 0.0015% by wt.

Control Device Effectiveness		References
Discoverer small engines (other than Tier 3 engines) and Nanuq propulsion and generation Catalytic Diesel Particulate Filter (CDPF) CO, VOC, HAPs, reduction efficiency	90%	CleanAIR CDPF guarantee
Discoverer small engines (other than Tier 3 engines) and Nanuq propulsion and genera	85%	California Air Resource Board Currently verified, January 2009, CleanAIR Systems PERMIT
CCV on Crankcase vent	100%	Crankcase emissions redirected to intake

Emissions Factor References

PM_{10}	Max of 8 test from EPA/600/8-90/057F
$PM_{2.5}$	100% PM_{10}
NO_x	Max of 8 test from EPA/600/8-90/057F
SO_2	Sulfur Content Calculation
CO	Max of 6 test from EPA/600/8-90/057F
VOC	Max of 6 test from EPA/600/8-90/057F
Lead	L & E Air Emissions from Sources of Lead and Lead Compounds, EPA 454/R-98-006, May 1998, Section 5.2.2, Distillate oil-fired gas turbines

BACT Emission Limits and Test Methods

PM_{10}	Control Method:	CDPF	Control Efficiency:	85%		
	Uncontrolled emission rate:	1.92 g/bhp-hr	2.573 g/kW-hr		Ref:	Max of 8 test from EPA/600/8-90/057F
	Proposed BACT emission rate:	0.288 g/bhp-hr	0.386 g/kW-hr			
	Proposed emission test methods:	EPA methods 1-4 & 5, at engine load >50%			Interval:	triplicate consecutive 1-hour tests.
NO_x	Control Method:	GCP & integral design	Control Efficiency:	N/A		
	Uncontrolled & Controlled emission rate:	11.72 g/bhp-hr	15.705 g/kW-hr		Ref:	Max of 8 test from EPA/600/8-90/057F
	Proposed emission test methods:	EPA methods 1-4 & 7E, at engine load >50%			Interval:	triplicate consecutive 1-hour tests.
CO	Control Method:	CDPF	Control Efficiency:	90%		
	Uncontrolled emission rate:	6.55 g/bhp-hr	8.777 g/kW-hr		Ref:	Max of 6 test from EPA/600/8-90/057F
	Proposed BACT emission rate:	0.655 g/bhp-hr	0.878 g/kW-hr			
	Proposed emission test methods:	EPA methods 1-4 & 10, at engine load >50%			Interval:	triplicate consecutive 1-hour tests.

Assumptions	References	Conversions
Diesel heat value	Keiser, Ronald email to Chris Tengco, 01/26/09.	1.340 hp/kW
133,098 Btu/gal		454 g/lb
0.1331 MMBtu/gal		3,600 sec/hour
Diesel density	SCANRAFF-Vladimir Ignatjuk Certificate of Quality. 09/19/04.	2,000 lb/ton
847.9 kg/m^3		2 wt. conversion of S to SO2
7.08 lb/gal		264 gal/m^3
Detroit 8V-71N engines diesel heat rate	Detroit Diesel, Engine Performance Model: 8V-71N, 10/15/81	
0.415 lb/hp-hr		
0.0078 MMBtu/hp-hr		

Air Sciences Inc.	PROJECT TITLE: Shell Offshore, Inc.	BY: S. Pryor	
	PROJECT NO: 180-15-1	PAGE: 9	OF: 18
ENGINEERING CALCULATIONS	SUBJECT: Discoverer Emissions-AK OCS	DATE: September 17, 2009	

Emissions Unit: FD-20 Logging Winch **Make/Model:** John Deere/4024TF270 **Rating:** 36 kW

Emissions Factors, lb/MMBtu

PM_{10}	$PM_{2.5}$	NO_x	SO_2	CO	VOC	Lead
0.141	0.141	1.768	0.0016	1.296	1.768	2.9E-05

Control Efficiency

PM_{10}	$PM_{2.5}$	NO_x	SO_2 [1]	CO	VOC	Lead
85%	85%	0%	0%	90%	90%	0%

Rated fuel consumpt. MMBtu/hr	Hourly Emission Rate, lb/hr PM_{10}	$PM_{2.5}$	NO_x	SO_2	CO	VOC	Lead
0.3	7.14E-03	7.14E-03	5.95E-01	5.37E-04	4.37E-02	5.95E-02	9.76E-06

Capacity ORR	ORR days/yr	Max Actual fuel consumpt. MMBtu/yr	Annual Emission Rate, ton/yr PM_{10}	$PM_{2.5}$	NO_x	SO_2	CO	VOC	Lead
28%	168	377	4.00E-03	4.00E-03	3.34E-01	3.01E-04	2.45E-02	3.34E-02	5.47E-06

Operational Restrictions

Cementing (three units) & Logging (two units) combined maximum 28%

Logging Units only operate when the cementing units are not operating

[1] Sulfur content on all stationary source engines on Discoverer & Na 0.0015% by wt.

Control Device Effectiveness		References
Discoverer small engines (other than Tier 3 engines) and Nanuq propulsion and generation Catalytic Diesel Particulate Filter (CDPF) CO, VOC, HAPs, reduction efficiency	90%	CleanAIR CDPF guarantee
Discoverer small engines (other than Tier 3 engines) and Nanuq propulsion and generati	85%	California Air Resource Board Currently verified, January 2009, CleanAIR Systems PERMIT

Emissions Factor References

PM_{10}	Tier 2 emission limit
$PM_{2.5}$	100% PM_{10}
NO_x	Tier 2 emission limit
SO_2	Sulfur Content Calculation
CO	Tier 2 emission limit
VOC	Tier 2 emission limit
Lead	L & E Air Emissions from Sources of Lead and Lead Compounds, EPA 454/R-98-006, May 1998, Section 5.2.2, Distillate oil-fired gas turbines

BACT Emission Limits and Test Methods

PM_{10}	Control Method:	CDPF & Integral Design	Control Efficiency:	85%		
	Uncontrolled emission rate:	0.6 g/kW-hr			Ref:	Tier 2 emission limit
	Proposed BACT emission rate:	0.09 g/kW-hr				
	Proposed emission test methods:	EPA methods 1-4 & 5, at engine load >50%			Interval:	triplicate consecutive 1-hour tests.
NO_x	Control Method:	Integral Design	Control Efficiency:	N/A		
	Uncontrolled & Controlled emission rate:	7.5 g/kW-hr			Ref:	Tier 2 emission limit
	Proposed emission test methods:	EPA methods 1-4 & 7E, at engine load >50%			Interval:	triplicate consecutive 1-hour tests.
CO	Control Method:	CDPF & Integral Design	Control Efficiency:	90%		
	Uncontrolled emission rate:	5.5 g/kW-hr			Ref:	Tier 2 emission limit
	Proposed BACT emission rate:	0.55 g/kW-hr				
	Proposed emission test methods:	EPA methods 1-4 & 10, at engine load >50%			Interval:	triplicate consecutive 1-hour tests.

Assumptions	References	Conversions
Diesel heat value	Keiser, Ronald email to Chris Tengco, 01/26/09.	1.340 hp/kW
133,098 Btu/gal		454 g/lb
0.1331 MMBtu/gal		3,600 sec/hour
Diesel density	SCANRAFF-Vladimir Ignatjuk Certificate of Quality. 09/19/04.	2,000 lb/ton
847.9 kg/m^3		2 wt. conversion of S to SO2
7.08 lb/gal		264 gal/m^3
ICE Engines diesel heat rate	John Deere Model 4024TF270 Engine Performance, 06/04	
17.9 lb/hr		
0.007 MMBtu/hp-hr		

Air Sciences Inc.	PROJECT TITLE: Shell Offshore, Inc.	BY: S. Pryor	
	PROJECT NO: 180-15-1	PAGE: 11	OF: 18
ENGINEERING CALCULATIONS	SUBJECT: Discoverer Emissions-AK OCS	DATE: September 17, 2009	

Emissions Unit: FD-23 Incinerator **Make/Model:** TeamTec/GS500C **Rating:** 276 lb/hr

Emissions Factors, lb/lb

PM_{10}	$PM_{2.5}$	NO_x	SO_2	CO	VOC	Lead
0.0041	0.0035	0.0025	0.0013	0.0155	0.0015	1.07E-04

Control Efficiency

PM_{10}	$PM_{2.5}$	NO_x	SO_2 [1]	CO	VOC	Lead
0%	0%	0%	0%	0%	0%	0%

Hourly Emission Rate, lb/hr

PM_{10}	$PM_{2.5}$	NO_x	SO_2	CO	VOC	Lead
1.13	0.97	0.69	0.35	4.28	0.41	0.03

300 lb/trash per day

Daily Emission Rate, lb/hr

PM_{10}	$PM_{2.5}$	NO_x	SO_2	CO	VOC	Lead
1.23	1.05	0.75	0.38	4.65	0.45	0.03

800 lb/trash per day

Daily Emission Rate, lb/hr

PM_{10}	$PM_{2.5}$	NO_x	SO_2	CO	VOC	Lead
3.28	2.80	2.00	1.00	12.40	1.20	0.09

1300 lb/trash per day

Daily Emission Rate, lb/hr

PM_{10}	$PM_{2.5}$	NO_x	SO_2	CO	VOC	Lead
5.33	4.55	3.25	1.63	20.15	1.95	0.14

300 lb/trash per day

Annual Emission Rate, ton/yr

ORR days/yr	PM_{10}	$PM_{2.5}$	NO_x	SO_2	CO	VOC	Lead
168	0.10	0.09	0.06	0.03	0.39	0.04	2.68E-03

Operational Restrictions

Discoverer Incinerator, when two HPUs are operating, limited to 300 lb/trash per day
Discoverer Incinerator, when one HPU is operating, limited to 800 lb/trash per day
Discoverer Incinerator, when no HPUs are operating, limited to 1300 lb/trash per day
[1] Sulfur content on all stationary source engines on Discov 0.0015% by wt.

Emissions Factor References

PM_{10}	ORR
$PM_{2.5}$	ORR
NO_x	AP42 Table 2.2-1, multiple hearth
SO_2	ORR
CO	AP42 Table 2.2-1, multiple hearth
VOC	AP42 Table 2.1-12, 10/96
Lead	AP42 Table 2.2-2 - Metals Emission Factors for Mass Burn and Modular Excess Air Combustors

BACT Emission Limits and Test Methods

PM_{10}	Control Method:	GCP & integral design	Control Efficiency:	N/A		
	Uncontrolled & Controlled emission rate:	8.2	lb/ton		Ref:	ORR
	Proposed emission test methods:	EPA methods 1-4 & 5, at engine load >50%			Interval:	triplicate consecutive 1-hour tests.
NO_x	Control Method:	GCP & integral design	Control Efficiency:	N/A		
	Uncontrolled & Controlled emission rate:	5	lb/ton		Ref:	AP42 Table 2.2-1, multiple hearth
	Proposed emission test methods:	EPA methods 1-4 & 7E, at engine load >50%			Interval:	triplicate consecutive 1-hour tests.
CO	Control Method:	GCP & integral design	Control Efficiency:	N/A		
	Uncontrolled & Controlled emission rate:	31	lb/ton		Ref:	AP42 Table 2.2-1, multiple hearth
	Proposed emission test methods:	EPA methods 1-4 & 10, at engine load >50%			Interval:	triplicate consecutive 1-hour tests.

Assumptions	References	Conversions
Diesel heat value	Keiser, Ronald email to Chris Tengco, 01/26/09.	1.340 hp/kW
133,098 Btu/gal		454 g/lb
0.1331 MMBtu/gal		3,600 sec/hour
Diesel density	SCANRAFF-Vladimir Ignatjuk Certificate of Quality. 09/19/04.	2,000 lb/ton
847.9 kg/m^3		2 wt. conversion of S to SO2
7.08 lb/gal		264 gal/m^3
ICE Engines diesel heat rate	AP42 Table 3.3-1, 10/96	
7,000 Btu/hp-hr		
0.007 MMBtu/hp-hr		

Air Sciences Inc.	PROJECT TITLE: Shell Offshore, Inc.	BY: S. Pryor
	PROJECT NO: 180-15-1	PAGE: 13 OF: 18
ENGINEERING CALCULATIONS	SUBJECT: Discoverer Emissions-AK OCS	DATE: September 17, 2009

Emissions Units: Ice Breaker **Rating:** ICE Engines 25,520 hp Boilers 10 MMBtu/hr

Emissions Factors

	Units	PM_{10}	$PM_{2.5}$	NO_x	SO_2	CO	VOC	Lead
ICE Engines	lb/MMBtu	0.249	0.22	5.876	0.2196	0.786	0.141	2.9E-05
Incinerators	lb/lb	0.0067	0.0046	0.0015	0.00125	0.15	0.05	1.1E-04

Control Efficiency

	PM_{10}	$PM_{2.5}$	NO_x	SO_2 [1]	CO	VOC	Lead
ICE Engines	0%	0%	0%	0%	0%	0%	0%
Incinerators	0%	0%	0%	0%	0%	0%	0%

	Rating		Rated fuel consumpt. MMBtu/hr	Hourly Emission Rate, lb/hr PM_{10}	$PM_{2.5}$	NO_x	SO_2	CO	VOC	Lead
ICE Engines			188.64	47.00	41.50	1108.42	41.42	148.22	26.60	5.47E-03
Incinerators	154	lb/hr		1.02	0.70	0.23	0.19	23.10	7.70	1.64E-02
Total			188.64	48.02	42.20	1108.65	41.62	171.32	34.30	2.19E-02

	ORR days/yr	Max Actual fuel consumpt. MMBtu/yr	Annual Emission Rate, ton/yr PM_{10}	$PM_{2.5}$	NO_x [2]	SO_2	CO	VOC	Lead
ICE Engines	168	760,596	95	84	849	84	299	54	1.10E-02
Incinerators	168		2.06	1.41	0.47	0.39	46.57	15.52	3.31E-02
Total		760,596	97	85	850	84	345	69	4.41E-02

Operational Restrictions

[1] Sulfur content on ice breaker, anchor hai 0.19% by wt.

[2] NOx ICE operation restriction based on 38% of 168 days

ICE Emissions Factor References

PM_{10}	generic factors consistent w/Ice mgmt fleet ORRs
$PM_{2.5}$	generic factors consistent w/Ice mgmt fleet ORRs
NO_x	generic factors consistent w/Ice mgmt fleet ORRs
SO_2	AP42 Table 3.4-1, 10/96
CO	AP42 Table 3.4-1, 10/96
VOC	Corbett, Koehler. Revised: 05/03
Lead	L & E Air Emissions from Sources of Lead and Lead Compounds, EPA 454/R-98-006, May 1998, Section 5.2.2, Distillate oil-fired gas turbines

Incinerator Emissions Factor References

PM_{10}	AP42 Table 2.1-12, 10/96 & Appendix B.1 2.1
$PM_{2.5}$	AP42 Table 2.1-12, 10/96 & Appendix B.1 2.1
NO_x	AP42 Table 2.1-12, 10/96
SO_2	AP42 Table 2.1-12, 10/96
CO	AP42 Table 2.1-12, 10/96
VOC	AP42 Table 2.1-12, 10/96
Lead	AP42 Table 2.2-2 - Metals Emission Factors for Mass Burn and Modular Excess Air Combustors

Assumptions	References	Conversions
Diesel heat value	Keiser, Ronald email to Chris Tengco, 01/26/09.	1.340 hp/kW
133,098 Btu/gal		454 g/lb
0.1331 MMBtu/gal		3,600 sec/hour
Diesel density	SCANRAFF-Vladimir Ignatjuk Certificate of Quality. 09/19/04.	2,000 lb/ton
847.9 kg/m^3		2 wt. conversion of S to SO2
7.08 lb/gal		264 gal/m^3
ICE Engines diesel heat rate	AP42 Table 3.3-1, 10/96	
7,000 Btu/hp-hr		
0.007 MMBtu/hp-hr		

Emissions Units: Anchor Handler Tor Viking II

Emissions Factors

	Units	PM_{10}	$PM_{2.5}$	NO_x	SO_2	CO	VOC	Lead
Propulsion Engines	lb/MMBtu	0.057	0.057	0.834	0.2196	0.786	0.090	2.9E-05
Generator Engines	lb/MMBtu	0.057	0.057	0.533	0.2196	0.786	0.090	2.9E-05
Boiler	lb/MMBtu	0.025	0.025	0.150	0.2241	0.038	0.002	9.0E-06
Incinerator	lb/lb	0.007	0.005	0.0025	0.0013	0.150	0.050	1.1E-04

Control Efficiency

	PM_{10}	$PM_{2.5}$	NO_x	SO_2 [1]	CO	VOC	Lead
All sources	0%	0%	0%	0%	0%	0%	0%

	Rating		Rated fuel consumpt. MMBtu/hr	Hourly Emission Rate, lb/hr PM_{10}	$PM_{2.5}$	NO_x	SO_2	CO	VOC	Lead
Propulsion Engines	14,128	hp	98.90	5.67	5.67	82.48	21.72	77.70	8.90	2.87E-03
Generator Engines	2,336	hp	16.35	0.94	0.94	8.72	3.59	12.85	1.47	4.74E-04
Boiler	1.37	MMBtu/hr	1.37	0.03	0.03	0.21	0.31	0.05	0.00	1.23E-05
Incinerators	151.23	lb/hr		1.01	0.69	0.38	0.19	22.68	7.56	1.61E-02
Total			116.62	7.64	7.33	91.78	25.80	113.29	17.94	1.95E-02

	ORR days/yr	Max Actual fuel consumpt. MMBtu/yr	Annual Emission Rate, ton/yr PM_{10}	$PM_{2.5}$	NO_x [2]	SO_2	CO	VOC	Lead
Propulsion Engines	168	398,749	11.42	11.42	63.18	43.78	156.65	17.94	5.78E-03
Generator Engines	168	65,931	1.89	1.89	6.68	7.24	25.90	2.97	9.56E-04
Boiler	168	5,524	0.07	0.07	0.42	0.62	0.10	0.00	2.49E-05
Incinerators	168		2.03	1.39	0.76	0.38	45.73	15.24	3.25E-02
Total		470,204	15.41	14.77	71.04	52.02	228.39	36.16	3.92E-02

Operational Restrictions

[1] Sulfur content on ice breaker, anchor hand 0.19% by wt.

[2] NOx ICE operation restriction based on 38% of 168 days

Propulsion & Generator Engine Emissions Factor References

PM_{10}	AP42 Table 3.4-2, 10/96
$PM_{2.5}$	100% PM_{10}
NO_x	Permit R100CS-AK-07-01, controlled
SO_2	AP42 Table 3.4-1, 10/96
CO	AP42 Table 3.4-1, 10/96
VOC	AP42 Table 3.4-1, 10/96
Lead	AP42 Table 3.3-2, Speciated Organic Compound Emission Factors For Uncontrolled Diesel Engines

Boiler Emissions Factor References

PM_{10}	AP42 Table 1.3-1, 9/98 & AP42 Table 1.3-2, 9/98
$PM_{2.5}$	100% PM_{10}
NO_x	Permit R100CS-AK-07-01
SO_2	AP42 Table 1.3-1, 9/98
CO	AP42 Table 1.3-1, 9/98
VOC	AP42 Table 1.3-3, 9/98
Lead	Table 1.3-10. Emission Factors For Trace Elements From Distillate Fuel Oil Combustion Sources

Incinerator Emissions Factor References

PM_{10}	AP42 Table 2.1-12, 10/96 & Appendix B.1 2.1
$PM_{2.5}$	AP42 Table 2.1-12, 10/96 & Appendix B.1 2.1
NO_x	AP42 Table 2.2-1, multiple hear
SO_2	AP42 Table 2.1-12, 10/96
CO	AP42 Table 2.1-12, 10/96
VOC	AP42 Table 2.1-12, 10/96
Lead	Table 2.2-2 - Metals Emission Factors for Mass Burn and Modular Excess Air Combustors

Assumptions	References	Conversions
Diesel heat value	Keiser, Ronald email to Chris Tengco, 01/26/09.	1.340 hp/kW
133,098 Btu/gal		454 g/lb
0.1331 MMBtu/gal		3,600 sec/hour
Diesel density	SCANRAFF-Vladimir Ignatjuk Certificate of Quality. 09/19/04.	2,000 lb/ton
847.9 kg/m^3		2 wt. conversion of S to SO2
7.08 lb/gal		264 gal/m^3
ICE Engines diesel heat rate	AP42 Table 3.3-1, 10/96	
7,000 Btu/hp-hr		
0.007 MMBtu/hp-hr		

Emissions Units: Anchor Handler Hull 247

Emissions Factors

	Units	PM_{10}	$PM_{2.5}$	NO_x	SO_2	CO	VOC	Lead
Ice Engines	lb/MMBtu	0.059	0.059	0.423	0.2196	0.823	0.094	2.9E-05
Boiler	lb/MMBtu	0.025	0.025	0.180	0.2241	0.038	0.002	9.0E-06
Incinerator	lb/lb	0.007	0.005	0.0025	0.0013	0.150	0.050	1.1E-04

Control Efficiency

	PM_{10}	$PM_{2.5}$	NO_x	SO_2 [1]	CO	VOC	Lead
All sources	0%	0%	0%	0%	0%	0%	0%

	Rating		Rated fuel consumpt. MMBtu/hr	Hourly Emission Rate, lb/hr PM_{10}	$PM_{2.5}$	NO_x	SO_2	CO	VOC	Lead
Ice Engines	24	MWe	180.16	10.59	10.59	76.22	39.56	148.20	17.02	5.22E-03
Boiler	4	MMBtu/hr	4.00	0.10	0.10	0.72	0.90	0.15	0.01	3.60E-05
Incinerators	151.23	lb/hr		1.01	0.69	0.38	0.19	22.68	7.56	1.61E-02
Total			184.16	11.69	11.37	77.32	40.65	171.04	24.59	2.14E-02

	ORR days/yr	Max Actual fuel consumpt. MMBtu/yr	Annual Emission Rate, ton/yr PM_{10}	$PM_{2.5}$	NO_x [2]	SO_2	CO	VOC	Lead
Ice Engines	168	726,409	21.34	21.34	58.39	79.75	298.78	34.32	1.05E-02
Boiler	168	16,128	0.20	0.20	1.45	1.81	0.30	0.01	7.26E-05
Incinerators	168		2.03	1.39	0.76	0.38	45.73	15.24	3.25E-02
Total		742,537	23.57	22.93	60.61	81.94	344.82	49.57	4.31E-02

Operational Restrictions

[1] Sulfur content on ice breaker, anchor hand 0.19% by wt.

[2] NOx ICE operation restriction based on 38% of 168 days

ICE Engine Emissions Factor References

PM_{10}	Tier 4 emission limit
$PM_{2.5}$	100% PM_{10}
NO_x	SCR Control
SO_2	AP42 Table 3.4-1, 10/96
CO	Tier 2 emission limit
VOC	Tier 4 emission limit
Lead	AP42 Table 3.3-2, Speciated Organic Compound Emission Factors For Uncontrolled Diesel Engines

Boiler Emissions Factor References

PM_{10}	AP42 Table 1.3-1, 9/98 & AP42 Table 1.3-2, 9/98
$PM_{2.5}$	100% PM_{10}
NO_x	AP42 Table 1.3-1, 9/98
SO_2	AP42 Table 1.3-1, 9/98
CO	AP42 Table 1.3-1, 9/98
VOC	AP42 Table 1.3-3, 9/98
Lead	Table 1.3-10. Emission Factors For Trace Elements From Distillate Fuel Oil Combustion Sources

Incinerator Emissions Factor References

PM_{10}	AP42 Table 2.1-12, 10/96 & Appendix B.1 2.1
$PM_{2.5}$	AP42 Table 2.1-12, 10/96 & Appendix B.1 2.1
NO_x	AP42 Table 2.2-1, multiple hear
SO_2	AP42 Table 2.1-12, 10/96
CO	AP42 Table 2.1-12, 10/96
VOC	AP42 Table 2.1-12, 10/96
Lead	Table 2.2-2 - Metals Emission Factors for Mass Burn and Modular Excess Air Combustors

Assumptions	References	Conversions
Diesel heat value	Keiser, Ronald email to Chris Tengco, 01/26/09.	1.340 hp/kW
133,098 Btu/gal		454 g/lb
0.1331 MMBtu/gal		3,600 sec/hour
Diesel density	SCANRAFF-Vladimir Ignatjuk Certificate of Quality. 09/19/04.	2,000 lb/ton
847.9 kg/m^3		2 wt. conversion of S to SO2
7.08 lb/gal		264 gal/m^3
ICE Engines diesel heat rate	AP42 Table 3.3-1, 10/96	
7,000 Btu/hp-hr		
0.007 MMBtu/hp-hr		

Emissions Units: OSR Fleet Nanuq (Main Oil Spill Response Vessel)

Emissions Factors

	Units	PM_{10}	$PM_{2.5}$	NO_x	SO_2	CO	VOC	Lead
ICE Propulsion Engines	lb/MMBtu	0.044	0.044	3.536	0.0016	0.190	0.257	2.90E-05
ICE Generator Engines	lb/MMBtu	0.451	0.362	5.970	0.0016	0.79	0.141	2.90E-05
Incinerator	lb/lb	6.65E-03	4.55E-03	1.50E-03	1.25E-03	1.50E-01	5.00E-02	1.07E-04

Control Efficiency

	PM_{10}	$PM_{2.5}$	NO_x	SO_2 [1]	CO	VOC	Lead
ICE Propulsion & Generators	85%	85%	0%	0%	90%	90%	0%
All Remaining Sources	0%	0%	0%	0%	0%	0%	0%

	Rating	Max Actual fuel consumpt. MMBtu/hr	Hourly Emission Rate, lb/hr PM_{10}	$PM_{2.5}$	NO_x	SO_2	CO	VOC	Lead
ICE Propulsion Engines	5,420 kW	46.008	0.30	0.30	162.70	0.07	0.87	1.18	1.33E-03
ICE Generator Engines	2,570 hp	17.990	1.22	0.98	107.40	0.03	1.41	0.25	5.22E-04
Incinerator	125 lb/hr		0.83	0.57	0.19	0.16	18.75	6.25	1.33E-02
Total Nanuq		**63.998**	**2.35**	**1.85**	**270.28**	**0.26**	**21.04**	**7.69**	**1.52E-02**

	ORR days/yr	Capacity	Use hr/day	fuel consumpt. MMBtu/yr	Annual Emission Rate, ton/yr PM_{10}	$PM_{2.5}$	NO_x	SO_2	CO	VOC	Lead
ICE Propulsion Engines [2]	168	100%	24	67,081	0.22	0.22	118.61	0.05	0.64	0.86	9.73E-04
ICE Generator Engines [3]	168	100%	24	17,888	0.61	0.49	53.40	0.01	0.70	0.13	2.59E-04
Incinerator	168		24		1.68	1.15	0.38	0.32	37.80	12.60	2.68E-02
Total Nanuq				**84,969.763**	**2.50**	**1.85**	**172.38**	**0.38**	**39.14**	**13.59**	**2.81E-02**

Operational Restrictions

[1] Sulfur content on all stationary source engines on Discoverer & Nanuq 0.0015% by wt.
[2] OSR Main Ship propulsion limited to: 3000 gal/day
[3] OSR Main Ship generation limited to : 800 gal/day

Control Device Effectiveness		References
Discoverer small engines (other than Tier 3 engines) and Nanuq propulsion and generation Catalytic Diesel Particulate Filter (CDPF) CO, VOC, HAPs, reduction efficiency	90%	CleanAIR CDPF guarantee
Discoverer small engines (other than Tier 3 engines) and Nanuq propulsion and generation CDPF PM reduction efficiency	85%	California Air Resource Board Currently verified, January 2009, CleanAIR Systems PERMIT

Emission Limits and Test Methods

ICE Propulsion Engines

PM_{10}	Control Method:	CDPF	Control Efficiency:	85%		
	Uncontrolled emission rate:	0.17 g/kW-hr	0.228 g/hp-hr		Ref:	Caterpillar 3608 Specification Sheet, DM5529, 10/06
	Proposed BACT emission rate:	0.026 g/kW-hr	0.034 g/hp-hr			
	Proposed emission test methods:	EPA methods 1-4 & 5, at engine load >50%			Interval:	triplicate consecutive 1-hour tests.
CO	Control Method:	CDPF	Control Efficiency:	90%		
	Uncontrolled emission rate:	0.73 g/kW-hr	0.978 g/hp-hr		Ref:	Caterpillar 3608 Specification Sheet, DM5529, 10/06
	Proposed BACT emission rate:	0.073 g/kW-hr	0.098 g/hp-hr			
	Proposed emission test methods:	EPA methods 1-4 & 10, at engine load >50%			Interval:	triplicate consecutive 1-hour tests.

ICE Generator Engines

PM_{10}	Control Method:	CDPF	Control Efficiency:	85%		
	Uncontrolled emission rate:	1.92 g/kW-hr	2.57 g/hp-hr		Ref:	Corbett, Koehler. Revised: 05/03
	Proposed BACT emission rate:	0.288 g/kW-hr	0.39 g/hp-hr			
	Proposed emission test methods:	EPA methods 1-4 & 5, at engine load >50%			Interval:	triplicate consecutive 1-hour tests.
CO	Control Method:	CDPF	Control Efficiency:	90%		
	Uncontrolled emission rate:	5.50E-03 lb/hp-hr	2.49 g/hp-hr		Ref:	AP42 Table 3.4-2, 10/96
	Proposed BACT emission rate:	5.50E-04 lb/hp-hr	0.25 g/hp-hr			
	Proposed emission test methods:	EPA methods 1-4 & 10, at engine load >50%			Interval:	triplicate consecutive 1-hour tests.

Emissions Factor References

All Sources	**SO_2**	Sulfur Content Calculation
All ICE Engines	**Lead**	L & E Air Emissions from Sources of Lead and Lead Compounds, EPA 454/R-98-006, May 1998, Section 5.2.2, Distillate oil-fired gas turbines
OSR Main Ship ICE Propulsion Engines	**PM_{10}, NO_x, CO, VOC**	Caterpillar 3608 Specification Sheet, DM5529, 10/06
	$PM_{2.5}$	100% PM_{10}
OSR Main Ship ICE Generators	**NO_x, CO, VOC**	AP42 Table 3.4-2, 10/96
	PM_{10}, $PM_{2.5}$	Corbett, Koehler. Revised: 05/03
OSR Main Ship Incinerator	**PM_{10}, $PM_{2.5}$, NO_x, CO, VOC**	AP42 Table 2.1-12, 10/96
	Lead	AP42 Table 2.2-2 - Metals Emission Factors for Mass Burn and Modular Excess Air Combustors

Assumptions			References	Conversions	
Diesel heat value	133,098 Btu/gal	0.1331 MMBtu/gal	Keiser, Ronald email to Chris Tengco, 01/26/09.	1.340	hp/kW
Diesel density	847.9 kg/m^3	7.08 lb/gal	SCANRAFF-Vladimir Ignatjuk Certificate of Quality. 09/19/04.	454	g/lb
ICE Engines diesel heat rate				3,600	sec/hour
	7,000 Btu/hp-hr	0.007 MMBtu/hp-hr	AP42 Table 3.3-1, 10/96	2,000	lb/ton
OSR Main Ship Propulsion (Cat/3608) diesel heat rate				2	wt. conversion of S to SO2
204.7 g/kW-hr	6335 Btu/hp-hr	0.0063 MMBtu/hp-hr		264	gal/m^3

Emissions Units: OSR Fleet Kvichak 34-foot Oil Spill Response Work Boats

Emissions Factors

	Units	PM_{10}	$PM_{2.5}$	NO_x	SO_2	CO	VOC	Lead
OSR Work Boat ICE Propulsion Engines	lb/MMBtu	0.024	0.024	1.463	0.2020	0.049	0.025	2.90E-05
OSR Work Boat ICE Generators	lb/MMBtu	0.31	0.31	4.41	0.2020	0.95	0.35	2.90E-05

Control Efficiency

	PM_{10}	$PM_{2.5}$	NO_x	SO_2 [1]	CO	VOC	Lead
All Sources	0%	0%	0%	0%	0%	0%	0%

	Rating	Max Actual fuel consumpt. MMBtu/hr	Hourly Emission Rate, lb/hr PM_{10}	$PM_{2.5}$	NO_x	SO_2	CO	VOC	Lead
OSR Work Boat ICE Propulsion Engines	1,800 hp	12.600	0.31	0.31	18.43	2.55	0.62	0.31	3.65E-04
OSR Work Boat ICE Generators	36 hp	0.252	0.08	0.08	1.11	0.05	0.24	0.09	7.31E-06
Total OSR Work Boats		**13**	**0.38**	**0.38**	**19.54**	**2.60**	**0.85**	**0.40**	**3.73E-04**

ORR 168 days/yr

	Capacity	Use hr/day	Max Actual fuel consumpt. MMBtu/yr	Annual Emission Rate, ton/yr PM_{10}	$PM_{2.5}$	NO_x	SO_2	CO	VOC	Lead
OSR Work Boat ICE Propulsion Engines	100%	24	50,803	0.62	0.62	37.15	5.13	1.24	0.62	7.37E-04
OSR Work Boat ICE Generators	100%	24	1,016	0.16	0.16	2.24	0.10	0.48	0.18	1.47E-05
Total OSR Work Boats			**51,819**	**0.77**	**0.77**	**39.39**	**5.23**	**1.72**	**0.80**	**7.51E-04**

Operational Restrictions

[1] Sulfur content on ice breaker, anchor handler, and OSR work boats 0.1900% by wt.

Control Device Effectiveness	References
Discoverer small engines (other than Tier 3 engines) and Nanuq propulsion and generation Catalytic Diesel Particulate Filter (CDPF) CO, VOC, HAPs, reduction efficiency	90% CleanAIR CDPF guarantee
Discoverer small engines (other than Tier 3 engines) and Nanuq propulsion and generation CDPF PM reduction efficiency	85% California Air Resource Board Currently verified, January 2009, CleanAIR Systems PERMIT

Emissions Factor References

All Sources	**SO_2**	Sulfur Content Calculation
All ICE Engines	**Lead**	L & E Air Emissions from Sources of Lead and Lead Compounds, EPA 454/R-98-006, May 1998, Section 5.2.2, Distillate oil-fired gas turbines
OSR Work Boat ICE Propulsion Engines	**PM_{10}, NO_x, CO, VOC**	Cummins Engine Model: QSB5.9-305 MCD Spec Sheet, 10/06
	$PM_{2.5}$ 100% PM_{10}	
OSR Work Boat ICE Generators	**PM_{10}, NO_x, CO, VOC**	AP42 Table 3.3-1, 10/96
	$PM_{2.5}$ 100% PM_{10}	

Assumptions			References	Conversions	
Diesel heat value	133,098 Btu/gal	0.1331 MMBtu/gal	Keiser, Ronald email to Chris Tengco, 01/26/09.	1.340	hp/kW
Diesel density	847.9 kg/m^3	7.08 lb/gal	SCANRAFF-Vladimir Ignatjuk Certificate of Quality. 09/19/04.	454	g/lb
ICE Engines diesel heat rate				3,600	sec/hour
	7,000 Btu/hp-hr	0.007 MMBtu/hp-hr	AP42 Table 3.3-1, 10/96	2,000	lb/ton
				2	wt. conversion of S to SO2
				264	gal/m^3

ATTACHMENT B

Updated ambient impact analysis

Note: The ambient impact discussion provided below is in the same format and section numbers as in the May 29, 2009 (Updated Attachments D and E - Response to EPA Region 10 March 12, 2009 2nd Letter of Incompleteness) and earlier submittals, so that the updates can be easily identified.

This update introduces three incinerator operation scenarios: Base Operating Scenario, Alternate Scenario #1, Alternate Scenario #2. The base case is defined as: On days when there is no HPU usage, incinerator use will be limited to 1300 lb feed.

The alternate operating scenario No. 1 is defined as: On days when HPU fuel use is up to the equivalent of one HPU unit operating at capacity for 24 hours, incineration use will be limited to 800 lb feed.

Alternate operating scenario No. 2 is defined as: On days when no HPU unit is used, incineration use will be limited to 1300 lb feed.

Gray shading indicates changes since the May 29th supplemental submittal.

SECTION 5

AMBIENT IMPACTS

5.7 PSD Modeling Assessment Phases – Preliminary Analysis and Full Impact Analysis

…The results of the preliminary analysis determine whether a full impact analysis (facility plus competing regional sources) for a particular pollutant is necessary. If the ambient impacts from the preliminary analysis are greater than the PSD Significant Impact Levels (SILs) shown in Table 5-6 then the extent of the Significant Impact Area (SIA) of the proposed project is to be determined.

Table 5-6: Summary of Significant Impact Levels and Related Significant Areas

Pollutant	Averaging Time	PSD Class II SIL (µg/m^3)	Screening Model, Max, SIA (km)		
			Base Operating Scenario	Alt. Operating Scenario #1	Alt. Operating Scenario #2
Nitrogen Dioxide (NO_2)	Annual	1	50	50	50
Particulate Matter ($PM_{2.5}$)	24-hour	NA	NA	NA	NA
	Annual	NA	NA	NA	NA
Particulate Matter (PM_{10})	24-hour	5	32.6	32.5	32.5
	Annual	1	3.5	3.7	3.9
Sulfur Dioxide (SO_2)	3-hour	25	11.1	11.1	11.1
	24-hour	5	50	50	50
	Annual	1	5.2	5.3	5.4
Carbon Monoxide (CO)	1-hour	2,000	Not significant	Not significant	Not significant
	8-hour	500	Not Significant	Not Significant	Not Significant

SIL Significant Impact Level
SIA Significant Impact Area
NA not applicable

Initially, the SIA is determined for every relevant averaging time for a particular pollutant. The final SIA for that pollutant is the largest area for each of the various averaging times. According to the EPA's Draft New Source Review Workshop Manual (EPA, 1990), the SIA is a circular area with a radius extending from the source to: (1) the most distant point where approved dispersion modeling predicts a significant ambient impact will occur, or (2) a modeling receptor distance of 50 kilometers, whichever is less. Therefore, a SIA cannot be greater than 50 kilometers for any pollutant. In addition, the Guideline on Air Quality Models (40 CFR 51, Appendix W), indicates that traditional steady-state models (e.g., ISC-PRIME) are applicable for transport distances of 50 km or less. 50 km is the useful distance to which most steady-state Gaussian plume models are considered accurate for setting emission limits.

The full impact analysis expands the preliminary impact analysis by considering emissions from both the proposed project as well as other sources in the SIA (the competing sources). The full impact analysis may also consider other sources outside the SIA that could cause significant impacts in the SIA of the proposed source. The results from the full impact analysis are used to demonstrate compliance with NAAQS and PSD increments. The source inventory for the cumulative NAAQS analysis includes all nearby sources that have significant impacts within the proposed source SIA, while the source inventory for the cumulative PSD increment analysis is limited to increment-affecting sources (new sources and changes to existing sources that have occurred since the applicable increment baseline date).

The full impact analysis is limited to receptor locations within the proposed project's SIA. The modeling results from the NAAQS cumulative impact analysis are added to representative ambient background concentrations, and the total concentrations are compared to the NAAQS. However, the modeled air quality impacts for all increment-consuming sources are directly compared to the PSD increments to determine compliance (without consideration of ambient background concentrations).

Emissions of lead are insignificant and were not evaluated.

SECTION 6

BASELINE CONCENTRATIONS

…Table 6-2 provides a representative estimate of regional background concentrations in remote locations of the Alaska OCS where there are no significant pollution sources with the exception of particulates which are influenced by local sources such as windblown dust from unpaved roads in the village of Wainwright.

Table 6-2: Baseline Concentrations

Pollutant	Averaging Time	Monitored Concentrations Wainwright (1) ($\mu g/m^3$)
NO_2	Annual (2)	2
$PM_{2.5}$	24-hour	14
	Annual (2)	2
PM_{10}	24-hour	114
	Annual (2)	10
SO_2	3-hour	17
	24-hour	10
	Annual (2)	0.5
CO	1-hour	1,050
	8-hour	535

1 Wainwright data provided is for November 2008 through July 2009.

2 Annual average values are based on the period average values from November 2008 through July 2009.

NA Not applicable

SECTION 7

IMPACT MODELING RESULTS

7.1 Worst-Case Concentration Impacts

The *Discoverer* drilling impact summary of Table 7-1 (highest of three modeling scenarios) is developed from the individual source impacts and background concentrations (for NAAQS) for all applicable averaging times. Because the Base Operating Scenario, Alternate Operating Scenario No.1, and Alternate Operating Scenario No. 2 modeling analyses define the worst-case annual impacts, Shell's Chukchi Sea exploratory drilling program will comply with the NAAQS and PSD increments. The modeling results and associated calculations for the annual impacts for the Base Operating Scenario, Alternate Operating Scenario No. 1, and Alternate Operating Scenario No. 2 are provided in Tables 7-2a, 7-2b, and 7-2c. Results and associated calculations for both short-term and annual impacts are summarized in Tables 7-3a, 7-3b, and 7-3c. All electronic modeling files and associated calculations are provided in the CD.

Table 7-1: Summary of Screening Maximum Estimated Short-Term and Annual Concentrations all Sources Combined – Highest of Three Modeling Scenarios

Pollutant	Averaging Time	NAAQS[1] (µg/m^3)	Screening Model Max. Impact Plus Background[2] (µg/m^3)	PSD Class II Increment (µg/m^3)	Screening Model Max. Impact No Background[3] (µg/m^3)
Nitrogen Dioxide (NO_2)	Annual	100	20.2	25	18.2
Particulate Matter ($PM_{2.5}$)	24-hour	35	32.4	NA	NA
	Annual	15	3.3	NA	NA
Particulate Matter (PM_{10})	24-hour	150	133.4	30	19.4
	Annual	50	11.4	17	1.4
Sulfur Dioxide (SO_2)	3-hour	1,300	85.8	512	68.8
	24-hour	365	36.8	91	26.8
	Annual	80	2.5	20	2.0
Carbon Monoxide (CO)	1-hour	40,000	1,444.7	NA	NA
	8-hour	10,000	890.2	NA	NA

[1] National Ambient Air Quality Standards

[2] Maximum modeled impacts plus background concentrations are compared to the NAAQS.

[3] Maximum modeled impacts only (no background concentrations included) are compared to the PSD Increments.

NA Not applicable

Table 7-2a: Impact Scenarios Used to Define Screening Maximum Annual Impacts from All Sources – Base Operating Scenario

Pollutant	Model Run	Impact Category	Max. Impact Location X(m)	Max. Impact Location Y(m)	Modeled 1-Hour Impact [1]	Persistence Factor	Emiss. Adjust [2]	Conc. (μg/m³)
NO_2 [3]	All Sources	At or Beyond Hull	15.7	55.0	978.2	0.10	0.1726	12.7
	No xxd [2]	At or Beyond Hull	15.7	55.0	256.8	0.10	0.2877	5.5
							Total Annual NO_2 Impact (μg/m³) >	*18.2*
Pollutant	Model Run	Impact Category	Max. Impact Location X(m)	Max. Impact Location Y(m)	Modeled 1-Hour Impact [1]	Persistence Factor	Emiss. Adjust [2]	Conc. (μg/m³)
$PM_{2.5}$	All Sources	At or Beyond Hull	15.7	55.0	30.4	0.10	0.1726	0.5
	No xxd [2]	At or Beyond Hull	15.7	55.0	21.1	0.10	0.2877	0.6
							Total Annual $PM_{2.5}$ Impact (μg/m³) >	*1.1*
Pollutant	Model Run	Impact Category	Max. Impact Location X(m)	Max. Impact Location Y(m)	Modeled 1-Hour Impact [1]	Persistence Factor	Emiss. Adjust [2]	Conc. (μg/m³)
PM_{10}	All Sources	At or Beyond Hull	15.7	55.0	30.9	0.10	0.1726	0.5
	No xxd [2]	At or Beyond Hull	15.7	55.0	21.6	0.10	0.2877	0.6
							Total Annual PM_{10} Impact (μg/m³) >	*1.2*
Pollutant	Model Run	Impact Category	Max. Impact Location X(m)	Max. Impact Location Y(m)	Modeled 1-Hour Impact [1]	Persistence Factor	Emiss. Adjust [2]	Conc. (μg/m³)
SO_2	All Sources	At or Beyond Hull	-2084.3	40.0	43.8	0.10	0.1726	0.8
	No xxd [2]	At or Beyond Hull	-2084.3	40.0	41.5	0.10	0.2877	1.2
							Total Annual SO_2 Impact (μg/m³) >	*1.9*

Assume 168 days per drilling season and 63 days of operation per season for HPU engines, air compressors, and resupply, ice management ships (NOx only) at each location.

1 Modeled 1-hour impacts for both sets of model runs (i.e., A) all sources, and B) no HPUs, compressors, cranes, or resupply and ice management ships (NOx only; also called "No_xxd" run) which results in the highest combined impact after emissions adjustments are made.

2 Annual emissions adjustment to modeled hourly emissions to account for duration of drilling season.

For ice management annual NOx compliance limit, ice management activity is assumed for 63 days per season. Thus, model run with all sources is adjusted by 63 days/365 days (i.e., 0.1726) and model run with no HPUs, compressors, cranes, or resupply and ice management ships is adjusted by (168 days - 63 days)/365 days (i.e., 0.2877). For all other pollutants, the ice management annual compliance limit is based on 168 days per season. Thus, model run with all sources is adjusted by 63 days/365 days (i.e., 0.1726) and model run with no HPUs, compressors, cranes, or resupply ships is adjusted by (168 days - 63 days)/365 days (i.e., 0.2877).

3 Assume that $NO_2 = NO_x * 0.75$.

Table 7-2b: Impact Scenarios Used to Define Screening Maximum Annual Impacts from All Sources – Alternate Operating Scenario No. 1

Pollutant	Model Run	Impact Category	Max. Impact Location X(m)	Max. Impact Location Y(m)	Modeled 1-Hour Impact [1]	Persistence Factor	Emiss. Adjust [2]	Conc. (μg/m³)
NO_2 [3]	All Sources	At or Beyond Hull	-2134.3	40.0	729.6	0.10	0.1726	9.4
	No xxd [2]	At or Beyond Hull	-2134.3	40.0	309.5	0.10	0.2877	6.7
							Total Annual NO_2 Impact (μg/m³) >	*16.1*
Pollutant	Model Run	Impact Category	Max. Impact Location X(m)	Max. Impact Location Y(m)	Modeled 1-Hour Impact [1]	Persistence Factor	Emiss. Adjust [2]	Conc. (μg/m³)
$PM_{2.5}$	All Sources	At or Beyond Hull	15.7	55.0	30.5	0.10	0.1726	0.5
	No xxd [2]	At or Beyond Hull	15.7	55.0	24.7	0.10	0.2877	0.7
							Total Annual $PM_{2.5}$ Impact (μg/m³) >	*1.2*
Pollutant	Model Run	Impact Category	Max. Impact Location X(m)	Max. Impact Location Y(m)	Modeled 1-Hour Impact [1]	Persistence Factor	Emiss. Adjust [2]	Conc. (μg/m³)
PM_{10}	All Sources	At or Beyond Hull	15.7	55.0	31.6	0.10	0.1726	0.5
	No xxd [2]	At or Beyond Hull	15.7	55.0	25.7	0.10	0.2877	0.7
							Total Annual PM_{10} Impact (μg/m³) >	*1.3*
Pollutant	Model Run	Impact Category	Max. Impact Location X(m)	Max. Impact Location Y(m)	Modeled 1-Hour Impact [1]	Persistence Factor	Emiss. Adjust [2]	Conc. (μg/m³)
SO_2	All Sources	At or Beyond Hull	-2084.3	40.0	44.1	0.10	0.1726	0.8
	No xxd [2]	At or Beyond Hull	-2084.3	40.0	41.8	0.10	0.2877	1.2
							Total Annual SO_2 Impact (μg/m³) >	*2.0*

Assume 168 days per drilling season and 63 days of operation per season for HPU engines, air compressors, and resupply, ice management ships (NOx only) at each location.

[1] Modeled 1-hour impacts for both sets of model runs (i.e., A) all sources, and B) no HPUs, compressors, cranes, or resupply and ice management ships (NOx only; also called "No_xxd" run) which results in the highest combined impact after emissions adjustments are made.

[2] Annual emissions adjustment to modeled hourly emissions to account for duration of drilling season.

For ice management annual NOx compliance limit, ice management activity is assumed for 63 days per season. Thus, model run with all sources is adjusted by 63 days/365 days (i.e., 0.1726) and model run with no HPUs, compressors, cranes, or resupply and ice management ships is adjusted by (168 days - 63 days)/365 days (i.e., 0.2877). For all other pollutants, the ice management annual compliance limit is based on 168 days per season. Thus, model run with all sources is adjusted by 63 days/365 days (i.e., 0.1726) and model run with no HPUs, compressors, cranes, or resupply ships is adjusted by (168 days - 63 days)/365 days (i.e., 0.2877).

[3] Assume that $NO_2 = NO_x * 0.75$.

Table 7-2c: Impact Scenarios Used to Define Screening Maximum Annual Impacts from All Sources – Alternate Operating Scenario No. 2

Pollutant	Model Run	Impact Category	Max. Impact Location X(m)	Max. Impact Location Y(m)	Modeled 1-Hour Impact [1]	Persistence Factor	Emmis. Adjust [2]	Conc. (μg/m³)
NO_2 [3]	All Sources	At or Beyond Hull	-2134.3	40.0	676.4	0.10	0.1726	8.8
	No xxd [2]	At or Beyond Hull	-2134.3	40.0	310.1	0.10	0.2877	6.7
							Total Annual NO_2 Impact (μg/m³) >	*15.4*
Pollutants	**Model Run**	**Impact Category**	**Max. Impact Location X(m)**	**Max. Impact Location Y(m)**	**Modeled 1-Hour Impact [1]**	**Persistence Factor**	**Emmis. Adjust [2]**	**Conc. (μg/m³)**
$PM_{2.5}$	All Sources	At or Beyond Hull	15.7	55.0	30.6	0.10	0.1726	0.5
	No xxd [2]	At or Beyond Hull	15.7	55.0	28.2	0.10	0.2877	0.8
							Total Annual $PM_{2.5}$ Impact (μg/m³) >	*1.3*
Pollutants	**Model Run**	**Impact Category**	**Max. Impact Location X(m)**	**Max. Impact Location Y(m)**	**Modeled 1-Hour Impact [1]**	**Persistence Factor**	**Emmis. Adjust [2]**	**Conc. (μg/m³)**
PM_{10}	All Sources	At or Beyond Hull	15.7	55.0	32.3	0.10	0.1726	0.6
	No xxd [2]	At or Beyond Hull	15.7	55.0	29.9	0.10	0.2877	0.9
							Total Annual PM_{10} Impact (μg/m³) >	*1.4*
Pollutant	**Model Run**	**Impact Category**	**Max. Impact Location X(m)**	**Max. Impact Location Y(m)**	**Modeled 1-Hour Impact [1]**	**Persistence Factor**	**Emmis. Adjust [2]**	**Conc. (μg/m³)**
SO_2	All Sources	At or Beyond Hull	-2084.3	40.0	44.4	0.10	0.1726	0.8
	No xxd [2]	At or Beyond Hull	-2084.3	40.0	42.1	0.10	0.2877	1.2
							Total Annual SO_2 Impact (μg/m³) >	*2.0*

Assume 168 days per drilling season and 63 days of operation per season for HPU engines, air compressors, and resupply, ice management ships (NOx only) at each location.

[1] Modeled 1-hour impacts for both sets of model runs (i.e., A) all sources, and B) no HPUs, compressors, cranes, or resupply and ice management ships (NOx only; also called "No_xxd" run) which results in the highest combined impact after emissions adjustments are made.

[2] Annual emissions adjustment to modeled hourly emissions to account for duration of drilling season.

For ice management annual NOx compliance limit, ice management activity is assumed for 63 days per season. Thus, model run with all sources is adjusted by 63 days/365 days (i.e., 0.1726) and model run with no HPUs, compressors, cranes, or resupply and ice management ships is adjusted by (168 days - 63 days)/365 days (i.e., 0.2877). For all other pollutants, the ice management annual compliance limit is based on 168 days per season. Thus, model run with all sources is adjusted by 63 days/365 days (i.e., 0.1726) and model run with no HPUs, compressors, cranes, or resupply ships is adjusted by (168 days - 63 days)/365 days (i.e., 0.2877).

[3] Assume that $NO_2 = NO_x * 0.75$.

Table 7-3a: Combined Screening Maximum Impacts from All Sources and Multiple Sequential Wells – Base Operating Scenario

Pollutant	Averaging Period	Max. Modeled 1-Hour Impact at or Beyond Hull	Persistence Factor	Emis. Adj. [1]	Concentration (μg/m³) Total No Background	Concentration (μg/m³) Background	Concentration (μg/m³) Total w/ Background	PSD Class II Increment (μg/m³)	Comply?	NAAQS (μg/m³)	Comply?	Sig. Monitoring Concentration (μg/m³)	Exceed?
NO_2 [2]	Annual	See Calculations in Table 7-2			18.2	2	20.2	25	Yes	100	Yes	14	Yes
$PM_{2.5}$	24-Hour	30.4	0.6	1	18.3	14	32.3	---	---	35	Yes	---	---
	Annual	See Calculations in Table 7-2			1.1	2	3.1	---	---	15	Yes	---	---
PM_{10}	24-Hour	31.0	0.6	1	18.6	114	132.6	30	Yes	150	Yes	10	Yes
	Annual	See Calculations in Table 7-2			1.2	10	10.8	17	Yes	50	Yes	---	---
SO_2	3-Hour	68.8	1.0	1	68.8	17	85.8	512	Yes	1,300	Yes	---	---
	24-Hour	44.2	0.6	1	26.5	10	36.5	91	Yes	365	Yes	13	Yes
	Annual	See Calculations in Table 7-2			1.9	0.5	1.9	20	Yes	80	Yes	---	---
CO	1-Hour	394.7	1.0	1	394.7	1050	1444.7	---	---	40,000	Yes	---	---
	8-Hour	394.7	0.9	1	355.2	535	890.2	---	---	10,000	Yes	575	No

Assume 168 days per drilling season and 63 days of operation per drilling season for HPU engines, air compressors, cranes, and resupply and ice management ships (NOx only).

[1] Annual emissions adjustment to modeled hourly emissions; assume 168 days per season and the HPUs, compressors, cranes and resupply and ice management ships (NOx only) are limited to 63 days per season. Ice management is limited to 168 days per season for $PM_{2.5}$, PM_{10}, SO_2, and CO. Short term emissions assume 24 hour per day operations.

[2] Assume that $NO_2 = NO_x * 0.75$.

Table 7-3b: Combined Screening Maximum Impacts from All Sources and Multiple Sequential Wells – Alternate Operating Scenario No. 1

Pollutant	Averaging Period	Max. Modeled 1-Hour Impact at or Beyond Hull	Persistence Factor	Emmis. Adj. [1]	Concentration (μg/m³) Total No Background	Background	Total w/ Background	PSD Class II Increment (μg/m³)	Comply?	NAAQS (μg/m³)	Comply?	Sig. Monitoring Concentration (μg/m³)	Exceed?
NO_2 [2]	Annual	See Calculations in Table 7-2			16.1	2	18.1	25	Yes	100	Yes	14	Yes
$PM_{2.5}$	24-Hour	30.5	0.6	1	18.3	14	32.3	---	---	35	Yes	---	---
	Annual	See Calculations in Table 7-2			1.2	2	3.2	---	---	15	Yes	---	---
PM_{10}	24-Hour	31.6	0.6	1	19.0	114	133.0	30	Yes	150	Yes	10	Yes
	Annual	See Calculations in Table 7-2			1.3	10	11.0	17	Yes	50	Yes	---	---
SO_2	3-Hour	68.8	1.0	1	68.8	17	85.8	512	Yes	1,300	Yes	---	---
	24-Hour	44.4	0.6	1	26.6	10	36.6	91	Yes	365	Yes	13	Yes
	Annual	See Calculations in Table 7-2			2.0	0.5	2.0	20	Yes	80	Yes	---	---
CO	1-Hour	394.7	1.0	1	394.7	1050	1444.7	---	---	40,000	Yes	---	---
	8-Hour	394.7	0.9	1	355.2	535	890.2	---	---	10,000	Yes	575	No

Assume 168 days per drilling season and 63 days of operation per drilling season for HPU engines, air compressors, cranes, and resupply and ice management ships (NOx only).

[1] Annual emissions adjustment to modeled hourly emissions; assume 168 days per season and the HPUs, compressors, cranes and resupply and ice management ships (NOx only) are limited to 63 days per season. Ice management is limited to 168 days per season for $PM_{2.5}$, PM_{10}, SO_2, and CO. Short term emissions assume 24 hour per day operations.

[2] Assume that $NO_2 = NO_x * 0.75$.

Table 7-3b: Combined Screening Maximum Impacts from All Sources and Multiple Sequential Wells – Alternate Operating Scenario No. 2

Pollutant	Averaging Period	Max. Modeled 1-Hour Impact at or Beyond Hull	Persistence Factor	Emmis. Adj. [1]	Concentration (μg/m³) Total No Background	Background	Total w/ Background	PSD Class II Increment (μg/m³)	Comply?	NAAQS (μg/m³)	Comply?	Sig. Monitoring Concentration (μg/m³)	Exceed?
NO_2 [2]	Annual	See Calculations in Table 7-2			15.4	2	17.4	25	Yes	100	Yes	14	Yes
$PM_{2.5}$	24-Hour	30.6	0.6	1	18.4	14	32.4	---	---	35	Yes	---	---
	Annual	See Calculations in Table 7-2			1.3	2	3.3	---	---	15	Yes	---	---
PM_{10}	24-Hour	32.3	0.6	1	19.4	114	133.4	30	Yes	150	Yes	10	Yes
	Annual	See Calculations in Table 7-2			1.4	10	11.1	17	Yes	50	Yes	---	---
SO_2	3-Hour	68.7	1.0	1	68.7	17	85.7	512	Yes	1,300	Yes	---	---
	24-Hour	44.6	0.6	1	26.8	10	36.8	91	Yes	365	Yes	13	Yes
	Annual	See Calculations in Table 7-2			2.0	0.5	2.0	20	Yes	80	Yes	---	---
CO	1-Hour	380.1	1.0	1	380.1	1050	1430.1	---	---	40,000	Yes	---	---
	8-Hour	380.1	0.9	1	342.1	535	877.1	---	---	10,000	Yes	575	No

Assume 168 days per drilling season and 63 days of operation per drilling season for HPU engines, air compressors, cranes, and resupply and ice management ships (NOx only).

[1] Annual emissions adjustment to modeled hourly emissions; assume 168 days per season and the HPUs, compressors, cranes and resupply and ice management ships (NOx only) are limited to 63 days per season. Ice management is limited to 168 days per season for $PM_{2.5}$, PM_{10}, SO_2, and CO. Short term emissions assume 24 hour per day operations.

[2] Assume that $NO_2 = NO_x * 0.75$.

Note that the worst-case impacts in Tables 7-3a, 7-3b, and 7-3c are also compared to the significant monitoring concentration thresholds. For any criteria pollutant that Shell proposes to emit in significant quantities, continuous monitoring data may be required as part of the air quality analysis. The permitting agency has discretionary authority to exempt a permit applicant from this data requirement if, 1) the highest modeled ambient impacts, or 2) the existing ambient pollutant concentrations are less than the significant monitoring concentration listed in Tables 7-3a, 7-3b, and 7-3c. Existing ambient background NO_2, PM_{10} and SO_2 concentrations and maximum modeled impacts exceed the significant monitoring thresholds. As part of the Wainwright monitoring program, these pollutants along with other criteria pollutants, including ozone, are being gathered for use in the ambient impact analysis. Note that ozone monitoring is required since the project has NO_x emissions (ozone precursor emissions) greater than 100 tons per year.

7.2 Source Contribution Analyses at Maximum Impact Location

EPA has asked that Shell provide a breakdown of individual source contributions. A source contribution analysis for 24-hour average $PM_{2.5}$ and annual average NO_2 is provided in Table 7-4. These pollutants and averaging times are presented since these are the highest impacts relative to the applicable ambient standards. Maximum impacts for annual NO_2 are driven by poorer dispersing engines (HPU engines and cementing units) on the *Discoverer* and the OSR and ice management fleet while the 24-hour $PM_{2.5}$ impacts are dominated by the incinerator on the *Discoverer*. The maximum impact locations and corresponding receptor coordinates are provided at the bottom of Table 7-4.

Table 7-4: Discoverer Source Contributions at the Screening Maximum Impact Locations

Source Description	Model Source ID	Impact Contribution (%)					
		Base Operating Scenario		Alt. Operating Scenario #1		Alt. Operating Scenario #2	
		Annual NO_2	24-Hour $PM_{2.5}$	Annual NO_2	24-Hour $PM_{2.5}$	Annual NO_2	24-Hour $PM_{2.5}$
Stack #1: 6 Main Drill Engines	MAINENGS	5	30	3	30	3	30
Stack #2: 3 Air Compressors	COMPENGS	3	4	5	4	5	4
Stack #3: 2 HPU Engines	HPPENGS	30	23	4	11	0	0
Stack #4: 3 Cementing Units	CEMENT	34	13	13	13	13	13
Stack #5a: Crane Engine (port)	CRANE_PT	0	0	0	0	0	0
Stack #5b: Crane Engine (stbd)	CRANE_SB	20	4	7	4	7	4
Stack #6: 2 Heat Boilers	HEATBOIL	7	16	5	16	5	15
Stack #8: 1 Incinerator	INCIN_D	0.3	7	0.2	19	0.4	30
Resupply Ship - Docked	KILABUK	0	0	2	0	2	0
Resupply Ship - Transit	RST_1-80	0	0	2	0	2	0
Oil Spill Response Ships	OILSPL01-40	0	0	46	0	48	0
Ice Management (Secondary)	BRK_B01-48	0.1	2	2	2	2	2
Ice Management (Primary)	BRK_A01-96	0.3	2	11	2	12	2
	Total >	100	100	100	100	100	100
X-Receptor Coordinate (m) >		15.8	15.8	-2134.3	15.8	-2134.3	15.8
Y-Receptor Coordinate (m) >		55.3	55.3	40.0	55.3	40.0	55.3
General Location >		Disco Hull	Disco Hull	OSR Area	Disco Hull	OSR Area	Disco Hull

7.3 Impacts from the Ice Management and Anchor Handler Fleet

EPA has asked that Shell provide a table showing the maximum concentration impacts from both the primary and the secondary ice management ships and its locations. As expected, if the impacts from all source operations show compliance with the ambient standards as shown in Table 7-3 above, then the impacts from each of the ice management ships individually will also be less than the ambient standards. The maximum impacts from the primary ice management fleet and secondary ice management fleet are provided below in Table 7-5 and 7-6, respectively, and impacts are well below the PSD increment and NAAQS thresholds.

Table 7-5: Maximum Impacts from Primary Ice Management Ship

Pollutant	Averaging Period	Coordinate of Max. Impact Receptor X (m)	Coordinate of Max. Impact Receptor Y (m)	Max. Modeled 1-Hr Impact (μg/m³)	Persistence Factor	Emission Adjustment [1]	Concentration (μg/m³) Max. Modeled Impact (μg/m³)	Concentration (μg/m³) Background	Concentration (μg/m³) Total No Background	Concentration (μg/m³) Total w/ Background	PSD Class II Increment [2] (μg/m³)	PSD Class II Increment [2] Comply?	NAAQS [3] (μg/m³)	NAAQS [3] Comply?
NO_2	Annual	4,800.0	-4,500.0	252.9	0.1	0.1726	3.3	2	3.3	5.3	25	Yes	100	Yes
$PM_{2.5}$	24-Hour	4,800.0	-4,500.0	9.6	0.6	1	5.8	14	5.8	19.8	---	---	35	Yes
	Annual	4,800.0	-4,500.0	9.6	0.1	0.4603	0.4	2	0.4	2.4	---	---	15	Yes
PM_{10}	24-Hour	4,800.0	-4,500.0	11.0	0.6	1	6.6	114	6.6	120.6	30	Yes	150	Yes
	Annual	4,800.0	-4,500.0	11.0	0.1	0.4603	0.5	10	0.5	10.2	17	Yes	50	Yes
SO_2	3-Hour	4,800.0	-4,500.0	9.5	1.0	1	9.5	17	9.5	26.5	512	Yes	1,300	Yes
	24-Hour	4,800.0	-4,500.0	9.5	0.6	1	5.7	10	5.7	15.7	91	Yes	365	Yes
	Annual	4,800.0	-4,500.0	9.5	0.1	0.4603	0.4	0.5	0.4	0.4	20	Yes	80	Yes
CO	1-Hour	4,800.0	-4,500.0	39.1	1.0	1	39.1	1050	39.1	1089.1	---	---	40,000	Yes
	8-Hour	4,800.0	-4,500.0	39.1	0.9	1	35.2	535	35.2	570.2	---	---	10,000	Yes

[1] For short-term impacts assume 24-hour day operations (adjustment = 1) for annual impacts assume 63 days per drilling season for NOx (adjustment = 63 days/365 days) and and 168 days per drilling season for $PM_{2.5}$, PM_{10}, and SO_2 (adjustment = 168 days/365 days).

[2] Impacts without background concentrations are compared to the PSD increments.

[3] Impacts including background concentrations are compared to the NAAQS.

Table 7-6: Maximum Impacts from Secondary Ice Management Ship

Pollutant	Averaging Period	Coordinate of Max. Impact Receptor		Max. Modeled 1-Hr Impact (μg/m³)	Persistence Factor	Emission Adjustment [1]	Concentration (μg/m³)				PSD Class II Increment [2]		NAAQS [3]	
		X (m)	Y (m)				Max. Modeled Impact (μg/m³)	Background	Total No Background	Total w/ Background	(μg/m³)	Comply?	(μg/m³)	Comply?
NO_2	Annual	1000.0	-2100.0	41.9	0.1	0.1726	0.5	2	0.5	2.5	25	Yes	100	Yes
$PM_{2.5}$	24-Hour	1000.0	-2100.0	5.2	0.6	1	3.1	14	3.1	17.1	---	---	35	Yes
	Annual	1000.0	-2100.0	5.2	0.1	0.4603	0.2	2	0.2	2.2	---	---	15	Yes
PM_{10}	24-Hour	1000.0	-2100.0	5.3	0.6	1	3.2	114	3.2	117.2	30	Yes	150	Yes
	Annual	1000.0	-2100.0	5.3	0.1	0.4603	0.2	10	0.2	9.9	17	Yes	50	Yes
SO_2	3-Hour	1000.0	-2100.0	18.5	0.9	1	18.5	17	18.5	35.5	512	Yes	1,300	Yes
	24-Hour	1000.0	-2100.0	18.5	0.6	1	11.1	10	11.1	21.1	91	Yes	365	Yes
	Annual	1000.0	-2100.0	18.5	0.1	0.4603	0.9	0.5	0.9	0.9	20	Yes	80	Yes
CO	1-Hour	1000.0	-2100.0	78.0	1.0	1	78.0	1050	78.0	1128.0	---	---	40,000	Yes
	8-Hour	1000.0	-2100.0	78.0	0.9	1	70.2	535	70.2	605.4	---	---	10,000	Yes

[1] For short-term impacts assume 24-hour day operations (adjustment = 1) for annual impacts assume 64 days per drilling season for NOx (adjustment = 63 days/365 days) and and 168 days per drilling season for $PM_{2.5}$, PM_{10}, and SO_2 (adjustment = 168 days/365 days).

[2] Impacts without background concentrations are compared to the PSD increments.

[3] Impacts including background concentrations are compared to the NAAQS.

7.4 Worst-Case Screening Impacts at Nearest Villages on Chukchi Coast

Based on Figure 1-1, the nearest coastal villages to the existing Shell leases are Wainwright and Point Lay, which are approximately 110 and 100 kilometers away from the nearest Shell leases, respectively. Worst-case impacts from the proposed project using the screening analysis are provided in Table 7-7 and are well below the NAAQS and PSD increments at these locations

Table 7-7: Worst-Case Screening Impacts at Nearest Villages on Chukchi Coast – Highest of Three Modeling Scenarios

Pollutant	Averaging Period	Concentration (μg/m³)					PSD Class II Increment [2] (μg/m³)	Comply?	NAAQS [3] (μg/m³)	Comply?	Shell Impact % NAAQS
		Max. Modeled [1]									
		Wainwright	Point Lay	Background	Total No Background	Total w/ Background					
NO_2	Annual	1.7	1.8	2	1.8	3.8	25	Yes	100	Yes	2
$PM_{2.5}$	24-Hour	2.6	2.7	14	2.7	16.7	---	---	35	Yes	8
	Annual	0.2	0.2	2	0.2	2.2	---	---	15	Yes	1
PM_{10}	24-Hour	2.8	3.0	114	3.0	117.0	30	Yes	150	Yes	2
	Annual	0.2	0.2	10	0.2	9.9	17	Yes	50	Yes	0.4
SO_2	3-Hour	7.3	7.8	17	7.8	24.8	512	Yes	1,300	Yes	1
	24-Hour	4.1	4.4	10	4.4	14.4	91	Yes	365	Yes	1
	Annual	0.3	0.3	0.5	0.3	0.8	20	Yes	80	Yes	0.4
CO	1-Hour	34.1	36.4	1050	36.4	1086.4	---	---	40,000	Yes	0.1
	8-Hour	30.7	32.8	535	32.8	567.8	---	---	10,000	Yes	0.3

[1] The nearest villages to Shell's Chukchi leases are Wainwright (~110 km away) and Point Lay (~100 km away).

[2] Total impact without background is compared to the PSD increments.

[3] Total impact with background is compared to the NAAQS.

Shell Gulf of Mexico Inc.
3601 C Street, Suite 1000
Anchorage, AK 99503

Shell Chukchi OCS Air Permit
EPA Region 10
1200 6th Ave. Ste. 900, AWT-107
Seattle, WA 98101

October 20, 2009

Re: Shell Gulf of Mexico Inc. Supplemental Comments on the August 2009 Proposed Discoverer / Chukchi OCS/PSD Permit to Construct

Dear EPA,

Shell Gulf of Mexico Inc. provides the enclosed supplemental comments on the above-referenced permit. These comments consist of (i) information supporting the use of the ISC PRIME dispersion model to demonstrate compliance with the ambient standards; (ii) a suggestion for possible future correction to the duration of the Discoverer's status as an OCS source; (iii) a discussion of the appropriate extent of regulation of contingent emergency emissions under the permit; and (iv) Shell's position regarding the appropriate PSD point of compliance.

References for the September 17, 2009 comments are provided as Attachment B to the enclosed comments, as required by EPA's comments instructions. Both of these documents are readily available on the internet.

We remain available to EPA to discuss or expand on any of these comments.

Sincerely,

Susan Childs

Enclosure

cc: *Lance Tolson*
Keith Craik
Nicole St Amand
Rick Fox
Mark Schindler – Octane LLC.
Rodger Steen – Air Sciences Inc.
Eric Hansen – Environ International
Jeffrey Walker - Minerals Management Service

Shell Gulf of Mexico Inc.
Supplemental Comments on the
August 2009 EPA Permit R10OCS/PSD-AK-2009-01
October 20, 2009

1.0 ADEQUACY OF THE IMPACT MODEL (ISC-PRIME)

Either of two levels of modeling sophistication (screening and refined modeling) may be used to demonstrate compliance with ambient standards and guidelines. The purpose of a screening modeling technique is to apply a simple and conservative screening procedure to determine whether a source poses a potential threat to air quality, thus eliminating the need for more detailed data collection and modeling for those sources that clearly will not cause or contribute to ambient concentrations in excess of either the National Ambient Air Quality Standards (NAAQS) or the allowable prevention of significant deterioration (PSD) concentration increments (Section 2.2 of EPA's *Guideline on Air Quality Models* in 40 CFR 51, Appendix W). At the screening level, a model is run using a predefined range of meteorological conditions to identify the condition which produces highest hourly concentration at the relevant point of impact in relation to the proposed source, regardless of how frequently that worst-case condition may actually occur. This ceiling concentration is then scaled by conservative persistence factors to estimate maximum concentrations at other time scales, such as 24-hour and annual averages. A large degree of conservatism is incorporated into screening modeling to provide assurance that maximum concentrations will not be underestimated. Because the impacts derived from a screening approach are conservative, the screening analysis is used when actual meteorological data are not available at a project site.

In a refined modeling analysis, actual meteorological data representative of the project location would be used to characterize the actual range of dispersion meteorology and thus more accurately estimate the project impact on all averaging times. Thus, screening model approaches are designed to produce higher concentration impacts than refined modeling approaches (Section 2.2 of EPA's *Guideline on Air Quality Models* in 40 CFR 51, Appendix W).

The ISC-PRIME model is a U.S. EPA-approved, alternative model (http://www.epa.gov/scram001/dispersion_alt.htm) which can be run with screening meteorological data. Currently, SCREEN3 (screening version of the ISC model) is the screening model in the Guideline on Air Quality Models.[1] However, SCREEN3 is limited to only one source and it only considers receptors directly downwind of a source. Alternatively, the ISC-PRIME model is available and is a multiple-source model, which offers a screening mode using the same meteorological data as SCREEN3. ISC-PRIME incorporates improved plume rise and building downwash algorithms (i.e., PRIME algorithms), resolves impacts in a three-dimensional receptor grid, and it allows for consideration of the actual spatial distribution of sources (rather than a single source like SCREEN3). Since this project involves multiple sources, some of which

[1] 40 CFR 51, Appendix W: Federal Register / Vol. 70, No. 216 / Wednesday, November 9, 2005 / Rules and Regulations, Pg. 68221.

are substantially affected by building wake effects, ISC-PRIME is more appropriate than SCREEN3. To insure conservatism of the predictions, the longer term impact estimates for ISC-PRIME were developed using upper bound persistence factors reported from the EPA's screening procedures guidance.[2] For example, the recommended 24-hour persistence factor to convert from hourly to 24-hour average concentrations is 0.4±0.2. For this analysis the upper bound value of 0.6 was used, effectively increasing the 24-hour impacts by 50 percent over those factors normally used in screening analyses.

In addition to this dispersion model conservatism, the emissions inputs to the model are set at maximum for all emission units, a scenario that will rarely if ever occur. Drilling projects need a high degree of flexibility to work with unknown drilling circumstances and it is rare that any of the emission units will operate at maximum rate for any significant length of time. Even if under some unknown and rare circumstance all were to operate simultaneously at maximum, it would be highly unlikely that this would occur simultaneously with lowest-dispersion meteorology (also a rare event) to combine and cause maximum impacts. Thus the impacts predicted by this screening analysis are likely to be well above actual maximum impacts from the project.

2.0 POTENTIAL CORRECTION TO DURATION OF STATUS AS OCS SOURCE

Shell supports the draft permit's regulation of the Discoverer as a portable source[3] and concurs with the permit's definition of the vessel as an "OCS Source" only when stationary and operational at a drilling location However, in the interests of safety and to be consistent with section 328 of the Clean Air Act, Shell may in the future request a technical correction to the anchoring criteria under which the vessel will be considered an OCS Source.

---

[2] EPA's Screening Procedures for Estimating the Air Quality Impact of Stationary Sources, Revised (EPA-454/R-92-019, October 1992) document.

[3] Shell notes, however, that neither a source impact analysis nor an analysis of ambient air quality appears to be legally required for issuance of the proposed portable major source permit. As a "portable" source under 40 CFR 52.21(i)(1)(viii) the Discoverer is, by definition, "temporary." 40 CFR 52.21(i)(1)(viii)(a). The requirements of, inter alia, paragraph 52.21(k) – "source impact analysis"—and paragraph 52.21 – "air quality analysis" -- do not apply to a major stationary source that is " temporary" and "would impact no Class I area and no area where an applicable increment is known to be violated." 40 CFR 52.21(i)(3). The Discoverer's emissions would not impact a Class I area or an area where an applicable increment is known to have already been violated. Thus, it appears that Shell was not legally required to model or analyze the air quality impacts of this "temporary" source. In addition, even if the Discoverer were not a "temporary" source, collection of background air quality data is not required for issuance of a PSD permit if (1) predicted concentrations attributable to the new source are less than the values in a list of Significant Monitoring Concentrations (SMCs); (2) existing concentrations in the area affected by the new source are less than the SMCs; or (3) there is no SMC for a pollutant, e.g., $PM_{2.5}$. 40 CFR 52.21(i)(5). At least one of these conditions is met for all criteria pollutants in the remote offshore area where the Discoverer will operate, as well as at any potentially impacted onshore location. Nevertheless, provided that EPA Region 10 issues the final permit with the changes that Shell requested in its comments dated September 17, 2009, Shell will not dispute EPA's requirement for a "source impact analysis" or "air quality analysis" in connection with this permit.

Currently the definition reads: "For the purpose of this permit, the Discoverer is an "OCS Source" during all times between placement of the first anchor on the seabed to removal of the last anchor from the seabed at a drill site."

The definition should have stated that the vessel is an OCS Source only after the anchoring process is complete, i.e., all anchors are emplaced and tensioned and the Discoverer is stabilized and ready to proceed with drilling activities. Similarly, the Discoverer should cease to be an OCS Source when the anchor removal process is commenced in preparation for moving the vessel, i.e., when the first anchor is removed. Shell will attempt to meet the requirement to shut down the Discoverer's propulsion engines during anchoring but if this proves to be unsafe in practice, Shell will at an appropriate time request that the definition be modified to make it clear that the Discoverer can be an "OCS Source" only when it is completely anchored to the seabed at a drill site, i.e., between (a) attachment to, placement and tensioning of the final anchor on the seabed and (b) disconnection from or removal of the first anchor from the seabed at a drill site. The rationale for this potential change and specific modifications to this aspect of the OCS source definition are described in detail in Attachment A to these comments.

3.0 CONTINGENT EMERGENCY EMISSIONS UNDER THE PERMIT

Section B.2.3 requires that "Any time spent drilling a relief well shall be included in the time recorded in Conditions B.2.2.3 and B.2.2.4", i.e. against the permit's seasonal limitation on OCS Source status of a total of 168 days in any rolling 12-month period. Shell explained in detail in its permit application detail why the odds against Shell needing to drill a relief well at any offshore drill site are on the order of 6000-to-1 (as Region 10 acknowledged last year)[4] and consequently why emissions from drilling a relief are not properly covered by the permit. Shell's analysis is consistent with MMS's prior conclusion, upheld by the Ninth Circuit, that such events are not reasonably foreseeable and thus are not appropriately addressed in the context of other environmental statutory requirements. *See Alaska Wilderness League et al. v. Kempthorne*, No. 07-71457 (9th Cir. Nov. 20, 2008), slip. op. at 15583-85, *vacated on other grounds* (holding risk of blowout was "merely speculative" and that analysis of risk and consequences of such an accident was not required in NEPA context).

Shell recognizes that EPA does not agree with its analysis of this issue and is prepared to accept the permit's inclusion of language under which the drilling of an emergency relief well would count against the seasonal limitation of 168 calendar days. Shell's acceptance of this condition

[4] In responding to comments on the Kulluk Permit application during 2008, Region 10 relied upon authoritative MMS studies to find that the possibility of a relief well being required would be less than 1 in 5,960. See Region 10 Response to Comments on Kulluk Minor Source Permit at 44-45. During the 1992-2006 period examined in the MMS study on OCS exploration well blowout rates – one study on which EPA relied – not a single relief well was required to be drilled to completion.

assumes that no further requirements are imposed in the final permit. Specifically, it would not be proper to add a requirement that Shell further limit its normal drilling activities to fewer than 168 days in every rolling 12-month period in anticipation of the 1-in-6000 chance that a relief well might become necessary during that period. It would be inappropriate and infeasible to reduce, in advance, the available number of operational days under a permit in order to hold time available for every potential contingent event, no matter how remote.

Shell notes that under 40 CFR. 52.21(a)(2)(iii): "No new major stationary source or major modification to which the requirements of paragraphs (j) through (r)(5) of this section apply shall begin actual construction without a permit that states that the major stationary source or major modification will meet those requirements." Under subsection (k), the permittee "shall demonstrate that allowable emission increases from the proposed source . . . , in combination with all other applicable emissions increases or reductions . . . . would not cause or contribute to air pollution in violation of (1) any national ambient air quality standard in any air quality control region; or (2) any applicable maximum allowable increase over the baseline concentration in any area." 40 CFR 52.21(k). Shell has more than adequately demonstrated compliance with this requirement given (i) the extreme remoteness of the possibility of a blowout; (ii) the even greater remoteness that a blowout would require a relief well; and (iii) the still greater remoteness that drilling a relief well would be required precisely at the end of the 168-day season and that operating beyond that season would be required. Shell has demonstrated that the chance that a relief well will ever be drilled at any location are 1 in 6,000, with the odds incalculably smaller still that such an emergency would cause an exceedance of the 168-day limitation.

In any PSD permit, some risk inevitably exists that the permittee may violate some provision due to foreseeable but highly improbable occurrences. If zero-risk of a permit violation is the pre-requisite, EPA could never issue any PSD permit. Here, undisputed factual information in the record confirms that this risk is extremely small and EPA has reasonably determined that Shell can meet this emissions limit with over 99.9 percent assurance. Thus, Shell has made the demonstration under subsection (k).

4.0 PSD COMPLIANCE POINT

Shell is aware that ConocoPhillips Alaska Inc. (CPAI) has formally requested from EPA's Office of Air Quality Planning and Standards a determination that, under Section 328 of the Clean Air Act and EPA's implementing regulations, a proposed source that is to be located seaward of the 25-mile federal-state boundary and which is subject to PSD review need only demonstrate that its emissions will not cause an exceedance of the applicable PSD increment at impacted on-shore locations and that neither "ambient air" nor any applicable air quality planning area extends

offshore to the drillship for purposes of PSD compliance. Shell agrees with CPAI's analysis (and believes a similar analysis would compel the same conclusion with regard to demonstration of compliance with NAAQS), but will accept the proposed permit with Shell's requested modifications, even though emissions limits under the permit are premised on PSD compliance adjacent to the Discoverer. However, if EPA makes the determination that CPAI requests, Shell will seek appropriate conforming changes to this permit at that time.

ATTACHMENT A

Basis for Potential Modification of OCS Source Definition

The Frontier Discoverer could be considered an OCS Source only when, at a minimum, it is fully anchored to the seabed and completely stabilized with its propulsion engines turned off. The Discoverer can become an OCS source at a given location only after the anchoring process is complete, i.e., all anchors are emplaced and tensioned and the Discoverer is stabilized and ready to proceed with drilling activities. This definition, rather than one under which the Discoverer is an OCS source when even one anchor is emplaced, is required by the definition of "OCS Source" in 40 CFR. 55.2:

> OCS source means any equipment, activity, or facility which:
>
> (1) Emits or has the potential to emit any air pollutant;
>
> (2) Is regulated or authorized under the Outer Continental Shelf Lands Act ("OCSLA") (43 U.S.C. § 1331 et seq.); and
>
> (3) Is located on the OCS or in or on waters above the OCS.
>
> This definition shall include vessels only when they are: . . . Permanently or temporarily attached to the seabed and erected thereon and used for the purpose of exploring, developing or producing resources therefrom, within the meaning of section 4(a)(1) of OCSLA.

The referenced section 4(a)(1) of OCSLA states:

> The Constitution and laws and civil and political jurisdiction of the United States are hereby extended to the subsoil and seabed of the outer Continental Shelf *and to all artificial islands, and all installations and other devices permanently or temporarily attached to the seabed, which may be erected thereon for the purpose of exploring for, developing, or producing resources therefrom,* or any such installation or other device (other than a ship or vessel) for the purpose of transporting such resources, to the same extent as if the outer Continental Shelf were an area of exclusive Federal jurisdiction located within a State.

43 U.S.C 1333(a)(1) (emphasis added). As interpreted by the federal courts, section 4(a)(1) covers "any artificial island, installation, or other device if (a) it is permanently or temporarily attached to the seabed of the OCS, and (b) it has been erected on the seabed of the OCS, and (c) its presence on the OCS is to explore for, develop, or produce resources from the OCS." *See, e.g., Diamond Offshore Company v. A&B Builders, Inc.*, 302 F.3d 531, 541 (5th Cir. 2002). Under this analysis, a jack-up rig that has been jacked-up on the OCS is within this definition, because it is literally both "attached" and "erected." *DeMette v. Falcon Drilling Co., Inc.*, 280 F.3d 492, 498 (5th Cir. 2002).

In *Diamond Offshore*, the Court of Appeals noted, in denying summary judgment to plaintiff (a welder injured by drilling mud on the *Ocean Concorde* submersible) who contended the vessel had become an OCSLA "situs" by the time he was injured, that:

> After the *Ocean Concorde* was towed to its ultimate location, it would then be anchored to the seabed. The evidence does not indicate whether [plaintiff] was welding . . . during towing or while the *Ocean Concorde* was attached to the seabed by its *anchor*s. . . . Since there is no evidence that the *Ocean Concorde* was connected to the ocean floor by its *anchors* or through its drilling mechanism, and there is no evidence of any other contact with the seabed, the second requirement that the *Ocean Concorde* was "erected" on the OCS at the time of [plaintiff's] alleged injury is clearly not satisfied.

302 F.3d at 541. Thus, it is clear from the Fifth Circuit's analysis that, when a drilling vessel requires multiple anchors in order to be able to "explore" for resources, the vessel does not become an OCS facility at least until all necessary anchors are in place. Indeed, the case further indicates that some "other contact" besides anchors (which "attach" the vessel to the seabed) would be a prerequisite to also being "erected" on the seabed (e.g., drilling equipment). This is consistent with OCSLA section 4(a)(1)'s requirement that a facility or installation be both "attached" and "erected" on the OCS before it is subject to the jurisdictional provisions of OCSLA.

The Discoverer is closely analogous to the submersible drilling vessel in *Diamond Offshore*. Shell cannot and will not begin the drilling process until the Discoverer is completely moored and its central turret system, around which the vessel rotates to face wind and ice, has been stabilized with 8 anchors. Similarly, when it is time to detach the Discoverer from the seabed at a drill site, Shell must cease all drilling activity and remove all physical connections through the drill stem to the seabed before the first anchor can be removed. To begin or continue drilling when the Discoverer is not fully stabilized would risk severe damage to the drill stem and the Discoverer, and jeopardize the safety of the crew.

In fact, even complete anchoring of the Discoverer does not make it an OCS source engaged in stationary activities. As the EAB has observed, "'Only the vessel's **stationary source activities** may be regulated . . . .'" *In re: Shell Offshore, Inc., Kulluk Drilling Unit and Frontier Discoverer Drilling Unit*, OCS Appeal Nos. 07-01 & 07-02 slip op. at 24 (EAB, Sept. 14, 2007) (quoting from EPA's Notice of Proposed Rulemaking: Outer Continental Shelf Air Regulations, 56 Fed. Reg. 63,774, 63, 777 (Dec. 5, 1991) (emphasis added)). Further, EAB has concluded that EPA's regulations require that an attached facility actually be *in use* for drilling or other exploration before a vessel becomes a stationary source: "'Vessels . . . will be included in the definition of "OCS source" when they are "permanently or temporarily attached to the seabed" **and are being used** "for the purpose of exploring, developing or producing resources therefrom."'" *Id*.

(emphasis added). As a corollary, "'Section 328 does not provide authority to EPA to regulate the emissions from engines being used for propulsion.'" *Id*. Until all of the Discoverer's anchors are emplaced and tensioned and its main engines are shut down, the vessel's main engines continue to provide propulsive power to position the vessel during the anchoring process. Thus, operation of the propulsion engines clearly is not a stationary source activity and should not be subject to regulation under this permit.[1]

Shell intends to attempt to safely anchor the Discoverer without using the vessel's propulsion engines, as the permit requires. If this proves infeasible, Shell will seek revisions in Sections B.2 and B.3 along the following lines:

2. Duration of Exploration Operations. The permittee shall only conduct exploration drilling operations in the Chukchi Sea between July 1 and December 31 each year (referred to hereafter as the "drilling season").

2.1 During any rolling 12-month period, the permittee shall not operate the Discoverer as an OCS Source in excess of 168 calendar days. Each partial day shall be counted as a calendar day.

2.2 For each drill site at which the Discoverer operates, the permittee shall record the following:

2.2.1 The location of each drill site, using a modern global positioning system to determine the location. Location shall be recorded by providing coordinates in the following formats:

2.2.1.1 Latitude and longitude, and

2.2.1.2 Universal Transverse Mercator grid system.

2.2.2 The lease block within the Chukchi Sea lease sale 193 where the drill site is located;

2.2.3 The date and hour that the Discoverer was completely anchored to the seabed;

2.2.4 The date and hour that the Discoverer was no longer completely anchored to the seabed.

. . . .

---

[1] Congress intended that a drilling vessel become subject to regulation under OCSLA only when it is connected to the seabed by drilling equipment or other exploration-related structures. As the House Select Committee on the Outer Continental Shelf observed in regard to the 1978 amendments, OCSLA was intended to "be applicable to all activities on drilling ships, semi-submersible drilling rigs, and other watercraft when they are connected to the seabed by drillstring, pipes or other appurtenances." House Committee Report No. 95-590, 95th Cong., 2d Sess. at 128 (1978), reprinted in 1978 U.S.C.C.A.N 1450, 1534 (emphasis added). Anchors that merely stabilize a floating drillship do not constitute the erecting of drilling equipment or appurtenances at the location and do not, by themselves, make a drillship an OCS source. Indeed, while the 1978 amendments to section 4(a)(1) of the original OCS Act of 1953 substituted "installations and devices permanently or temporarily attached to the seabed" for the term "fixed structures" for purposes of OCSLA jurisdiction, the conference committee report made clear that "The intent of the managers in amending section 4(a)of the 1953 OCS Act is technical and perfecting and is meant to restate and clarify and not change existing law." House Conference Report No. 95-1474, 95th Cong., 2d Sess. at 80, reprinted in 1978 U.S.C.C.A.N. 1674, 1679. Thus, Congress had in mind attachments that are similar to fixed structures – not mere anchor lines -- as triggers for the OCSLA jurisdiction that, in turn, creates EPA's regulatory authority under section 328 of the Clean Air Act.

3. **Drilling Season Notification.** Each drilling season, the permittee shall report to EPA via facsimile the information below, within 3 days of occurrence:

3.1 The date and hour that the Discoverer was completely anchored to the seabed for the first time during that drilling season; and

3.2 The date and hour that the Discoverer was no longer completely anchored to the seabed for the last time during that drilling season.

ATTACHMENT B

Additional References for September 17, 2009 Comments

Optimized Method 202 Sampling Train to Minimize the Biases Associated with Method 202 Measurement of Condensable Particulate Matter Emissions

John Richards, Tom Holder, and David Goshaw
Air Control Techniques, P.C.
Cary, North Carolina

ABSTRACT

Numerous papers have addressed the significant positive biases associated with the use of EPA Method 202 for the measurement of condensable particulate matter ("CPM") emissions. These biases are due, in part, to the oxidation of soluble gases inadvertently captured in the cold impinger solutions used in Method 202 sampling trains. In some cases, the artifact CPM formed from gases in the impingers can be up to ten times the concentration of filterable particulate matter in the sample gas stream. The CPM emissions measured by Method 202 can significantly over-state the actual emissions of CPM to the atmosphere.

In response to the bias problems, the U.S. Environmental Protection Agency ("U.S. EPA") has been actively developing an air dilution sampling train that can be used to measure CPM without the use of water-filled impingers. This air dilution method is available as EPA Conditional Test Method 039 ("CTM 039"). Unfortunately, this method requires extremely large bulky sampling equipment, is expensive to operate, cannot distinguish between filterable and condensable $PM_{2.5}$ emissions, and is vulnerable to significant wall losses of CPM. The authors are not aware of any uses of CTM 039 outside of limited EPA research test programs.

Until CTM 039 or alterative air dilution techniques are available for practical commercial use, there is a need to minimize the Method 202 biases associated with the measurement of CPM. Air Control Techniques, P.C. has developed an optimized Method 202 sampling train that utilizes off-the-shelf components and operates without the need for water filled impingers. The only water present in the impingers is sample gas stream moisture condensing on the cold surfaces of the dry impingers. The absorption and subsequent aqueous phase reactions of dissolved gases are substantially reduced in this optimized Method 202 sampling train. A filter is used after the dry impingers to achieve high efficiency capture the condensed CPM particles formed in the optimized sampling train. This paper provides data comparing the sulfate artifact levels in a conventional Method 202 sampling train with the optimized Method 202 sampling train. The results of tests indicate that the optimized Method 202 sampling train reduces sulfate artifact levels to 15% of the levels in an un-purged conventional train and to 33% of the levels in a purged conventional train. The results of these laboratory tests are very similar to artifact formation rates calculated based on sulfur dioxide solubility and a 4% per hour oxidation rate in solution.

1. INTRODUCTION

The primary emissions of CPM from stationary sources are of increasing concern because the U.S. EPA believes that these emissions could be significant contributors to ambient $PM_{2.5}$ particulate matter in some geographical areas. U.S. EPA regional offices have been encouraging

state and local agencies to request that stationary sources conduct CPM emission tests to compile the data necessary to evaluate future control strategies for the $PM_{2.5}$ National Ambient Air Quality Standards. At the present time, U.S. EPA Method 202 is the only promulgated method available to measure primary CPM emissions. This method is usually conducted with U.S. EPA method 5 for the determination of filterable particulate matter ("FPM") emissions. The combined sampling train is termed Method 5/202.

FPM are defined as particulate matter that exists at a temperature set by the air emission testing procedures which for Method 5 is 248ºF ± 25ºF. Vapor phase materials (e.g. high molecular weight organic compounds and sulfuric acid) sometimes present in the sample gas streams of combustion sources passes through the sampling train filters and are not collected. EPA has argued that the condensable vapors not collected in a filterable particulate matter test method can form particles once the stack emissions cool in the atmosphere. Accordingly, in 1991 EPA promulgated Method 202 to be used as a stand alone method or in combination with a FPM measurement method such as Method 5. Method 202 involves the analyses of the total organic and total inorganic material trapped in the water filled impingers in the "back half" of the Method 5 sampling train. The impingers capture all vapor phase materials that condense at a temperature below the Method 5 filter temperature and above the impinger exit temperature (<68ºF).

2. METHOD 202 MEASUREMENT BIAS

Air emission testing experience since the promulgation of Method 202 in 1991 has demonstrated that it is inappropriate to use water-filled impingers to cool the sample gas stream for CPM combustion sources having SO_2, NO_2[1], and/or soluble organic compound[2] emissions. These gaseous contaminants can partially absorb in the impingers and chemically oxidize to form material counted as CPM in Method 202. These artifact reaction products are not related to the primary emission of CPM from the source.

The potentially significant problems affecting Method 202 accuracy include the following:

1. Dissolution of sulfur dioxide and nitrogen oxides into water with subsequent oxidation to form sulfates and nitrates in the impingers
2. Dissolution of soluble organic compounds into water
3. Penetration of submicrometer sized condensed particles through the impingers of the Method 202 sampling train
4. Gas phase homogeneous reactions between ammonia and hydrogen chloride and/or between ammonia and sulfur dioxide in the cold, water-filled impingers

Of these four sources of bias, the absorption and reaction of sulfur dioxide is most common. Since Method 202 was promulgated, there has been considerable concern that absorption of soluble sulfur dioxide and nitrogen dioxide and subsequent reactions of these dissolved gases occur within the aqueous phase in the impingers (references 1, 2, 3, 4 and 8). These reactions are

[1] NO_2 is one of the two oxidized nitrogen oxides included as NOx. NO_2 is usually present at levels of 2% to 10% of the total NOx concentration.
[2] Soluble organic compounds include alcohols, aldehydes, ketones, and organic acids.

important because these gases are considerably more soluble in cold liquids than in warm liquids. The 32°F to 68°F temperatures of the liquid in the impingers provide an ideal environment for the collection of soluble inorganic gases.

Atmospheric reactivity studies summarized in the final edition of the Particulate Matter Air Quality Criteria Document (reference 5) indicate that there are a number of reaction mechanisms for converting dissolved sulfur dioxide (sulfite ion) to sulfuric acid. These studies indicate that the conversion rate of sulfur dioxide in water droplets can be "several times" higher than the 1% to 3% per hour conversion rate observed for dry, gas phase reactions. Based on this general relationship, the aqueous phase conversion rates relevant to water filled impingers are estimated to be 2% to 6% per hour.

> "Chemical reactions of SO_2 and NOx within plumes are an important source of H^+, SO_4^{-2}, and NO_3^{-1}. These conversions can occur by gas-phase and aqueous-phase mechanisms. For the conversion of SO_2 to H_2SO_4, the gas-phase rate in such plumes during summer midday conditions in the eastern United Stated typically varies between 1 and 3% per hour, but in the cleaner western United States rarely exceeds 1% hr^{-1}."
>
> U.S. EPA, Particulate Matter Criteria Document (October 2004), Page 3-63. (Concerning dry, gas phase reactions)

> "The contribution of aqueous-phase chemistry to particle formation in point-source plumes is highly variable, depending on the availability of the aqueous phase (wetted aerosols, clouds, fog, and light rain)... The in-cloud conversions of SO_2 to SO_4^{-2} can be several times larger than the gas-phase rates give above."
>
> U.S. EPA, Particulate Matter Criteria Document (October 2004), Page 3-63. (Concerning aqueous phase reactions similar to those that could occur in Method 202 impingers)

The 2% to 6% per hour secondary particulate (sulfate) formation rates suggested by EPA (reference 5) are very high. Similar SO_2 oxidation rates in the impingers of Method 202 can create significant quantities of sulfate material.

Method 202 includes provisions to address the SO_2 absorption and reaction issue. EPA recommends that the impinger solutions from the Method 202 sampling train be purged with clean nitrogen to strip out the dissolved SO_2 from the solution. Unfortunately, there are two factors that limit the effectiveness of this approach: (1) SO_2 oxidation reactions begin immediately during the test run and prior to the start of the purge step and (2) purging is often not complete.

Obviously, a post test run nitrogen purge has no impact on the quantity of SO_2 that reacts to form sulfates in solution during the one hour Method 202 test run and the one to two hours after the test run that are often needed before purging is started. At a reaction rate of 2% to 6% per hour, there is considerable time prior to purging for the dissolved SO_2 to react to form sulfates that are subsequently falsely counted as "condensable particulate matter" emissions from the source.

It is also apparent that purging is more difficult than anticipated in Method 202. Tests conducted by Corio (reference 3) indicated that, in many cases, the one-hour purge time listed in Method

202 is not adequate to eliminate the gaseous material (e.g. sulfur dioxide) that has absorbed into solution. Similar problems have been observed by McCain and Williamson (references 2, 6, and 7). Purge efficiencies in the mid-80% to low 90%s have been measured in these tests. The remaining 10% to 20% of the dissolved sulfur dioxide (and other dissolved gases) is converted to condensable particulate matter in the samples in the hours to days that pass until the samples are analyzed. This can significantly affect the accuracy the Method 202 test results.

To evaluate the extent of the error in Method 202 caused by SO_2 absorption and reaction, the quantity of SO_2 absorbed in the Method 202 impingers has been calculated based on Henry's Law constants for a pure water - SO_2 solution. The results are summarized in Table 1 for a typical Method 202 sampling run involving the capture of 30 DSCF of sample gas and a 3 hour period after the test run before the initiation of the Method 202 allowed purge step. The results are also based on a SO_2 oxidation rate of 4% per hour.

The hourly and annual artifact CPM "emissions" are based on a total stack gas flow rate of 50,000 DSCFM and 7,500 operating hours per year. The stack gas flow rate is representative of a small-fossil fuel-fired boiler, a moderately sized kiln, or a moderately sized furnace.

Table 1. Calculated Absorption and Oxidation of Sulfur Dioxide in the Impinger Solutions (pure water-sulfur dioxide solution)

SO_2, ppm	N_2 Purge Efficiency, %	Sulfate Artifact @ 4% per hour formation rate, grains/DSCF	Sulfate Artifact, Equivalent @ 50,000 DSCFM, lbs/hour	Sulfate Artifact, Equivalent @ 7,500 hours per year, tons per year
200	No Purge	0.0157	6.7	25.2
	80	0.0055	2.3	8.8
	90	0.0039	1.7	6.2
	100	0.0023	1.0	3.7
500	No Purge	0.0449	19.3	72.2
	80	0.0136	5.8	21.9
	90	0.0097	4.2	15.6
	100	0.0058	2.5	9.3

In laboratory tests conducted by Air Control Techniques, P.C. in 2001 using clean impinger water, condensable particulate matter levels exceeding 0.014 grains/DSCF were found even though the Method 202 laboratory tests were conducted with a sample gas stream blended with Protocol 1 high quality particulate-free gaseous sulfur dioxide, nitrogen oxides, and ammonia (reference 4). There was no condensable particulate matter in the blended gas stream entering the Method 202 sampling train. These measured "CPM" levels observed in these tests confirmed that significant positive biases that can exist with Method 202 techniques when used on stationary sources with sulfur dioxide concentrations in the range of 200 to 500 ppm.

The laboratory tests conducted in 2001 did not include carbon dioxide or water vapor in the sample gas stream. Furthermore, the previous tests did not include any modifications to the

conventional Method 202 sampling train to minimize the positive bias related to sulfur dioxide absorption and oxidation. To further evaluate means to minimize the positive bias in Method 202, additional tests were conducted in 2005. The experimental techniques and the characteristics of the optimized Method 202 sampling train are summarized in Section 3. The results of the evaluation program are summarized in Section 4.

3. EVALUATION PROCEDURES

3.1 Conventional Method 202 Sampling Train.

A conventional Method 202 sampling train was set-up in the Air Control Techniques, P.C. laboratory. A sample gas stream was blended from (1) oxygen in nitrogen and carbon dioxide in nitrogen gas cylinders, and (2) a sulfur dioxide in nitrogen gas cylinder. The oxygen and carbon dioxide carrier gases were bubbled through a set of impingers operating at 160ºF to 180ºF to provide water vapor levels of 1.45% to 3.36% in the blended sample gas stream. This gas stream was then heated to 290ºF to 310ºF. The concentrations of sulfur dioxide, carbon dioxide, and oxygen were monitored continuously at the outlet of the Method 202 impingers using EPA Methods 3A and 6C. The concentrations were also measured at the inlet to the Method 202 sampling train prior to the test run. The water vapor concentrations were measured using EPA Method 4.

Each Method 202 test run in the lab was conducted for one hour at a sample gas flow rate of approximately 0.62 DSCFM. The oxygen concentrations ranged from 6.4% to 17.0% by volume and the carbon dioxide concentrations ranged from 0% to 16.7%. The sulfur dioxide concentrations at the inlet to the Method 202 sampling train ranged from 130 ppm to 210 ppm. The probe and the filter in the Method 5 “front half” was operated at 250ºF to 270ºF, within the required Method 5 temperature range. The impinger outlet temperatures ranged from 42ºF to 55ºF, well within the required Method 202 operating range.

Following each test run, the sampling train was recovered using Method 202 procedures. However, since this test program was limited to the absorption and oxidation of sulfur dioxide, the methylene chloride rinse step was omitted.

3.2 Optimized Method 202 Sampling Train

The optimized Method 202 sampling train shown in Figure 1 has been designed to achieve adequate temperature reduction with minimal contact between the SO_2 containing gas stream and the liquid. A filter located after two “dry” knockout impingers is the primary location for the capture of condensed particulate matter. The optimized Method 202 sampling train is rinsed using water and methylene chloride to collect any condensed material on glassware surfaces.

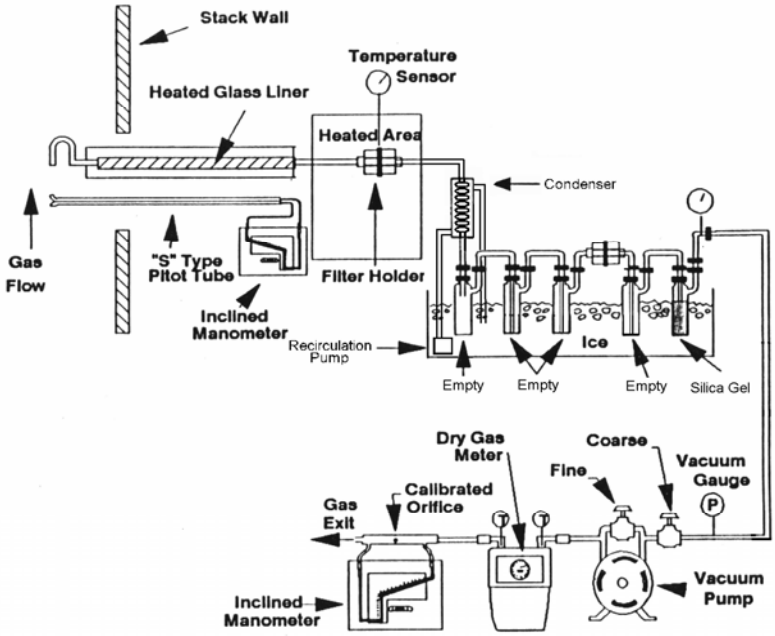

Figure 1. Optimized Method 202 sampling train

The gas stream entering the optimized Method 202 sampling train is first contacted using an indirect condenser that uses cold water recirculated from the impinger case. This decreases the gas temperature to below 68ºF. The only contact between gaseous SO_2 and condensed water is with the sample gas stream moisture that condenses on the surfaces of the indirect heater exchanger.

A large knockout impinger is used following the indirect heat exchanger to quickly separate the sample gas stream from the condensed water. The sample gas stream then passes through two empty Greenberg-Smith impingers to ensure complete droplet knockout and CPM formation prior to the filter. A 47mm filter is used to filter out the condensed particulate matter. The filter is combined with the knockout impinger solution and the rinses of the entire sampling train. All of the condensed material is extracted from this combined sample and is analyzed in accordance with standard Method 202 analytical procedures.

The optimized Method 202 sampling train was used with the same simulated stack gas stream used with the conventional Method 202 sampling train. The sulfur dioxide, carbon dioxide, and oxygen concentrations were monitored continuously at the outlet of the last impinger prior to the silica gel. The performance of the optimized Method 202 sampling train was compared with the test results with the conventional Method 202 sampling train.

4. TEST RESULTS

The sulfur dioxide, carbon dioxide, and oxygen concentration trends during the test run with the conventional Method 202 train is illustrated in Figure 2. It is apparent that high efficiency removal of sulfur dioxide occurs in the impinger solutions for the first ten to fifteen minutes of

the test run. After saturation of the impinger solutions, the SO_2 concentrations at the outlet of the Method 202 sampling train (prior to the silica gel) reached the inlet concentration level of 180 ppm.

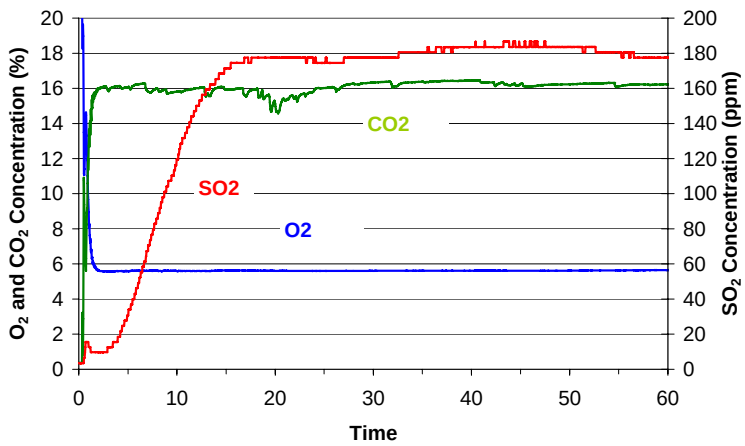

Figure 2. Concentration trends in a conventional Method 202 sampling train

The impact of carbon dioxide on the absorption and reaction of sulfur dioxide in the sampling train was evaluated by eliminating the carbon dioxide source. The concentration trends in Figure 3 for a conventional Method 202 sampling train without the presence of carbon dioxide are very similar to the results with carbon dioxide. In this test run, the inlet sulfur dioxide concentration was 130 ppm.

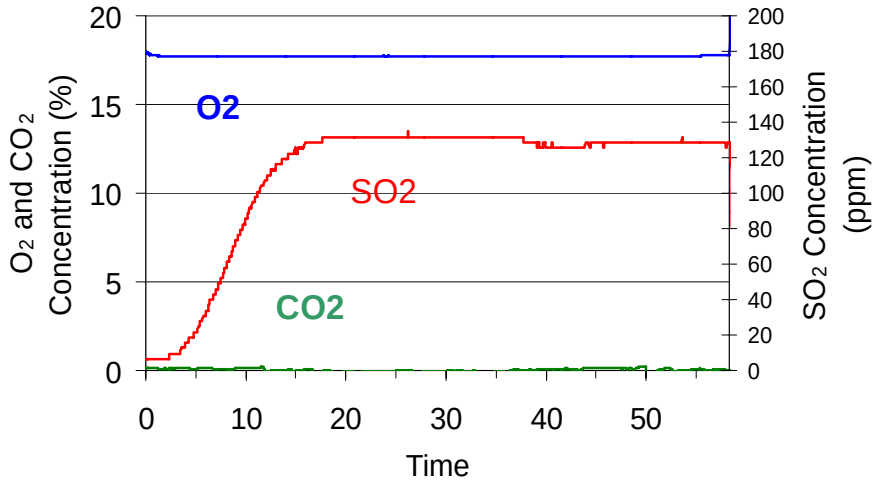

Figure 3. Concentration trends in a conventional Method 202 sampling train without carbon dioxide in the sample gas stream

It is apparent that the elimination of carbon dioxide did not strongly affect the rate at which the sampling train outlet SO_2 concentration ramped back to the inlet concentration level.

The results of the test on the optimized Method 202 sampling train are illustrated in Figure 4. It is apparent that SO_2 absorption is significantly reduced with this optimized arrangement. The SO_2 outlet concentration almost immediately increases to the inlet concentration value of 210 ppm.

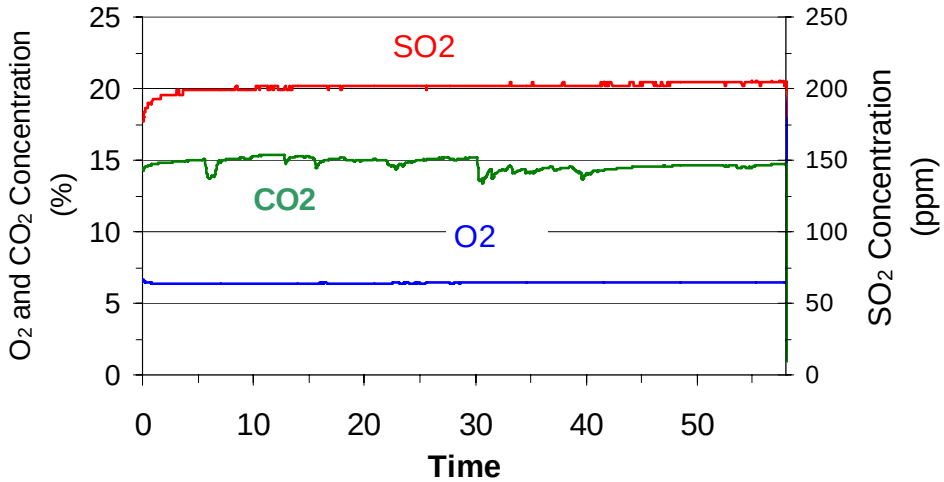

Figure 4. Concentration trends in an optimized Method 202 sampling train

Due to the substantial reduction in the capture of sulfur dioxide, the vulnerability to positive bias related to aqueous phase oxidation reactions is minimized. The differences in the sulfate concentration levels in the Method 202 samples confirm that the positive bias with the optimized train is reduced well below the levels observed in the conventional Method 202 sampling train.

Table 2. Method 202 Test Results

Run	Sampling Train	Test Conditions	Artifact Sulfate, milligrams	Artifact Sulfate, grains/DSCF
1	Conventional	No purge	38.0	0.016
2	Conventional	Purge	15.0	0.006
3	Conventional	Purge, No CO_2	13.8	0.006
4	Optimized	No purge	5.2	0.002

The results with the optimized Method 202 sampling train indicate the artifact levels are 15% of the levels in the conventional Method 202 sampling train with no purge. The optimized Method 202 sampling train had artifact levels that were only 33% of the levels measured in a conventional Method 202 train with a 1-hour nitrogen purge.

5. CONCLUSIONS

Laboratory tests conducted using a conventional Method 202 sampling train on a simulated combustion source gas stream confirmed that this method is subject to a substantial positive bias due to sulfur dioxide absorption and aqueous phase oxidation. This bias can be substantially reduced by modifying the conventional sampling train. Instead of water-filled impingers, Air Control Techniques, P.C. recommends that the sample gas stream first pass through a water-cooled indirect condenser, a "dry" knock-out impinger, and two empty impingers in an ice-bath. This provides sufficient heat exchange to cool the sample gas stream below 68ºF and to condense all vapor phase material to form CPM. The condensed particulate matter is captured on a high efficiency filter following the third impinger.

A comparison of the performance of the conventional and optimized Method 202 sampling trains indicates that the optimized unit has artifact formation levels of approximately 15% of an un-purged conventional train and 33% of a purged conventional train. The beneficial impact of the optimized sampling train will be even greater in actual gas streams that have additional gaseous species that can increase sulfur dioxide aqueous phase reaction rates.

REFERENCES

1. Filadelfia, E.J., and M. D. Mc Daniel. "Evaluation of False Positive Interference's Associated with the Use of EPA Method 202." Paper 96-RA-109.04 Presented at the 89th Annual Meeting and Exhibition of the Air & Waste Management Association, June 23-28, 1996.

2. McCain, J.D., and A.D. Williamson. "Development of Methodology to Measure Condensable Emissions from Stationary Sources." Air and Waste Management Journal, 1989.

3. Corio, L.A., and J. Sherwell. "In-Stack Condensable Particulate Matter Measurements and Issues." Journal of the Air & Waste Management Association, Volume 50, February 2000.

4. Holder, T.E., D.G. Goshaw, and J.R Richards. "Artifact Formation in Method 202 Sampling Trains Used to Measure Condensable Particulate Matter Emissions from Portland Cement Kilns." Paper 451 Presented at the Air & Waste Management Association Meeting, Orlando, Florida, June 23-28, 2001.

5. U.S. EPA. Air Quality Criteria for Particulate Matter, EPA/600/P-99/002aF. October 2004

6. McCain, J.D., A.D. Williamson, and T.E. Ward. "Development of Methodology to Measure Condensable Emissions from Stationary Sources." Air & Waste Management Association. Publication Data unknown.

7. Williamson, A.D., R.S. Martin, and D. B. Harris. "Measurement of Condensable Vapor Contribution to PM_{10} Emissions." Paper 85-14.4, Presented at the 78th Annual Meeting of the Air Pollution Control Association, Detroit, Michigan, June 16-21, 1985.

8. South Coast Air Quality Management District. "Method 5.1, Determination of Particulate Matter Emissions from Stationary Sources Using a Wet Impinger Train." Office of Operations, Technical Services Division, Mary 1989.

9. Andracsek, R. and D. Gaige. "Particulate Emissions – Combustion Source Emission Dependent on Test Method." Available at www.epa.gov/ttn/chief/conferences/ei14/session 9.

ASME International

AN ASME REPORT CRTD Vol. 60

Final Report

Reference Method Accuracy and Precision (ReMAP): Phase 1

Precision of Manual Stack Emission Measurements

Prepared by:

W. Steven Lanier
GE Energy and Environmental Research Corporation

Charles D. Hendrix
Statistical Consultant

under the auspices of:
American Society of Mechanical Engineers
Research Committee on Industrial and Municipal Waste

February 2001

Reference Method Accuracy and Precision (ReMAP Phase I) An Assessment of the Precision of EP A Manual Stack Emission Measurements

Executive Summary

This report documents results from the first phase of a study co-sponsored by the American Society of Mechanical Engineers (ASME) to assess the accuracy and precision of manual test methods adopted by the US Environmental Protection Agency (EP A) for determining the stack concentration of selected air pollutants. The program is entitled Reference Method Accuracy and Precision and is referred to by the acronym ReMAP. The Phase I effort addresses the precision of the selected measurement methods. The formal Purpose Statement for the program is:

> *"To determine the precision of pollutant emission measurements based on analysis of available simultaneous -sample test data which were generated using EPA Manual Reference Test Methods* 5 *and 5i (Particulate Matter),* 23 *(Dioxin and Furan),* 26 *(HCl),* 29 *(multi-metals), 101a and 101b (mercury) and* 108 *(arsenic) at a number of stationary air sources. "*

As used in the ReMAP program, precision is defined as random error that inadvertently enters the measurement process. This error may enter at any stage of the measurement process including sample collection, sample recovery, or sample analysis. The impact of such errors is that measurement results deviate from the true stack concentration. Because these errors occur randomly, data from repeated application of any manual test method (to a hypothetical stack with a chosen average concentration of the selected pollutant) should result in a bell shaped frequency distribution. This distribution is centered about the chosen stack concentration but data are expected indicating measured concentrations both above and below the chosen stack value.

Precision of a measurement method is indicated by the horizontal spread of the bell curve. One common way to characterize the bell curve shape is to determine the estimated standard deviation (s) of the distribution. Alternately, the bell distribution also describes the range of measurement results anticipated from repeated application of the measurement method at the given concentration. Based upon the best estimate of the standard deviation, it is a simple matter to calculate other indicators of data quality that have direct practical significance. The ReMAP program selected two additional, directly derived parameters to characterize precision of manual methods:

1. The anticipated range for 99 out of 100 future single measurements. If the measurement method is repeatedly applied to a stack with a given concentration, this precision metric defines the upper and lower concentration bounds for 99% of individual measurements.

2. The anticipated range for 99 out of 100 future triplicate measurements. Since most environmental regulations define the reportable stack concentration as the average of three repeated test runs, this metric defines the anticipated range of results in triplicate (3 single time series) measurements due to random error in the measurement process.

For each of these precision metrics it is important to note the inherent assumption that the measurement method is being applied to a hypothetical stack with an average pollutant concentration that does not vary with time. In real-world applications, single and triplicate measurement results will indicate variation from both random errors and systematic errors (bias) in the measurement process as well as temporal variation in facility operation.

As noted, the primary objective of the ReMAP program is to characterize the bell shaped curve for each measurement method by first estimating the standard deviation s. The other two precision metrics are directly calculated from s. Specifically 99 out of 100 single measurements will fall within ± 2.54 s of the true concentration. The anticipated range for the average of repeated measurements comes progressively closer to the true concentration. More precisely, the anticipated range varies inversely with the square root of the number of measurements. Thus, if s is the standard deviation of anticipated single measurements, the anticipated range for 99 out of 100 future triplicate measurements will fall within ± 2.54 s /v 3 of the true concentration.

A central tenet of the ReMAP program is to determine how the precision of manual measurement methods varies with the concentration of the pollutant being measured. A constant measurement standard deviation might occur if the primary source of random error is an analytical process. A simple example might be the repeatability with which a technician can measure the weight gain on a particulate filter. The capabilities of the weighing scale do not significantly vary with the particulate weight gain. However, the magnitude of random errors associated with extraction and recovery of the sample from the stack might be expected to vary in proportion to stack concentration.

The technical effort of the ReMAP program is to estimate the standard deviation of selected EPA Measurement Reference Methods as a function of average stack concentration. ReMAP is not intended to validate any of the Reference Methods addressed herein nor is it to be used as a substitute for Method 301.

The concentration of pollutants released from industrial facilities must be assumed to vary with time. Accordingly, results from typical, single-train stack tests are of limited value for determination of the precision of a measurement method. Instead, estimation of method precision must be based on data from special tests where multiple sampling trains are used to simultaneously determine the stack pollutant concentration. Such multi-train tests minimize the impact of temporal and spatial (where probes are co-located) variations on the data and the results can be used to estimate the standard deviation of the particular measurement at the specific stack concentration.

The ReMAP program performed a careful assessment of the statistical analysis procedures required to estimate the precision of Manual Reference Methods using multi-train sampling data (see Appendix). To assure the quality of data used in the statistical analysis, an extensive effort was expended in gathering data from the original sources and carefully evaluating them to assure that consistent data reduction procedures were used.

Conceptually, the ReMAP statistical analysis procedure is straightforward. First, data from a multi-train test run are averaged to provide an estimate of the average concentration for the run (C_i). The standard deviation for the test run (S_i) is also calculated. Clearly, a calculated standard deviation from a single test using a dual sampling probe provides a relatively poor estimate of the true standard deviation of the method (s) at the true concentration (µ). However, after accounting for various biases, a significant array of data from multi-train tests should provide a reasonable basis for estimating the true standard deviation as a function of concentration. The ReMAP procedure is to assume that the standard deviation varies with concentration according to a power function relationship and then to fit the data to that equation using regression analysis.

Results from the regression analysis represent the best estimate available on the standard deviation of the measurement method at any given concentration. However, the ReMAP analysis procedure also provides for calculation of confidence intervals on the regression. These

confidence intervals define the upper and lower bounds for the regression line at the 95% confidence level. Based on the regression line and the confidence intervals, the various precision metrics can be determined for each Method as a function of concentration. Results from the analyses are summarized below.

EP A Method 5 and 5i for Particulate Matter - Front Half Only

Method 5 was one of the first EP A Reference Methods developed for stack sampling. There is a relatively large body of multi-train data indicating that the relative standard deviation (RSD) has minimal variation with concentration. Over a broad concentration range, RSD is predicted to remain between 5 and 11 %. There are certain data comparability concerns associated with the Method 5 precision analysis. However, assuming that the Method is applied to a stack with a particulate matter concentration less than 150 mg/dscm, the best available estimate is that RSD will be below 10%. Moreover, the influence of random error in the measurement process should result in the average of triplicate measurements deviating from the true average concentration by no more than about ±14.7% (±2.54*10%/v3).

Method 5i was specifically developed for application to stacks with particulate concentrations below 50 mg/dscm. The Method itself requires dual-train sampling and provides an upper limit on the allowable deviation between the simultaneous measurements. Thus the available data had been pre screened to eliminate test results with large standard deviation (i.e., > about 14% RSD). This prescreening, coupled with the relatively small concentration range for the data, resulted in the ReMAP analysis finding no statistically significant variation of standard deviation with concentration.

Based on a pooled analysis, the characteristic standard deviation for Method 5i was found to be 1.43 mg/dscm. Based on this best estimate of standard deviation. the ReMAP analysis indicates that 99 out of l00 Method Si single measurements should deviate from the true concentration by no more than ± 3.68 mg/dscm. For triplicate measurements 99 out of l00 Method 5i data results should deviate from the true concentration by no more than ± 2.12 mg/dscm.

Method 23 for Dioxin and Furan

Data collected with Method 23 are used to report dioxin and furan emissions as either the total mass of tetra through octa chlorinated dioxin plus furan or as the toxic equivalent emission, adjusting the mass of each congener according to its toxicity relative to 2,3,7,8 TCDD. The individual 2,3,7,8 substituted dioxin and furan congeners in tetra through octa homologues are weighted by specific factors ranging from zero to 1.0 to determine the toxic equivalent of 2,3,7,8 TCDD.

The precision of Method 23 was assessed when data were reported in both forms. Even though the same data were used for both assessments, the ReMAP results suggest that the measurement precision varies according to how the data are reported. This implies that the random error associated with the sum of all the congener masses is different than random errors associated with the sum of weighted masses.

The ReMAP assessment of Method 23 was performed using a limited database of multi-train emissions data. For application of Method 23 for determination of total PCDD/PCDF mass, the ReMAP analysis found that RSD varied between about 6.3% and 20% for stack concentrations in the range of 2 to 27 ng/dscm. The following table presents the anticipated upper and lower bounds for 99 out of l00 Method 23 measurements as a function of the true stack concentration.

Table ES-1. Anticipated Range of Measurement Results Due to Random Error in Application of Method 23 for Total PCDD/PCDF Determination.

True Stack Concentration ng/dscm	99 out of 100 Single Measurements		99 out of 100 Triplicate Measurements	
	Lower Limit	Upper Limit	Lower Limit	Upper Limit
2	0.97	3.03	1.40	2.60
6	4/09	7.91	4.90	7.10
10	7.46	12.5	8.53	11.5
14	10.9	17.1	12.2	15.8
18	14.5	21.5	16.6	20.0
22	18.1	25.9	19.7	24.3
26	21.7	30.3	23.5	28.5

As noted, indicated measurement precision is different when Method 23 is used to determine concentration on a toxic equivalence basis. Specifically, the regression analysis found no statistically significant variation of standard deviation with concentration. Pooled analysis indicates that the best estimate of standard deviation is 0.027 ng ITEQ/dscm when the emission concentration is in the range of 0.02 to 9.9 ng ITEQ/dscm. This further indicates that 99 out of l00 future single measurements should fall with ±0.069 ng ITEQ/dscm of the true concentration and 99 out of l00 triplicate measurements should fall within ±0.04 ng ITEQ/dscm of the true concentration.

The absolute value of anticipated range for future Method 23 measurements (as ITEQ) are quite small in absolute terms but they are on the same order as regulatory emission limits being considered in some regions. As indicated above, the best estimate of standard deviation is 0.027 ng ITEQ/dscm. However, at 95% confidence, the standard deviation may be as large as 0.037 ng ITEQ/dscm and the potential range for 99 out of l00 future measurements might deviate from the true concentration by as much as ±0.095 ng ITEQ/dscm. Relying upon a single measurement has the potential to create problematic findings. If emission limits were set at 0.095 ng ITEQ/dscm, to be assured of compliance at the 95% confidence level, measurement results could not exceed zero. Similarly, measurement results must be above 0.19 ng ITEQ/dscm to establish, with 95% confidence that the true stack concentration exceeded the emission limit.

Most regulations and permit limits establish compliance based on averaging results from triplicate measurements. The anticipated range for 99 out of l00 future triplicate measurements is reduced, relative to single measurements, by v3. Thus, compliance with an emission limit of 0.095 ng ITEQ/dscm is assured (at the 95% confidence level) when the triplicate average is at or below 0.04 ng ITEQ/dscm. Similarly, at 95% confidence, exceedence of the 0.095 ng ITEQ/dscm limit is assured when the three run average is above 0.15 ng ITEQ/dscm.

Method 26 for Hydrochloric Acid

ReMAP analysis of available data for Method 26 for HCI indicated that RSD is typically in the range of 5% to 10%. RSD does increase when the method is applied to stacks with very low

concentration. Table ES-2 summarized the anticipated upper and lower bounds for 99 out of 100 Method 26 measurements as a function of true stack HCI concentration.

Table ES-2. Anticipated Range of HCI Measurement Results Due to Random Error in Application of Method 26.

True Stack HCl Concentration mg/dscm	99 out of 100 Single Measurements		99 out of 100 Triplicate Measurements	
	Lower Limit	Upper Limit	Lower Limit	Upper Limit
1	0.65	1.35	0.80	1.20
5	3.72	6.28	4.26	5.74
10	7.76	12.2	8.71	11.3
20	16.1	23.9	17.7	22.3
50	41.9	58.1	45.3	54.7
100	85.8	114.2	91.8	108.2

Methods 29, l0la and l0lb for Total Mercury

Several measurement methods have been developed for measurement of total emission concentration and for mercury speciation. The ReMAP analysis took all available multi-train mercury data collected using Methods 29, 101a and 101b but only used the data for total mercury concentration. The data analysis indicates that over the concentration range of 50 to 783 µg/dscm, the measurement method RSD varied from 9.6 to 12.4%. As concentration drops from 50 to 5 µg/dscm, the RSD is expected to rise from 12.4% to 15.4%. Table ES-3 summarizes the anticipated upper and lower bounds for 99 out of l00 mercury measurements using Methods 29 and 101 as a function of true stack total mercury concentration.

Table ES-3. Anticipated Range of Total Hg Measurement Results Due to Random Error in Application of Methods 29, 101a and 101b.

True Stack Hg Concentration µg/dscm	99 out of 100 Single Measurements		99 out of 100 Triplicate Measurements	
	Lower Limit	Upper Limit	Lower Limit	Upper Limit
4	2.19	5.81	2.96	5.04
10	5.96	14.0	7.70	12.3
25	16.0	34.0	19.8	30.2
50	33.4	66.6	40.4	59.6
75	51.3	98.7	61.7	88.7
100	69.5	130.5	82.4	117.6

Method 29 for Multi-Metals

Method 29 is also used for measurement of several other metal emissions. Precision analysis was completed for six other metals including antimony, arsenic, beryllium, cadmium, chromium, and

lead. With the exception of cadmium, the analysis indicates that these metals behave similarly with respect to measurement method precision. A composite analysis was performed for the five similarly behaving metals and the results, 0 indicate that use of Method 29 provides an RSD that varies between 13 and 18% when the individual metal concentrations are between about 20 and 100 µg/dscm. Table ES-4 summarizes the anticipated upper and lower bounds for 99 out of 100 Sb, As, Be, Cr, and Pb measurements using Methods 29 as a function of true stack total metal concentration.

As regards cadmium measurements using Method 29, the analysis indicates that standard deviation is a weaker function of concentration, at least at higher concentration ranges. The best estimate of RSD is 9.1 % when cadmium concentration is 80 µg/dscm and 18.7 % when the concentration drops to 20 µg/dscm. However, at 5 µg/dscm, predicted RSD is 38.6% and at 1.4 µg/dscm RSD is predicted to exceed 75%.
ES-6

Table ES-4. Anticipated Range of Sb, As, Be, Cr, and Pb Measurement Results Due to Random Error in Application of Methods 29 (Composite Analysis).

True Stack Sb, As, Be, Cr, or PB Concentration µg/dscm	99 out of 100 Single Measurements		99 out of 100 Triplicate Measurements	
	Lower Limit	Upper Limit	Lower Limit	Upper Limit
5	2.16	7.84	3.36	6.64
20	11.0	29.0	14.8	25.2
40	24.0	56.0	30.8	49.2
60	37.6	82.4	47.1	72.9
80	51.5	108.5	63.6	96.4
100	65.7	134.3	80.2	119.8

From: Mark Schindler <mark.octane@me.com>
Date: November 13, 2009 8:31:26 PM EST
To: Hastings.Janis@epamail.epa.gov
Cc: Susan Childs <Susan.Childs@shell.com>, Shell - Lance Tolson <Lance.Tolson@shell.com>
Subject: Potential Chukchi Re-proposal

Hi Jan,

Hope you are feeling better. Here is the conceptual plan for the potential re-proposal of the Chukchi PSD permit. We look forward to discussing this plan next Tuesday November 17, 2009. If you have any questions over the weekend, pls. give me a call. Otherwise, I will touch base with you on Monday.

Mark

November 13, 2009

Conceptual Plan: Potential Re-Proposal of Shell Chukchi Draft PSD Permit

Part I below is a list of changes that Shell will seek in any potentially re-proposed permit. All these changes (except the last item) are addressed in Shell's September 17, 2009 comments. Part II identifies two possible technical modifications for discussion with Region 10. Part III briefly outlines types of additional information Shell will submit prior to re-proposal. Part IV is a proposed time-line for re-proposal of the draft permit for public comment.

I. Shell's requested essential changes to any re-proposed permit

- Identify the Tor Viking or Hull 247 as Icebreaker #2. Impose emissions limits specific to each vessel to ensure compliance with NAAQS/PSD (see Conditions N.3, N.4 of Oct.8 red-lined proposed permit text)

- Modify Nanuq daily fuel limitation from 1547 gallons per day to 47,000 kWhr/day to reflect actual vessel usage (see Condition Q.2)

- Allow two hours of operation of the emergency generator per month to meet USCG requirements (see Conditions E.1; E.2)

- Tighter restrictions on waste throughput limits for the Discoverer incinerator (Unit FD-23) in coordination with HPU operations (see Condition K.6.2)

- Load monitoring for compliance assurance in place of the fuel monitoring for generator engines (see Conditions C, N, O, Q)

- Eliminate unnecessary exclusion zone for icebreakers and Nanuq in proximity to Discoverer (see Conditions N.6, O.6, Q.3)

- Eliminate infeasible requirement for CEM for ammonia emissions (see Condition C.7.6.4)

- Stack testing for icebreaker and anchor handler propulsion engines should be at realistic >30% capacity, rather than at 20% (see Conditions N.9, O.11)

- Stack testing requirements should be reduced for the new Tier 3 engines, the cranes, the cementing and logging units, the boilers and utility generators (see Conditions F.5, G.7, H.7, I.7, J.5)

- Incinerator scale accuracy requirement should be 5 lb., not infeasible .05 lb. (see Condition K.8.1.2)

- Redefine source to exclude regulation of Discoverer when not completely anchored (addressed in Shell comments dated September 17, but change not requested at that time) (see definition of "OCS Source")

II. Technical modifications to permit that may warrant discussion

- Required fuel consumption accuracy for fuel meters of 2% may not be feasible (see Conditions Q.7.1, O.12.1, N.10

- Revise description of re-supply vessel for more realistic balance between allowable horsepower ratings of utility generators vs. propulsion engines, without increasing allowable emissions (see Condition L.1)

III. Additional data and information to be provided by Shell to support re-proposal

- Supplemental technical basis for the permit changes listed above
- Updates to the application BACT analysis
- Updated monitoring data
- Specific responses to certain issues raised by public comments

IV. Proposed Schedule

- Nov. 13: Shell submits conceptual plan for Shell legal and factual submissions to Region 10 in support of potential re-proposal, including a proposed initial timeline for potential re-proposal of the draft permit for public comment
- Nov. 17: Region 10 and Shell meet to agree upon content and plan for potential re-proposal
- Nov. 23: If agreed. Shell submits draft re-proposed permit and supporting factual and legal information
- Nov. 30: If agreed, Region 10 and Shell meet to clarify information submitted by Shell and to reach agreement on requested permit changes for re-proposal
- Dec. 10: If agreed, Region 10 issues revised draft permit and begins a not-to-exceed 30-day public comment period
- Jan. 24: Final permit issuance.

From: Kirk Winges
Sent: Wednesday, November 18, 2009 12:26 PM
To: Nair.Pat@epamail.epa.gov; Wong.Herman@epamail.epa.gov
Cc: Susan Childs; Eric Hansen; Mark Schindler
Subject: Kilabuck

I just wanted to clear up any confusion from our meeting yesterday concerning what was assumed for the Jim Kilabuck when attached to the Disco in the modeling for Chukchi and Beaufort.

The model runs for Chukchi and Beaufort were the same. Pat is correct that only one generator was assumed to be operating at 100% load for 12 hours per day for the peak 24-hour emissions. That was used for the 24-hour modeling for PM10, PM2.5 and SO2. However, for the 1-hour modeling for CO and the 3-hour modeling for SO2, both generators were assumed to be running at 100% load for the 1- or 3-hour period.

Kirk Winges | Principal Consultant
ENVIRON International Corporation
19020 33rd Avenue W, Suite 310
Lynnwood, WA 98036
V: 425.412.1813 | F: 425.412.1840

This message contains information that may be confidential, privileged or otherwise protected by law from disclosure. It is intended for the exclusive use of the Addressee(s). Unless you are the addressee or authorized agent of the addressee, you may not review, copy, distribute or disclose to anyone the message or any information contained within. If you have received this message in error, please contact the sender by electronic reply to email@environcorp.com and immediately delete all copies of the message.

-----Original Message-----
From: Kirk Winges
Sent: Thursday, November 19, 2009 3:42 PM
To: Nair.Pat@epamail.epa.gov
Subject: RE: Scale Idea

Hi Pat:

I think that is probably good. So what we would end up with is a relaxation of the requirement to be within 0.05 lb to 0.5 lb. The compliance on this would be based on the manufacture of the scale specifications, right?

Kirk

Kirk Winges | Principal Consultant
ENVIRON International Corporation

19020 33rd Avenue W, Suite 310
Lynnwood, WA 98036
V: 425.412.1813| F: 425.412.1840

Shell Exploration & Production

November 23, 2009

Ms. Janis Hastings
Associate Director
U.S. Environmental Protection Agency Region 10
1200 Sixth Avenue
Seattle, Washington 98101

Re: Shell Preconstruction PSD Permit Application, Chukchi Sea, Alaska - Supplemental Application Support Materials in Response to November 17, 2009 Coordination and Consultation Meeting with Region 10

Dear Jan:

Thank you again for providing time on November 17, 2009 to discuss your potential re-proposal of the captioned permit. As promised, we are hereby submitting responses to Mr. Pat Nair's questions, understandings regarding Shell's requested essential changes to any re-proposed permit, and other information relevant to your consideration of re-proposal. Today's submittal complies with the schedule proposed by Shell on November 13 and 17. We look forward to substantive discussions and other potential supplemental materials submissions between today and November 30, 2009, which is our next milestone to clarify information submitted by Shell and to reach agreement on requested permit changes for a re-proposed permit.

Please contact me at (907) 646-7112 or e-mail: susan.childs@shell.com if you have questions or comments.

Sincerely,

Susan Childs

Susan Childs
Regulatory Affairs Manager, Alaska Venture

Attachments

Cc: Pat Nair, R10
Herman Wong, R10
Dave Bray, R10
Paul Boys, R10
Chris Hall, R10
Jeff Walker, MMS-Alaska Region
Lance Tolson, Shell
Keith Craik, Shell
Rodger Steen, Air Sciences Inc.
Mark Schindler, Octane LLC
Kirk Winges, Environ
Eric Hansen, Environ

November 23, 2009
Shell Preconstruction Permit Application for Frontier Discoverer Drillship in Chukchi Sea, Alaska, beyond the 25-mile Alaska Seaward Boundary: Supplemental Application Support Materials Responding to R10 Pat Nair's Email and Discussion on November 17, 2009 in Seattle, Washington

To assist EPA R10 in its consideration of a potential re-proposal of the Shell Chukchi permit, Shell has discussed with EPA a number of clarifications and additional information that may be helpful to R10's consideration for potential re-proposal of the permit. This information falls into two main categories:

- Information to clarify and support the requested changes to the draft permit that Shell made during the permit comment period, and
- Information to assist R10 in responding to the public comments received.

This document is intended to provide both of those elements to R10, but in the following three (3) sections.

In Section I. we first address the items listed by Shell as essential changes to any re-proposed permit. These changes were addressed in our Conceptual Plan: Potential Re-Proposal of Shell Chukchi Draft PSD Permit submitted to you November 13, 2009. We discussed these essential modifications in our November 17, 2009 meeting with R10 and it is our understanding that some of these requests were acceptable to R10 based on information R10 already has, but others required further clarification.

Pat Nair provided to Kirk Winges on November 17, 2009 a list of 6 items of information needed to support the requested changes. We will list all of Shell's requested changes here, but only provide responses to those changes where Mr. Nair has requested additional clarification.

In Section II, we discuss two (2) technical modifications to the permit that may warrant discussions. These modifications were also included in our November 13 Conceptual Plan

In Section III, we discuss information needed to assist R10 with comment responses.

Updated monitoring data will be submitted at a later date under separate cover.

I. Shell's requested changes to any re-proposed permit

Shell requested technical changes to the permit on September 17, 2009 early in the public comment period, and followed up with submittal of an October 8, 2009

‘tracked changes” version of the permit highlighting how and where the technical changes would be reflected in the draft permit. The public comment period was extended so that the public would have a chance to view this supplemental request by Shell. These suggested changes were again discussed at length with R10 on November 17, 2009 in Seattle, and they are listed below:

1. **Identify the Tor Viking or Hull 247 as Icebreaker #2. Impose emissions limits specific to each vessel to ensure compliance with NAAQS/PSD (see Conditions N.3, N.4 of Oct.8 red-lined proposed permit text)**

   It is Shell’s understanding that EPA’s only additional information needed to address this issue was discussed by Pat Nair in his request No. 1 of his 6 items. Mr. Nair’s request is repeated here directly from his email to Mr. Winges:

   bullet point #1 - Tor Viking emission factors. I understand MaK emission factors may not be obtainable from either MaK or Viking. In this case, Shell will be making a case for use of alternative emissions data.

Shell Response: The Tor Viking icebreaker is described in Attachment A. The Tor Viking engines were manufactured by Caterpillar/Mak, the European affiliate of Caterpillar. There are four propulsion engines on the Tor Viking, two 6-cylinder M32C engines and two 8-cylinder M32C engines. Attachment B provides technical data for these engines. Environ has made a concerted effort to obtain particulate emissions data from Caterpillar/Mak for the Tor Viking engines. We were able to determine that these engines were manufactured in 2000. They were subsequently retrofitted with selective catalytic reduction NOx control equipment. These are 4-stroke engines and have the capability to burn a variety of oil types, but for the current project, Shell has committed to use low sulfur diesel as the only fuel. Fuel consumption ranges from 178 to 179 grams per kilowatt-hour (g/kWh) (Attachment B). Generator efficiency is 96% (Attachment B).

For the 6-cylinder engines (6M32C):

Engine Power: 2880 kW (note: this is engine power, not generator power)
At 80% load: (2880)(0.8) = 2304 kW
Fuel based on 100% power: (2880)(179) = 515,520 g/hr = 1,136.5 lb/hr
Fuel based on 80% power: (2304)(179) = 412,416 g/hr = 909.2 lb/hr
Fuel density: 7.076 lb/gal
Fuel consumption at 100% power: (1,136.5)/(7.076) = 160.6 gal/hr
Fuel consumption at 80% power: (909.2)/(7.076) = 128.5 gal/hr

For the 8-cylinder engines (8M32C):

Engine Power: 3840 kW (note: this is engine power, not generator power)
At 80% load: (3840)(0.8) = 3072 kW
Fuel based on 100% power: (3840)(179) = 687,360 g/hr = 1,515.3 lb/hr
Fuel based on 80% power: (3072)(179) = 549,888 g/hr = 1,212.3 lb/hr
Fuel density: 7.076 lb/gal
Fuel consumption at 100% power: (1,515.3)/(7.076) = 214.2 gal/hr
Fuel consumption at 80% power: (1,212.3)/(7.076) = 171.3 gal/hr

Emissions tests for NOx have been conducted and were provided to R10 in January of 2007 as part of the permit application for the Kulluk (R10OCS-AK-07-01, Appx B, page 38 or 53). Attachment C provides a copy of an additional test of the actual Mak engines on the Tor Viking for NOx emissions (with lower NOx emissions). Shell has not yet been able to obtain any particulate emission test results for these or similar Mak engines, though Environ is working to obtain any available data from the owners of the Tor Viking. Because it is not yet known whether such data are available, and because time is of the essence, Shell is proposing an alternative conservative approach. Shell will provide test data if and as they become available, but Shell will not seek to modify this alternative approach even if, as expected, the data would justify doing so.

In the May 2009 submission of information on the anchor handler, Air Sciences used a widely quoted emission factor from Corbett and Koehler of 1.92 g/kWh or 0.451 lb/MMBtu. This emission factor was used by agreement with EPA between Rodger Steen of Air Sciences and Pat Nair of EPA. This factor was used because the specific vessel to be used for the anchor handler duties was uncertain. The intent, therefore, was to provide a conservative factor representing a wide range of possible engine types and sizes. However, to limit possible high emissions from the anchor handler at the time, Air Sciences proposed an ORR to limit emissions of PM10 and PM2.5 to 48 and 42.2 lb/hr, respectively. These had the effect of limiting the anchor handler emission factor from 0.451 lb/MMBtu to 0.249 lb/MMBtu for PM10 and 0.220 lb/MMBtu for PM2.5, assuming the propulsion engines on the anchor handler were running at 80% load.

In September 2009, when Air Sciences submitted additional information to support and propose changes to the permit application, the decision was reached to commit to using the Tor Viking in 2010 and either the Tor Viking or Shell's new Hull 247 ship in future years. These ships were selected in part because they are newer vessels with cleaner engines, including SCR to control NOx emissions. At that time, Air Sciences also revised the emission factor for both PM10 and PM2.5 on the Tor Viking to use the AP-42 emission factor of 0.0573 lb/MMBtu. For the Hull 247 engine, the Tier IV emission specification of 0.059 lb/MMBtu was used. When conducting the modeling for compliance, on a pollutant-by-pollutant basis, Shell selected the vessel with the higher emissions

for the model runs. In some cases this was the Tor Viking, but for PM10 and PM2.5, the Hull 247 emissions were higher due to greater engine power than the Tor Viking. In addition emission computations were made assuming 100% of engine power, not the 80% assumption that had been used in the previous submission. Thus the actual propulsion engine emissions actually modeled were 13.23 lb/hr of PM10 or PM2.5, whereas the emissions for the Tor Viking were computed to be only 7.08 lb/hr for PM10 or PM2.5. [If the previous emission factors from the May 2009 submission had been used for the Tor Viking, it would have had higher computed emission rates of 24.63 lb/hr for PM10 at 80% power. PM2.5 emissions would have been 21.76 lb/hr.]

The emission factor submitted in September 2009, though lower than the emission factor used in the May 2009 submission, is reasonable and accurate for the permit application for the following reasons:

- No AP-42 emission factor was actually modeled. Only the Tier IV emissions for the Hull 247 vessel were modeled and it had effective emissions that were almost twice as high as the emissions that would have been modeled for the Tor Viking with the AP-42 emission factor.
- The Hull 247 emissions reflected 100% load, not the 80% load that is more likely for these vessels when operating in the ice breaking mode.
- The AP-42 emission factor is a recognized and published emission factor and can be used for permitting purposes when no other emission factor is available that is considered more accurate, which is the case here.
- The Corbett and Koehler emission factor that was previously used is based on larger vessels, running at slow speeds, burning higher sulfur fuel. See, for example, Attachment D, which is a compilation of information pertaining to the Corbett and Koehler emission factors. Tables 4 and 5 from a Colorado State training course (http://vista.cira.colostate.edu/docs/WRAP/Emissions/OffshoreEmissions.doc) on marine emissions, show emission rates for these vessels dropped dramatically to 0.72 g/kWh when running at medium speed, while still on residual oil. The Corbett and Koehler paper itself (also in Attachment D) shows in paragraph 15 that approximately 50% power in the engine studies that lead to the emission factors were in fact two-stroke engines burning high-sulfur bunker oil. These emissions would be expected to be much higher than what the Tor Viking engines running low sulfur fuel would produce.

For these reasons, Shell believes the modeling it has conducted for the Tor Viking is very conservative and so predicts higher emissions than will occur in reality. Nevertheless, while we do not think it is necessary, Shell is willing to accept, as it did in May 2009, an new ORR (different from the May 2009 ORR) on the particulate emissions from the Tor Viking.

2. **Modify Nanuq daily fuel limitation from 1547 gallons per day to 47,000 kWhr/day to reflect actual vessel usage (see Condition Q.2)**

   None of Mr. Nair's 6 items address this request, so presumably, he has all the information needed on this requested change.

3. **Allow two hours of operation of the emergency generator per month to meet USCG requirements (see Conditions E.1; E.2)**

   It is our understanding from the discussions on November 17 that this request is acceptable to EPA, so no further discussion is provided here.

4. **Tighter restrictions on waste throughput limits for the Discoverer incinerator (Unit FD-23) in coordination with HPU operations (see Condition K.6.2)**

   It is our understanding from the discussions on November 17 that this request is acceptable to EPA, so no further discussion is provided here.

5. **Load monitoring for compliance assurance in place of the fuel monitoring for generator engines (see Conditions C, N, O, Q)**

   It is Shell's understanding that EPA's only additional information needed to address this issue was discussed by Pat Nair in his request No. 2 of his 6 items. Mr. Nair's request is repeated here directly from his email to Mr. Winges:

   bullet point #5 - load monitoring instead of fuel monitoring for main generators on Disco, Nanuq, Icebreakers #1 and #2. Rodger to resend manufacturer data on generator efficiencies for at least two of the engine categories. What about other engine categories.

Shell Response: The emission inventory prepared by Shell for the Chukchi application involved a number of different internal combustion engines. Air Sciences prepared the emission inventory and in all cases computed emissions for internal combustion engines using an energy input emission factor in pounds of pollutant emission per million British Thermal Units of fuel energy (lb/MMBtu). However, in many cases the emission factor used came from a reference where the quoted value was based not on energy (or fuel) input, but rather on some form of energy output for the engine, usually either horsepower-hours (hp-hr) or kilowatt-hours (kW-hr). Although all of these are units of energy and have simple conversion factors, the lb/MMBtu refers to the energy <u>input</u> to the engine, while hp-hr and kW-hr refer to the energy <u>output</u> of the engine. Since only a fraction of the energy in the fuel is converted to output energy, the concept of a heat rate is used, which specifies the quantity of Btu of input fuel energy needed to produce a hp-hr of engine output. Heat rates vary from engine to engine, but are typically

about 7,000 Btu/hp-hr. The permit application provides data on heat rates used for various engines in this project.

Further discussion on using kW-hr to specify the output of energy from the engine is provided below. The emission inventory specifies a simple units conversion for converting the kW-hr to hp-hr, but in addition a heat rate is used to convert the hp-hr of energy output into MMBtu of energy input. This is appropriate for emission calculations. However, for compliance tracking, some means is needed to track the engine energy, either input or output, so that emissions from the engine can be calculated and determined to be in compliance with permitted emission limits. One option is to measure the fuel consumed in each engine and convert that fuel quantity to energy using fuel data, based on how many MMBtu are in a gallon of fuel. But fuel monitoring is difficult, and often times not accurate. In addition, the engines are equipped with load monitors (see Attachment E), but not fuel monitors. Horsepower is difficult to measure directly, but if the engine is connected to an electrical generator, as most of these engines are, the electrical power output from the generator can be easily and accurately measured. Since virtually all of the engines with generators in the project have load monitors, the equipment needed to provide this tracking already exists.

However, Region 10 has commented that the electrical energy output from a connected generator is not exactly equal to the energy output of the engine. There is a small amount of energy lost between the engine and the generator. Typically, generators convert over 90% of the energy coming from the engine into electrical load. For example, Attachment B provides technical data on the Mak engines used for propulsion in the Tor Viking and it is indicated that 96% of the energy of the engine is converted to electrical load. Thus, load tracking can easily be converted into engine output by dividing the measured load (kW-hr) by 0.96 in this case. Then the heat rate for the engine provided in the emission inventory can be used to compute the fuel input and in turn the emissions from the engine. Attachment E provides technical data on a number of engine generator sets. Some examples are:

- Cat C32 ATAAC engine generator set, 1000 kW output, heat lost in the generator is 62.7 kW, so overall efficiency is (1000 – 62.7)/1000 = 0.94 or 94%.
- Cat C15 ATAAC engine generator set, 550 kW output, heat lost in the generator is 32.6 kW, so overall efficiency is (550 – 32.6)/550 = 0.94 or 94%.
- Cat C15 ATAAC engine generator set, 400 kW output, heat lost in the generator is 29.2 kW, so overall efficiency is (400 – 29.2)/400 = 0.93 or 93%.
- Cat C3512 engine generator set, 1500 kW output, heat lost in the generator is 64.1 kW, so overall efficiency is (1500 – 64.1)/1500 = 0.96 or 96%.

- Cat C9 ATAAC engine generator set, 250 kW output, heat lost in the generator is 19.7 kW, so overall efficiency is (250 – 19.7)/250 = 0.92 or 92%.

Based on the data from these sheets, which reflect engine generator sets of the same sizes as those proposed for the Shell project, assumptions can be made on the efficiency of the generator that would allow load monitoring to be an acceptable substitute for fuel monitoring, particularly, when it is considered that the load monitor accuracy is much greater than fuel monitor accuracy. Any error in the assumed efficiency is likely to be on the order of 1-2 percent, while fuel monitor error would be much greater. This margin of error would be even higher for many of the diesel engines on the Discoverer and support fleet that have fuel flowing in two directions, both to the engine and back from the engine to the fuel tank. Any measure of fuel flow would have to measure both of these streams and a difference would need to be taken. Since there is a lag time between when fuel is sent to the engine and when it returns to the tank the accuracy of these measurements is poor. If the engine is in steady state at a constant load the two flow directions might be in equilibrium, but the loads on the project engines are constantly varying and the bi-directional fuel flow will rarely be in equilibrium. This results in large errors in fuel flow measurements.

Accordingly, load monitoring will be more accurate and much simpler to accomplish than fuel monitoring. Shell therefore asks that EPA modify the permit to use load monitoring versus fuel monitoring as a means of demonstrating compliance.

6. **Eliminate unnecessary exclusion zone for icebreakers and Nanuq in proximity to Discoverer (see Conditions N.6, O.6, Q.3)**

   It is Shell's understanding that EPA's only additional information needed to address this issue was discussed by Pat Nair in his request No. 3 of his 6 items. Mr. Nair's request is repeated here directly from his email to Mr. Winges:

   bullet point #6 - travel through forbidden zones for Nanuq. Provide details on scenarios sought and supporting emissions and/or modeling as needed based on scenario.

Shell Response: Shell has further reviewed this original request and is withdrawing the request to allow the Nanuq to travel through the restricted zones, other than the present conditions which allow the Nanuq to approach the Discoverer for transfer of personnel or supplies. However, given that on occasion the wind will shift and the Nanuq must reposition itself to be downwind of the Discoverer, Shell requests permiot language that allows minor deviations from the 2000 meter standoff distance to allow for these repositioning events

(this request, however, would not allow the Nanuq to directly cross the restricted zone of come upwind of the Discoverer).

7. **Eliminate infeasible requirement for CEM for ammonia emissions (see Condition C.7.6.4)**

   None of Mr. Nair's 6 items address this request, so presumably, he has all the information needed on this requested change.

8. **Stack testing for icebreaker and anchor handler propulsion engines should be at realistic >30% capacity, rather than at 20% (see Conditions N.9, O.11)**

   None of Mr. Nair's 6 items address this request, so presumably, he has all the information needed on this requested change.

9. **Stack testing requirements should be reduced for the new Tier 3 engines, the cranes, the cementing and logging units, the boilers and utility generators (see Conditions F.5, G.7, H.7, I.7, J.5)**

   It is Shell's understanding that EPA's only additional information needed to address this issue was discussed by Pat Nair in his request No. 4 of his 6 items. Mr. Nair's request is repeated here directly from his email to Mr. Winges:

   bullet point #9 - stack testing of small engines. Shell (Rodger?) to provide narrative on why testing of certain engines is so problematic, e.g. example provided on disassembly of cranes to test

Shell Response: Shell has asked for the elimination of stack testing requirements for the small engines on the Discoverer and EPA concurrence that the emission factors provided in the August 2009 permit Statement of Basis (SOB) can properly be assumed to represent the maximum emission rates. All of these engines have power ratings under 550 hp and are small enough (without associated apparatus) that they could fit the back of a pickup truck. Shell believes that stack testing of these small engines is unnecessary because 1) the SOB factors are conservative, 2) the impacts of these engines are small, 3) the MLC compressors will be new and will already have been certified to meet Tier 3 standards when leaving the factory, and 4) the stack tests will be nearly impossible to perform for various technical and safety reasons.

These small engines consist of the following:

Device type	**Per-Engine Rating**	**PM2.5 Contribution to Maximum conc.***
MLC air	540 hp	4%

compressors		
HPUs	250 hp	Up to 23%
Cranes	365 hp	4%
Cementing	335 / 147 hp	13% (combined with logging)
Logging	128 hp / 36 kW	

* from Attachment B, Table 7-4, September 17, 2009 Comments on August 2009 EPA Permit R10OCS/PSD-AK-2009-01

Conservative emission factors used in August 2009 permit Statement of Basis

During the permitting process, EPA has chosen high emission factors for each engine type in order to ensure that impact standards would be met. These factors are higher than the averages for these engines, and when there are multiple engines making up a source, such as with the Discoverer, some engines will have emissions higher than the average and some lower than the average, but with multiple engines the probability is high that the over-all emissions will be very close to that average, which will be below conservative emission of the SOB.

Impact from these engines is small

From the table above, the MLC compressors and cranes contribute extremely small impacts to the total impact and the HPUs, cementing, and logging engines have minor contributions. For a source contributing up to about 25% to the total project impact (such as the HPUs), any source-specific stack test hypothetically showing a difference of 12 percent from the average emission would exert up to only a 3% effect (25% of 12%) on the project impact. So differences from the average emission factor have extremely small effects on the overall emissions.

The MLC air Compressors will be new and meet Tier 3 emission limits

The MLC compressors will be new and will have been certified as meeting Tier 3 limits. Without significant use since leaving the factory, there is no reason to expect emissions to have changed. These engines should continue to meet the Tier 3 standards

Stack tests are difficult to nearly impossible for these engines

It is the nature of the cranes that they operate only intermittently. For the cranes, typical operation time lifting any load would be for less than a minute. There is no easily attachable load to allow testing for periods longer than that. Hypothetically the spooling equipment (the load) could be detached and an electric generator attached, and the generator could be attached to a heater load bank. However, this would require new mounting frames to be fabricated for the generators, the units would need to be partially disassembled, and generators fit into place for the test. The crane engines are mounted on pedestals above the deck, and any load equipment exchange would be a major construction project. Aside from such an effort, these cannot be tested at steady-state engine

conditions. The effort to perform the stack tests listed in the August 2009 permit would be huge, expensive, and consume perhaps several months in the execution.

Logging winches, cementing units, MLC compressors, and HPU units are expected to operate in steady-state modes for several hours, so steady state conditions needed for stack testing could be met. These engines could be tested under actual loads, but selecting three particular loads (50%, 75%, and 100%) during the drilling process would be essentially impossible as the loads are determined by drill project needs, and the needs cannot be altered to match desired loads. Thus, stack tests could be performed during actual drilling, but the load at which the test occurred would be undefined until during the test. Such tests could not be performed prior to drilling.

Performance of a stack test prior to drilling would require an artificial load, such as a generator, and the issues with connection of an electric generator are the same as for the cranes; difficult, expensive and time-consuming. With the cementing pumps, there is a possibility of providing an artificial restriction in the flow. This would be a crude restriction which may not translate to loads of 50%, 75% and 100%. But more importantly, it would be unsafe maintaining the resulting high pressures for several hour periods in the piping on deck. There is no obvious artificial load that the drilling engineers have conceived. Although given time and work with these engines, Shell may be able to develop some practical substitute, none are known at this time. Shell believes that stack testing the MLC compressors, HPUs, logging winches and the cementing units prior to deployment will be difficult if not possible, and that if a method were to be developed that it may not have the flexibility to load the engines in a steady state manner at the three loads specified by EPA. Shell will provide additional information concerning the infeasibility of stack testing for these sources by November 30, 2009.

10. **Incinerator scale accuracy requirement should be 5 lb., not infeasible .05 lb. (see Condition K.8.1.2)**

    It is Shell's understanding that EPA's only additional information needed to address this issue was discussed by Pat Nair in his request No. 5 of his 6 items. Mr. Nair's request is repeated here directly from his email to Mr. Winges:

    bullet point #10 - scale accuracy for incinerator. Shell to provide narrative on why a scale accuracy of 0.05 is not required and proposal for a different accuracy. Can you please address whether incinerator will be run with partial loadings or only at full capacity.

Shell Response: In subsequent discussions between Kirk Winges and Pat Nair, it was agreed that a 0.5 lb accuracy is acceptable to both EPA and Shell because

scales accurate down to the 0.05 lb level are too delicate and sensitive for use on a marine vessel and that level of accuracy is not warranted.

11. **Redefine source to exclude regulation of Discoverer when not completely anchored (addressed in Shell comments dated September 17, but change not requested at that time) (see definition of "OCS Source")**

    Shell will ask MMS to provide the analysis R10 has requested.

II. Technical modifications to permit that may warrant discussion

Two additional modifications to the permit warrant some discussion.

1. **Required fuel consumption accuracy for fuel meters of 2% may not be feasible (see Conditions Q.7.1, O.12.1, N.10**

   The discussion under Item 5 above addresses this topic.

2. **Revise description of re-supply vessel for more realistic balance between allowable horsepower ratings of utility generators vs. propulsion engines, without increasing allowable emissions (see Condition L.1)**

   It is Shell's understanding that EPA's only additional information needed to address this issue was discussed by Pat Nair in his request No. 6 of his 6 items. Mr. Nair's request is repeated here directly from his email to Mr. Winges:

   bullet point #2 - change in re-supply vessel and method of operation. Kirk to provide new scenario(s) and emissions/modeling as needed depending on scenario

Shell Response: Shell has reviewed the plans for re-supply of the Discoverer, and is withdrawing the request to modify the permit with regard to the re-supply ship. The permit conditions as written for the re-supply ship will be acceptable.

II. Technical information needed to support R10 comment responses

There were a number of technical comments received by EPA regarding the draft permit. These technical comments can be divided into three general areas:

- Comments regarding the proposed control technologies and the Shell and R10 suggested determination of the Best Available Control Technology (BACT) in each case.

- Comments regarding ambient monitoring and the effect on the determination of background air quality for the Chukchi permit application.

- Comments regarding the ambient air quality impact analysis.

Each of these technical areas will be discussed separately.

A. BACT information

Shell has prepared a document entitled "Supplemental Control Technology Review Information" which has been included as Attachment F. We believe this document addresses all the major comments received regarding the proposed control technology for the Discoverer.

B. Ambient Monitoring

Mr. Herman Wong of R10 provided a summary of ambient monitoring and air quality modeling issues to Mr. Kirk Winges of Environ on Tuesday, November 17, 2009. It is Shell's understanding that this document summarizes all of areas where R10 feels additional information is needed to respond to comments that were raised regarding ambient monitoring during the public comment permit. There are 13 items listed in Mr. Wong's summary. The first 9 items concern ambient monitoring and will be discussed here. The remaining 4 items concern air quality impact analysis issues and will be discussed in the following section.

1. An approved Deadhorse Ambient Air Monitoring Plan with Data Quality Objectives.

Shell Response: As R10 is aware, the Deadhorse station is being run jointly by Shell and ConocoPhillips with ConocoPhillips taking the lead on the station. It is Shell's understanding they have already provided this proposed plan to R10, or will provide the requested plan well before the re-proposal date.

2. Initial audit reports and subsequently monthly/quarterly reports.

Shell Response: The reports are not yet available and will be provided to R10 as soon as they become available. The soonest report will be provided approximately November 30, 2009.

3. $PM_{2.5}$ hourly and 24-hourly measurements from continuous sampler and filter sampler, respective.

Shell Response: It is assumed that Mr. Wong refers here to the data from the Deadhorse station. The data are not yet available and will be provided to R10 as soon as they become available. The soonest reports will be provided approximately Nover 30, 2009.

4. *Twenty-five (25) days of FEM/FEM data for precision.*

Shell Response: The reports are not yet available and will be provided to R10 as soon as they become available. The soonest report will be provided approximately November 30, 2009.

5. *Twenty-five (25) days of FEM/FRM data for bias.*

Shell Response: The reports are not yet available and will be provided to R10 as soon as they become available. The soonest report will be provided approximately November 30, 2009.

6. *A revised Wainwright QAPP that includes a collocation discussion.*

Shell Response: Shell is in constant communication with the contractor for the Wainwright monitor and we have requested that the QAPP be provided to R10 as soon as possible. It is our understanding that this document may have already been provided to R10 or it should be available by the end of November.

7. *A minimum of four months of $PM_{2.5}$ measurements (01 July to 31 Oct plus any portions of November and December).*

Shell Response: Shell has provided all data to R10 that are currently in our possession and we will continue to provide these data to R10 for future sampling periods as soon as they are available.

8. *A recalculated Wainwright long term $PM_{2.5}$ concentration:*

    a. *During drill season (>4 months)*
    b. *Annual without the 8 November 2008to 6 March 2009 unacceptable data.*

Shell Response: These values cannot be calculated until all data have been collected. The calculations will be made and provided to R10 as soon as the data become available.

9. *Revised tables and discussion of NAAQS and increment compliance demonstration*

Shell Response: These tables cannot be revised until all data have been collected. The tables will be revised and provided to EPA as soon as the data become available.

C. Ambient Air Quality Impact Issues

10. Any new scenarios and modeling

Shell Response: Based on the revisions discussed under 1.0 above, there are no proposed revisions to the emission inventory. Accordingly, Shell does not envision the need to revise any of the air quality modeling from our September 09 submission.

.

11. A discussion of secondary formation of SO_x, NOx and Organics to $PM_{2.5}$ in the Arctic.

Shell Response: Particulate matter emissions from all combustion sources consist of a complex mixture. Some of the particulate matter is emitted directly as solid particles or small droplets of liquid (or both). These particles are called "primary particulate matter." Other particulate matter forms from gaseous chemicals contained in the exhaust that condense to form particles after exposure to the cooler temperatures of the atmosphere. These latter materials are called "condensable particulate matter." Finally, after a longer residence time in the atmosphere, additional gases can chemically react to form chemical species that more readily condense into particulate matter. These last particles are not chemically different from the condensable particle matter in that most of these consist of sulfates or nitrates, but they are treated differently and are termed "secondary particulate matter."

Currently, there is a regulatory difference between how PM10 and PM2.5 are treated. PM10 presently includes both primary particles and condensable particles, but current regulations call for PM2.5 to only address primary particles, not secondary particles. However, in the permit application for the Shell Chukchi project, for most of the engines, PM2.5 was assumed to be 100% of the PM10, thus it included all the condensable particles. This assumption was used for all the engines on board the Discoverer and was also used for the anchor handler and the oil spill recovery vessel. The only cases where separate emission factors were used for PM2.5 were for the incinerators, the engines on the primary ice breaker and the engines on the supply ship.

The formation of secondary particulate matter is addressed differently than the primary and condensable particles. Since the formation of secondary particulate matter requires additional time as well as sunlight and in some cases, moisture, the chemical formation of secondary particles is typically not treated in Class II air quality analyses, such as the one prepared for the Shell Chukchi permit application because peak impacts occur close to the source and there is

insufficient travel time for the pollutants to form these secondary pollutants. For this reason, the air quality models used in such analyses do not have the capability to address the complex atmospheric chemical reactions that result in sulfate and nitrate formation. The ISC model used in the Chukchi application does not have this capability, nor does the newer AERMOD model. Models that address these reactions are typically long-range transport models like CALPUFF and cannot be used for determination of NAAQS compliance within 50 kilometers of the source, where all the peak impacts occurred in this project. These models are typically only used if there are Class I areas potentially affected by the proposed project. Since there are no Class I areas within 500 kilometers of the proposed Chukchi project, no long range transport analysis was conducted.

12. A discussion of ozone formation in the Arctic (include the Wyoming high ozone concentrations during winter.

Shell Response: Ozone is an air pollutant formed through complex chemical reactions of nitrogen oxide (NOx) and volatile organic compound (VOC) emissions during periods of conducive weather conditions. Ozone is more readily formed when it is sunny and hot and the air is stagnant. Conversely, ozone production is more limited when it is cloudy, cool, rainy, and windy. For these reasons, ozone concentrations are generally the highest during the summer. The majority of tropospheric ozone formation occurs when nitrogen oxides (NOx), carbon monoxide (CO) and volatile organic compounds (VOCs), react in the atmosphere in the presence of sunlight. NOx, CO, and VOCs are called ozone precursors. The chemical reactions involved in tropospheric ozone formation are a series of complex cycles in which carbon monoxide and VOCs are oxidized to water vapor and carbon dioxide. The reactions involved in this process are illustrated below with CO but similar reactions occur for VOC as well. Oxidation begins with the reaction of CO with the hydroxyl radical. The hydrogen atom formed by this reacts rapidly with oxygen to give a peroxy radical HO2

$$OH + CO \rightarrow H + CO2$$

$$H + O2 \rightarrow HO2$$

Peroxy radicals then go on to react with NO to give NO2 which is photolysed (indicated by hv) to give atomic oxygen and through reaction with oxygen a molecule of ozone:

$$HO2 + NO \rightarrow OH + NO2$$

$$NO2 + hv \rightarrow NO + O$$

$$O + O2 \rightarrow O3$$

The net effect of these reactions is:

$$CO + 2O_2 \rightarrow CO_2 + O_3$$

This cycle involving HOx and NOx is terminated by the reaction of OH with NO2 to form nitric acid or by the reaction of peroxy radicals with each other to form peroxides. The chemistry involving VOCs is much more complex but the same reaction of peroxy radicals oxidizing NO to NO2 is the critical step leading to ozone formation.

Shell has assessed project's potential effects on regional ozone concentrations. The Chukchi coastline nearest to the Project is part of the State of Alaska's Northern Alaska Intrastate Air Quality Control Region (40 CFR 81.246). This region is designated as attainment or unclassifiable for all criteria pollutants, including ozone (40 CFR part 81.302).

According to the U.S. Department of Energy, although there are no oil fields near the proposed Chukchi operations, the nearest oil fields are to the west and the Prudhoe Bay, Kuparuk River, and Alpine oil fields are ranked 1, 3, and 4, respectively, as the largest oil fields in the United States based on estimated oil production.[1] The latest data from the Western Regional Air Partnership (WRAP) Emissions Data Management System (EDMS) indicates North Slope Borough emissions in 2002 (latest year of data available) from all sources (mobile, non-mobile, point, etc.) of NOx and VOC (i.e., ozone precursors), were approximately 42,500 tons/year and 1,600 tons/year, respectively.[2] Existing <u>actual</u> North Slope point source emissions of NOx and VOCs are approximately 41,000 tons and 1,100 tons/year, or 20 times more NOx and ten times more VOCs than <u>potential</u> emissions from the Project.

The ozone monitoring stations nearest the Shell lease areas are shown in Figure 1 taken from the Beaufort application. As shown in Table 1, measured ozone concentrations are no more than two-thirds of the eight-hour ambient air quality standard. Such concentrations may very well be attributable to injection of elevated ozone concentrations from the upper atmosphere. In contrast to areas of elevated ozone in the lower 48 states, the North Slope has very low VOC emissions from biogenic and regional transportation sources. Photochemical Grid Model studies of the North Slope conducted in the 1990s indicated that the high ratio of NOx to VOC emissions inhibits the chemistry required to maintain elevated ozone from local sources.

---

[1] U.S. Department of Energy. *Energy Information Administration Web Page*: http://www.eia.doe.gov/pub/oil_gas/natural_gas/data_publications/crude_oil_natural_gas_reserves/current/pdf/appb.pdf#page=9

[2] WRAP EDMS Database. Emissions Inventory Reports (EDMS). http://vista.cira.colostate.edu/tss/edms.aspx

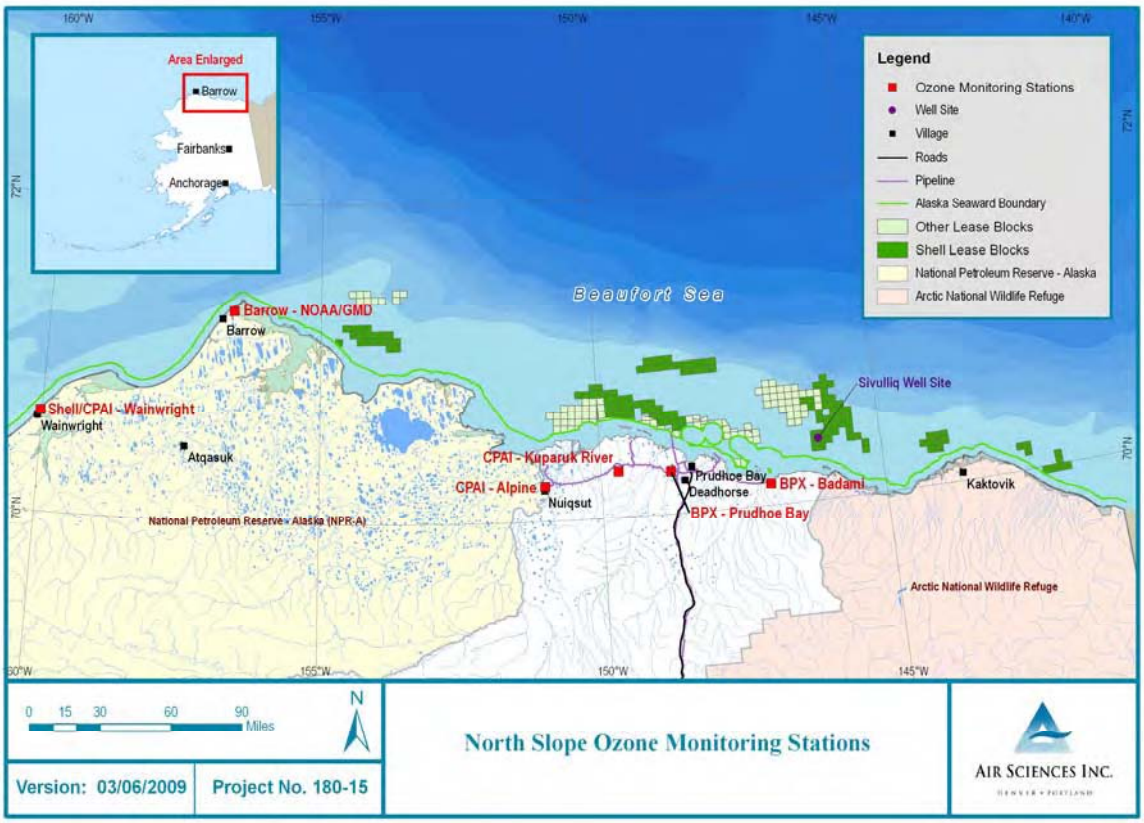

Figure 1. Monitoring Stations on the North Slope

Table 1. Measured Ozone Concentrations on the North Slope

		Max. Monitored Ozone Concentration (ppb)	
Facility	**Data Dates**	**1-Hour**	**8-Hour**
Shell/CPAI - Wainwright	November 2008 [1]	35	34
Barrow - NOAA/GMD	2003, 2004, 2005 [2]	52	50
BPX - Badami	1999 [3]	48	48
BPX - Prudhoe Bay	2006, 2007 [3]	52	44
BPX - Prudhoe Bay	2006, 2007 [3]	73	43
CPAI - Alpine	Nov. 2004 - Dec. 2005 [3]	64	49
CPAI - Kuparuk River	June 2001 - June 2002 [3]	45	45 [4]
	Ambient Standard (ppb) >	120 [6]	75 [5]

Potential emissions the Project reveal a NOx:VOC ratio of approximately twelve. This will continue the imbalance that inhibits ozone formation. Consequently, we do not expect Project emissions to lead to increased ozone formation on the North Slope.

13. New emissions per Pat Nair and revised modeling with CD.

Shell Response: Based on the revisions discussed under 1.0 above, there are no proposed revisions to the emission inventory. Accordingly, Shell does not envision the need to revise any of the air quality modeling from our September 09 submission.

.

Attachment A

Information on the Tor Viking
Proposed Anchor Handler Vessel for 2010

VIKING SUPPLY SHIPS AS
SHIPOWNERS

LATEST NEWS

18.09.2009 11:42:14
Commercial managers for Viking Barge

15.12.2008 15:41:58
The partners in Trans Viking agree to divide ownership

19.11.2008 21:32:53
Sponsoring the local rescue service

08.09.2008 13:45:56
Viking scores high on FPAL

News Archive

AHTS/Icebreaker Tor Viking II - Main Characteristics

Design :
KMAR 808 AHTS/ ICEBREAKER (Now; MOSSMAR)

Classification :
DnV,+1A1, TUG/SUPPLY VESSEL, SF, EO, ICEBREAKER ICE-10, HELDK-SH, WI-OC DK(+), HK(2.8), DYNPOS-AUTR (DP-Green)

Built / Delivered :
Havyard Leirvik, Norway - 03/2000 - IMO 9199622

Flag / Registered :
Swedish / Skärhamn

Owners :
Trans Viking Icebreaking & Offshore AS , Kristiansand, Norway

Commercial Managers :
Viking Supply Ships A/S, Kristiansand, Norway

Dimensions
Length Over All (LOA) : 83.70 metres
Length between p.p. : 75.20 metres
Breadth, moulded : 18.00 metres
Depth, moulded : 8.50 metres
Draught (scantling) : 7.20 metres
Draught (design) : 6.00 metres
Freeboard (design) : 2.50 metres

Tonnage
Dead Weight : 2,528 tonnes
Light Ship : 4,289 tonnes
Gross : 3,382 tonnes
Net : 1,145 tonnes

Capacities
Dry Bulk : 283 m 3 in 4 tanks - totalling 10,000 ft 3
Pot Water : 724 m 3
Drill Water / Ballast : 1,113 m 3
Brine : 400 m 3 – SG 2.5
Oil Based Mud : 657 m 3 – SG 2.8
Base Oil : 242 m 3
Fuel Oil : 1,190 m 3 Marine Gas Oil (Diesel)
Urea : 94 m 3
Diesel Overflow : 21 m 3 with alarm
Diesel Service / Settling : 2 x 20 m 3
Deck Load : Abt 1,350 ts
Deck Area : 603 m 2 / 40.20 m x 15.0 m
All products in dedicated tanks – no dual purpose tanks

Discharge Rates / Lines etc.
Dry Bulk : 2 x 25 m 3/h compressors – 80 psi. Two separate discharge systems.
Discharge rate 2 x 75 m 3 / h at 90 metres head
Pot Water : Discharge rate 1 x 250 m 3 / h at 9 bar

CONTACT US

Viking Supply Ships AS
Kirkegaten 1
P.O Box 204
N - 4662 KRISTIANSAND
NORWAY

Ph: **+47 38 12 41 70**

Drill Water / Ballast : Discharge rate 1 x 250 m 3 / h at 9 bar
Brine : Discharge rate 2 x 75 m 3 / h at 18 bar
Oil Based Mud : Discharge rate 2 x 75 m 3 / h at 24 bar - Oil Mud Agitators fitted
Base Oil : Discharge rate 1 x 75 m 3 / h at 9 bar
Fuel Oil (Diesel) : Discharge rate 1 x 250 m 3 / h at 9 bar
Discharge Stations : All products mid and aft both SB and PS
Discharge Lines : 6 inch Weco system with reducers for Pot / Drill Water, Fuel Oil and Dry Bulk
: 5 inch Weco system with reducers for Brine, Base Oil and Oil Base Mud
Tank cleaning : Mud and Base Oil tanks fitted with permanent tank cleaning system and heating
Flow Meters : Flow meters fitted for Pot Water and Fuel Oil (Digital display + printer for MGO)

Propulsion
Main Engine : MAK 18,300 BHP - 4 eng (father/son) 2 x 3,840 kW + 2 x 2,880 kW = 13,440 kW
Thrusters : Bow 1,200 BHP in tunnel (Electr) + 1,200 BHP 360 deg retractable = 2,400 BHP
: Stern 1,200 BHP in tunnel (Electrical)
Propellers : 2 KaMeWa 4 blades in nozzles – dia abt 4.0 meter
Rudders : 2 spade rudders

Bollard Pull
Bollard Pull : 202 continuous (DnV certified) / Abt 210 max pull

Speed/Consumption
Speed/Consumption : 16 knots – Abt. 42.7 MT / 24 hrs at 6.0 meter draught
12 knots – Abt. 15.6 MT
10 knots – Abt. 8.6 MT

Towing & Anchorhandling Equipment
AHT Winch : Brattvaag towing/anchorhandling winch 400 ts pull / 550 ts brake holding cap
AHT Drum : One of 1,400 mm dia. x 3,750 dia x (1,250 mm + 1,250 mm) length
Wire Capacity : 2 x 1,900 m of 77 mm wire or 2 x 1,650 m of 83 mm wire
AH Drum : One of 1,400 mm dia. x 3,750 mm dia. x 3,000 mm length
Wire Capacity : 4,100 m of 83 mm wire
Winch Control : TOWCON 2000 Aut. Control with printer
Secondary Winch: One off 1600 m of 203 mm synthetic rope
Barrel length 4200 mm + 2 x 1100 mm socket compartments
Work / Towing drums arranged according to latest NMD requirements
Cable Lifters : 2 x 76 mm and 2 x 84 mm onboard
Chain Lockers : 2 x 127 m 3 / giving abt 2 x 6,000 ft of 3 inch chain
Shark Jaws : 2 sets of Karm Forks arranged for chain up to 165 mm dia / 750 ts SWL
Inserts for handling 65, 75, 85, 100, and 120 mm dia. wire/chain
: Forks arranged with alarm system acc to latest NMD requirements
Stern Roller : One of 3,5 m dia. x 6.0 m length – SWL 500 ts
Guide Pins : 2 pairs of Karm Fork Hydraulic pins – SWL 170 ts

Workwires
Work Wire : 300 metres of 77 mm dia
Chase Wire : 1,000 metres of 83 mm dia
Main Tow Wire : 1,500 metres of 83 mm dia
Spare Tow Wire : 1,300 metres of 83 mm dia

Deck Equipment
Capstans : 2 x 15 ts pull
Tugger Winches : 2 x 15 ts pull
Smit Brackets : One bracket on B Deck FW – SWL 250 ts
Cranes : 1 hydraulic crane on forep cargo deck giving 6 / 12 ts at 20/10 m arm (360 degr)
: 1 telescopic crane on aft cargo deck giving 1.5 / 3 ts at 15/10 m arm (360 degr)
: 1 hydraulic crane on fore-castle deck for stores etc
Windlass : 1 hydraulic windlass / mooring winch. Two de-clutch able drums 46 mm K3 chain

Accommodation
Accommodation for a total of 23 persons, including crew
All accommodation equipped with air-condition and humidification facilities.

Misc.
We would like to highlight the exceptional good manoeuvrability of the vessel. Also please note the environmental bonus using "Tor Viking II" due to her exceptional low noise level, and the installed Exhaust Gas Treatment Systems (Catalyst), effectively reducing the NOx levels. "Tor Viking II" is also equipped with diesel overflow tank with alarm system. The vessels design, and her possibility for running 2 engines, ("father/son") gives very favourable fuel consumption.
Spooling Devizes and DynPos 2 – Kongsberg Simrad SDP21 – "DP Green" system were installed in May 2003

Particulars believed to be correct, without guarantee.

DOWNLOAD TECHNICAL SPECIFICATIONS IN PDF FORMAT

Copyright Viking Supply Ships AS & 247design | Design & Development 247design.no

Attachment B

Manufacturer Specification Data for Mak M32C Engines

M 32 C

Long-Stroke Diesel Engines for Maximum Efficiency and High Reliability

6 • 8 • 9 — In-line Engines

12 • 16 — V-Type Engines

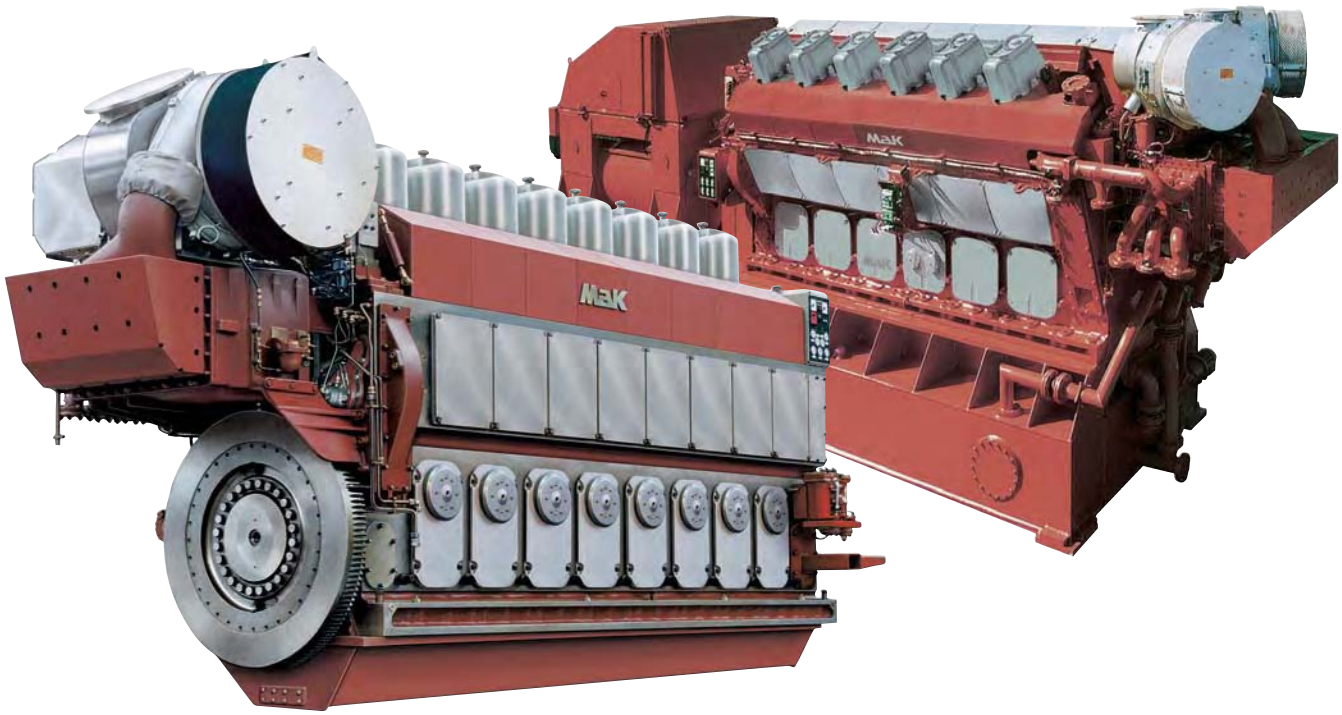

MaK

CATERPILLAR®

M 32 C – Powerful, Reliable and Economical

The acceptance of the M 32 C long-stroke engine series in the marine industry is a success story whose equal is hard to find in this power class.

Since its introduction in 1994, more than 1300 engines have been sold.

80% of those commissioned are marine propulsion engines and 20% are in electrical generator sets.

The M 32 C series is a genuine heavy fuel engine and 75% of all engines commissioned burn the economical heavy fuel oil.

The M 32 C long-stroke series, with a bore of 320 mm, has continued the market success of its predecessor in this bore size, the M 453 C.

Decisive factors in its development have been the requirements for maximum benefit to the customer, i.e. economy and operational reliability. Environmental aspects however have also been important.

Operational results have fully confirmed the design objectives.

Further development, which led to the M 32 C version with 500 kW, has provided even more benefits to the customer.

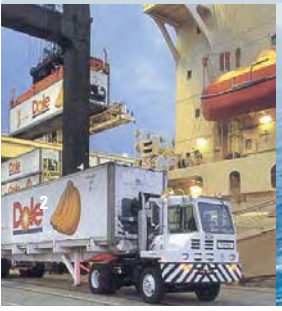

6, 8, 9,

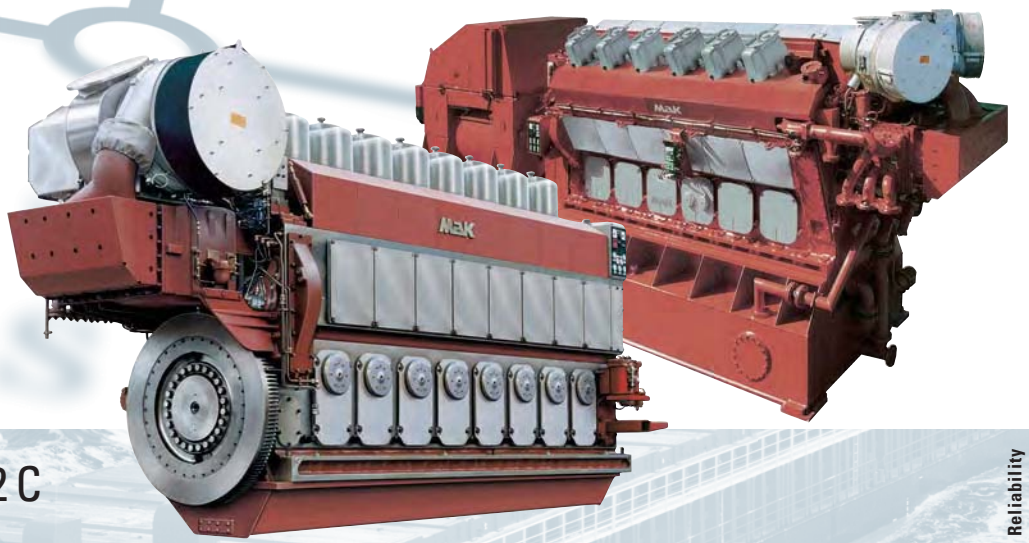

- M 32 C
- VM 32 C
- M 32 C – On-Board Power
- MaK Propulsion Packages
- Emission Reduction Technology

12, 16

M 32 C – Design Improvements

- Compact cylinder head design
- Engine control terminal
- Segmental camshaft design

Customer Benefits:

- Nodular cast-iron engine block with integrated ducts for lubricating oil and charge air
- Cooling water system with simple plug-in connections
- Simplified parts spectrum by using single-pipe exhaust gas ducting
- Pulse charging system, available as an option, for all in-line engine variants
- High-efficiency turbocharger
- Engine control terminal with analog instrumentation in robust cast casing
- Segmental camshaft design
- Compact cylinder head design
- Cylinder liner, only cooled outside the engine block
- Installation-friendly, due to pumps and filters installed on the engine
- Connecting rod, split off design
- Compact module for lower valve drives and injection pump drives with cam followers
- Emission reduction technology
- Flexible Camshaft Technology (FCT)
- Caterpillar Common Rail fuel system

9, 12, 16

M 32 C – Design Features

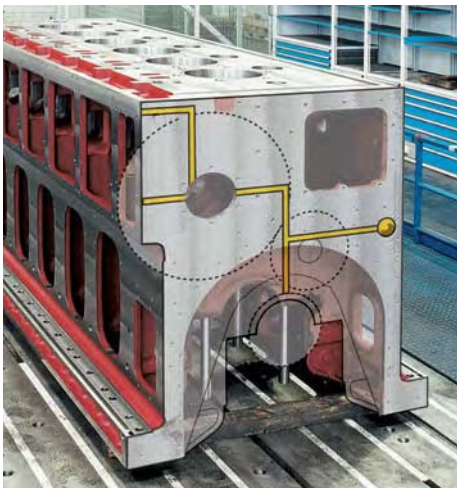

Nodular cast iron engine block and crankcase with integrated ducts for lubricating oil and charge air

- Lubricating oil supply to the crankshaft, camshaft control system and camshaft bearings through drilled ducts
- No piping
- No cooling water in the engine block
- Easy maintenance
- High level of operational safety

Simplified parts spectrum by using single-pipe exhaust gas ducting

- Identical cylinder parts
- Reduced component complexity
- Simple assembly/dismantling
- Low weight, low installation volume and low vibration level

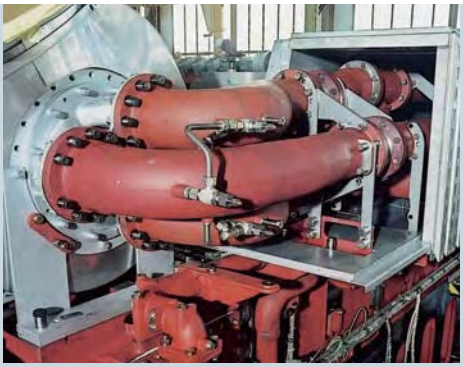

Pulse charging system, available as an option, for all in-line engine variants

- Advantages in marine propulsion systems subject to frequent changes of load
- Optimum engine acceleration without special control system arrangements

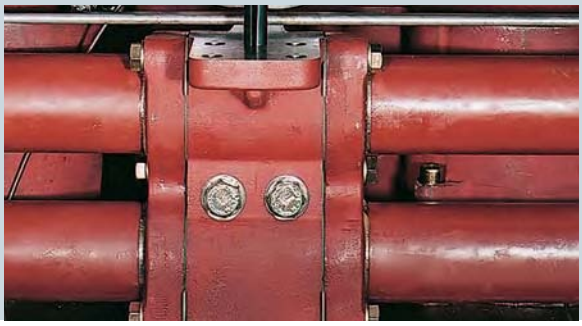

Cooling water system with simple plug-in connections

- Plug-in connections for the cooling water pipes with standard closure fittings
- Easy to fit, very maintenance-friendly
- Identical parts for each cylinder version
- Reduced number of components/parts
- Increased operational safety

M 32 C – Design Features

High-efficiency turbocharger

- Moderate temperature level of components surrounding the combustion chamber
- Corrosion-free turbocharger casing without water cooling

Cylinder liner, only cooled outside the engine block

- Low wear rate due to calibration ring
- Low and constant lubricating oil consumption
- Long life

Engine control terminal with analog instrumentation in robust cast casing

- Securely mounted with vibration damping on the crankcase
- Direct and reliable display of all operating media pressures by robust pressure gauges
- Engine and turbocharger speed display by vibration-protected analog instruments

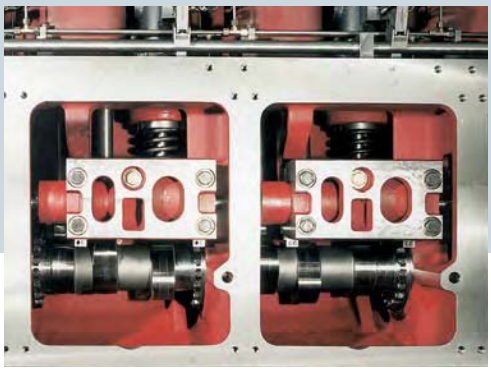

Segmental camshaft design

- Individual segments per cylinder
- Simple to assemble and dismantle

M 32 C – Design Features

Installation-friendly, because of pumps and filters installed on the engine

- Lubricating oil automatic filter fitted to the engine
- Replaces duplex filter and separate automatic filters
- Pumps and filters operate without any external power
- Reduces the parts requirements

Connecting rod, split off design

- High level of operational safety, the result of accurately preloaded bolts

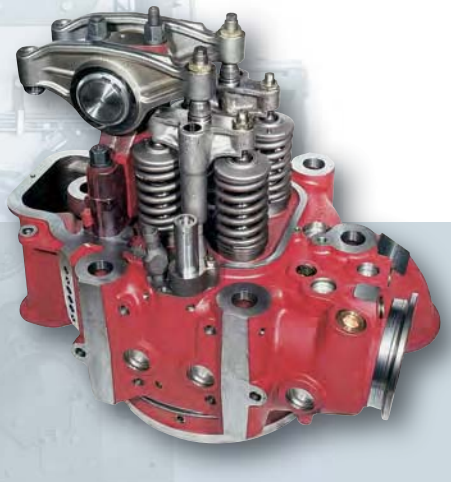

Compact module for lower valve drives and injection pump drives with cam followers

- Exact straight-line guidance for low-friction and low-wear operation

Compact cylinder head design

- Long intervals between overhauls
- Simple and fast assembly/ dismantling because of:
  – plug-in connections
  – integrated bores
  – self-centering

M 32 C – On-Board Electricity

M 32 C as a generator drive
The M 32 C was introduced in 1994 in 6, 8 and 9 cylinder versions and is outstandingly suitable as generator prime mover for electric power on ships. The robust design and moderate speed permits unlimited, continuous operation with heavy fuel oil. In-line engines – complete with generators – are mounted on a common base frame. Engine and electrics are tested prior to delivery. This ensures trouble-free installation and commissioning.

Economical operation with diesel-electric propulsion
Our engineers have extensive experience in the design of diesel-electric installations. This includes both pod propulsion systems and propulsion by fixed-pitch propellers driven by electric motors. The combination of up-to-date engine technology at the primary end of the propulsion train, and up-to-date diesel-electric technology at the secondary end, ensures low operation costs and better space utilization, which in turn means improved economy overall.

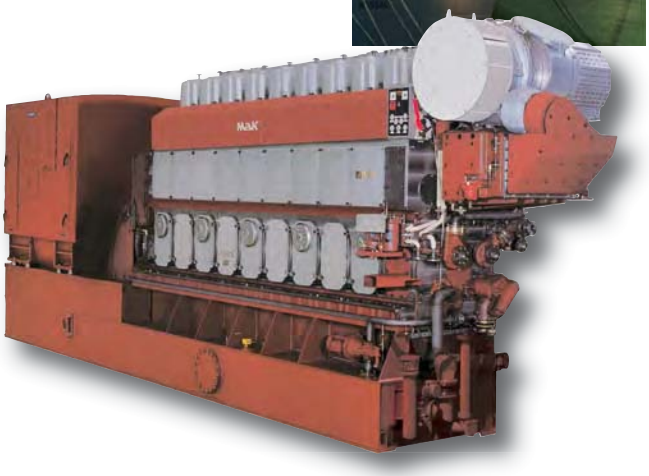

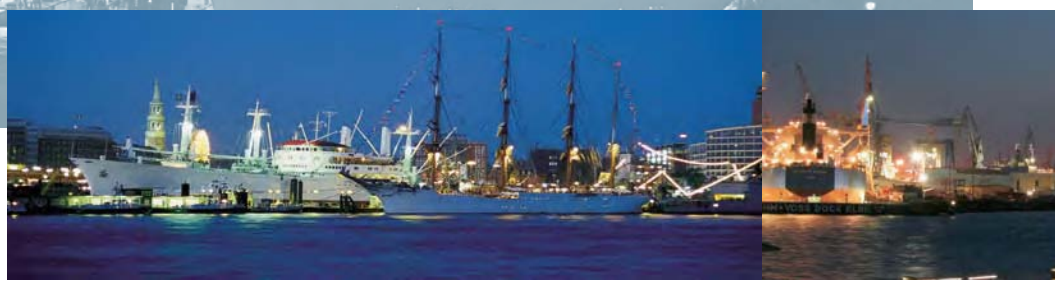

VM 32 C – Compact and Powerful!

The M 32 C V-engine was introduced in 2000 in 12- and 16-cylinder versions. With a bore of 320 mm and a stroke of 420 mm, it covers a power range of 5,760 – 8,000 kW in the 720 and 750 rpm ranges. The engine is designed to meet not only the demands of the marine market but also those of the stationary electric power generation and petroleum industry markets.

The consistent application of MaK long-stroke engine design and development, along with the incorporation of as many in-line engine components as possible, is clearly and impressively demonstrated in the external configuration: – a compact, simple and clean design.

The modular construction of the engine, the integration of various functions into a single component, the robust design and the utilization of already proven, in-line engine components, form the basis for the wide availability range of this engine.

Reliable heavy fuel oil operation, low fuel and lubricating oil consumption, together with easy maintenance and long maintenance intervals, mean outstanding economical operation.

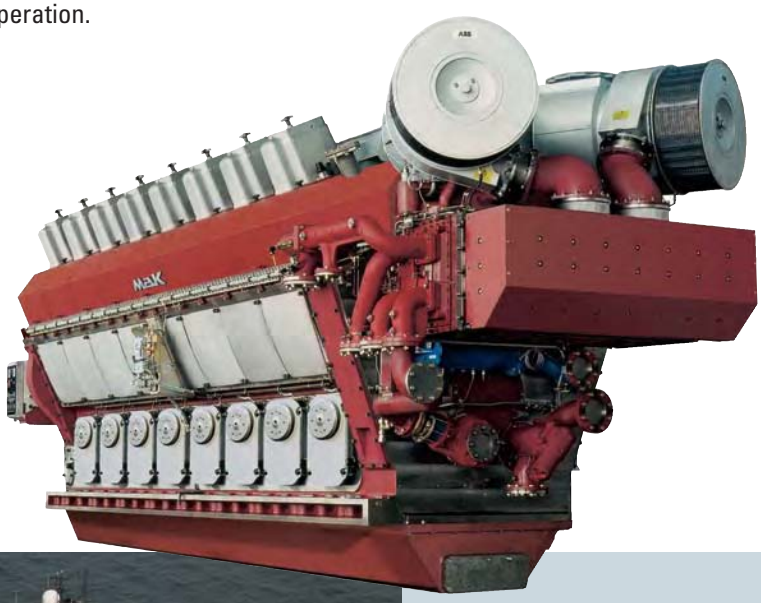

M 32 C – Economical from Installation to Operation

	TBO x 1000 h	Lifetime x 1000 h
Piston crown	30	90
Piston skirt	-	60
Piston rings	-	30
Cylinder liner	-	60 / 90*
Cylinder head	15	-
Inlet valve	15	30
Exhaust valve	15	30
Nozzle element	-	7,5
Pump element	-	15 / 20*
Main bearing	-	30
Big-end bearing	-	30

*MDO Operation

The above-mentioned data are not binding. They only serve as standard values. These standard values can be attained if the MaK operating and maintenance specifications are strictly observed and only MaK spare parts are used. Please consider as well the negative effect of bad fuel qualities.

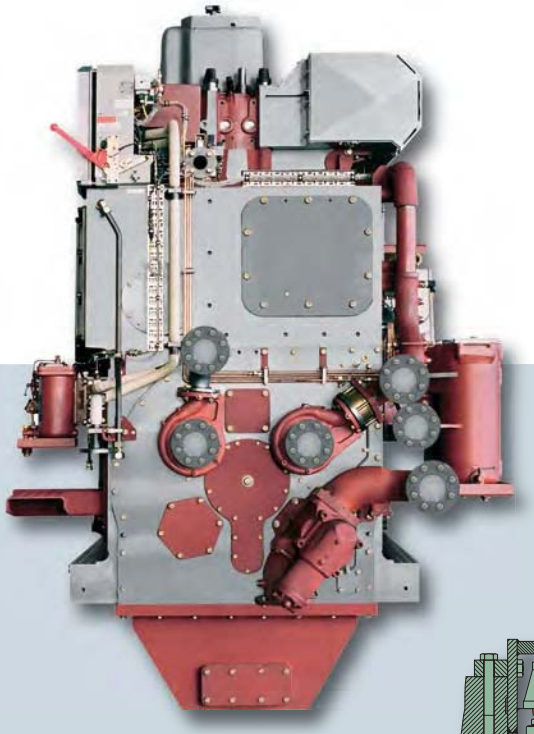

HFO/MDO
Anticipated TBO and life
Long maintenance intervals and extended life form the basis for low operating costs.

Complete engine
The engine is marketed with standardized pump and filter equipment. The interfaces for the fuel, lubricating oil and cooling water systems are located at the free end of the engine for ease of connection.

Lubricating oil system
Optional deep oil pan (wet sump).

Resilient foundation
The resilient foundation system can be assembled safely, simply and cheaply and ensures the damping of vibration and structure-borne noise.

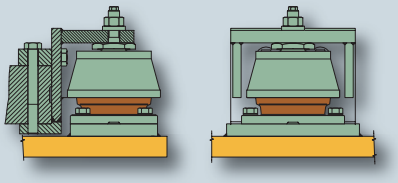

M 32 C – MaK Propulsion Package

Complete propulsion systems
The supply of complete propulsion systems is a market requirement which is becoming increasingly important. We have comprehensive experience through many completed installations and as a result or our close cooperation with competent partners.

We offer:
- System responsibility and supply – all from a single source
- Accurately matched interfaces
- Coordinated delivery date control

A complete propulsion system usually consists of:
- MaK main propulsion engine with flexible coupling
- Reduction gearbox with or without installed clutch and gearbox PTO with shaft generator
- Propeller and shaft installation
- Matched remote control and monitoring equipment

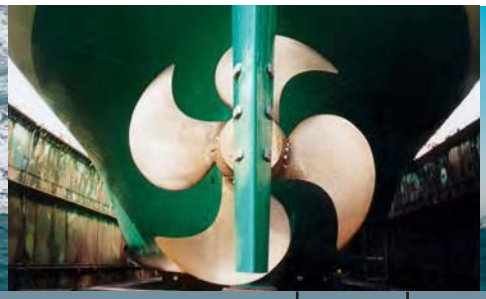

Engine							Gear	Shaft		Propeller		
Type	Rating	Speed										Speed
	kW	rpm	A	B	C	D	E	F	G	H	Ø	rpm
6 M 32 C	3000	600	5931	2369	1387	3258	1795	1600	3400	630	3500	195
8 M 32 C	4000	600	7135	2180	1387	3319	1795	2500	3500	735	4000	175
9 M 32 C	4500	600	7827	2180	1387	3513	2140	2400	3600	795	4200	170
12 M 32 C	6000	720/750	6963	2985	1205	3395	2140	5000	5000	867	4650	155
16 M 32 C	8000	720/750	8313	2985	1205	3351	2140	5000	5000	978	5050	157

Subject to be changed

Examples of complete propulsion systems

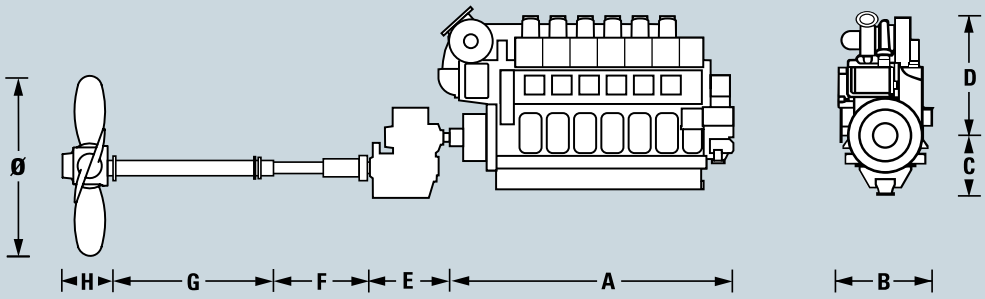

M 32 C – Emission Reduction Technology

Flex Cam Technology (FCT) has been developed and put into production. The next milestone in emissions technology is a fully flexible fuel system suitable for DO, MDO and HFO, called the Caterpillar Common Rail (CCR) fuel system. Caterpillar Common Rail is considered the major building block towards low emissions, high performance and highest customer value. Caterpillar has chosen "inside the engine" measures as the technology with the highest customer value.

High Pressure Pump

In combination with the long-stroke concept and high performance air systems the Caterpillar Common Rail (CCR) fuel system is the most effective technology to meet emission regulations and customer expectations

With **Caterpillar Common Rail**, the injection pressure is independent from load and speed. Utilizing injection maps the injection characteristics are optimized for every engine operating point. As a result, NO_x and soot emissions are reduced with the amount of reduction dependent on the actual engine operating condition.

For areas that are especially emissions-sensitive, soot emissions at low engine load remain well below the visibility limit. Furthermore, during normal load operation NO_x emissions can be reduced without sacrificing fuel consumption. In general, the Caterpillar Common Rail fuel system enables vessel operation without visible soot throughout the whole operating range.

Key criteria are:

- Compliance with current and future required emission limits for the respective power ranges.
- Customer expectations in terms of engine performance, maintenance practices, fuel quality and mode of operation.

By adopting well proven elements of this technology for medium-speed engines, it is our goal to meet and exceed customer expectations by maximizing product value through:

- Superior reliability in heavy fuel operation.
- Best fuel efficiency in its class.
- Lowest engine emissions with minimum additional complexity.

Control Device ADEM4

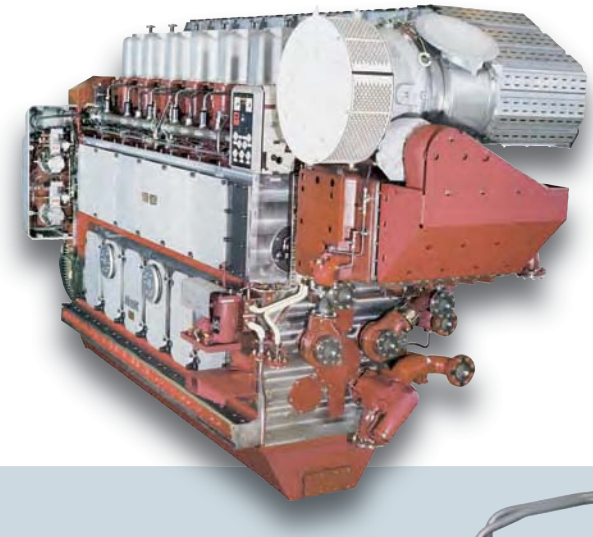

Rail Segment with Three Injectors

Injector

M 32 C – Technical Data • IN-LINE ENGINE

PROPULSION + GENERATOR SETS

Number of cylinders	In-line	6, 8, 9		6, 8, 9	
Bore	mm	320		320	
Stroke	mm	480		480	
Cylinder rating	kW	480		500	
Rated speed	rpm	600		600	
Mean piston speed	m/s	9.6		9.6	
Mean effective pressure	bar	24.9		25.9	
Cylinder pressure	bar	190		198	
Engine power		**kW**		**kW**	
	6 M 32 C	2880		3000	
	8 M 32 C	3840		4000	
	9 M 32 C	4320		4500	
		60Hz/50Hz		**60Hz/50Hz**	
Generator power*		**kWe**	**kVA**	**kWe**	**kVA**
	6 M 32 C	2765	3456	2880	3600
	8 M 32 C	3686	4608	3840	4800
	9 M 32 C	4147	5184	4320	5400
Specific fuel consumption at 100% power**		**g/kWh**		**g/kWh**	
	6 M 32 C	179		179	
	8, 9 M 32 C	178		178	
Specific lubricating oil consumption		0.6 g/kWh, ± 0.3 g/kWh			

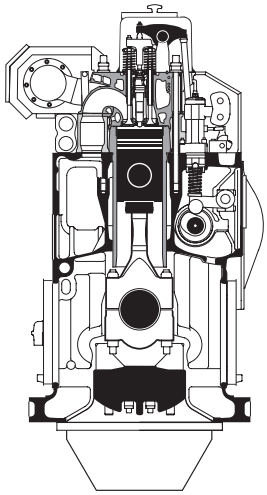

* Generator efficiency: 0.96, cos φ: 0.8 ** ISO conditions Hu = 42,700 kJ/kg, without installed pumps, tolerance 5%

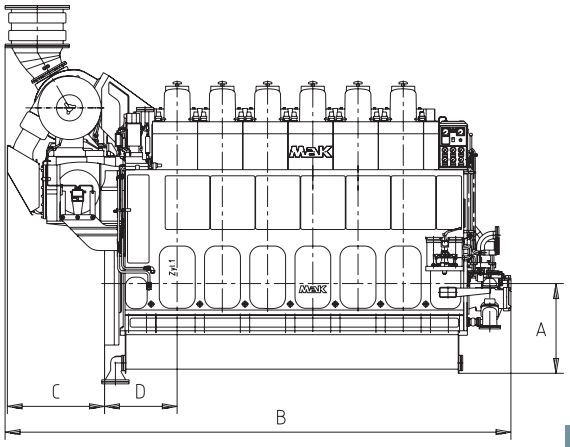

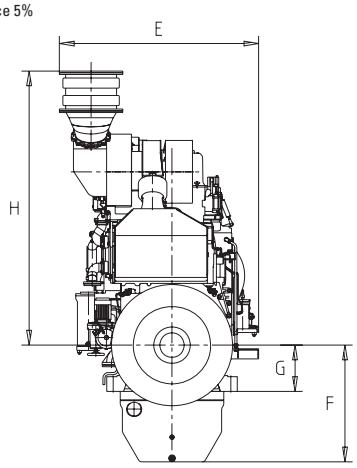

■ M 32 C In-Line Propulsion

Propulsion Engine (Dimensions in mm)									
Engine	A	B	C	D	E	F	G	H	t
6 M 32 C	1052	5931	1140	852	2369	1387	550	3258	37.5
8 M 32 C	1052	7135	1279	852	2180	1387	550	3319	46.4
9 M 32 C	1052	7827	1279	852	2180	1387	550	3513	49.4

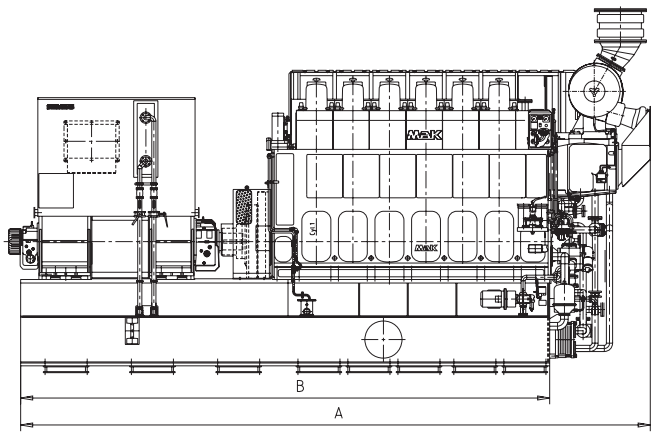

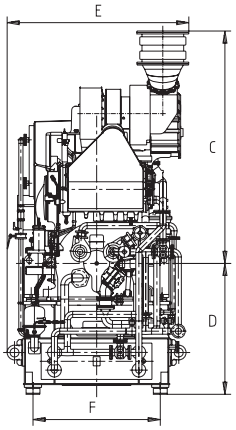

■ M 32 C In-Line Generator Set

Generator Set, Complete (Dimensions in mm)							
Engine	A	B	C	D	E	F	t
6 M 32 C	9128	7670	3375	1900	2639	1850	51.0
8 M 32 C	10556	8915	3319	1900	2600	1850	61.0
9 M 32 C	11419	9550	3513	1900	2600	1850	64.9

M 32 C – Technical Data • V-TYPE ENGINE

PROPULSION + GENERATOR SETS

Cylinder number	V-Version	12, 16	12, 16
Bore	mm	320	320
Stroke	mm	420	420
Cylinder rating	kW	480	500
Rated speed	rpm	720	750
Mean piston speed	m/s	10.1	10.5
Mean effective pressure	bar	23.7	23.7
Cylinder pressure	bar	190	190
Engine power		**kW**	**kW**
	12 M 32 C	5760	6000
	16 M 32 C	7680	8000
		60Hz	**50Hz**
Generator power*		**kWe kVA**	**kWe kVA**
	12 M 32 C	5530 6912	5760 7200
	16 M 32 C	7373 9216	7680 9600
Specific fuel consumption at 100% power**	**12, 16 M 32 C**	**g/kWh** 178	**g/kWh** 179
Specific lubricating oil consumption		0.6 g/kWh, ± 0.3 g/kWh	

* Generator efficiency: 0.96, cos φ: 0.8 ** ISO conditions Hu = 42,700 kJ/kg, installed pumps, tolerance 5%

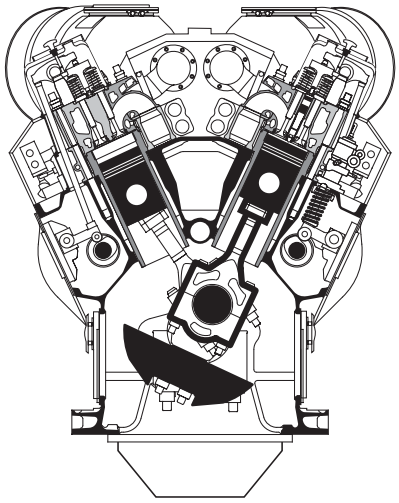

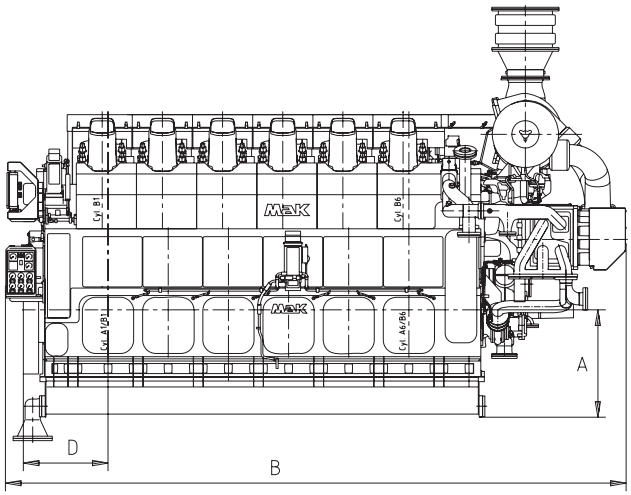

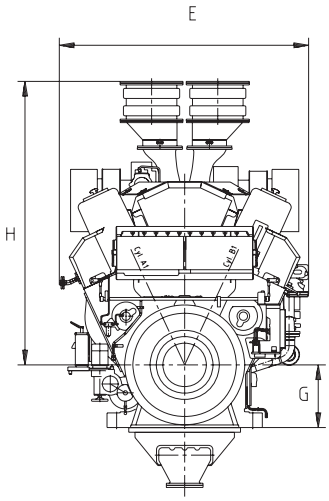

■ VM 32 C V-Type-Engine Propulsion

Propulsion Engine (Dimensions in mm)							
Engine	A	B	D	E	G	H	t
12 M 32 C	1205	6963	949	2985	750	3395	64.5
16 M 32 C	1205	8313	949	2985	750	3351	81.6

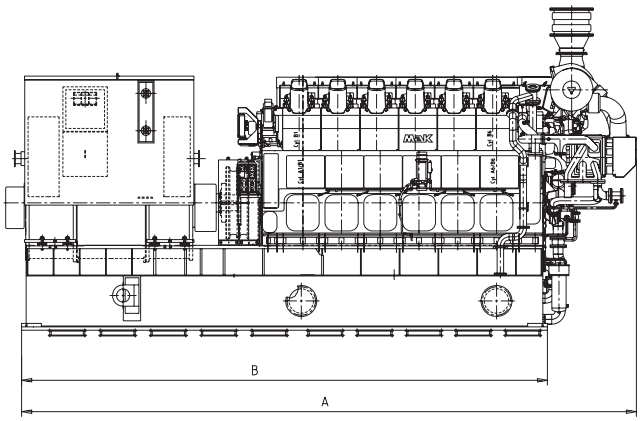

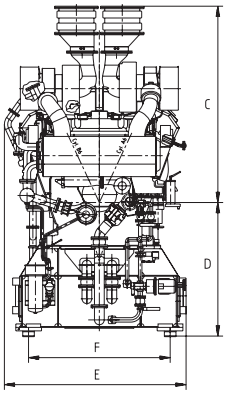

■ M 32 C V-Type Generator Set

Generator Set, Complete (Dimensions in mm)							
Engine	A	B	C	D	E	F	t
12 M 32 C	10710	9160	3395	2310	3142	2450	84.8
16 M 32 C	12060	10510	3351	2310	3000	2450	105.1

Cat Financial – World-Class Financing Solutions

You specify Cat or MaK power solutions, because you believe in the power of Caterpillar engines to keep you and your vessel safely on course. Cat Financial has the same commitment to your success – whether you need construction, term or repower financing.

We know how to support customers in one country, construction in a second country and registration in a third. We understand the marine industry – we've been lending to marine customers for more than 20 years. And, as it has been since 1986, our service commitment is powered by Caterpillar and Cat and MaK dealers everywhere.

Global Coverage

Whether you're a German operator building at a Chinese shipyard or a U.S. citizen building a yacht in Italy, Cat Financial can help. Our customers do business around the world, and we support them wherever they go.
Our service commitment extends to all marine sectors. From production and custom yachts to workboats and tankers – we have you covered.

Local Presence

Need a local expert? We know local markets and how to navigate the legal and regulatory environments.
Cat Financial has offices in the Americas, Europe and Asia, and financing representatives all over the world. Put our knowledge to work to power the deal.

Get your project moving anywhere in the world with Cat Financial – backed by the power of Caterpillar and our unmatched dealer network.

Visit us online at
www.marine.cat.com/finance

Ocean-Going Vessels

Pleasure Craft

Commercial Vessels

Integrated Solutions – Customer Support Portfolio

Providing integrated solutions for your power system means much more than just supplying your engines. Beyond complete auxiliary and propulsion power systems, we offer a broad portfolio of customer support solutions and financing options. Our global dealer network takes care of you wherever you are – worldwide. Localized dealers offer on-site technical expertise through marine specialists and an extensive inventory of all the spare parts you might need.

To find your nearest dealer, simply go to:
www.marine.cat.com

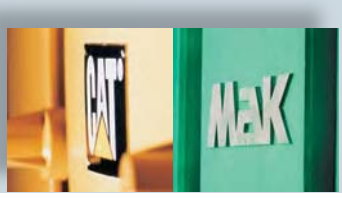

One Strong Line of World-Class Diesel Engines

Perfect Solutions for Main Propulsion and On-Board Power Supply

The Program: Quality is our Motto

For more than 80 years we have developed, built, supplied and serviced diesel engines – worldwide. Today Caterpillar Marine with its brands Cat and MaK offer high-speed and medium-speed engines with power ratings from 11 kW to 16,000 kW. Many different engine families are available to meet your specific application needs.

Cat and MaK diesel engines are distinguished by high reliability, extremely low operational costs, simple installation and maintenance and compliance with IMO environmental regulations.

The application of engines in main and auxiliary marine power systems varies greatly and extends from high-speed boats and yachts, through tugs, trawlers and offshore vessels to freighters, ferries and cruise liners.

Caterpillar Marine Power Systems

Sales and Service Organization

Caterpillar has combined the sales and service activities and responsibility of their Cat and MaK brand marine engine business into Caterpillar Marine Power Systems with headquarters in Hamburg/ Germany.

In setting-up this worldwide structure, we have concentrated on integrating the Cat and MaK brand groups into a single, united marine team, which utilises the particular expertise of each group.

Commercial marine engine business is split into three geographic regions,
– Europe, Africa, Middle East
– Americas
– Asia-Pacific,

Onboard Power Supply

C1.5
3 cylinder
10–14.5 kWe
10–18 kVA

C2.2
4 cylinder
16–30 kWe
16–37.5 kVA

C4.4
4 cylinder
36–99 kWe
45–123 kVA

C9
6 cylinder
142–250 kWe
178–313 kVA

C18
6 cylinder
275–550 kWe
344–688 kVA

3400
6, 12 cylinder
200–590 kWe
250–738 kVA

3500
8, 12, 16 cylinder
590–1,825 kWe
738–2,281 kVA

C280
6, 8, 12, 16 cylinder
1,650–5,200 kWe
2,063–6,500 kVA

GENSETS

3056
6 cylinder
93–153 kW

C7
6 cylinder
187–339 kW

C9
6 cylinder
375–423 kW

C12
6 cylinder
254–526 kW

C15
6 cylinder
597–636 kW

C18
6 cylinder
339–747 kW

C32
12 cylinder
492–1,342 kW

Medium-Speed Engines

C280
6, 8, 12, 16 cylinder
1,730–5,420 kW

M 20 C
6, 8, 9 cylinder
1,020–1,710 kW

M 25 C
6, 8, 9 cylinder
1,800–3,000 kW

MAIN PROPULSION

Production Facilities

which manage all sales and product support activities. They have direct responsibility for achieving the ambitious growth targets set for the Cat and MaK brands and for providing our customers and dealers with complete marine solutions.

Caterpillar's global dealer network provides a key competitive edge – customers deal with people they know and trust.

Cat dealers strive to form a strong working relationship with their customers, offering comprehensive and competent advice from project support to repair work.

Some of the most advanced manufacturing concepts are used at Caterpillar locations throughout the world to produce engines in which reliability, economy and performance are second-to-none.

From the production of core components to the assembly of complete engines, quality is always the top priority.

Comprehensive, recognized analysis systems, test procedures and measuring methods ensure that quality requirements are met throughout all the individual manufacturing phases. All of our production facilities are certified under 1:2000 ISO 9001 EN, the international benchmark that is helping to set new quality standards worldwide.

In addition to product quality, our customers expect comprehensive service which includes the supply of spare parts throughout the life of the engine.

Caterpillar Logistics Services, Inc., located in Morton, Illinois, is the largest parts distribution facility within the Cat Logistics network and is also the headquarters for all the worldwide distribution centres. Morton utilises sophisticated material handling, storage and retrieval systems to support Caterpillar's customer service goals.

● **M 20 C**
6, 8, 9 cylinder
970–1,625 kWe
1,210–2,030 kVA

● **M 25 C**
6, 8, 9 cylinder
1,710–2,850 kWe
2,140–3,560 kVA

● **M 32 C**
6, 8, 9 cylinder
2,765–4,320 kWe
3,456–5,400 kVA

● **VM 32 C**
12, 16 cylinder
5,530–7,680 kWe
6,912–9,600 kVA

● **3500**
8, 12, 16 cylinder
526–2,525 kW

■ **High-Speed Engines**

Propulsion Engines

● **M 32 C**
6, 8, 9 cylinder
2,880 – 4,500 kW

● **VM 32 C**
12, 16 cylinder
5,760 – 8,000 kW

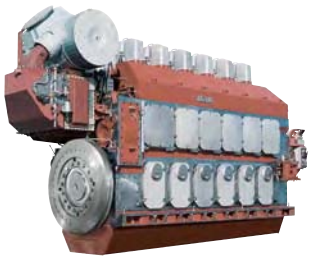

● **M 43 C**
6, 7, 8, 9 cylinder
5,400 – 9,000 kW

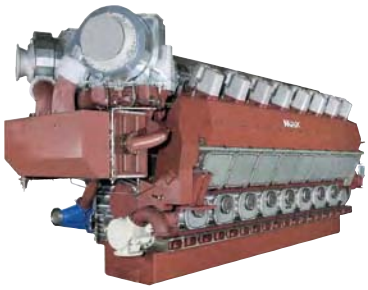

● **VM 43 C**
12, 16 cylinder
10,800 – 16,000 kW

Caterpillar Marine Power Systems

Headquarters

Caterpillar Marine Power Systems
Neumühlen 9
22763 Hamburg/Germany

Phone: +49 40 2380-3000
Telefax: +49 40 2380-3535

Europe, Africa, Middle East

Caterpillar Marine Power Systems
Neumühlen 9
22763 Hamburg/Germany

Phone: +49 40 2380-3000
Telefax: +49 40 2380-3535

Americas

MaK Americas Inc.

3450 Executive Way
Miramar Park of Commerce
Miramar, FL. 33025/USA
Phone: +1 954 447 71 00
Telefax: +1 954 447 71 15

Asia Pacific

Caterpillar Marine Trading (Shanghai) Co., Ltd.
25/F, Caterpillar Marine Center
1319, Yan'an West Road
200050 Shanghai/P. R. China
Phone: +86 21 6226 2200
Telefax: +86 21 6226 4500

Caterpillar Marine Asia Pacific Pte Ltd
14 Tractor Road
Singapore 627973/
Singapore
Phone: +65 68287-600
Telefax: +65 68287-624

For more information please visit our website:
www.marine.cat.com

Subject to change without notice.
Leaflet No. 231 · 09.08 · e · L+S · VM3

© 2008 Caterpillar All Rights Reserved. CAT, CATERPILLAR, their respective logos, „Caterpillar Yellow" and the POWER EDGE trade dress, as well as corporate identity used herein, are trademarks of Caterpillar and may not be used without permission

Attachment C

Emission Source Test Results
Mak M32C Engine

TEST DATA SUMMARIES

Shell Offshore, Inc. - Norway
Tor Viking II
Main Engine #2 (SCR On)
80% Load

Moisture & Airflow

Test Dates: 5/18/2007

	Run 1	Run 2	Run 3
Dates:	5/18/2007	5/18/2007	5/18/2007
Barometric Pressure at Ref. Bar. (in. Hg):	29.90	29.96	29.90
Height of Sampling Location Above Ref. Bar. (ft):	0.00	0.00	0.00
Barometric Pressure at Sampling Location:	**29.90**	**29.96**	**29.90**

TABLE OF CONTENTS:

Data Sheet
Calculation Sheet
Run Sheet - Run 1
Run Sheet - Run 2
Run Sheet - Run 3
NO_x

Sampling Data Summary

Parameter	Run 1	Run 2	Run 3	Average
Total Sampling Time, Min.	60	60	60	60
Stack Gas Oxygen Content, O_2%	13.5	13.5	13.6	13.5
Stack Gas Carbon Dioxide Content, CO_2%	5.6	5.6	5.6	5.6
Gas Sample Volume at Standard Conditions, cu. ft.	35.943	35.810	34.661	35.471
cu. m.	1.018	1.014	0.981	1.004
Dry Stack Gas Flow Rate (Dry, STP), dscf/min	9,710.9	9,534.9	8,976.6	9407.5
dscm/min	274.9	269.9	254.1	266.3

Project Number: 150614

TRC Environmental Corp.

EMISSION MEASUREMENTS DEPARTMENT

19874 141st Place N.E.
Woodinville, WA 98072
Phone: (425) 489-1938
Fax: (425) 489-9564

CLIENT:	Shell Offshore, Inc. - Norway	DATES:	5/18/2007
LOCATION:	Tor Viking II	PROJECT NO.:	150614
UNIT:	Main Engine #2 (SCR On)	PERSONNEL:	MM/PJC/JT
CONDITION:	80% Load		

Data Input Sheet

The table below contains the results of testing and calculations performed by TRC on the date(s) listed.

Moisture & Airflow

Parameter	SYMBOL	UNITS	DATA			
Test Number			Run 1	Run 2	Run 3	
Test Date			5/18/2007	5/18/2007	5/18/2007	
Method 4 Start Time			1553	1708	1821	
Method 4 Stop Time			1653	1808	1921	**3-RUN AVG.**
Stack Diameter	ds	inches	27.5	27.5	27.5	
Barometric Pressure at Sampling Location	Pbar	in. Hg	29.90	29.96	29.90	29.92
Stack Static Pressure	Pg	in. H_2O	1.05	1.05	1.15	1.08
Pitot Coefficient	cp	none	0.84	0.84	0.84	
Meter Calibration Factor	Y	none	0.976	0.976	0.976	
	DH@	none	1.678	1.678	1.678	
Stack Gas Oxygen Content	O_2	%	13.5	13.5	13.6	13.5
Stack Gas Carbon Dioxide Content	CO_2	%	5.6	5.6	5.6	5.6
Net Moisture Gain (Impingers w/SiGel)	Ww	grams	206.0	206.0	206.0	206.0
Average Stack Temperature	ts	deg F	582.5	580.4	587.0	583.3
Average Meter Temperature	tm	deg F	68.8	70.3	72.4	70.5
Avg Delta H	dH	in. H_2O	1.00	1.00	1.00	1.00
Average Square Root Delta H	ASR dH	in. H_2O	1.000	1.000	1.000	1.000
Avg Velocity Head	dP	in. H_2O	1.15	1.11	0.99	1.08
Average Square Root Delta P	ASR dP	in. H_2O	1.063	1.042	0.985	1.030
Gas Sample Volume	Vm	cu. ft.	36.816	36.710	35.742	36.423
Total Sampling Time	min	minutes	60	60	60	

TRC Environmental Corp.

EMISSION MEASUREMENTS DEPARTMENT

19874 141st Place N.E.
Woodinville, WA 98072
Phone: (425) 489-1938
Fax: (425) 489-9564

CLIENT:	Shell Offshore, Inc. - Norway	DATES:	5/18/2007
LOCATION:	Tor Viking II	PROJECT NO.:	150614
UNIT:	Main Engine #2 (SCR On)	PERSONNEL:	MM/PJC/JT
CONDITION:	80% Load		

Calculation Sheet

The table below contains the results of testing and calculations performed by TRC on the date(s) listed.

Moisture & Airflow

Parameter	SYMBOL	UNITS	DATA			
Test Number			Run 1	Run 2	Run 3	
Test Date			5/18/2007	5/18/2007	5/18/2007	
Method 4 Start Time:			1553	1708	1821	
Method 4 Stop Time:			1653	1808	1921	
Calculated Data						**3-RUN AVG.**
Stack Area,As=3.14159*((Ds/12)/2)^2	As	sq.ft.	4.12	4.12	4.12	4.12
Avg Stack Temperature, Ts=ts+460	Ts	deg R	1042.5	1040.4	1047.0	1043.3
Meter Pressure, Pm=Pb+Dh/13.6	Pm	in. Hg	29.97	30.03	29.97	29.99
Avg Meter Temperature, Tm=tm+460	Tm	deg R	528.8	530.3	532.4	530.5
Gas Sample Volume at Standard Conditions,	Vm(std)	cu. ft.	35.943	35.810	34.661	35.471
Vm(std)= 528/29.92*Y*Vm*Pm/Tm		cu. m.	1.018	1.014	0.981	1.004
Net Moisture Gain (Impingers w/SiGel)	Ww	mL	206.0	206.0	206.0	206.0
Volume of Water Vapor, Vw(std)= 0.04715*Wlc	Vw(std)	cu. ft.	9.713	9.713	9.713	9.713
Moisture Fraction, Bws = Vw(Std)/(Vm(Std)+Vw(Std))*100	Bws	%	8.36%	8.36%	8.36%	8.36%
Dry Stack Gas Molecular Weight, Md = (0.32*O2)+(0.44*CO2)+(0.28*(100-(O2+CO2)))	Mwd	g/g-mole	29.44	29.44	29.44	29.44
Wet Stack Gas Molecular Weight Mw = Md* (1-Bws)+(18*(Bws))	Mws	g/g-mole	28.48	28.48	28.48	28.48
Absolute Stack Pressure, Ps = Pbar + Pg/13.6	Ps	in. Hg.	29.98	30.04	29.98	30.00
Stack Gas Velocity Vs= 85.49*Cp*ASRdP*((Ts)/((Ps)*(Mw)))^0.5	Vs	ft/sec	84.39	82.52	78.32	81.74
Vsm = 0.3048* Vs	Vsm	m/sec	25.72	25.15	23.87	24.92
Actual Stack Gas Flow Rate, Qa = 60*Vs*As	Qa	acf/min	20,884.2	20,423.0	19,382.6	20,229.9
Stack Gas Flow Rate (STP), Qsw = 528/29.92 * Qa * (Ps/Ts)	Qsw	scf/min	10,597.3	10,405.2	9,796.0	10,266.1
Dry Stack Gas Flow Rate (Dry, STP),	Qsd	dscf/min	9,710.9	9,534.9	8,976.6	9,407.5
Qsd = 528/29.92 * Qa * (1-Bws)* (Ps/Ts)		dscm/min	274.9	269.9	254.1	266.3

Sampling Data Summary

Parameter	SYMBOL	UNITS	Run 1	Run 2	Run 3	3-RUN AVG.
Total Sampling Time	min	minutes	60	60	60	60
Stack Gas Oxygen Content	O_2	%	13.5	13.5	13.6	13.5
Stack Gas Carbon Dioxide Content	CO_2	%	5.6	5.6	5.6	5.6
Gas Sample Volume at Standard Conditions,	Vm(std)	cu. ft.	35.943	35.810	34.661	35.471
		cu. m.	1.018	1.014	0.981	1.004
Dry Stack Gas Flow Rate (Dry, STP),	Qsd	dscf/min	9,710.9	9,534.9	8,976.6	9,407.5
		dscm/min	274.9	269.9	254.1	266.3

TRC Environmental Corp

EMISSION MEASUREMENTS DEPARTMENT

19874 141st Place N.E.
Woodinville, WA 98072
Phone: (425) 489-1938
Fax: (425) 489-9564

CLIENT:	Shell Offshore, Inc. - Norway	DATE:	5/18/2007
LOCATION:	Tor Viking II	PROJECT NO.:	150614
UNIT:	Main Engine #2 (SCR On)	PERSONNEL:	MM/PJC/JT
CONDITION:	80% Load		

Field Data Sheet

The table below contains the results of testing and calculations performed by TRC on the date(s) listed.

Moisture & Airflow

RUN NO: **Run 1**
Minutes per point: 5
number of points: 16
OPERATOR: Paul Clark/George Huner

POINT NUMBER	TIME	DGM READING INITIAL	VEL. Dp Dp (in. H_2O)	Sqrt Dp Dp	DIFF PRESS. DH	DIFF PRESS. Sqrt.	STACK TEMP. (°F)	DRY GAS METER TEMP (°F) INLET	DRY GAS METER TEMP (°F) OUTLET
A1	0	810.687	1.20	1.095	1.0	1.000	587	64	64
2	5		1.40	1.183	1.0	1.000	588	67	64
3	10		1.50	1.225	1.0	1.000	590	70	66
4	15		1.20	1.095	1.0	1.000	590	73	67
5	20		0.82	0.906	1.0	1.000	589	75	68
6	25		0.82	0.906	1.0	1.000	590	75	68
7	30		0.80	0.894	1.0	1.000	591	74	68
8	35		0.80	0.894			592		
B1	40		1.50	1.225			593		
2	45		1.40	1.183			594		
3	50		1.40	1.183			591		
4	55		1.20	1.095			590		
5	60	847.503	0.87	0.933			590		
6			0.86	0.927			591		
7			0.88	0.938			592		
8			0.86	0.927			592		
A1			1.30	1.140			563		
2			1.40	1.183			564		
3			1.50	1.225			566		
4			1.30	1.140			568		
5			1.10	1.049			568		
6			1.00	1.000			569		
7			1.00	1.000			570		
8			0.97	0.985			573		
B1			1.50	1.225			575		
2			1.60	1.265			579		
3			1.70	1.304			581		
4			1.40	1.183			582		
5			1.00	1.000			583		
6			0.93	0.964			583		
7			0.79	0.889			584		
8			0.75	0.866			583		
	Total	Total	Avg.	Avg.	Avg.	Avg.	Avg.		Avg.
	60.0	36.816	1.148	1.063	1.00	1.000	582.5		68.8

Impinger Gain (for all 3 runs)

impinger 1:	180.0	130.0	50.0
impinger 2:	100.0	100.0	0.0
impinger 3:	80.0	30.0	50.0
impinger 4:	232.0	126.0	106.0
		Net Weight Gain (mL):	206.0

M4 Start Time: 1553
M4 Stop Time: 1653

			Avg.
Static Pressure:	1.10	1.00	1.05

TRC Environmental Corp.

EMISSION MEASUREMENTS DEPARTMENT

19874 141st Place N.E.
Woodinville, WA 98072
Phone: (425) 489-1938
Fax: (425) 489-9564

CLIENT:	Shell Offshore, Inc. - Norway	DATE:	5/18/2007
LOCATION:	Tor Viking II	PROJECT NO.:	150614
UNIT:	Main Engine #2 (SCR On)	PERSONNEL:	MM/PJC/JT
CONDITION:	80% Load		

Field Data Sheet

The table below contains the results of testing and calculations performed by TRC on the date(s) listed.

Moisture & Airflow

RUN NO: **Run 2**
Minutes per point: 5
number of points: 16
OPERATOR: Paul Clark/George Huner

POINT NUMBER	TIME	DGM READING INITIAL	VEL. Dp Dp (in. H_2O)	Sqrt Dp Dp	DIFF PRESS. DH	DIFF PRESS. Sqrt.	STACK TEMP. (^oF)	DRY GAS METER TEMP (°F) INLET	DRY GAS METER TEMP (°F) OUTLET
A1	0	847.817	1.30	1.140	1.0	1.000	563	69	67
2	5		1.40	1.183	1.0	1.000	564	73	67
3	10		1.50	1.225	1.0	1.000	566	74	67
4	15		1.30	1.140	1.0	1.000	568	74	67
5	20		1.10	1.049	1.0	1.000	568	75	67
6	25		1.00	1.000	1.0	1.000	569	75	67
7	30		1.00	1.000	1.0	1.000	570	75	67
8	35		0.97	0.985			573		
B1	40		1.50	1.225			575		
2	45		1.60	1.265			579		
3	50		1.70	1.304			581		
4	55		1.40	1.183			582		
5	60	884.527	1.00	1.000			583		
6			0.93	0.964			583		
7			0.79	0.889			584		
8			0.75	0.866			583		
A1			1.50	1.225			586		
2			1.50	1.225			585		
3			1.50	1.225			587		
4			1.20	1.095			587		
5			1.00	1.000			586		
6			0.90	0.949			585		
7			0.92	0.959			585		
8			0.90	0.949			585		
B1			1.10	1.049			588		
2			1.00	1.000			588		
3			1.00	1.000			586		
4			0.83	0.911			586		
5			0.70	0.837			586		
6			0.69	0.831			587		
7			0.70	0.837			587		
8			0.70	0.837			588		
	Total	Total	Avg.	Avg.	Avg.	Avg.	Avg.		Avg.
	60.0	36.710	1.106	1.042	1.00	1.000	580.4		70.3

Impinger Gain (for all 3 runs)

impinger 1:	180.0	130.0	50.0
impinger 2:	100.0	100.0	0.0
impinger 3:	80.0	30.0	50.0
impinger 4:	232.0	126.0	106.0
		Net Weight Gain (mL):	206.0

M4 Start Time: 1708
M4 Stop Time: 1808

			Avg.
Static Pressure:	1.00	1.10	1.05

TRC Environmental Corp.

EMISSION MEASUREMENTS DEPARTMENT

19874 141st Place N.E.
Woodinville, WA 98072
Phone: (425) 489-1938
Fax: (425) 489-9564

CLIENT:	Shell Offshore, Inc. - Norway	DATE:	5/18/2007
LOCATION:	Tor Viking II	PROJECT NO.:	150614
UNIT:	Main Engine #2 (SCR On)	PERSONNEL:	MM/PJC/JT
CONDITION:	80% Load		

Field Data Sheet

The table below contains the results of testing and calculations performed by TRC on the date(s) listed.

Moisture & Airflow

RUN NO: **Run 3**
Minutes per point: 5
number of points: 16
OPERATOR: Paul Clark/George Huner

POINT NUMBER	TIME	DGM READING INITIAL	VEL. Dp Dp (in. H_2O)	Sqrt Dp Dp	DIFF PRESS. DH	DIFF PRESS. Sqrt.	STACK TEMP. (°F)	DRY GAS METER TEMP (°F) INLET	DRY GAS METER TEMP (°F) OUTLET
A1	0	885.245	1.50	1.225	1.0	1.000	586	72	69
2	5		1.50	1.225	1.0	1.000	585	73	69
3	10		1.50	1.225	1.0	1.000	587	74	70
4	15		1.20	1.095	1.0	1.000	587	76	70
5	20		1.00	1.000	1.0	1.000	586	76	69
6	25		0.90	0.949	1.0	1.000	585	77	70
7	30		0.92	0.959	1.0	1.000	585	78	70
8	35		0.90	0.949			585		
B1	40		1.10	1.049			588		
2	45		1.00	1.000			588		
3	50		1.00	1.000			586		
4	55		0.83	0.911			586		
5	60	920.987	0.70	0.837			586		
6			0.69	0.831			587		
7			0.70	0.837			587		
8			0.70	0.837			587		
A1			1.80	1.342			588		
2			0.98	0.990			588		
3			1.00	1.000			588		
4			0.97	0.985			587		
5			0.80	0.894			586		
6			0.70	0.837			586		
7			0.73	0.854			587		
8			0.73	0.854			587		
B1			1.30	1.140			588		
2			1.20	1.095			589		
3			1.20	1.095			589		
4			1.10	1.049			588		
5			0.78	0.883			588		
6			0.75	0.866			587		
7			0.73	0.854			588		
8			0.73	0.854			588		
	Total	Total	Avg.	Avg.	Avg.	Avg.	Avg.		Avg.
	60.0	35.742	0.989	0.985	1.00	1.000	587.0		72.4

Impinger Gain (for all 3 runs)

impinger 1:	180.0	130.0	50.0
impinger 2:	100.0	100.0	0.0
impinger 3:	80.0	30.0	50.0
impinger 4:	232.0	126.0	106.0
		Net Weight Gain (mL):	206.0

M4 Start Time: 1821
M4 Stop Time: 1921

			Avg.
Static Pressure:	1.10	1.20	1.15

TRC Environmental Corp.

EMISSION MEASUREMENTS DEPARTMENT

19874 141st Place N.E.
Woodinville, WA 98072
Phone: (425) 489-1938
Fax: (425) 489-9564

CLIENT:	Shell Offshore, Inc. - Norway	DATE:	05/18/07
LOCATION:	Tor Viking II	PROJECT NO.:	150614
UNIT:	Main Engine #2 (SCR On)	PERSONNEL:	MM/PJC/JT
CONDITION:	80% Load		

REPORTING SHEET

The table below contains the results of testing and calculations performed by TRC on the date(s) listed.

Emissions Calculations - Measured

Method 7E - Nitrogen Oxides (NO_x)

Parameter	SYMBOL	UNITS	DATA			
Test Number			Run 1	Run 2	Run 3	AVG
Test Date			5/18/2007	5/18/2007	5/18/2007	
Start Time			1553	1709	1821	
Stop Time			1653	1809	1921	
Calculated Data						
Stack Gas Oxygen Content	O_2	%	13.5	13.5	13.6	13.5
Moisture Fraction, Bws = Vw(Std)/(Vm (Std)+Vw(Std))	Bws	none	8.36%	8.36%	8.36%	8.36%
Dry Stack Gas Flow Rate (DRY, STP),	Qsd	dscf/min	9,710.9	9,534.9	8,976.6	9,407.5
Qsd = 17.647 * Q * (1-Bws)* (Ps/Ts)		dscm/min	274.9	269.9	254.1	266.3
Method 19 Fuel Factor for Diesel Oil		dscf/MMBtu	9,190	9,190	9,190	9,190
Diesel Fuel Useage		L/hr	601	604	498	568
Diesel Fuel Useage		gal/hr	158.8	159.6	131.6	150.0
Gaseous Constituents						
Nitrogen Oxides (NO_x)						
NO_x Emission Concentration (dry)	ppm	NO_x	190.8	200.8	223.5	205.0
NO_x Emission Rate	lb/hr	NO_x	13.3	13.7	14.4	13.8
NO_x Emission Rate	lb/MMBtu	NO_x	0.5913	0.6223	0.7021	0.6386
NO_x Emission Rate	lb/gal	NO_x	0.0836	0.0860	0.1093	0.0929

TEST DATA SUMMARIES

Shell Offshore, Inc. - Norway
Tor Viking II
Main Engine #2 (SCR On)
57% Load

Moisture & Airflow

Test Dates: 5/18/2007

	Run 4	Run 5	Run 6
Dates:	5/18/2007	5/18/2007	5/18/2007
Barometric Pressure at Ref. Bar. (in. Hg):	29.90	29.90	29.90
Height of Sampling Location Above Ref. Bar. (ft):	0.00	0.00	0.00
Barometric Pressure at Sampling Location:	**29.90**	**29.90**	**29.90**

TABLE OF CONTENTS:

Data Sheet
Calculation Sheet
Run Sheet - Run 4
Run Sheet - Run 5
Run Sheet - Run 6
NO_x

Sampling Data Summary

Parameter	Run 4	Run 5	Run 6	Average
Total Sampling Time, Min.	60	60	60	60
Stack Gas Oxygen Content, O_2%	13.6	13.6	13.7	13.6
Stack Gas Carbon Dioxide Content, CO_2%	5.5	5.5	5.5	5.5
Gas Sample Volume at Standard Conditions, cu. ft.	35.471	35.085	34.834	35.130
cu. m.	1.004	0.993	0.986	0.995
Dry Stack Gas Flow Rate (Dry, STP), dscf/min	7,618.7	7,615.4	7,676.1	7636.8
dscm/min	215.7	215.6	217.3	216.2

Project Number: 150614

TRC Environmental Corp.

EMISSION MEASUREMENTS DEPARTMENT

19874 141st Place N.E.
Woodinville, WA 98072
Phone: (425) 489-1938
Fax: (425) 489-9564

CLIENT:	Shell Offshore, Inc. - Norway	DATES:	5/18/2007
LOCATION:	Tor Viking II	PROJECT NO.:	150614
UNIT:	Main Engine #2 (SCR On)	PERSONNEL:	MM/MLE
CONDITION:	57% Load		

Data Input Sheet

The table below contains the results of testing and calculations performed by TRC on the date(s) listed.

Moisture & Airflow

Parameter	SYMBOL	UNITS	DATA			
Test Number			Run 4	Run 5	Run 6	
Test Date			5/18/2007	5/18/2007	5/18/2007	
Method 4 Start Time			1835	2100	2215	
Method 4 Stop Time			2035	2200	2315	**3-RUN AVG.**
Stack Diameter	ds	inches	27.5	27.5	27.5	
Barometric Pressure at Sampling Location	Pbar	in. Hg	29.90	29.90	29.90	29.90
Stack Static Pressure	Pg	in. H_2O	-0.15	-0.15	-0.15	-0.15
Pitot Coefficient	cp	none	0.84	0.84	0.84	
Meter Calibration Factor	Y	none	0.976	0.976	0.976	
	DH@	none	1.678	1.678	1.678	
Stack Gas Oxygen Content	O_2	%	13.6	13.6	13.7	13.6
Stack Gas Carbon Dioxide Content	CO_2	%	5.5	5.5	5.5	5.5
Net Moisture Gain (Impingers w/SiGel)	Ww	grams	182.0	182.0	182.0	182.0
Average Stack Temperature	ts	deg F	632.8	633.0	633.0	632.9
Average Meter Temperature	tm	deg F	71.2	69.5	75.0	71.9
Avg Delta H	dH	in. H_2O	1.00	1.00	1.00	1.00
Average Square Root Delta H	ASR dH	in. H_2O	1.000	1.000	1.000	1.000
Avg Velocity Head	dP	in. H_2O	0.72	0.72	0.73	0.73
Average Square Root Delta P	ASR dP	in. H_2O	0.849	0.849	0.856	0.851
Gas Sample Volume	Vm	cu. ft.	36.499	35.985	36.099	36.194
Total Sampling Time	min	minutes	60	60	60	

TRC Environmental Corp.

EMISSION MEASUREMENTS DEPARTMENT

19874 141st Place N.E.
Woodinville, WA 98072
Phone: (425) 489-1938
Fax: (425) 489-9564

CLIENT:	Shell Offshore, Inc. - Norway	DATES:	5/18/2007
LOCATION:	Tor Viking II	PROJECT NO.:	150614
UNIT:	Main Engine #2 (SCR On)	PERSONNEL:	MM/MLE
CONDITION: 57% Load			

Calculation Sheet

The table below contains the results of testing and calculations performed by TRC on the date(s) listed.

Moisture & Airflow

Parameter	SYMBOL	UNITS	DATA			
Test Number			Run 4	Run 5	Run 6	
Test Date			5/18/2007	5/18/2007	5/18/2007	
Method 4 Start Time:			1835	2100	2215	
Method 4 Stop Time:			2035	2200	2315	
Calculated Data						**3-RUN AVG.**
Stack Area,As=3.14159*((Ds/12)/2)^2	As	sq.ft.	4.12	4.12	4.12	4.12
Avg Stack Temperature, Ts=ts+460	Ts	deg R	1092.8	1093.0	1093.0	1092.9
Meter Pressure, Pm=Pb+Dh/13.6	Pm	in. Hg	29.97	29.97	29.97	29.97
Avg Meter Temperature, Tm=tm+460	Tm	deg R	531.2	529.5	535.0	531.9
Gas Sample Volume at Standard Conditions,	Vm(std)	cu. ft.	35.471	35.085	34.834	35.130
Vm(std)= 528/29.92*Y*Vm*Pm/Tm		cu. m.	1.004	0.993	0.986	0.995
Net Moisture Gain (Impingersl)	Ww	mL	146.0	146.0	146.0	146.0
Net Moisture Gain (Impinger w/SiGel)	Ww	grams	36.0	36.0	36.0	36.0
Volume of Water Vapor, Vw(std)= 0.04715*Wlc	Vw(std)	cu. ft.	8.581	8.581	8.581	8.581
Moisture Fraction, Bws = Vw(Std)/(Vm(Std)+Vw(Std))*100	Bws	%	7.53%	7.53%	7.53%	7.53%
Dry Stack Gas Molecular Weight, Md = (0.32*O2)+(0.44*CO2)+(0.28*(100-(O2+CO2)))	Mwd	g/g-mole	29.42	29.42	29.43	29.43
Wet Stack Gas Molecular Weight Mw = Md* (1-Bws)+(18*(Bws))	Mws	g/g-mole	28.56	28.56	28.57	28.57
Absolute Stack Pressure, Ps = Pbar + Pg/13.6	Ps	in. Hg.	29.89	29.89	29.89	29.89
Stack Gas Velocity Vs= 85.49*Cp*ASRdP*((Ts)/((Ps)*(Mw)))^0.5	Vs	ft/sec	68.97	68.96	69.51	69.15
Vsm = 0.3048* Vs	Vsm	m/sec	21.02	21.02	21.19	21.08
Actual Stack Gas Flow Rate, Qa = 60*Vs*As	Qa	acf/min	17,069.2	17,065.4	17,202.4	17,112.3
Stack Gas Flow Rate (STP), Qsw = 528/29.92 * Qa * (Ps/Ts)	Qsw	scf/min	8,239.0	8,235.5	8,301.2	8,258.6
Dry Stack Gas Flow Rate (Dry, STP),	Qsd	dscf/min	7,618.7	7,615.4	7,676.1	7,636.8
Qsd = 528/29.92 * Qa * (1-Bws)* (Ps/Ts)		dscm/min	215.7	215.6	217.3	216.2

Sampling Data Summary

Parameter	SYMBOL	UNITS	Run 4	Run 5	Run 6	3-RUN AVG.
Total Sampling Time	min	minutes	60	60	60	60
Stack Gas Oxygen Content	O_2	%	13.6	13.6	13.7	13.6
Stack Gas Carbon Dioxide Content	CO_2	%	5.5	5.5	5.5	5.5
Gas Sample Volume at Standard Conditions,	Vm(std)	cu. ft.	35.471	35.085	34.834	35.130
		cu. m.	1.004	0.993	0.986	0.995
Dry Stack Gas Flow Rate (Dry, STP),	Qsd	dscf/min	7,618.7	7,615.4	7,676.1	7,636.8
		dscm/min	215.7	215.6	217.3	216.2

TRC Environmental Corp

EMISSION MEASUREMENTS DEPARTMENT

19874 141st Place N.E.
Woodinville, WA 98072
Phone: (425) 489-1938
Fax: (425) 489-9564

CLIENT:	Shell Offshore, Inc. - Norway	DATE:	5/18/2007
LOCATION:	Tor Viking II	PROJECT NO.:	150614
UNIT:	Main Engine #2 (SCR On)	PERSONNEL:	MM/MLE
CONDITION:	57% Load		

Field Data Sheet

The table below contains the results of testing and calculations performed by TRC on the date(s) listed.

Moisture & Airflow

RUN NO: **Run 4**
Minutes per point: 5
number of points: 16
OPERATOR: Mossy Meehan/Matt Ellis

POINT NUMBER	TIME	DGM READING INITIAL	VEL. Dp Dp (in. H_2O)	Sqrt Dp Dp	DIFF PRESS. DH	DIFF PRESS. Sqrt.	STACK TEMP. (°F)	DRY GAS METER TEMP (°F) INLET	DRY GAS METER TEMP (°F) OUTLET
A1	0	921.426	0.72	0.849	1.0	1.000	632	76	71
2	5		0.74	0.860	1.0	1.000	632	76	71
3	10		0.78	0.883	1.0	1.000	630	76	70
4	15		0.77	0.877	1.0	1.000	630	75	67
5	20		0.77	0.877	1.0	1.000	634	71	67
6	25		0.68	0.825	1.0	1.000	634	71	67
7	30		0.74	0.860	1.0	1.000	632	72	67
8	35		0.69	0.831			630		
B1	40		0.66	0.812			632		
2	45		0.65	0.806			634		
3	50		0.69	0.831			634		
4	55		0.72	0.849			632		
5	60	957.925	0.75	0.866			632		
6			0.74	0.860			633		
7			0.73	0.854			633		
8			0.73	0.854			633		
A1			0.77	0.877			633		
2			0.79	0.889			634		
3			0.75	0.866			634		
4			0.76	0.872			637		
5			0.76	0.872			635		
6			0.68	0.825			630		
7			0.68	0.825			632		
8			0.67	0.819			630		
B1			0.69	0.831			630		
2			0.73	0.854			631		
3			0.75	0.866			636		
4			0.69	0.831			635		
5			0.65	0.806			639		
6			0.74	0.860			635		
7			0.73	0.854			630		
8			0.68	0.825			630		
	Total	Total	Avg.	Avg.	Avg.	Avg.	Avg.		Avg.
	60.0	36.499	0.721	0.849	1.00	1.000	632.8		71.2

Impinger Gain (for all 3 runs)

impinger 1:	215.0	100.0	115.0
impinger 2:	127.0	100.0	27.0
impinger 3:	4.0	0.0	4.0
impinger 4:	946.0	910.0	36.0
		Net Weight Gain (mL or g):	182.0

M4 Start Time: 1835
M4 Stop Time: 2035

			Avg.
Static Pressure:	-0.15	-0.15	-0.15

TRC Environmental Corp.

EMISSION MEASUREMENTS DEPARTMENT

19874 141st Place N.E.
Woodinville, WA 98072
Phone: (425) 489-1938
Fax: (425) 489-9564

CLIENT:	Shell Offshore, Inc. - Norway	DATE:	5/18/2007
LOCATION:	Tor Viking II	PROJECT NO.:	150614
UNIT:	Main Engine #2 (SCR On)	PERSONNEL:	MM/MLE
CONDITION:	57% Load		

Field Data Sheet

The table below contains the results of testing and calculations performed by TRC on the date(s) listed.

Moisture & Airflow

RUN NO: **Run 5**
Minutes per point: 5
number of points: 16
OPERATOR: Mossy Meehan/Matt Ellis

POINT NUMBER	TIME	DGM READING INITIAL	VEL. Dp Dp (in. H_2O)	Sqrt Dp Dp	DIFF PRESS. DH	DIFF PRESS. Sqrt.	STACK TEMP. (^oF)	DRY GAS METER TEMP (°F) INLET	DRY GAS METER TEMP (°F) OUTLET
A1	0	959.150	0.77	0.877	1.0	1.000	633	73	68
2	5		0.79	0.889	1.0	1.000	634	73	68
3	10		0.75	0.866	1.0	1.000	634	71	67
4	15		0.76	0.872	1.0	1.000	637	73	65
5	20		0.76	0.872	1.0	1.000	635	73	65
6	25		0.68	0.825	1.0	1.000	630	73	65
7	30		0.68	0.825	1.0	1.000	632	74	65
8	35		0.67	0.819			630		
B1	40		0.69	0.831			630		
2	45		0.73	0.854			631		
3	50		0.75	0.866			636		
4	55		0.69	0.831			635		
5	60	995.135	0.65	0.806			639		
6			0.74	0.860			635		
7			0.73	0.854			630		
8			0.68	0.825			630		
A1			0.68	0.825			632		
2			0.78	0.883			632		
3			0.78	0.883			634		
4			0.70	0.837			635		
5			0.55	0.742			635		
6			0.83	0.911			635		
7			0.71	0.843			634		
8			0.74	0.860			632		
B1			0.75	0.866			630		
2			0.78	0.883			631		
3			0.69	0.831			633		
4			0.68	0.825			637		
5			0.77	0.877			632		
6			0.75	0.866			632		
7			0.69	0.831			630		
8			0.68	0.825			630		
	Total	Total	Avg.	Avg.	Avg.	Avg.	Avg.		Avg.
	60.0	35.985	0.721	0.849	1.00	1.000	633.0		69.5

Impinger Gain (for all 3 runs)

impinger 1:	215.0	100.0	115.0
impinger 2:	127.0	100.0	27.0
impinger 3:	4.0	0.0	4.0
impinger 4:	946.0	910.0	36.0
	Net Weight Gain (mL or g):		182.0

M4 Start Time: 2100
M4 Stop Time: 2200

			Avg.
Static Pressure:	-0.15	-0.15	-0.15

TRC Environmental Corp.

EMISSION MEASUREMENTS DEPARTMENT

19874 141st Place N.E.
Woodinville, WA 98072
Phone: (425) 489-1938
Fax: (425) 489-9564

CLIENT:	Shell Offshore, Inc. - Norway	DATE:	5/18/2007
LOCATION:	Tor Viking II	PROJECT NO.:	150614
UNIT:	Main Engine #2 (SCR On)	PERSONNEL:	MM/MLE
CONDITION:	57% Load		

Field Data Sheet

The table below contains the results of testing and calculations performed by TRC on the date(s) listed.

Moisture & Airflow

RUN NO: **Run 6**
Minutes per point: 5
number of points: 16
OPERATOR: Mossy Meehan/Matt Ellis

POINT NUMBER	TIME	DGM READING INITIAL	VEL. Dp Dp (in. H_2O)	Sqrt Dp Dp	DIFF PRESS. DH	DIFF PRESS. Sqrt.	STACK TEMP. (°F)	DRY GAS METER TEMP (°F) INLET	DRY GAS METER TEMP (°F) OUTLET
A1	0	995.605	0.68	0.825	1.0	1.000	632	78	71
2	5		0.78	0.883	1.0	1.000	632	80	71
3	10		0.78	0.883	1.0	1.000	634	80	70
4	15		0.70	0.837	1.0	1.000	635	80	70
5	20		0.55	0.742	1.0	1.000	635	81	69
6	25		0.83	0.911	1.0	1.000	635	81	69
7	30		0.71	0.843			634	81	69
8	35		0.74	0.860			632		
B1	40		0.75	0.866			630		
2	45		0.78	0.883			631		
3	50		0.69	0.831			633		
4	55		0.68	0.825			637		
5	60	1031.704	0.77	0.877			632		
6			0.75	0.866			632		
7			0.69	0.831			630		
8			0.68	0.825			630		
A1			0.70	0.837			630		
2			0.74	0.860			634		
3			0.78	0.883			634		
4			0.78	0.883			637		
5			0.72	0.849			637		
6			0.79	0.889			634		
7			0.78	0.883			632		
8			0.77	0.877			632		
B1			0.70	0.837			633		
2			0.70	0.837			633		
3			0.72	0.849			635		
4			0.72	0.849			635		
5			0.74	0.860			635		
6			0.75	0.866			632		
7			0.75	0.866			630		
8			0.75	0.866			630		
	Total	Total	Avg.	Avg.	Avg.	Avg.	Avg.		Avg.
	60.0	36.099	0.733	0.856	1.00	1.000	633.0		75.0

Impinger Gain (for all 3 runs)

impinger 1:	215.0	100.0	115.0
impinger 2:	127.0	100.0	27.0
impinger 3:	4.0	0.0	4.0
impinger 4:	946.0	910.0	36.0
	Net Weight Gain (mL or g):		182.0

M4 Start Time: 2215
M4 Stop Time: 2315

			Avg.
Static Pressure:	-0.15	-0.15	-0.15

TRC Environmental Corp.

EMISSION MEASUREMENTS DEPARTMENT

19874 141st Place N.E.
Woodinville, WA 98072
Phone: (425) 489-1938
Fax: (425) 489-9564

CLIENT:	Shell Offshore, Inc. - Norway	DATE:	05/18/07
LOCATION:	Tor Viking II	PROJECT NO.:	150614
UNIT:	Main Engine #2 (SCR On)	PERSONNEL:	MM/MLE
CONDITION:	57% Load		

REPORTING SHEET

The table below contains the results of testing and calculations performed by TRC on the date(s) listed.

Emissions Calculations - Measured

Method 7E - Nitrogen Oxides (NO_x)

Parameter	SYMBOL	UNITS	DATA			
Test Number			Run 4	Run 5	Run 6	AVG
Test Date			5/18/2007	5/18/2007	5/18/2007	
Start Time			1933	2059	2213	
Stop Time			2033	2159	2313	
Calculated Data						
Stack Gas Oxygen Content	O_2	%	13.6	13.6	13.7	13.6
Moisture Fraction, Bws = Vw(Std)/(Vm (Std)+Vw(Std))	Bws	none	7.53%	7.53%	7.53%	7.53%
Dry Stack Gas Flow Rate (DRY, STP),	Qsd	dscf/min	7,618.7	7,615.4	7,676.1	7,636.8
Qsd = 17.647 * Q * (1-Bws)* (Ps/Ts)		dscm/min	215.7	215.6	217.3	216.2
Method 19 Fuel Factor for Diesel Oil		dscf/MMBtu	9,190	9,190	9,190	9,190
Diesel Fuel Useage		L/hr	389	387	390	389
Diesel Fuel Useage		gal/hr	102.8	102.2	103.0	102.7
Gaseous Constituents						
Nitrogen Oxides (NO_x)						
NO_x Emission Concentration (dry)	ppm	NO_x	92.3	94.7	96.0	94.3
NO_x Emission Rate	lb/hr	NO_x	5.04	5.17	5.28	5.16
NO_x Emission Rate	lb/MMBtu	NO_x	0.2900	0.2975	0.3058	0.2977
NO_x Emission Rate	lb/gal	NO_x	0.0490	0.0505	0.0512	0.0503

TEST DATA SUMMARIES

Shell Offshore, Inc. - Norway
Tor Viking II
Main Engine #2 (SCR On)
35% Load

Moisture & Airflow

Test Dates: 5/18-19/2007

	Run 7	Run 8	Run 9
Dates:	5/18-19/2007	5/19/2007	5/19/2007
Barometric Pressure at Ref. Bar. (in. Hg):	29.90	29.90	29.90
Height of Sampling Location Above Ref. Bar. (ft):	0.00	0.00	0.00
Barometric Pressure at Sampling Location:	**29.90**	**29.90**	**29.90**

TABLE OF CONTENTS:

Data Sheet
Calculation Sheet
Run Sheet - Run 7
Run Sheet - Run 8
Run Sheet - Run 9
NO_x

Sampling Data Summary

Parameter	Run 7	Run 8	Run 9	Average
Total Sampling Time, Min.	60	60	60	60
Stack Gas Oxygen Content, O_2%	13.6	13.6	13.6	13.6
Stack Gas Carbon Dioxide Content, CO_2%	5.6	5.6	5.6	5.6
Gas Sample Volume at Standard Conditions, cu. ft.	34.332	34.533	46.609	38.492
cu. m.	0.972	0.978	1.320	1.090
Dry Stack Gas Flow Rate (Dry, STP), dscf/min	4,133.3	4,121.1	3,949.4	4067.9
dscm/min	117.0	116.7	111.8	115.2

Project Number: 150614

TRC Environmental Corp.

EMISSION MEASUREMENTS DEPARTMENT

19874 141st Place N.E.
Woodinville, WA 98072
Phone: (425) 489-1938
Fax: (425) 489-9564

CLIENT:	Shell Offshore, Inc. - Norway	DATES:	5/18-19/2007
LOCATION:	Tor Viking II	PROJECT NO.:	150614
UNIT:	Main Engine #2 (SCR On)	PERSONNEL:	MM/MLE
CONDITION:	35% Load		

Data Input Sheet

The table below contains the results of testing and calculations performed by TRC on the date(s) listed.

Moisture & Airflow

Parameter	SYMBOL	UNITS	DATA			
Test Number			Run 7	Run 8	Run 9	
Test Date			5/18-19/2007	5/19/2007	5/19/2007	
Method 4 Start Time			2330	0045	0200	
Method 4 Stop Time			2430	0145	0300	**3-RUN AVG.**
Stack Diameter	ds	inches	27.5	27.5	27.5	
Barometric Pressure at Sampling Location	Pbar	in. Hg	29.90	29.90	29.90	29.90
Stack Static Pressure	Pg	in. H_2O	-0.18	-0.18	-0.18	-0.18
Pitot Coefficient	cp	none	0.84	0.84	0.84	
Meter Calibration Factor	Y	none	0.976	0.976	0.976	
	DH@	none	1.678	1.678	1.678	
Stack Gas Oxygen Content	O_2	%	13.6	13.6	13.6	13.6
Stack Gas Carbon Dioxide Content	CO_2	%	5.6	5.6	5.6	5.6
Net Moisture Gain (Impingers w/SiGel)	Ww	grams	143.0	143.0	143.0	143.0
Average Stack Temperature	ts	deg F	674.7	675.1	674.6	674.8
Average Meter Temperature	tm	deg F	67.6	75.1	76.4	73.0
Avg Delta H	dH	in. H_2O	1.00	1.00	1.80	1.27
Average Square Root Delta H	ASR dH	in. H_2O	1.000	1.000	1.342	1.114
Avg Velocity Head	dP	in. H_2O	0.21	0.21	0.20	0.21
Average Square Root Delta P	ASR dP	in. H_2O	0.461	0.460	0.441	0.454
Gas Sample Volume	Vm	cu. ft.	35.090	35.797	48.330	39.739
Total Sampling Time	min	minutes	60	60	60	

TRC Environmental Corp.

EMISSION MEASUREMENTS DEPARTMENT

19874 141st Place N.E.
Woodinville, WA 98072
Phone: (425) 489-1938
Fax: (425) 489-9564

CLIENT:	Shell Offshore, Inc. - Norway	DATES:	5/18-19/2007
LOCATION:	Tor Viking II	PROJECT NO.:	150614
UNIT:	Main Engine #2 (SCR On)	PERSONNEL:	MM/MLE
CONDITION: 35% Load			

Calculation Sheet

The table below contains the results of testing and calculations performed by TRC on the date(s) listed.

Moisture & Airflow

Parameter	SYMBOL	UNITS	DATA			
Test Number			Run 7	Run 8	Run 9	
Test Date			5/18-19/2007	5/19/2007	5/19/2007	
Method 4 Start Time:			2330	0045	0200	
Method 4 Stop Time:			2430	0145	0300	
Calculated Data						**3-RUN AVG.**
Stack Area,As=3.14159*((Ds/12)/2)^2	As	sq.ft.	4.12	4.12	4.12	4.12
Avg Stack Temperature, Ts=ts+460	Ts	deg R	1134.7	1135.1	1134.6	1134.8
Meter Pressure, Pm=Pb+Dh/13.6	Pm	in. Hg	29.97	29.97	30.03	29.99
Avg Meter Temperature, Tm=tm+460	Tm	deg R	527.6	535.1	536.4	533.0
Gas Sample Volume at Standard Conditions,	Vm(std)	cu. ft.	34.332	34.533	46.609	38.492
Vm(std)= 528/29.92*Y*Vm*Pm/Tm		cu. m.	0.972	0.978	1.320	1.090
Net Moisture Gain (Impingers)	Ww	mL	119.0	119.0	119.0	119.0
Net Moisture Gain (Impinger w/SiGel)	Ww	grams	24.0	24.0	24.0	24.0
Volume of Water Vapor, Vw(std)= 0.04715*Wlc	Vw(std)	cu. ft.	6.742	6.742	6.742	6.742
Moisture Fraction, Bws = Vw(Std)/(Vm(Std)+Vw(Std))*100	Bws	%	5.52%	5.52%	5.52%	5.52%
Dry Stack Gas Molecular Weight, Md = (0.32*O2)+(0.44*CO2)+(0.28*(100-(O2+CO2)))	Mwd	g/g-mole	29.44	29.44	29.44	29.44
Wet Stack Gas Molecular Weight Mw = Md* (1-Bws)+(18*(Bws))	Mws	g/g-mole	28.81	28.81	28.81	28.81
Absolute Stack Pressure, Ps = Pbar + Pg/13.6	Ps	in. Hg.	29.89	29.89	29.89	29.89
Stack Gas Velocity						
Vs= 85.49*Cp*ASRdP*((Ts)/((Ps)*(Mw)))^0.5	Vs	ft/sec	38.03	37.93	36.33	37.43
Vsm = 0.3048* Vs	Vsm	m/sec	11.59	11.56	11.07	11.41
Actual Stack Gas Flow Rate, Qa = 60*Vs*As	Qa	acf/min	9,411.6	9,387.4	8,992.0	9,263.7
Stack Gas Flow Rate (STP), Qsw = 528/29.92 * Qa * (Ps/Ts)	Qsw	scf/min	4,374.6	4,361.7	4,180.0	4,305.4
Dry Stack Gas Flow Rate (Dry, STP),	Qsd	dscf/min	4,133.3	4,121.1	3,949.4	4,067.9
Qsd = 528/29.92 * Qa * (1-Bws)* (Ps/Ts)		dscm/min	117.0	116.7	111.8	115.2

Sampling Data Summary

Parameter	SYMBOL	UNITS	Run 7	Run 8	Run 9	3-RUN AVG.
Total Sampling Time	min	minutes	60	60	60	60
Stack Gas Oxygen Content	O_2	%	13.6	13.6	13.6	13.6
Stack Gas Carbon Dioxide Content	CO_2	%	5.6	5.6	5.6	5.6
Gas Sample Volume at Standard Conditions,	Vm(std)	cu. ft.	34.332	34.533	46.609	38.492
		cu. m.	0.972	0.978	1.320	1.090
Dry Stack Gas Flow Rate (Dry, STP),	Qsd	dscf/min	4,133.3	4,121.1	3,949.4	4,067.9
		dscm/min	117.0	116.7	111.8	115.2

TRC Environmental Corp

EMISSION MEASUREMENTS DEPARTMENT

19874 141st Place N.E.
Woodinville, WA 98072
Phone: (425) 489-1938
Fax: (425) 489-9564

CLIENT:	Shell Offshore, Inc. - Norway	DATE:	5/18-19/2007
LOCATION:	Tor Viking II	PROJECT NO.:	150614
UNIT:	Main Engine #2 (SCR On)	PERSONNEL:	MM/MLE
CONDITION:	35% Load		

Field Data Sheet

The table below contains the results of testing and calculations performed by TRC on the date(s) listed.

Moisture & Airflow

RUN NO: **Run 7**
Minutes per point: 5
number of points: 16
OPERATOR: Mossy Meehan/Matt Ellis

POINT NUMBER	TIME	DGM READING INITIAL	VEL. Dp Dp (in. H_2O)	Sqrt Dp Dp	DIFF PRESS. DH	DIFF PRESS. Sqrt.	STACK TEMP. (°F)	DRY GAS METER TEMP (°F) INLET	DRY GAS METER TEMP (°F) OUTLET
A1	0	32.350	0.23	0.480	1.0	1.000	675	72	63
2	5		0.22	0.469	1.0	1.000	675	72	63
3	10		0.22	0.469	1.0	1.000	674	72	63
4	15		0.19	0.436	1.0	1.000	677	73	63
5	20		0.19	0.436	1.0	1.000	673	73	63
6	25		0.18	0.424	1.0	1.000	672	72	63
7	30		0.19	0.436	1.0	1.000	670	72	63
8	35		0.24	0.490			670		
B1	40		0.19	0.436			678		
2	45		0.24	0.490			679		
3	50		0.22	0.469			677		
4	55		0.19	0.436			672		
5	60	67.440	0.20	0.447			672		
6			0.24	0.490			672		
7			0.18	0.424			674		
8			0.18	0.424			675		
A1			0.24	0.490			675		
2			0.23	0.480			675		
3			0.20	0.447			678		
4			0.19	0.436			678		
5			0.18	0.424			676		
6			0.18	0.424			676		
7			0.25	0.500			673		
8			0.22	0.469			674		
B1			0.22	0.469			670		
2			0.25	0.500			675		
3			0.22	0.469			675		
4			0.22	0.469			675		
5			0.23	0.480			677		
6			0.23	0.480			677		
7			0.23	0.480			678		
8			0.24	0.490			673		
	Total	Total	Avg.	Avg.	Avg.	Avg.	Avg.		Avg.
	60.0	35.090	0.213	0.461	1.00	1.000	674.7		67.6

Impinger Gain (for all 3 runs)

impinger 1:	201.0	100.0	101.0
impinger 2:	115.0	100.0	15.0
impinger 3:	3.0	0.0	3.0
impinger 4:	876.0	852.0	24.0
	Net Weight Gain (mL or g):		143.0

M4 Start Time: 2330
M4 Stop Time: 2430

			Avg.
Static Pressure:	-0.18	-0.18	-0.18

TRC Environmental Corp.

EMISSION MEASUREMENTS DEPARTMENT

19874 141st Place N.E.
Woodinville, WA 98072
Phone: (425) 489-1938
Fax: (425) 489-9564

CLIENT:	Shell Offshore, Inc. - Norway	DATE:	5/19/2007
LOCATION:	Tor Viking II	PROJECT NO.:	150614
UNIT:	Main Engine #2 (SCR On)	PERSONNEL:	MM/MLE
CONDITION:	35% Load		

Field Data Sheet

The table below contains the results of testing and calculations performed by TRC on the date(s) listed.

Moisture & Airflow

RUN NO: **Run 8**
Minutes per point: 5
number of points: 16
OPERATOR: Mossy Meehan/Matt Ellis

POINT NUMBER	TIME	DGM READING INITIAL	VEL. Dp Dp (in. H_2O)	Sqrt Dp Dp	DIFF PRESS. DH	DIFF PRESS. Sqrt.	STACK TEMP. (^oF)	DRY GAS METER TEMP (^oF) INLET	DRY GAS METER TEMP (^oF) OUTLET
A1	0	68.590	0.24	0.490	1.0	1.000	675	80	71
2	5		0.23	0.480	1.0	1.000	675	80	71
3	10		0.20	0.447	1.0	1.000	678	80	70
4	15		0.19	0.436	1.0	1.000	678	79	70
5	20		0.18	0.424	1.0	1.000	676	79	70
6	25		0.18	0.424	1.0	1.000	676	81	70
7	30		0.25	0.500	1.0	1.000	673	81	70
8	35		0.22	0.469			674		
B1	40		0.22	0.469			670		
2	45		0.25	0.500			675		
3	50		0.22	0.469			675		
4	55		0.22	0.469			675		
5	60	104.387	0.23	0.480			677		
6			0.23	0.480			677		
7			0.23	0.480			678		
8			0.24	0.490			673		
A1			0.23	0.480			673		
2			0.20	0.447			673		
3			0.19	0.436			675		
4			0.20	0.447			675		
5			0.23	0.480			674		
6			0.21	0.458			675		
7			0.21	0.458			679		
8			0.22	0.469			677		
B1			0.18	0.424			675		
2			0.17	0.412			675		
3			0.20	0.447			675		
4			0.19	0.436			676		
5			0.22	0.469			676		
6			0.23	0.480			674		
7			0.19	0.436			674		
8			0.19	0.436			673		
	Total	Total	Avg.	Avg.	Avg.	Avg.	Avg.		Avg.
	60.0	35.797	0.212	0.460	1.00	1.000	675.1		75.1

Impinger Gain (for all 3 runs)

impinger 1:	201.0	100.0	101.0
impinger 2:	115.0	100.0	15.0
impinger 3:	3.0	0.0	3.0
impinger 4:	876.0	852.0	24.0
	Net Weight Gain (mL or g):		143.0

M4 Start Time: 0045
M4 Stop Time: 0145

			Avg.
Static Pressure:	-0.18	-0.18	-0.18

TRC Environmental Corp.

EMISSION MEASUREMENTS DEPARTMENT

19874 141st Place N.E.
Woodinville, WA 98072
Phone: (425) 489-1938
Fax: (425) 489-9564

CLIENT:	Shell Offshore, Inc. - Norway	DATE:	5/19/2007
LOCATION:	Tor Viking II	PROJECT NO.:	150614
UNIT:	Main Engine #2 (SCR On)	PERSONNEL:	MM/MLE
CONDITION:	35% Load		

Field Data Sheet

The table below contains the results of testing and calculations performed by TRC on the date(s) listed.

Moisture & Airflow

RUN NO: **Run 9**
Minutes per point: 5
number of points: 16
OPERATOR: Mossy Meehan/Matt Ellis

POINT NUMBER	TIME	DGM READING INITIAL	VEL. Dp Dp (in. H_2O)	Sqrt Dp Dp	DIFF PRESS. DH	DIFF PRESS. Sqrt.	STACK TEMP. (^oF)	DRY GAS METER TEMP (^oF) INLET	DRY GAS METER TEMP (^oF) OUTLET
A1	0	106.320	0.23	0.480	1.8	1.342	673	81	71
2	5		0.20	0.447	1.8	1.342	673	81	71
3	10		0.19	0.436	1.8	1.342	675	82	71
4	15		0.20	0.447	1.8	1.342	675	82	71
5	20		0.23	0.480	1.8	1.342	674	82	71
6	25		0.21	0.458	1.8	1.342	675	82	71
7	30		0.21	0.458	1.8	1.342	679	82	71
8	35		0.22	0.469			677		
B1	40		0.18	0.424			675		
2	45		0.17	0.412			675		
3	50		0.20	0.447			675		
4	55		0.19	0.436			676		
5	60	154.650	0.22	0.469			676		
6			0.23	0.480			674		
7			0.19	0.436			674		
8			0.19	0.436			673		
A1			0.19	0.436			675		
2			0.18	0.424			675		
3			0.23	0.480			676		
4			0.23	0.480			676		
5			0.25	0.500			676		
6			0.22	0.469			674		
7			0.22	0.469			672		
8			0.20	0.447			672		
B1			0.20	0.447			672		
2			0.20	0.447			672		
3			0.20	0.447			675		
4			0.20	0.447			675		
5			0.10	0.316			674		
6			0.10	0.316			674		
7			0.20	0.447			675		
8			0.10	0.316			674		
	Total	Total	Avg.	Avg.	Avg.	Avg.	Avg.		Avg.
	60.0	48.330	0.196	0.441	1.80	1.342	674.6		76.4

Impinger Gain (for all 3 runs)

impinger 1:	201.0	100.0	101.0
impinger 2:	115.0	100.0	15.0
impinger 3:	3.0	0.0	3.0
impinger 4:	876.0	852.0	24.0
	Net Weight Gain (mL or g):		143.0

M4 Start Time: 0200
M4 Stop Time: 0300

			Avg.
Static Pressure:	-0.18	-0.18	-0.18

TRC Environmental Corp.

EMISSION MEASUREMENTS DEPARTMENT

19874 141st Place N.E.
Woodinville, WA 98072
Phone: (425) 489-1938
Fax: (425) 489-9564

CLIENT:	Shell Offshore, Inc. - Norway	DATE:	5/18-19/2007
LOCATION:	Tor Viking II	PROJECT NO.:	150614
UNIT:	Main Engine #2 (SCR On)	PERSONNEL:	MM/MLE
CONDITION:	35% Load		

REPORTING SHEET

The table below contains the results of testing and calculations performed by TRC on the date(s) listed.

Emissions Calculations - Measured

Method 7E - Nitrogen Oxides (NO_x)

Parameter	SYMBOL	UNITS	DATA			
Test Number			Run 7	Run 8	Run 9	AVG
Test Date			5/18-19/2007	5/19/2007	5/19/2007	
Start Time			2332	0045	0159	
Stop Time			0032	0145	0259	
Calculated Data						
Stack Gas Oxygen Content	O_2	%	13.6	13.6	13.6	13.6
Moisture Fraction, Bws = Vw(Std)/(Vm (Std)+Vw(Std))	Bws	none	5.52%	5.52%	5.52%	5.52%
Dry Stack Gas Flow Rate (DRY, STP),	Qsd	dscf/min	4,133.3	4,121.1	3,949.4	4,067.9
Qsd = 17.647 * Q * (1-Bws)* (Ps/Ts)		dscm/min	117.0	116.7	111.8	115.2
Method 19 Fuel Factor for Diesel Oil		dscf/MMBtu	9,190	9,190	9,190	9,190
Diesel Fuel Useage		L/hr	207	209	210	209
Diesel Fuel Useage		gal/hr	54.7	55.2	55.5	55.1
Gaseous Constituents						
Nitrogen Oxides (NO_x)						
NO_x Emission Concentration (dry)	ppm	NO_x	95.8	93.8	78.3	89.3
NO_x Emission Rate	lb/hr	NO_x	2.84	2.77	2.22	2.61
NO_x Emission Rate	lb/MMBtu	NO_x	0.3010	0.2947	0.2460	0.2805
NO_x Emission Rate	lb/gal	NO_x	0.0519	0.0502	0.0399	0.0473

Main Engine #2 - *SCR On* Operational Data
May 18-19, 2007

Date	Time	Load (%)	SCR Parameters L/hr	SCR Parameters Stack Temp (°C)	Fuel Flow (L/hr)	
18-May	1550	80%	43.9	300	604	
	1620	80%	44.6	289/298	601	Run 1 - 1553-1653 80% Load 601 L/hr
	1650	80%	45.1	289/300	600	
	1705	80%	43.9	289/300	600	
	1735	80%	43.8	287/298	603	Run 2 - 1708-1808 80% Load 604 L/hr
	1805	80%	43.9	287/298	604	
	1820	80%	43.7	287/298	605	
	1850	80%	43.9	282/299	608	Run 3 - 1821-1921 80% Load 498 L/hr
	1920	80%	43.9	282/299	388	
	1935	57%	29.7	306/320	389	Run 4 - 1933-2033 57% Load 389 L/hr
	2005	57%	29.8	305/321	389	
	2035	57%	29.7	305/320	389	
	2100	57%	29.7	306/321	387	Run 5 - 2059-2159 57% Load 387 L/hr
	2130	57%	29.8	305/321	386	
	2200	57%	29.7	307/321	389	
	2215	57%	29.7	307/322	389	Run 6 - 2213-2313 57% Load 390 L/hr
	2245	57%	29.8	309/321	390	
	2315	57%	29.7	307/321	390	
	2330	35%	10.9	321/330	206	
19-May	0000	35%	10.8	322/328	207	Run 7 - 2332-0032 35% Load 207 L/hr
	0030	35%	10.7	322/328	206	
	0045	35%	10.8	326/325	210	Run 8 - 0045-0145 35% Load 209 L/hr
	0115	35%	10.7	327/338	209	
	0145	35%	10.8	327/338	209	
	0200	35%	10.9	330/339	209	Run 9 - 0159-0259 35% Load 210 L/hr
	0230	35%	10.8	329/340	210	
	0300	35%	10.9	328/342	209	

Recorded by: Paul Clark, TRC

TEST DATA SUMMARIES

Shell Offshore, Inc. - Norway
Tor Viking II
Main Engine #2 (SCR Off)
35% Load

Moisture & Airflow

Test Dates: 5/18/2007

	Run 1	Run 2	Run 3
Dates:	5/18/2007	5/18/2007	5/18/2007
Barometric Pressure at Ref. Bar. (in. Hg):	29.90	29.90	29.90
Height of Sampling Location Above Ref. Bar. (ft):	0.00	0.00	0.00
Barometric Pressure at Sampling Location:	**29.90**	**29.90**	**29.90**

TABLE OF CONTENTS:

Data Sheet
Calculation Sheet
Run Sheet - Run 1
Run Sheet - Run 2
Run Sheet - Run 3
NO_x

Sampling Data Summary

Parameter	Run 1	Run 2	Run 3	Average
Total Sampling Time, Min.	60	60	60	60
Stack Gas Oxygen Content, O_2%	13.9	13.8	13.6	13.8
Stack Gas Carbon Dioxide Content, CO_2%	5.3	5.4	5.5	5.4
Gas Sample Volume at Standard Conditions, cu. ft.	36.082	35.061	36.477	35.874
cu. m.	1.021	0.993	1.033	1.016
Dry Stack Gas Flow Rate (Dry, STP), dscf/min	4,531.1	4,508.9	4,377.9	4472.6
dscm/min	128.3	127.6	123.9	126.6

Project Number: 150614

TRC Environmental Corp.

EMISSION MEASUREMENTS DEPARTMENT

19874 141st Place N.E.
Woodinville, WA 98072
Phone: (425) 489-1938
Fax: (425) 489-9564

CLIENT:	Shell Offshore, Inc. - Norway	DATES:	5/18/2007
LOCATION:	Tor Viking II	PROJECT NO.:	150614
UNIT:	Main Engine #2 (SCR Off)	PERSONNEL:	MM/MLE
CONDITION:	35% Load		

Data Input Sheet

The table below contains the results of testing and calculations performed by TRC on the date(s) listed.

Moisture & Airflow

Parameter	SYMBOL	UNITS	DATA			
Test Number			Run 1	Run 2	Run 3	
Test Date			5/18/2007	5/18/2007	5/18/2007	
Method 4 Start Time			0118	0315	0430	
Method 4 Stop Time			0218	0415	0530	**3-RUN AVG.**
Stack Diameter	ds	inches	27.5	27.5	27.5	
Barometric Pressure at Sampling Location	Pbar	in. Hg	29.90	29.90	29.90	29.90
Stack Static Pressure	Pg	in. H_2O	0.12	0.12	0.12	0.12
Pitot Coefficient	cp	none	0.84	0.84	0.84	
Meter Calibration Factor	Y	none	0.976	0.976	0.976	
	DH@	none	1.678	1.678	1.678	
Stack Gas Oxygen Content	O_2	%	13.9	13.8	13.6	13.8
Stack Gas Carbon Dioxide Content	CO_2	%	5.3	5.4	5.5	5.4
Net Moisture Gain (Impingers w/SiGel)	Ww	grams	49.5	39.5	52.0	47.0
Average Stack Temperature	ts	deg F	650.6	650.3	648.8	649.9
Average Meter Temperature	tm	deg F	51.9	50.9	49.0	50.6
Avg Delta H	dH	in. H_2O	1.00	1.00	1.00	1.00
Average Square Root Delta H	ASR dH	in. H_2O	1.000	1.000	1.000	1.000
Avg Velocity Head	dP	in. H_2O	0.25	0.25	0.24	0.24
Average Square Root Delta P	ASR dP	in. H_2O	0.502	0.495	0.486	0.495
Gas Sample Volume	Vm	cu. ft.	35.775	34.700	35.965	35.480
Total Sampling Time	min	minutes	60	60	60	

TRC Environmental Corp.

EMISSION MEASUREMENTS DEPARTMENT

19874 141st Place N.E.
Woodinville, WA 98072
Phone: (425) 489-1938
Fax: (425) 489-9564

CLIENT:	Shell Offshore, Inc. - Norway	DATES:	5/18/2007
LOCATION:	Tor Viking II	PROJECT NO.:	150614
UNIT:	Main Engine #2 (SCR Off)	PERSONNEL:	MM/MLE
CONDITION: 35% Load			

Calculation Sheet

The table below contains the results of testing and calculations performed by TRC on the date(s) listed.

Moisture & Airflow

Parameter	SYMBOL	UNITS	DATA			
Test Number			Run 1	Run 2	Run 3	
Test Date			5/18/2007	5/18/2007	5/18/2007	
Method 4 Start Time:			0118	0315	0430	
Method 4 Stop Time:			0218	0415	0530	
Calculated Data						**3-RUN AVG.**
Stack Area,As=3.14159*((Ds/12)/2)^2	As	sq.ft.	4.12	4.12	4.12	4.12
Avg Stack Temperature, Ts=ts+460	Ts	deg R	1110.6	1110.3	1108.8	1109.9
Meter Pressure, Pm=Pb+Dh/13.6	Pm	in. Hg	29.97	29.97	29.97	29.97
Avg Meter Temperature, Tm=tm+460	Tm	deg R	511.9	510.9	509.0	510.6
Gas Sample Volume at Standard Conditions,	Vm(std)	cu. ft.	36.082	35.061	36.477	35.874
Vm(std)= 528/29.92*Y*Vm*Pm/Tm		cu. m.	1.021	0.993	1.033	1.016
Net Moisture Gain (Impingers w/SiGel)	Ww	grams	49.5	39.5	52.0	47.0
Volume of Water Vapor, Vw(std)= 0.04715*Wlc	Vw(std)	cu. ft.	2.334	1.862	2.452	2.216
Moisture Fraction, Bws = Vw(Std)/(Vm(Std)+Vw(Std))*100	Bws	%	6.08%	5.04%	6.30%	5.81%
Dry Stack Gas Molecular Weight, Md = (0.32*O2)+(0.44*CO2)+(0.28*(100-(O2+CO2)))	Mwd	g/g-mole	29.40	29.42	29.42	29.41
Wet Stack Gas Molecular Weight Mw = Md* (1-Bws)+(18*(Bws))	Mws	g/g-mole	28.71	28.84	28.70	28.75
Absolute Stack Pressure, Ps = Pbar + Pg/13.6	Ps	in. Hg.	29.91	29.91	29.91	29.91
Stack Gas Velocity Vs= 85.49*Cp*ASRdP*((Ts)/((Ps)*(Mw)))^0.5	Vs	ft/sec	41.02	40.36	39.66	40.35
Vsm = 0.3048* Vs	Vsm	m/sec	12.50	12.30	12.09	12.30
Actual Stack Gas Flow Rate, Qa = 60*Vs*As	Qa	acf/min	10,150.9	9,988.4	9,814.8	9,984.7
Stack Gas Flow Rate (STP), Qsw = 528/29.92 * Qa * (Ps/Ts)	Qsw	scf/min	4,824.2	4,748.4	4,672.2	4,748.3
Dry Stack Gas Flow Rate (Dry, STP),	Qsd	dscf/min	4,531.1	4,508.9	4,377.9	4,472.6
Qsd = 528/29.92 * Qa * (1-Bws)* (Ps/Ts)		dscm/min	128.3	127.6	123.9	126.6

Sampling Data Summary

Parameter	SYMBOL	UNITS	Run 1	Run 2	Run 3	3-RUN AVG.
Total Sampling Time	min	minutes	60	60	60	60
Stack Gas Oxygen Content	O_2	%	13.9	13.8	13.6	13.8
Stack Gas Carbon Dioxide Content	CO_2	%	5.3	5.4	5.5	5.4
Gas Sample Volume at Standard Conditions,	Vm(std)	cu. ft.	36.082	35.061	36.477	35.874
		cu. m.	1.021	0.993	1.033	1.016
Dry Stack Gas Flow Rate (Dry, STP),	Qsd	dscf/min	4,531.1	4,508.9	4,377.9	4,472.6
		dscm/min	128.3	127.6	123.9	126.6

TRC Environmental Corp

EMISSION MEASUREMENTS DEPARTMENT

19874 141st Place N.E.
Woodinville, WA 98072
Phone: (425) 489-1938
Fax: (425) 489-9564

CLIENT:	Shell Offshore, Inc. - Norway	DATE:	5/18/2007
LOCATION:	Tor Viking II	PROJECT NO.:	150614
UNIT:	Main Engine #2 (SCR Off)	PERSONNEL:	MM/MLE
CONDITION:	35% Load		

Field Data Sheet

The table below contains the results of testing and calculations performed by TRC on the date(s) listed.

Moisture & Airflow

RUN NO: **Run 1**
Minutes per point: 5
number of points: 16
OPERATOR: Mossy Meehan/Matt Ellis

POINT NUMBER	TIME	DGM READING INITIAL	VEL. Dp Dp (in. H_2O)	Sqrt Dp Dp	DIFF PRESS. DH	DIFF PRESS. Sqrt.	STACK TEMP. (°F)	DRY GAS METER TEMP (°F) INLET	DRY GAS METER TEMP (°F) OUTLET
A1	0	450.685	0.24	0.490	1.0	1.000	652	54	48
2	5		0.24	0.490	1.0	1.000	650	54	48
3	10		0.23	0.480	1.0	1.000	648	54	48
4	15		0.23	0.480	1.0	1.000	647	54	51
5	20		0.25	0.500	1.0	1.000	647	54	51
6	25		0.28	0.529	1.0	1.000	652	54	51
7	30		0.28	0.529	1.0	1.000	649	54	51
8	35		0.24	0.490			646		
B1	40		0.24	0.490			649		
2	45		0.28	0.529			647		
3	50		0.24	0.490			652		
4	55		0.23	0.480			650		
5	60	486.460	0.27	0.520			653		
6			0.27	0.520			653		
7			0.24	0.490			647		
8			0.24	0.490			649		
A1			0.26	0.510			649		
2			0.28	0.529			648		
3			0.27	0.520			650		
4			0.25	0.500			649		
5			0.23	0.480			655		
6			0.25	0.500			653		
7			0.27	0.520			653		
8			0.25	0.500			652		
B1			0.24	0.490			650		
2			0.26	0.510			652		
3			0.26	0.510			647		
4			0.24	0.490			650		
5			0.25	0.500			654		
6			0.25	0.500			655		
7			0.27	0.520			655		
8			0.25	0.500			656		
	Total	Total	Avg.	Avg.	Avg.	Avg.	Avg.		Avg.
	60.0	35.775	0.253	0.502	1.00	1.000	650.6		51.9

Impinger Gain

impinger 1:	797.5	758.0	39.5
impinger 2:	770.0	767.5	2.5
impinger 3:	615.0	614.0	1.0
impinger 4:	860.0	853.5	6.5
	Net Weight Gain (grams):		49.5

M4 Start Time: 0118
M4 Stop Time: 0218

			Avg.
Static Pressure:	0.12	0.12	0.12

TRC Environmental Corp.

EMISSION MEASUREMENTS DEPARTMENT

19874 141st Place N.E.
Woodinville, WA 98072
Phone: (425) 489-1938
Fax: (425) 489-9564

CLIENT:	Shell Offshore, Inc. - Norway	DATE:	5/18/2007
LOCATION:	Tor Viking II	PROJECT NO.:	150614
UNIT:	Main Engine #2 (SCR Off)	PERSONNEL:	MM/MLE
CONDITION:	35% Load		

Field Data Sheet

The table below contains the results of testing and calculations performed by TRC on the date(s) listed.

Moisture & Airflow

RUN NO: **Run 2**
Minutes per point: 5
number of points: 16
OPERATOR: Mossy Meehan/Matt Ellis

POINT NUMBER	TIME	DGM READING INITIAL	VEL. Dp Dp (in. H_2O)	Sqrt Dp Dp	DIFF PRESS. DH	DIFF PRESS. Sqrt.	STACK TEMP. (^oF)	DRY GAS METER TEMP (°F) INLET	DRY GAS METER TEMP (°F) OUTLET
A1	0	486.682	0.26	0.510	1.0	1.000	649	52	47
2	5		0.28	0.529	1.0	1.000	648	53	47
3	10		0.27	0.520	1.0	1.000	650	54	49
4	15		0.25	0.500	1.0	1.000	649	54	49
5	20		0.23	0.480	1.0	1.000	655	54	49
6	25		0.25	0.500	1.0	1.000	653	53	49
7	30		0.27	0.520	1.0	1.000	653	54	49
8	35		0.25	0.500			652		
B1	40		0.24	0.490			650		
2	45		0.26	0.510			652		
3	50		0.26	0.510			647		
4	55		0.24	0.490			650		
5	60	521.382	0.25	0.500			654		
6			0.25	0.500			655		
7			0.27	0.520			655		
8			0.25	0.500			656		
A1			0.25	0.500			648		
2			0.25	0.500			650		
3			0.23	0.480			650		
4			0.24	0.490			649		
5			0.23	0.480			649		
6			0.23	0.480			647		
7			0.24	0.490			647		
8			0.24	0.490			649		
B1			0.24	0.490			651		
2			0.24	0.490			647		
3			0.23	0.480			648		
4			0.23	0.480			649		
5			0.25	0.500			652		
6			0.22	0.469			649		
7			0.22	0.469			647		
8			0.24	0.490			648		
	Total	Total	Avg.	Avg.	Avg.	Avg.	Avg.		Avg.
	60.0	34.700	0.246	0.495	1.00	1.000	650.3		50.9

Impinger Gain

impinger 1:	821.0	797.5	23.5
impinger 2:	773.0	770.0	3.0
impinger 3:	616.0	615.0	1.0
impinger 4:	872.0	860.0	12.0
	Net Weight Gain (grams):		39.5

M4 Start Time: 0315
M4 Stop Time: 0415

			Avg.
Static Pressure:	0.12	0.12	0.12

TRC Environmental Corp.

EMISSION MEASUREMENTS DEPARTMENT

19874 141st Place N.E.
Woodinville, WA 98072
Phone: (425) 489-1938
Fax: (425) 489-9564

CLIENT:	Shell Offshore, Inc. - Norway	DATE:	5/18/2007
LOCATION:	Tor Viking II	PROJECT NO.:	150614
UNIT:	Main Engine #2 (SCR Off)	PERSONNEL:	MM/MLE
CONDITION:	35% Load		

Field Data Sheet

The table below contains the results of testing and calculations performed by TRC on the date(s) listed.

Moisture & Airflow

RUN NO: **Run 3**
Minutes per point: 5
number of points: 16
OPERATOR: Mossy Meehan/Matt Ellis

POINT NUMBER	TIME	DGM READING INITIAL	VEL. Dp Dp (in. H_2O)	Sqrt Dp Dp	DIFF PRESS. DH	DIFF PRESS. Sqrt.	STACK TEMP. (°F)	DRY GAS METER TEMP (°F) INLET	DRY GAS METER TEMP (°F) OUTLET
A1	0	522.365	0.25	0.500	1.0	1.000	648	51	50
2	5		0.25	0.500	1.0	1.000	650	51	47
3	10		0.23	0.480	1.0	1.000	650	52	47
4	15		0.24	0.490	1.0	1.000	649	51	46
5	20		0.23	0.480	1.0	1.000	649	51	46
6	25		0.23	0.480	1.0	1.000	647	51	46
7	30		0.24	0.490	1.0	1.000	647	51	46
8	35		0.24	0.490			649		
B1	40		0.24	0.490			651		
2	45		0.24	0.490			647		
3	50		0.23	0.480			648		
4	55		0.23	0.480			649		
5	60	558.330	0.25	0.500			652		
6			0.22	0.469			649		
7			0.22	0.469			647		
8			0.24	0.490			648		
	Total	Total	Avg.	Avg.	Avg.	Avg.	Avg.		Avg.
	60.0	35.965	0.236	0.486	1.00	1.000	648.8		49.0

Impinger Gain

impinger 1:	852.0	821.0	31.0
impinger 2:	760.0	753.0	7.0
impinger 3:	617.0	616.0	1.0
impinger 4:	885.0	872.0	13.0
	Net Weight Gain (grams):		52.0

M4 Start Time: 0430
M4 Stop Time: 0530

			Avg.
Static Pressure:	0.12	0.12	0.12

TRC Environmental Corp.

EMISSION MEASUREMENTS DEPARTMENT

19874 141st Place N.E.
Woodinville, WA 98072
Phone: (425) 489-1938
Fax: (425) 489-9564

CLIENT:	Shell Offshore, Inc. - Norway	DATE:	05/18/07
LOCATION:	Tor Viking II	PROJECT NO.:	150614
UNIT:	Main Engine #2 (SCR Off)	PERSONNEL:	MM/MLE
CONDITION:	35% Load		

REPORTING SHEET

The table below contains the results of testing and calculations performed by TRC on the date(s) listed.

Emissions Calculations - Measured

Method 7E - Nitrogen Oxides (NO_x)

Parameter	SYMBOL	UNITS	DATA			
Test Number			Run 1	Run 2	Run 3	AVG
Test Date			5/18/2007	5/18/2007	5/18/2007	
Start Time			0118	0315	0430	
Stop Time			0218	0415	0530	
Calculated Data						
Stack Gas Oxygen Content	O_2	%	13.9	13.8	13.6	13.8
Moisture Fraction, Bws = Vw(Std)/(Vm (Std)+Vw(Std))	Bws	none	6.08%	5.04%	6.30%	5.81%
Dry Stack Gas Flow Rate (DRY, STP),	Qsd	dscf/min	4,531.1	4,508.9	4,377.9	4,472.6
Qsd = 17.647 * Q * (1-Bws)* (Ps/Ts)		dscm/min	128.3	127.6	123.9	126.6
Method 19 Fuel Factor for Diesel Oil		dscf/MMBtu	9,190	9,190	9,190	9,190
Diesel Fuel Useage		L/hr	216	220	221	219
Diesel Fuel Useage		gal/hr	57.1	58.1	58.4	57.9
Gaseous Constituents						
Nitrogen Oxides (NO_x)						
NO_x Emission Concentration (dry)	ppm	NO_x	573.8	535.8	527.4	545.7
NO_x Emission Rate	lb/hr	NO_x	18.6	17.3	16.5	17.5
NO_x Emission Rate	lb/MMBtu	NO_x	1.880	1.731	1.657	1.756
NO_x Emission Rate	lb/gal	NO_x	0.3264	0.2978	0.2833	0.3025

TEST DATA SUMMARIES

Shell Offshore, Inc. - Norway
Tor Viking II
Main Engine #2 (SCR Off)
57% Load

Moisture & Airflow

Test Dates: 5/18/2007

	Run 4	Run 5	Run 6
Dates:	5/18/2007	5/18/2007	5/18/2007
Barometric Pressure at Ref. Bar. (in. Hg):	29.90	29.90	29.90
Height of Sampling Location Above Ref. Bar. (ft):	0.00	0.00	0.00
Barometric Pressure at Sampling Location:	**29.90**	**29.90**	**29.90**

TABLE OF CONTENTS:

Data Sheet
Calculation Sheet
Run Sheet - Run 4
Run Sheet - Run 5
Run Sheet - Run 6
NO_x

Sampling Data Summary

Parameter	Run 4	Run 5	Run 6	Average
Total Sampling Time, Min.	60	60	60	60
Stack Gas Oxygen Content, O_2%	13.7	13.8	13.9	13.8
Stack Gas Carbon Dioxide Content, CO_2%	5.5	5.4	5.3	5.4
Gas Sample Volume at Standard Conditions, cu. ft.	35.498	36.103	35.890	35.830
cu. m.	1.005	1.022	1.016	1.014
Dry Stack Gas Flow Rate (Dry, STP), dscf/min	8,635.8	8,612.6	8,677.2	8641.9
dscm/min	244.5	243.8	245.7	244.7

Project Number: 150614

TRC Environmental Corp.

EMISSION MEASUREMENTS DEPARTMENT

19874 141st Place N.E.
Woodinville, WA 98072
Phone: (425) 489-1938
Fax: (425) 489-9564

CLIENT:	Shell Offshore, Inc. - Norway	DATES:	5/18/2007
LOCATION:	Tor Viking II	PROJECT NO.:	150614
UNIT:	Main Engine #2 (SCR Off)	PERSONNEL:	MM/MLE
CONDITION:	57% Load		

Data Input Sheet

The table below contains the results of testing and calculations performed by TRC on the date(s) listed.

Moisture & Airflow

Parameter	SYMBOL	UNITS	DATA			
Test Number			Run 4	Run 5	Run 6	
Test Date			5/18/2007	5/18/2007	5/18/2007	
Method 4 Start Time			0547	0706	0820	
Method 4 Stop Time			0647	0806	0920	**3-RUN AVG.**
Stack Diameter	ds	inches	27.5	27.5	27.5	
Barometric Pressure at Sampling Location	Pbar	in. Hg	29.90	29.90	29.90	29.90
Stack Static Pressure	Pg	in. H_2O	0.12	0.12	0.12	0.12
Pitot Coefficient	cp	none	0.84	0.84	0.84	
Meter Calibration Factor	Y	none	0.976	0.976	0.976	
	DH@	none	1.678	1.678	1.678	
Stack Gas Oxygen Content	O_2	%	13.7	13.8	13.9	13.8
Stack Gas Carbon Dioxide Content	CO_2	%	5.5	5.4	5.3	5.4
Net Moisture Gain (Impingers w/SiGel)	Ww	grams	39.8	62.1	53.9	51.9
Average Stack Temperature	ts	deg F	627.8	616.7	609.6	618.0
Average Meter Temperature	tm	deg F	49.8	58.6	62.6	57.0
Avg Delta H	dH	in. H_2O	1.00	1.00	1.00	1.00
Average Square Root Delta H	ASR dH	in. H_2O	1.000	1.000	1.000	1.000
Avg Velocity Head	dP	in. H_2O	0.88	0.91	0.90	0.90
Average Square Root Delta P	ASR dP	in. H_2O	0.939	0.952	0.948	0.946
Gas Sample Volume	Vm	cu. ft.	35.054	36.267	36.334	35.885
Total Sampling Time	min	minutes	60	60	60	

TRC Environmental Corp.

EMISSION MEASUREMENTS DEPARTMENT

19874 141st Place N.E.
Woodinville, WA 98072
Phone: (425) 489-1938
Fax: (425) 489-9564

CLIENT:	Shell Offshore, Inc. - Norway	DATES:	5/18/2007
LOCATION:	Tor Viking II	PROJECT NO.:	150614
UNIT:	Main Engine #2 (SCR Off)	PERSONNEL:	MM/MLE
CONDITION: 57% Load			

Calculation Sheet

The table below contains the results of testing and calculations performed by TRC on the date(s) listed.

Moisture & Airflow

Parameter	SYMBOL	UNITS	DATA			
Test Number			Run 4	Run 5	Run 6	
Test Date			5/18/2007	5/18/2007	5/18/2007	
Method 4 Start Time:			0547	0706	0820	
Method 4 Stop Time:			0647	0806	0920	
Calculated Data						**3-RUN AVG.**
Stack Area,As=3.14159*((Ds/12)/2)^2	As	sq.ft.	4.12	4.12	4.12	4.12
Avg Stack Temperature, Ts=ts+460	Ts	deg R	1087.8	1076.7	1069.6	1078.0
Meter Pressure, Pm=Pb+Dh/13.6	Pm	in. Hg	29.97	29.97	29.97	29.97
Avg Meter Temperature, Tm=tm+460	Tm	deg R	509.8	518.6	522.6	517.0
Gas Sample Volume at Standard Conditions,	Vm(std)	cu. ft.	35.498	36.103	35.890	35.830
Vm(std)= 528/29.92*Y*Vm*Pm/Tm		cu. m.	1.005	1.022	1.016	1.014
Net Moisture Gain (Impingers w/SiGel)	Ww	grams	39.8	62.1	53.9	51.9
Volume of Water Vapor, Vw(std)= 0.04715*Wlc	Vw(std)	cu. ft.	1.877	2.928	2.541	2.449
Moisture Fraction, Bws = Vw(Std)/(Vm(Std)+Vw(Std))*100	Bws	%	5.02%	7.50%	6.61%	6.38%
Dry Stack Gas Molecular Weight, Md = (0.32*O2)+(0.44*CO2)+(0.28*(100-(O2+CO2)))	Mwd	g/g-mole	29.43	29.42	29.40	29.42
Wet Stack Gas Molecular Weight Mw = Md* (1-Bws)+(18*(Bws))	Mws	g/g-mole	28.85	28.56	28.65	28.69
Absolute Stack Pressure, Ps = Pbar + Pg/13.6	Ps	in. Hg.	29.91	29.91	29.91	29.91
Stack Gas Velocity Vs= 85.49*Cp*ASRdP*((Ts)/((Ps)*(Mw)))^0.5	Vs	ft/sec	75.72	76.75	76.09	76.18
Vsm = 0.3048* Vs	Vsm	m/sec	23.08	23.39	23.19	23.22
Actual Stack Gas Flow Rate, Qa = 60*Vs*As	Qa	acf/min	18,738.5	18,993.5	18,830.1	18,854.0
Stack Gas Flow Rate (STP), Qsw = 528/29.92 * Qa * (Ps/Ts)	Qsw	scf/min	9,092.4	9,311.1	9,291.7	9,231.7
Dry Stack Gas Flow Rate (Dry, STP),	Qsd	dscf/min	8,635.8	8,612.6	8,677.2	8,641.9
Qsd = 528/29.92 * Qa * (1-Bws)* (Ps/Ts)		dscm/min	244.5	243.8	245.7	244.7

Sampling Data Summary

Parameter	SYMBOL	UNITS	Run 4	Run 5	Run 6	3-RUN AVG.
Total Sampling Time	min	minutes	60	60	60	60
Stack Gas Oxygen Content	O_2	%	13.7	13.8	13.9	13.8
Stack Gas Carbon Dioxide Content	CO_2	%	5.5	5.4	5.3	5.4
Gas Sample Volume at Standard Conditions,	Vm(std)	cu. ft.	35.498	36.103	35.890	35.830
		cu. m.	1.005	1.022	1.016	1.014
Dry Stack Gas Flow Rate (Dry, STP),	Qsd	dscf/min	8,635.8	8,612.6	8,677.2	8,641.9
		dscm/min	244.5	243.8	245.7	244.7

TRC Environmental Corp

EMISSION MEASUREMENTS DEPARTMENT

19874 141st Place N.E.
Woodinville, WA 98072
Phone: (425) 489-1938
Fax: (425) 489-9564

CLIENT:	Shell Offshore, Inc. - Norway	DATE:	5/18/2007
LOCATION:	Tor Viking II	PROJECT NO.:	150614
UNIT:	Main Engine #2 (SCR Off)	PERSONNEL:	MM/MLE
CONDITION:	57% Load		

Field Data Sheet

The table below contains the results of testing and calculations performed by TRC on the date(s) listed.

Moisture & Airflow

RUN NO: **Run 4**
Minutes per point: 5
number of points: 16
OPERATOR: Mossy Meehan/Matt Ellis

POINT NUMBER	TIME	DGM READING INITIAL	VEL. Dp Dp (in. H_2O)	Sqrt Dp Dp	DIFF PRESS. DH	DIFF PRESS. Sqrt.	STACK TEMP. (^oF)	DRY GAS METER TEMP (^oF) INLET	DRY GAS METER TEMP (^oF) OUTLET
A1	0	594.961	0.85	0.922	1.0	1.000	630	50	49
2	5		0.87	0.933	1.0	1.000	630	52	47
3	10		0.89	0.943	1.0	1.000	634	52	47
4	15		0.93	0.964	1.0	1.000	634	53	47
5	20		0.93	0.964	1.0	1.000	634	53	47
6	25		0.91	0.954	1.0	1.000	635	53	47
7	30		0.89	0.943	1.0	1.000	635	53	47
8	35		0.90	0.949			634		
B1	40		0.91	0.954			635		
2	45		0.90	0.949			635		
3	50		0.88	0.938			634		
4	55		0.89	0.943			634		
5	60	630.015	0.87	0.933			635		
6			0.92	0.959			638		
7			0.91	0.954			638		
8			0.87	0.933			639		
A1			0.85	0.922			622		
2			0.85	0.922			625		
3			0.86	0.927			622		
4			0.87	0.933			620		
5			0.90	0.949			620		
6			0.91	0.954			621		
7			0.88	0.938			621		
8			0.87	0.933			620		
B1			0.86	0.927			628		
2			0.87	0.933			623		
3			0.92	0.959			620		
4			0.86	0.927			618		
5			0.86	0.927			618		
6			0.85	0.922			616		
7			0.85	0.922			620		
8			0.85	0.922			620		
	Total	Total	Avg.	Avg.	Avg.	Avg.	Avg.		Avg.
	60.0	35.054	0.882	0.939	1.00	1.000	627.8		49.8

Impinger Gain

impinger 1:	898.0	874.0	24.0
impinger 2:	767.0	763.2	3.8
impinger 3:	619.0	618.0	1.0
impinger 4:	910.5	899.5	11.0
	Net Weight Gain (grams):		39.8

M4 Start Time: 0547
M4 Stop Time: 0647

			Avg.
Static Pressure:	0.12	0.12	0.12

TRC Environmental Corp.

EMISSION MEASUREMENTS DEPARTMENT

19874 141st Place N.E.
Woodinville, WA 98072
Phone: (425) 489-1938
Fax: (425) 489-9564

CLIENT:	Shell Offshore, Inc. - Norway	DATE:	5/18/2007
LOCATION:	Tor Viking II	PROJECT NO.:	150614
UNIT:	Main Engine #2 (SCR Off)	PERSONNEL:	MM/MLE
CONDITION:	57% Load		

Field Data Sheet

The table below contains the results of testing and calculations performed by TRC on the date(s) listed.

Moisture & Airflow

RUN NO: **Run 5**
Minutes per point: 5
number of points: 16
OPERATOR: Mossy Meehan/Jorge Trevino

POINT NUMBER	TIME	DGM READING INITIAL	VEL. Dp Dp (in. H_2O)	Sqrt Dp Dp	DIFF PRESS. DH	DIFF PRESS. Sqrt.	STACK TEMP. (^oF)	DRY GAS METER TEMP (°F) INLET	DRY GAS METER TEMP (°F) OUTLET
A1	0	630.491	0.85	0.922	1.0	1.000	622	55	48
2	5		0.85	0.922	1.0	1.000	625	58	48
3	10		0.86	0.927	1.0	1.000	622	64	55
4	15		0.87	0.933	1.0	1.000	620	64	
5	20		0.90	0.949	1.0	1.000	620	64	
6	25		0.91	0.954	1.0	1.000	621	65	
7	30		0.88	0.938	1.0	1.000	621	65	
8	35		0.87	0.933			620		
B1	40		0.86	0.927			628		
2	45		0.87	0.933			623		
3	50		0.92	0.959			620		
4	55		0.86	0.927			618		
5	60	666.758	0.86	0.927			618		
6			0.85	0.922			616		
7			0.85	0.922			620		
8			0.85	0.922			620		
A1			0.82	0.906			612		
2			0.87	0.933			612		
3			0.91	0.954			612		
4			0.92	0.959			612		
5			0.90	0.949			612		
6			0.91	0.954			612		
7			0.87	0.933			612		
8			0.88	0.938			612		
B1			0.85	0.922			612		
2			1.00	1.000			613		
3			1.10	1.049			613		
4			1.00	1.000			613		
5			1.10	1.049			613		
6			1.00	1.000			613		
7			1.00	1.000			613		
8			1.00	1.000			613		
	Total	Total	Avg.	Avg.	Avg.	Avg.	Avg.		Avg.
	60.0	36.267	0.908	0.952	1.00	1.000	616.7		58.6

Impinger Gain

impinger 1:	930.0	898.0	32.0
impinger 2:	783.0	767.0	16.0
impinger 3:	620.0	619.0	1.0
impinger 4:	923.6	910.5	13.1
	Net Weight Gain (grams):		62.1

M4 Start Time: 0706
M4 Stop Time: 0806

			Avg.
Static Pressure:	0.12	0.12	0.12

TRC Environmental Corp.

EMISSION MEASUREMENTS DEPARTMENT

19874 141st Place N.E.
Woodinville, WA 98072
Phone: (425) 489-1938
Fax: (425) 489-9564

CLIENT:	Shell Offshore, Inc. - Norway	DATE:	5/18/2007
LOCATION:	Tor Viking II	PROJECT NO.:	150614
UNIT:	Main Engine #2 (SCR Off)	PERSONNEL:	MM/MLE
CONDITION:	57% Load		

Field Data Sheet

The table below contains the results of testing and calculations performed by TRC on the date(s) listed.

Moisture & Airflow

RUN NO: **Run 6**
Minutes per point: 5
number of points: 16
OPERATOR: Mossy Meehan/Jorge Trevino

POINT NUMBER	TIME	DGM READING INITIAL	VEL. Dp Dp (in. H_2O)	Sqrt Dp Dp	DIFF PRESS. DH	DIFF PRESS. Sqrt.	STACK TEMP. (°F)	DRY GAS METER TEMP (°F) INLET	DRY GAS METER TEMP (°F) OUTLET
A1	0	666.857	0.82	0.906	1.0	1.000	612	56	55
2	5		0.87	0.933	1.0	1.000	612	63	56
3	10		0.91	0.954	1.0	1.000	612	63	57
4	15		0.92	0.959	1.0	1.000	612	64	57
5	20		0.90	0.949	1.0	1.000	612	72	63
6	25		0.91	0.954	1.0	1.000	612	72	63
7	30		0.87	0.933	1.0	1.000	612	72	64
8	35		0.88	0.938			612		
B1	40		0.85	0.922			612		
2	45		1.00	1.000			613		
3	50		1.10	1.049			613		
4	55		1.00	1.000			613		
5	60	703.191	1.10	1.049			613		
6			1.00	1.000			613		
7			1.00	1.000			613		
8			1.00	1.000			613		
A1			0.91	0.954			603		
2			0.99	0.995			605		
3			0.93	0.964			606		
4			0.92	0.959			607		
5			0.86	0.927			607		
6			0.85	0.922			607		
7			0.88	0.938			608		
8			0.91	0.954			608		
B1			0.90	0.949			607		
2			0.88	0.938			608		
3			0.88	0.938			608		
4			0.82	0.906			608		
5			0.78	0.883			607		
6			0.75	0.866			607		
7			0.73	0.854			607		
8			0.73	0.854			606		
	Total	Total	Avg.	Avg.	Avg.	Avg.	Avg.		Avg.
	60.0	36.334	0.902	0.948	1.00	1.000	609.6		62.6

Impinger Gain

impinger 1:	958.0	930.0	28.0
impinger 2:	795.0	783.0	12.0
impinger 3:	622.0	620.0	2.0
impinger 4:	935.0	923.1	11.9
	Net Weight Gain (grams):		53.9

M4 Start Time: 0820
M4 Stop Time: 0920

			Avg.
Static Pressure:	0.12	0.12	0.12

TRC Environmental Corp. EMISSION MEASUREMENTS DEPARTMENT

19874 141st Place N.E.
Woodinville, WA 98072
Phone: (425) 489-1938
Fax: (425) 489-9564

CLIENT:	Shell Offshore, Inc. - Norway	DATE:	05/18/07
LOCATION:	Tor Viking II	PROJECT NO.:	150614
UNIT:	Main Engine #2 (SCR Off)	PERSONNEL:	MM/MLE
CONDITION:	57% Load		

REPORTING SHEET

The table below contains the results of testing and calculations performed by TRC on the date(s) listed.

Emissions Calculations - Measured

Method 7E - Nitrogen Oxides (NO_x)

Parameter	SYMBOL	UNITS	DATA			
Test Number			Run 4	Run 5	Run 6	AVG
Test Date			5/18/2007	5/18/2007	5/18/2007	
Start Time			0547	0706	0820	
Stop Time			0647	0806	0920	
Calculated Data						
Stack Gas Oxygen Content	O_2	%	13.7	13.8	13.9	13.8
Moisture Fraction, Bws = Vw(Std)/(Vm (Std)+Vw(Std))	Bws	none	5.02%	7.50%	6.61%	6.38%
Dry Stack Gas Flow Rate (DRY, STP),	Qsd	dscf/min	8,635.8	8,612.6	8,677.2	8,641.9
Qsd = 17.647 * Q * (1-Bws)* (Ps/Ts)		dscm/min	244.5	243.8	245.7	244.7
Method 19 Fuel Factor for Diesel Oil		dscf/MMBtu	9,190	9,190	9,190	9,190
Diesel Fuel Useage		L/hr	386	397	397	393
Diesel Fuel Useage		gal/hr	102.0	104.9	104.9	103.9
Gaseous Constituents						
Nitrogen Oxides (NO_x)						
NO_x Emission Concentration (dry)	ppm	NO_x	596.7	635.4	628.2	620.1
NO_x Emission Rate	lb/hr	NO_x	36.9	39.2	39.1	38.4
NO_x Emission Rate	lb/MMBtu	NO_x	1.901	2.052	2.058	2.004
NO_x Emission Rate	lb/gal	NO_x	0.3620	0.3738	0.3724	0.3694

TEST DATA SUMMARIES

Shell Offshore, Inc. - Norway
Tor Viking II
Main Engine #2 (SCR Off)
80% Load

Moisture & Airflow

Test Dates: 5/18/2007

	Run 7	Run 8	Run 9
Dates:	5/18/2007	5/18/2007	5/18/2007
Barometric Pressure at Ref. Bar. (in. Hg):	29.90	29.90	29.90
Height of Sampling Location Above Ref. Bar. (ft):	0.00	0.00	0.00
Barometric Pressure at Sampling Location:	**29.90**	**29.90**	**29.90**

TABLE OF CONTENTS:

Data Sheet
Calculation Sheet
Run Sheet - Run 7
Run Sheet - Run 8
Run Sheet - Run 9
NO_x

Sampling Data Summary

Parameter	Run 7	Run 8	Run 9	Average
Total Sampling Time, Min.	60	60	60	60
Stack Gas Oxygen Content, O_2%	13.7	13.6	13.6	13.6
Stack Gas Carbon Dioxide Content, CO_2%	5.4	5.5	5.5	5.5
Gas Sample Volume at Standard Conditions, cu. ft.	35.305	35.325	35.190	35.273
cu. m.	0.999	1.000	0.996	0.999
Dry Stack Gas Flow Rate (Dry, STP), dscf/min	9,766.3	9,806.6	9,962.7	9845.2
dscm/min	276.5	277.6	282.0	278.7

Project Number: 150614

TRC Environmental Corp.

EMISSION MEASUREMENTS DEPARTMENT

19874 141st Place N.E.
Woodinville, WA 98072
Phone: (425) 489-1938
Fax: (425) 489-9564

CLIENT:	Shell Offshore, Inc. - Norway	DATES:	5/18/2007
LOCATION:	Tor Viking II	PROJECT NO.:	150614
UNIT:	Main Engine #2 (SCR Off)	PERSONNEL:	MM/JT
CONDITION:	80% Load		

Data Input Sheet

The table below contains the results of testing and calculations performed by TRC on the date(s) listed.

Moisture & Airflow

Parameter	SYMBOL	UNITS	DATA			
Test Number			Run 7	Run 8	Run 9	
Test Date			5/18/2007	5/18/2007	5/18/2007	
Method 4 Start Time			1015	1200	1325	
Method 4 Stop Time			1115	1300	1425	**3-RUN AVG.**
Stack Diameter	ds	inches	27.5	27.5	27.5	
Barometric Pressure at Sampling Location	Pbar	in. Hg	29.90	29.90	29.90	29.90
Stack Static Pressure	Pg	in. H_2O	0.00	0.00	0.00	0.00
Pitot Coefficient	cp	none	0.84	0.84	0.84	
Meter Calibration Factor	Y	none	0.976	0.976	0.976	
	DH@	none	1.678	1.678	1.678	
Stack Gas Oxygen Content	O_2	%	13.7	13.6	13.6	13.6
Stack Gas Carbon Dioxide Content	CO_2	%	5.4	5.5	5.5	5.5
Net Moisture Gain (Impingers w/SiGel)	Ww	grams	201.1	201.1	201.1	201.1
Average Stack Temperature	ts	deg F	574.0	577.6	578.3	576.6
Average Meter Temperature	tm	deg F	58.6	62.2	66.3	62.4
Avg Delta H	dH	in. H_2O	1.00	1.00	1.00	1.00
Average Square Root Delta H	ASR dH	in. H_2O	1.000	1.000	1.000	1.000
Avg Velocity Head	dP	in. H_2O	1.14	1.16	1.19	1.16
Average Square Root Delta P	ASR dP	in. H_2O	1.065	1.071	1.089	1.075
Gas Sample Volume	Vm	cu. ft.	35.464	35.733	35.874	35.690
Total Sampling Time	min	minutes	60	60	60	

TRC Environmental Corp.

EMISSION MEASUREMENTS DEPARTMENT

19874 141st Place N.E.
Woodinville, WA 98072
Phone: (425) 489-1938
Fax: (425) 489-9564

CLIENT:	Shell Offshore, Inc. - Norway	DATES:	5/18/2007
LOCATION:	Tor Viking II	PROJECT NO.:	150614
UNIT:	Main Engine #2 (SCR Off)	PERSONNEL:	MM/JT
CONDITION:	80% Load		

Calculation Sheet

The table below contains the results of testing and calculations performed by TRC on the date(s) listed.

Moisture & Airflow

Parameter	SYMBOL	UNITS	DATA			
Test Number			Run 7	Run 8	Run 9	
Test Date			5/18/2007	5/18/2007	5/18/2007	
Method 4 Start Time:			1015	1200	1325	
Method 4 Stop Time:			1115	1300	1425	
Calculated Data						**3-RUN AVG.**
Stack Area,As=3.14159*((Ds/12)/2)^2	As	sq.ft.	4.12	4.12	4.12	4.12
Avg Stack Temperature, Ts=ts+460	Ts	deg R	1034.0	1037.6	1038.3	1036.6
Meter Pressure, Pm=Pb+Dh/13.6	Pm	in. Hg	29.97	29.97	29.97	29.97
Avg Meter Temperature, Tm=tm+460	Tm	deg R	518.6	522.2	526.3	522.4
Gas Sample Volume at Standard Conditions,	Vm(std)	cu. ft.	35.305	35.325	35.190	35.273
Vm(std)= 528/29.92*Y*Vm*Pm/Tm		cu. m.	0.999	1.000	0.996	0.999
Net Moisture Gain (Impingers w/SiGel)	Ww	grams	201.1	201.1	201.1	201.1
Volume of Water Vapor, Vw(std)= 0.04715*Wlc	Vw(std)	cu. ft.	9.482	9.482	9.482	9.482
Moisture Fraction, Bws = Vw(Std)/(Vm(Std)+Vw(Std))*100	Bws	%	8.22%	8.22%	8.22%	8.22%
Dry Stack Gas Molecular Weight, Md = (0.32*O2)+(0.44*CO2)+(0.28*(100-(O2+CO2)))	Mwd	g/g-mole	29.41	29.42	29.42	29.42
Wet Stack Gas Molecular Weight Mw = Md* (1-Bws)+(18*(Bws))	Mws	g/g-mole	28.47	28.48	28.48	28.48
Absolute Stack Pressure, Ps = Pbar + Pg/13.6	Ps	in. Hg.	29.90	29.90	29.90	29.90
Stack Gas Velocity Vs= 85.49*Cp*ASRdP*((Ts)/((Ps)*(Mw)))^0.5	Vs	ft/sec	84.26	84.91	86.31	85.16
Vsm = 0.3048* Vs	Vsm	m/sec	25.68	25.88	26.31	25.96
Actual Stack Gas Flow Rate, Qa = 60*Vs*As	Qa	acf/min	20,854.0	21,012.9	21,360.0	21,075.6
Stack Gas Flow Rate (STP), Qsw = 528/29.92 * Qa * (Ps/Ts)	Qsw	scf/min	10,641.4	10,685.4	10,855.3	10,727.4
Dry Stack Gas Flow Rate (Dry, STP),	Qsd	dscf/min	9,766.3	9,806.6	9,962.7	9,845.2
Qsd = 528/29.92 * Qa * (1-Bws)* (Ps/Ts)		dscm/min	276.5	277.6	282.0	278.7

Sampling Data Summary

Parameter	SYMBOL	UNITS	Run 7	Run 8	Run 9	3-RUN AVG.
Total Sampling Time	min	minutes	60	60	60	60
Stack Gas Oxygen Content	O_2	%	13.7	13.6	13.6	13.6
Stack Gas Carbon Dioxide Content	CO_2	%	5.4	5.5	5.5	5.5
Gas Sample Volume at Standard Conditions,	Vm(std)	cu. ft.	35.305	35.325	35.190	35.273
		cu. m.	0.999	1.000	0.996	0.999
Dry Stack Gas Flow Rate (Dry, STP),	Qsd	dscf/min	9,766.3	9,806.6	9,962.7	9,845.2
		dscm/min	276.5	277.6	282.0	278.7

TRC Environmental Corp

EMISSION MEASUREMENTS DEPARTMENT

19874 141st Place N.E.
Woodinville, WA 98072
Phone: (425) 489-1938
Fax: (425) 489-9564

CLIENT:	Shell Offshore, Inc. - Norway	DATE:	5/18/2007
LOCATION:	Tor Viking II	PROJECT NO.:	150614
UNIT:	Main Engine #2 (SCR Off)	PERSONNEL:	MM/JT
CONDITION:	80% Load		

Field Data Sheet

The table below contains the results of testing and calculations performed by TRC on the date(s) listed.

Moisture & Airflow

RUN NO: **Run 7**
Minutes per point: 5
number of points: 16
OPERATOR: Mossy Meehan/Jorge Trevino

POINT NUMBER	TIME	DGM READING INITIAL	VEL. Dp Dp (in. H_2O)	Sqrt Dp Dp	DIFF PRESS. DH	DIFF PRESS. Sqrt.	STACK TEMP. (°F)	DRY GAS METER TEMP (°F) INLET	DRY GAS METER TEMP (°F) OUTLET
A1	0	703.348	1.20	1.095	1.0	1.000	570	55	55
2	5		1.20	1.095	1.0	1.000	572	58	55
3	10		1.40	1.183	1.0	1.000	572	59	55
4	15		1.30	1.140	1.0	1.000	571	62	55
5	20		0.95	0.975	1.0	1.000	570	62	55
6	25		0.97	0.985	1.0	1.000	570	66	57
7	30		0.98	0.990	1.0	1.000	571	67	59
8	35		0.98	0.990			570		
B1	40		1.10	1.049			571		
2	45		1.30	1.140			571		
3	50		1.30	1.140			571		
4	55		1.10	1.049			571		
5	60	738.812	1.10	1.049			570		
6			1.10	1.049			570		
7			1.20	1.095			570		
8			1.10	1.049			570		
A1			1.20	1.095			578		
2			1.30	1.140			575		
3			1.50	1.225			576		
4			1.30	1.140			577		
5			1.00	1.000			578		
6			0.98	0.990			577		
7			0.97	0.985			577		
8			0.96	0.980			577		
B1			1.20	1.095			577		
2			1.50	1.225			578		
3			1.50	1.225			578		
4			1.30	1.140			579		
5			0.90	0.949			578		
6			0.89	0.943			578		
7			0.88	0.938			578		
8			0.86	0.927			578		
	Total	Total	Avg.	Avg.	Avg.	Avg.	Avg.		Avg.
	60.0	35.464	1.141	1.065	1.00	1.000	574.0		58.6

Impinger Gain (for all 3 runs)

impinger 1:	232.0	100.0	132.0
impinger 2:	148.0	100.0	48.0
impinger 3:	5.0	0.0	5.0
impinger 4:	312.0	295.9	16.1
	Net Weight Gain (mL or g):		201.1

M4 Start Time: 1015
M4 Stop Time: 1115

			Avg.
Static Pressure:	0.00	0.00	0.00

TRC Environmental Corp.

EMISSION MEASUREMENTS DEPARTMENT

19874 141st Place N.E.
Woodinville, WA 98072
Phone: (425) 489-1938
Fax: (425) 489-9564

CLIENT:	Shell Offshore, Inc. - Norway	DATE:	5/18/2007
LOCATION:	Tor Viking II	PROJECT NO.:	150614
UNIT:	Main Engine #2 (SCR Off)	PERSONNEL:	MM/JT
CONDITION:	80% Load		

Field Data Sheet

The table below contains the results of testing and calculations performed by TRC on the date(s) listed.

Moisture & Airflow

RUN NO: **Run 8**
Minutes per point: 5
number of points: 16
OPERATOR: Mossy Meehan/Jorge Trevino

POINT NUMBER	TIME	DGM READING INITIAL	VEL. Dp Dp (in. H_2O)	Sqrt Dp Dp	DIFF PRESS. DH	DIFF PRESS. Sqrt.	STACK TEMP. (^oF)	DRY GAS METER TEMP (°F) INLET	DRY GAS METER TEMP (°F) OUTLET
A1	0	738.862	1.20	1.095	1.0	1.000	578	60	60
2	5		1.30	1.140	1.0	1.000	575	62	58
3	10		1.50	1.225	1.0	1.000	576	64	58
4	15		1.30	1.140	1.0	1.000	577	65	59
5	20		1.00	1.000	1.0	1.000	578	66	60
6	25		0.98	0.990	1.0	1.000	577	68	60
7	30		0.97	0.985	1.0	1.000	577	69	62
8	35		0.96	0.980			577		
B1	40		1.20	1.095			577		
2	45		1.50	1.225			578		
3	50		1.50	1.225			578		
4	55		1.30	1.140			579		
5	60	774.595	0.90	0.949			578		
6			0.89	0.943			578		
7			0.88	0.938			578		
8			0.86	0.927			578		
A1			1.10	1.049			573		
2			1.40	1.183			575		
3			1.50	1.225			575		
4			1.10	1.049			577		
5			0.98	0.990			577		
6			0.94	0.970			578		
7			0.95	0.975			578		
8			0.93	0.964			578		
B1			1.30	1.140			579		
2			1.50	1.225			579		
3			1.50	1.225			580		
4			1.30	1.140			580		
5			1.10	1.049			579		
6			1.10	1.049			579		
7			1.10	1.049			579		
8			1.00	1.000			579		
	Total	Total	Avg.	Avg.	Avg.	Avg.	Avg.		Avg.
	60.0	35.733	1.158	1.071	1.00	1.000	577.6		62.2

Impinger Gain (for all 3 runs)

impinger 1:	232.0	100.0	132.0
impinger 2:	148.0	100.0	48.0
impinger 3:	5.0	0.0	5.0
impinger 4:	312.0	295.9	16.1
	Net Weight Gain (mL or g):		201.1

M4 Start Time: 1200
M4 Stop Time: 1300

			Avg.
Static Pressure:	0.00	0.00	0.00

TRC Environmental Corp.

EMISSION MEASUREMENTS DEPARTMENT

19874 141st Place N.E.
Woodinville, WA 98072
Phone: (425) 489-1938
Fax: (425) 489-9564

CLIENT:	Shell Offshore, Inc. - Norway	DATE:	5/18/2007
LOCATION:	Tor Viking II	PROJECT NO.:	150614
UNIT:	Main Engine #2 (SCR Off)	PERSONNEL:	MM/JT
CONDITION:	80% Load		

Field Data Sheet

The table below contains the results of testing and calculations performed by TRC on the date(s) listed.

Moisture & Airflow

RUN NO: **Run 9**
Minutes per point: 5
number of points: 16
OPERATOR: Mossy Meehan/Jorge Trevino

POINT NUMBER	TIME	DGM READING INITIAL	VEL. Dp Dp (in. H_2O)	Sqrt Dp Dp	DIFF PRESS. DH	DIFF PRESS. Sqrt.	STACK TEMP. (°F)	DRY GAS METER TEMP (°F) INLET	DRY GAS METER TEMP (°F) OUTLET
A1	0	774.640	1.10	1.049	1.0	1.000	573	63	61
2	5		1.40	1.183	1.0	1.000	575	64	62
3	10		1.50	1.225	1.0	1.000	575	70	63
4	15		1.10	1.049	1.0	1.000	577	71	63
5	20		0.98	0.990	1.0	1.000	577	72	64
6	25		0.94	0.970	1.0	1.000	578	72	63
7	30		0.95	0.975	1.0	1.000	578	75	65
8	35		0.93	0.964			578		
B1	40		1.30	1.140			579		
2	45		1.50	1.225			579		
3	50		1.50	1.225			580		
4	55		1.30	1.140			580		
5	60	810.514	1.10	1.049			579		
6			1.10	1.049			579		
7			1.10	1.049			579		
8			1.00	1.000			579		
A1			1.50	1.225			574		
2			1.60	1.265			575		
3			1.30	1.140			580		
4			1.30	1.140			580		
5			1.00	1.000			579		
6			0.98	0.990			579		
7			0.97	0.985			579		
8			0.96	0.980			579		
B1			1.40	1.183			578		
2			1.50	1.225			579		
3			1.40	1.183			580		
4			1.30	1.140			579		
5			1.10	1.049			580		
6			1.10	1.049			579		
7			1.00	1.000			580		
8			1.00	1.000			579		
	Total	Total	Avg.	Avg.	Avg.	Avg.	Avg.		Avg.
	60.0	35.874	1.194	1.089	1.00	1.000	578.3		66.3

Impinger Gain (for all 3 runs)

impinger 1:	232.0	100.0	132.0
impinger 2:	148.0	100.0	48.0
impinger 3:	5.0	0.0	5.0
impinger 4:	312.0	295.9	16.1
	Net Weight Gain (mL or g):		201.1

M4 Start Time: 1325
M4 Stop Time: 1425

			Avg.
Static Pressure:	0.00	0.00	0.00

TRC Environmental Corp.

EMISSION MEASUREMENTS DEPARTMENT

19874 141st Place N.E.
Woodinville, WA 98072
Phone: (425) 489-1938
Fax: (425) 489-9564

CLIENT:	Shell Offshore, Inc. - Norway	DATE:	05/18/07
LOCATION:	Tor Viking II	PROJECT NO.:	150614
UNIT:	Main Engine #2 (SCR Off)	PERSONNEL:	MM/JT
CONDITION:	80% Load		

REPORTING SHEET

The table below contains the results of testing and calculations performed by TRC on the date(s) listed.

Emissions Calculations - Measured

Method 7E - Nitrogen Oxides (NO_x)

Parameter	SYMBOL	UNITS	DATA			
Test Number			Run 7	Run 8	Run 9	AVG
Test Date			5/18/2007	5/18/2007	5/18/2007	
Start Time			1015	1200	1325	
Stop Time			1115	1300	1449	
Calculated Data						
Stack Gas Oxygen Content	O_2	%	13.7	13.6	13.6	13.6
Moisture Fraction, Bws = Vw(Std)/(Vm (Std)+Vw(Std))	Bws	none	8.22%	8.22%	8.22%	8.22%
Dry Stack Gas Flow Rate (DRY, STP),	Qsd	dscf/min	9,766.3	9,806.6	9,962.7	9,845.2
Qsd = 17.647 * Q * (1-Bws)* (Ps/Ts)		dscm/min	276.5	277.6	282.0	278.7
Method 19 Fuel Factor for Diesel Oil		dscf/MMBtu	9,190	9,190	9,190	9,190
Diesel Fuel Useage		L/hr	607	612	611	610
Diesel Fuel Useage		gal/hr	160.4	161.7	161.4	161.1
Gaseous Constituents						
Nitrogen Oxides (NO_x)						
NO_x Emission Concentration (dry)	ppm	NO_x	652.6	649.0	642.5	648.0
NO_x Emission Rate	lb/hr	NO_x	45.7	45.6	45.9	45.7
NO_x Emission Rate	lb/MMBtu	NO_x	2.079	2.039	2.018	2.045
NO_x Emission Rate	lb/gal	NO_x	0.2847	0.2820	0.2841	0.2836

Main Engine #2 - *SCR Off* Operational Data
May 18, 2007

Date	Time	Load (%)	Fuel Flow (L/hr)				
18-May	0120	35%	215	Run 1 - 0118-0218	35%	Load	216 L/hr
	0150	35%	216				
	0220	35%	216				
	0315	35%	221	Run 2 - 0315-0415	35%	Load	220 L/hr
	0345	35%	220				
	0415	35%	219				
	0430	35%	221	Run 3 - 0430-0530	35%	Load	221 L/hr
	0500	35%	220				
	0530	35%	221				
	0550	57%	380	Run 4 - 0547-0647	57%	Load	386 L/hr
	0620	57%	392				
	0650	57%	391				
	0710	57%	396	Run 5 - 0706-0806	57%	Load	397 L/hr
	0740	57%	397				
	0810	57%	396				
	0825	57%	391	Run 6 - 0820-0920	57%	Load	397 L/hr
	0855	57%	402				
	0930	57%	386				
	1015	80%	631	Run 7 - 1015-1115	80%	Load	607 L/hr
	1045	80%	592				
	1115	80%	598				
	1200	80%	617	Run 8 - 1200-1300	80%	Load	612 L/hr
	1233	80%	606				
	1305	81%	611				
	1330	80%	612	Run 9 - 1325-1425	80%	Load	611 L/hr
	1410	80%	610				
	1440	80%	603				

Recorded by: **Paul Clark, TRC**

Nitrogen Oxides (NO_x) Example Calculations

Source: SOI, Kulluk Drilling Unit, Tor Viking II
Norway Scr
Run #: 3 - 80% On Main Engine #2

Date: 5/18/2007

Emission Concentration Results

instrument averaged 223.5 ppm NO_x during the run

$$_____ \text{ ppm} \times \frac{(20.9 - ___ \%\ O_2)}{(20.9 - _____ \%O_2)} = \underline{NA} \text{ ppm } NO_x \text{ @ } ____ \%\ O_2$$

measured

Emission Rate Results

$$\underline{223.5} \text{ ppm} \times \frac{46.005 \text{ lb/lb-mole}}{385.3 \times 10^6 \text{ ft}^3 \text{ lb-mole, ppm}} \times \underline{8976.6} \frac{\text{dscf}}{\text{min}} \times 60 \frac{\text{min}}{\text{hr}} = \underline{14.4} \text{ lb/hr } NO_x$$

$$\underline{223.5} \text{ ppm} \times \frac{46.005 \text{ lb/lb-mole}}{385.3 \times 10^6 \text{ ft}^3 \text{ lb-mole, ppm}} \times \underline{9190} \frac{\text{dscf}}{\text{MMBtu}} \times \frac{20.9\%}{(20.9\% - \underline{13.6}\%\ O_2)} = \underline{0.7021} \text{ lb/MMBtu } NO_x$$

$$\underline{498} \frac{\text{L}}{\text{hr}} \times \frac{0.26417205 \text{ gal}}{\text{L}} = \underline{131.6} \frac{\text{gal}}{\text{hr}}$$ (fuel useage)

$$\underline{14.4} \frac{\text{lb}}{\text{hr}} \times \frac{\text{hr}}{\underline{131.6} \text{ gal}} = \underline{0.1093} \text{ lb/gal } NO_x$$

Nitrogen Oxides (NO_x) Example Calculations

Source: SO1, Kulluk Drilling unit, Tor Viking Norway

Run #: 1– 35% Scr Off - Main Engine #2

Date: 5/18/2007

Emission Concentration Results

instrument averaged 573.8 ppm NO_x during the run

$$_____ \text{ ppm} \times \frac{(20.9 - ___ \%\ O_2)}{(20.9 - ____ \%O_2)} = \underline{NA} \text{ ppm } NO_x \text{ @ } ____ \%\ O_2$$

measured

Emission Rate Results

$$\underline{573.8} \text{ ppm} \times \frac{46.005 \text{ lb/lb-mole}}{385.3 \times 10^6 \text{ ft}^3 \text{ lb-mole, ppm}} \times \underline{4531.1} \frac{\text{dscf}}{\text{min}} \times 60 \frac{\text{min}}{\text{hr}} = \underline{18.6} \text{ lb/hr } NO_x$$

$$\underline{573.8} \text{ ppm} \times \frac{46.005 \text{ lb/lb-mole}}{385.3 \times 10^6 \text{ ft}^3 \text{ lb-mole, ppm}} \times \underline{9190} \frac{\text{dscf}}{\text{MMBtu}} \times \frac{20.9\%}{(20.9\% - \underline{13.9}\ \%\ O_2)} = \underline{1.880} \text{ lb/MMBtu } NO_x$$

$$\underline{216} \frac{\text{L}}{\text{hr}} \times \frac{0.26417205 \text{ gal}}{\text{L}} = \underline{57.1} \frac{\text{gal}}{\text{hr}}$$ (Fuel useage)

$$\underline{18.6} \frac{\text{lb}}{\text{hr}} \times \frac{\text{hr}}{\underline{57.1} \text{ gal}} = \underline{0.3264} \text{ lb/gal } NO_x$$

Attachment D

Information Concerning Corbett Koehler Particulate Matter Emission Factor Used in May 2009 Permit Application

Updated emissions from ocean shipping

James J. Corbett
Marine Policy, College of Marine Studies, University of Delaware, Newark, Delaware, USA

Horst W. Koehler
Technical Promotion, MAN B&W Diesel AG, Augsburg, Germany

Received 7 May 2003; revised 21 July 2003; accepted 13 August 2003; published 29 October 2003.

[1] Marine vessel inventories demonstrate that ship emissions cannot be neglected in assessing environmental impacts of air pollution, although significant uncertainty in these inventories remains. We address this uncertainty by employing a bottom-up estimate of fuel consumption and vessel activity for internationally registered fleets, including cargo vessels, other commercial vessels, and military vessels. We identify model bias in previous work, which assumed internationally registered ships primarily consume international marine fuels. Updated results suggest fuel consumption is ~289 million metric tons per year, more than twice the quantity reported as international fuel. According to our analysis, fuel used by internationally registered fleets is apparently allocated to both international and domestic fuel statistics; this implies either that ships operate along domestic routes much of the time or that marine fuel sales to these ships may be misassigned. If the former is true, then allocation of emissions to international shipping routes may underestimate near-coastal emissions from ships. Our updated inventories increases previous ship emissions inventories for all pollutants; for example, global NO_x emissions (~6.87 Tg N) are more than doubled. This work also produces detailed sensitivity analyses of inputs to these estimates, identifying uncertainty in vessel duty-cycle as critical to overall emissions estimates. We discuss implications for assessing ship emissions impacts. *INDEX TERMS:* 0345 Atmospheric Composition and Structure: Pollution—urban and regional (0305); 1610 Global Change: Atmosphere (0315, 0325); 1694 Global Change: Instruments and techniques; 6309 Policy Sciences: Decision making under uncertainty; *KEYWORDS:* international shipping, emissions inventory, air pollution

Citation: Corbett, J. J., and H. W. Koehler, Updated emissions from ocean shipping, *J. Geophys. Res.*, *108*(D20), 4650, doi:10.1029/2003JD003751, 2003.

1. Introduction

[2] Ship emissions have local, regional, and global impacts [*Capaldo et al.*, 1999; *Davis et al.*, 2001; *Endresen et al.*, 2003; *Kasibhatla et al.*, 2000; *Lawrence and Crutzen*, 1999]. Pollution and atmospheric scientists rely on various emissions inventories to quantify the potential environmental impact [*Corbett*, 2002; *Corbett and Fischbeck*, 1997, 2000; *Corbett et al.*, 1999; *European Commission and ENTEC UK Limited*, 2002; *Olivier et al.*, 1996; *Skjølsvik et al.*, 2000]. These studies support long-held beliefs that marine diesel engines are among the most fuel-efficient combustion sources for moving global resources and products. Nonetheless, these inventories and model results identify international shipping as a significant source of air pollution and a contributing factor in global climate change.

[3] Emissions inventories provide important information to atmospheric scientists, pollution modelers, and policy makers. They are a fundamental input to evaluate potential impacts of pollution on the environment and human health. Moreover, regulations to control pollution sources are directly aimed at reducing total emissions, typically on a source-by-source basis. In setting regulations, policy makers tend to focus either on sources causing greatest impact (i.e., the largest sources) or on the most cost-effective sources to control (i.e., the least regulated sources). Recently, non-road sources in general, and ship emissions in particular, have come under increasing domestic and international regulation because inventories have shown them to be both larger than previously considered and mostly unregulated [*Environmental Protection Agency*, 1998a, 1998b, 1999, 2002a, 2002b, 2003; *European Commission*, 2002a, 2002b; *International Maritime Organization*, 1998].

[4] Three general elements apply to all emissions inventories of combustion sources, whether stationary or mobile. First, an estimate or measure must be made of the combustion source activity level (e.g., power and/or fuel consumption). Second, emissions resulting from this activity must be computed. Third, these results must be assigned to a location so that air quality impacts (and sometimes jurisdictional authority) can be determined. Without an accurate representation of these elements, scientists cannot effectively inform policy decisions regarding human health and environment.

Copyright 2003 by the American Geophysical Union.
0148-0227/03/2003JD003751$09.00

All non-road mobile sources have been less well characterized than stationary or on-road mobile sources, primarily because of uncertainties in locations of activity and in activity levels. In international shipping, these uncertainties are compounded by limited information about the emissions factors assigned to marine engines.

2. Previous Ship Emissions Inventories

[5] Progress has been made in assigning international shipping traffic geographically. The first geographically resolved, global inventory of ship emissions derived international shipping traffic densities from voluntarily reported, ship-based weather observations [*Corbett and Fischbeck*, 1997; *Corbett et al.*, 1999]. Other research assigned global emissions estimates to major shipping lanes [*Lawrence and Crutzen*, 1999; *Olivier et al.*, 1996]. These approaches showed qualitatively good agreement with regionally resolved ship inventories [*Carlton et al.*, 1995; *Kesgin and Vardar*, 2001; *Streets et al.*, 1997, 2000], but resolution differences or inconsistent assumptions prevent reconciling geographic assignment of ship activity between spatial scales. Recent comparison of four approaches for assigning location to international ship activity on a global scale suggests that the Automated Mutual-assistance Vessel Rescue system (AMVER) may provide more representative international shipping distribution than other approaches [*Endresen et al.*, 2003]. Endresen et al. claim that emissions can be allocated more accurately across ship traffic profile derived from the AMVER reporting frequency by using vessel size to weight the emissions allocation to each grid location. That paper presents a new and perhaps more representative methodology for assigning emissions from international marine bunkers to a global geographic grid, which is a significant contribution.

[6] Improvements also have occurred in test data for in-service marine engine exhaust emissions. These shipboard and manufacturer test data are used to establish average emission factors for various pollutants. In earlier work [*Corbett and Fischbeck*, 1997], average emission factors primarily relied on data from the Lloyd's Marine Exhaust Emissions Programme [*Carlton et al.*, 1995]. Later research included additional in-service and manufacturer data and attempted to quantify the uncertainty in average emission factors [*Skjølsvik et al.*, 2000]. Most recently, a study conducted by ENTEC and IVL for the European Commission updated these sources to compile and include the most comprehensive published test data for commercial marine vessels [*European Commission and ENTEC UK Limited*, 2002]. This report derived emission factors (NO_x, SO_x, HC, PM, and CO_2) for five different engine types and three different fuel types. Fuel sulfur contents are based on data provided to the International Maritime Organization's Marine Environment Protection Committee [*European Commission and ENTEC UK Limited*, 2002; *International Maritime Organization and Marine Environment Protection Committee*, 2001]; ENTEC used average values of 2.7% for residual oil, 1.0% for marine distillate oil, and 0.5% for marine gas oil. Moreover, power-based emission factors and specific fuel consumption values were estimated for each engine-fuel combination using three different activities or operating modes of the ships: (1) "at sea" (or cruising); (2) "in port" (includes time spent hotelling, loading and unloading); and (3) "maneuvering." ENTEC also developed a methodology to assign these factors to vessel type according to the weighted average of engine and fuel combinations within each vessel category. This represents the best current summary of emission factors available for large-scale emission inventories.

[7] Efforts to estimate the "energy intensity" of ocean-going ship activity has not improved significantly, particularly at the global scale. The dominant approach for estimating global and national combustion activity in anthropogenic sources has been to evaluate fuel consumption statistics [*Benkovitz et al.*, 2003; *Bouwman et al.*, 1995; *Lim et al.*, 1999; *Marland et al.*, 1999; *Olivier and Berdowski*, 2001; *Olivier et al.*, 1996; *van Amstel et al.*, 1999]. This is essentially a top-down method that assumes that fuel was consumed by engines, boilers, or other equipment under typical conditions; this enables researchers to assume that average emission factors are valid. For many mobile sources (both on-road and non-road), a fuel-based inventory approach has been effective [*Corbett and Fischbeck*, 1997, 2000; *Kean et al.*, 2000; *Singer and Harley*, 1996]. Fuel statistics are well documented and can be obtained for the past several decades. The biggest challenges are assigning fuel consumption to sources according to activity level (or proxy such as installed power) and validating energy statistics for poorly documented nations or sources. On the basis of these methods, large compilations of anthropogenic inventories are available [*Benkovitz et al.*, 1996; *Graedel et al.*, 1993].

[8] An alternative "bottom-up" approach, often used at local and regional scales, estimates fuel consumption from engineering assumptions based on installed power, hours of operation, and operating profile. This has been the method of choice for port-based, local, and regional inventories [*ARCADIS Geraghty & Miller, Inc.*, 1999a, 1999b; *Booz Allen & Hamilton*, 1991; *Carlton et al.*, 1995, 1994; *European Commission and ENTEC UK Limited*, 2002; *Lloyd's Register*, 1993]. One major disconnect in ship emission inventories has been reconciling activity-based inventories with fuel-based inventories. Only recently has this disconnect been reconciled in regional inventories by relying on an explicit fuel-consumption model used for fuel-tax allocation purposes, based on specific vessel characteristics and transit information and validated with tax receipts on a national level [*Corbett*, 2002]. However, reconciling these two approaches is toughest at the global level.

[9] All large-scale inventories that included shipping emissions have relied upon the accuracy of international marine fuel statistics (see Table 1). Recent work by *Endresen et al.* [2003] comes closer to a "bottom-up" approach by applying a statistical fuel consumption model to estimate world fleet fuel consumption and emissions. By using statistical correlations between deadweight tonnage and power, they indirectly estimate power from ship registry statistics and then estimate fuel consumption. Their model results are segregated into international cargo ship activity, domestic cargo ship activity, and non-cargo ship activity for all internationally registered ships above 100 gross registered tons. However, even that work applies assumptions designed to achieve agreement with international marine fuel statistics.

[10] One problem is that not all statistical sources have defined international marine fuels the same way [*Olivier and*

Table 1. Summary of Emissions Estimates and Related Fuel Consumption Data[a]

Source	Fuel Consumption, Million Tonnes	NO_x, Tg N	SO_x, Tg S	Inventory Years Represented
This work	289	6.87	4.72	2001 fleet activity
Endresen et al. [2003]	~165–200	3.45	3.23	average of 1996, 2000
IMO Study of Greenhouse Gas Emissions from Ships [*Skjølsvik et al.*, 2000]	~120–147	3.06	2.83	average of results from two methodo1ogies 1996
Corbett et al. [1999]	~140–147	3.08	4.24	on the basis of 1993 fuel statistics and 1996 fleet data
RIVM and EDGAR databases [*Olivier and Berdowski*, 2001; *Olivier and Peters*, 1999]	~121 (estimated from EDGAR CO_2 data)[b]	2.77	2.45	average of 1990, 1995
Benkovitz et al. [1996]	not provided	1.60	2.30	reported for circa 1985 from 1989–1990 studies

[a]Where previous studies presented multiple years or results from separate methodologies, we report an average of their results for simplicity. While fuel consumption and related emissions are expected to vary from year to year (particularly within a given study's set of assumptions), the differences among these various estimates relates more to input assumptions and data than to interannual variation.

[b]To convert from CO_2 data reported by EDGAR to fuel consumption, the CO_2 emissions were converted to elemental carbon and divided by the average percent by weight of carbon in marine fuel (86%).

Peters, 1999]. Original International Energy Agency (IEA) definitions [*International Energy Agency*, 1987] have been reworded to be more consistent with reporting guidance under IPCC [*Houghton et al.*, 1997]. The IEA defines "international marine bunkers (fuel) [to] cover those quantities delivered to sea-going ships of all flags, including warships. Consumption by ships engaged in transport in inland and coastal waters is not included." The IEA defines national navigation to be "internal and coastal navigation (including small craft and coastal vessels not purchasing their bunker requirements under international marine bunker contracts). Fuel used for ocean, coastal and inland fishing should be included in agriculture."

3. Methodology

[11] We update global fuel estimates for internationally registered ships (i.e., greater than 100 gross registered tons) by adopting a more rigorous methodology for estimating energy consumption that is independent of fuel sales statistics. Rather than estimating ship engine sizes based on vessel tonnage, we directly obtain engine power and apply vessel activity data to compute fuel consumption. Current emissions rates are then applied to this "bottom-up" fuel-use model to estimate emissions from internationally registered ships. Detailed discussion of methodology and assumptions follow, but our calculations can be summarized in the following equation.

$$\text{Fuel Consumption}_{\text{metric tonnes per year}} = \sum_{\text{Subgroup } i=1}^{n} P_{\text{MW}} \cdot F_{\%\text{MCR}} \cdot t_{\text{hrs/yr}} \cdot SFOC_{\text{g/kWh}} \cdot \frac{1}{1000} \quad (1)$$

$$\text{Emissions}_{\text{metric tonnes per year}} = \sum_{\text{Subgroup } i=1}^{n} P_{\text{MW}} \cdot F_{\%\text{MW}} \cdot t_{\text{hrs/yr}} \cdot E_{\text{g/kWh}} \cdot \frac{1}{1000},$$

where $\boldsymbol{P}_{\text{MW}}$ is accumulated installed engine power for each subgroup, $\boldsymbol{F}_{\%\ \text{MCR}}$ is engine load factor based on duty cycle profile, $\boldsymbol{t}_{\text{hrs/yr}}$ is average engine running hours for each subgroup, $\boldsymbol{SFOC}_{\text{g/kWh}}$ is the power-based specific fuel oil consumption, and $\boldsymbol{E}_{\text{g/kWh}}$ is the power-based emissions factor for each pollutant. Figure 1 presents a general schematic of the updated fuel-estimation methodology. (See *Corbett et al.* [1999] for illustration of the previous model.) We estimated vessel activity, fuel consumption, and emissions using the following general methodology and assumptions.

3.1. Identify the Number of Registered Ships and Engines in Service

[12] We consider first the structure of the world's merchant fleet, using current ship registry data [*Lloyd*'s *Maritime Information System* (*LMIS*), 2002] for oceangoing ships greater than 100 gross tonnes (GT). Engine-specific data were supplemented by industry statistics provided by MAN B&W (accessible by one of the authors). We identified a total of 88,660 ships equipped with 116,280 main engines totaling some 280,100 MW (323,000 MW including auxiliary engines). Table 2 classifies these ships by general type and presents main engine and power totals.

[13] About 67% of these ships are powered by four-stroke compression-ignition engines (operating on the compression-ignition, or diesel cycle, and therefore referred to as diesel engines). Some 26% are powered by two-stroke diesel engines. Six percent of the ships have "unknown" diesel engines (i.e., either two- or four-stroke) and only one percent are turbine-driven. Most turbine-driven vessels (80%) are steam turbines with oil-fired boilers; the number of aero-derivative gas turbine engines in the commercial fleet is very low.

[14] When estimating fuel consumption (and related emissions) from ships, the installed engine power rather than the number of engines or vessels is of major importance. The fleet has approximately 84,000 four-stroke engines with total installed power of 109,000 MW and

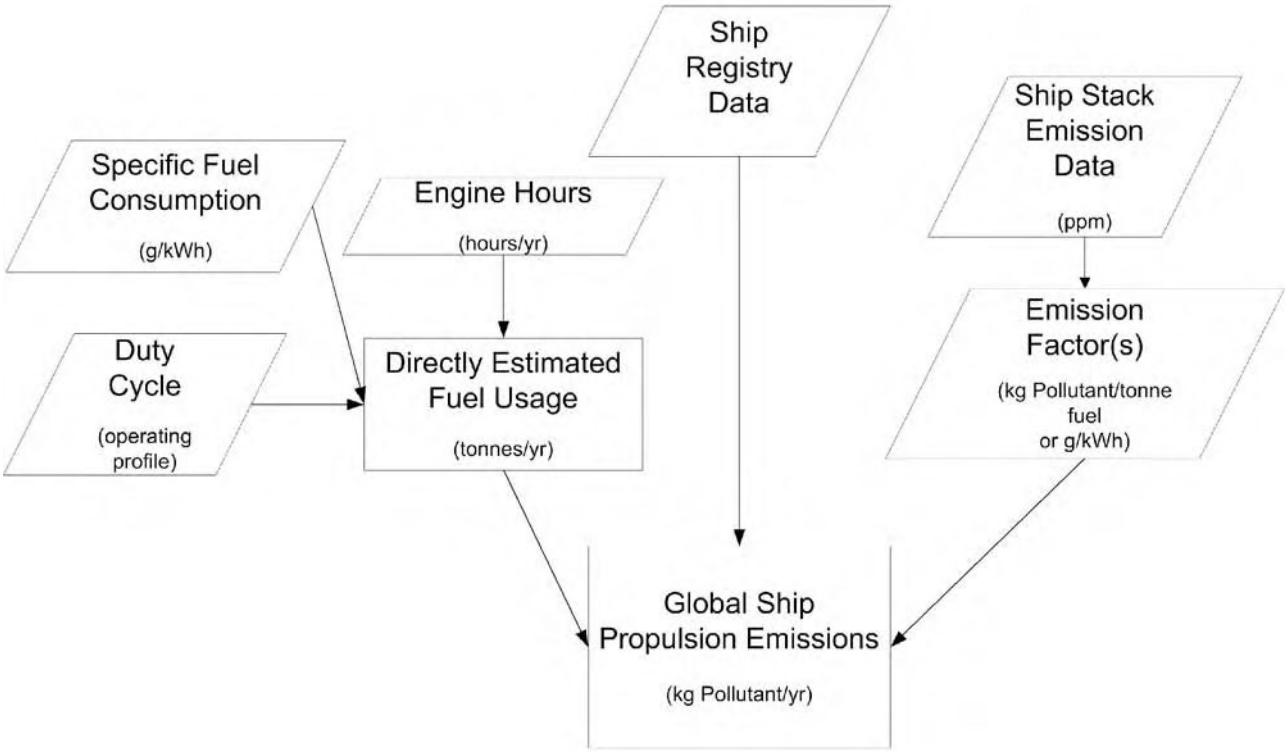

Figure 1. Updated methodology for estimating global ship emissions.

some 27,000 two-stroke engines with total installed power of 164,000 MW. Engines with "unknown" cycle types and "turbines" together make up only about 2.5% of total installed power for main engines. This suggests that 27,000 two-stroke marine prime movers account for almost 60% of the fleet's total energy output and fuel consumption. The majority of these engines are large-bore, low-speed diesel engines above 10 MW rated output. Two-stroke engines are the main consumers of bunker fuel and therefore the major sources of oceangoing ship emissions, followed by four-stroke engines.

[15] Approximately 50% of the power produced by marine two-stroke diesel engines comes from some 9800 low-speed engines manufactured by MAN B&W. Data used in this analysis were cross-checked with technical data for engines manufactured by the other major manufacturers. This enables us to ensure that technical engine data used for this study and the assumptions applied for this analysis closely reflect actual industry conditions.

[16] On the basis of prior work [*Adcock and Stitt*, 1995; *Corbett and Fischbeck*, 1997], we include the nearly 20,000 military vessels worldwide, acknowledging that these engines have very different activity profiles. The naval ship is designed for sustained speeds in excess of their endurance (cruise) speed [*Markle and Brown*, 1996]; as a result, the installed power in the world Navy is nearly 40% of the total

Table 2. Profile of World Fleet, Number of Main Engines, and Main Engine Power[a]

Ship Type	Number of Ships	Percent of Fleet	Number of Main Engines	Percent of Main Engines	Installed Power (MW)	Percent of Total Power	Percent of Energy Demand
			Cargo Fleet				
Container vessels	2662	2%	2755	2%	43,764	10%	13%
General cargo vessels	23,739	22%	31,331	21%	72,314	16%	22%
Tankers	9098	8%	10,258	7%	48,386	11%	15%
Bulk/combined carriers	8353	8%	8781	6%	51,251	11%	16%
			Non-Cargo Fleet				
Passenger	8370	8%	15,646	10%	19,523	4%	6%
Fishing vessels	23,371	22%	24,009	16%	18,474	4%	6%
Tugboats	9348	9%	16,000	11%	16,116	4%	5%
Other (research, supply)	3719	3%	7500	5%	10,265	2%	3%
Registered fleet total	**88,660**	**82%**	**116,280**	**77%**	**280,093**	**62%**	**86%**
Military vessels	19,646	18%	34,633	23%	172,478	38%	14%
World fleet total	**108,306**	**100%**	**150,913**	**100%**	**452,571**	**100%**	**100%**

[a]The world fleet represents internationally registered vessels greater than 100 gross tons; the cargo fleet represents those vessels whose main purpose is transporting cargo for trade. Percent of energy demand mainly adjusts for reduced activity (in loads and hours) by military vessels under typical operations.

Table 3. Summary of Engine Profiles From Manufacturer and Operator Survey

Ship Types	Installed Main Engines[a]	Average Operating Hours per Year	Average Engine Load, % of Installed Power
Bulk carriers, tankers	two-stroke: 91% four-stroke: 6%	6500	55% if low freight rates, 80% if normal freight rates
Large container vessels (>1500 TEU)	two-stroke: 100%	6700–7200	80%
Small container vessels (<1500 TEU)	two-stroke: 55% four-stroke: 45%	6300–6700	80%
Crude oil carriers	two-stroke: 80% four stroke: 19%	6700–7300	75%
Lift-on lift-off (LoLo)	two-stroke: 55% four stroke: 32%	6000	80%
Roll-on roll-off (RoRo)	two-stroke: 11% four stroke: 77%	6500–7000	80–85%
Passenger vessels	primarily four-stroke	4000	55%
Fishing vessels[b]	two-stroke: 3% four stroke: 69%	6000–7000	70%

[a]On the basis of installed power.
[b]A number of fishing vessels are not powered by diesel engines, but by Otto cycle, spark-ignited engines.

installed power of the entire commercial fleet. However, the world's Navy ships use less energy than their installed power would suggest, because most of the time they operate in peaceful conditions at endurance speeds, partly to achieve fuel/cost savings. Average engine power characteristics for the U.S. Navy show that military ships operate below 50% power for 90% of the time that they are underway [*Naval Sea Systems Command* (*NAVSEA*), 1994]. Moreover, military vessels spend more time in port than modern commercial ships. Where commercial ships cannot effectively earn profits unless underway, Navy studies claim that military ships typically spend as much as 60% to 70% of their time in port [*NAVSEA*, 1992]; this is confirmed by public records of Naval ship activity, which showed that typical deployment rates range between 40% and 55% of the fleet. This means that in practice, military ships would demand some 14% of total energy required by the World Fleet (commercial plus military fleets), much less than their installed power implies (see Table 2).

[17] Our best estimate of fuel consumption used a more detailed version of this general methodology, based on industry vessel and engine data typically not available in the ship registries. For example, we subdivided each of the main engine groups to define five main groups of propulsion engines onboard vessels: (1) two-stroke low-speed engines; (2) four-stroke medium-speed engines; (3) four-stroke high-speed engines; (4) turbines; and (5) others. Each main group was also subcategorized as: (1) large-bore engines (high engine power); (2) medium-bore engines (medium engine power); (3) small-bore engines (lower engine power); and (4) turbines (steam and gas). This resulted in a total of 132 subgroups (with an average of only 900 engines in each). Auxiliary engines were treated as their own subgroup. We adjusted our activity estimates to include only engines on active vessels (e.g., consuming fuel); on average only about 1% of all ships are laid-up or under repair [*LMIS*, 2002].

3.2. Estimate the Number of Engine Service Hours

[18] For typical engine models within these subgroups, we surveyed ship operators and naval engineers, project engineers, and marine engines sales personnel for average yearly running hours, annual average engine loads, and fuel type. Table 3 summarizes the information obtained from a review of manufacturer engine files and consultation with operators of larger vessels (typical of most of the installed power on ships). On the basis of operator and manufacturer survey data, marine engines operate about 6500 hours per year on average, or about 74% of the year.

3.3. Determine Engine Load Profiles, Including Full-Cruise Power and Duty Cycle

[19] We assume that typical maximum power in service is 80% of rated engine power, per commonly accepted guidelines for heavy-duty engines available in various engine specifications. Most studies have applied the International Organization for Standardization (ISO) standard duty cycles for marine engines [*ISO*, 1996]; however, our survey data suggest that, on average, main engines may not operate according to these default profiles. We apply survey data and our own industry experience to establish an appropriate duty cycle for oceangoing transport ships (cargo vessels and passenger ships), and we apply the standard E3 duty cycle for oceangoing non-transport ships (fishing and factory vessels, research and supply ships, tugboats). For auxiliary engines, an estimated 50% average load and 3500 operating hours per year was used. (Fuel estimates are very dependent upon duty cycle assumptions, as our later discussion of uncertainty shows.)

3.4. Apply Average Fuel Consumption Rates for Each Engine-Fuel Combination

[20] For main engines, we matched engine types in each subgroup with the fuels consumed by these engines [*ISO*, 1986, 1987]. Ninety-five percent of two-stroke, low-speed engines use heavy fuel oil (HFO or residual fuel), and 5% are powered by marine distillate oil (MDO). Fuel consumed by 70% of the four-stroke, medium-speed engines is HFO, with the remainder burning either MDO or marine gas oil (MGO). Four-stroke, high-speed engines all operate on MDO or MGO. We assume that the unknown diesel engine types are small, high-speed engines all operating on MDO or MGO, steam turbines all have boilers fueled by HFO, and gas turbines are powered by MGO.

[21] The average fuel consumption is a composite of the fuel-usage rates at various engine loads (dependent on duty cycle). Marine engine data on actual fuel consumption rates were used to establish a typical average fuel consumption rate, applied to the average engine load across the duty cycle. In general, cargo ships have more fuel-efficient, larger engines than non-transport ships. Typical fleet-average fuel consumption rates were 206 g/kWh for transport ships and 221 g/kWh for non-transport ships, although this is a simplified summary of our subgroupings for the best estimate. There can be transport ships with specific fuel consumption rates of >221 g/kWh and non-cargo ships with consumption rates of <206 g/kWh; more decisive

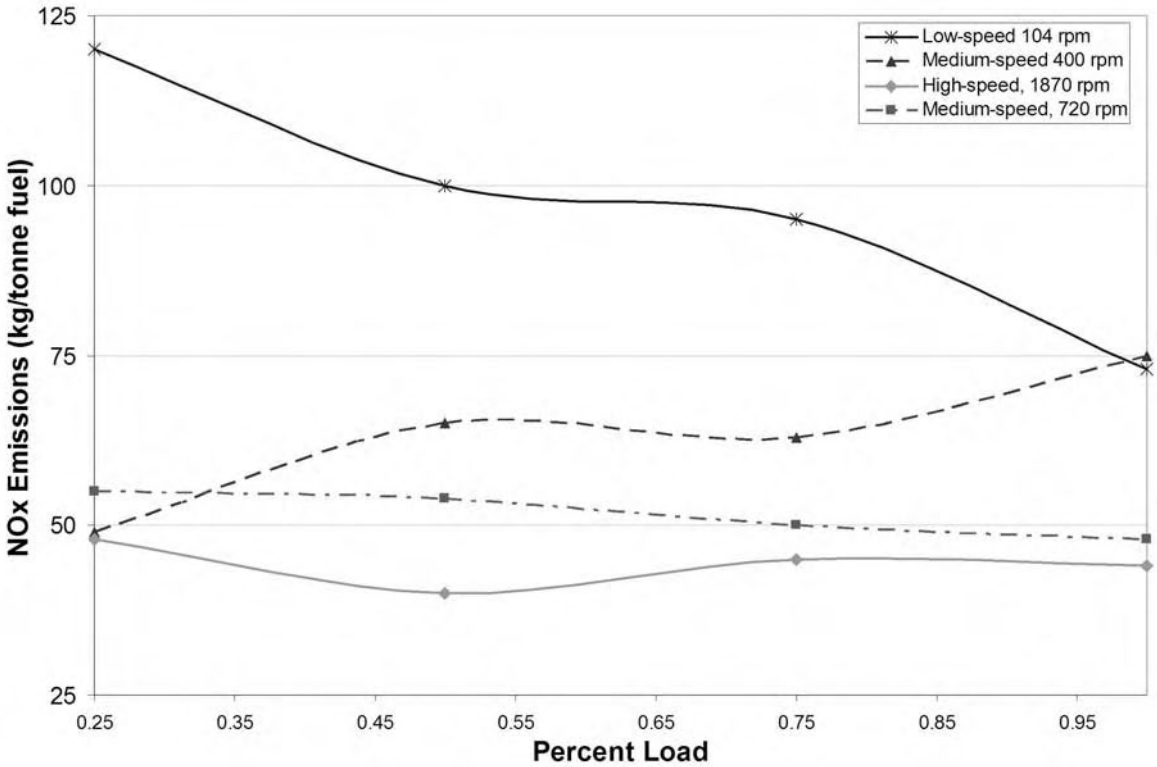

Figure 2. Emission factors for different diesel engines (MAN B&W data).

criteria are the size of the engines, the fuel they burn, and the number of years they have been in operation (wear conditions). By using actual fuel consumption data, we include these factors.

3.5. Calculate the Annual Fuel Consumption for All Engine Sub-Groups

[22] Aggregate these calculations by vessel type.

3.6. Estimate Vessel-Specific Power-Based Emissions Factors

[23] Emission factors depend upon many parameters, but engine make and type, size, speed, and load are of paramount importance. Other factors are type and specification of the fuel, engine design (in-line or V-type), mode of operation (constant speed or propeller law), and number of cylinders. In our own first calculations, we used measured emissions and measured fuel consumption rates from more than 50 curves for different engine types to validate our methodology.

[24] To illustrate how emissions factors may vary by engine type and load, we plotted a selection of four typical emission factor curves for (state-of-the-art) NO_x-optimized engines [*Koehler*, 2002a, 2002b, 2003]. These engines included: (1) a large (1-m bore) two-stroke, low-speed diesel engine rated at 5700 kW/cylinder; (2) a large (0.58-m bore) four-stroke, medium-speed diesel engine rated at 1300 kW/cylinder; (3) a smaller (0.32-m bore) medium-speed diesel generator set rated at 480 kW/cylinder; and (4) a typical (0.185-m bore) high-speed diesel engine rated at 192 kW/cylinder. The first two engines represent typical main engine ratings and the last two represent typical auxiliary engine ratings. NO_x emission factors are plotted by load in Figure 2. (Note that existing even larger low-speed, two stroke diesel engines can have emission factors in excess of 110 g NO_x/kg fuel. These curves are only typical examples.) For the most interesting load points between 50% and 100%, there is not much variation of the emission profile for each given engine type. This limits the NO_x calculation error, should the real average load for a certain group or sub-group of engines deviate from the average value. At 75% load, all the low-speed two-stroke engines for which measured data were reviewed have emissions factors ranging from about 80 to 110 kg NO_x/tonne fuel, similar to all previous studies. When the composite average emission factor is calculated by using the duty cycle weighting, these fuel-based results are very similar to recent analyses by ENTEC, which reported both fuel-based and power-based emissions factors.

[25] Some literature suggests that fuel-based factors are inferior to power-based factors because fuel-based factors do not show the same increase in emissions factors at low loads [*Energy and Environmental Analysis, Inc., and Sierra Research*, 2000]. The ENTEC report clearly reconciles these differences by stating "emission factors in kg/tonne fuel can be obtained by taking the g/kWh factor and dividing by the specific fuel consumption." When this fuel-based conversion is done, the relatively higher fuel consumption at low loads and the relatively higher emission rates (in g/kWh) at low loads tend to cancel out; the result is that fuel-based emission factors are more flat over

Table 4. Fleet-Average Summary of In-Service Emissions Factors (g/kWh)

Ship Type	NO_x	SO_x[a]	CO_2	HC	PM[b]
Cargo vessels	17	10	655	0.6	1.25
Non-cargo	16	10	702	0.5	1.25
Auxiliaries (kg/tonne)	59	38	3180	1.8	2.50

[a]On the basis of an average fuel-sulfur content of 2.5% for heavy fuel oil.
[b]PM factors for marine diesels remain very uncertain, are still difficult to measure, and can be defined differently. We apply the latest published average values for in-service marine engines [*European Commission and ENTEC UK Limited*, 2002].

the load range. Overall, the inventory results are nearly identical using either approach, if the fuel consumption is directly based on engine activity, which our bottom-up analysis is.

[26] Starting with the average power per engine, based on the duty cycle weightings in Step 3 above, our methodology is similar to the ENTEC approach [*European Commission and ENTEC UK Limited*, 2002]. These emission factors represent in-service engines in the current fleet. We estimate the weighted average emissions for each vessel type, based on the engine-fuel combinations for each type. For the purposes of this study, we focused on the "at-sea emissions factors" presented by ENTEC, since most of the fleet's main engine power is at full-cruise or slow-cruise loads. We apply ENTEC assumptions for average fuel-sulfur levels, discussed above. For auxiliaries, we also used ENTEC's approach for emissions factors. Fleet-average emission factors are summarized in Table 4.

3.7. Estimate Emissions Using Power-Based Emissions Factors for Engine Sub-Groups

[27] Aggregate these calculations by subgroup and vessel type.

4. Results

[28] We estimate that world fleet fuel consumption, calculated for all main and auxiliary marine engines in the internationally registered oceangoing fleet (including military vessels), is ~289 million metric tonnes annually. Heavy fuel oil (HFO) represents nearly 80% of the fuel consumed by these engines. This is considerably greater than (more than double) the amount of fuel (and corresponding CO_2) reported for international marine bunkers. Furthermore, the annual emissions from ships (particularly NO_x, SO_x, and CO_2) are significantly greater than previously considered (in our earlier work and in others' published estimates; see Table 1). NO_x emissions are 6.87 Tg N per year, also more than twice as large as earlier estimates. Sulfur emissions are 6.49 Tg S annually, approximately 53% more than previously estimated. (Closer agreement for sulfur results from better data about actual fuel-sulfur levels in the fleet.) CO_2 emissions are 249 Tg C per year. Particulate matter (PM_{total}) and hydrocarbon (HC) are estimated to be 1.64 Tg PM_{10} and 0.769 Tg HC, respectively.

[29] These results raise at least one important question: Why is there such a large discrepancy between fuel statistics and actual fuel usage by internationally registered ships? The question can be posed in three parts.

4.1. Are the Previous Fuel-Based Models Systematically Biased by Assuming That Internationally Registered Ships Would Exclusively Use Fuel Identified as Sold for International Vessel Activity?

[30] This work and the recent study by *Endresen et al.* [2003] both support the possibility that international fuel statistics do not describe the total fuel consumed by the world fleet of ships. Additional evidence is provided by *Olivier and Peters* [1999]. Research has shown that there often can be a tendency to underestimate systematic error in models and experiments [*Morgan and Henrion*, 1990].

4.2. Could the Bottom-Up Model Presented Here be in Error?

[31] Our model is essentially the same bottom-up approach that fleet operators and designers would use to evaluate fuel consumption. It is also very similar to the methodologies used in local and regional non-road and on-road inventories. However, applying this methodology globally requires a number of inputs be applied to many similar vessels and engines, or that very high resolution be used in classifying vessel types and engine characteristics into subgroups. In our best estimate, we use 132 subgroups. Scaling-up of the methodology for fuel estimation may itself insert bias or error. To evaluate the potential for our model to significantly overestimate fleet fuel use, we performed an analysis of the sensitivity of our model to uncertain inputs and assumptions.

[32] For the sensitivity analysis, we simplified the subgroups primarily by vessel type and defined the uncertain inputs to include the ranges of characteristics that we aggregated into these broader subgroups (Table 5). We also applied only two duty cycles to the commercial fleet, for simplicity and because they are in close agreement with the fleet operator responses used in our best estimate. These duty cycle profiles (Tables 6 and 7) are applied to the adjusted full-cruise power of 80% full load, and speed relationships follow the propeller law. We varied 10 general inputs (shown in Table 3) between lower, best estimate, and upper bounds using triangle distributions. Use of triangle distributions is an accepted way to perform analyses of uncertainty and sensitivity where the actual shape of the probabilistic distribution is not known [*Morgan and Henrion*, 1990]. Using Monte-Carlo simulation, we evaluated the impact of simultaneously varying each parameter according to the triangle distributions on the estimates for fuel consumption and emissions for each pollutant. Figure 3 presents the output sensitivity to uncertain average input variables for fuel consumption of the World Fleet and Cargo Fleet. Also shown is a summary of international fuel statistics reported in the World Energy Database (available from Energy Information Administration, World Energy Database and International Energy Annual 2001, available at http://www.eia.doe.gov/emeu/world/main1.html), with error bars representing differences between various published sources for international marine fuel statistics [*Skjølsvik et al.*, 2000].

[33] Note that our best estimates are the result of setting input parameters deterministically to values we believe may

Table 5. Variable Ranges for Uncertainty Analysis

Input Variable	Lower Bound	Base-Case Estimate	Upper Bound
Engine hours per year			
Main engines	5500	6500	7010
Auxiliaries[a]		3500	
Engine power at "full cruise"	75% of rated	80% of rated	80% of rated
Main engine duty cycle[b]:			
Full cruise	0.10	0.65 (T), 0.20 (NT)	0.82
Slow cruise	0.15	0.20 (T), 0.50 (NT)	0.50
Precautionary sponsoreed	0.02	0.10 (T), 0.15 (NT)	0.15
Maneuvering	0.01	0.05 (T), 0.15 (NT)	0.15
Specific fuel consumption, g/kWh			
Transport vessels		206	
Non-transport vessels	−10%	221	+10%
Auxiliaries[a]		230	
Auxiliary fuel use	−10%	modeled estimate	+10%
NO_x emission factor, g/kWh			
Transport vessels		17.0	
Non-transport vessels	−20%	16.0	+20%
Auxiliaries		13.7	
SO_x emission factor,[c] g/kWh			
Transport vessels		10	
Non-transport vessels	−10%	10	+10%
Auxiliaries		4.6	
CO_2 emission factor, g/kWh			
Transport vessels		655	
Non-transport vessels	−10%	702	+10%
Auxiliaries		696	
HC emission factor, g/kWh			
Transport vessels		0.6	
Non-transport vessels	−25%	0.5	+25%
Auxiliaries		0.4	
PM emission factor,[d] g/kWh			
Transport vessels		1.25	
Non-transport vessels	−25%	1.25	+25%
Auxiliaries		0.80	

[a]Auxiliary engines were all assumed to have a composite duty cycle of 50%, with sensitivity to auxiliary fuel estimate evaluated independent of duty cycle. Auxiliary fuel estimate ~15 million metric tonnes fuel per year.

[b]T, transport ship; NT, non-transport ship. Duty cycle changes were defined with correlations to "full cruise" power, because the total weighting cannot exceed 1.00.

[c]SO_x emissions from diesel engines are strictly related to the sulphur content of the fuel. These factors are based on the weighted-average fuel sulfur levels, per the discussion. On average, they represent an average fuel-sulfur content of 2.5%.

[d]PM factors for marine diesels remain very uncertain, are still difficult to measure and can be defined differently. We apply the latest published average values for in-service marine engines.

be most representative; these produce an estimate that does not cross the CDFs at the fiftieth percentile. This is partly because our effort to characterize uncertainty attempted to include reasonable input ranges that might best agree with published statistics. For example, we would need to reduce engine activity hours by some 20% to 63% to get agreement between our fuel estimates and previous research, depending on which estimates we try to match and whether we include only cargo ships, all commercial ships, or all international ships including military vessels. It appears unlikely that published fuel statistics could provide enough fuel for the world fleet, and only if vessel activity assumptions are significantly reduced.

[34] Figure 4 presents uncertain input factors that contribute the greatest uncertainty in the overall estimate for fuel consumption in the World Fleet. These inputs necessarily all relate to the methodology by which we estimate engine activity, power, and specific fuel consumption. The most important uncertain inputs relate to vessel duty cycle and hours of operation, which are data that may be obtained directly from ship operators. Currently, regional inventories of marine activity in metropolitan port cities are focusing on the quality and resolution of these data. This should enable better accuracy of large-scale inventories over time.

[35] Figure 5 presents the output sensitivity distribution for NO_x emissions from the World Fleet and the Cargo

Table 6. Representative Duty Cycle Applied to Transport Ships Sensitivity Analysis

Transport Ships	Full Cruise	Slow Cruise	Precautionary Speed	Maneuvering
Speed	93% of rated	85% of rated	46% of rated	23% of rated
Power	80% of rated	61% of rated	10% of rated	1% of rated
Speed (adjusted)	100%	91%	80%	63%
Power (adjusted)	100%	76%	12.50%	1.20%
Weighting factor	0.65	0.2	0.1	0.05

Table 7. Duty Cycle (ISO E3) Applied to Non-Transport Ships Sensitivity Analysis

Non-Transport Ships	Full Cruise	Slow Cruise	Precautionary Speed	Maneuvering
Speed	93% of rated	85% of rated	46% of rated	23% of rated
Power	80% of rated	61% of rated	10% of rated	1% of rated
Speed (adjusted)	100%	91%	80%	63%
Power (adjusted)	100%	76%	12.50%	1.20%
Weighting factor	0.2	0.5	0.15	0.15

Fleet, along with the previously reported uncertainty analysis [*Corbett and Fischbeck*, 1997; *Corbett et al.*, 1999]. Uncertain energy intensity in the fleet dominates the uncertainty in pollutant inventories. Figure 6 presents uncertain input factors that contribute the greatest uncertainty in the overall estimate for NO_x emissions in the World Fleet. All uncertain inputs except the NO_x emissions factor relate to the model's estimates of engine activity for commercial and military vessels. In other words, uncertainty in the NO_x emission factor is less important to our estimate than uncertainty in the vessel activity. Similar results apply to other pollutants; in fact, only the poorly known PM factor ranks higher than duty cycle in contribution of uncertainty.

[36] The fifth and ninety-fifth percentile values for annual NO_x estimates in the World Fleet using our updated methodology are shown in Table 8. It is worth noting that even for the subset of the world fleet most likely to have been included in fuel-based model assumptions, the prior best estimate of 3.08 Tg N per year is lower than the updated fifth percentile estimate using engine activity to estimate fuel and emissions.

[37] Similarly, we performed an analysis of uncertainty for other pollutants (Table 8). The updated estimates for SO_x emitted by the World Fleet are only 53% higher than prior estimates, and for the Cargo Fleet the estimate for SO_x emissions is within 12% of previous estimates. Of course, since SO_x emissions are directly dependent upon fuel sulfur, other assumptions about fuel sulfur content would significantly modify these bounds. As with sulfur emissions, improved data about PM from large marine engines could modify PM upper and lower bounds. Moreover, this analysis adopts the uncertainty ranges on emission factors reported by ENTEC, which may be based on more complete test data for pollutants other than PM.

[38] Figure 7 presents uncertain input factors that contribute the greatest uncertainty in the overall estimate for SO_x emissions in the World Fleet. Figure 8 presents uncertain input factors that contribute the greatest uncertainty in the overall estimate for PM emissions in the World Fleet. Because of the relatively good fleet statistics on fuel sulfur, the fuel sulfur factor (a direct function of fuel sulfur) is less important than uncertain inputs for vessel activity. However,

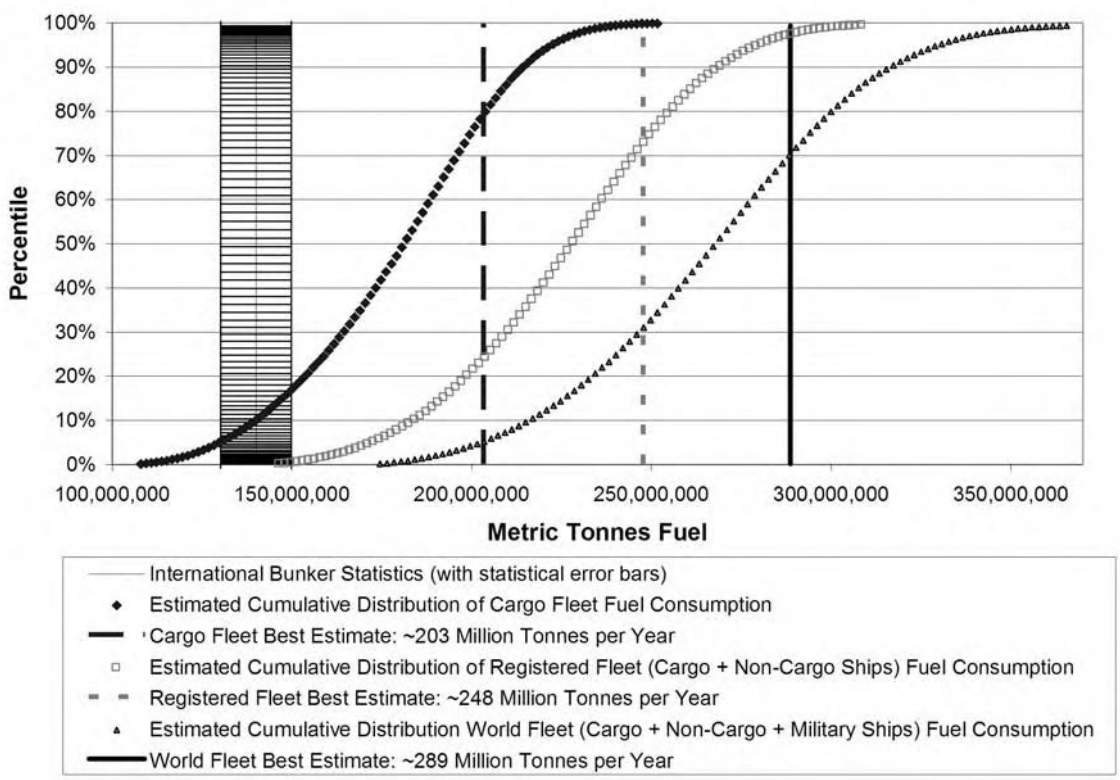

Figure 3. Uncertainty comparison of prior and updated fuel consumption estimates for oceangoing fleet.

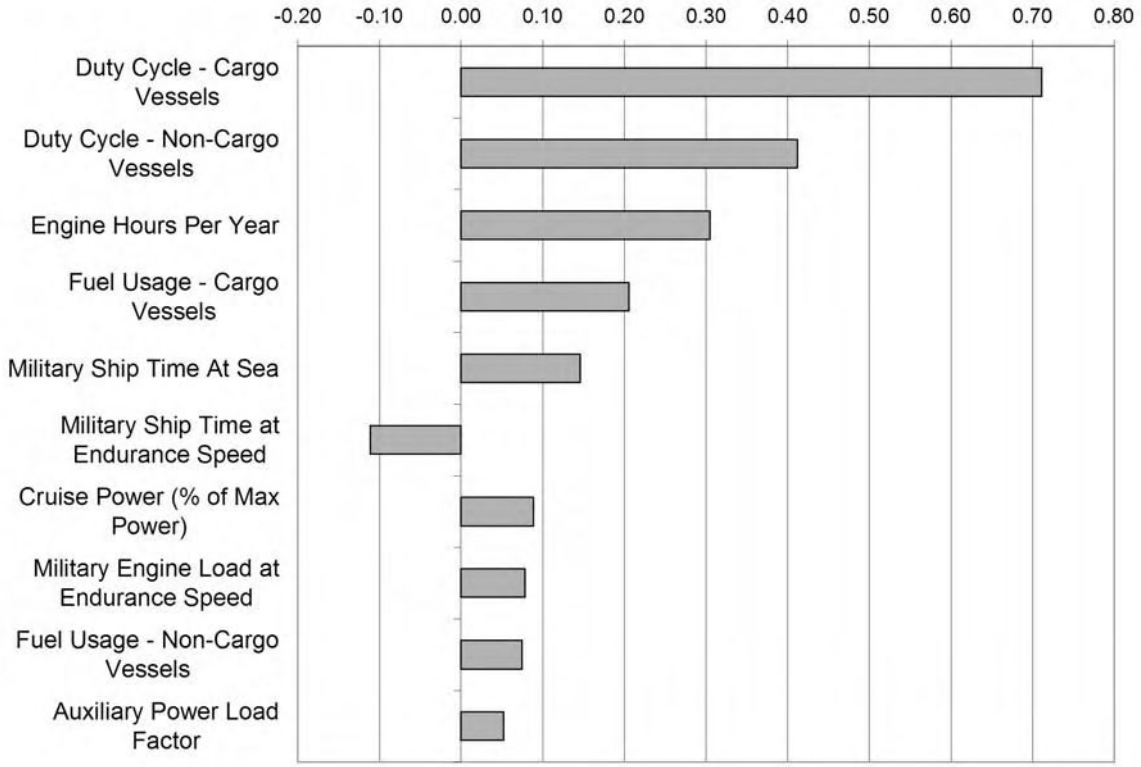

Figure 4. Sensitivity analysis of uncertain inputs by rank correlation with overall uncertainty of world fleet fuel consumption.

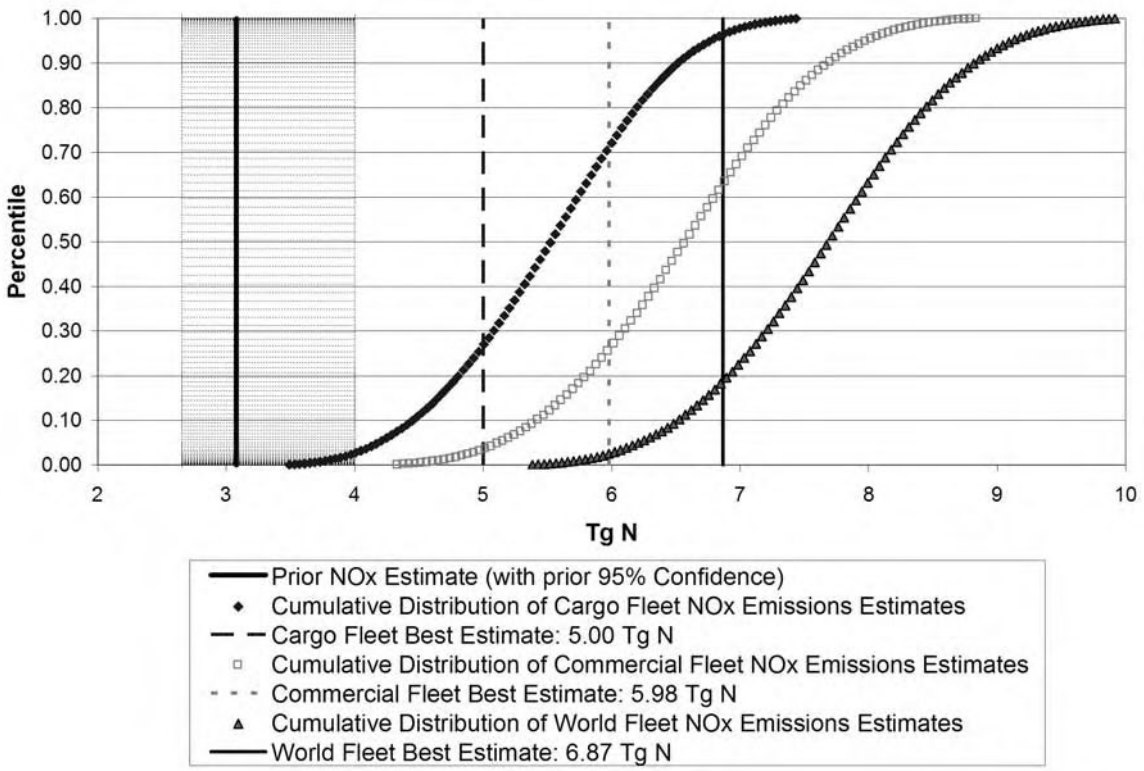

Figure 5. Uncertainty comparison of prior and updated NO_x emissions estimates for oceangoing fleet.

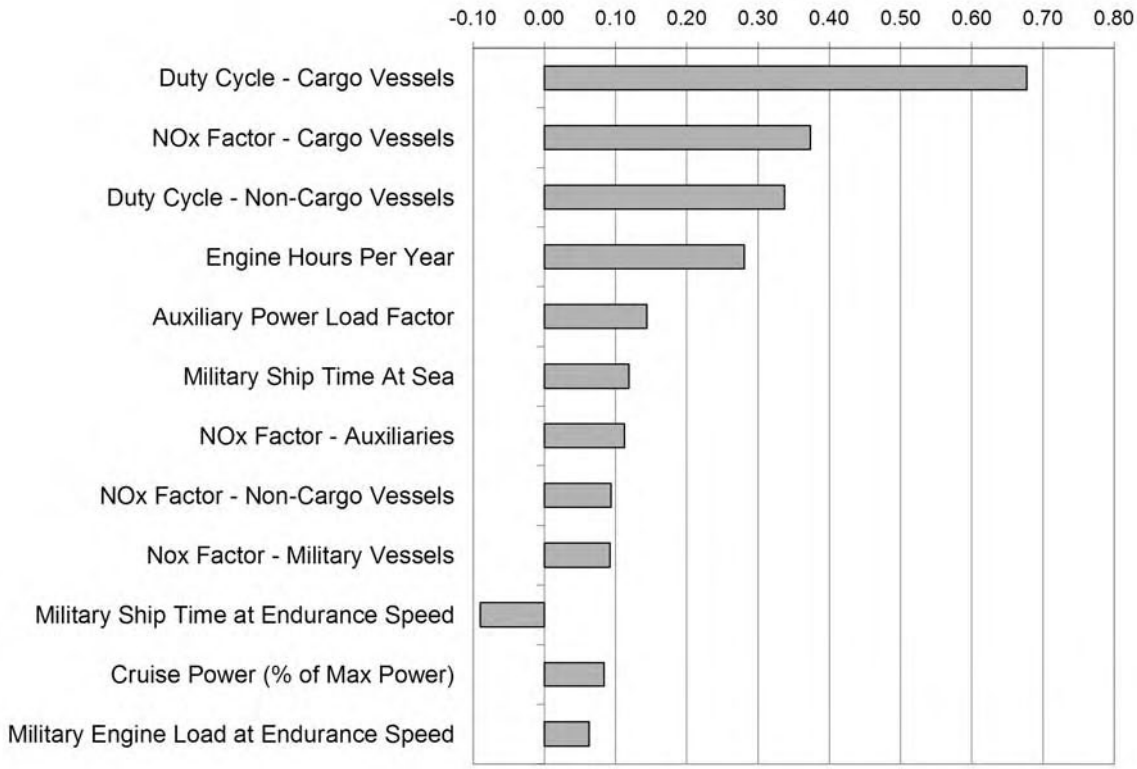

Figure 6. Sensitivity analysis of uncertain inputs by rank correlation with overall uncertainty of world fleet NO_x estimate.

emission factors for PM remain the most important uncertain input.

4.3. If the Current Model is More Accurate in Describing the Fuel Used Annually by International Vessels, Can World Fuel Inventories Account for the Discrepancy Between International Marine Fuel Statistics and Actual Ship Fuel Consumption?

[39] Clearly, internationally registered vessels must be consuming domestic supplies of marine fuels. However, fuel statistics are generally well understood, especially for the OECD nations that sell most of the world's marine fuels (World Energy Database 2001). We might suggest that international marine fuels are only used by cargo transport vessels, and that non-transport vessels are generally operating domestically. With this correction, fuel identified as international marine bunkers would supply only 49% of the ships in the fleet, and only 46% of marine engines on cargo vessels.

[40] Unfortunately, reconciling fleet fuel consumption between international and domestic fuel supplies is not simple. To get agreement with international fuel statistics, we must assume that about 31% of the fuel consumed by transport vessels occurs while operating in short sea or coastwise service using domestic fuels and that all non-transport ships (fishing, research, tugs, etc) operate on fuel included in domestic inventories.

[41] To test whether this could be reasonable, we compared our marine fuel estimates with domestic residual fuel consumption and international residual bunkers statistics (World Energy Database 2001). Evidence that some of the 600+ million metric tons of fuel used domestically could be used by the ships in our "bottom-up" inventory would suggest at least that the World Energy Database is consistent with our results. We reconstructed a time series of fuel usage by oceangoing ships using historical records for installed power and a simplified inventory calculation for past years. We then compared our fuel consumption estimate for marine heavy fuel oil with published consumption statistics for residual fuel. Only about 13% of world domestic residual consumption would be necessary to account for the discrepancy between international fuel

Table 8. Comparisons of Updated Emissions (Including 5th and 95th Percentiles) With Previous Best Estimates

	NO_x (Tg N)	SO_x (Tg S)	CO_2 (Tg C)	HC (Tg CH_4)	PM (Tg PM_{10})
Cargo fleet	5.00 (4.17, 6.79)	4.72 (4.21, 6.54)	176 (164, 249)	0.574 (0.459, 0.778)	1.19 (0.755, 1.97)
Commercial fleet	5.98 (5.11, 8.01)	5.73 (5.17, 7.82)	214 (201, 298)	0.675 (0.556, 0.902)	1.45 (1.01, 2.31)
World fleet	6.87 (6.19, 9.15)	6.49 (6.12, 8.81)	249 (244, 343)	(0.672, 1.02)	1.64 (1.25, 2.55)
Previous estimate by *Corbett et al.* [1999]	3.08	4.24	123	0.343	0.853

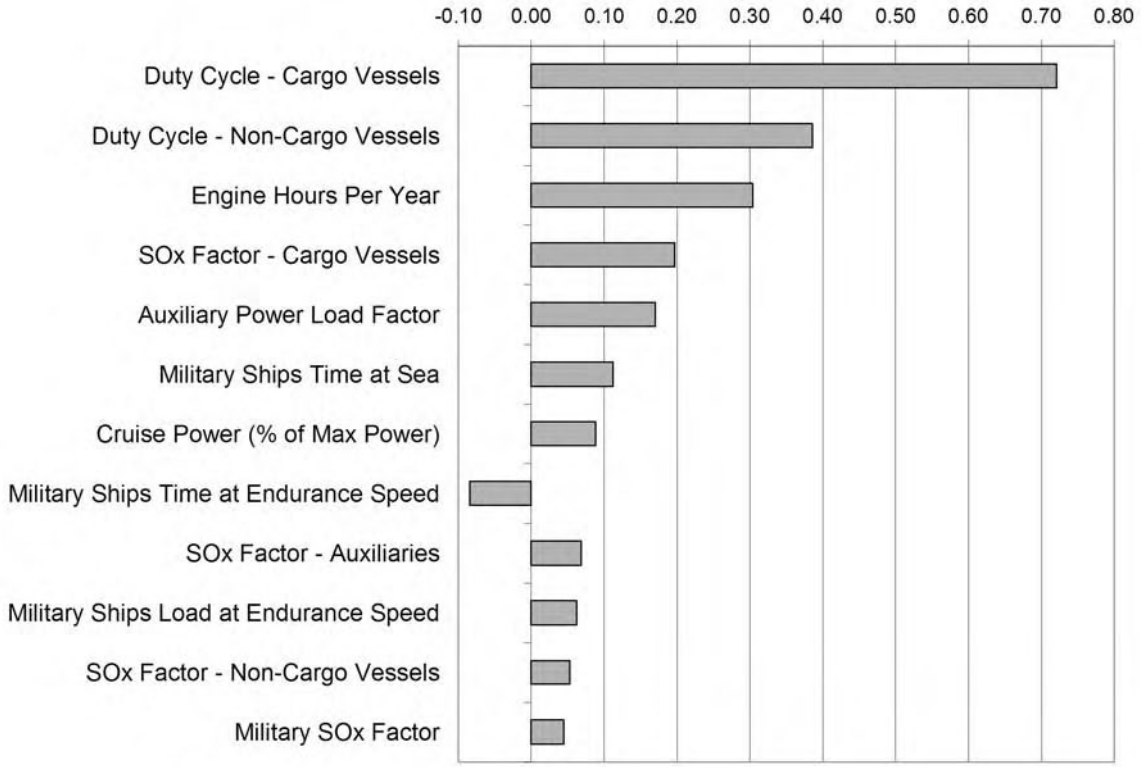

Figure 7. Sensitivity analysis of uncertain inputs by rank correlation with overall uncertainty of world fleet SO_x estimate.

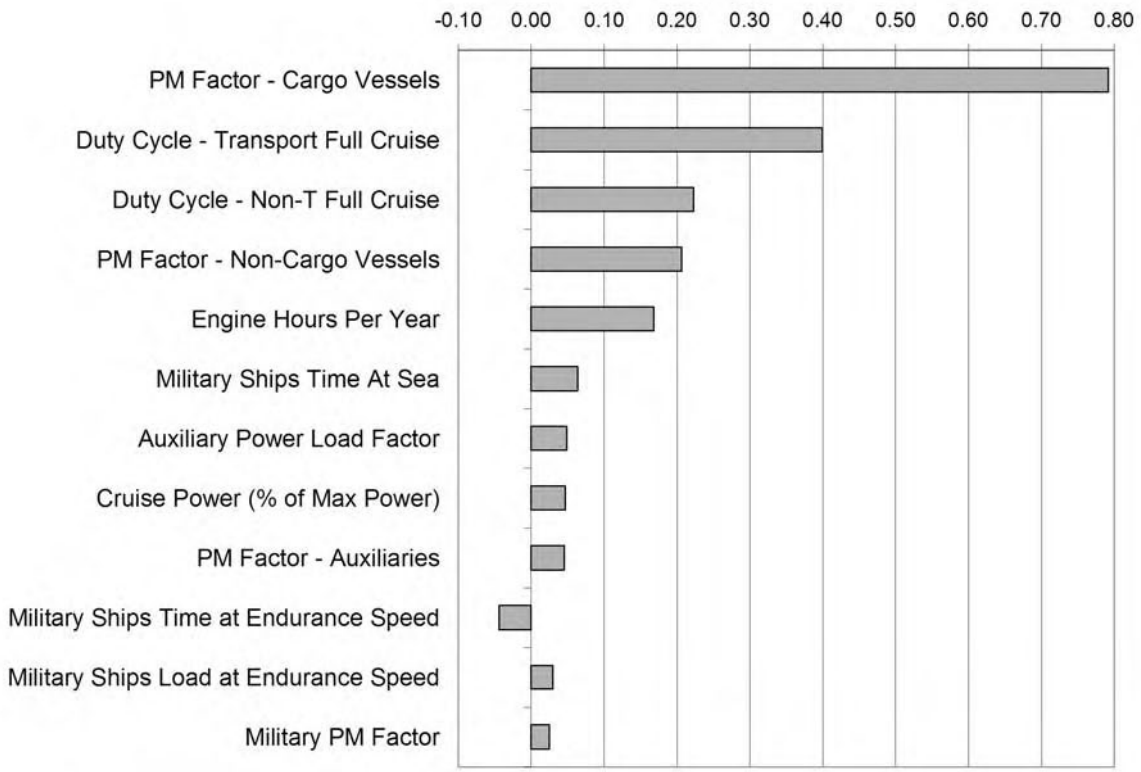

Figure 8. Sensitivity analysis of uncertain inputs by rank correlation with overall uncertainty of world fleet PM estimate.

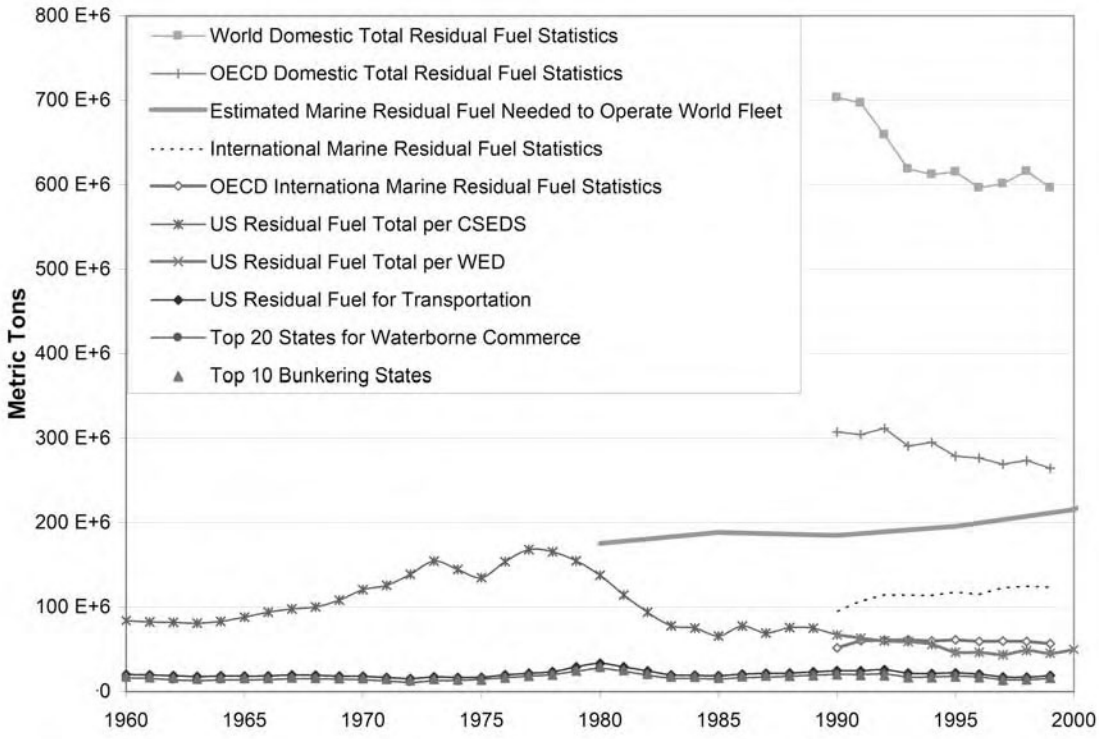

Figure 9. Comparison of world consumption of domestic residual fuel and international bunkers for 1990–1999. (Estimated marine fuel use curve represents this work.) Also shown are United States domestic residual fuel statistics since 1960, including residual fuel for transportation. Nearly 100% of residual fuel used in transportation is used by oceangoing marine vessels; nearly all inland vessels, harbor craft, and small commercial workboats use diesel fuel. See color version of this figure at back of this issue.

statistics and our estimates (Figure 9). Considering strictly the OECD nations, between 28% and 29% of domestic residual fuel would account for this difference.

[42] This comparison is suggestive but not conclusive without knowing how much residual fuel was actually sold to stationary versus mobile domestic sources. We turned to the Combined State Energy Data System (CSED) statistics for the United States [*Energy Information Administration*, 1999], the world's largest provider of marine fuels over the past ten years at least – accounting for some 21% of marine residual sold by OECD nations (World Energy Database 2001). The Energy Information Administration publishes state-by-state consumption statistics by fuel type and by end-use sector. We identified residual fuel consumption in the transportation sector in the United States domestic inventory as marine residual fuels, primarily because no other mobile source category consumes residual fuel. We compared states that recorded the largest consumption of residual fuels by ships with the top states for waterborne commerce [*Corbett and Fischbeck*, 2000; *U.S. Army Corps of Engineers*, 2001].

[43] Results (included in Figure 9) provide four important insights. First, total residual fuel consumption reported in the CSEDS agrees exactly with domestic residual consumption statistics in the World Energy Database, providing a consistency check. Second, the 10-year average residual consumption by marine transportation in the United States equals more than 40% of total residual consumption, more than enough to accommodate the difference between our estimates and international residual fuel statistics. Third, the top states for waterborne commerce (measured by total cargo volume) are also the top states for marine fuel sales. This suggests that most of domestic marine fuel consumption is going to cargo transport ships, and to vessels that directly support commerce. Finally, while domestic land-based consumption of residual fuel has decreased significantly over the past 2 decades, marine transportation fuel consumption has not changed much, either internationally or domestically (Figure 9).

5. Scientific and Policy Implications

[44] Scientists need an accurate and complete inventory, not one limited by the reported international fuel sales that ignore "domestic fuel" usage by ocean shipping. Our inventory may provide better estimates than previous work, but it cannot directly suggest how large ship emissions impacts may be at the local and regional levels. Clearly, more research is needed to assign geographically the "domestic emissions" from internationally registered ships, perhaps by reconciling inventories conducted at different geographic scales.

[45] Our results and those of *Endresen et al.* [2003] suggest the need to revisit the geographic distribution of ships. Endresen et al. consider AMVER as potentially better than COADS, but they report important bias toward

larger cargo vessels less likely to be operating within domestic routes. A profile of oceangoing ship traffic and emissions using AMVER's distribution would be inconsistent with our results that suggest more ship emissions may be occurring closer to land than currently characterized. Perhaps only emissions resulting from the use of international marine fuels (as defined) should be allocated to AMVER-derived (or COADS-derived) vessel traffic profiles. In any case, a methodology to conduct and present analysis of uncertainty in geographic representation using proxy data sets is needed. Recent studies have suggested this need in other geographically resolved global inventories [*Olivier et al.*, 1999].

[46] Our results also suggest that recent research to account for in-plume decay and post-exhaust chemistry in models will need to continue to evaluate the potential impact from ship emissions. A number of studies have attempted to reconcile the apparent discrepancies between predicted pollution concentrations using large-scale chemical transport models and field observations [*Corbett et al.*, 2002; *Davis et al.*, 2001; *Ferek et al.*, 1998; *Kasibhatla et al.*, 2000; *Russell et al.*, 1999]. If our larger inventory of ship emissions is more accurate, then why do model predictions using smaller inventory estimates over predict observations of ambient pollutant concentrations? This research area may be more important in light of these results.

[47] Finally, we suggest several policy implications. Ship emissions are larger than previously considered, and therefore continue to merit policy attention. Oceangoing ships produce about twice as much NO_x as previously estimated, and a significant fraction of these emissions may fall under domestic accounting (if not jurisdiction). Moreover, given that nearshore emissions from ships may be much larger than depicted in global inventories, regional and local policy jurisdictions may have additional reasons to consider stronger action than the global standard set by the International Maritime Organization (IMO). International treaty and domestic regulatory development will need to consider environmental implications of both domestically assigned and internationally assigned energy use by ships. This will make policy efforts both more important and more complicated.

References

Adcock, L. E., and G. A. Stitt, AMI International's naval main propulsion market overview, report, AMI Int., Bremerton, Wash., 1995.

ARCADIS Geraghty & Miller, Inc., Commercial marine activity for deep sea ports in the United States: Final report, *EPA420-R-99-020*, 214 pp., Assess. and Model. Div., Off. of Mobile Sources, U.S. Environ. Prot. Agency, Ann Arbor, Mich., 1999a.

ARCADIS Geraghty & Miller, Inc., Commercial marine activity for Great Lake and inland river ports in the United States: Final report, *EPA420-R-99-019*84 pp., Assess. and Model. Div., Off. of Mobile Sources, U.S. Environ. Prot. Agency, Ann Arbor, Mich., 1999b.

Benkovitz, C. M., M. T. Scholtz, J. Pacyna, L. Tarrason, J. Dignon, E. C. Voldner, P. A. Spiro, J. A. Logan, and T. E. Graedel, Global gridded inventories of anthropogenic emissions of sulfur and nitrogen, *J. Geophys. Res.*, *101*(D22), 29,239–29,253, 1996.

Benkovitz, C. M., H. Akimoto, J. J. Corbett, J. D. Mobley, J. Olivier, J. V. Aardenne, and V. Vestreng, Compilation of regional to global inventories of anthropogenic emissions, in *Emissions of Atmospheric Trace Compounds*, edited by C. Reeves, Kluwer Acad., Norwell, Mass., in press, 2003.

Booz Allen & Hamilton, Inc., Commercial marine vessel contributions to emission inventories, draft final report, Los Angeles, Calif., 1991.

Bouwman, A. F., K. W. Van der Hoek, and J. G. J. Olivier, Uncertainties in the global source distribution of nitrous oxide, *J. Geophys. Res.*, *100*(D2), 2785–2800, 1995.

Capaldo, K. P., J. J. Corbett, P. Kasibhatla, P. Fischbeck, and S. N. Pandis, Effects of ship emissions on sulphur cycling and radiative climate forcing over the ocean, *Nature*, *400*, 743–746, 1999.

Carlton, J. S., A. A. Wright, and R. J. Coker, Marine exhaust emissions-A regional survey of the English Channel, report, Mar. Manage. (Holdings) Ltd., London, 1994.

Carlton, J. S., S. D. Danton, R. W. Gawen, K. A. Lavender, N. M. Mathieson, A. G. Newell, G. L. Reynolds, A. D. Webster, C. M. R. Wills, and A. A. Wright, Marine Exhaust Emissions Research Programme, report, Lloyd's Regist. Eng. Serv., London, 1995.

Corbett, J. J., Emissions from ships in the northwestern United States, *Environ. Sci. Technol.*, *36*(6), 1299–1306, 2002.

Corbett, J. J., and P. S. Fischbeck, Emissions from ships, *Science*, *278*(5339), 823–824, 1997.

Corbett, J. J., and P. S. Fischbeck, Emissions from waterborne commerce in United States continental and inland waters, *Environ. Sci. Technol.*, *34*(15), 3254–3260, 2000.

Corbett, J. J., P. S. Fischbeck, and S. N. Pandis, Global nitrogen and sulfur emissions inventories for oceangoing ships, *J. Geophys. Res.*, *104*(D3), 3457–3470, 1999.

Corbett, J. J., et al., Measurements of marine vessel emissions and resulting plume chemistry off of the California coast during ITCT, *Eos Tran. AGU*, *83*(47), Fall Meet. Suppl., Abstract A62B-0160, 2002.

Davis, D. D., G. Grodzinsky, P. Kasibhatla, J. Crawford, G. Chen, S. Liu, A. Bandy, D. Thornton, H. Guan, and S. Sandholm, Impact of ship emissions on marine boundary layer NO_x and SO_2 distributions over the Pacific Basin, *Geophys. Res. Lett.*, *28*(2), 235–238, 2001.

Endresen, Ø., E. Sørgård, J. K. Sundet, S. B. Dalsøren, I. S. A. Isaksen, T. F. Berglen, and G. Gravir, Emission from international sea transportation and environmental impact, *J. Geophys. Res.*, *108*(D17), 4560, doi:10.1029/2002JD002898, 2003.

Energy and Environmental Analysis, Inc., and Sierra Research, Analysis of commercial marine vessels emissions and fuel consumption data, *EPA420-R-00-002*, 158 pp., Off. of Transport. and Air Qual., U.S. Environ. Prot. Agency, Ann Arbor, Mich., 2000.

Energy Information Administration, State energy data report 1997: Consumption estimates, *DOE/EIA-0214 (97)*, 525 pp., Washington, D. C., 1999.

Environmental Protection Agency, 40 CFR Parts 9, 86, and 89: Control of emissions of air pollution from nonroad diesel engines: Final rule, *Fed. Regist.*, *63*(205), 56,967–57,023, 1998a.

Environmental Protection Agency, 40 CFR Parts 85, 89 and 92: Emission standards for locomotives and locomotive engines: Final rule, *Fed. Regist.*, *63*(73), 18,977–19,084, 1998b.

Environmental Protection Agency, 40 CFR Parts 89, 92, and 94: Control of emissions of air pollution from new CI marine engines at or above 37 kW: Final rule, *Fed. Regist.*, *64*(249), 73,299–73,373, 1999.

Environmental Protection Agency, 40 CFR Part 94: Control of emissions of air pollution from new marine compression-ignition engines at or above 30 liters/cylinder: Proposed rule, *Fed. Regist.*, *68*(9746), 37,548–37,608, 2002a.

Environmental Protection Agency, 40 CFR Parts 89, 90, 91, 94, 1048, 1051, 1065, and 1068: Control of emissions from nonroad large spark-ignition engines, and recreational engines (marine and land-based): Final rule, *Fed. Regist.*, *67*(217), 68,242–68,291, 2002b.

Environmental Protection Agency, 40 CFR Parts 9 and 94: Control of emissions from new marine compression-ignition engines at or above 30 liters per cylinder: Final rule, *Fed. Regist.*, *68*(40), 9745–9789, 2003.

European Commission, A European Union strategy to reduce atmospheric emissions from seagoing ships: Communication from the commission to the European Parliament and the council, report, Brussels, 2002a.

European Commission, Proposal for a directive of the European Parliament and of the council amending Directive 1999/32/EC as regards the sulphur content of marine fuels, report, Brussels, 2002b.

European Commission and ENTEC UK Limited, Quantification of emissions from ships associated with ship movements between ports in the European Community, *DG ENV.C1*, Eur. Comm., Brussels, 2002.

Ferek, R. J., D. A. Hegg, P. V. Hobbs, P. Durkee, and K. Nielsen, Measurements of ship-induced tracks in clouds off the Washington coast, *J. Geophys. Res.*, *103*(D18), 23,199–23,206, 1998.

Graedel, T. E., et al., A compilation of inventories of emissions to the atmosphere, *Global Biogeochem. Cycles*, *7*, 1–26, 1993.

Houghton, J., L. M. Filho, K. T. B. Lim, I. Mamaty, Y. Bonduki, D. Griggs, and B. Callender, Revised 1996 IPCC guidelines for national greenhouse gas inventories, edited by IPCC/OECD/IEA, report, IPCC WGI Tech. Supp. Unit, Bracknell, U.K., 1997.

International Energy Agency, *Energy Statistics 1970–1985 and Main Series from 1960*, 513 pp., Org. for Econ. Coop. and Dev., Paris, 1987.

International Maritime Organization, *Annex VI of MARPOL 73/78 and NO_xTechnical Code*, 150 pp., Int. Mar. Org., London, 1998.

International Maritime Organization and Marine Environment Protection Committee, Prevention of air pollution from ships-Sulfur monitoring 2000, report, London, 2001.

International Organization for Standardization (ISO), International standard, petroleum products–Fuels (class F)–Classification–Part 1: Categories of marine fuels, report, Geneva, 1986.

International Organization for Standardization (ISO), International standard, petroleum products–Fuels (class F)–Specifications of marine fuels, report, Geneva, 1987.

International Organization for Standardization (ISO), Reciprocating internal combustion engines–Exhaust emission measurement–Part 4: Test cycles for different engine applications, report, Geneva, 1996.

Kasibhatla, P., et al., Do emissions from ships have a significant impact on concentrations of nitrogen oxides in the marine boundary layer?, *Geophys. Res. Lett.*, *27*(15), 2229–2233, 2000.

Kean, A. J., R. F. Sawyer, and R. A. Harley, A fuel-based assessment of off-road diesel engine emissions, *J. Air Waste Manage. Assoc.*, *50*(11), 1929–1939, 2000.

Kesgin, U., and N. Vardar, A study on exhaust gas emissions from ships in Turkish Straits, *Atmos. Environ.*, *35*(10), 1863–1870, 2001.

Koehler, H. W., How much NO_x do ships actually emit?, paper presented at The Maritime Environment: Thermal Waste Treatment and Prevention of Air Pollution From Ships, Eule and Partners Mar. Conf., Luebeck-Stockelsdorf, Germany, 2002a.

Koehler, H. W., Worldwide NO_x emissions from merchant shipping, paper presented at 24th Annual Marine Propulsion Conference, Motor Ship: The Mar. Technol. Mag., Copenhagen, Denmark, 2002b.

Koehler, H. W., NO_x emissions from oceangoing ships: Calculation and evaluation, paper presented at 2003 Spring Technical Conference, Am. Soc. of Mech. Eng. Int. Div., Salzburg, Austria, 2003.

Lawrence, M., and P. Crutzen, Influence of NO_x emissions from ships on tropospheric photochemistry and climate, *Nature*, *402*(6758), 167–170, 1999.

Lim, B., P. Boileau, Y. Bonduki, A. R. van Amstel, L. H. J. M. Janssen, J. G. J. Olivier, and C. Kroeze, Improving the quality of national greenhouse gas inventories, *Environ. Sci. Policy*, *2*(3), 335–346, 1999.

Lloyd's Maritime Information System (LMIS), The Lloyd's Maritime Database [CD-ROM], Lloyd's Register–Fairplay Ltd., London, 2002.

Lloyd's Register, Marine Exhaust Emissions Research Programme: Transient emissions and air quality impact evaluation, report, Lloyd's Reg. of Shipping, London, 1993.

Markle, S. P., and A. J. Brown, Naval ship engine exhaust emission characterization, *Nav. Eng. J.*, *108*(5), 37–47, 1996.

Marland, G., A. Brenkert, and J. Olivier, CO_2 from fossil fuel burning: A comparison of ORNL and EDGAR estimates of national emissions, *Environ. Sci. Policy*, *2*(3), 265–273, 1999.

Morgan, G. M., and M. Henrion, *Uncertainty: A Guide to Dealing with Uncertainty in Quantitative Risk and Policy Analysis*, 332 pp., Cambridge Univ. Press, New York, 1990.

Naval Sea Systems Command (NAVSEA), Internal Combustion (Gas Turbine and Diesel) Engine Exhaust Emission Study, Westinghouse Mach. Technol. Div., Pittsburgh, Penn., 1992.

Naval Sea Systems Command (NAVSEA), U.S. Navy marine diesel engine and gas turbine exhaust emissions, report, Washington, D. C., 1994.

Olivier, J. G. J., and J. J. M. Berdowski, Global emissions sources and sinks, in *The Climate System*, edited by J. Berdowski, R. Guicherit, and B. J. Heij, pp. 33–78, A.A. Balkema, Brookfield, Vt., 2001.

Olivier, J. G. J., and J. A. H. W. Peters, International marine and aviation bunker fuel: Trends, ranking of countries and comparison with national CO_2 emissions, Rijksinst. voor Volksgezondheid and Milieu, Bilthoven, 1999.

Olivier, J. G. J., A. F. Bouwman, C. W. M. Van der Maas, J. J. M. Berdowski, C. Veldt, J. P. J. Bloos, A. J. H. Visschedijk, P. Y. J. Zandveld, and J. L. Haverlag, Environmental Data for Global Atmospheric Research (EDGAR), report, Rijksinst. voor Volksgezondheid and Milieu, Bilthoven, Netherlands, 1996.

Olivier, J. G. J., A. F. Bouwman, J. J. M. Berdowski, C. Veldt, J. P. J. Bloos, A. J. H. Visschedijk, C. W. M. van der Maas, and P. Y. J. Zandveld, Sectoral emission inventories of greenhouse gases for 1990 on a per country basis as well as on $1° \times 1°$, *Environ. Sci. Policy*, *2*(3), 241–263, 1999.

Russell, L., et al., Aerosol dynamics in ship tracks, *J. Geophys. Res.*, *104*(D24), 31,077–31,095, 1999.

Singer, B. C., and R. A. Harley, A fuel-based motor vehicle emission inventory, *J. Air Waste Manage. Assoc.*, *46*(6), 581–593, 1996.

Skjølsvik, K. O., A. B. Andersen, J. J. Corbett, and J. M. Skjelvik, Study of greenhouse gas emissions from ships (report to International Maritime Organization on the outcome of the IMO Study on Greenhouse Gas Emissions from Ships), *MEPC 45/8*, MARINTEK Sintef Group/Carnegie Mellon Univ., Center for Economic Analysis/Det Norske Veritas, Trondheim, Norway, 2000.

Streets, D. G., G. R. Carmichael, and R. L. Arndt, Sulfur dioxide emissions and sulfur deposition from international shipping in Asian waters, *Atmos. Environ.*, *31*(10), 1573–1582, 1997.

Streets, D. G., S. K. Guttikunda, and G. R. Carmichael, The growing contribution of sulfur emissions from ships in Asian waters 1988–1995, *Atmos. Environ.*, *34*(26), 4425–4439, 2000.

U.S. Army Corps of Engineers, NDC publications and U.S. waterway data CD [CD-ROM], Water Resour. Support Cent., Nav. Data Cent., Alexandria, Va., 2001.

van Amstel, A., J. Olivier, and L. Janssen, Analysis of differences between national inventories and an emissions database for global atmospheric research (EDGAR), *Environ. Sci. Policy*, *2*(3), 275–293, 1999.

J. J. Corbet, Marine Policy, College of Marine Studies, University of Delaware, 118 Robinson Hall, Newark, DE 19710, USA. (jcorbett@udel.edu)

H. W. Koehler, Technical Promotion, MAN B&W Diesel AG, Stadtbachstr. 1, D-86224 Augsburg, Germany. (horst_koehler@manbw.de)

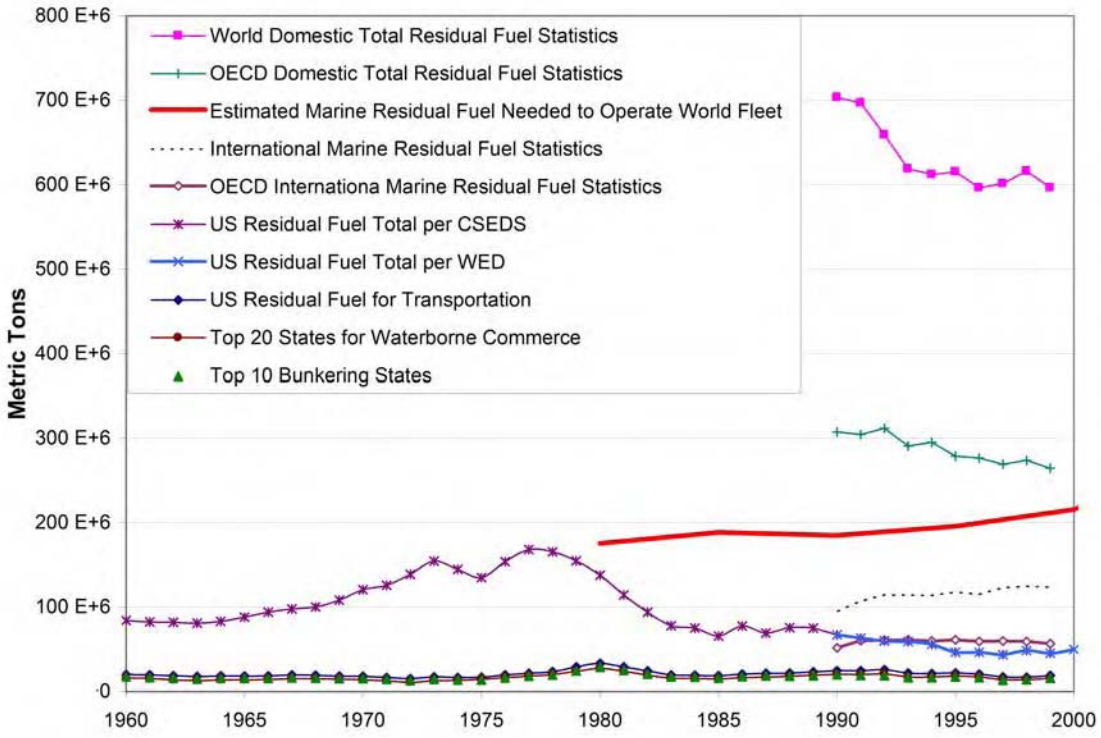

Figure 9. Comparison of world consumption of domestic residual fuel and international bunkers for 1990–1999. (Estimated marine fuel use curve represents this work.) Also shown are United States domestic residual fuel statistics since 1960, including residual fuel for transportation. Nearly 100% of residual fuel used in transportation is used by oceangoing marine vessels; nearly all inland vessels, harbor craft, and small commercial workboats use diesel fuel.

[Taken from Colorado State University Course on Marine Vessel Emissions: see http://vista.cira.colostate.edu/docs/WRAP/Emissions/OffshoreEmissions.doc]

Introduction

Commercial marine emissions comprise a wide variety of vessel types and uses. Table 1 describes the different types of commercial marine vessel activity. In the previous WRAP mobile sources emission inventory work, emissions were estimated for most types of vessels (Pollack et al., 2004). Military emissions were not estimated because the activity data are not publicly available, and offshore emissions were not considered at that time.

Table 1. Commercial vessel types.

Source Definition	Purpose	Geographic Area
Deep draft	Ocean-going large vessels	Ocean Traffic
		Near port
Tow or Push Boats	Barge Freight	River Traffic
		Ocean Traffic
Tugs	Vessel assist and support functions	Near port
Ferries	River or lake ferrying	Regular routes
Other Commercial Vessels	Smaller support or excursion boats	Near dock
Dredges	Dredging projects	Varies
Commercial Fishing	Market fishing	Ocean
Military	Coast Guard and Navy	Ocean & Port

Emissions were estimated for deep draft vessels within shore and near port using port call data, and offshore emissions generated from ship location data. The most important revision for commercial marine emissions leading to regional haze (PM, SOx, and NOx) was the estimation of emissions for the offshore activity, primarily of ocean-going vessels. This activity was not previously estimated for the WRAP emission inventory, and has been a subject of concern as vessel traffic passes out from and along and upwind of the western coast of the US. The other revision conducted here was to update in-shore deep-draft vessel emissions to reflect changing fleet mix, especially the retirement of steamship powered vessels.

One issue for modelers was which vertical grid layer to introduce the deep draft emissions. The stack height of 34 to 58 meters (Starcrest, 2004) and plume rise for ocean-going (deep draft) vessels indicated that the emissions should be placed in the second vertical layer (above 36 and below 73 meters). The plume rise was estimated at 2 meters using standard plume rise models with the vessel speed of 17 to 25 knots as the wind speed, exhaust exit rate of 35 to 40 meters per second with an average stack diameter of about 1.3 meters (Anderson, 2000).

Off-Shore Emissions Estimation Methodology

The method used to estimate the offshore marine emissions uses location identification data from a sample of vessels within the region of interest, and scaling factors by vessel type to estimate all ships. The ship proximity data and methods used to develop the ship population and emissions offshore are described in Pollack, et al., 2006. In short, this method uses positioning data generated by a subset of the world's ships, assumes the sample is a random sample, and scales that sample to the entire world fleet.

Emissions estimates using this method were compared with the emissions generated using the Puget Sound port activity estimates described below. The grid cell emission totals at the entrance/exit of the Strait of Juan de Fuca using the scaled proximity method were approximately half of what were predicted using just the US port traffic, ignoring the traffic to and from Vancouver, Canada. Using the proximity method it would be expected that the emissions would be underestimated as ships near land, because positioning systems would be turned off or, if manually operated, would not be actively engaged during this period of time. This would reduce the number of ship indicators in areas near land and underestimate the ship traffic. Therefore, emissions in the first whole grid cell and any partial grid cells near the coast were zeroed out and replaced with emission estimates derived from the in-port activity for Oregon and Washington ports (Puget Sound, Columbia River, Coos Bay, and Grays Harbor) with remaining near coast estimates unchanged, as shown in Figure 1. The most apparent difference can be observed in Figure 1 for the grid cells near the mouth of the Columbia River where the nearest four grid cells now have higher emissions. There are also higher emissions at the entrance to the Strait of Juan de Fuca, but that result is less clear in Figure 1.

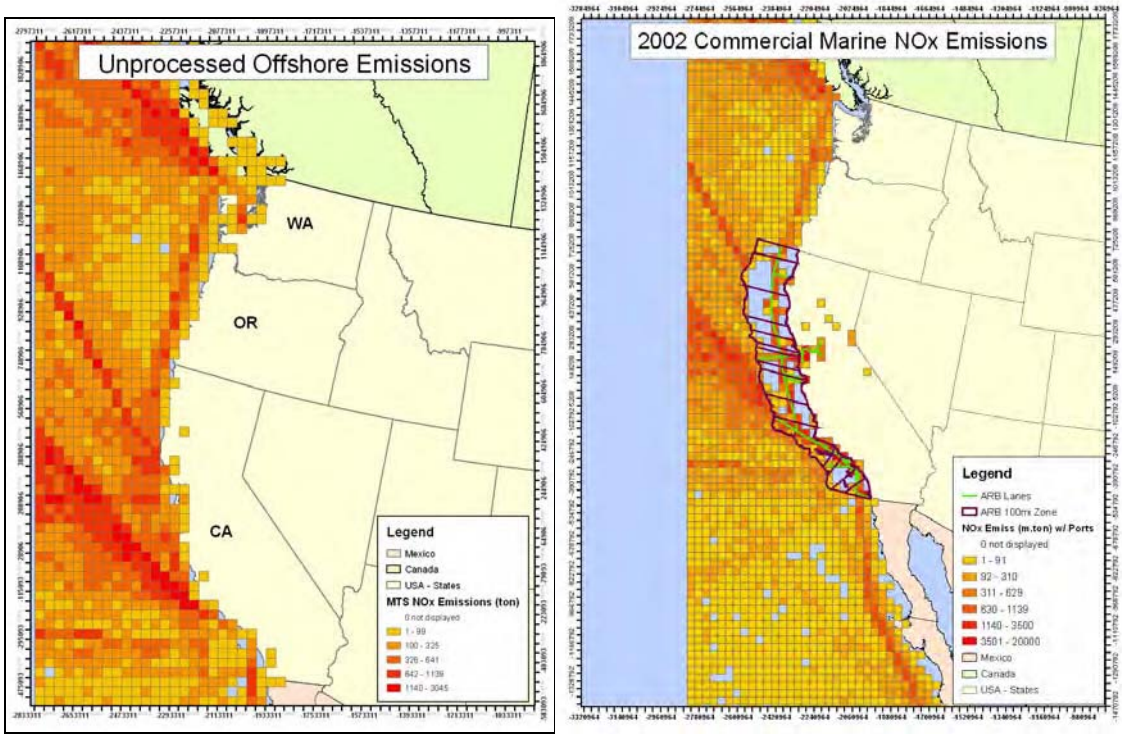

Figure 1. Raw offshore emission estimates and with near port emissions substituted (Blue grids indicate no emissions over water).

The commercial marine vessel emission inventory estimates provided by the California Air Resources Board (CARB) includes estimates for ships in transit within 100 miles of the coast (CARB, 2005). The transit emissions predicted using the proximity method in this work were zeroed out for the zone where CARB estimates were applicable. They were replaced by the CARB transit emissions estimates that were spatially assigned to the coastal shipping lanes defined by CARB. The result of this replacement along the California coast is apparent in the right side of Figure 1. The CARB data also included large vessel activity in ports. Therefore, in addition to using the CARB transit emissions for the California coastal zone, the CARB in port emissions were used for the California ports.

Because the emissions offshore represent entirely new estimates of emissions in the WRAP modeling domain, a summary of emissions is shown in Table 2 by state compared with the emissions near the ports and for California within the coastal zone. For purposes of preparing state emissions totals for offshore activity, the states were defined using the latitudes where the state borders meet the shore, as shown in Figure 2. For the near port totals in Table 2, it should be noted that the Columbia River vessel traffic (especially the transit up and down the river) was primarily allocated to the State of Washington counties.

Table 2. 2002 Large ocean-going ship emissions by location (tons/year).

State	VOC	CO	NOx	PM10	SO2
Washington (offshore)	1,451	2,941	44,692	3,247	25,130
Washington (near port)	103	209	3,467	335	2,483
Washington (within shore)	277	1,206	10,764	763	5,352
Oregon (offshore)	1,331	2,706	41,113	2,986	23,119
Oregon (near port)	22	44	736	72	532
Oregon (within shore)	23	271	1,415	42	212
California (offshore)	4,269	8,681	131,930	9,587	74,181
California (coastal zone)	5,387	14,345	111,550	6,042	46,059
Total	**12,863**	**30,403**	**345,667**	**23,074**	**177,068**

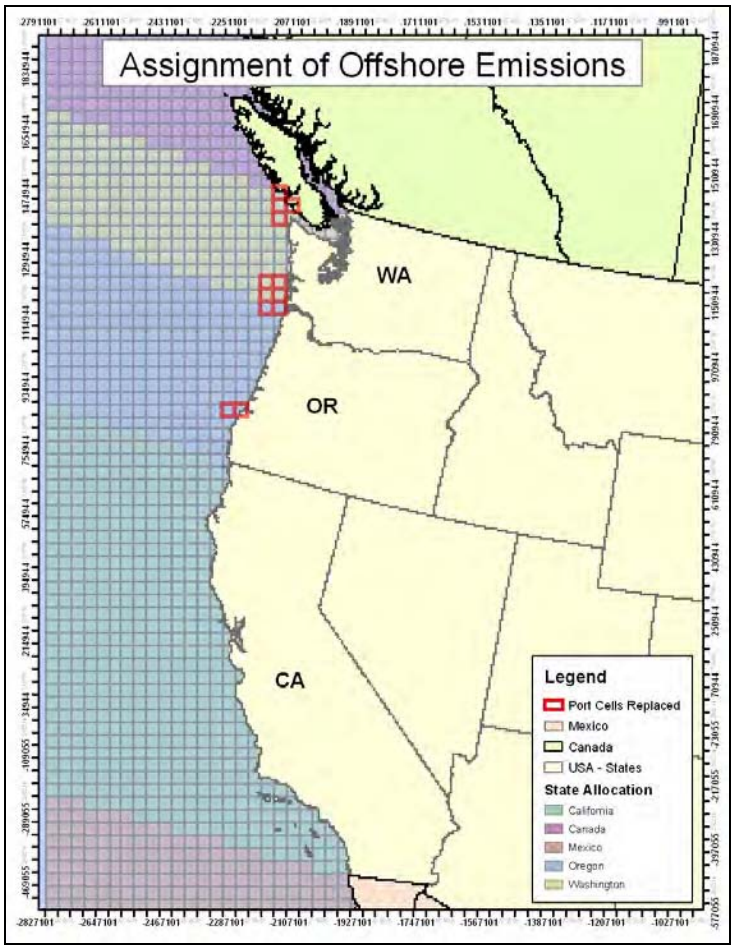

Figure 2. Offshore emissions by state and grid cells replaced with near port data.

In-shore Port Revisions

Ocean-going vessel emissions near ports were revised from the previous WRAP estimates (Pollack et al., 2004) to account for fleet turnover and more recent emission rate estimates. The fleet turnover aspect of the work considered the entire replacement of steamships with motorships, especially for projecting future year estimates.

<u>Emission Factors Revisions</u>

Table 3 shows the emission factors estimated by the U.S. EPA for Category 2 and 3 engines (EPA, 1999a, 2003) used in previous WRAP emission inventory estimates. For the Category 2 engines, the average values shown in Table 3 were the average values used to estimate the emission reductions from the new emission standards (Samulski, 1999), and are quite similar to the emission factors for the highest power Category 1 engines. For Category 3 engines, EPA relied on a review of the base emission factors by ENVIRON (2002), based on the available data to date when the study was conducted.

Table 3. US EPA (1999a, 2003) baseline emission factors for marine engines.

Engine Category	HC [g/kW-hr]	CO [g/kW-hr]	NO_X [g/kW-hr]	PM [g/kW-hr]
Category 2 (5-30 l/cylinder)	0.134	2.48	13.36	0.32 low sulfur
Category 3 Medium Speed (> 300 rpm, > 30 l/cylinder)	0.5*	0.7	16.6	Fuel sulfur dependence
Category 3 Slow speed	0.5*	1.1	23.6	Fuel sulfur dependence

* Converted from kg/tonne units in Lloyds (1995) using 210 (g/kW-hr) for "medium speed" engines.

Since the previous WRAP work, additional studies related to marine engine emissions have been published, including Cooper (2001 and 2003) and ENTEC (2002). Emission estimates from these studies were cited in the Port of Los Angeles (PoLA) emission inventory report (Starcrest, 2004). Table 4 summarizes emission factors from these studies.

Table 4. Emission factors for marine engines in the Port of Los Angeles emission inventory report.

Engine Category	HC [g/kW-hr]	CO [g/kW-hr]	NO_X [g/kW-hr]	PM [g/kW-hr]
Main Engine (Medium Speed – Residual Oil)	0.5	1.1	14.0	0.72
Main Engine (Slow Speed – Residual Oil)	0.6	1.4	18.1	1.92
Auxiliary Engine (Medium Speed – Residual Oil)	0.4	1.1	14.7	0.30
Auxiliary Engine (Medium Speed – Gas Oil)	0.4	1.1	13.9	0.30

The author of the 2002 ENTEC study later published a report to supplement the emission data compiled in the ENTEC study for marine engines (IVL, 2004). The emission data used in the IVL 2004 study are summarized in Table 5 for engines built prior to the MARPOL NOx emission reduction requirement. Note the dramatic difference in the slow speed particulate emission rate estimates of 1.92 or 1.3 g/kW-hr.

Table 5. Emission factors found in the IVL 2004 report for average 1999 conditions.

Engine Category	BSFC [g/kW-hr]	HC [g/kW-hr]	CO [g/kW-hr]	NO_X [g/kW-hr]	PM [g/kW-hr]
Medium Speed – Residual Oil (2.4% sulfur)	215	0.2	1.1	14.0	0.5
Medium Speed – Gas Oil (0.4% sulfur)	205	0.2	1.1	13.2	0.2
Slow Speed – Residual Oil (2.4% sulfur)	195	0.3	0.5	18.1	1.3
Slow Speed – Gas Oil (0.4% sulfur)	185	0.3	0.5	17.0	0.2

There remains considerable uncertainty about the particulate emissions rates, especially for engines using high sulfur fuels. The IVL (2004) and ENTEC (2002) estimates indicate that the authors consider the uncertainty in the PM10 emission rates to be in excess of 50%. This may stem from the method of collection, filter handling, or other factors associated with the hygroscopic nature of the particulate formed from diesel engines burning high sulfur fuels. The particulate emissions rates and sulfur relationship used for the current WRAP inventories are not intended to be the final word on the subject, but provide a reasonable range of estimates consistent with the best understanding at this time.

Revised Estimates for Ocean-Going Vessels

EPA (1999b) reviewed estimates of the ocean-going vessel activity for Coos Bay and Puget Sound ports. In this document, a method is also described to extrapolate ocean-going vessel activity for other ports and to allocate activity to individual Puget Sound ports. Two data sources existed for the EPA (1999b) report, one of which gathered general information about the total number of trips by vessel type for the top 95 US ports, and the other gathered more specific information for several ports including the Puget Sound ports totals and Coos Bay. The more general information was used to allocate the more specific activity information to each of the Puget Sound ports and to extrapolate an estimate of the activity of the Columbia River ports. This method was identical to previous WRAP emission inventories with the replacement of steamships with motorships of the same gross tonnage. The revised emission estimates are shown in Table 6 for Puget Sound ports to be used to cross reference to the Columbia River ports. Emission rates for motorships are higher for NOx but lower for PM and SOx than for steamships.

Table 6. Emission estimates for Puget Sound (excluding Grays Harbor) ocean-going vessels in 2002.

Estimate	HC (tons/year)	CO (tons/year)	NOx (tons/year)	PM (tons/year)	SO2 (tons/year)
Cruise (25 miles to entrance of the Strait)	52	106	1,759	170	1,400
Reduced Speed Zone	135	275	4,554	440	3,255
Maneuvering	23	67	203	24	164
Hotelling	28	523	2,814	68	302
Total	**238**	**971**	**9,329**	**701**	**5,121**

The emissions estimated in Table 6 do not include Canadian vessel traffic, and so may underestimate the emissions within and just outside the Strait of Juan de Fuca. A Canadian study (Levelton, 2002) added in Canadian traffic, which significantly increased (by 1.5 to 4 times) the reduced speed zone and cruise mode emissions for Washington State emissions exclusively in the transit modes through the Strait of Juan de Fuca. The scope of the inventory does not include the Canadian traffic emissions, but it should be understood that this emission source affects Washington marine emissions.

For geographic allocation, the emissions for each port were separated into three segments: cruise, reduced speed zone (RSZ), maneuvering and hotelling/dwelling. For emissions associated with Grays Harbor vessel calls, all emissions were considered to occur in Grays Harbor County. For all Puget Sound vessel calls, the cruise condition emissions were assumed to occur in Clallum County. For all Puget Sound vessel calls, the maneuvering and hotelling emissions were allocated to the county of the port of interest. The emissions for the reduced speed zone were allocated to the counties along the primary shipping channel according to estimates of the fraction of time spent in each county. For example, port calls to Olympia included RSZ emissions in Clallum, Jefferson, Kitsap, Pierce, and Thurston counties; and Port calls to Bellingham included transit through Clallum, San Juan, and Whatcom counties. Because shipping lanes often straddle county boundaries, these county designations were made for expedience and could be improved by plotting emissions along the actual shipping lanes rather than the county in general.

The basic data for the vessel calls and emission estimates were for 1996, the same as the previous emission inventory, but the scaling (growth) estimates from 1996 to 2002 were updated with freight movement information for 2002 compared to 1996. These scaling factors are shown in Table 7 for each port.

Table 7. Freight tonnage from 1996 to 2002 by port.

Port	1996	2002	2002/1996
Seattle Harbor, WA	23,547,000	19,591,009	0.83
Tacoma Harbor, WA	21,491,000	20,587,109	0.96
Anacortes Harbor, WA	13,844,000	15,362,650	1.11
Everett Harbor, WA	4,007,000	3,009,175	0.75
Port Angeles Harbor, WA	2,780,000	1,673,985	0.60
Grays Harbor, WA	1,990,000	1,485,991	0.75
Bellingham Harbor, WA	1,419,000	250,000	0.18
Olympia Harbor, WA	1,893,000	1,440,439	0.76
Puget Sound Totals	**68,981,000**	**61,914,367**	**0.90**
Port of Astoria, OR	324,000	95,000	0.29
Port of Kalama, WA	8,223,000	6,386,161	0.78
Port of Longview, WA	5,163,000	4,705,771	0.91
Port of Portland, OR	29,734,000	26,635,044	0.90
Port of Vancouver, WA	7,704,000	6,610,345	0.86
Columbia River Totals	**51,148,000**	**44,432,321**	**0.87**
Coos Bay	3,322,000	1,706,821	0.51
Valdez, AK	77,116,000	50,513,074	0.66
Ketchikan, AK	1,341,000	753,000	0.56
Nikiski, AK	6,608,630	7,235,098	1.09
Anchorage, AK	3,401,000	2,983,137	0.88

Columbia River Ports

The Columbia River ports were estimated according to the procedure described in EPA (1999b), where a scaling factor was determined with a similar port, in this case, the Puget Sound totals. Adjustments were made to the actual vessel activity such as reduced speed zone load and time in mode based on discussions with the River Pilots for the Columbia River ports. Other factors, such as cruise, maneuvering, and hotelling time and load, were kept the same with the adjusted number of vessel calls.

Vessels arriving near the mouth of the Columbia River are guided by Bar pilots across the Columbia Bar to Astoria (approximately 14 nautical miles), where River pilots begin piloting ships to their destination. The River pilots estimate that 12 knots is a typical average speed for ships once the pilots take command.

There were five major ports in the Columbia River for which EPA (1999b) identified and estimated total vessel visits. These total vessel visits were compared with the total activity for Puget Sound ports (including Grays Harbor) for which a more detailed estimate has already been produced, as shown in the Table 8. The port call information provided here does not necessarily match the actual deep draft vessel calls because often smaller ships are included in the Army Corps estimates than would be included in a port specific data of deep draft vessels. The individual vessel visits by type of vessel for each Columbia River port were divided by the Puget Sound totals and multiplied by the more detailed estimate of the Puget Sound ports totals to produce an estimate of vessel activity for each of the Columbia River ports.

Table 8. Port activity totals as presented by EPA (1999b) for 1995.

Activity Data	Puget Sound Ports	Port of Portland, OR	Port of Kalama, WA	Port of Vancouver, WA	Port of Longview, WA	Port of Astoria, OR
RSZ Mileage (Nautical)	--	93	69	94	59	14
Bulk Carrier	**1378**	**694**	**378**	**446**	**543**	**397**
Container Ship	**2667**	**540**	**0**	**7**	**0**	**0**
General Cargo	**428**	**69**	**1**	**111**	**44**	**5**
Other	**82**	**0**	**0**	**0**	**0**	**1**
Passenger	101	792	0	20	5	9
Reefer	108	10	0	0	13	0
Roll on/Roll off	795	126	0	7	15	4
Tanker	1000	299	20	28	9	0
Vehicle Carrier	1069	247	0	13	0	0

By using the ratio of total visits, the emissions for the Columbia River ports were directly calculated from the Puget Sound totals for cruise, maneuvering, and hotelling emissions. The resulting emissions adjusted to eliminate steamships for 1996 activity are shown in Table 9; Table 10 shows the emissions projected to 2002. Cruise conditions are assumed here to begin 14 miles out from Astoria where the reduce speed zone ends. Reduced speed zone emissions used the ratio of total visits and the ratios of load and time in mode for each Columbia River port. For instance, the reduced speed zone in the Puget Sound

ranges from the entrance of the Strait of Juan de Fuca to near each port while the reduced speed zone for the Columbia River ports ranges from 14 miles out and in the Columbia River. Both the vessel speed (which affects the engine load) and the time in mode are different between the Puget Sound and Columbia River.

Table 9. Emission estimates for Columbia River ocean-going vessels in 1996.

Estimate	HC (tons/year)	CO (tons/year)	NOx (tons/year)	PM (tons/year)	SO2 (tons/year)
Port of Astoria, OR	6	69	395	14	76
Port of Kalama, WA	11	78	555	30	198
Port of Longview, WA	15	114	789	41	264
Port of Portland, OR	62	330	2662	174	1196
Port of Vancouver, WA	20	118	914	56	377

Table 10. Emission estimates for Columbia River ocean-going vessels in 2002.

Estimate	HC (tons/year)	CO (tons/year)	NOx (tons/year)	PM (tons/year)	SO2 (tons/year)
Port of Astoria, OR	3	22	146	7	44
Port of Kalama, WA	11	65	512	31	212
Port of Longview, WA	18	113	862	51	344
Port of Portland, OR	72	328	2935	209	1470
Port of Vancouver, WA	21	109	920	61	423

Overall emissions for vessels visiting each port are shown in Table 10 for 2002. However, transit emissions occur in the Columbia River downstream of each port rather than in the port area. The geographic allocation for the transit (cruise and RSZ) emissions were to the Washington counties (Pacific for cruise and some RSZ, Wahkiakum, Cowlitz, or Clark) below each port according to the fraction of time spent in each county. Maneuvering and hotelling emissions were allocated to the county of the port, whether Washington or Oregon.

The port of Coos Bay was determined differently in that no steamships called at this port in 1996. Therefore, no adjustment to the vessel fleet was made for this work other than using the revised NOx emission factors described here.

California Coastal Transit and Ports

Emissions for commercial marine vessels operating near and within the State of California were provided by CARB (CARB, 2005). Emissions were provided for several major categories, labeled by ARB as SHIPS IN-TRANSIT, SHIPS MANEUVERING and SHIPS BERTHING. The IN-TRANSIT category was defined as corresponding to operations on shipping lanes within 100 miles of the California coast. The MANUEVERING and BERTHING categories correspond to operations at ports. Emissions were also provided for a category labeled COMMERCIAL BOATS that accounts for the activity of smaller vessels near ports and on interior waterways. To incorporate the data provided by CARB into the WRAP commercial marine inventory,

the CARB county level emissions estimates were spatially allocated to the 36 kilometer grid.

One of two methods was used to spatially allocate the California marine vessel emissions, depending on the emission category. For the IN-TRANSIT emissions, CARB provided a shapefile that defined the 100 mile coastal zone and a shapefile that defined the shipping lanes within that zone. By overlaying the 100 mile zone for each county with the shipping lanes and the WRAP grid, it was possible to assign a fraction of the county total emissions to each grid cell. For the remaining emissions categories, the emissions were assigned to the grid cells that encompassed the major port in the county. The exception to such port assignments were inland counties where emissions were assigned to major lakes or rivers. Figure 3 shows the grid cells to which IN-TRANSIT and the port/inshore emissions were assigned by these procedures.

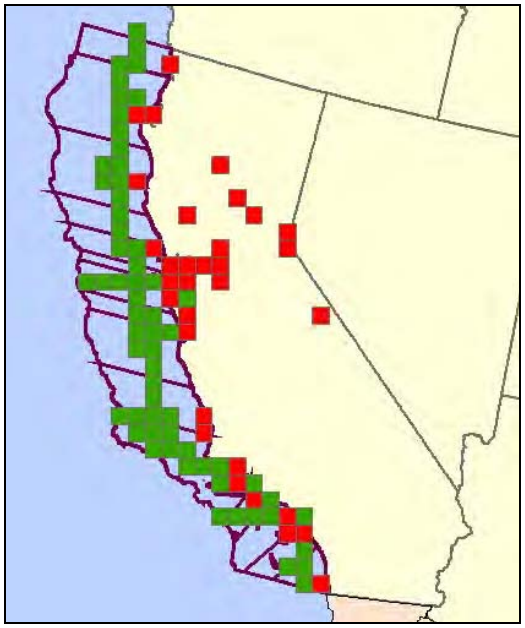

Figure 3. Grid assignment of California in-transit (green) and port/inshore (red) emissions.

The grid cell assigned emissions were then added to the other WRAP offshore and near port gridded emissions. Any overlap of the two inventories was eliminated. This yielded a comprehensive emission inventory for commercial marine operations on the west coast that encompasses all the zones shown in Figure 4.

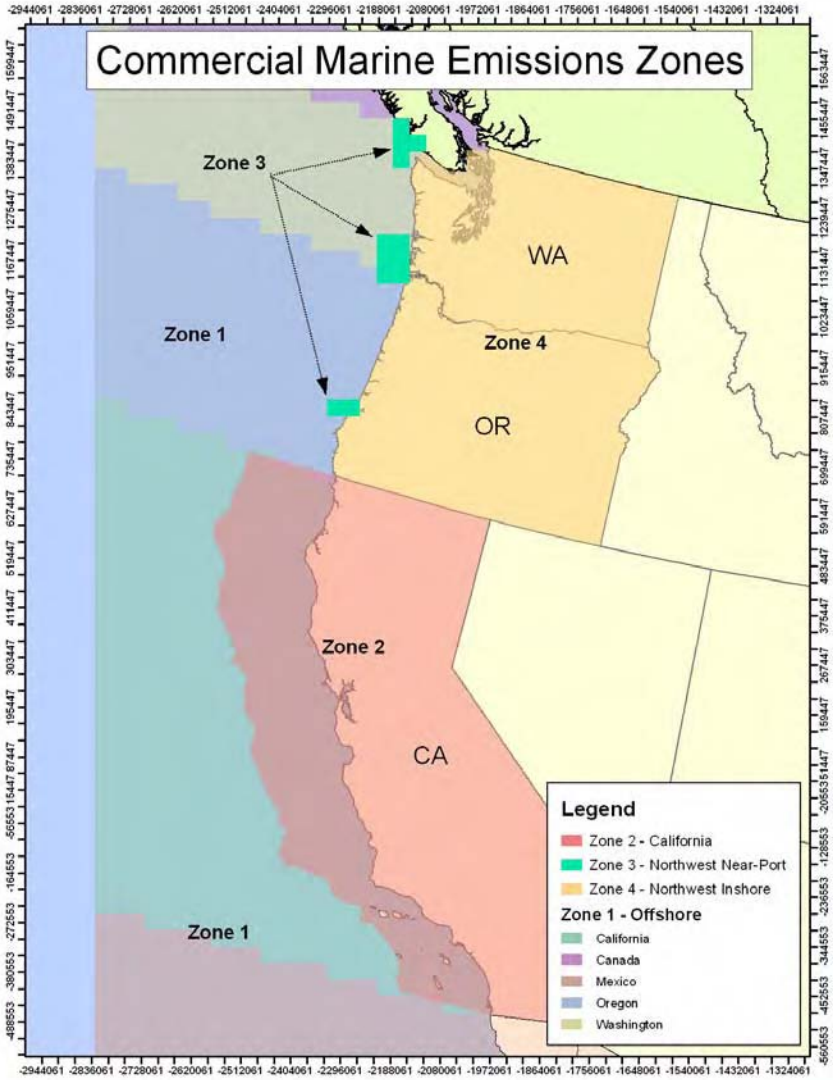

Figure 4. Distinct zones included in the WRAP commercial marine emissions inventory.

2018 Off-shore Emissions

Projection factors for future year commercial marine emissions were derived from a study performed by Corbett and Wang (2005). This projection was based on an investigation of the historic trend in the larger vessels' installed power. The installed power combines the propulsion power of individual vessels and number of calls of each vessel to the WRAP coastal ports. The historic trend shown in Figure 3 does not provide a sufficient number of years to determine the form of the equation to use to project future year activity. The fit of the historic data was equivalent whether an exponential fit (equivalent to compound annual growth rate (CAGR)) or a linear regression was used. For this work, therefore, an average of the exponential and linear regression was used to project future year commercial marine activity, per agreement and discussion with CARB staff, and thereby matching CARB projections (CARB, 2005). These average projection factors are shown in Table 11; they were applied to all three west coast states, to all in-

shore and offshore emissions. No emission rate decrease was projected because international standards are not expected to affect emissions.

More detailed discussions of the development of the off-shore mobile source emissions inventories can be found n Pollack, et al., 2006.

Table 11. Projection factors for ocean-going vessels.

Future Year	Relative to 2002
2008	1.39
2013	1.79
2018	2.30

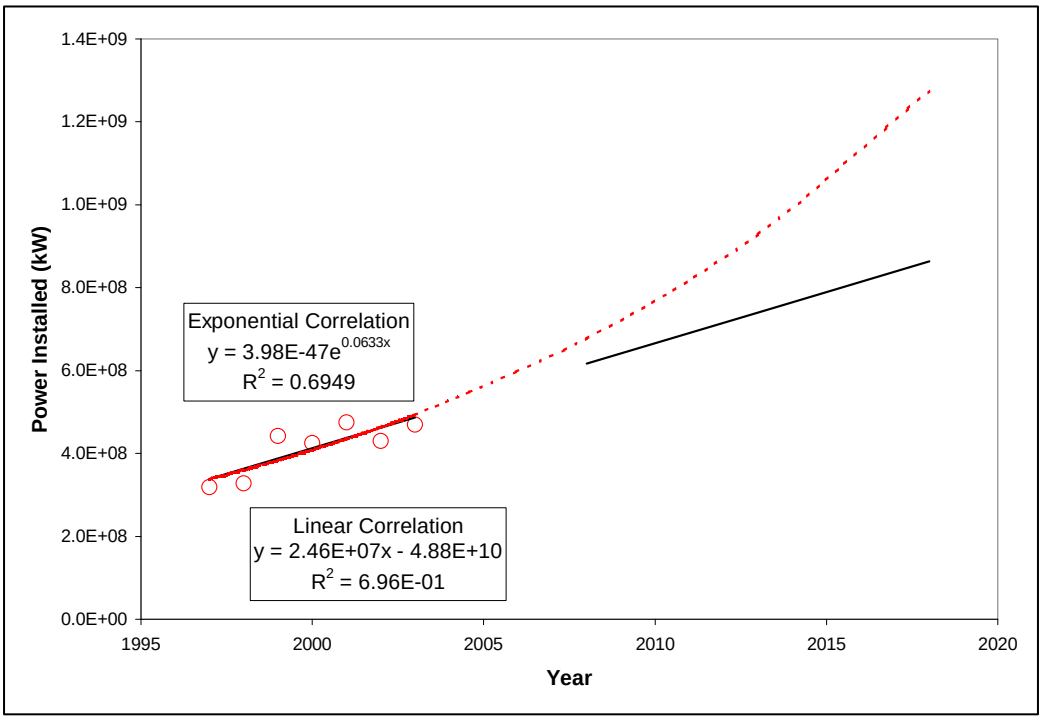

Figure 5. Commercial marine installed power trend and analysis.

Emissions Summaries

Summaries of the gridded off-shore source emissions for the Base02b, Plan02c and Base18b inventories by state and county, annual and seasonal periods, can be found on the TSS at: http://vista.cira.colostate.edu/tss/Results/Emissions.aspx.

Final Report

Shoreside Power Feasibility Study for Cruise Ships Berthed at Port of San Francisco

Prepared for

Port of San Francisco
Pier 1
San Francisco, CA 94111

Prepared by

ENVIRON International Corporation
Seaworthy Systems, Inc.
Han-Padron Associates
and
YEI Engineers

September 13, 2005

DISCLAIMER

This is a final report as submitted by ENVIRON International Corporation. The opinions and conclusions expressed or implied in this report are those of ENVIRON International Corporation. They are not necessarily those of the Port of San Francisco.

ACKNOWLEDGEMENTS

ENVIRON International wants to acknowledge several participants in this study that were especially helpful.

The Port of San Francisco, especially John Doll, contributed continued comments and insight on the workings of the port and cruise lines.

The Cruise Terminal Environmental Advisory Committee (CTEAC) members for their continued comments throughout the project.

The cruise lines, especially Tom Dow of Princess Lines, were very forthcoming with information on the visiting ships and their experience in other ports on the West Coast.

Pacific Gas & Electric, especially William Zeller, for his review of the design and cost estimates of a conceptual power distribution and transmission infrastructure for shoreside power as well as inputs on the electrical rates for shoreside power.

Our subcontractors, Han-Padron Associates, Seaworthy Systems, Inc., and YEI Engineers, Inc., for their professional and high caliber contributions.

TABLE OF CONTENTS

Page

1. INTRODUCTION 1-1

1.1 Background 1-1
1.2 Objectives and Scope of the Study 1-1
1.3 Caveats 1-2
1.4 Report Organization 1-3

2. SELECTION OF POTENTIAL CRUISE SHIPS FOR SHORESIDE POWER 2-1

2.1 Data Gathering For Cruise Ship Selection 2-1
2.2 Port Call Data Analysis 2-1
2.3 Vessel Engine/Generator Data 2-4
2.4 Candidate Cruise Ship Recommendations 2-5

3. HOTELLING MODE POWER DEMAND ANALYSIS 3-1

3.1 Princess Cruises Shoreside Power Facility Juneau, Alaska 3-1
3.2 Dockside Load Data for Selected Cruise Ships 3-2
3.3 Existing Estimated Dockside Power Demand 3-3
3.4 Future Estimated Dockside Power Demand 3-4

4. AUXILLARY MODE EMISSION ANALYSIS 4-1

4.1 Port Call Data Summary 4-1
4.2 Emission Factors for Marine Generator Engines 4-2
4.3 2004 Transit and Berthing Auxiliary Engine Emission Estimates 4-4
4.4 Shoreside Power Emission Reduction Estimates 4-11
4.5 Net Shoreside Power Emission Reduction Estimates 4-12
4.6 Projected 2020 Shoreside Power Emission Estimates 4-13

5. CONCEPTUAL DESIGN OF A SHORESIDE POWER SYSTEM 5-1

5.1 Overview of Juneau Shoreside Power System for Princess Cruise Lines 5-1
5.2 Electrical Power Infrastructure Conceptual Design at the Port of San Francisco 5-2
5.3 Overview of Power Transmission/Distribution to the Ships 5-3
5.4 Energy and Transmission Distribution to Terminals 5-3
5.5 Power Delivery within the Terminals 5-9
5.6 Summary of the Terminal Infrastructure, and Operating Costs 5-10
5.7 Shipboard Alteration Analysis 5-14
5.8 Description of Proposed Shore Power Operations at the Port of San Francisco Cruise Ship Terminal 5-21
5.9 Shipboard Cost Estimates for Using Shoreside Power 5-23
5.10 Summary and Recommendations 5-26

6. ALTERNATIVE CONTROL TECHNOLOGIES 6-1

6.1 New Engines and Engine Modifications 6-2
6.2 Engine Exhaust After-treatment Systems 6-4
6.3 Fuel Modifications and Alternative Fuels 6-6
6.4 Advanced Technologies 6-12
6.5 Summary 6-12

7. COST-EFFECTIVENESS ANALYSIS 7-1

7.1 Costs Summary 7-1
7.2 Cost-Effectiveness Summary 7-3

8. CONCLUSIONS AND RECOMMENDATIONS 8-1

8.1 Assumptions 8-1
8.2 Conclusions 8-2
8.3 Recommendations for Further Study 8-5

9. REFERENCES 9-1

APPENDICES

Appendix A: Data Gathering Survey of Cruise Ships
Appendix B: Lloyd's Vessel and Generator Data
Appendix C: Photographs of General Conditions of the Visible Distribution Lines and Underground Vaults in the Area of the Mission and Embarcadero Substations.
Appendix D: Breakdown Cost Estimates for a Shoreside Power System
Appendix E: PG&E E-20 Rate Schedules
Appendix F: Responses to Comments on Draft Final Report for the PoSF Shoreside Power Feasibility Project, August 8, 2005

TABLES

Table 2-1. Cruise ship port call data at the Port of San Francisco in 2004 2-2
Table 2-2. General vessel data for cruise ships called at the Port of San Francisco in 2004 2-3
Table 2-3. 2005 Port call data and general vessel data for DAWN PRINCESS 2-4
Table 2-4. Vessel engine and generator data extracted from the Lloyd's database for the recommended candidate cruise ships. 2-5
Table 3-1. Summary of generator engine and fuel data for selected cruise ships provided by the ship operators 3-3
Table 3-2. Nominal shoreside power consumption for selected cruise ships provided by the ship operators 3-3
Table 4-1. Summary of port call data for selected cruise ships. 4-1
Table 4-2. US EPA (1999b, 2003) baseline emission factors for marine engines. 4-2
Table 4-3. Emission factors for auxiliary engines used in the

PoLA emission inventory report. 4-2
Table 4-4. Emission factors found in the IVL 2004 report for average 1999 conditions. 4-3
Table 4-5. Gas turbine engines 4-4
Table 4-6. Vessel calls and average berthing (hotelling) time for 2004. 4-6
Table 4-7. Operator provided or estimated auxiliary load for cruise ships 4-7
Table 4-8. Vessel auxiliary engine types 4-8
Table 4-9. 2004 annual auxiliary power transit and berthing emission estimates 4-9
Table 4-10. 2004 per call auxiliary power emission estimates 4-10
Table 4-11. Annual shoreside power fuel consumption and emission estimates for the selected candidate cruise ships 4-12
Table 4-12. Shoreside power fuel consumption and emission estimates per port call for the selected candidate cruise ships 4-12
Table 4-13. Powerplant emission factors 4-12
Table 4-14. Berthing emissions, net shoreside power emission reduction estimates, and percent emission reductions for the selected candidate cruise ships. 4-13
Table 4-15. 2004 load-weighted average per call berthing and transit emissions associated with auxiliary loads, and projected 2020 berthing and transit emissions 4-14
Table 5-1. Possible power source and distribution distance. 5-7
Table 5-2. Preliminary opinion of construction costs for possible power sources 5-8
Table 5-3. Summary of cost estimates for a conceptual shoreside power system for cruise ships berthed at the Port of San Francisco 5-14
Table 5-4. Summary of annual operating cost estimates for operating the conceptual reel towers 5-14
Table 5-5. Classification societies for the three selected cruise ships without shoreside power capability 5-15
Table 5-6. Proposed sequence of events for connections of shoreside power 5-21
Table 5-7. Proposed sequence of events for termination of shoreside power. 5-22
Table 5-8. Sample vessel and 4-vessel cohort load demands for energy cost estimates 5-25
Table 5-9 Annual fuel savings for selected ships 5-26
Table 6-1. Engine modification alternatives 6-3
Table 6-2. Potential exhaust after-treatment alternatives 6-4
Table 6-3. Fuel specifications for the four vessels studied. 6-6
Table 6-4. Summary cost and effectiveness for alternative control measures for 4-vessel cohort 6-13
Table 7-1. Cost Summary for individual vessels and vessel cohorts (2 vessels DAWN and REGAL PRINCESS, 3 vessels add MERCURY) 7-2
Table 7-2. Emission reduction and cost-effectiveness summary (2 vessels DAWN and REGAL PRINCESS, 3 vessels add MERCURY). 7-3
Table 8-1. Summary of emission benefits and cost-effectiveness results of shoreside power 8-4
Table 8-2. Summary of costs, emission reductions, and cost effectiveness of alternative control measures for four-vessel cohort scenario 8-5

FIGURES

Figure 4-1. Schematic map of study area 4-5
Figure 4-2. Comparison of 2004 and 2020 berthing emissions..... 4-15
Figure 4-3. Comparison of 2004 and 2020 transit emissions. 4-15
Figure 5-1. A schematic illustrating the PG&E substations within the local electric transmission system..... 5-5
Figure 5-2. A schematic illustrating the three candidate power sources and routes for a distribution and transmission infrastructure for shoreside power..... 5-6
Figure 5-3. Conceptual plan of a one-berth shoreside power system for the Port of San Francisco 5-11
Figure 5-4. Conceptual plan of a two-berth shoreside power system for the Port of San Francisco 5-12
Figure 5-5. Conceptual design of a cable reel tower for a shoreside power system..... 5-13

1. INTRODUCTION

1.1 Background

The Port of San Francisco has entered into a development and lease agreement with a developer to build a mixed use/cruise terminal facility at Piers 30-32. The cruise terminal will be named the James R. Herman International Cruise Terminal and will become the primary cruise terminal for San Francisco. The existing terminal at Pier 35 does not efficiently meet the current and anticipated increases in cruise ship port calls due to a boom in the cruise industry of the past few years, according to a study funded by the Port[1]. As part of the implementation of a Mitigation, Monitoring and Reporting Program resulting from the adoption of the California Environmental Quality Act (CEQA) Environmental Impact Report (EIR), the Port Commission established an air and water quality advisory group called the Cruise Terminal Environmental Advisory Committee (CTEAC) to review and recommend additional feasible mitigation measures that could address air and water impacts of cruise ship activity. One of the potential mitigation measures for reducing air pollution impacts is the use of technologies such as shoreside electrical power to reduce hotelling emissions from cruise ships while at berth, by way of allowing the ships to turn off their self generating electrical units[2]. Alternatives to shoreside power for air emission reduction could include the use of low sulfur fuels and new engine technologies that would reduce emissions not only at berth but also throughout a cruise ship voyage.

In October 2004, the Port retained ENVIRON International Corporation (ENVIRON) to lead a team consisting of ENVIRON, Han-Padron Associates, Seaworthy Systems, Inc., and YEI Engineers, Inc., to conduct a study to assess the feasibility and cost-effectiveness of shoreside power and alternative air emission control technologies for cruise ships berthed at the new cruise terminal. This document reports the findings of that study.

1.2 Objectives and Scope of the Study

The objectives of the study were to 1) analyze the current and planned vessel operations and berth facilities, 2) identify potential candidate cruise ships to evaluate the feasibility, emissions benefits and associated costs of the use of shoreside power and 3) explore alternative air emissions control technologies while ships are at berth at the cruise terminal to reduce hotelling emissions, as well as other measures that may affect emissions during ship transit in the Bay Area.

The project tasks included:

- Selecting candidate cruise ships for shoreside power;
- Estimating hotelling power demand;

---

[1] "Alternative Sites for the James Herman Cruise Ship Terminal," Discussion Draft Report to the Port Commission, Port of San Francisco, CA, September 2, 1998.

[2] This is sometimes called "cold ironing". The phrase is from the period when ships were steam powered, and turning off the boilers that made the steam was called "cold ironing", because the boilers ("iron") were no longer generating heat and steam.

- Estimating hotelling mode and transit mode emissions;
- Developing conceptual design and cost estimates for a shoreside power system.
- Performing cost-effectiveness and feasibility analyses of shoreside power systems and alternative air emissions control technologies; and
- Reporting and presenting results of the study.

1.3 Caveats

In carrying out this project, several assumptions were necessarily made. In addition, some portions of the analyses could not be carried out in further depth due to either project design uncertainties and/or limitations in the resources available for this project.

Aesthetics - The aesthetics of the waterfront in San Francisco are critically important. Because the port is not a typical industrial port, such as the Port of Oakland or the Port of Los Angeles, additional considerations will have to be made regarding the aesthetics of the shoreside power design. The material provided here gives the reader a general understanding of the visual impacts of the shoreside power equipment. Artists' renderings and such will further facilitate assuring that the equipment for shoreside power is aesthetically acceptable.

Candidate ships - Four candidate ships were selected for this study, representing the likely mix of visiting ships in future years. Actual ships and frequency of visits will be different. Nevertheless, this selection of ships is likely a reasonable approximation of the minimum port use patterns, and thus the most conservative assumption for cost-effectiveness evaluations.

Cost of ship modification - A related assumption is that the cost of the ship modifications needed for shoreside power are assigned as if the Port of San Francisco were the only port at which the ships used shoreside power. Costs are NOT amortized over several ports. For this study, we assumed that the ships needing such conversion were doing so only because of the San Francisco program. However, if, for example, a single ship uses shoreside power at a port other than the Port of San Francisco, shipside modification costs should be halved for the purpose of this study. Thus, the results presented here are a "worst case" or conservative estimate of the cost effectiveness.

Electrical Energy Provider – In assessing the overall cost effectiveness of shoreside electrification, the provider of the energy, the cost rate of that energy, and the allocation of the construction and operating costs for the shoreside portion of the project design needs to be eventually determined. In carrying out this work, we could not, and did not establish firm electrical rates, nor did we determine who would likely bear the costs of various shoreside infrastructures. A range of rate structures estimated by PG&E for one vessel, and four-vessel cohort scenarios utilizing shoreside power were used in this study.

Feasibility, not design and implementation – As noted previously, this is a feasibility study. If, upon the basis of this report and other information, it is decided to proceed with shoreside power provisions, full engineering design and cost analyses are yet to be carried out. Some of that would be done by the electricity provider, some by the transmission provider, some by the developer, and some by the ship owners.

Safety – Installations elsewhere, in both cruise and industrial port areas have shown that safe movement of goods and people are not negatively affected by the shoreside power equipment.

Service level – A characteristic of the Port of San Francisco is that many ships (and cruise lines) visit, but only a few visit often. The shoreside projects in Juneau, Alaska and Seattle, Washington, involve mainly one cruise line and a high number of ship calls.

Shoreside infrastructure costing – Because this is a "conceptual" or "feasibility study", it was beyond the scope of this project to do detailed engineering design. Nevertheless, we did carry out general engineering design, based on similar installations elsewhere, to arrive at costs and general descriptions of the proposed facility. A significant uncertainty in this study relates to how the shoreside infrastructure cost in bringing electricity to the pier(s) should be allocated between the pier (concession operations, etc.) and the ship electricity demands through shoreside power. A careful examination of this requires a full scale power provider study to reconcile.

1.4 Report Organization

Section 2 presents the recommendations on candidate cruise ships for shoreside power at the new cruise ship terminal. Sections 3 and 4 discuss the results of the hotelling mode power demand and emission analyses, respectively, for the selected cruise ships, as well as estimates for other cruise ships in the 2004 port call data. Section 5 presents a conceptual design and cost estimates for a shoreside power system. Section 6 discusses alternative control technologies for cruse ships to reduce hotelling and transit emissions. Section 7 presents the results of cost-effectiveness analyses of the shoreside power system and alternative control technologies for reducing emissions, as well as some discussion on potential funding sources for shoreside power. Section 8 presents the conclusions of the study. Section 9 provides references cited in the report. Several appendices contain back up data used in the study, as well as responses to comments received on the draft final report.

2. SELECTION OF POTENTIAL CRUISE SHIPS FOR SHORESIDE POWER

This section presents the recommendations on candidate cruise ships for shoreside power at the new cruise ship terminal. The recommendations were based on the review of the 2004 and proposed/estimated 2005 port call data provided by the Port (PoSF, 2004)[1] for cruise ships berthed at the Port's cruise ship terminal, as well as vessel engine/generator information obtained from the Lloyd's database (Lloyd, 2004) for those cruise ships.

2.1 Data Gathering For Cruise Ship Selection

As part of the data gathering effort in the cruise ship selection task, ENVIRON developed a two-phase data gathering questionnaire to facilitate the cruise ship selection. The first phase was to collect from the Port the past 12-month vessel call records for all ships that berthed at the Port's existing cruise ship terminal. PoSF, 2004, included the following information:

- Vessel name
- Vessel IMO ID
- Vessel type code
- Vessel gross tonnage
- Vessel date of build
- Arrival dates/times
- Departure dates/times
- Flag
- Operator's name
- Agent name

In addition, the Port also provided the 2005 port call schedule (PoSF, 2004) for cruise ships that are scheduled to call at the Port's cruise ship terminal. Based on these 2004 and 2005 port call data, as well as available vessel engine/generator data from the Lloyd's database, ENVIRON recommended four vessels as potential candidate cruise ships to be studied for cost and feasibility of shoreside power to reduce hotelling emissions while at berth.

After receiving approval from the Port on the recommended candidate cruise ships, the Port assisted ENVIRON in gathering detailed ship and machinery data required for the shoreside power analysis from operators of the selected cruise ships. The data gathering questionnaire is attached with this report as Appendix A.

2.2 Port Call Data Analysis

Table 2-1 summarizes the PoSF, 2004 port call data. As shown in Table 2-1, there was a total of 83 port calls in 2004 for a total of 1,032 hours of berth time from 21 cruise ships, with an average berth time of about 12 hours for the 2004 vessel fleet. The top six most frequently calling cruise ships at the Port's cruise ship terminal in 2004 were as follows:

[1] The 2004 and 2005 port call data were provided by the Port in September 2004, and these port call data or schedule might have been revised since then.

1. MERCURY
2. REGAL PRINCESS
3. CRYSTAL HARMONY
4. YORKTOWN CLIPPER
5. SAPPHIRE PRINCESS
6. SILVER SHADOW

Table 2-1. Cruise ship port call data at the Port of San Francisco in 2004 (as of September 2004).

Vessel Name	Call	Total Berth Time (hrs)	Avg. Berth Time/Call (hrs)	% of Call	% of Berth Time
MERCURY	17	170	10	20.5%	16.5%
REGAL PRINCESS	12	118	10	14.5%	11.4%
CRYSTAL HARMONY	11	109	10	13.3%	10.6%
YORKTOWN CLIPPER	9	180	20	10.8%	17.4%
SAPPHIRE PRINCESS (Calls to be replaced by Dawn Princess in 2005)	7	69	10	8.4%	6.7%
SILVER SHADOW	5	95	19	6.0%	9.2%
NORWEGIAN SKY/PRIDE OF ALOHA	3	76	25	3.6%	7.4%
SUMMIT	3	34	11	3.6%	3.3%
CORAL PRINCESS	2	19	10	2.4%	1.8%
SUN PRINCESS	2	14	7	2.4%	1.4%
VOLENDAM	2	20	10	2.4%	1.9%
AMSTERDAM	1	9	9	1.2%	0.9%
DIAMOND PRINCESS	1	9	9	1.2%	0.9%
MAXIM GORKIY	1	29	29	1.2%	2.8%
NORWEGIAN SPIRIT (ex-SuperStar Leo)	1	5	5	1.2%	0.5%
NORWEGIAN STAR	1	13	13	1.2%	1.3%
NORWEGIAN SUN	1	15	15	1.2%	1.5%
OOSTERDAM	1	7	7	1.2%	0.6%
RADIANCE OF THE SEAS	1	17	17	1.2%	1.6%
SEVEN SEAS MARINER	1	14	14	1.2%	1.4%
VISION OF THE SEAS	1	11	11	1.2%	1.1%
Total/Average	**83**	**1,032**	**12**	**100.0%**	**100.0%**

The SILVER SHADOW, with a gross tonnage of about 28,000, is a smaller cruise ship, and the YORKTOWN CLIPPER, with a gross tonnage 2,300, is even smaller, as compared to other the frequent callers (see Table 2-2). The Port indicated that almost all of the port calls for SAPPHIRE PRINCESS will be replaced by DAWN PRINCESS in 2005. Table 2-3 shows the 2005 port call data, and general vessel data for the DAWN PRINCESS. Based on the 2004 port call data (and 2005 data for DAWN PRINCESS), the top four frequently calling ("frequent flyers") cruise ships that are scheduled to call at Port are as follows:

1. REGAL PRINCESS
2. DAWN PRINCESS (replacing SAPPHIRE PRINCESS' port calls at the port)
3. CRYSTAL HARMONY[2], and
4. MERCURY

[2] Note that the Port was informed recently that the CRYSTAL HARMONY was sold to NYK, a Japanese line, and is scheduled to make only 1 call in 2005. However, Crystal has considered bringing the SUPERIOR, a newer ship, to the Port in 2007. Results from the CRYSTAL HARMONY feasibility and cost-effectiveness assessment can still be used for other cruise ships that have similar characteristics.

These four vessel are potential candidate cruise ships for shoreside power to reduce hotelling emissions while at berth based on the port call and berth time data[3]. The operators for these candidate cruise ships are Princess for the REGAL and DAWN PRINCESS cruise ships, Crystal for the CRYSTAL HARMONY cruise ship, and Celebrity for the MERCURY cruise ship.

It should be noted that only four candidate cruise ships were examined because these ships represent most of the calls. The remaining bigger ships call only one to three times a year and, therefore, are not feasible candidates for shoreside power. This situation creates a unique profile for the Port of San Francisco. Most other ports considering shoreside power have many frequent flyers that are operated by only a few cruise lines. In contrast, the Port of San Francisco has many less frequently called cruise ships operated by different cruise lines.

Also, the DAWN PRINCESS cruise ship already has a shoreside power connection, which provided a scenario with no or minimum shipboard cost for shoreside power to reduce hotelling emissions while at berth. In addition to the DAWN PRINCESS, Princess has two other cruise ships with shoreside power connections (the SUN PRINCESS and the CORAL PRINCESS) that call only one or two times per year at the Port.

Table 2-2. General vessel data for cruise ships called at the Port of San Francisco in 2004.

Vessel	IMO ID	Type Code	Gross Tonnage	Date of Build	Flag	Operator
AMSTERDAM	9188037	MPR	61,000	2000	Netherlands	HOLLAND
CORAL PRINCESS	9229659	MPR	91,627	2002	Bermuda	PRINCESS
CRYSTAL HARMONY	8806204	MPR	49,400	1990	Bermuda	CRYSTAL
DIAMOND PRINCESS	9228198	MPR	113,000	2004	Bermuda	PRINCESS
MAXIM GORKIY	6810627	MPR	24,981	1969	Bermuda	UNICOM
MERCURY	9106302	MPR	77,713	1997	Bermuda	CELEBRITY
NORWEGIAN SKY/PRIDE OF ALOHA	9128532	MPR	77,104	1999	USA/ Bermuda	NORWEGIAN
NORWEGIAN SPIRIT (ex-SuperStar Leo)	9141065	MPR	75,338	1998	Panama	NORWEGIAN
NORWEGIAN STAR	9195157	MPR	91,740	2001	Panama	NORWEGIAN
NORWEGIAN SUN	9218131	MPR	77,104	2001	Bermuda	NORWEGIAN
OOSTERDAM	9221281	MPR	81,769	2003	Netherlands	HOLLAND
RADIANCE OF THE SEAS	9195195	MPR	90,090	2001	Bermuda	ROYAL CARIBBEAN
REGAL PRINCESS	8521232	MPR	69,845	1991	Great Britain	PRINCESS
SAPPHIRE PRINCESS	9228186	MPR	113,000	2004	Bermuda	PRINCESS
SEVEN SEAS MARINER	9210139	MPR	48,015	2001	France	RADISSON
SILVER SHADOW	9192167	MPR	28,258	2000	Bahamas	SILVERSEA
SUMMIT	9192387	MPR	91,000	2001	Bermuda	CELEBRITY
SUN PRINCESS	8210986	MPR	77,499	1995	Great Britain	PRINCESS
VISION OF THE SEAS	9116876	MPR	78,491	1998	Bahamas	ROYAL CARIBBEAN
VOLENDAM	9156515	MPR	63,000	1999	Netherlands	HOLLAND
YORKTOWN CLIPPER	928931[1]	MPR	2,354	1988	USA	CLIPPER SHIPS

[1]U.S. Coast Guard Number.

[3] Because of its size, the YORKTOWN CLIPPER was excluded as a candidate cruise ship for this study even though it called often in 2004.

Table 2-3. 2005 Port call data and general vessel data for DAWN PRINCESS.

Vessel Name	Call	Total Berth Time (hrs)	Avg. Berth Time/Call (hrs)	% of Call	% of Berth Time
DAWN PRINCESS	12	125	10	16.4%	16.0%
	IMO ID	**Type Code**	**Gross Tonnage**	**Date of Build**	**Flag & Operator**
	9103996	MPR	77,499	1997	Bermuda; PRINCESS

2.3 Vessel Engine/Generator Data

In addition to port call and berth time, the emissions from hotelling also depend on the type of vessel engines/generators that are used to generate power for hotelling. For instance, gas turbine engines generally produce lower criteria emissions, especially NOx and PM emissions, than conventional diesel engines. However, the fuel costs for turbines can be significant because the turbines are less efficient (consume 40% more than a diesel engine) and the fuel costs are much higher. Table 2-4 shows the vessel engine and generator data extracted from the Lloyd's database for the potential candidate cruise ships[4]. Appendix B tabulates the vessel engine/generator data for all the cruise ships that called at the Port in 2004, except the smallest cruise ship berthed at the Port, YORKTOWN CLIPPER, as there was no information available from the Lloyd's database for this vessel.

As shown in Table 2-4, all four of these candidate cruise ships use diesel engines to generate 6.6 kV, 3-phase, 60 Hz power for hotelling while at berth. Also, all of the candidate cruise ships, except the MERCURY cruise ship, use four main diesel engines driving four generators to deliver 6.6 kV, 3-phase, 60 Hz power. In addition to the main generators, the CRYSTAL HARMONY also has 2 smaller auxiliary diesel engines and an auxiliary generator to deliver 6.6 kV, 3-phase, 60 Hz power, and the DAWN PRINCESS also has a smaller auxiliary generator to deliver 400 volt, 3-phase, 60 Hz power for low voltage applications. The MERCURY has two main propulsion diesel engines, four bigger auxiliary diesel engines driving four generators to deliver 6.6 kV, 3-phase, 60 Hz power, and a smaller auxiliary diesel engine driving an auxiliary generator for low voltage applications.

[4] These Lloyd data were considered as preliminary data, and were used along with the port call data for candidate cruise selection purposes only. Actual engine and generator data for the selected cruise ships were collected from the Phase 2 data gathering effort.

Table 2-4. Vessel engine and generator data extracted from the Lloyd's database for the recommended candidate cruise ships.

Vessel	Main Engine				Main Generator					
	Units	Maker	Model	kW	Units	Maker	Model	kW	Voltage	Frequency
CRYSTAL HARMONY	4	MAN/Mitsubishi	8L58/64	8640	4	Stromberg	N/K	8250	6600	60
DAWN PRINCESS	4	Fincantieri/Sulzer	16ZAV40S	11650	4	Not Reported	Not Reported	11128	6600	60
MERCURY	2	MAN B&W	6L48/60	6300	Not Applicable					
	2	MAN B&W	9L48/60	9450						
REGAL PRINCESS	4	MAN B&W	8L58/64	9720	4	Not Reported	Not Reported	9410	6600	60

Vessel	Auxiliary Engine				Auxiliary Generator					
	Units	Maker	Model	kW	Units	Maker	Model	kW	Voltage	Frequency
CRYSTAL HARMONY	1	Wartsila	8R32E	3240	1	Stromberg	NA	3000	6600	60
	1	Detroit Diesel USA	8163-7305	612						
DAWN PRINCESS	1	Not Reported			1	NA	NA	600	440	60
MERCURY	4	MAN B&W DIESELGEU	6L-40/54	4420	4	KAICK	DIDBN	4100	6600	60
	1	CUMMINSUSA	KTA-50G2	1007	1	KAICK	DSG	840	660	60
REGAL PRINCESS	0	Not Applicable			0	Not Applicable				

2.4 Candidate Cruise Ship Recommendations

Based on the port call and the vessel engine/generator data, ENVIRON recommended the following vessels as candidate cruse ships for shoreside power feasibility and cost-effectiveness analyses to reduce hotelling emissions while at berth at the Port's cruise ship terminals.

1. REGAL PRINCESS
2. DAWN PRINCESS
3. CRYSTAL HARMONY,
4. MERCURY

After receiving approval from the Port on these recommended cruise ships, ENVIRON worked with the Port to conduct Phase 2 of the data gathering effort to gather detailed engine vessel and machinery data from the operators of these cruise ships. These data were used in the power demand and emission analyses, as well as in the assessment of anticipated shipside alteration needs to accommodate the shoreside power system.

3. HOTELLING MODE POWER DEMAND ANALYSIS

This section presents the results of the hotelling power demand analysis for the selected cruise ships based on the data received from their operators and from port call data provided by the Port. For comparison purposes, the shoreside power facility at Juneau, Alaska was reviewed and summarized in this section. Other available and applicable information and data for shoreside power projects at other ports while this study was conducted were also used and/or referenced in the report.

Again, the cruise ship fleet profile for the Port has many less frequently calling cruise ships that are operated by various cruise lines. This makes the Port unique and different from other ports, which have many frequently calling ships that are operated by one or a small number of cruise lines (i.e., solitary usage of cruise lines). Also, it should be noted that the Port is the only cruise terminal facility contemplating the feasibility of a shoreside power facility that may serve a range of cruise lines.

As discussed in Section 2, four candidate vessels were selected for a feasibility study of shoreside power at the James R. Herman International Cruise Terminal, Piers 30-32, Port of San Francisco, based on a detailed analysis of cruise ship activity at the Port. The selected ships are the CELEBRITY MERCURY, CRYSTAL HARMONY, DAWN PRINCESS, and REGAL PRINCESS. The DAWN PRINCESS was previously modified to receive shoreside hotelling power at Juneau, Alaska. The other three ships are not currently equipped to receive shoreside hotelling power.

3.1 Princess Cruises Shoreside Power Facility Juneau, Alaska

The Princess Cruises Shoreside Power facility at Juneau, Alaska is a unique installation. It uses a nearby hydroelectric power station to supply both hotelling electricity and an electrically generated heating steam (from a land based steam generator) to the ship. The hydroelectric plant produces zero emissions and arguably represents an environmentally ideal renewable energy source. Construction of the facility and the initiation of operations with the ship were expeditiously accomplished in six months.

Due to the twenty-foot tidal action at Juneau, a substantial structure and facility are required to position and support the hotelling power supply cables and steam heat connections between the ship and shore. A 135-foot long, 25-foot high gantry and festoon system provide the flexibility in cable and hose connections required to accommodate tidal action and other ship movements at dockside. However, no construction of this magnitude should be required at the Port of San Francisco because tidal action in the San Francisco Bay is generally less than ten feet[1], and no steam connections are required.

The Juneau, Alaska system is rated to deliver 16.25 mega watts (MW) of ship hotelling electricity, with estimated 7 to 11 MW of ship hotelling electrical loads, and 4 to 6 MW of ship steam loads. Four 3-inch electric power cables connect the ship and shore substation, using quick acting plugs and receptacles developed for the mining industry. These shore power cables

[1] http://sfports.wr.usgs.gov/cgi-bin/TS-Plot.cgi

and the steam heating system hoses are routed through a watertight door on the port side of the ship. A new steel bulkhead has been installed adjacent to the shipboard cable run in order to comply with high voltage fire protection requirements. An onboard power management system (PMS) automatically synchronizes the shore power supply with the ship electrical generators. All shore power functions aboard Princess Cruise Lines cruise ships with shoreside power capability (e.g., the DAWN PRINCESS) are managed under the direct supervision of ship engineering officers.

It is anticipated that the Port of San Francisco's conceptual shore power system will likely follow along the same lines, with similar shipboard engineering design and operating considerations. As an example, all four of the selected vessels are fitted with 6.6 kV, 60 Hertz electric systems. However, no shore supply of steam heat at the Port of San Francisco cruise ship terminal is currently under consideration.

As noted earlier the Port served nine cruise lines and 21 different ships in 2004. Since the Juneau facility only serves Princess Cruise Lines and no other cruise lines, it is unique and may or may not serve as an industry-wide model or a model for the Port of San Francisco.

3.2 Dockside Load Data for Selected Cruise Ships

The feasibility and cost effectiveness of reducing hotelling emissions via a shore power system or alternative control technologies are dependent upon, among others, the dockside load profile, safety requirements, and marine engineering design specifications of the ships in question.

The proposed shore power supply would be used in lieu of shipboard diesel electric generators to furnish ship energy requirements at dockside. As discussed in Section 2, each of the four selected cruise ships has a different combination of propulsion and electric power generating equipment. On the REGAL PRINCESS, DAWN PRINCESS, and CRYSTAL HARMONY, diesel electric propulsion/auxiliary engine generators are used to furnish hotel power at dockside. On the CELEBRITY MERCURY, dockside hotel power is provided by on-board ship service diesel generator sets (also called "gensets").

For the purpose of this study, the information of primary significance concerns the unit (or units) used to generate the hotel power at dockside, specifically the manufacturer, model, power rating in kiloWatts (kW) and type of fuel. These data are tabulated in Table 3-1. Table 3-2 shows the nominal shoreside power consumption data for each of the four selected ships. This information was provided by the cruise ship operators. As shown in Table 3-1, the engine and generator data provided by the cruise ship operators were slightly different from those found in the Lloyd's database (Table 2-4).

Table 3-1. Summary of generator engine and fuel data for selected cruise ships provided by the ship operators.

Vessel Name	Gross Tonnage	Number of Generator Engines Used	Make & Model	Rated Power (kW)	Diesel Fuel
CELEBRITY MERCURY	77713	3	MAN B&W 6L-40/54	4,320	IFO 380
CRYSTAL HARMONY	49400	1	MHI-MAN B&W 8L58/64	8,640	MDO, 1SO DMB
DAWN PRINCESS	77499	1	WARTSILA SULZER 16ZAV40S	11,650	IFO 380
REGAL PRINCESS	69845	1	MAN B&W 8L58/64	9,410	IFO 380/IFO 180 (Alaska)

Table 3-2. Nominal shoreside power consumption for selected cruise ships provided by the ship operators.

Vessel Name	Average Load (kW)	Load Fluctuation (kW)
CELEBRITY MERCURY	9,500	200
CRYSTAL HARMONY	6,000	1,000 to 2,000
DAWN PRINCESS	6,800	200 to 300
REGAL PRINCESS	6,700	200 to 300

3.3 Existing Estimated Dockside Power Demand

The reported ship electrical loads in Table 3-2 are considered reasonable. The magnitudes and fluctuations are within expectations considering the major hotel loads of cruise ships, such as air conditioning, ventilation (dependent upon ambient temperature and humidity conditions), and lighting (day versus night). Based upon the furnished data, a dockside power connection capable of delivering at least 10 MW at the ship main switchboard will be adequate for the selected cruise ships. Since ships operate with a power factor of 0.8, a 12.5 MW shore power supply will be required as the minimum to effectively serve all of the selected cruise ships.

For purposes of comparison, the Juneau, Alaska, shore facility, which was constructed and initially operated with the DAWN PRINCESS, has a power capacity of 16.25 MW, with estimated 7 to 11 MW for shoreside power. The Port of Seattle was completing a shore power installation to serve the new DIAMOND PRINCESS and SAPPHIRE PRINCESS cruise ships, which requires about 100 MW of shoreside power per call with a nine hour stay[2], or about 11 MW of shoreside power demand per vessel. These ships typically make the round-trip to the Juneau facility.

ENVIRON's Cold Ironing Cost Effectiveness Study for the Port of Long Beach (ENVIRON, 2004) suggested consideration of a 7.0 MW shoreside power installation to serve the Carnival cruise ship ECSTASY[3], which made 52 port calls at the Port of Long Beach in 2003. Other documented installations, studies, and proposals for supplying shoreside power to various types of ocean going vessels have been completed or are being encouraged/developed by the

[2] http://www.westcoastdiesel.org/files/outreach/Seattle%20Sept%2030th%20Fact%20Sheet%2003-11-05.pdf.
[3] Note that PRINCESS Cruise Line is a subsidiary of the Carnival Corporation.

California Air Resources Board, Port of Los Angeles, and in Europe. It should be noted that the emphasis of these proposals is shoreside power for cargo ships because they represent the vast majority of ship calls at a port.

3.4 Future Estimated Shoreside Power Demand

The shoreside power requirement for cruise ships calling at the Port in future years is difficult to ascertain. The cruise industry allocates capital assets comparable to any other business, on the basis of marketing and sales forecasts. The only way higher shoreside power needs can be effectively estimated is by obtaining information on planned calls of larger vessels at the Port. The Port projected that the port calls would steadily increase to 107 by 2020 from 83 in 2004 (PoSF, 2001).

One way to estimate future cruise ship hotelling power requirements is by comparing gross tonnage. Roughly speaking, the greater the gross tonnage, the higher the vessel's hotelling power consumption for air conditioning, ventilation, lighting, galley, laundry, water services, etc. The four ships selected for this study, at 50,000 to 77,713 tons, are not considered particularly large and their hotelling loads are relatively modest compared to other cruise ships in operation. The DIAMOND PRINCESS and SAPPHIRE PRINCESS, which will be using shoreside power at the Port of Seattle, have a gross tonnage of 113,000. The QUEEN MARY 2, at 150,000 tons, is representative of the largest cruise ships afloat. The hotelling load of such ships can easily be on the order of double what was described, above, for the selected cruise ships.

It should be noted that the Port's new cruise ship terminal at Piers 30-32 will be able to physically accommodate the largest of cruise ships, including the QUEEN MARY 2, on the eastern face of the pier, which will be the primary berth and will not require dredging. However, the northern berth will require an initial and periodic dredging, but should be able to accommodate a 1,000 ft cruise ship.

The foregoing 12.5 MW shore power estimate for the proposed shoreside power supply is adequate, but limited to ships with hotelling power demands, not necessary the emissions, equal to or less than CELEBRITY MERCURY, the largest of the four vessels selected for the study.

4. AUXILIARY MODE EMISSION ANALYSIS

This section presents the results of the hotelling air pollution emission analysis for the selected cruise ships. These estimates were based on the ships' port call data, average hotelling power load, and emission factors applicable to the diesel generators in these vessels.

4.1 Port Call Data Summary

CRYSTAL HARMONY, CELEBRITY MERCURY, and REGAL PRINCESS berth at the Port of San Francisco cruise ship terminal an average of 10 hours per call based on the 2004 port call data. The DAWN PRINCESS was also scheduled to berth at the cruise ship terminal at an average of 10 hours per call based on the 2005 port call data. It was reported that approximately twenty minutes to two hours per operation are required to handle and connect/disconnect shore power cables and steam supply/return hoses at the Juneau, Alaska facility. For the less demanding Port of San Francisco operation, it is considered reasonable that an average of one hour per call will be required following ship arrival to connect and activate, and then another hour prior to departure to deactivate and disconnect the proposed hotelling electric power supply. As a consequence, the practical maximum duration of a shore power supply per port call will be an average 8 hours for these cruise ships. This average berthing time and the number of port calls were used to estimate the shoreside power emissions for each selected cruise ship.

It should be noted that the duration of shoreside power will be greater than the time emissions from the ship diesel generator sets are terminated. As a minimum, restarting idle engines involves a warm-up period prior to the resumption of load. Exhaust emissions during the first minute of less of the engine warmup period are likely order of magnitude higher, as compared to emissions during normal operating conditions. However, the overall contribution of the warm-up emissions is small as compared to the total shoreside power emissions. In order to allow time for diesel engine shutdown and warm-up operations, the actual zero hotelling emissions (cold ironing) times will likely be on the order of two hours less per port call than the duration of the ship at the berth.

The number of port calls and average berthing time per call for the four selected cruise ships are summarized in Table 4-1.

Table 4-1. Summary of port call data for selected cruise ships.

Vessel Name	Port Call Data	Number of Port Calls	Average Berthing Time (hrs.)
CELEBRITY MERCURY	2004	17	10
CRYSTAL HARMONY	2004	11	10
DAWN PRINCESS	2005	12	10
REGAL PRINCESS	2004	12	10

4.2 Emission Factors for Marine Generator Engines

Table 4-2 shows the emission factors estimated by the U.S. EPA for Category 2 and 3 engines (EPA, 1999b, 2003). For the Category 2 engines, the average values shown in Table 4-2 were the average values used to estimate the emission reductions from the new emission standards (Samulski, 1999), and are quite similar to the emission factors for the highest power Category 1 engines. For Category 3 engines, EPA relied on a review of the base emission factors by ENVIRON (2002) based on the available data to date when the study was conducted.

Table 4-2. US EPA (1999b, 2003) baseline emission factors for marine engines.

Engine Category	HC [g/kW-hr]	NO_X [g/kW-hr]	CO [g/kW-hr]	PM [g/kW-hr]
Category 2 (5-30 l/cylinder)	0.134	13.36	2.48	0.32 low sulfur
Category 3 Medium Speed (> 300 rpm) (> 30 l/cylinder)	0.5*	16.6	0.7	Fuel sulfur dependence

* Converted from kg/tonne units in Lloyds (1995) using 210 (g/kW-hr) for "medium speed" engines.

The term "medium speed" refers to Category 3 engines with rated speeds typically of 300 to 750 (or higher) rpm that are typically 4-stroke diesel engines either geared to the propeller or through generators to an electric motor driving the propeller or could also provide electric power for the ship. Category 2 engines are either 2-stroke (GM-EMD or Fairbanks-Morse engines) or 4-stroke engine designs with rated speeds typically, but not always, above 750 rpm used either for propulsion or auxiliary power. Emission factors for these marine engine types were derived from previous reviews and emission measurement studies [EPA (2000), Environment Canada (1997), Lloyds (1995), ETC (1997), BAH (1991), Environment Canada (1999), and TRC (1989)].

Additional studies related to marine engine emissions have been published, including Cooper (2001 and 2003) and the ENTEC (2002) studies. The emission data from these studies were used in the Port of Los Angeles (PoLA) emission inventory report (Starcrest, 2004). Table 4-3 summarizes emission factors from these studies.

Table 4-3. Emission factors for auxiliary engines used in the PoLA emission inventory report.

Engine Category	HC [g/kW-hr]	CO [g/kW-hr]	NO_X [g/kW-hr]	PM [g/kW-hr]
Medium Speed – Residual Oil	0.4	1.1	14.7	0.3
Medium Speed – Gas Oil	0.4	1.1	13.9	0.3

The author of the 2002 ENTEC study later published a report to supplement the emission data compiled in that study for marine engines (IVL, 2004). The emission data used in the IVL 2004 study are summarized in Table 4-4 for engines built prior to the MARPOL (1997) requirements.

Table 4-4. Emission factors found in the IVL 2004 report for average 1999 conditions.

Engine Category	BSFC[1] [g/kW-hr]	HC [g/kW-hr]	CO [g/kW-hr]	NO_X [g/kW-hr]	PM [g/kW-hr]
Medium Speed – Residual Oil (2.4% sulfur)	215	0.2	1.1	14.0	0.5
Medium Speed – Gas Oil (0.6% sulfur)	205	0.2	1.1	13.2	0.2
Slow Speed – Residual Oil (2.4% sulfur)	195	0.3	0.5	18.1	1.3
Slow Speed – Gas Oil (0.6% sulfur)	185	0.3	0.5	17.0	0.2

[1] BSFC is brake specific fuel consumption in g/kW-hr.

A distinction between Category 2 and 3 medium speed engines was not made in the earlier ENTEC report, and therefore the average NOx emission rate is between the Category 2 and 3 medium-speed NOx emission rates from the EPA sponsored work. The PM emission rate for medium speed engines was well under that for slow speed engines using the same high sulfur heavy (residual) oil without an explanation. The PM measured from engines using high sulfur fuels is largely comprised of sulfate aerosols, so it is likely to be sensitive to the temperature of the particulate collection device and in turn the exhaust temperature. Still, there is no technical reason to think that medium speed engines produce lower particulate emissions than slow speed engines when burning the same fuel. In fact, the particulate emission factors in the ENTEC report are identical for medium and slow speed engine during maneuvering (a lower power and less efficient mode) at 2.4 g/kW-hr.

For this study, the IVL emission factors were used except for particulate emissions. The particulate emission factors do not correspond to the expected effect of added sulfur in the fuel, especially comparing the medium and slow speed engine emissions on the higher sulfur fuel. Therefore, it is necessary to correct the PM emissions based on the sulfur level in the fuel. The following equation was determined from test data of PM weight change with a change in the fuel sulfur level in an EPA study (EPA, 2002).

$$S_{PM\ adj} = BSFC * 7.0 * 0.02247 * 0.01 * (soxfuel - soxbas)$$

Where

soxbas = 0.4% sulfur in the IVL (2004)

soxfuel = % sulfur in fuel

$$PM\ (g/kW\text{-}hr) = 0.2 + S_{PM\ adj}$$

The equation is derived by estimating that the fuel sulfur partially converts (2.247%) to SO_3 (with the remainder emitted as SO_2), which rapidly hydrolyzes in the humid exhaust to hydrated sulfuric acid [H_2SO_4*(7)H_2O] and condenses on other particulates. Hence, the molecular weight adjustment of 7.0 (ratio of hydrated sulfuric acid to elemental sulfur). The figure 0.01 in the equation is to adjust values in percent (%) to fractional values. The results of this estimate are consistent with the results from Fleischer et al. (1998), who tested particulate emissions using a nominally 1.5% sulfur fuel oil and found 40 – 60% of the particulate was due to sulfate and water absorbed by the sulfate and at rates exceeding 1 g/kW-hr indicating high emissions levels in general. The method described in equation 1 results in 0.81 and 0.75 g/kW-hr particulate

emission rates for medium and slow speed engines burning 2.4% sulfur fuel, close to the IVL average PM emission rate for these two engine types.

In recent public comments, ARB (2005) indicated that it was using a higher PM emission factor generated in ENVIRON (2002) and shown in the equations below. This rate matched one reported (ARB, 2005) data point from recent emissions data collected on-board a vessel. The emissions rate in ENVIRON was derived from in-use data available through 2000, but primarily available only in units of emission per unit of fuel consumed. The measurement of pollutants compared to fuel consumption is generally easier to perform because the emission rate is compared to the sum of all carbon species (most of it in the form of CO2) converted to fuel consumption using the hydrogen to carbon ratio of the fuel and other components such as sulfur. However, the data used to generate this relationship was derived from one source (Lloyds, 1995) and exhibited a dramatic nonlinear relationship with sulfur (especially significant above 2.5% sulfur) contrary to the conventional wisdom of the effect on PM emissions of fuel sulfur.

PM (kg/tonne of fuel) = 0.9016 x exp[0.7238 x (fuel sulfur in %)]
PM (g/kW-hr) = 1.7 (at fuel consumption rate of 219 g/kW-hr and 3% sulfur fuel)

There remains considerable uncertainty about the particulate emissions rates, especially for engines using high sulfur fuels. The IVL (2004) and ENTEC (2002) estimates indicate that the authors consider the uncertainty in the PM-10 emission rates to be in excess of 50%. This may stem from the method of collection, filter handling, or other factors associated with the hygroscopic nature of the particulate formed from diesel engines burning high sulfur fuels. The particulate emissions rates and sulfur relationship used for this work were not intended to be the final word on the subject, but provide a reasonable range of estimates consistent with the best understanding at this time.

Another engine type found is the gas turbine, of the kind usually manufactured by General Electric, Pratt and Whitney, or Rolls Royce. It is often found on tactical military ships and occasionally on other diesel-electric drive vessels such as cruise ships. The emissions data available for these types of engines is shown in Table 4-5. While the ETC (1997) emission data were similar to Cooper (2001), the fuel consumption rates measured by ETC (1997) were extraordinarily high. Gas turbines typically use lower sulfur (<0.2% sulfur) fuels, which are reflected in the lower PM emission rates. However, the CO_2 emissions and fuel costs for turbines can be higher because the turbines are less efficient (consume 40% more than a diesel engine) and the fuel costs are much higher.

Table 4-5. Gas turbine engines.

Engine/Boiler Type	BSFC (g/kW-hr)	NOx (g/kW-hr)	HC (g/kW-hr)	CO (g/kW-hr)	PM (g/kW-hr)
Cooper (2001)	294	6.0	0.07	0.09	0.007
ETC (1997)	446	6.5	0.06	0.59	NA

4.3 2004 Transit and Berthing Auxiliary Engine Emission Estimates

The total transit and berthing emissions for the cruise ships calling at the Port of San Francisco were estimated in accordance to similar work (POSF, 2001). The scope of the transit emissions analysis includes emissions within 12.5 nautical miles of the Golden Gate where the Harbor

Pilots board and leave vessels, as shown in Figure 4-1. This analysis follows the basic methodology defined by other studies to describe vessel activity (Arcadis, 1999, ENVIRON 2002, and Starcrest, 2004.) In those studies, four different modes (cruise, reduced speed zone, maneuvering, and hotelling) of vessel operations were defined. However, for this study, the cruise mode was not estimated because it occurs outside of the 12.5-mile limit as defined for this study.

Figure 4-1. Schematic map of study area.

According to the San Francisco Bar Pilots (SFBP, 2005), the reduced speed zone mode occurs between when the pilots board and the Golden Gate Bridge. The pilots board and leave vessels at speeds of 10 knots approximately 12.5 nautical miles from the Golden Gate Bridge, but the period of slow down to pick up the pilots is brief, lasting approximately 10 minutes. Once the pilots are on board, the vessels accelerate but do not exceed the speed limit of 15 knots by the time the vessel passes Mile Rock (see Figure 4-1). Therefore, an average speed of 13.5 knots was projected by the SFBP (2005) and used as the average speed for this period.

The pilot (SFBP, 2005) also concurred with POSF (2001) that the maneuvering mode lasts approximately 30 minutes in and out of port between the docks and the Golden Gate Bridge.

The approach used to estimate emissions from auxiliary power demands used the following equation. The time in mode was determined from all vessels from the distance and speed for the precautionary zone and the estimated or average time for the maneuvering and berthing/hotelling modes. The load in mode was determined from the surveys of the four sample vessels adjusted up for transit modes to reflect higher in-use loads when guests are on-board the vessels. Emission rates account for the latest estimates in emission factors accounting for the engine type (diesel or gas turbine) and fuel type (sulfur level).

Emissions = (Time in mode) x (Load in mode) x (Emission rate)

The time in mode was defined for the three modes in this study using the available data and estimates. The precautionary zone mode time was defined by the SFBP (2005) as approximately 55 minutes and, for inbound vessels, encompasses the time when the vessels drop from the service speed in cruise mode in order to pick up the pilots and continue toward port. The outbound mode in the same spatial region was assumed to be equivalent to the inbound trip. The maneuvering time for both in and outbound trips was estimated as 30 minutes by the SFBP (2005). The berthing time was derived from the average of actual time in berth for calls made in 2004 (and estimated for the DAWN PRINCESS in 2005) and are shown in Table 4-6.

Table 4-6. Vessel calls and average berthing (hotelling) time for 2004.[1, 2]

Vessel ID	Vessel Name	Call	Avg. Berth Time/Call
9103996	**DAWN PRINCESS[1]**	**12**	**10.4**
9106302	**MERCURY**	**17**	**10.0**
8521232	**REGAL PRINCESS**	**12**	**9.8**
8806204	**CRYSTAL HARMONY**	**11**	**9.9**
928931 CG	YORKTOWN CLIPPER	9	20.0
9192167	SILVER SHADOW	5	19.0
9128532	NORWEGIAN SKY	3	25.3
9228186	SAPPHIRE PRINCESS	7	9.9
9192387	SUMMIT	3	11.3
6810627	MAXIM GORKIY	1	29.0
9156515	VOLENDAM	2	10.0
9229659	CORAL PRINCESS	2	9.5
9195195	RADIANCE OF THE SEAS	1	17.0
9218131	NORWEGIAN SUN	1	15.0
9210139	SEVEN SEAS MARINER	1	14.0
8210986	SUN PRINCESS	2	7.0
9195157	NORWEGIAN STAR	1	13.0
9116876	VISION OF THE SEAS	1	11.0
9188037	AMSTERDAM	1	9.0
9228198	DIAMOND PRINCESS	1	9.0
9221281	OOSTERDAM	1	6.5
9141065	NORWEGIAN SPIRIT (ex-SuperStar Leo)	1	5.0

[1] DAWN PRINCESS did not call in 2004, and values in the table were based on the 2005 port call data.
[2] Those vessels in **bold** were selected for further evaluation of shoreside power.

The auxiliary load on the vessel was provided from surveys of the four subject vessels in this work (DAWN PRINCESS, MERCURY, REGAL PRINCESS, and CRYSTAL HARMONY). For other vessels calling in 2004, most were estimated with the average load of the four vessels where specific data was available. The average load was used because there was a weak correlation between gross tonnage and auxiliary load among the four survey vessels. Though some of the larger vessels, for example the SAPPHIRE PRINCESS, may be underestimated here;, this vessel was replaced in 2005 with a smaller one (DAWN PRINCESS). Three vessels were significantly smaller than the survey vessels and the load was adjusted to account for smaller vessel size. Acknowledging that we note a weak correlation with gross tonnage, the load for the MAXIM GORKIY and SILVER SHADOW was assumed to be half that of the CRYSTAL HARMONY based on an approximate ratio of gross tonnage. The YORKTOWN

CLIPPER was a significantly smaller vessel, so a load of 64% of the installed power was assumed. The estimated average auxiliary engine loads at berth are shown in Table 4-7.

Table 4-7. Operator provided or estimated auxiliary load for cruise ships.

Vessel Name	Gross Tonnage	In Berth Auxiliary Load (kW)
AMSTERDAM	61,000	7,250
CORAL PRINCESS	91,627	7,250
CRYSTAL HARMONY	**49,400**	**6,000**
DIAMOND PRINCESS	113,000	7,250
MAXIM GORKIY	24,981	3,000
MERCURY	**77,713**	**9,500**
NORWEGIAN SKY	77,104	7,250
NORWEGIAN SPIRIT (ex-SuperStar Leo)	75,338	7,250
NORWEGIAN STAR	91,740	7,250
NORWEGIAN SUN	77,104	7,250
OOSTERDAM	81,769	7,250
RADIANCE OF THE SEAS	90,090	7,250
REGAL PRINCESS	**69,845**	**6,700**
SAPPHIRE PRINCESS	113,000	7,250
SEVEN SEAS MARINER	48,015	7,250
SILVER SHADOW	28,258	3,000
SUMMIT	91,000	7,250
SUN PRINCESS	77,499	7,250
VISION OF THE SEAS	78,491	7,250
VOLENDAM	63,000	7,250
YORKTOWN CLIPPER	2,354	1,506
DAWN PRINCESS	**77,499**	**6,800**

Notes:
The auxiliary load for those vessels in **bold** were provided by the operators and were subjected to further evaluation of shoreside power. The other vessels were estimated based on gross tonnage and average load for the four selected vessels or reported installed power for the YORKTOWN CLIPPER.

For transit modes (precautionary zone and maneuvering modes), the berthing/hotelling auxiliary loads were scaled up by 25% as estimated by Starcrest (2004). Presumably, the higher auxiliary loads during transit are because the vessels are now fully loaded with passengers demanding higher air conditioning, lights, and other electric loads.

Another important aspect with regard to the emission rates estimates is the engine and fuel type used for auxiliary and propulsion power. The engine types found on these vessels include primarily large (EPA categorized Category 3) medium speed and gas turbines and are shown in Table 4-8.

Because nearly all the vessels that call at the Port are designed for diesel-electric power where there is no distinction between auxiliary and propulsion power, one engine type was used as the auxiliary engine type. Exceptions to this include the MERCURY, which has separate propulsion and auxiliary engines. However the auxiliary engines on the MERCURY are similar in design to other vessels' propulsion/auxiliary engines. Other exceptions include the MAXIM GORKIY and

the SILVER SHADOW, but specific auxiliary engine data were unavailable in Lloyds, so these vessels were assumed to be similar to most other vessels.

Table 4-8. Vessel auxiliary engine types.

Vessel	Engine Type
AMSTERDAM	Category 3 Medium Speed
CORAL PRINCESS	Category 3 Medium Speed with Turbine
CRYSTAL HARMONY	**Category 3 Medium Speed**
DIAMOND PRINCESS	Category 3 Medium Speed with Turbine
MAXIM GORKIY	Category 3 Medium Speed[1]
MERCURY	**Category 3 Medium Speed**
NORWEGIAN SKY	Category 3 Medium Speed
NORWEGIAN SPIRIT (ex-SuperStar Leo)	Category 3 Medium Speed
NORWEGIAN STAR	Category 3 Medium Speed
NORWEGIAN SUN	Category 3 Medium Speed
OOSTERDAM	Category 3 Medium Speed with Partial Turbine
RADIANCE OF THE SEAS	Gas Turbine
REGAL PRINCESS	**Category 3 Medium Speed**
SAPPHIRE PRINCESS	Category 3 Medium Speed with Turbine
SEVEN SEAS MARINER	Category 3 Medium Speed
SILVER SHADOW	Category 3 Medium Speed
SUMMIT	Gas Turbine
SUN PRINCESS	Category 3 Medium Speed
VISION OF THE SEAS	Category 3 Medium Speed
VOLENDAM	Category 3 Medium Speed
YORKTOWN CLIPPER	Category 2 Medium Speed
DAWN PRINCESS	**Category 3 Medium Speed**

[1] This vessel is listed by Lloyds as a steam turbine and geared drive but a Category 3 medium speed engine is more common and more likely to be used by vessels calling in the future.

Also, vessels designed with diesel-electric power have multiple (at least three and usually more) engines that produce power to the electric generators. This permits the vessels' engineers to scale the individual engine loads to reduce, or, as assumed in this work, eliminate engines operating at inefficient low loads. Therefore, no adjustment was made for low load conditions as described in the Port of Los Angeles study (Starcrest, 2004).

More important was to incorporate vessels with gas turbines installed on board. Two vessels (RADIANCE OF THE SEAS and SUMMIT) were nearly exclusively (except for emergency power) powered by gas turbines. A few other ships had both turbine and diesel power available, but it was unclear how and when the turbines were used. Most vessels with turbines were assumed to be half powered by turbines with one vessel (OOSTERDAM) assumed to be one third powered by turbines based on the relative installed power. However, it is possible that the turbines may be mainly used near port. The fuel used for gas turbines was assumed to be equivalent to jet fuel at 0.2% sulfur to calculate SOx and PM emissions rates.

Besides the lower sulfur use in turbines, the survey data for the REGAL PRINCESS indicated use of 1.5% sulfur fuel (in Alaska only) and 0.2% lighter fuel for the CRYSTAL HARMONY. Because the YORKTOWN CLIPPER is a much smaller vessel, of similar gross tonnage to tugs,

it is likely to use low sulfur fuel, but no adjustment to low sulfur was made for the YORKTOWN CLIPPER. All other vessels (except those with turbines and the CRYSTAL HARMONY) were assumed to use 2.5% sulfur fuel, similar to the reported estimates for the DAWN PRINCESS and MERCURY.

From these load and time estimates combined with emission factors specific to the engine and fuel type, emissions were estimated by mode and summed to estimate total emissions for auxiliary loads for these vessels. The emissions estimates for 2004, and those expected in 2005 for the DAWN PRINCESS, are shown in Table 4-9 for annual totals and Table 4-10 per port call. The berthing/hotelling emissions shown in Table 4-9 are higher than those for the emission reductions from shoreside power, which is discussed later in this section, because those estimates subtracted a portion of the time at berth when the electrical loads were transferring to shoreside power. These results show that the berthing-only emissions were between 60 to 90% of the total berthing and transit emissions from auxiliary engines.

Table 4-9 also shows that the MERCURY, REGAL PRINCESS, and CRYSTAL HARMONY contributed to more than 50% of the 2004 NOx, PM and SOx emissions estimated for all port call data. If substituting the SAPPHIRE PRINCESS' emissions with DAWN PRINCESS' emissions, the selected four cruise ships contributed to more than 60% of the NOx, PM and SOx emissions estimated for all 2004 port call data. Also, the PM and SOx emissions from CRYSTAL HARMONY were significantly lower than other vessels with similar sizes and activities because it used low sulfur (0.2%) lighter fuel.

Table 4-9. 2004 annual auxiliary power transit and berthing emission estimates.

			Berthing Only (tons/year)						Transit Only (tons/year)					
Vessel ID	**Name**	**Calls**	**HC**	**CO**	**NOx**	**PM**	**SOx**	**Fuel Cons.**	**HC**	**CO**	**NOx**	**PM**	**SOx**	**Fuel Cons.**
9103996	**DAWN PRINCESS[1]**	**12**	0.28	0.47	13.12	0.85	9.85	201	0.10	0.16	4.49	0.29	3.37	69
9106302	**MERCURY**	**17**	0.53	0.89	24.92	1.62	18.71	383	0.19	0.32	8.88	0.58	6.67	136
8521232	**REGAL PRINCESS**	**12**	0.26	0.44	12.20	0.79	9.16	187	0.09	0.16	4.42	0.29	3.32	68
8806204	**CRYSTAL HARMONY**	**11**	0.22	0.36	9.52	0.10	0.59	151	0.08	0.13	3.42	0.03	0.21	54
9192167	SILVER SHADOW	5	0.09	0.16	4.40	0.29	3.30	64	0.02	0.03	0.83	0.05	0.62	11
928931 CG	YORKTOWN CLIPPER	9	0.06	0.33	4.18	0.24	3.14	68	0.01	0.06	0.75	0.04	0.56	13
9128532	NORWEGIAN SKY	3	0.18	0.30	8.50	0.55	6.38	131	0.03	0.04	1.20	0.08	0.90	18
9228186	SAPPHIRE PRINCESS	7	0.10	0.16	5.51	0.25	3.70	140	0.04	0.06	1.99	0.09	1.34	51
9192387	SUMMIT	3	0.02	0.02	1.63	0.00	0.31	80	0.01	0.01	0.51	0.00	0.10	25
6810627	MAXIM GORKIY	1	0.03	0.05	1.34	0.09	1.01	21	0.00	0.01	0.17	0.01	0.12	3
9156515	VOLENDAM	2	0.05	0.08	2.24	0.15	1.68	34	0.02	0.03	0.80	0.05	0.60	12
9229659	CORAL PRINCESS	2	0.03	0.04	1.52	0.07	1.02	39	0.01	0.02	0.57	0.03	0.38	15
9195195	RADIANCE OF THE SEAS	1	0.01	0.01	0.81	0.00	0.16	40	0.00	0.00	0.17	0.00	0.03	8
9218131	NORWEGIAN SUN	1	0.04	0.06	1.68	0.11	1.26	26	0.01	0.01	0.40	0.03	0.30	6
9210139	SEVEN SEAS MARINER	1	0.03	0.06	1.57	0.10	1.18	24	0.01	0.01	0.40	0.03	0.30	6
8210986	SUN PRINCESS	2	0.03	0.06	1.57	0.10	1.18	24	0.02	0.03	0.80	0.05	0.60	12
9195157	NORWEGIAN STAR	1	0.03	0.05	1.45	0.09	1.09	22	0.01	0.01	0.40	0.03	0.30	6

Vessel ID	Name	Calls	Berthing Only (tons/year)						Transit Only (tons/year)					
			HC	CO	NOx	PM	SOx	Fuel Cons.	HC	CO	NOx	PM	SOx	Fuel Cons.
	STAR													
9116876	VISION OF THE SEAS	1	0.03	0.04	1.23	0.08	0.92	19	0.01	0.01	0.40	0.03	0.30	6
9188037	AMSTERDAM	1	0.02	0.04	1.01	0.07	0.76	15	0.01	0.01	0.40	0.03	0.30	6
9228198	DIAMOND PRINCESS	1	0.01	0.02	0.72	0.03	0.48	18	0.01	0.01	0.28	0.01	0.19	7
9221281	OOSTERDAM	1	0.01	0.02	0.59	0.02	0.42	13	0.01	0.01	0.32	0.01	0.23	7
9141065	NORWEGIAN SPIRIT	1	0.01	0.02	0.56	0.04	0.42	9	0.01	0.01	0.40	0.03	0.30	6

[1] Dawn Princess did not call in 2004; values were estimated based on 2005 port call data.

Table 4-10. 2004 per call auxiliary power emission estimates.

Vessel ID	Name	Berthing Only (tons per call)						Transit Only (tons per call)					
		HC	CO	NOx	PM	SOx	Fuel Cons.	HC	CO	NOx	PM	SOx	Fuel Cons.
9103996	**DAWN PRINCESS[1]**	0.02	0.04	1.09	0.07	0.82	17	0.01	0.01	0.37	0.02	0.28	6
9106302	**MERCURY**	0.03	0.05	1.47	0.10	1.10	23	0.01	0.02	0.52	0.03	0.39	8
8521232	**REGAL PRINCESS**	0.02	0.04	1.02	0.07	0.76	16	0.01	0.01	0.37	0.02	0.28	6
8806204	**CRYSTAL HARMONY**	0.02	0.03	0.87	0.01	0.05	14	0.01	0.01	0.31	0.00	0.02	5
928931 CG	YORKTOWN CLIPPER	0.01	0.04	0.46	0.03	0.35	7	0.00	0.01	0.08	0.00	0.06	1
9192167	SILVER SHADOW	0.02	0.03	0.88	0.06	0.66	14	0.00	0.01	0.17	0.01	0.12	3
9128532	NORWEGIAN SKY	0.06	0.10	2.83	0.18	2.13	44	0.01	0.01	0.40	0.03	0.30	6
9228186	SAPPHIRE PRINCESS	0.01	0.02	0.79	0.04	0.53	20	0.01	0.01	0.28	0.01	0.19	7
9192387	SUMMIT	0.01	0.01	0.54	0.00	0.10	27	0.00	0.00	0.17	0.00	0.03	8
6810627	MAXIM GORKIY	0.03	0.05	1.34	0.09	1.01	21	0.00	0.01	0.17	0.01	0.12	3
9156515	VOLENDAM	0.02	0.04	1.12	0.07	0.84	17	0.01	0.01	0.40	0.03	0.30	6
9229659	CORAL PRINCESS	0.01	0.02	0.76	0.03	0.51	19	0.01	0.01	0.28	0.01	0.19	7
9195195	RADIANCE OF THE SEAS	0.01	0.01	0.81	0.00	0.16	40	0.00	0.00	0.17	0.00	0.03	8
9218131	NORWEGIAN SUN	0.04	0.06	1.68	0.11	1.26	26	0.01	0.01	0.40	0.03	0.30	6
9210139	SEVEN SEAS MARINER	0.03	0.06	1.57	0.10	1.18	24	0.01	0.01	0.40	0.03	0.30	6
8210986	SUN PRINCESS	0.02	0.03	0.78	0.05	0.59	12	0.01	0.01	0.40	0.03	0.30	6
9195157	NORWEGIAN STAR	0.03	0.05	1.45	0.09	1.09	22	0.01	0.01	0.40	0.03	0.30	6
9116876	VISION OF THE SEAS	0.03	0.04	1.23	0.08	0.92	19	0.01	0.01	0.40	0.03	0.30	6
9188037	AMSTERDAM	0.02	0.04	1.01	0.07	0.76	15	0.01	0.01	0.40	0.03	0.30	6
9228198	DIAMOND PRINCESS	0.01	0.02	0.72	0.03	0.48	18	0.01	0.01	0.28	0.01	0.19	7
9221281	OOSTERDAM	0.01	0.02	0.59	0.02	0.42	13	0.01	0.01	0.32	0.01	0.23	7
9141065	NORWEGIAN SPIRIT	0.01	0.02	0.56	0.04	0.42	9	0.01	0.01	0.40	0.03	0.30	6

[1] Dawn Princess did not call in 2004; values were estimated based on 2005 port call data.

4.4 Shoreside Power Emission Estimates

This section describes emission estimates for initiatives to reduce emissions through the use of shoreside power rather than running on-board ship service diesel generators while vessels are berthed. The emissions calculated here were for the diesel generators currently used by vessels while at dock.

Shoreside emissions per port call were estimated as a function of the time at dock (hours), the generator power load (kW), and the pollutant specific emission factor per kW-hr. The emission factors used in this study were discussed in the previous section. Annual emissions are for all port calls throughout the year, so the number of calls per year is multiplied by the average emissions per call. Ships with a large number of calls, long times at dock, and large electrical loads are more likely to produce higher emissions while at a dock.

The shoreside power emissions were estimated using the following equations.

Emissions per port call = (Avg. Berthing Time – Connection+Disconnecting Time) x (Avg. Load, kW) x (Emission Factor, g/kW-hr)

Annual Emissions = (Emissions per port call) x (Annual Calls)

Emissions of PM and SOx depend on the fuel sulfur level used in the generator engines. As shown previously in Table 3-1, all four selected cruise ships, except CRYSTAL HARMONY, use heavy fuel oil, IFO-380, with an average sulfur level of 2.5%. The CRYSTAL HARMONY cruise ship uses a light diesel fuel, MDO, with an average sulfur level of 0.2%. It should be noted that the REGAL PRINCESS uses IFO-180 with an average sulfur level of 1.5% in Alaska to comply with the visible smoke restriction but this sulfur level was not used in this study.

Applying the emission factors to the ship call activity estimates provided an estimate of the emissions per port call. Annual emissions were then calculated based upon the number of calls expected over a 12-month period using the 2004 port call data for all vessels, except the DAWN PRINCESS, which was calculated based on the 2005 port call data. One adjustment was that two hours (one hour on each end of each port call) were subtracted from the average berthing time to account for the time to transition to and from shoreside power. The emission results are provided here both as per port call and as an annual average to allow comparison of emission estimates for similar vessels berthed at the Port or other ports.

Table 4-11 shows the annual fuel consumption and emission estimates for shoreside power for the selected cruise ships based on the 2004 port call data, except DAWN PRINCESS, which was based on the projected 2005 port call data. Table 4-12 shows the fuel consumption and emission estimates per port call for shoreside power for the selected cruise ships.

Table 4-11. Annual shoreside power fuel consumption and emission estimates for the selected candidate cruise ships.

Vessel[1]	Fuel Cons. (tons/yr)	Shoreside Power Emission Estimates (tons/yr)				
		HC	CO	NOx	PM	SOx
CELEBRITY MERCURY	306	0.43	0.71	19.94	1.30	14.97
CRYSTAL HARMONY	121	0.17	0.29	7.60	0.08	0.47
DAWN PRINCESS	163	0.23	0.38	10.60	0.69	7.96
REGAL PRINCESS	149	0.21	0.35	9.72	0.63	7.30

[1] Calculations were based on 2004 port call data for all vessels, except DAWN PRINCESS, which was based on 2005 port call data.

Table 4-12. Shoreside power fuel consumption and emission estimates per port call for the selected candidate cruise ships.

Vessel[1]	Fuel Cons. (tons/call)	Shoreside Power Emission Estimates (tons/call)				
		HC	CO	NOx	PM	SOx
CELEBRITY MERCURY	18	0.03	0.04	1.17	0.08	0.88
CRYSTAL HARMONY	11	0.02	0.03	0.69	0.01	0.04
DAWN PRINCESS	14	0.02	0.03	0.88	0.06	0.66
REGAL PRINCESS	12	0.02	0.03	0.81	0.05	0.61

[1] Calculations were based on 2004 port call data for all vessels, except DAWN PRINCESS, which was based on 2005 port call data.

4.5 Net Shoreside Power Emission Reduction Estimates

The use of shoreside power would increase emissions from power plants in the region. Therefore, it was necessary to account for the emissions associated with shoreside power generation. In the Port of Long Beach Study, the emissions associated with shoreside power generation were derived from AP-42 for a typical natural gas steam power generation with selective catalytic reduction (SCR) but no CO catalyst were used (ENVIRON, 2004). For consistency with the ARB's state-wide shoreside power study, average powerplant emission factors based on California power mix provided by ARB were used in this study (Zeller, 2005-1.) These emission factors are shown in Table 4-13.

Table 4-13. Powerplant emission factors.

Air Pollutant	PoLB Study's Emission Factors	ARB's Shoreside Power study's Emission Factors
	lb/MW-hr	lb/MW-hr
NO_X	0.11	0.191
CO	0.96	0.257
PM (assumed PM_{10})	0.087	0.029
SO_x	0.0069	0.0149
VOC	0.063	0.035

Table 4-14 presents the annual and per port call net shoreside power emission reduction estimates, after subtracting associated shoreside power generating emissions (i.e. powerplant emissions), as well as percent emission reductions from berthing emissions with the use of shoreside power. The annual berthing emissions are also included in Table 4-14 for references.

Table 4-14. Berthing emissions, net shoreside power emission reduction estimates, and percent emission reductions for the selected candidate cruise ships.

Vessel[1]	Berthing Emission Estimates (tons/yr)				
	HC	CO	NOx	PM	SOx
CELEBRITY MERCURY	0.53	0.89	24.92	1.62	18.71
CRYSTAL HARMONY	0.22	0.36	9.52	0.10	0.59
DAWN PRINCESS	0.28	0.47	13.12	0.85	9.85
REGAL PRINCESS	0.26	0.44	12.20	0.79	9.16
Vessel[1]	**Net Shoreside Emission Reduction Estimates (tons/yr)**				
	HC	**CO**	**NOx**	**PM**	**SOx**
CELEBRITY MERCURY	0.40	0.55	19.81	1.28	14.96
CRYSTAL HARMONY	0.16	0.22	7.55	0.07	0.47
DAWN PRINCESS	0.22	0.29	10.53	0.68	7.95
REGAL PRINCESS	0.20	0.27	9.66	0.62	7.29
Vessel[1]	**Berthing Emission Estimates (tons/call)**				
	HC	**CO**	**NOx**	**PM**	**SOx**
CELEBRITY MERCURY	0.025	0.042	1.173	0.076	0.880
CRYSTAL HARMONY	0.016	0.026	0.690	0.007	0.043
DAWN PRINCESS	0.019	0.032	0.883	0.057	0.663
REGAL PRINCESS	0.017	0.029	0.810	0.053	0.608
Vessel[1]	**Net Shoreside Emission Reduction Estimates (tons/call)**				
	HC	**CO**	**NOx**	**PM**	**SOx**
CELEBRITY MERCURY	0.024	0.032	1.166	0.075	0.880
CRYSTAL HARMONY	0.015	0.020	0.686	0.006	0.043
DAWN PRINCESS	0.018	0.024	0.878	0.057	0.663
REGAL PRINCESS	0.016	0.022	0.805	0.052	0.608
Vessel[1]	**Shoreside Emission Reductions from Berthing Emissions (%)**				
	HC	**CO**	**NOx**	**PM**	**SOx**
CELEBRITY MERCURY	76%	61%	80%	79%	80%
CRYSTAL HARMONY	76%	61%	79%	72%	79%
DAWN PRINCESS	77%	62%	80%	80%	81%
REGAL PRINCESS	75%	61%	79%	79%	80%

[1] Calculations were based on 2004 port call data for all vessels, except DAWN PRINCESS, which was based on 2005 port call data.

4.6 Projected 2020 Shoreside Power Emission Estimates

The Port of San Francisco estimated that the number of port calls would steadily increase to 107 in 2020 for the new cruise ship terminal (PoSF, 2001). In order to determine a "best case" scenario, it was necessary to project the 2020 hotelling emissions based on these 107 projected port calls. Since it is impossible to determine the future vessel fleet in 2020, it was necessary to estimate the average fleet hotelling emissions per call based on the 2004 port call data. This was achieved by averaging the per call emissions for the 2004 fleet weighted by their hotelling load, instead of simple averaging of the per call emissions. Simple averaging would underestimate the emissions if the most frequently called vessels were smaller vessels with lower hotelling load demands and visa versa. The 2004 load-weighted average per call emissions are shown in Table 4-15.

Table 4-15. 2004 load-weighted average per call berthing and transit emissions associated with auxiliary loads, and projected 2020 berthing and transit emissions.

2004 Load-Weighted Average											
Berthing Only (tons per call)						Transit Only (tons per call)					
HC	CO	NOx	PM	SOx	Fuel Cons.	HC	CO	NOx	PM	SOx	Fuel Cons.
0.03	0.04	1.26	0.07	0.87	23	0.007	0.011	0.331	0.019	0.225	6
Projected 2020 Fuel Consumption and Emissions based on 107 Port Calls											
Berthing Only (tons per year)						Transit Only (tons per year)					
HC	CO	NOx	PM	SOx	Fuel Cons.	HC	CO	NOx	PM	SOx	Fuel Cons.
2.76	4.59	134.70	7.72	92.66	2500	0.72	1.20	35.36	1.99	24.10	665

Figures 4-2 and 4-3 show the comparisons of 2004 and 2020 berthing and transit emissions, respectively. The total NOx and PM hotelling emissions were projected to increase by about 50% and 55% respectively from 2004 to 2020, assuming that there would be no reduction in cruise ship emissions – an assumption used in the DSEIR for the Cruise Ship Terminal Mixed-Used project (PoSF, 2001). However, depending on the pollutant types, about 60 to 80% of emission reductions can be achieved from the projected 2020 berthing emission estimates with the use of shoreside power.

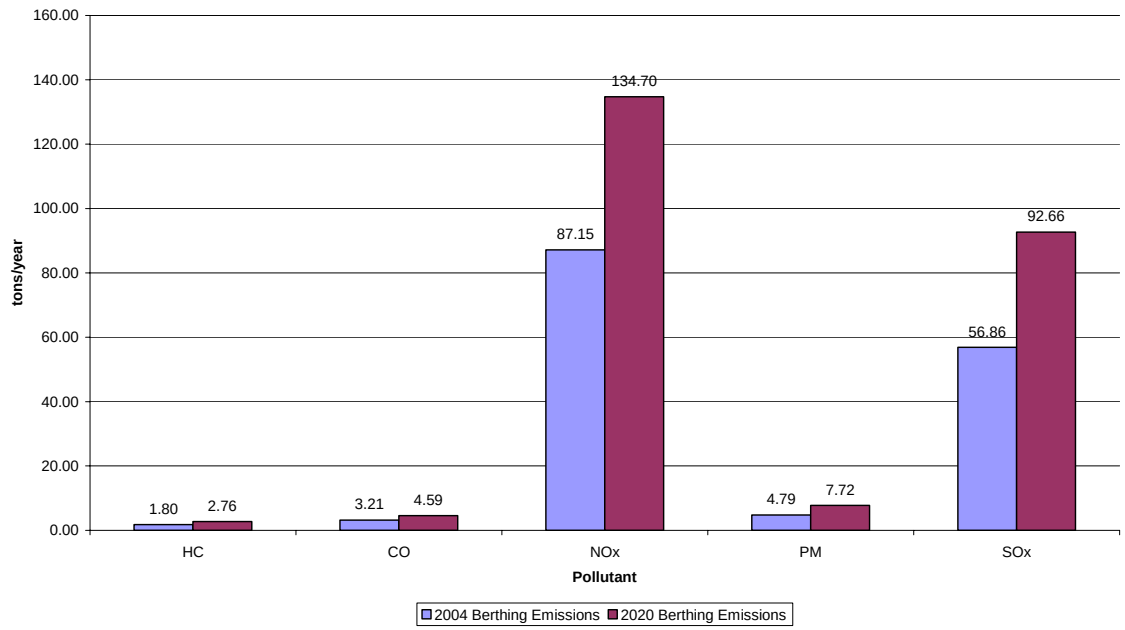

Figure 4-2. Comparison of 2004 and 2020 berthing emissions.

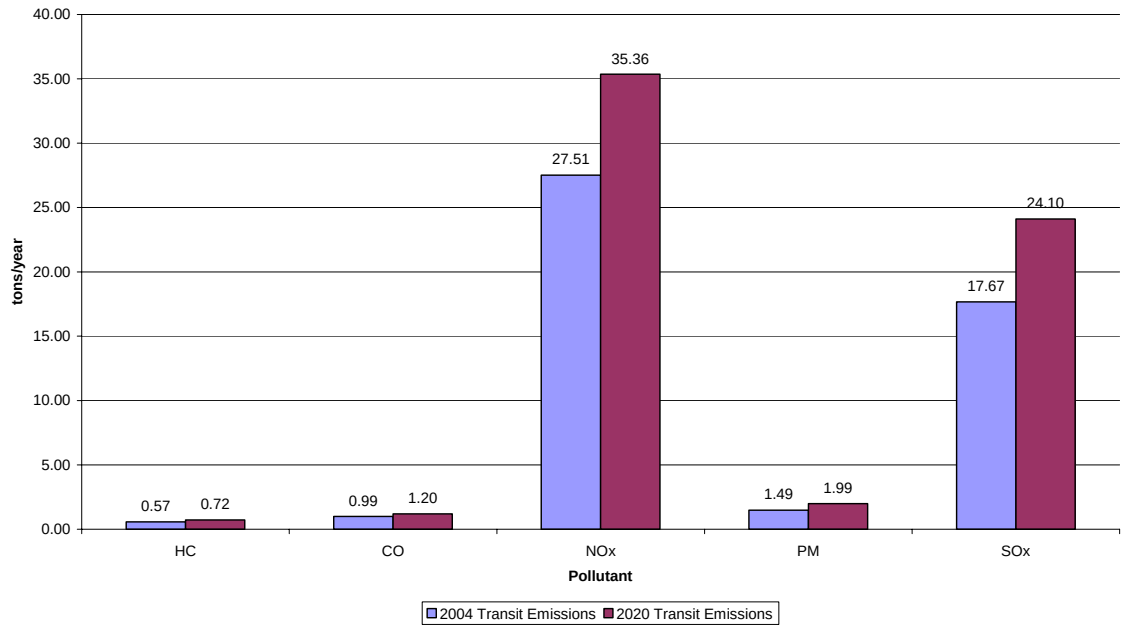

Figure 4-3. Comparison of 2004 and 2020 transit emissions.

5. CONCEPTUAL DESIGN OF A SHORESIDE POWER SYSTEM

This section discusses the infrastructure needs, conceptual design, and cost estimates of a shoreside power system for reducing hotelling emissions from cruise ships berthed at the Port, as well as potential shipside alterations and cost estimates on selected cruise ships to receive shoreside power. For background on shoreside power systems, we also briefly examine the design and cost estimates for the Princess Cruise Lines' shoreside power system in Juneau, Alaska[1].

5.1 Overview of the Juneau Shoreside Power System for Princess Cruise Lines

The first cruise ship shoreside power installation anywhere in the world was in Juneau, Alaska. On July 24, 2001, the DAWN PRINCESS operated completely on shore power for about 10 hours. By the 2002 cruise season, all five Princess Cruise ships serving Alaska were converted to use shore power when they moored in Juneau. The Juneau project was initiated in order to comply with the local stack emissions opacity standard. Shore power is supplied by Alaska Electric Light & Power (AEL&P), which had a surplus of local hydroelectric power. The Juneau shoreside power system provides both electric power and steam, using an electric boiler. It should be noted that even in dock, the ship's boilers are run in a low-fire mode to prevent excessive smoking on start up. Other cruise lines do not participate in shoreside power in Alaska.

Capital Costs –Princess Cruises provided $4.5 million for the Juneau project to supply both electricity and steam[2]. Of the $4.5 million, $2.5 million was spent on shoreside power infrastructure that supplies both electricity and steam[3] and $2.0 million was for shipboard alterations to four ships at $500,000 per ship inclusive of $150,000 for modification of on-board power management software to synchronize onboard power and shoreside power. Each ship was outfitted with a new door, an electrical connection cabinet and the necessary equipment to automatically connect the ship's electrical network to the local onshore electrical network. Each ship's technical office area on deck 4 was used as the point of entry for the power connection. A 4-meter by 2.5-meter steel bulkhead was installed between adjacent steel decks to provide the A-0 fire class condition required to connect to a high voltage (6.6 kV) power source. The Sun Class ships have four Sulzer 16ZAV40S engines driving four GEC generators delivering 6.6 kV, 3-phase, 60 Hz power. Each Sun Class ship was originally constructed with one spare 6.6 kV breaker on its switchboard. The cable connection on the ship is a traditional male/female plug and socket that was adapted from the American mining industry.

[1] Cruise ship shoreside power is also being examined for use in Long Beach, and is currently being installed for Princess Lines cruise ships in Seattle, Washington. The Seattle installation is probably the most similar to that which would be installed in San Francisco. See http://www.westcoastdiesel.org/files/outreach/Seattle%20Sept%2030th%20Fact%20Sheet%2003-11-05.pdf for more information.

[2] Princess News: SHORE POWER CONNECTION LAUNCHED FOR PRINCESS SHIPS *Innovative Program Demonstrates Company's Commitment to Local Concerns*, July 24, 2001.

[3] Steam is used for heating during port stays. Such is no the case in San Francisco and is thus not included in analysis of costs at the Port of San Francisco.

Operating Costs - Princess Cruises Sun Class ships require about 7 MW of power at 6.6 kV; the Grand Class requires 11 MW at berth. Princess Cruises estimated a cost of $4,000 to $5,000 per day for Sun Class vessels for hotelling power demand using hydroelectric power supplied by AEL&P, as compared to a cost of $3,500 per day to run the diesel engines while in port at Juneau.[4,5]

Operation - Electrical power is transmitted from a three-phase transformer onshore via four 3-inch diameter flexible cables that festoon to the ship. A special 135-foot long, 25-foot high gantry system was built into the dock to support the festooning equipment, connection cables, and plugs. This transmission equipment was designed to accommodate a 20-foot change in the tide level and to withstand 100 mile per hour winds. The Princess Cruise crew performs the cable connection and disconnection, but AEL&P personnel operate the shoreside substation. Pulling the cables aboard, connecting them to the ship controls, and beginning to run the ship on shoreside power takes approximately 20 to 30 minutes. The same amount of time is needed for disconnecting shoreside power. Process safety is addressed though personnel training and implementing process checklists.

The onboard power management system (PMS) software was modified to recognize the shoreside power supply as an additional (the 5th) onboard power-generating unit. The software synchronizes the onboard power with the onshore supplied power, adjusts the onboard voltage until it matches the onshore supply and then regulates the onboard frequency and phase until they match the onshore supply characteristics.

5.2 Electrical Power Infrastructure Conceptual Design at the Port of San Francisco

As discussed earlier, the four selected cruise ships used in this study (CRYSTAL HARMONY, CELEBRITY MERCURY, DAWN PRINCESS, and REGAL PRINCESS) all operate at 6.6 kV, 3-phase with normal load demands while at dock ranging from 6 MW to 9.5 MW. The DAWN PRINCESS is currently equipped for shoreside power with a point of entry in the hull at deck 4 (11.3 m above Baseline; at a draft of 8.3 m and a Mean Sea Level tide this would correlate with an elevation of approximately 13' MLLW, which correlates nearly to the elevation of the wharf deck). The remaining vessels have not been retrofitted for shoreside power, but responses provided by the ship operators indicated that the likely point of entry in the hull will be at deck 4 (10.4 m to 11.4 m above Baseline). The distance from aft perpendicular to the point of entry will be different for each vessel with a likely variation of approximately 30 m.

At the expected load demand (ranging from 6 MW to 9.5 MW) and operating voltage of 6.6 kV, two 500 MCM[6] cables will have to be brought on to the ship, plus a neutral electric cable and one ship to shore Supervisory Control and Data Acquisition (SCADA) Cable. If the distance

[4] As we note elsewhere in this report, arrangements are often made with local utilities and the affected port such that the cost of the electricity provided is modified in some fashion to be lower than otherwise prevailing rates. This is affected by the "interruptability" of the provided electricity, possible funding by the port, or other special provisions. It is beyond the scope of this report to characterize the nature of such arrangements in various applications of shoreside power. Suffice it to say that in each of the cases of Seattle, Juneau, and Long Beach, the cost of electricity for shoreside powering of ships has been a negotiated arrangement.

[5] See later sections of this report for the electricity rate structure assumed in this study.

[6] MCM is a terminology used to describe the size of the cables based on the electrical load to be served by such cables.

from the transformer to the point of connection on the vessel is increased substantially beyond 500 feet, the number of feeder cables may have to be increased from two to three or four cables.

5.3 Overview of Power Transmission/Distribution to the Ships

This study assumes that power will be supplied by PG&E and delivered to the terminal at 12 or 34.5 kV[7] (see Section 5.4). The high-voltage power would then be brought underground into the terminals and reduced to 6.6 kV at an on-terminal substation from whence it would be run to the wharf. For the purpose of this study, the use of cable reel towers, similar to those used in Juneau, was considered. The use of a work barge delivery concept as discussed in the Port of Long Beach Cold Ironing Feasibility study (ENVIRON, 2004) was rejected on the basis of anticipated permitting problems associated with the fill created by the semi-permanent mooring of the barge, and incompatibility of berthing the barge fore or aft of the vessel with the expected point of entry for the cold-ironing cables at mid-ships.

For the four selected cruise ships, the main power switchboard is located at deck 3, which is located very near the water line for all four vessels. These four vessels either have an existing hull penetration where the shore power cables can enter the ship or have the potential to add a hull penetration at either deck 3 or deck 4. The resulting range in location where the shoreside power will need to be provided to these vessels is approximately 30m (98') longitudinally and 5m (16') vertically. Locating the cable reel tower mid-range of the potential hull penetration point for these vessels will limit the cable run to approximately 15m (49') longitudinally.

5.4 Energy and Transmission Distribution to Terminals

<u>PG&E Transmission and Distribution System</u>

PG&E owns and operates the electrical transmission and distribution system within the City of San Francisco. As the franchise service provider, PG&E conducts periodic studies of the system capacity, demands, and modifications needed for both near- and long-term service needs. As a part of those ongoing efforts, PG&E has been preparing to shut down and remove the Hunters Point Power Station for several years. A new 115 kV feeder will be constructed between the Potrero Substation and the Hunters Point Substation as part of the overall system reconfiguration to accommodate the loss of the Hunters Point electric power plant. PG&E's Draft Mitigated Negative Declaration for the Hunters Point Substation to Potrero Substation Project states that PG&E is currently programming their system development and maintenance to meet total demand growth at the rate of about 15 MW per year. The possible demand placed on the system for a shoreside power system for cruise ships coupled with the new development of the terminal (about 15 MW total) would place additional demand growth on-line and will affect the load planning process[8].

[7] Terminology for this voltage is sometimes referred to as 12.5 kV. For consistency, we use 12 kV throughout this report.
[8] Since this is a feasibility study, many simplifying assumptions have been made. While these assumptions are clearly stated, and are considered by the authors to be reasonable for the purposes of this study, actual engineering design and related cost analyses will necessarily be carried out by stakeholders in this effort. It is expected that PG&E would provide such detailed shoreside infrastructure engineering and cost estimating (so-called, Engineering Feasibility Study, EFS) as the project progresses.

PG&E operates three substations within about 2 miles of the proposed project site. They are the Embarcadero, Mission, and Larkin Substations. PG&E serves the Embarcadero Substation with a 230 kV feeder from the Martin Substation located near the Cow Palace, about 5 miles south of the proposed project site. PG&E serves the Mission Substation with a 115 kV feeder also from the Martin Substation, but the line must first pass through the Potrero Substation. The Larkin Substation is served by 115 kV feeds from the Hunters Point and Potrero Substation. The Potrero, Mission, and Larkin Substations appear to be configured as a loop system, whereas the Embarcadero Substation has no loop connections with the other substations that serve San Francisco. The Embarcadero, Mission, and other substations may be able to provide power at voltages 12, 34.5, 115, or possibly 230 kV. Figure 5-1 (an exhibit prepared by the California Energy Commission) illustrates the local transmission system.

Possible Distribution Routes

The limited scope and schedule for this study precluded identifying the most likely source of power to meet the ship hotelling and terminal needs. However, three candidate power sources and routes have been identified using existing and possible new distribution or transmission infrastructure (see Figure 5-2). The first option would be for PG&E to provide an underground high voltage service from an existing feeder located within a few blocks of the cruise terminal. The second option would be for PG&E to provide an underground high voltage feeder from the Embarcadero Substation located at the intersection of Folsom and Fremont Streets; this source is the current design option for the developer for the new cruise ship terminal to supply the terminal load demands. The PG&E Mission Substation located at the intersection of Mission and 8th Streets appears to be the least desirable choice. Although the Larkin Substation is located a similar distance from the proposed project site, it is probably not desirable to cross Market Street with new electrical infrastructure for the proposed project. Therefore, the Larkin Substation is not identified as a candidate power tap location.

PG&E has yet to perform an Engineering Feasibility Study (ESF) for each of these options. The ESF would identify the service options PG&E's system can support and provide cost estimates for each option at an accuracy level of ±25%. Also, this study does not take into account any costs of facilities needed to provide service to the terminal itself. The actual cost of facilities necessary to provide shore power to the ships would be the combined cost electrical service facilities required to serve the terminal and shore power less the cost of the costs of facilities to serve the terminal only.

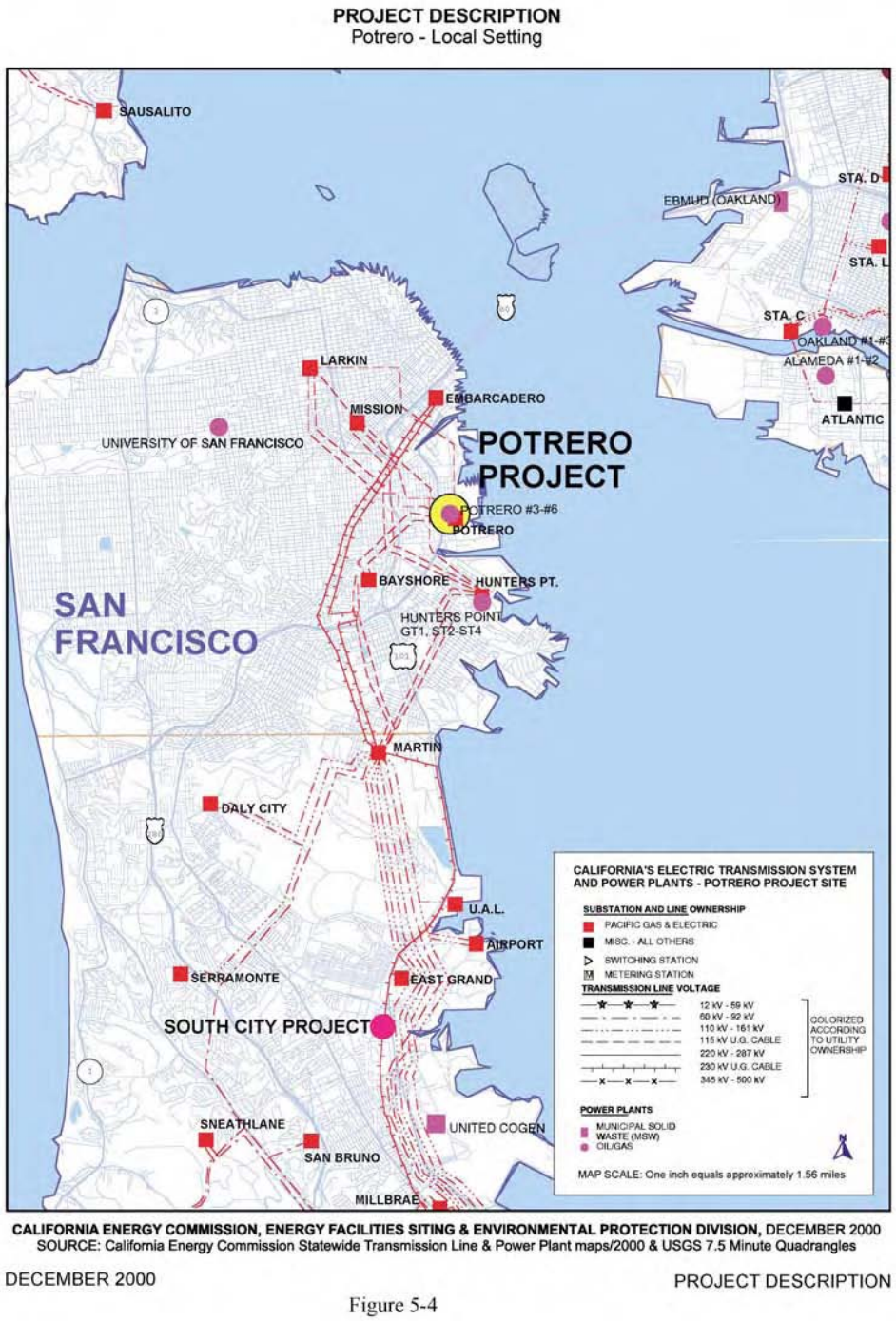

Figure 5-1. A schematic illustrating the PG&E substations within the local electric transmission system.

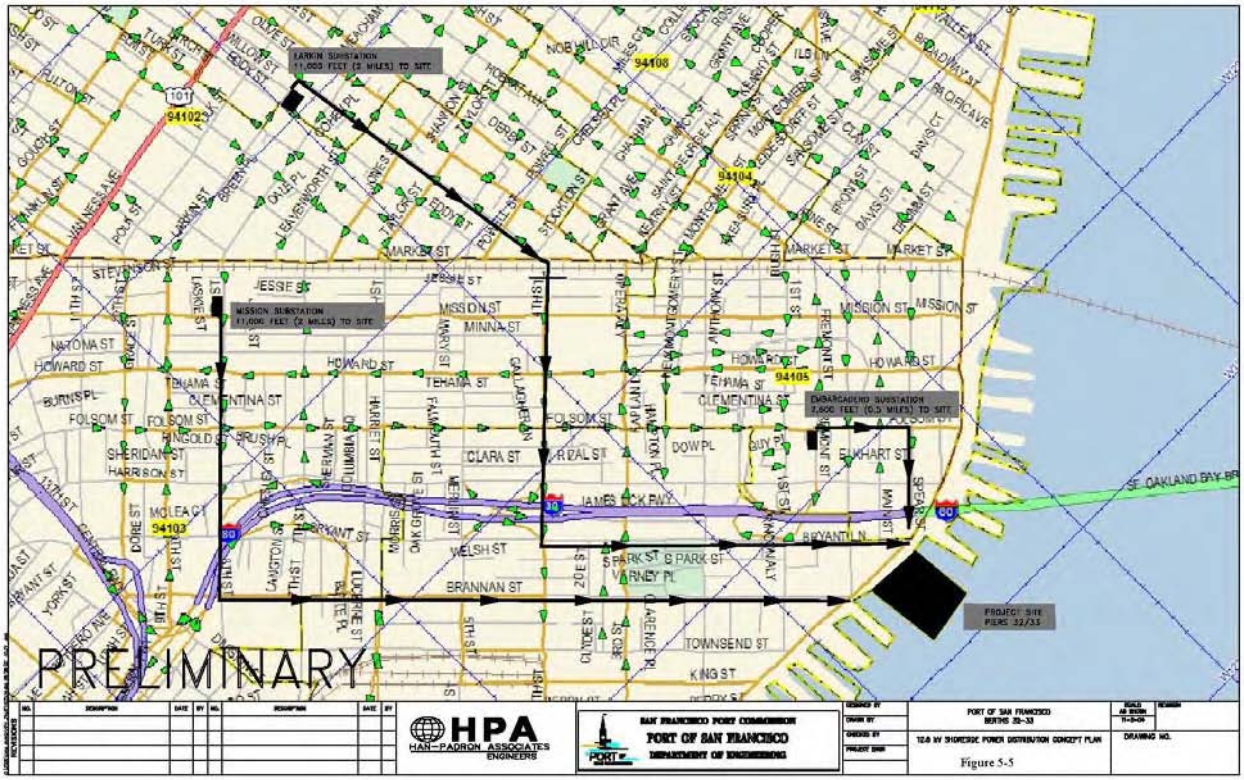

Figure 5-2. A schematic illustrating the three candidate power sources and routes for a distribution and transmission infrastructure for shoreside power.

While overhead service is not an option in this area[9], costs for overhead service were estimated to provide a range infrastructure costs. For instance, the difference between overhead and underground service might reflect the sunk costs already required to bring service to the terminal.[10]

Selected photographs obtained during site visits are included in Appendix C to illustrate the general conditions of the visible distribution lines and underground vaults in the area of the Mission and Embarcadero Substations. Table 5-1 shows the possible power sources and distribution distances to the new cruise ship terminal.

[9] Overhead service is not an option for many practical reasons related to construction constraints in the routes shown. Further, it is unlikely that overhead service would be acceptable in the immediate vicinity of Pier 30/32 due to aesthetics of the Port area.

[10] "Sunk costs" refers to the cost of providing service to the Pier 30/32 area, whether shoreside powering of the ships is implemented or not. The infrastructure cost attributed to the shoreside powering per se would be over and above that needed for the Pier30/32 normal operation.

Table 5-1. Possible power source and distribution distance.

Power Source and Location	Distance Between Power Source and Site
Existing Vault in The Embarcadero or nearby cross street (location to be determined)	Assumed Maximum 1,000 Feet (0.2 Miles)
PG&E Embarcadero Substation (Fremont and Folsom Streets)	2,600 Feet (0.5 Miles)
PG&E Mission Substation (Mission and Eighth Streets)	11,000 Feet (2.1 Miles)

Opinions of Probable Construction Costs

Opinions of probable construction costs for underground distribution lines were prepared for the three alternative power tap locations. The cost of construction within the streets of the City is very high as a result several factors, including:

- The confined work environment;
- Frequently limited work hours and access to the required areas; and
- Dense network of underground utilities that must be protected from damage during construction or avoided in selecting underground utility routes.

Working within these constraints can result in construction costs that are triple that in many other urban or suburban settings. All estimated costs for conceptual power supply distribution and transmission infrastructure for the shoreside power assumed the following:

1. Power will be distributed using 12 or 34.5kV. This results in more and larger conductors, larger conduit, and more frequent manholes for pulling conductors for underground ductbank. This is the most conservative assumption and normally most expensive for the conductor and related materials. Overhead lines would share a similar higher cost for conductors for 12 kV or higher voltages.

2. Trench width and depth are estimated conservatively since the final configuration of a new distribution system may include other conduits such as lower voltage conductors, communications conduits, and spare conduits;

3. Manholes are assumed to be placed every 500 feet.
4. Conductors would be 600 kcmil, 15 kV, PVC jacketed, 133% insulated. A total of 6 conductors would be needed, two for each phase (A, B, and C); (Until PG&E completes an EFS, this can not be known with surety.)
5. Conduit would be 6" PVC schedule 80 and would carry 1 set of conductors (phase A, B, and C); (Until PG&E completes an EFS, this can not be knows with surety.)
6. All opinions of probable cost are based on year 2005 construction dollars, no escalation is included[11];

[11] 2005 dollars were used so that the reader may escalate those costs to future years if desired. If the Pier30/32 terminal is begun and completed in the 2007-20010 timeframe, these costs will be slightly higher in 2005 dollars.

7. No specific costs are included for any modifications at substations or splicing to existing conductors. Any such costs would be included in the contingency; and
8. Costs shown are only for providing power to the proposed project site boundary.

The total preliminary estimate of construction costs for each alternative is shown in Table 5-2. Since the final route of a high voltage feeder, for the longer runs may include some overhead service, the estimated cost shown for underground service is likely a worst-case scenario. Since it is the most likely scenario, cost estimates for Alternative 2, with Option A (underground feeder) as a high estimate and Option B (overhead/sunk cost for terminal service) as a low cost estimate, were used in the cost effectiveness analysis.[12]

Table 5-2. Preliminary opinion of construction costs for possible power sources.

Power Source and Location	Estimated Construction Cost
Alternate 1 - Existing Vault in The Embarcadero or Nearby Cross Street	$ 850,000
Alternate 2A - Underground Feeder from PG&E Embarcadero Substation (Fremont and Folsom Streets)	$ 2,200,000
Alternate 3A - Underground Feeder from PG&E Mission Substation (Mission and Eighth Streets)	$9,200,000

Recommendations for Further Refinement of Design and Costs

Within the limited scope of this study, only broad conceptual plans could be identified. A more thorough evaluation of the existing infrastructure will be necessary to focus on a preferred alternative. Questions and matters that should be addressed include:

- Determine all available voltages in existing ductbanks, overhead lines, or substations that might be used to provide power to the proposed project site. Voltages of interest might include 12 or 34.5, kV;
- Continue to seek PG&E cooperation in better understanding what distribution or transmission infrastructure might be currently available; and
- Continue to seek PG&E cooperation in developing a high voltage, high power infrastructure to serve a possible eventual need for shoreside electrical power.

[12] These cost ranges are not sufficiently detailed to include engineering and design, and permitting and contingency explicitly. By offering a range of costs, the reader can reasonably assume that these specific costs will not alter the overall conclusions of this report.

5.5 Power Delivery within the Terminals

As noted above, 12 kV power would be made available from PG&E at a power vault located at the entrance to the terminal near the foot of the pier. As shown in the conceptual plan (see Figure 5-3), the power would be brought in to the terminal along the proposed internal roadway behind the terminal building via underground ducting to a step-down transformer at a new near-dock substation. Bringing power close to the vessel limits the length of the 6.6 kV feeds to the vessel, which allows for reducing the total number of feed cables to the ship. The location of the proposed transformer shown on the conceptual plan will allow the 6.6 kV feeds to be less than 500' long. Again, the number of feeder cables may have to be increased from 2 to 3 or 4, if the distance from the transformer to the point of connection on the vessel is increased substantially beyond 500 feet.

Under this conceptual plan, only a single vessel at a time would be provided shore power at the eastern berth of Piers 30-32. Optionally, additional 6.6 kV power could be brought to the northern berth of Piers 30-32 and an additional transformer and dual cable reel tower could be constructed there to serve a second vessel at the berth (see Figure 5-4). The additional costs to provide the infrastructure necessary to support simultaneous shore power to vessels at both berths was approximately estimated in Table 5-3.

A 12 or 34.5 kV to 6.6 kV transformer is a fairly large piece of equipment requiring a fenced enclosure approximately 25' X 33' for safety and security reasons. For conceptual purposes, the transformer is shown adjacent to the proposed new terminal building, where it could be incorporated into (screened/hidden by) the terminal architecture for aesthetic effects[13]. Locating the equipment below the deck of the wharf is not feasible because of the severe maintenance considerations caused by salt spray in the tidal splash zone under the wharf and because of access and clearance requirements[14]. The use of multiple, smaller transformers in an effort to reduce the footprint of the electrical equipment is not feasible as the equipment size is driven by the needs of stepping down from 12 or 34.5 kV to 6.6 kV (multiple smaller transformers can not accomplish this.)

The cruise vessels would be supplied power via a cable reel tower that would be located close to the face of the wharf at a location approximately midpoint of the range where the various vessels would likely have points of entry in their hulls. Two cable reels would be used to supply the 6.6 kV power feeds to the vessels. The cable reel tower conceptual design is illustrated in Figure 5-5.

The 6.6 kV feed to the cable reel tower would be run either underneath the wharf or installed in a trench cut into the deck. Conceptually, the tower would consist of a 30-inch diameter steel pipe with the cable reel attached on one side, and, in the case of two reels, one on each side. Near the base of the cable reel tower there would be an electrical pull box for both the high voltage feed and the low voltage feed for the electrical motors on the tower. The reel tower would be supported on a new foundation constructed into the wharf deck. The bottom of the reel would be about 7 feet above the deck to provide clearance and the tower would be set far enough back to

[13] If a shoreside power system is determined to be cost effective and/or the Ports desires to include one in the new cruise ship terminal development, the Port would work with the project developer to incorporate design features for aesthetic effects, as well as costs associated with aesthetic and potential loss of usable space.

[14] Locating the transformer above any on-pier structure is not feasible due to the significant weight of the transformer upon the underlying structure and other safety considerations.

clear the hull of the ship. On top of the tower would be a steel davit controlling a sling, through the use of an electric winch, and a steel cable to raise and lower the ends of the cables to the ship. The davit would also be on a geared turntable, run by another electric motor, so it could be rotated away from the ship when necessary.

The cable reels and the lowering frame would be electro-mechanically powered and controlled. The cable lowering and raising system would be pendant controlled from either the pier or the ship. An electrician would energize and de-energize the power at the substation.[15]

5.6 Summary of the Terminal Infrastructure and Operating Costs

The cost to construct the pier-side power lines, substation/transformer and dual cable reel, as shown in Figures 5-3 and 5-5, is approximately $425,000 (see Table 5-3). Adding additional power lines from the substation to the northern berth and constructing a second dual cable reel tower there to service vessels at that berth is estimated to cost an additional $225,000. However, this on-pier infrastructure cost could be doubled if a larger transformer and more than 2 cables are used[16]. Annual labor costs to pull the cables to the vessel and energize the ship from shore, based on an estimated 100 vessel calls at the terminal, is estimated to be approximately $140,000 (see Table 5-4). Breakdown cost estimates of the conceptual shoreside power system are provided in Appendix D. The shipside operating costs (i.e., power energy cost and fuel savings) are discussed later in the shipside alteration sections.

[15] This report does not examine labor union implications of differing craft unions being involved in the shoreside connections. For a variety of reasons, it is highly recommended that a standard set of procedures be followed by an experienced crew at all times.

[16] With a larger 16.5 MW substation and 4-cable reel tower, the on-pier shoreside power infrastructure cost for the shoreside power project for cruise ship terminal at the Port of Seattle was estimated to be about $1.5 million.

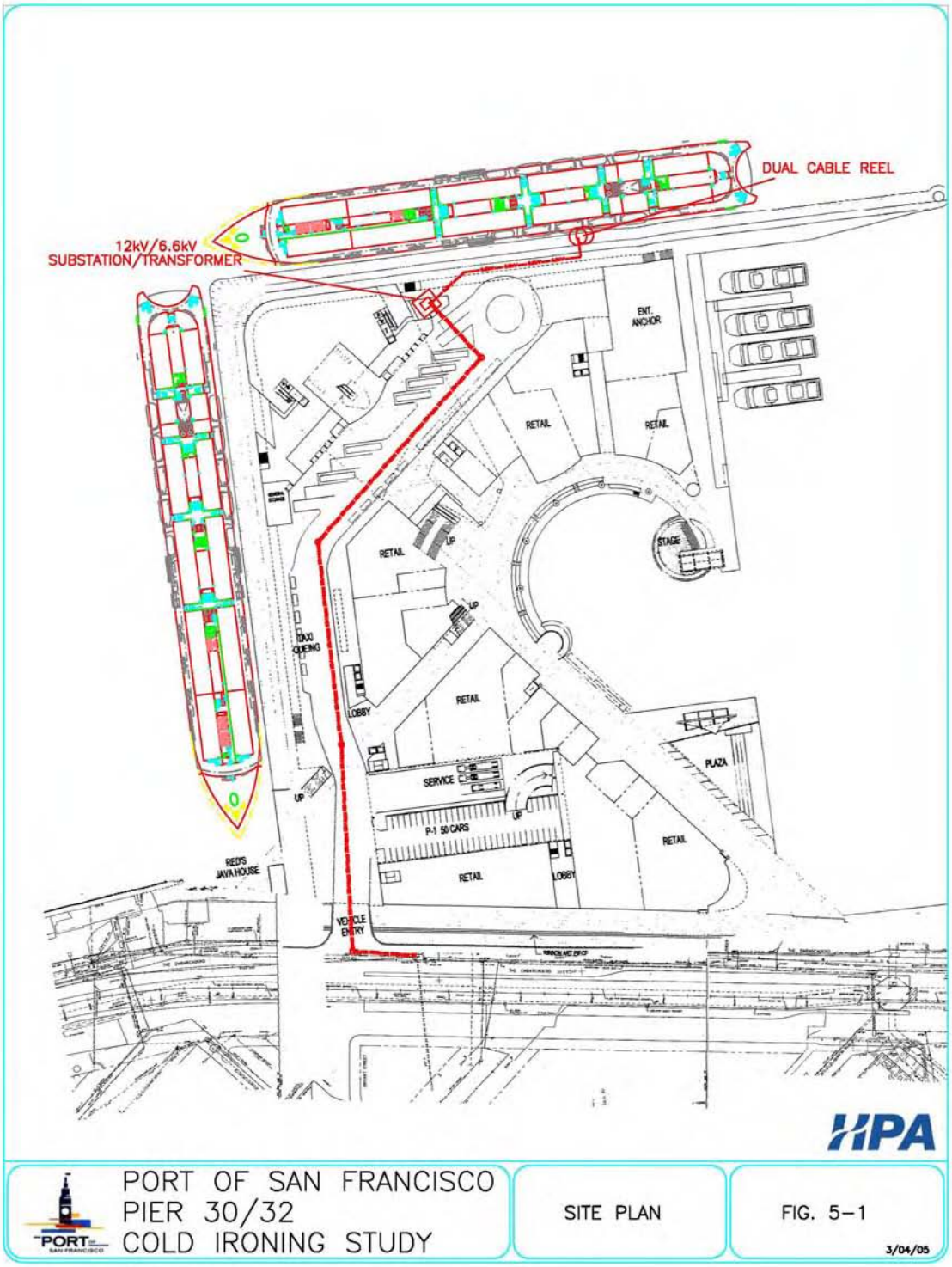

Figure 5-3. Conceptual plan of a one-berth shoreside power system for the Port of San Francisco.

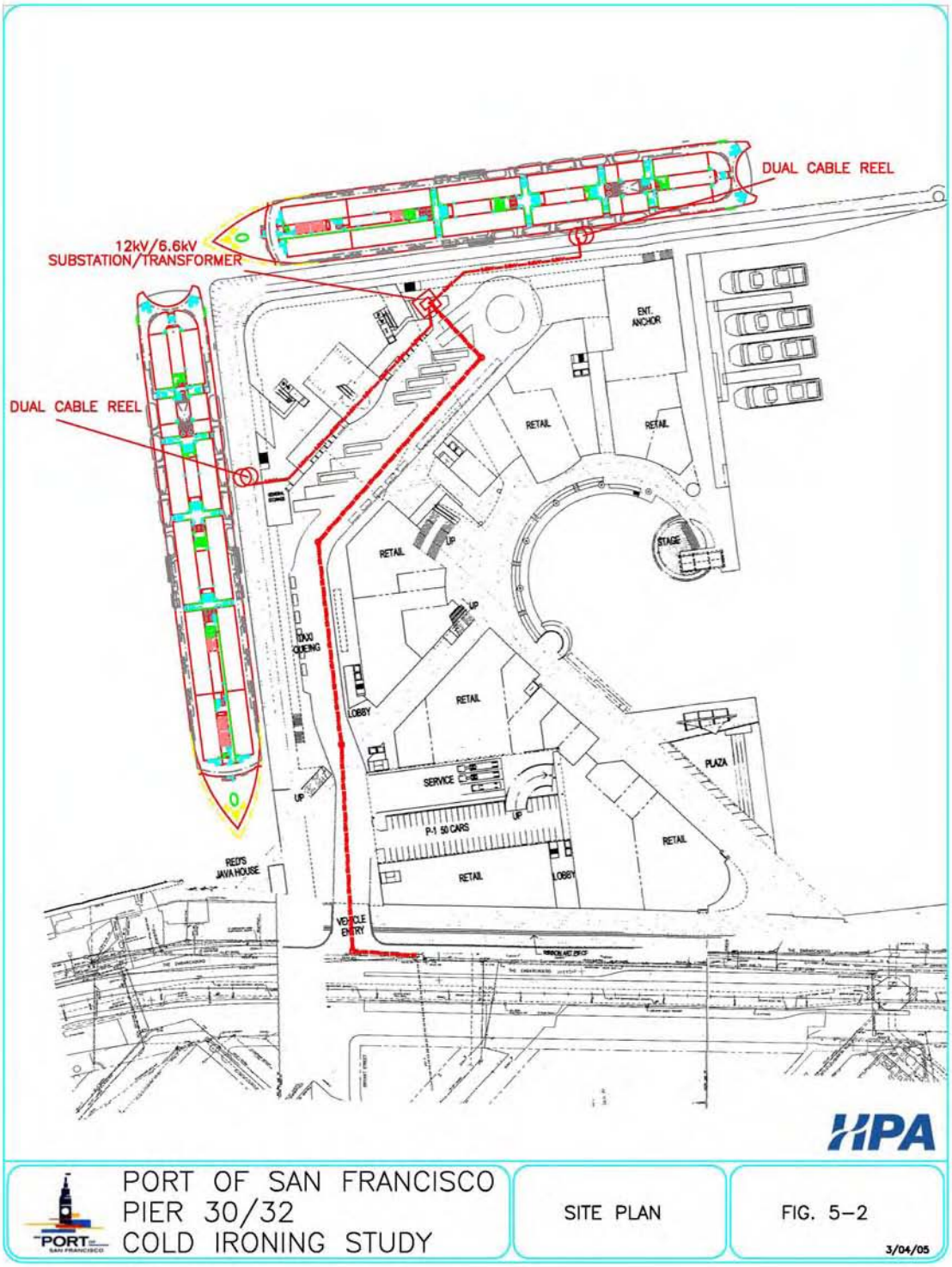

Figure 5-4. Conceptual plan of a two-berth shoreside power system for the Port of San Francisco.

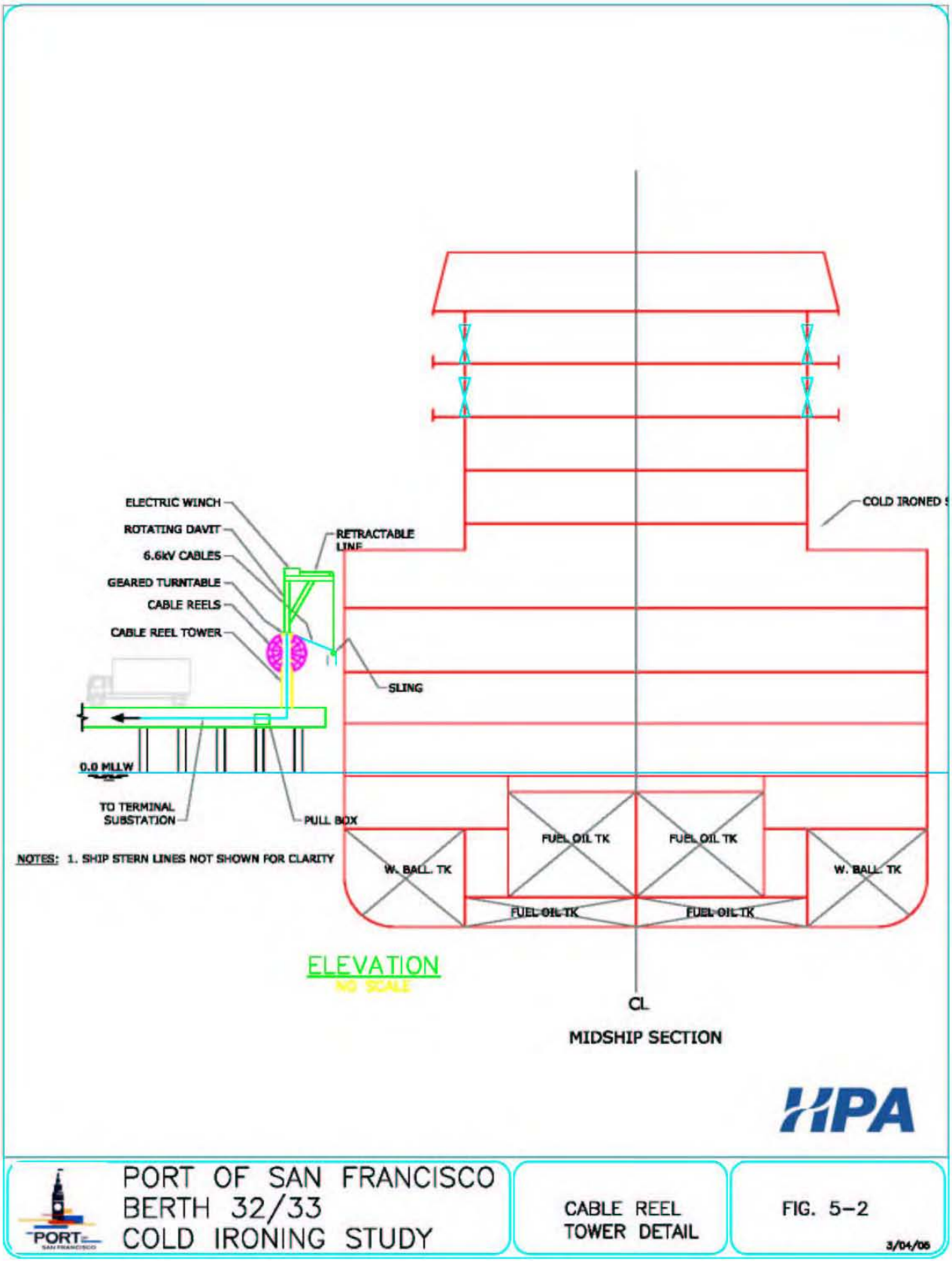

Figure 5-5. Conceptual design of a cable reel tower for a shoreside power system.

Table 5-3. Summary of cost estimates for a conceptual shoreside power system for cruise ships berthed at the Port of San Francisco.

Berth	Meter to Terminal Substation Run Item 1	Substation Item 2	Terminal Substation to Wharf Run Item 3	Run Under the Wharf Item 4	Double Cable Reel Towers (2x6.6kV) Item 9	Total
30-32 east	$117,582	$90,100	$18,657	$7,293	$189,345	**$422,977**
30-32 north	$0	$0	$26,653	$7,293	$189,345	**$223,291**

Table 5-4. Summary of annual operating cost estimates for operating the conceptual reel towers.

Annual Labor Cost Estimates Handling 100 Berth Calls		
Electrician		$105,600
Subtotal		$105,600
Contingency[17]	30%	$31,680
Total		$137,280

5.7 Shipboard Alteration Analysis

This section deals with the anticipated shipboard modifications and vessel operational and safety requirements for a proposed shore power installation at the Port of San Francisco cruise ship terminal, piers 30-32, as well as cost estimates associated with shipside alteration and shoreside power operation (e.g., energy costs and potential fuel savings). Discussion is focused in the four cruise ships selected for this study.

In 2001, Princess Cruises began retrofitting all five ships in its Alaska fleet to receive shore power for hotelling loads at the port of Juneau, Alaska. DAWN PRINCESS was the first. The average capital cost to retrofit the five Princess Cruises ships for shore hotelling power was in the order of $500,000 per ship. Two other Princess Cruises ships, SUN PRINCESS and CORAL PRINCESS, which call at the Port of San Francisco twice per year, have also been retrofitted for hotelling with shoreside power. In addition, commencing in 2002, Princess Cruises began incorporating a shore hotelling power connection as a standard feature on new cruise ships. This was a cost-saving initiative, as the expense of retrofitting is substantially higher than the expense of providing for shore hotelling power during new ship construction.

As a result of Princess Cruises' pro-active and successful program, no additional modifications will be required aboard the DAWN PRINCESS (or the SUN PRINCESS and CORAL PRINCESS) to receive shoreside auxiliary power at the Port. The other three vessels selected for this feasibility study, the REGAL PRINCESS, CRYSTAL HARMONY, and CELEBRITY MERCURY will each require retrofitting equivalent to the modifications accomplished aboard the DAWN PRINCESS.

[17] This includes uncertainty in the assumptions and also uncertainty in overhead benefit costs.

The unique Juneau shore power installation was discussed earlier. As noted, dockside facilities required to provide shore power at the Port of San Francisco cruise ship terminal will be substantially simpler in concept than at Juneau due to reduced tidal action and elimination of the requirement for a shore supply of heating steam, but other challenges in San Francisco such as design aesthetics and the scarcity of space present additional challenges.

Review and Approval of Ship Design Alterations and Revised Operating Procedures

The proposed shore hotelling power retrofits will require significant engineering and arrangement modifications to REGAL PRINCESS, CRYSTAL HARMONY, and CELEBRITY MERCURY. Prior to implementation, the engineering drawings, specifications, and operating procedures for the required modifications will have to be reviewed and approved by the appropriate ship classification societies and regulatory agencies for compliance with standards of accepted marine engineering practice and safety. The respective classification societies for the three selected ships are identified in Table 5-5.

Table 5-5. Classification societies for the three selected cruise ships without shoreside power capability.

Ship	Classification Society
REGAL PRINCESS	Registro Italiano Navale
CRYSTAL HARMONY	Lloyd's Register of Ships
CELEBRITY MERCURY	Lloyd's Register of Ships

All three ships are foreign flag vessels. As a consequence, the United States Coast Guard is not directly involved in the review process for the proposed shipboard modifications. However, prudence and professional courtesy suggest that, particularly in view of its expanded role in homeland security, the U.S. Coast Guard be advised of the proposed modifications and invited to participate and monitor program progress[18].

In consideration of the successful results previously achieved with the Princess Cruises retrofits, the design review and approval processes for modifications to the three selected cruise ships are not anticipated to be difficult. However, time (at least two to three months) must be allowed for the review and approval of drawings and specifications. In addition, an allowance must be made for a classification society surveyor and possible U.S. Coast Guard representative to attend each cruise ship for final inspections and operational tests.

Continuity of Power Supply

The arrangement and design of shipboard components in the shore hotelling power system must ensure that the supply of electricity is not interrupted during either the transfer of hotel load from ship to shore or vice-versa. An inadvertent interruption of electricity is not only disturbing to

[18] As the number of ships servicing the West Coast (and potentially nationally) using shoreside auxiliary power continues to grow, it behooves the U.S. Coast Guard and other federal agencies to become increasingly involved in order to assure general safety and operating practice conformity, thus reducing safety concerns as well as reducing costs through standardization.

passengers and ship personnel, but can also adversely impact shipboard computers, data logging functions, security, navigation, communications, and control systems.

Shore Power Demand and Characteristics

CELEBRITY MERCURY, the largest of the four selected cruise ships considered viable candidates for shore power at the Port of San Francisco, requires up to 12.5MW of shoreside hotelling electricity, with an average load of 9,500 kW at 6.6 kV. All four selected vessels are fitted with 6.6 kV, 3 phase, 60-Hertz high voltage electric systems. As noted previously, the conceptual design provides for 12.5 MW at 6.6 kV. This would provide an effective load demand of about 11MW with a power factor of 0.85, and would eliminate PG&E's power factor adjustments based on its Schedule E-20, their rate schedule for commercial, industrial, and general electric power demands in San Francisco. Energy costs estimated using this rate schedule for shoreside power on selected ships are discussed later in this section.

Impact of the DAWN PRINCESS Precedent on Hardware and Design Parameters

The DAWN PRINCESS installation achieved the primary Juneau air quality objective of minimized opacity with concurrent reductions in the dockside emissions. These emissions, NOx, PM, and SOx, are of primary concern to the Port of San Francisco. Since the DAWN PRINCESS is one of the four selected ships for this study, it logically follows that the electric cable connection hardware for a proposed installation must be interchangeable with, if not identical to, the hardware used aboard the DAWN PRINCESS and at Juneau. The other (internal) ship modifications required to receive shoreside power for hotelling on the REGAL PRINCESS, CRYSTAL HARMONY, and CELEBRITY MERCURY will likewise comply with the general parameters successfully demonstrated aboard the DAWN PRINCESS with equivalent shipboard engineering operations and safety features.

Electric Power Cables and Connections

The proposed new cruise ship terminal installation would require a group of four to six electric cables. Two to four of these would be the power supply and 3-inch (75 mm) electric cables (AMERICABLE mining cables or equal) connecting each cruise ship to the shore substation and its supply of 6.6 kV, 3 phase, 60Hertz power. In addition to these power cables, the group would include one neutral electric cable and one ship to shore Supervisory Control and Data Acquisition (SCADA) Cable. All cables would use the same quick acting male/female plug and receptacle specifications developed by the mining industry and used at Juneau.

The plugs would be mounted at the waterside terminations of the electric cables. The grouped cables would require a dockside cable reel of sufficient cable length to access the variety of vessels calling at the berth, as discussed earlier. The cable reel must allow sufficient freedom of movement to prevent undue stress on the cables from routine ship motions at berth and maximum tidal activity.

Mating receptacles for the shoreside power cable plugs would be permanently mounted in a shipboard cabinet specifically designed to ensure that they are securely supported, safe to operate, and inaccessible to unauthorized personnel.

Point of Entry into Ship Hull

In order to minimize ship retrofit expenditures and maintain consistency in vessel berthing operations, it is assumed that only one point of entry shall be required on the port side of each cruise ship. In addition, safety requires that the high voltage shoreside power cable point of entry be located away from the ship refueling station and outside of passenger zones[19].

Watertight Door and Dedicated Work Space/Compartment

Each ship would require a watertight door at the shore power cable point of entry into the hull. It would provide access to a cable connect/disconnect workspace surrounding the receptacle cabinet within a dedicated compartment on the side of the ship. The cable connect/disconnect compartment needs to be positioned in a secure area to exclude unauthorized personnel. Due to the anticipated expense of routing new shore power supply cables through existing ship structure and interferences, the point of entry should generally be located as near to the ship high voltage switchboard as possible.

When the DAWN PRINCESS was retrofitted in 2001, the project required provision of a new access opening and watertight door in the side of the hull for the shore power cables. The three other selected cruise ships requiring retrofit for shore hotelling power at the Port either have existing locations proposed for points of entry or will require cutting new openings and providing new watertight doors, as indicated below:

Ship	Ship- Proposed Location For Point Of Entry
REGAL PRINCESS	Needs to be determined and a new door provided
CRYSTAL HARMONY	Needs to be determined and a new door provided
CELEBRITY MERCURY	Two existing doors are proposed, one on the port and one on the starboard side of the hull, at frames 247 to 249, approximately 6 meters above baseline, serving compartments adjacent to the passenger embarkation lobby

Review of the general arrangement plans for the REGAL PRINCESS and CRYSTAL HARMONY indicates that potentially feasible locations exist for points of entry. The feasibility of these locations would ultimately need to be confirmed by shipboard inspection of the selected and adjacent areas to identify and deal with structural, piping, electrical, and equipment interferences and possible safety issues. As an example, the DAWN PRINCESS shoreside power installation required construction of a new steel bulkhead in order to comply with high voltage fire protection requirements. Pending confirmation, it is assumed for the preliminary purposes of this feasibility study that the locations suggested below are feasible or that substitute locations can be converted to points of entry at comparable expense and with minimal disruption to shipboard functions. Thus, the specifics of the suggested points of entry are as follows:

[19] Note that at the Piers 30-32 cruise ship terminal, ships would likely berth in different positions, depending on tidal/current conditions; port side berthing if flood tide, and starboard berthing if ebb tide.

Ship	Suggested Location For Point Of Entry
REGAL PRINCESS	Dry Provisions Store Room, frames 49 to 61 or Incinerator Room, Frames 61 to 85, deck 4, portside, approximately 10.9 meters above baseline
CRYSTAL HARMONY	Transformer Room, deck 4, portside, frames 94 to 101, approximately 10.4 meters above baseline

The proximity of the proposed point of entry aboard the CELEBRITY MERCURY to the passenger embarkation lobby may pose a high voltage safety issue. In addition, as discussed under **Internal Power Cable Routing to High Voltage Switchboards,** this proposed point of entry is remote from the ship high voltage switchboard and therefore problematic from the standpoint of retrofit cable routing expense.

Safety Interlocks

Shipboard shore power cable routing would begin at the new shore power receptacle cabinet within the operating station adjacent to the point of entry. Mechanical and/or electrical safety interlocks would be required at the plug/receptacle connections within the shore power receptacle cabinet, the SCADA, and the ship Power Management System (PMS) to prevent inadvertent activation of electrical switch gear and ensure that all of the plug/receptacle connections are complete and secured prior to delivery of shore power to the ship.

Internal Power Cable Routing to High Voltage Switchboards

New ship power cabling would be routed from the shore power receptacle cabinet to a dedicated circuit breaker and the high voltage switchboard for distribution to hotel service loads. The internal ship cabling would be smaller in cross-sectional dimensions than the shore substation power cables. Shipboard cabling would be sized to deliver the ship specific hotelling amperage (including an allowance for instantaneous surges) whereas the shore substation cable must be sized for the largest projected cruise ship amperage. In addition, shipboard cabling would be permanently supported in fixed wireways within the ship, in contrast to the grouped portable substation to ship cabling that would require abrasive resistant sheathing and internal reinforcement to withstand repeated reeling and handling to and from cruise ships.

The locations of the high voltage switchboards on the three selected cruise ships are as follows:

Ship	Location Of High Voltage Swithchboard
REGAL PRINCESS	On centerline of the ship, deck 3, frames 60-69, 9.7 meters from the ship side shell, 3 meters above the baseline
CRYSTAL HARMONY	To portside of the centerline of the ship, deck 3, frames 98-101, 7.7 meters above the baseline
CELEBRITY MERCURY	On the centerline of the ship, frames 120-140, 3 meters above the baseline

These locations and the proposed points of entry indicate that the REGAL PRINCESS and CRYSTAL HARMONY would each require approximately 20 meters of new high voltage shore power cabling between the shore power receptacle cabinet and the high voltage switchboard. CELEBRITY MERCURY would require approximately 85 meters if the proposed existing point

of entry were used. A final decision on the CELEBRITY MERCURY would need to be deferred pending inspection of the ship and a detailed assessment of alternative costs. The choice would be to either use the proposed existing point of entry door and accept higher electrical cable installation expenses or to absorb the cost of a new point of entry watertight door at a location closer to the main switchboard, thereby enabling lower cable installation costs. The ships' existing high voltage switchboards are designed to furnish ship generator power to hotelling loads. The only modifications required would be the addition of a circuit breaker and controls to permit the shore power supply to safely and functionally duplicate a shipboard generator.

Shipboard Shore Power Circuit Breaker

Each ship would require a circuit breaker to connect/disconnect the shore power supply to the main high voltage switchboard. The ships have reported availability of a spare circuit breaker for this purpose as follows:

Ship	Availability Of Spare Circuit Breaker For Shore Power
REGAL PRINCESS	One available - 1250 ampere rating
CRYSTAL HARMONY	None available. However, there is space in the High Voltage Switchboard Room to install additional cubicles
CELEBRITY MERCURY	None available. However, there is space to install a new breaker in the main distribution panel.

The spare circuit breaker aboard the REGAL PRINCESS would be adequate for that ship's estimated 6.7 MW average shore power demand. CRYSTAL HARMONY and CELEBRITY MERCURY would each require purchase of a new high voltage circuit breaker.

Power Management System (PMS)

The basic design concept for providing shore power for hotelling service treats the shore power supply as equivalent to an additional ship generator set. This design greatly facilitates use of onshore power and minimizes risk to shipboard equipment when a PMS functions to automatically synchronize the ship diesel electric generator(s) with the shore power supply prior to paralleling and transfer of the hotel load. All three selected ships report that they are equipped with PMS systems as described below:

	Existing Power Management System_(PMS)		
Ship	Manufacturer	Manned or Automatic Controls	All Ship Power Distribution
REGAL PRINCESS	Cegelec	Fully Automatic	Yes
CRYSTAL HARMONY	ABB SELMA II	Fully Automatic	Yes
CELEBRITY MERCURY	Siemens PMS SIMOS PMA 53	Manned	Yes

A ship PMS facilitates retrofitting of shore hotelling power but must be considered only a starting point. The DAWN PRINCESS shore hotelling power retrofit required $150,000 in modifications to the existing PMS system in order to integrate the necessary shore power synchronization, power surge, safety interlock, and circuit breaker operating features. Prudence dictates that, pending a detailed engineering review of the specifications and operating

characteristics of each PMS, a comparable sum be estimated to upgrade the PMS on each of the three selected ships.

Shipboard Control Panel

A control panel would be required at the ship hotelling power operations station. The panel would have the following displays and buttons:

1. A shore load meter, displaying megawatts;
2. Two shore power breaker position indicator lights, one for "ON" and one for "OFF";
3. Two Main Switchboard breaker position indicator lights, one for "ON" and one for "OFF";
4. A "Shore Power Authorized" keyed security switch connected to the safety interlock system; and
5. An "Emergency Trip" button to back up the automatic safety features and enable manual termination of shore power to the ship in the event of a crisis (e.g., a fire).

Accomplishing Ship Retrofits

It is anticipated that the scope and duration of work required to accomplish the required shore hotelling power modifications aboard the three selected cruise ships would be significant but manageable. Princess Cruises finished the entire DAWN PRINCESS retrofit in a remarkably prompt period of six months. That represents a commendable achievement, but should be considered the minimum duration for a project of this complexity. The following *caveats* apply to other cruise ship retrofits, where circumstances may not be as fortuitous.

Ship inspections, development of detailed engineering design drawings and specifications, and the classification/regulatory agency approval process can easily require four to six months per ship. The classification society/regulatory portion of work usually can be accomplished in two to four months, and expedited upon request.

The re-engineering of PMS and other electrical control components to suit the shore power retrofit could be a fairly lengthy process, dependent upon original equipment manufacturers for accomplishment No other long lead times should be involved for materials and equipment. The new electric cabling, cable support hardware, shore power plugs and receptacles, custom-built shore power supply cabinet, interlocks, circuit breakers, watertight hatch, and new bulkhead steel (if required) are all readily obtainable items.

The shipboard modifications would need to be implemented with minimal disruption to revenue service. Depending upon the individual ship operating schedules and the extent of work involved in each task, the modifications may be accomplished either piecemeal on a voyage-turn basis (concurrent with normal ship operations) or all at once during ship lay-up for periodic dry-docking. The latter is generally the most economical and practical approach to accomplishing modifications, assuming that the lay-up schedule suits the timing and duration of the retrofit project. Assuming efficient organization of work, manpower, and materials availability, including the prefabrication of specialized components (such as the shore power receptacle cabinet and PMS/control system upgrades) the complete ship retrofit could conceivably be accomplished in as little as one to two weeks.

5.8 Description of Proposed Shore Power Operations at the Port of San Francisco Cruise Ship Terminal

This section discusses the sequence of events for the connection and termination of the shoreside power operation. The following general notes should apply to both connection and termination processes:

1. All shore power functions aboard the ships would be managed under the direct supervision of an assigned ship officer, typically the chief engineer, chief electrical officer, or another qualified engineering officer;

2. All shore power functions on the landside of the terminal would likely be accomplished by the terminal operator. A shore power dispatcher would direct the actions of a dockside crew, most probably longshoremen specifically trained for this duty[20];

3. Based upon the experience of Princess Cruises, it is estimated that approximately one hour per call at the Port of San Francisco will be required following ship arrival to connect and activate, and then another hour prior to departure to deactivate and disconnect the proposed hotelling power supply. During the first of these two hours, hotelling loads will continue to be carried at the berth by the ship engine generator set(s). During the second hour, approximately one-half hour of engine operation would be required to bring the diesel generator set(s) back to operating temperature for resumption of service.

The proposed sequence of events for the connection and termination of shoreside power supply cables and dockside hotelling operations are provided in Tables 5-6 and 5-7, respectively.

Table 5-6. Proposed sequence of events for connections of shoreside power.

Proposed Sequence of Events for Connection of Shore Power Supply Cables and Dockside Hotelling Operations
1. Upon arrival of each cruise ship at the terminal, ship and longshore personnel would fasten mooring lines. Once all mooring lines have been made fast, the embarkation gangway would be positioned to enable passage between the ship and shore. 2. Once the ship is secured at the terminal, the propulsion plant would be shut down upon the engine room telegraph order "Finished with Engines" from the bridge. At that point, all remaining shipboard power generation would be in support of hotelling loads. 3. Concurrent with or prior to arrival, the designated ship's engineering officer would proceed to the shore power operating station, unlock its interior entry door, and inspect/prepare the receptacles and safety interlocks for operation. The shore power compartment would be secured to exclude unauthorized persons. 4. The shore power point of entry watertight door on the side of the hull would be opened and secured by ship personnel as soon as convenient upon arrival in San Francisco Bay. 5. The terminal security personnel would close the area of the cruise ship terminal containing the substation, cabling, and cable-handling system to prevent unauthorized entry. 6. Following or concurrent with completion of mooring of the ship and positioning the embarkation gangway, the dockside crew would commence operation of the shore power cable handling system consisting of the shore power cable reel and cable positioning equipment (small crane or lift truck). This action would be accomplished under the direction of the shore power dispatcher. The shore power cable group would be reeled out from its connection to the dockside substation to the point of entry watertight door on the port side of the cruise ship and positioned for receipt by the ship.

[20] As noted previously, for safety and efficiency reasons, a consistent crew, or equally experienced and trained back-up crew, should be available for the cable hook up procedure.

Proposed Sequence of Events for Connection of Shore Power Supply Cables and Dockside Hotelling Operations
7. The ship's engineering officer in charge of shore power operations would establish direct communications with the shore power dispatcher and dockside crew handling the power cabling on the dock. 8. Once the power cables are positioned adjacent to the watertight door, the dockside crew would operate the power cable handling system under direction of the ship's engineering officer to position the six cable plugs into the shore power operating compartment. 9. The dockside crew would reel out sufficient (predetermined) cable slack to allow for normal ship motion and tidal activity during the ship call. 10. The shore power cable group would be connected by a quick operating linkage to an overhead ship structural support padeye near the point of entry watertight door. This support would bear the weight of the cables and ensure that no stress is placed upon the plug/receptacle connections. 11. Cable shipboard positioning, support, and security must be completed to the satisfaction of the ship's engineering officer in charge of shore power operations. 12. Once all of the above have been completed, ship personnel would connect the four-six cable plugs to their respective receptacles in the shore power cabinet. 13. Connection of all plugs and receptacles would automatically enable the ship safety interlock system and ship to shore SCADA to communicate and permit transmission of shore power to the ship. 14. Upon authorization from the ship's engineering officer in charge, the shore power dispatcher would close a circuit breaker at the shore power substation and establish voltage, frequency, and phase at the ship shore power connection cabinet. 15. The ship PMS would then be activated by the engineering officer in charge to automatically synchronize the ship diesel generator with the shore power supply phase and frequency. 16. When synchronization has been established, the shipboard shore power high voltage circuit breaker would be closed and the ship diesel generator would be operated in parallel with the shore power supply. 17. Once satisfactory parallel operations were established, the ship diesel generator would be disconnected from the hotel load by opening its high voltage circuit breaker. Hotelling demand would then be supplied from the shore substation. 18. The diesel generator would be secured in accordance with routine shutdown procedures. Ship diesel engine emissions would be halted and would remain zero at the cruise ship terminal until engines are started for warm-up in preparation for departure from the Port of San Francisco.

Table 5-7. Proposed sequence of events for termination of shoreside power.

Proposed Sequence of Events for Termination of Dockside Hotelling Operations and Disconnection of Shore Power Supply
The termination of hotelling shore power would follow a sequence that is largely the reverse of the foregoing. All shipboard operations would remain under the direct management and control of the designated ship engineering officer and all functions on the land side of the terminal would be accomplished by the Port of San Francisco dockside crew under the direction of a shore power dispatcher. The area of the terminal containing the substation, cable, and positioning system would remain closed by terminal security personnel to prevent unauthorized entry during these events. The sequence of events would be as follows: 1. Following engine orders from the bridge, the ship diesel generator would be started and warmed up in accordance with routine procedures for normal hotel and propulsion plant operations. 2. Ship engineering personnel would enter the shore power operating station compartment and maintain security in the space to exclude unauthorized persons. 3. The ship's engineering officer in charge of shore power operations would establish direct communications with the shore power dispatcher and dockside crew handling the shore power supply from the terminal. 4. Upon completion of routine engine warm up operations (assumed to take approximately one-half hour) the ship engineers would activate the PMS to automatically synchronize the diesel generator

Proposed Sequence of Events for Termination of Dockside Hotelling Operations and Disconnection of Shore Power Supply
with the shore power supply. 5. Once synchronization is achieved, the ship's diesel generator high voltage circuit breaker would be closed and the diesel generator would be operated in parallel with the shore power supply. 6. Once satisfactory parallel operations were achieved, the shipboard shore power supply breaker would be opened by ship engineering personnel, transferring the hotel load from the shore supply to the ship generator and returning shipboard electric power operations to self-sufficiency. 7. The ship's engineering officer in charge would then notify the shore power dispatcher to open the terminal shore power substation circuit breaker. 8. The shore power dispatcher would notify the ship's engineering officer in charge when shore power has been secured from the terminal substation. 9. The shore power plugs would be disconnected by ship engineering personnel from the receptacles in the cabinet, deactivating the shipboard safety interlock system. 10. Ship engineering personnel would ready the cables for withdrawal from the ship. 11. The quick-acting linkage supporting the waterside end of the shore power cables from the overhead ship structure would be disconnected. 12. The bundle of six cables would be drawn out of the shore power operating station compartment by the dockside crew, using the small crane or lift truck provided for positioning and supporting the cables. 13. The dockside crew would reel the shore power supply cables back into a secure storage location in the terminal and the small crane or lift truck used to position and support the cabling would be moved back from the edge of the dock as necessary to facilitate handling of the mooring lines. 14. Ship personnel would close and secure the shore power receptacle cabinet and the watertight door at the point of entry. 15. Ship personnel would exit the shore power operating station compartment and lock the interior doorway to maintain security. 16. The ship would resume routine operations. 17. The embarkation gangway would be raised and stowed, longshoremen would cast off the mooring lines, and the ship would depart the Port of San Francisco.

5.9 Shipboard Cost Estimates for Using Shoreside Power

The major shipboard costs associated with using shoreside power include the shipboard shoreside power retrofit cost and operating costs (energy kilowatt-hour costs, and fuel savings). The energy costs can be more than half the total project costs over the life of the project, and so are the most critical factor influencing the cost and cost effectiveness of the project.

Shoreside Power Retrofit Cost Estimates

The selected cruise ships are all technically viable candidates for retrofitting a shore power supply for hotelling loads. Though, detailed engineering cost estimates for each ship are beyond the scope of this feasibility study. However, a rough order of magnitude estimate of the average cost per ship can be made based upon the expense of prior comparable conversions.

Princess Cruise's approximate average cost per ship beginning in 2001 was $500,000 (excluding steam lines). Allowing for 4% inflation per year, the 2001 cost of Princess retrofits is equivalent to $608,300 in 2005. This figure is consistent with ENVIRON's Cold Ironing and Cost Effectiveness Study for the Port of Long Beach (ENVIRON, 2004), which estimated that $574,000 would be required to convert the cruise ship ECSTACY to receive onshore hotelling power.

Adding a 15% allowance for contingencies to be resolved during detail engineering design development, a conservative average estimated cost for retrofitting REGAL PRINCESS, CRYSTAL HARMONY, and CELEBRITY MERCURY is therefore $700,000 per ship, or $2,100,000 for the three ships. For the cost effectiveness analysis, a cost estimate range of $500,000 to $700,000 was used to represent low and high-end retrofit costs.

Operating Cost Estimates

Ongoing shipside operating costs for shoreside auxiliary power supply consist of purchased electrical load costs minus fuel savings. Shipside labor costs are incidental to the overall ship docking process.

Purchased Energy Costs – the estimated energy costs were based on the predicted summer and winter power consumptions (kW-hr), and the estimated time-related power demand. Other factors considered in the estimate were fixed customer charges, facility demand charges, power factor adjustment, and peak period rates. PG&E estimated the annual purchased energy cost for shoreside powering for the four selected ships using the PG&E's current E-20 rate schedule (included in Appendix E)[21]. PG&E uses this rate schedule for service to customers with a maximum demand of 1,000 kW or more. The primary voltage was assumed to be 12 or 34.5 kV with one new meter for shoreside power purposes. PG&E, using its rate schedule and the typical annual usage pattern shown in Table 5-8, calculated average energy costs for an individual ship and the 4-vessel cohort. It was also assumed that a cruise ship would typically berth early in the morning at 6:00AM to disembark the passengers by 10:00AM, and would depart with new passengers by 6:00PM; this schedule checked well with most of the 2004 port call data and schedules.

PG&E provided average costs of energy for the two scenarios considered in this study, a individual vessel nominally calling 12 times a year and a four vessel cohort calling 52 times a year as shown in Table 5-8. Given the infrastructure costs, it would be expected that including more vessels in the program would be a more effective project. However, in addition to infrastructure costs, PG&E (Zeller, 2005-1) estimated that the average energy billing rates would be considerably lower with the 4 vessel cohort at $0.156/kW-hr than with an individual vessel calling 12 times a year at $0.220/kW-hr.

[21] PG&E also offers some incentive and power energy savings programs to reduce energy costs during peak power season periods. One program that might be of interest to a shoreside power application is the Base Interruptible Program (BIP), which is intended to provide load reductions on PG&E's system on a day-off basis when the California Independent System Operator (CAISO) issues a curtailment notice (PG&E's Schedule E-BIP is included in Appendix E). There are two options in the PG&E's E-BIP with different notification periods and associated incentive payments on a monthly basis; Option A has a notification period of 30 minutes with a $7.00/kW incentive payment, and Option B has a notification period of 3 hours with a $3.00/kW-month incentive payment. Since it would require more than 30 minutes for a cruise ship to reduce the shoreside power and resource to its onboard power generation, Option B of the PG&E's E-BIP could be applicable to shoreside power, if the Port and/or ship operators opt to take advantage of the incentive program. Under the terms of the BIP the customer only needs to reduce load to qualify not physically disconnect from the grid. A drawback would be the elimination of potential emission benefits of shoreside power during these entailment periods/events. However, PG&E's E-BIP does have "Event Limits" to cap at the maximum number of event/days, and hours/events for these options.

This project may qualify for the Base Interruptible Program (E-BIP)[22]. Customers will be required to reduce their load down to their firm service level (FSL) within thirty (30) minutes notice (Option A). Under the terms of the BIP the customer only needs to reduce load to qualify not physically disconnect from the grid. PG&E anticipated that they could earn a $0.015/kWh to $0.019/kWh in incentives if they successfully participated in the program.

Table 5-8. Sample vessel and 4-vessel cohort load demands for energy cost estimates.

Month	Number of Calls		Peak	Part – Peak	Off-Peak
	One Vessel	4 Vessels	Summer (12 noon – 6 pm)	8:30am – 12noon Summer 8:30am – 9:30pm Winter	6pm – 8:30am Summer 9:30pm – 8:30am Winter
January	0	0			
February	0	0			
March	1	4		9.5 hours per call	2.5 hours per call
April	2	6		9.5	2.5
May	1	8	6.0	3.5	2.5
June	1	6	6.0	3.5	2.5
July	2	8	6.0	3.5	2.5
August	2	7	6.0	3.5	2.5
September	1	6	6.0	3.5	2.5
October	1	4	6.0	3.5	2.5
November	1	3		9.5	2.5
December	0	0			

Summer considered as May-October.

For the other ports studied or implementing shoreside power, a wide range of costs are experienced. At the terminal in Juneau, it has been reported that the rate is only 0.03$/kW-hr. (www.peninsulaclarion.com/stories/092800/ala_092800alapm0010001.shtml). For the cruise ship terminal in Seattle, the flat rate of 0.06 $/kW-hr is being charged at the port through the city owned utility (http://www.nwcurrent.com/renewable/1692337.html) and other offsets may be in the contract. However, in ENVIRON's study for the Port of Long Beach (ENVIRON, 2004), the energy costs range from 0.20 to 0.40 $/kW-hr. More recently, the Port of Los Angeles has discussed subsidizing the cost of electricity for their shoreside power projects such that it is the same as the cost of the fuel that they would otherwise have burned (estimated as between 0.06 and 0.10 $/kW-hr). The Port of Long Beach has been trying to set up a Port-wide power distribution structure, and is claiming power prices in the range of $0.085/kwh. So the costs estimated here for the Port of San Francisco program fall within this range.

Fuel Cost Savings - Ships would receive a fuel cost benefit by purchasing shoreside generated power instead of running onboard auxiliary diesel engines. Table 5-9 gives the estimated fuel savings for each selected ship based on the fuel consumption rates while hotelling and recent snapshot prices for MDO and IFO diesel fuels of $505 and $254 per metric ton (or $458 and $230 per short-ton on August 01, 2005 using Houston spot prices), respectively. As shown in this table, the annual fuel cost savings range from about $40,000 to more than $70,000.

[22] ibid

Table 5-9. Annual fuel savings for selected ships.

Vessel Name	Fuel Type	Fuel Savings	
		(tons/yr)	($/yr)
DAWN PRINCESS	IFO380	163	37,506
REGAL PRINCESS	IFO380	149	34,393
MERCURY	IFO380	306	70,555
CRYSTAL HARMONY	MDO	121	55,357

5.10 Summary and Recommendations

As will be seen in Section 7 of this report, electrical energy supply costs are a significant consideration in the feasibility of shoreside auxiliary power supply, in that they affect both the cost-effectiveness of the emissions control measure, as calculated in $ cost/ton air pollutant emissions reduced, as well as the operating cost to the cruise ship and industry on an ongoing basis, and thus their willingness to participate in such a program on a voluntary basis. In short, it costs more to the cruise industry to use shoreside power while at port rather than shipboard generated electrical power. The "break-even" point for this portion of the cost is in the range of $0.05-0.10/kW-hr of provided electrical load[23].

Thus, while other costs presented here certainly need to be refined as Pier 30/32 shoreside power is further considered, special attention will have to be paid to establishing competitive electrical power costs for this use. This will especially involve PG&E, the Port, the developer and operator, and Hetch-Hetchy Water and Power. As is also discussed later in this report, outside funding is potentially available for the explicit purpose of reducing the capital and operating costs of this type of pollution reduction technique. Those outside funding options are discussed, but not assumed in our later calculations.

[23] See Section 7 of this report, as well as personal communications with John Doll, Princess Lines, July 2005.

6. ALTERNATIVE CONTROL TECHNOLOGIES

Modern marine diesel engines are remarkably efficient, reliable, and economic power generation units. Until recent years, the impact of ship emissions on air quality was considered insignificant. However, by 1997 worldwide concern for air quality began to focus attention on vessel emissions and the International Maritime Organization (IMO) adopted the International Convention for the Prevention of Pollution from Ships (MARPOL) Annex VI, "Regulations for the Prevention of Air Pollution from Ships." This was followed by adoption of a set of marine diesel engine emission standards in 1999 (Tier 2) and in 2003 (Tier 3) by the United States Environmental Protection Agency (USEPA). All of these regulations established upper limits on marine engine emissions that are well in excess of those for highway vehicles. All allowed engine manufacturers three years to develop new designs that would comply with the regulations. None of the regulations applied to pre-existing engines.

The vast majority of marine engines now in service were constructed before the imposition of any emission regulations. Because these engines were designed and built to give decades of safe reliable economic service, the impact to date of regulations on the quantity of worldwide marine engine emissions is small. The situation will change over the long term and tighter regulations are anticipated in the future. In the interim, ship diesel engine emissions continue to be of concern, particularly in populated regions confronting air quality concerns, such as the San Francisco Bay Area.

The feasibility of shore power and alternative air emission technologies for the Port of San Francisco cruise ship terminal are being studied in anticipation that vessel operations at the terminal will have an adverse impact on air quality due mainly to the following findings:

- Diesel engines on cruise ships calling at the terminal were manufactured and entered service prior to the imposition of effective marine engine emission regulations. Such engines are sometimes referred to as "unregulated" engines;

- The residual fuel used in cruise ship engines is characterized by a relatively high level of impurities, notably sulfur and ash, as well as agglomerations of hydrocarbon molecules called asphaltenes; and

- The combination of these components in the fuel and the peak temperature of the diesel combustion process result in problematic levels of particulate matter (PM), nitric oxides (NOx) and sulfur oxides (SOx) in the engine exhaust. These are the three primary emissions of concern for health and air quality regulations. Secondary, but nevertheless, harmful emissions of concern are carbon monoxide (CO), carbon dioxide (CO2), unburned hydrocarbons (HC), volatile organic compounds (VOC), and opacity.

It should be noted that the discussion in this section bears upon applications of large, medium speed marine diesel engines used for cruise ship propulsion and electric generator applications. (Much of the discussion applies with equal validity to large, slow speed marine propulsion engines; small, high speed marine propulsion engines; and auxiliary service engines. However, these latter categories of equipment are not included in the field of cruise ship engines covered by the feasibility study and so are outside of its scope.) All discussion that follows is, therefore, directed towards the management of exhaust emissions from medium speed diesel engines.

Also, the design, construction, and operation of ships is subject to safety rules and regulations administered by the United States Coast Guard and classification societies including the American Bureau of Shipping, Bureau Veritas, and Lloyd's Register. Any significant change to existing ship design, construction, and/or operating procedures is subject to review and approval by these agencies. In addition, where technical proposals involve shore facilities, the review and approval by local agencies including zoning, construction code, environmental safety, homeland security, police, and fire departments is required. As a consequence, shore power and all of the alternative technologies discussed in this report must be considered preliminary proposals pending review and approval in accordance with applicable regulations and ordinances.

Several technical and operational alternatives to shore power exist for reducing or eliminating emissions from cruise ship diesel engines. The costs and benefits of alternatives to shore power cover a broad range depending on the pollutant controlled and where within the airshed the emissions are controlled. In most cases, a control technology employed will primarily or exclusively affect either particulate or nitric oxide emissions but not both. Also, it is clear that the impact on air quality depends on the spatial allocation of emissions, so emission reductions that occur away from berth during transit (because most cruise ships are designed to allow the same engines to produce both propulsion and auxiliary power) may not produce the same improvement in air quality that shoreside power does, especially for those directly affected by the terminal operations.

Alternative technologies to shore power have been grouped into four general categories in this report. Section 6.1 addresses possible cruise ship engine upgrades. Section 6.2 reviews alternative exhaust after-treatment techniques to reduce the levels of harmful components in cruise ship engine emissions. Section 6.3 investigates ship fuels and shipboard fuel modifications to achieve reduced emissions. Section 6.4 summarizes the feasibility of alternative means to provide the energy requirements of cruise ships at berth.

6.1 New Engines and Engine Modifications

Manufacturers of marine diesel engines and after market equipment vendors have responded to the MARPOL regulations by developing and proof testing improved hardware and software designs. These are now available on the new (regulated) engines and in some cases as retrofits to older (unregulated) engines. However the new engines just meeting the MARPOL standards are expected to result in a minimal NOx reduction (0-10%) from the unregulated levels for medium-speed diesel with little effect on PM emissions when burning high sulfur (2.5%) fuels as described in Section 4.2.

Both the replacement of older diesel engines with regulated engines and the modification of older diesel engines with emission reducing components might be accomplished within the existing space limitations of ship machinery compartments, but this is a significant consideration. Another important operational advantage of replacing or upgrading an existing unregulated ship engine with lower emission equipment is that the benefits, unlike shore power. are effective full-time and can impact emissions generated while meeting both ship propulsion and electrical energy demands. To be specific, a ship with new or upgraded engines will improve California air quality the entire time (measured in days per voyage) it is operating in California regional waters, as opposed to the mere eight to ten hours (with the propulsion plant secured) at the Port of San Francisco cruise ship terminal.

The chief air quality disadvantage of engine replacement or modification compared with shore power is that the maximum emission reduction from engine replacement or modification is at best fractional while shore power enables a 100 percent benefit (zero emissions) while at berth. So, any cost effectiveness estimate depends on whether or not those benefits incurred during transit are included

The marketing and engineering focus of marine engine manufacturers is heavily weighted toward new engines and compliance with international and national emissions regulations. Progress has been and continues to be made. New marine diesel engines are now available with design features that could achieve 15 to 30 percent lower NOx emissions, depending upon the age and model of the unregulated engine under consideration for replacement, though not all engines may produce these emission reductions.

Turbines represent another emission control option and are also used on some of the cruise vessels calling at the Port. Turbines produce less than 50% of NOx emissions compared with medium speed diesel engines. Turbines also produce very low levels of particulate because of the combustion design and they require a very low sulfur fuel. Other advantages of turbines are the small size and long operational lifetime. However, the fuel costs for turbines can be significant because the turbines are less efficient (consume 40% more than a diesel engine) and the fuel costs are much higher. If a turbine were already equipped on a vessel, its use would reduce the benefit of employing shoreside power and might represent a reasonable alternative.

However, excepting rare cases of major reconstruction programs (as when Cunard's QUEEN ELIZABETH 2 was converted from steam turbine to diesel electric propulsion), the expense of repowering a cruise ship is prohibitively high. Repowering subjects the ship operator to a prolonged loss of service revenue in addition to the enormous purchase and replacement costs (in the order of tens of millions of dollars) of new engines. Such expenses are difficult to justify on the basis of emissions benefits, and only enter the realm of economic feasibility when considered in conjunction with other ship reconstruction objectives. On the other hand, it is reasonable to anticipate that, as a matter of prudent business practice, no ship operator planning a major vessel conversion program would consider repowering with engines that did not comply with the most stringent emissions regulations. The type of engine and its emissions used on board may also be a consideration when owner/operators order new ships.

Engine Modifications

Some engine manufacturers and after market vendors offer retrofit equipment to upgrade existing ‘unregulated’ engines with one or more of the emission reducing features developed for newer ‘regulated’ engines. The list of proven engine modifications and their anticipated impacts on emissions are briefly summarized in the Table 6-1.

Table 6-1. Engine modification alternatives.

Engine Modification	Anticipated Impact On Emissions
Modify cylinder heads for direct water injection.	Reduce NOx 10 to 20%.
Delay injector timing; injector upgrade	Reduce NOx 20%
Install an exhaust gas recirculation (EGR) system.	Reduce NOx 20%, increase HC, CO, and PM
Install an inlet air humidification system.	Reduce NOx 10%
Ceramic coat cylinder combustion surfaces.	Reduce organic PM 5%

As indicated, none of the proven engine retrofit technologies provides the full suite of desirable benefits, and some actually incur emissions penalties. Retrofitting reduced emissions hardware to existing marine engines is also problematic due to the high cost and equipment downtime required for the modifications. While admittedly a relatively minor task compared to repowering, retrofitting an engine is typically too time consuming to be accomplished on a routine voyage-turn basis and will have to be deferred until the ship is inactivated for periodic drydocking, repair, or other reasons. The cost of new hardware, engine control software, and conversion labor can be anticipated to be in the order of $350,000 to $1,000,000 per engine.

6.2 Engine Exhaust After-treatment Systems

This category includes both shipboard and external systems designed to reduce exhaust emissions before they are released into the atmosphere. The technologies identified in Table 6-2 provide a range of potential feasible alternatives. They can be installed either individually or as a combination to address both NOx and PM emissions.

Table 6-2. Potential exhaust after-treatment alternatives.

Treatment Technology	Projected Impact On Emissions
Selective Catalytic Reduction (SCR)	Up to 95% reduction in NOx (followed by a DOC for ammonia clean up)
Ionizing Wet Scrubber (IWS)	95% reduction in SOx, 90% reduction in PM
Diesel Oxidation Catalyst (DOC)	40% reduction of organic[1]-PM, 90% in ROG and CO
Diesel Particulate Filter (DPF) [2]	90% reduction in organic-PM, ROG, CO, SOx

[1] The organic fraction is less than 10% of PM emissions when using IFO at 2.5% sulfur and about 50% of PM emissions when using MGO at 0.2% sulfur.
[2] Typically requires the use of ultra-low sulfur (15 ppm) diesel fuel.

Both the oxidation catalysts and particulate filters affect only the organic portion of the PM emissions from vessels and are more effective with engines burning very low sulfur fuels. For engines burning high sulfur fuel, this study estimated that over 90% of the particulate mass is due to hydrated sulfate from the fuel sulfur. The oxidation catalyst reduced only a portion of the organic particulate (less than 10% of the particulate produced from high sulfur fuel), called the soluble organic fraction (SOF), which is comprised of primarily unburned fuel and engine oil. The particulate trap reduces the SOF and elemental carbon fraction of the particulate. With a catalyzed filter, the sulfur in the fuel may be converted to particulate sulfate more readily, possibly increasing the total particulate. This conversion necessitates the use of ultralow sulfur fuel. Uncatalyzed particulate filter alternatives exist, but would provide minimal reduction without a lower sulfur fuel.

Shipboard Systems

Shipboard engine exhaust treatment systems share the operational advantage of repowering and engine modifications in that they can be beneficial full-time, with both propulsion and auxiliary engines, and are not limited to dockside operating hours. A handful of distillate-fueled vessels have been built or retrofitted with some of these systems. One major potential drawback of retrofitting shipboard exhaust treatment systems to existing vessels is that they require locations

and space that, depending upon the hull and machinery arrangement, may not be readily available.

The control options SCR, DOC and DPF are not feasible without additional measures and would provide little PM reduction when high levels of SOx are present in the exhaust. These treatment options and their potential benefits can only be considered if a change to a low sulfur distillate fuel is made or if an effective IWS is installed upstream to remove SOx from the exhaust gas. DPF technology has enjoyed success in small land vehicle applications but presents practical maintenance (filter plugging) problems when considered for the much larger engines used aboard ships.

SCR and IWS are individually ineffective exhaust treatment systems because neither deals with both NOx and PM emissions. However, the combination of SCR and IWS is effective with an anticipated 90% reduction in PM and 95% reductions in both NOx and SOx. While short of the zero emissions possible with shore power, these are, nevertheless, impressive emission reduction options. SCR needs a supply of ammonia (NH_3) to deal with NOx. The ammonia is typically provided by an onboard tank of aqueous urea (NH_2CONH_2). IWS requires a supply of hazardous sodium hydroxide (NaOH) solution for removal of SOx. Shipboard logistics, storage and handling of these chemicals increase operating costs and raise safety issues. The liquid sludge effluent from a combined SCR/IWS exhaust treatment facility contains compounds of sodium sulfate as well as heavy metals from the ash including vanadium and nickel. These materials cannot be simply discharged into harbor waters or a municipal sewer system. The liquid sludge will require storage aboard ship in a special holding tank until eventually disposed under controlled conditions. Disposition of the sludge at the Port of San Francisco will require use of an approved toxic waste management contractor and full documentation.

The capital expenditure required to retrofit a combined SCR/IWS system aboard any of the selected cruise ships is estimated to be in the order of two to three million dollars per ship. Annual operating costs would depend on the number of hours of use, but will be significant in any case, probably in the order of at least $50,000 to $100,000 per cruise ship if the system is employed regularly. (ACTI, 2005)

External Systems

External exhaust treatment systems using the foregoing proven technologies have been proposed but not yet built for handling emissions from ships at dockside. These systems consist of a shore or barge mounted facility and piping apparatus designed to capture, treat, and release ship stack gas to the atmosphere. The chief benefits of the concept are the following:

- Limited capital investment (one facility handles all ships); and
- There are no requirements for additional equipment space, significant involvement of offshore personnel, hazardous chemicals, or toxic effluents to be managed aboard the ships.

A noteworthy proposal of this technology (entitled Advanced Maritime Emissions Control System (AMECS) has been made by Advanced Cleanup Technologies, Incorporated (ACTI) and is presently under consideration for cargo terminals in the Ports of Los Angeles and Long Beach. The AMECS proposal involves a tall barge mounted structure and exhaust piping apparatus to

access the area above the ship stack, and to connect and soft seal itself to the exhaust uptake(s) of the ship engine(s) in service. The engine exhaust is subsequently directed via the piping apparatus to a treatment unit on the barge.

At the Port of San Francisco cruise ship terminal, tidal action is modest and vessel draft changes at berth are minimal. A shore-based facility would therefore be adequate and more economical to operate than a barge-mounted facility (which would require costly positioning by a harbor tug for each cruise ship call). The ACTI proposed external exhaust treatment facility employs an effective multistage emission control unit combining an IWS and SCR. As a shore installation, this facility and its chemical logistics requirements would have to comply with routine industrial safety codes, ordinances, and environmental regulations, but its impact on shipboard operations and costs would be relatively insignificant. The claimed benefits are a 90% reduction in PM and 95% reduction in both NOx and SOx. While still short of the zero emissions possible with shore power, these are impressive numbers. The preliminary ACTI cost estimates for the proposed shore based external system are substantial - $7,000,000 in initial capital investment and projected $1,000,000 annual operating costs. (ACTI, 2005)

The preliminary cost estimates of a shore-based exhaust treatment facility exceed the estimated costs of a shore power installation serving the four selected cruise ships. However, in view of the excellent claimed emissions benefits and because the proposed facility would conceivably handle many of the cruise ships calling at the Port of San Francisco, its expense may well be effectively equal to or less than the combined costs of other feasible emission reducing alternatives. However, while the concept may prove suitable for marine cargo terminals, attention would be required to ensure that its very tall structure does not impose an unacceptable visual impact on the design aesthetics of cruise ships or the architecture of the adjoining passenger terminal.

6.3 Fuel Modifications and Alternative Fuels

The owner/operator specified fuel oils now in use aboard the selected four cruise ships are listed in Table 6-3. The higher fuel sulfur level is expected to result in higher PM emissions, and usually the high sulfur fuels result in an increase in NOx levels, most likely due to high nitrogen content associated with high sulfur fuels.

Table 6-3. Fuel specifications for the four vessels studied.

Ship	Fuel Oil
REGAL PRINCESS	IFO 180 (IFO 180 centistokes kinematic viscosity @ 50°C) (1.5% sulfur)
DAWN PRINCESS	IFO 380 (IFO 380 centistokes kinematic viscosity @ 50°) (2.5% sulfur)
CRYSTAL HARMONY	MDO 1SO DMB (MDO, 6 centistokes kinematic viscosity @40°C) (0.2% sulfur)
CELEBRITY MERCURY	IFO 380 (IFO 380 centistokes kinematic viscosity @ 50°C) (2.5% sulfur)

Marine Fuels: Residuals versus Distillates

Residual fuel oils are petroleum products primarily composed from the residue of refining processes. The residue consists of dense, viscous products and inorganic compounds remaining after lighter, high quality distillate products such as gasoline, highway diesel fuel, and kerosene have been removed from the crude oil feed stock. The residual product is mixed with a small quantity of a compatible but less viscous product to enable the resulting blend to be readily stored, pumped, and used as fuel.

The following provides a few general notes on marine and California highway diesel fuels with respect to their sulfur and ash contents, product origins, costs, and emissions:

- IFO 180 and 380 fuel oils contain 2.5 to 3.5% sulfur and are blends of refinery distillates and (primarily) residual oils;
- Marine Diesel Oil (MDO) typically contains less than 2% sulfur and is a distillate. A 'DMB' designation establishes that it cannot be transported in a tank containing traces of residual oil. A 'DMS' designation establishes that it is permissible to transport it in a tank containing traces of residual oil;
- Marine Gas Oil (also known as Number 2 Diesel fuel) (MGO) typically contains less than 1.5% sulfur, and most likely much lower, and is a high quality distillate. It cannot be transported in a tank containing traces of residual oil;
- California low sulfur diesel fuel (also known as California highway diesel) contains only 0.3% sulfur (and starting in 2006 will average 15 ppm) and is a premium quality distillate. This fuel is not widely available in the marine industry. It has recently achieved limited application to harbor craft such as commuter ferries and towboats operating in California and Texas ports;
- Marine fuel prices, like the prices of all petroleum products, are subject to inflation and wide fluctuations. Daily spot market prices are obtainable at ports all over the world, but long-term price projections are highly speculative. In general, it can be said that fuel costs vary inversely with sulfur content and viscosity numbers, as indicated in the following approximation of March 2005 West Coast spot prices. These prices exclude barging and related delivery costs[1]:

    - IFO 380 - $226/metric ton
    - IFO 180 - $241/metric ton
    - MDO ---- $500/metric ton
    - MGO ---- $600/metric ton

- An early March 2005 price for California highway diesel fuel is $2.50/gallon at San Francisco Bay Area service stations. Subtracting applicable Federal and State taxes (24.4 cents per gallon and 18 cents per gallon, respectively) the price of this fuel for marine purposes is approximately $2.10/gallon, or $635 per metric ton;

[1] Barging, fuel oil surveys and laboratory analyses to verify fuel quality represent a variable percent addition to the basic fuel price, depending largely on the quantity of the fuel order. A very rough approximation of 3% can be assumed for purposes of preliminary discussions. To illustrate: A 200 ton delivery of MDO might cost the shipowner 200 tons x $500/ton x 1.03 (for barging, etc. expenses) = $103,000. These fuel costs were presented here to illustrate how the costs vary inversely with fuel sulfur contents, and were not used in the cost effectiveness analysis; instead August 2005 spot prices were used in the analysis.

- Fuel ash content tends to increase with fuel density and sulfur content and directly contributes to PM emissions; and
- Fuel sulfur content directly relates to SOx emissions and, like ash content has a substantial impact on PM emissions. The higher the sulfur and ash content, the higher the PM emissions.

The four selected ships comply with standard cruise industry practice by employing modestly priced fuels. The engines and shipboard fuel treatment systems aboard these ships have been optimized to give safe, reliable, and economic service with those fuels. An uncompensated switch to a higher cost distillate fuel would impose a substantial increase in operating expense and place the ship operator in a competitively disadvantaged position. However, the operators of the CRYSTAL HARMONY responded that it already uses low sulfur (0.2%) fuel oil indicative of MGO, and the operators of the REGAL PRINCESS responded that it uses a lower sulfur (1.5%) IFO fuel in Alaska.

Because the sulfur in the fuel can be responsible for a large portion of the PM emissions, the California Air Resources Board (CARB) is considering a program to encourage the use of MDO for ship auxiliary diesel engines operating in California regional waters[2]. If all cruise ships use low sulfur fuel, the effective emission reductions for shoreside power would be reduced.

Alternative Fuels

The choice of any marine fuel from the field of alternatives has traditionally been primarily based on economic considerations. These are chiefly the cost of the fuel itself and the consequent costs of ship maintenance, fuel logistics, and convenience of operations. Three of the four cruise ships selected for this feasibility study operate on conventional liquid fuels. The option of conversion to a dual fuel ship, enabling dockside operations with a less polluting gaseous fuel, such as compressed natural gas, would require the complete and probably infeasible reconstruction of the diesel engines to add a spark ignition system and alter engine timing. The ship fuel storage and delivery system, engine lubricating system, and control systems would likewise require massive alterations. A full range of dual fuel safety concerns would have to be addressed. These modifications, if technically possible, would amount to a complete multimillion-dollar replacement or reconstruction of the ship engine(s), fuel systems, fuel storage tanks, and fuel delivery logistics. As noted, the expense for a ship retrofit is astronomical and cannot be justified on the basis of reduced emissions in port.

The synthetic Fisher-Tropsch Diesel Fuel and biomass derived Bio-Diesel Fuel have both been proposed as diesel emission reducing options for marine applications. Each remains problematic. Fisher-Tropsch appears to offer significant emissions benefits, but is still a new technology under development insofar as supply logistics, costs, and vessel safety issues are concerned. More time is needed before it can be seriously considered a viable emission reducing alternative for the Port of San Francisco cruise ship terminal. Bio-Diesel has appeared in very limited vehicular applications on California streets and highways. Vessel emissions tests conducted in 2002 in San Francisco Bay (under direction of the San Francisco Bay Area Water Transit Authority) established that, compared to operations with California highway diesel fuel, Bio-Diesel reduced PM 30% but simultaneously raised NOx emissions an unacceptable 13%.

[2] http://www.arb.ca.gov/msprog/offroad/marinevess/documents/draftproposal051805.pdf

The remaining alternative cruise ship fuels are liquid distillate products produced by the petroleum industry for marine and highway use. As previously noted, the prices of fuel oils increase dramatically with quality, lower sulfur content, and progressively lower emissions signatures. The choice of an emission reducing alternative distillate fuel for in port service is therefore ultimately driven by the operating cost differential between the existing and proposed fuel(s).

In addition to the problem of comparative costs, a distillate fuel flash point question arises as a consequence of ISO and Safety of Life at Sea (SOLAS) regulations. These require that the flash point of marine fuels be a minimum of (no less than) 60 degrees C. Since the flashpoint of MGO can vary between 57 and 69 degrees C it is possible that an MGO fuel could be received that is not in compliance with the regulations. The risk is even greater with California highway diesel. It has a minimum flash point of 130 degrees F (54.4 degrees C). The best means to approach this issue is to request U.S. Coast Guard approval of a feasible solution for each cruise ship. It is possible that, in consideration of the local air quality benefits, an exception to the regulations would be granted. The approval request would have to include detailed engineering drawings and specifications and ensure that the proposed distillate fuel storage and piping systems are positioned away from sources of heat, such as boilers.

A potential engine lubrication problem arises from the fact that marine diesel engine lubricants are tailored to suit the fuel in use. If a long-term switch in fuel type occurs, a change in engine lubricating oil specifications will probably be required. The question is largely dependent on the duration of planned operations with distillate versus residual fuel and the properties of the two specific fuels involved. A switch to lubricating oil with different specifications can be problematic, particularly on a ship underway at sea. Such things as a new auxiliary lubricating oil tank or a change in engine lubricating oil feed rate may be required. As a consequence, the concept of changing to a distillate fuel upon entering port and changing back to a residual fuel upon departure 10 to 12 hours later may not be feasible. The fuel and lubrication questions posed by this concept need to be investigated with the engine manufacturer on a ship specific, case by case basis, and are beyond the scope of this study.

Fuel Modifications

As previously described, one of the primary sources of harmful components in marine diesel engine exhaust is the high peak temperature of the diesel combustion process, which causes NOx. The most effective means developed to date for reducing diesel NOx emissions involves the introduction of fresh water into the engine combustion chamber to reduce the peak combustion temperature. Engine designs incorporating either direct water injection into the cylinder combustion space or inlet air fogging systems were discussed previously under the New Engines and Engine Modifications and found to be generally lacking due to their high capital cost and limited emissions benefits. A more practical, beneficial, and broadly accepted method to introduce water into the engine combustion chamber employs a stable water-fuel emulsion, in which approximately 15 to 25 % of the of the resulting blend is fresh water and the rest is fuel.

The water content of emulsified fuels produces no energy, so the volume of emulsified fuel required producing a unit of power (such as one kilowatt) is 15 to 25% greater than the volume of unblended (straight) fuel needed for the same power. This leads to the potential need, if an engine is operated at or near rated output, for larger sized fuel injectors and fuel service pumps.

In addition, for residual fuel installations, special safety controls are required to prevent the engine from overspeeding during an accidental failure of the fresh water supply to the emulsification unit. The choice to operate on either straight or emulsified fuel is largely at the discretion of the ship operator. Emulsified fuel can be used full or part time, underway at sea and/or in port. NOx reducing fuel-water emulsions come in two basic forms.

Residual Fuel/Water Emulsions - When a residual fuel is used, a stable emulsion can be achieved with an onboard high-energy system that blends fresh water with the fuel and concurrently homogenizes the fuel so that the agglomerated, hard to burn molecules characteristic of residual fuels are eliminated. This kind of system has been proven successful and reliable by decades of service in large land utility engine applications. NOx has been reduced by 20 to 25%, PM roughly 4%, and exhaust opacity completely eliminated.

The United States Maritime Administration and California Air Resources Board are currently proposing a large, deep-sea vessel demonstration of this technology in California regional waters. Shipboard space requirements for an onboard water-fuel emulsification system have been modest and readily managed.

The capital expenditure for a cruise ship installation is estimated to be in the order of $200,000 to $250,000. This would cover all ship modifications, equipment, and personnel training. Additional operating expenses would be relatively minor, primarily the cost of supplying the fresh water for the emulsion and for routine maintenance of the emulsification equipment and controls.

These operating costs are typically less than the engine fuel and maintenance savings that result from improved combustion. Fuel consumption savings are in the order of 5%. (Enabling a corresponding reduction of 5% in the "greenhouse gas" CO2).

Mineral and soot deposits on engine internals and engine exhaust heated boilers are substantially reduced, with consequent beneficial impact on parts longevity and minimized risk of accidental exhaust system fires. A properly tuned shipboard system can even be set for optimization under two distinct operating modes:

(a.) minimum NOx and PM emissions while in port
(b.) minimum fuel consumption while underway at sea.

For the Port of San Francisco cruise ship terminal, a convenient and simple shore hose connection would provide a low cost supply of municipal potable water for the emulsification unit. For extended service underway at sea, the ship would need to dedicate or convert a portion of existing internal tank capacity to provide the required increase in fresh water storage volume. This water would be replenished from shore potable water supplies while the vessel is berthed in ports of call.

A shipboard residual fuel/water emulsion-homogenization system can therefore provide a significant reduction to NOx and PM emissions and eliminate exhaust opacity for relatively low cost. Its chief emissions drawback is that the NOx and PM reductions are only partial, and no improvement is achieved in SOx emissions.

Distillate Fuel/Water Emulsions - Unlike residual fuels, distillate fuels cannot maintain emulsions without the addition of stabilizing surfactants. Two vendors (Lubrizol and Aquazole) now manufacture stabilized blends of distillate diesel fuels for highway and off-highway use. These products typically employ blends of 15% water and 85% distillate fuel. The California Air Resources Board has verified that the Lubrizol product PuriNOx reduces emissions of NOx 14%, PM 63%, and VOC 25% when run with fuels with sulfur levels below 500 ppm. These emissions benefits were determined in comparison to another distillate fuel, Number 2 diesel oil. If PuriNOx is compared with a residual fuel oil, the PM reduction would be even greater and there would be a virtual elimination of SOx.

The chief drawbacks unique to the use of distillate fuel/water emulsions aboard cruise ships are high blended fuel costs, ship tank and piping system conversion costs to enable the use of two fundamentally different liquid fuels, possible engine lubrication problems, and the regulatory issue concerning fuel flash point. In addition to these, fuel injector and fuel service pumps must either be confirmed adequate or increased to handle the additional volume of water in the emulsion, as previously discussed under "Residual Fuel/Water Emulsions".

The high cost of distillate emulsions poses a major problem. The distillate fuel/water emulsion alternative begins with the assumption of a switch to the most expensive grade of marine (or California highway) fuel and then imposes degradation in engine fuel economy of roughly 15% by adding water and surfactant to the blend. The net result to the ship operator is a tripling of fuel costs at berth.

To illustrate, suppose CELEBRITY MERCURY changed from the present IFO 380 to an MGO water emulsion for in-port power. The ship's present reported consumption of fuel at berth is 1.8 metric tons/hour x 10 hours = 18 metric tons of IFO 380 at $254/metric ton. This totals to about $4,600 per port call. With 15% water in the alternative emulsified MGO fuel the engine consumption would have to increase 18% (1/0.85) and the cost of the MGO used in the blend would be about $600/metric ton. The net result is a new operating fuel cost of about $12,700 per port call. Of course, the price differential between MGO and IFO costs varies, and recent spot prices could vary (http://www.lloydslistbunker60.com/) somewhat, and so affect this estimated cost differential.

A potential engine lubrication problem arises from the fact that marine diesel engine lubricants are tailored to suit the fuel in use. If a long-term switch in fuel type occurs, a change in engine lubricating oil specifications will probably be required. The question is largely dependent on the duration of planned operations with emulsified distillate versus residual fuel and the properties of the two specific fuels involved. A switch to lubricating oil with different specifications can be problematic, particularly on a ship underway at sea. Such things as a new auxiliary lubricating oil tank or a change in engine lubricating oil feed rate may be required. As a consequence, the concept of changing to an emulsified distillate fuel upon entering port and changing back to a residual fuel upon departure 10 to 12 hours later may not be feasible. The fuel and lubrication questions posed by this concept need to be investigated with the engine manufacturer on a ship specific, case by case basis, and are beyond the scope of this study.

In addition to the foregoing, a flash point question arises as a consequence of ISO and Safety of Life at Sea (SOLAS) regulations. These require that the flash point of marine fuels be a minimum of (no less than) 60 degrees C. Since the flashpoint of MGO can vary between 57 and 69 degrees C it is possible that an emulsified MGO fuel could be received that is not in

compliance with the regulations. The risk is even greater with California highway diesel. It has a minimum flash point of 130°F (54.4°C). The best means to approach this issue is to request U.S. Coast Guard approval of a feasible solution for each cruise ship. It is possible that, in consideration of the local air quality benefits, an exception to the regulations would be granted. The approval request would have to include detailed engineering drawings and specifications and ensure that the proposed emulsified distillate fuel storage and piping systems are positioned away from sources of heat, such as boilers.

6.4 Advanced Technologies

The field of advanced technologies for cruise ships calling at the Port of San Francisco is severely limited by practical economics, demand, and size considerations. Solar and wind power are non-polluting but costly per unit of energy and insufficient in capacity to meet cruise ship demands. Fuel cells, storage batteries, geothermal, hydroelectric, and nuclear energy also fail to meet practical feasibility and economic requirements.

A new land or barge-mounted spark-ignition (gasoline or natural gas) engine-generator installation of sufficient power capacity would enable lower emissions but would be very costly to construct and operate. A new land- or barge-sited natural gas fueled gas turbine generating station would be a preferable choice and would enable significantly lower emissions than shipboard diesel generators. However, the capital and operating costs of any of these proposals would be at least equal to, if not substantially higher than, utility grid furnished shore power generated with comparably low emissions natural gas fired steam and/or gas turbine power plants.

6.5 Summary

Alternative technologies can be employed in tandem with one another or separately. However, to produce equivalent emission reductions to shoreside power, more than one option must be employed. In Table 6-4, a suite of alternative controls is reviewed along with cost and effectiveness estimates for the four-vessel cohort subject to this study. The control technologies chosen were those deemed most feasible in terms of implementation. A number of assumptions were required to estimate the emission reductions and costs, so the figures in Table 6-4 should be considered uncertain and require more study.

Table 6-4. Summary cost and effectiveness for alternative control measures for 4-vessel cohort.

Control Measure	Capital Cost ($)	Operating Cost ($/call)	Emission Reductions and Cost Effectiveness		
			NOx (tons/yr., $/ton)	PM (tons/yr., $/ton)	NOx + 10PM (tons/yr., $/ton)
MGO fuel	$0	$6k	3.3, $86k	2.7, $90k	30.3, $8k
MGO/water-injection or humid air	$2000k	$6k	12.0, $22k	2.7, $97k	39.4. $7k
MGO/water emulsion	$1000k	$7-8k	10.8, $23k	2.9, $87k	40.2, $6k

Notes/Major Assumptions:

1. For MGO Measure, capital costs could be incurred if extra fuel tanks must be added. Emission reduction expected over the entire berthing time.
2. For MGO with Water Injection or Humid Air Measure, capital cost could be more if many engines must be retrofitted (only one per vessel assumed here); 20% NOx control assumed; and emission reduction expected over the entire berthing time.
3. For MGO with Water Emulsion, estimate included a 14% NOx and 31% PM reduction (63% reduction of the organic portion of PM run on MGO); and emission reduction expected over the entire berthing time.
4. These control measures would reduce hotelling/berthing emissions, as well as transit emissions, but only berthing emissions were used in the calculation.

Overall alternative controls could provide significant reductions in PM and NOx emissions. The use of lower sulfur fuel is by far the least expensive option for controlling PM emissions, and if employed once the vessel was within the Golden Gate Bridge (i.e. reducing transit hotelling emissions as well), and for the entire berthing time could reduce PM emissions more than shoreside power. Water injection or water emulsions were of equivalent cost and effectiveness, but could not produce an equivalent NOx emission reduction to shoreside power.

7. COST-EFFECTIVENESS ANALYSIS

This section addresses the project cost-effectiveness using information discussed in other sections, including Section 4 Auxiliary Mode Emission Analysis and Section 5 Conceptual Design of a Shoreside Power System. The capital and operating costs were combined from the different elements of the project and amortized to present dollars over the life of the project. The cost and cost effectiveness is provided in terms of individual vessels, and two, three, and four vessel cohorts.

7.1 Costs Summary

Section 5 describes in detail the project and assumptions used in estimating capital and operating costs for the Port of San Francisco project. This section provides the cost estimates for land and vessel capital and the amortized operating cost requirements. The total project cost is presented as a present value to be compared with the emission reductions over the life of the project.

Specific elements of the landside project include an underground high voltage system for a two-pier system allowing scheduling flexibility for ships with shoreside power connections. Low cost and a high cost sensitivity cases are presented. The low cost sensitivity case eliminates 50% of the capital cost for landside construction because some electrical power infrastructure (such as trenching and other similar activities) must already be in place to bring power to the piers. The high cost sensitivity case for landside capital costs is for an underground system in the absence of any other construction. The low cost case is 50% of the high cost case.

As noted in Section 5, historically, the cost to retrofit vessels to permit shoreside connections has been in the order of $500,000. A contingency cost of $700,000 was used to account for inflation and other unknown situations with many of the vessels considered for shoreside power. As is demonstrated later, this cost differential for vessel retrofit is a minor element in the total cost of the project.

The landside operating costs were estimated for operating personnel assigned to maintain the shoreside connections and other aspects of the facility. The personnel cost ($137,280 per year) was for one full time equivalent, which could be amortized for one or more vessels calling at the Port. No adjustment was made for the number of vessels or calls at the Port. This cost is expected to occur annually and was amortized over the life (20 years) of the project using a rate of return of 4% to estimate a net present value to compare with the capital costs.

The shipside operating costs were considered to be the electric power cost accounting (i.e., subtracting) for the fuel savings. PG&E provided the electric power costs ($/kW-hr) per vessel and per 4-vessel cohort with and <u>without interruptible service cost reduction</u>. Because of fees and other base costs, the cost per kilowatt-hour for an individual vessel was estimated as significantly higher than for more vessels. Cost rates used in the cost effectiveness analysis were estimated as 0.141 $/kW-hr for the 4-vessel cohort and 0.220 $/kW-hr for individual vessel(s). The electric energy cost is the most significant cost of this project. The energy cost (the cost savings from reduced fuel use if using shoreside power) for electrical production using on-board engines ranges from about 0.05 $/kW-hr using heavy fuel (IFO380) to 0.10 $/kW-hr using a lighter lower sulfur fuel. Therefore, the overall energy cost estimate (accounting for shore power

cost and fuel cost reduction benefits) for the sum of the individual vessels is double the rate for the 4-vessel cohort. The energy cost would occur annually and was amortized over the life (20 years) of the project using a rate of return of 4% to estimate a net present value to compare with the capital costs.

Table 7-1 presents a cost summary for the project for the four types of costs incurred: land, vessel, capital, and operating. The shipside operating cost for electrical energy is the most significant fraction of the overall project cost, especially when more than one vessel is considered for this project.

The Port requested that 2 and 3 vessel cost effectiveness be analyzed. The same approach for costs was used for the 4-vessels together. The higher electric costs (0.220 $/kW-hr) were used for 2 and 3 vessels together as a conservative estimate, but the electricity costs would likely fall between the high and low costs cited in discussion here and in Section 5. Therefore, the 2 and 3 vessel costs presented here may be proportionally higher than actually would be experienced. This possibility warrants further study and input from the power suppliers. Table 7-1 presents this information.

Table 7-1. Cost summary for individual vessels and vessel cohorts (2 vessels DAWN and REGAL PRINCESS; 3 vessels add MERCURY).

	DAWN PRINCESS	REGAL PRINCESS	MERCURY	CRYSTAL HARMONY	2-Vessels	3-Vessels	4-Vessels
Shipside capital cost (Low)	$0[1]	$500,000	$500,000	$500,000	$500,000	$1,000,000	$1,500,000
Shipside capital cost (High)	$0[1]	$700,000	$700,000	$700,000	$700,000	$1,400,000	$2,100,000
Landside capital cost (Low)	$1,405,000	$1,405,000	$1,405,000	$1,405,000	$1,405,000[2]	$1,405,000[2]	$1,405,000[2]
Landside capital cost (High)	$2,809,780	$2,809,780	$2,809,780	$2,809,780	$2,809,780[2]	$2,809,780[2]	$2,809,780[2]
Shipside purchased Electrical Energy Operating Cost (annual)	$151,096	$138,556	$284,240	$114,840	$289,652	$573,892	$441,415
Shipside Fuel Saving (annual)	*(-$37,506)*	*(-$34,393)*	*(-$70,555)*	*(-$55,357)*	*(-$71,899)*	*(-$142,454)*	*(-$197,810)*
Landside O&M (annual)	*$137,280*	*$137,280*	*$137,280*	*$137,280*	*$137,280* [1]	*$137,280* [1]	*$137,280* [1]
Shipside Net Present Value: Operating costs	$1,543,732	$1,415,612	$2,904,050	$808,391	$2,959,344	$5,863,394	$3,310,660
Landside Net Present Value: Operating costs	$1,865,680	$1,865,680	$1,865,680	$1,865,680	$1,865,680	$1,865,680	$1,865,680
Combined Project Value: Low ($)	$4,814,461	$5,186,341	$6,674,779	$4,579,120	$6,730,073	$10,134,123	$8,081,389
Combined Project Value: High ($)	$6,219,192	$6,791,072	$8,279,510	$6,183,851	$8,334,804	$11,938,854	$10,086,120

[1.] Note that landside capital and operating costs are the same, regardless of the number of vessels, and the energy cost is lower for only for the 4-vessel cohort based on PG&E estimates.
[2.] DAWN PRINCESS has already been retrofitted for shoreside power use where available.

7.2 Cost-Effectiveness Summary

The cost effectiveness was determined for individual vessels and for 2-, 3- and 4-vessel cohorts using the projected costs and expected emission reductions over the 20 year life of the project. Once the annualized operating costs have been calculated to the net present value, the cost effectiveness was determined by a simple metric of dividing those costs by the project's emissions benefits. Table 7-2 presents the emission reductions by pollutant types, as well as cost-effectiveness values with different scenarios. The emission reductions estimated and shown in Table 7-2 use only the estimated time under shoreside power, not the entire berthing period. Also, emissions that would be generated from powerplant providing the electrical power were subtracted from the reduced emissions. The cost effectiveness estimates in Table 7-2 account for the total project cost against only the NOx, only the PM, and a combined measure that gives greater weight to PM emission reductions. This benefit measure was proposed by ARB (2005) for the Carl Moyer program to better value particulate emission reductions in terms of public health benefits and for comparison with other PM emission reduction measures such as particulate traps for trucks and off-road equipment. Since emission reductions of other pollutants would have value for air quality, Table 7-2 also presents the cost-effectiveness values for emission reductions of all pollutants.

Table 7-2. Emission reduction and cost-effectiveness summary (2 vessels DAWN and REGAL PRINCESS, 3 vessels add MERCURY).

Estimate	DAWN PRINCESS	REGAL PRINCESS	MERCURY	CRYSTAL HARMONY	2-Vessels	3-Vessels	4-Vessels
Emission Benefit Summary							
HC (tons/year)	0.22	0.20	0.40	0.16	0.41	0.82	0.98
CO (tons/year) [1]	0.29	0.27	0.55	0.22	0.56	1.10	1.32
NOx (tons/year)	10.53	9.66	19.81	7.55	20.19	40.01	47.55
PM (tons/year) [1]	0.68	0.62	1.28	0.07	1.30	2.58	2.65
SOx (tons/year)	7.95	7.29	14.96	0.47	15.24	30.20	30.67
(NOx + 10*PM)	17.3	15.9	32.6	8.2	33.2	65.8	74.1
Cost Effectiveness ($/ton and $/adjusted ton)							
Low All Pollutants	$12,239	$14,378	$9,020	$27,041	$8,925	$6,783	$4,858
High All Pollutants	$15,810	$18,826	$11,188	$36,517	$11,053	$7,991	$6,063
Low NOx – only	$22,854	$26,848	$16,843	$30,344	$16,665	$12,666	$8,497
High NOx – only	$29,522	$35,155	$20,892	$40,978	$20,639	$14,921	$10,605
Low PM – only	$354,133	$416,014	$260,990	$3,313,358	$258,235	$196,258	$152,425
High PM – only	$457,460	$544,734	$323,736	$4,474,509	$319,809	$231,209	$190,237
Low (NOx + 10*PM)	$13,890	$16,317	$10,237	$27,798	$10,129	$7,698	$5,456
High (NOx + 10*PM)	$17,943	$21,366	$12,698	$37,540	$12,544	$9,069	$6,809

[1] Emission benefits subtract electrical generation powerplant emissions from powerplant.

The upper threshold for cost effective programs in the proposed Carl Moyer criteria is $14,300 per combined ton of NOx and PM (although many are funded at much more cost effective levels). The combination of NOx and PM typically use a weighting factor that values PM emission reductions from between 10 and 30 times its numeric emission reduction. ENVIRON used the low end of that range to be conservative, but the higher end of the range dramatically reduces the cost per ton estimates provided in Table 7-2.

Another significant factor in the cost effectiveness of this program is that if a ship is already using a low sulfur fuel, the particulate emission reduction benefits of shoreside power are

dramatically affected. The CRYSTAL HARMONY is purported to use a low (0.2%) sulfur fuel, significantly reducing particulate benefit from the use of shoreside power. The use of low sulfur fuel by itself may be a more cost effective program to reduce particulate emissions, but provides little NOx emission reduction benefit.

Overall, under the current assumptions, incorporating two vessels (calling 24 times a year) would be cost effective by combining the NOx and PM benefits. The energy costs for one, two, or three vessels were taken at the high end of the costs that PG&E estimated for a single vessel calling 12 times a year, and energy costs range from 15% to 45% of the amortized cost of the project. So, with 2 or 3 vessels calling 24 or 41 times a year, one would expect some energy cost reduction making 2 or 3 vessel cohorts more cost effective than is shown in Table 7-2.

Sources of Funding for the Project

In order for the project to move forward, however, the funding for capital and other costs should be investigated more deeply. The basic funding opportunities can be categorized as State\Local, Federal, and emission credits.

The Carl Moyer Program has been in place for some time and has been used for several marine applications to fund projects. The State of California allocates funding to be administered by local entities such as the Bay Area Air Quality Control Management District (BAAQMD) to fund projects that benefit local air quality. Special case State funding has been used for the benefit of air quality and could include line item funding or tax incentives.

United States Environmental Protection Agency (EPA) (National Clean Diesel Campaign/Voluntary Diesel Retrofit Program) line item funding has been available to reduce emissions from diesel engines. The EPA has sponsored several initiatives with elements that could apply to a shoreside powering initiative. The West Coast Diesel Reduction Collaborative (http://www.westcoastcollaborative.org/projects.htm#marine) and the West Oakland Collaborative are two examples. The EPA contributed some funding for the Seattle shore-powering project. The EPA administers several other grant programs aimed at diesel emission reductions, including:

- Diesel Retrofit Grants, which have been used to help local agencies implement diesel emission reduction projects;
- Regional grant programs, such as Region 10 Regional Geographic Initiative grants; and
- Grants provided by the SmartWay program to reduce truck idling.

Emission Credit Trading is emerging as an option in California. Entities like the POSF would generate credits by developing projects that reduce emissions. Some or all of these emission reductions could be purchased by other developers for mitigating their own emissions. Although there is no formal process in place as yet, there is much interest in developing the concept. The serving electrical utility may be interested in providing funding, either through direct grants, or as a method of generating emission credits. For instance, PG&E has an Electric Rate Tariff that provides funding for the conversion of diesel powered agricultural pumps to electricity and emission credits generate are retained by PG&E. A similar program could be feasible for Cold Ironing at the Port.

The Supplemental Environmental Program (SEP) is another source of funding for emission control projects. Violators of the Clean Air Act, as part of an agreement, fund mitigation programs as a portion of their violation penalties. The funding can be derived from State or Federal enforcement actions but is always special case funding and depends on availability.

The Congestion Mitigation and Air Quality (CMAQ) program has historically been exclusively restricted for use on highway projects (including car ferries as a special case). However, recent Congressional actions may allow some of this money to be used for nonroad (offroad) projects. The CMAQ program is funded from the Federal highway motor fuel tax, but is administered by the individual state departments of transportation with the oversight of the Federal Highway Administration.

8. CONCLUSIONS AND RECOMMENDATIONS

The Port of San Francisco has entered into a development and lease agreement with a developer to build a mixed use/cruise terminal facility at Piers 30-32. The cruise terminal will be named the James R. Herman International Cruise Terminal and will become the primary cruise terminal for San Francisco. One of the potential mitigation measures for reducing air pollution impacts is the use of technologies such as shoreside electrical power to reduce hotelling emissions from cruise ships while at berth, by way of allowing the ships to turn off their self-generating electrical units. Alternatives to shoreside power for air emission reduction could include the use of low sulfur fuels and new engine technologies that would reduce emissions not only at berth but also throughout a cruise ship voyage.

This document reports the findings of a study carried out by ENVIRON International Corporation and its subcontractors to examine the technical and cost feasibility of the shoreside power mitigation option, and it discusses other possible air pollutant emissions reduction measures.

This section of the report provides the overall conclusions and recommendations of this study.

8.1 Assumptions

In Section 1 of this report we identified several caveats related to this report. Before summarizing our conclusions and recommendations, we summarize those assumptions here.

- Aesthetics - The aesthetics of the waterfront in San Francisco are critically important. Because the port is not a typical industrial port, such as the Port of Oakland or the Port of Los Angeles, additional considerations will have to be made regarding the aesthetics of the shoreside power design. The material provided here gives the reader a general understanding of the visual impacts of the shoreside power equipment. Artists' renderings and such will further facilitate assuring that the equipment for shoreside power is aesthetically acceptable.
- Candidate ships - Four candidate ships were selected for this study, representing the likely mix of visiting ships in future years. Actual ships and frequency of visits will be different. Nevertheless, this selection of ships is likely a reasonable approximation of the minimum port use patterns, and thus the most conservative assumption for cost-effectiveness evaluations.
- Cost of ship modification - A related assumption is that the cost of the ship modifications needed for shoreside power are assigned as if the Port of San Francisco were the only port at which the ships used shoreside power. Costs are NOT amortized over several ports. For this study, we assumed that the ships needing such conversion were doing so only because of the San Francisco program. However, if, for example, a single ship uses shoreside power at a port other than the Port of San Francisco, shipside modification costs should be halved for the purpose of this study. Thus, the results presented here are a "worst case" or conservative estimate of the cost effectiveness.
- Electrical Energy Provider – In assessing the overall cost effectiveness of shoreside electrification, the provider of the energy, the cost rate of that energy, and the allocation of the construction and operating costs for the shoreside portion of the project design

needs to be eventually determined. In carrying out this work, we could not, and did not establish firm electrical rates, nor did we determine who would likely bear the costs of various shoreside infrastructures. A range of rate structures estimated by PG&E for one vessel, and four-vessel cohort scenarios utilizing shoreside power were used in this study.

- Feasibility, not design and implementation – As noted previously, this is a feasibility study. If, upon the basis of this report and other information, it is decided to proceed with shoreside power provisions, full engineering design and cost analyses are yet to be carried out. Some of that would be done by the electricity provider, some by the transmission provider, some by the developer, and some by the ship owners.
- Safety – Installations elsewhere, in both cruise and industrial port areas have shown that safe movement of goods and people are not negatively affected by the shoreside power equipment.
- Service level – A characteristic of the Port of San Francisco is that many ships (and cruise lines) visit, but only a few visit often. The shoreside projects in Juneau, Alaska and Seattle, Washington, involve mainly one cruise line and a high number of ship calls.
- Shoreside infrastructure costing – Because this is a "conceptual" or "feasibility study", it was beyond the scope of this project to do detailed engineering design. Nevertheless, we did carry out general engineering design, based on similar installations elsewhere, to arrive at costs and general descriptions of the proposed facility. A significant uncertainty in this study relates to how the shoreside infrastructure cost in bringing electricity to the pier(s) should be allocated between the pier (concession operations, etc.) and the ship electricity demands through shoreside power. A careful examination of this requires a full scale power provider study to reconcile.

8.2 Conclusions

Shoreside auxiliary electrical power demand is estimated to be less than 12.5 MW for a single shoreside connection. This is consistent with demands in other ports with similar applications.

Hotelling with shoreside power with two ships simultaneously is technically possible and has also been examined in this study. Thus, certain provisions may be incorporated into the facility design, principally the under-pier electrical conduit and provision of adequate space for future step-down transformer expansion and electrical reel placement to accommodate a two-berth shoreside power system. However, the major effects of a two-berth shoreside power system may be an increase in the shoreside power infrastructure cost carried by the providing utility (increased feeder line capacity, additional or bigger transformer, additional reel assembly, etc.), as well as the need for additional space to accommodate the additional/larger transformer and electrical reel assembly. This possible increase in capacity should be examined further to determine if provisions should be made for this contingency.

The technical aspects of shoreside power have been examined and found to not present any unique issues to San Francisco that have not been addressed in actual installations in Seattle and Alaska. However, aesthetics and space management will have to be especially addressed at the Port of San Francisco.

Only one cruise line currently frequenting the Port of San Francisco has existing shoreside power experience and on-board equipment – Princess. It is estimated that other ships can be retrofitted at a cost of $500,000-700,000 per ship. However, if a single ship uses shoreside power at other

ports as well, the shipside modification costs would be reduced proportionally according to the number of ports where it uses shoreside power.

There are no known safety or passenger or cruise ship supply issues that cannot be addressed adequately based on installations elsewhere.

This study estimated that the shoreside capital cost for electricity supply to be in the range of $1.5 million to $3.0 million, with an approximate range of $600,000 to $1.5 million for on-pier electrical supply fixed costs, depending on the scenario considered. Within the cost estimates for the on-pier electric supply, the capital cost for a substation with a 12.5 MW transformer, and a double cable reel tower assembly was estimated to be about $300,000. However, this cost would be increased accordingly if more than 2 cables and/or larger transformer are used. The shoreside annual operation and maintenance cost, which would be mainly labor cost, was estimated to be approximately $140,000.

The main cost to cruise ship operators is the increased cost of the electrical power provided by the local utility as opposed to providing their own auxiliary power by way of at dock hotelling with their own engine/generator system. This study showed that this cost ranged up to 2 to 3 times self-generated electrical costs. In short, it costs the cruise industry more to use shoreside power while at port than shipboard generated electrical power. The study found that the "break-even" point for this portion of the cost was in the range of $0.05-0.10/kW-hr of provided electrical load.

Depending on ship size and frequency of visits, this study estimated that an annual cost of approximately $150,000 to $300,000 per ship for purchase of utility provided electricity. The potential annual fuel savings from using shoreside power for the example ships ranged from $35,000 to $70,000. Thus, the net annual increase in shipside operating costs ranged from $115,000 to $230,000 for the candidate ships studied.

Therefore, a key aspect of any future system must be a thorough examination of electrical rate structures available to the Port and ships. For this study, nominal rate structures of 0.141 $/kW-hr and 0.220 $/kW-hr provided by PG&E were used for the four ship cohort scenario and for one ship scenario, respectively. For comparison, other ports that have implemented or are implementing shoreside power report or anticipate energy rates in the range of 0.03 to 0.085 $/kW-hr. made possible via subsidizing by ports and/or city owned utilities.

Current methods of evaluating the "cost effectiveness" of various air pollutant emissions reductions control options in California often rely upon the so-called "Carl Moyer" program guidance. Cost effectiveness is usually expressed in terms of tons of air pollutant emissions reduced divided by the cost of the measure to accomplish that reduction. The upper end of the "acceptable" ratio for this metric under the Moyer program is approximately $14,000/ton of combined oxides of nitrogen and particulate matter.

Table 8-1. Summary of emission benefits and cost-effectiveness results of shoreside power.

	DAWN PRINCESS	REGAL PRINCESS	MERCURY	CRYSTAL HARMONY	2-Vessels	3-Vessels	4-Vessels
Emission Benefit Summary (tons/year)							
HC	0.22	0.20	0.40	0.16	0.41	0.82	0.98
CO	0.29	0.27	0.55	0.22	0.56	1.10	1.32
NOx	10.53	9.66	19.81	7.55	20.19	40.01	47.55
PM	0.68	0.62	1.28	0.07	1.30	2.58	2.65
SOx	7.95	7.29	14.96	0.47	15.24	30.20	30.67
(NOx + 10*PM)	17.3	15.9	32.6	8.2	33.2	65.8	74.1
Cost Effectiveness ($ per ton of NOx+10*PM reduced)							
Low Range	$13,890	$16,317	$10,237	$27,798	$10,129	$7,698	$5,456
High Range	$17,943	$21,366	$12,698	$37,540	$12,544	$9,069	$6,809

Notes/Major Assumptions:

1. Low Range eliminates 50% of the capital cost for landside construction because some electric power infrastructure must already be in place to bring power to the piers, and uses the low end of the shipside modification cost of $500,000.
2. High Range includes landside capital costs for an underground power transmission and distribution system and for on-pier infrastructure costs in the absence of any other construction, and uses the high end of the shipside modification cost of $700,000.
3. A discount rate of 4% was used in the analysis as per the Moyer guidelines. However, the actual discount rate may be substantially higher.
4. A useful life of 20 years was used in the analysis as per the Port's guidance.
5. Only NOx and PM emissions were used to calculate the cost effectiveness of shoreside power as per the Moyer guidelines, but shoreside power would also provide a SOx emission reduction benefit as well.
6. Emission reductions were calculated by subtracting emissions produced while connecting and disconnecting shoreside power and powerplant emissions from the total hotelling or berthing emissions.
7. The high end of the PG&E provided energy rates of 0.141 to 0.220 $/kW-hr was used per vessel, 2-vessels, and 3-vessels cases, and the low end of the range was used for the 4-vessels case.
8. The low end of a weighting factor of 10 to 30 for the PM emission reduction based on the Moyer guidelines was used in the cost-effectiveness calculation.
9. Negative emission benefits reflect the subtraction of powerplant emissions from on-board natural gas turbines. This primarily affects CO and, to a lesser extent, PM expected emissions reductions.

As shown in Table 8-1, shoreside power would provide about 8 to 20 tons per year of NOx emission reductions, and 0.05 to 1.3 tons per year of PM emission reductions per vessel, which was about 80% of the hotelling NOx and PM emissions from the example vessels examined in this study. The total shoreside power emission reduction from the example vessels was estimated to be about 50 tons/year of combined NOx and PM emission reductions or about 50% of the total hotelling emissions from all the cruise ships berthed at the Port in 2004. In addition to NOx and PM emissions, the SOx emission reduction from shoreside power from these vessels was estimated to be about 30 tons/year.

This emissions reduction is located at a point that is likely to have the most significant impact on the population of the Bay Area (as opposed to emissions reductions from ships in transit to or from the Port) due to the proximity to the exposed population.

As shown in Table 8-1, shoreside power provision examined in this study produced cost effectiveness values of 5,500 to 7,000 $/ton if all four ships examined are assumed to participate. However, if only one ship, or several ships with infrequent rates of call, are assumed, this cost effectiveness becomes much less attractive, quickly exceeding the Carl Moyer limit. Therefore, it is important that the program, to be cost effective, result in use by as many frequently visiting ships as possible.

In addition to shoreside power, alternative air emission control technologies, in tandem with one another or separately, were also evaluated for feasibility and cost effectiveness to reduce

hotelling emissions. Table 8-2 provides a summary of potential emission reductions and cost effectiveness of alternative controls that were deemed most feasible in terms of implementation. While they are feasible and cost effective, this study shows that more than one technology (i.e., MGO fuel with water injection or humid air, or MGO with water emulsion) must be employed to produce equivalent emission reductions and cost effectiveness to shoreside power.

Table 8-2. Summary of costs, emission reductions, and cost effectiveness of alternative control measures for four-vessel cohort scenario.

Control Measure	Capital Cost ($)	Operating Cost ($/call)	Emission Reductions and Cost Effectiveness		
			NOx (tons/yr., $/ton)	PM (tons/yr., $/ton)	NOx + 10PM (tons/yr., $/ton)
MGO fuel	$0	$6k	3.3, $86k	2.7, $90k	30.3, $8k
MGO with Water-Injection or Humid Air	$2000k	$6k	12.0, $22k	2.7, $97k	39.4. $7k
MGO with Water Emulsion	$1000k	$7-8k	10.8, $23k	2.9, $87k	40.2, $6k

Notes/Major Assumptions:

1. For the MGO Measure, capital costs could be incurred if extra fuel tanks must be added. Emission reduction is expected over the entire berthing time.
2. For the MGO with Water Injection or Humid Air Measure, capital costs could be more if many engines must be retrofitted (only one per vessel is assumed here); 20% NOx control is assumed; and emission reduction is expected over the entire berthing time.
3. For the MGO with Water Emulsion Measure, the estimate included a 14% NOx and 31% PM reduction (63% reduction of the organic portion of PM when using MGO fuel); and emission reduction is expected over the entire berthing time.
4. These control measures would reduce hotelling/berthing emissions, as well as transit emissions, but only berthing emissions were used in the calculation.

8.3 Recommendations for Further Study

The electrical rate structure must be fully vetted with the participation of the Port, Hetch-Hetchy, PG&E, and the PUC, as this is a critical element in determining actual cost-effectiveness.

Several government-funding options are potentially available to subsidize this type of program. These are described in this report and should be fully explored by the Port, the cruise lines, the electricity provider, air pollution agencies, and other stakeholders for application to this program.

PG&E should do a detailed electrical supply feasibility and cost estimate study to determine the cost of implementing shoreside power.

A re-examination of future ship use at the port, including an updated characterization of those ships' applicability to shoreside power should be undertaken to assure that assumptions made in this study hold as the implementation date becomes more certain.

The Port of San Francisco should work with other West Coast ports to better assure equity of treatment of cruise ships, so that no port is penalized (through loss of business) for implementing progressive air pollution control measures such as shoreside power.

9. REFERENCES

ACTI. 2005. Personal communication with Sal Caro and Matt Stewart of Advanced Control Technology Incorporated (ACTI), March, 2005.

ARB. 2005. "PM Emissions and Fuel Sulfur Content," public presentation by Paul Milkey, May 18, 2005.

ARB. 2005. "Proposed Project Criteria," Carl Moyer Program Agricultural Assistance Program August 2005.

Arcadis. 1999. "Marine Vessels Emissions Inventory," Prepared for the South Coast Air Quality Management District, ARCADIS Geraghty & Miller, September 23, 1999.

BAH. 1991. 'Commercial Marine Vessel Contributions to Emission Inventories,' Final Report prepared for EPA, Booz-Allen & Hamilton, October 7, 1991.

Cooper, D.A. 2001. "Exhaust emissions from high speed passenger ferries," *Atmos. Env*., v35, pp 4189-4200.

Cooper D.A. 2003. "Exhaust emissions from ships at berth," *Atmos. Env*., v 37, pp 3817-3830.

ENTEC. 2002. 'Quantification of Emissions from Ships Associated with Ship Movements Between Ports in the European Community,' Prepare for the European Commission by ENTEC UK Limited, July 2002.

ENVIRON. 2002. "Commercial Marine Emission Inventory Development," E.H. Pechan and Associates, Inc. and ENVIRON International Corporation, April, 2002. Air Docket A-2001-11, item II-A-67.

ENVIRON. 2004. "Cold Ironing Cost Effectiveness," Prepared for the Port of Long Beach, March 30, 2004

Environment Canada. 1997. 'Port of Vancouver Marine Vessel Emissions Test Report, Final Report," ERMD Report #97-04, presumably 1997.

Environment Canada. 1999. Ferry Engine Emissions, personal communication with Greg Rideout.

EPA. 2003. "Final Regulatory Support Document: Control of Emissions from New Marine Compression-Ignition Engines at or Above 30 Liters per Cylinder," Environmental Protection Agency US EPA420-R-03-004, January 2003.

EPA. 2002. 'Exhaust Emission Factors for Nonroad Engine Modeling--Compression-Ignition,' NONROAD Model Report No. NR-009b, EPA420-P-02-016, November 2002.

EPA. 2000. "Analysis of Commercial Marine Vessels Emissions and Fuel Consumption Data," Prepared for EPA under contract to Sierra Research by Energy and Environmental Analysis, Inc., EPA420-R-00-002, February 2000.

EPA. 1999a. 'Control Of Air Pollution From Marine Compression-Ignition Engines' Part 94, Code of Federal Regulations, December, 1999. Published in the Federal Register December 29, 1999.

EPA. 1999b. 'Final Regulatory Impact Analysis: Control of Emissions from Compression-Ignition Marine Engines,' US EPA420-R-99-026, November, 1999.

ETC. 1997. 'Shipboard Marine Engines Emission Testing for the United States Coast Guard,' Prepared for the Volpe National Transportation Systems Center and the United States Coast Guard by Environmental Transportation Consultants under Delivery Order No. 31, presumably 1997.

Fleischer, F., E.J. Ulrich, R. Krapp, and W. Grundmann. 1998. "Comments on particulate emissions from diesel engines when burning heavy Fuels," Conference paper: CIMAC, Proc. of the 22nd CIMAC Internat. Congress on Combustion Engines, Volume 6, Copenhagen, DK, May 18-21, 1998.

IVL. 2004. "Methodology for Calculating Emissions from Ships: 1 Update on Emission Factors," Prepared for the Swedish Environmental Protection Agency by IVL Swedish Environmental Research Institute, February 2004.

Lloyds. 1995. 'Marine Exhaust Emissions Research Programme,'; 'Steady-state Operation,' 1990; 'Slow Speed Addendum,' 1991; 'Marine Exhaust Emissions Research Programme,' 1995; Lloyds Register Engineering Services, Croyden, Lloyds Register of Shipping, London.

Lloyds. 2004. 'Lloyds' Register of Ships Version 2.17. October 2004, Lloyds Register of Shipping, London.

PoSF. 2004. 2004 and 2005 Cruise Ship Port Call Data (2004 San Francisco Schedule 9-7-04.xls and 2005 San Francisco Schedule 9-1-04.XLS) provided by John Doll of the Port of San Francisco to David Souten of ENVIRON, September 2004.

POSF. 2001. "San Francisco Cruise Terminal Mixed-Use Project & Brannan Street Wharf Project Draft SEIR," Port of San Francisco Case No. 2000.1229E, June 2001.

Samulski. 2000. US EPA Staff, personal communication, April 5, 1999.

Seaworthy Systems, Inc. 2001-updated. 'Fuel Cost Estimates,' developed for the California Air Resources Board, United States Maritime Administration, and the following merchant marine companies: Matson Navigation Company, Chevron Texaco Shipping Company, American President Lines, and Sea River Shipping Inc., 2001 to present.

SFBP. 2005. Personal communication with Ken Levin, June 10, 2005. San Francisco Bar Pilots.

Starcrest. 2004. "Port-Wide Baseline Air Emission Inventory," Prepared for the Port of Los Angeles by Starcrest Consulting, June 2004.

TRC. 1989. 'Ship Emissions Control Study for the Ports of Long Beach and Los Angeles, Volume I Marine Vessel Emissions While Hotelling in Port,' Prepared for the Ports of Long Beach and Los Angeles, South Coast Air Quality Management District, and Western States Petroleum Association, December, 1989.

Zeller, W. 2005-1. Email from Mike Waugh of ARB to William Zeller of PG&E, August 25, 2005.

Zeller, W. 2005-2. Personal communication, July 20, 2005.

Attachment E

Information Supporting Shell's Request For Load Monitor

Shell Power and Flow monitoring system.

The Shell Power and Flow monitoring hardware consists of two pieces (Pic1), a controller and a logger. This is true for all but the Fennica and Tor Viking. The Fennica had an existing software package with Dewetron EPAD signal conditioning. This software was replaced to match the rest of the vessels. The Tor Viking also had an existing system that the data was pulled into the new software.

1. The controller is a rugged Dewetron industrial laptop with battery backup of about two hours.
2. The logger is a Graphtec GL500A connected to the controller via USB2 cable.

Pic1. Dewe-3108 with GL500A.

The Shell Power and Flow monitoring software was written with maximum flexibility with one software package for all 6 vessels. The instructions for this software is in appendix A.. The only instruction that no longer needs to be followed is sending me the data.

The data that we get from the engines comes off the existing power monitoring systems. This consists of KW, Amp and fuel rack position gauges. These are the exact same gauges that were used to initially do the NOx testing (included spreadsheet). The data comes off of these gauges as volts or amps and is wired directly to the data logger. The software pulls the data directly off the logger and scales the data into %Load. This is done to match with the NOx testing that everything is based on (spreadsheet). The NOx is calculated every 15 seconds off of the converted %Load. The advantage of this over the initial plan is a much more accurate value of the NOx emissions.

The data comes out in three different formats. The first is a text document of all the data values in 15 second intervals. The second is another text document of all the values in 15 minute intervals. The third is a group of pictures of each individual %Load graph and one of all channels at the end of the day. This data is written to a jump drive that needs to be pulled during a certain time of the day.

The desired data is then transferred to the people who need it.

If future systems are needed the hardware would be reduced to one rugged Dewetron system (Pic2) with internal data logging capabilities. This system would also use the existing software package. The software would only have to be modified to include new vessels.

Pic2. Dewe-3201 with 16 internal channels.

Andrew W. Nowicki
Sr. Application Engineer
Phone: 419-213-0282
email: andrew.nowicki@dewamerica.com

Appendix A.

SHELL NOx monitoring system instructions

STEP 1:

Turn Datalogger on with switch on the right side of unit. Wait until the white graph screen appears. Step not needed for Fennica and Tor Viking.

STEP 2:

Turn on computer with the button on the left in front of the screen. Wait for system to completely boot. This will be different for the Fennica and Tor Viking.

STEP 3:

Select the ship that you are on, and press the checkbox to the right.

STEP 4:

Press the checkbox next to the monitoring selection and then the Setup Complete button.

STEP 5:

Between 23:00:00 hours and 24:00:00 input flows must be put into the Input Flow section. You get to this section by pressing the Input Flow button in the lower right hand section of the screen. All ships must input the total consumption of the ship. However all ships have their specific instructions for the other flow inputs.

This must be done every day between 23:00 hours and 24:00 hours!

STEP 6:

The person responsible for sending the data must remove the memory stick between 00:00 hours and 12:00 hours. Only one file needs to be sent. The file that needs to be sent will have the form of

mm-dd-yy_Ships name_monitoring style_15m.txt

This file needs to be emailed to the following addresses every day before 12:00

Suman.Muddusetti@Shell.com

Andrew.Nowicki@Dewamerica.com

STEP 7:

Return and insert memory stick back into the Data Computer.

WARNING!!

This computer must not be used for anything else.

DIESEL GENERATOR SET

CATERPILLAR®

Image shown may not reflect actual package.

ESP

550 ekW 688 kVA
60 Hz 1800 rpm 480 Volts

Caterpillar is leading the power generation marketplace with Power Solutions engineered to deliver unmatched flexibility, expandability, reliability, and cost-effectiveness.

FEATURES

FUEL/EMISSIONS STRATEGY
- EPA Tier 2

RATING
- Rated for Emergency Standby Power (ESP) per ISO8528 • 200 Hours / year operation

DESIGN CRITERIA
- The generator set accepts 100% rated load in one step per NFPA 110 and meets ISO 8528-5 transient response.

UL 2200
- UL 2200 listed packages available. Certain restrictions may apply. Consult with your Caterpillar Dealer.

FULL RANGE OF ATTACHMENTS
- Wide range of bolt-on system expansion attachments, factory designed and tested
- Flexible packaging options for easy and cost effective installation

SINGLE-SOURCE SUPPLIER
- Fully prototype tested with certified torsional vibration analysis available

WORLDWIDE PRODUCT SUPPORT
- Cat® dealers provide extensive post sale support including maintenance and repair agreements
- Cat dealers have over 1,600 dealer branch stores operating in 200 countries
- The Cat S•O•S℠ program cost effectively detects internal engine component condition, even the presence of unwanted fluids and combustion by-products

CAT® C15 ATAAC DIESEL ENGINE
- Utilizes ACERT™ Technology
- Reliable, rugged, durable design
- Field-proven in thousands of applications worldwide
- Four-stroke diesel engine combines consistent performance and excellent fuel economy with minimum weight
- Electronic engine control

CAT GENERATOR
- Matched to the performance and output characteristics of Cat engines
- Load adjustment module provides engine relief upon load impact and improves load acceptance and recovery time
- UL 1446 Recognized Class H insulation

CAT EMCP 3 SERIES CONTROL PANELS
- Simple user friendly interface and navigation
- Scalable system to meet a wide range of customer needs
- Integrated Control System and Communications Gateway

FACTORY INSTALLED STANDARD & OPTIONAL EQUIPMENT

System	Standard	Optional
Air Inlet	• Light Duty Air filter	[ ] Canister Style Air Cleaners [ ] Air Cleaner - single stage [ ] Dual element [ ] Heavy duty
Cooling	• Radiator package mounted(50ºC) • Coolant drain line with valve terminated at edge of base • Fan and belt guards • Coolant level sight gauge • Caterpillar Extended Life Coolant	[ ] Radiator removal [ ] Radiator duct flange & guard
Exhaust	• Dry exhaust manifold • Flanged faced outlets • Stainless Steel Flex with split-cuff connection	[ ] Mufflers [ ] Manifold & Turbocharger guards [ ] Elbows
Fuel	• Primary fuel filter with integral water separator • Secondary fuel filters • Fuel priming pump • Engine fuel transfer pump • Flex fuel lines • Fuel cooler* *Not included with packages without radiators	[ ] Integral UL listed fuel tank base [ ] Manual transfer pump [ ] Fuel level switch
Generator	• Class H insulation • R448 voltage regulator with load adjustment module • IP23 Protection	[ ] CDVR with KVAR/PF control [ ] Oversize and premium generators [ ] Bearing/Stator temperature detection (premium generator) [ ] 3 phase sensing [ ] Anti-condensation space heaters [ ] Cable access box [ ] Reactive droop
Power Termination	• Power Terminator Strips Mounted inside Power Center • Segregated low voltage wiring panel	[ ] Circuit breakers, UL listed, 3 pole [ ] Circuit breakers, IEC compliant, 3 pole [ ] Circuit breaker Shunt trip [ ] Circuit breaker auxillary contact [ ] Top & bottom power cable entry [ ] Floor standing UL breakers
Governor	• ADEM™A4	[ ] Load share module
Control Panels	• EMCP 3.1 (rear mounted) • Speed adjust • Emergency stop pushbutton • Voltage adjust	[ ] EMCP 3.2 & EMCP 3.3 (can be RH mounted) [ ] Local annuniciator modules (NFPA 99/110) [ ] Remote annunicator modules (NFPA 99/110) [ ] Discrete I/O module
Lube	• Lubricating oil and filter • Oil drain line with valves • Fumes disposal • Gear type lube oil pump	[ ] Manual sump pump
Starting/Charging	• 24 volt starting motor • Battery with rack and cables (dry) • 45 amp charging alternator	[ ] Jacket water heater with shut off valves [ ] Block heater [ ] Ether starting aids [ ] Battery disconnect switch [ ] Battery chargers (5 & 10 amp) [ ] Oversized batteries
General	• Paint - Caterpillar yellow except rails and radiators gloss black • Flywheel and flywheel housing - SAE No.1	

SPECIFICATIONS

CAT GENERATOR

Frame size.....LC6114G
Excitation..... Self Excitation
Pitch.....0.6667
Number of poles.....4
Number of bearings..... Single Bearing
Number of Leads.....12
Insulation..... UL 1446 Recognized Class H with tropicalization and antiabrasion
- Consult your Caterpillar dealer for available voltages
IP Rating.....IP23
Alignment.....Pilot Shaft
Overspeed capability..... 125% of rated
Wave form Deviation (Line to Line).....2%
Voltage regulator..... Single phase sensing with selectible volts/Hz
Voltage regulation.....Less than +/- 1/2% (steady state)
Less than +/- ½% (w/ 3% speed change)
Telephone influence factor.....Less than 50
Harmonic Distortion.....Less than 5%

CAT DIESEL ENGINE

C15 ATAAC, L-6, 4-stroke water-cooled diesel
Bore..... 137.20 mm (5.4 in)
Stroke..... 171.40 mm (6.75 in)
Displacement.....15.20 L (927.56 in^3)
Compression Ratio..... 16.1:1
Aspiration..... ATAAC
Fuel System.....MEUI
Governor Type..... Caterpillar ADEM control system

CAT EMCP 3 SERIES CONTROLS

- EMCP 3.1 (Standard)
- EMCP 3.2 / EMCP 3.3 (Option)
- Single location customer connector point
- True RMS metering, 3-phase
- Controls
  - Run / Auto / Stop control
  - Speed Adjust
  - Voltage Adjust
  - Emergency Stop Pushbutton
  - Engine cycle crank
- Digital Indication for:
  - RPM
  - Operating hours
  - Oil Pressure
  - Coolant temperature
  - System DC volts
  - L-L volts, L-N volts, phase amps, Hz
  - ekW, kVA, kVAR, kW-hr, %kW, PF (EMCP 3.2 / 3.3)
- Shutdowns with common indicating light for:
  - Low oil pressure
  - High coolant temperature
  - Low coolant level
  - Overspeed
  - Emergency stop
  - Failure to start (overcrank)
- Programmable protective relaying functions: (EMCP 3.2 & 3.3)
  - Under and over voltage
  - Under and over frequency
  - Overcurrent (time and inverse time)
  - Reverse power (EMCP 3.3)
- MODBUS isolated data link, RS-485 half-duplex (EMCP 3.2 & 3.3)
- Options
  - Vandal door
  - Local annunciator module
  - Remote annunciator module
  - Input / Output module
  - RTD / Thermocouple Modules
  - Monitoring software

TECHNICAL DATA

Open Generator Set - - 1800 rpm/60 Hz/480 Volts	DM8157	
Tier 2		
Generator Set Package Performance		
Genset Power rating @ 0.8 pf	687.5 kVA	
Genset Power rating with fan	550 ekW	
Fuel Consumption		
100% load with fan	153.8 L/hr	40.6 Gal/hr
75% load with fan	115.6 L/hr	30.5 Gal/hr
50% load with fan	90.5 L/hr	23.9 Gal/hr
Cooling System[1]		
Air flow restriction (system)	0.12 kPa	0.48 in. water
Air flow (max @ rated speed for radiator arrangement)	822 m^3/min	29029 cfm
Engine Coolant capacity with radiator/exp. tank	57.8 L	15.3 gal
Engine coolant capacity	20.8 L	5.5 gal
Radiator coolant capacity	37.0 L	9.8 gal
Inlet Air		
Combustion air inlet flow rate	43.6 m^3/min	1539.7 cfm
Exhaust System		
Exhaust stack gas temperature	514.4 ° C	957.9 ° F
Exhaust gas flow rate	121.8 m^3/min	4301.3 cfm
Exhaust flange size (internal diameter)	152.4 mm	6.0 in
Exhaust system backpressure (maximum allowable)	6.8 kPa	27.3 in. water
Heat Rejection		
Heat rejection to coolant (total)	207 kW	11772 Btu/min
Heat rejection to exhaust (total)	546 kW	31051 Btu/min
Heat rejection to atmosphere from engine	115 kW	6540 Btu/min
Heat rejection to atmosphere from generator	32.6 kW	1854.0 Btu/min
Alternator[2]		
Motor starting capability @ 30% voltage dip	1445 skVA	
Frame	LC6114G	
Temperature Rise	130 ° C	234 ° F
Emissions (Nominal)[3]		
NOx g/hp-hr	5.07 g/hp-hr	
CO g/hp-hr	.29 g/hp-hr	
HC g/hp-hr	.01 g/hp-hr	
PM g/hp-hr	.018 g/hp-hr	

[1] For ambient and altitude capabilities consult your Caterpillar dealer. Air flow restriction (system) is added to existing restriction from factory.
[2] Generator temperature rise is based on a 40° C (104° F) ambient per NEMA MG1-32.
[3] Emissions data measurement procedures are consistent with those described in EPA CFR 40 Part 89, Subpart D & E and ISO8178-1 for measuring HC, CO, PM, NOx. Data shown is based on steady state operating conditions of 77°F, 28.42 in HG and number 2 diesel fuel with 35° API and LHV of 18,390 btu/lb. The nominal emissions data shown is subject to instrumentation, measurement, facility and engine to engine variations. Emissions data is based on 100% load and thus cannot be used to compare to EPA regulations which use values based on a weighted cycle.

RATING DEFINITIONS AND CONDITIONS

Meets or Exceeds International Specifications: AS1359, CSA, IEC60034-1, ISO3046, ISO8528, NEMA MG 1-22, NEMA MG 1-33, UL508A, 72/23/EEC, 98/37/EC, 2004/108/EC

Emergency Standby Power (ESP) - Output available with varying load for the duration of an emergency outage. Average power output is 70% of the standby power rating. Typical operation is 50 hours per year, with maximum expected usage of 200 hours per year. Standby power in accordance with ISO8528. Fuel stop power in accordance with ISO3046. Standby ambients shown indicate ambient temperature at 100% load which results in a coolant top tank temperature just below the shutdown temperature.

Ratings are based on SAE J1349 standard conditions. These ratings also apply at ISO3046 standard conditions. **Fuel rates** are based on fuel oil of 35° API [16° C (60° F)] gravity having an LHV of 42 780 kJ/kg (18,390 Btu/lb) when used at 29° C (85° F) and weighing 838.9 g/liter (7.001 lbs/U.S. gal.). Additional ratings may be available for specific customer requirements, contact your Caterpillar representative for details. For information regarding Low Sulfur fuel and Biodiesel capability, please consult your Caterpillar dealer.

DIMENSIONS

Package Dimensions		
Length	**3775.1 mm**	**148.63 in**
Width	**1110.0 mm**	**43.7 in**
Height	**2091.0 mm**	**82.32 in**
Weight	**3930 kg**	**8,664 lb**

NOTE: For reference only - do not use for installation design. Please contact your local dealer for exact weight and dimensions. (General Dimension Drawing #2781051).

Performance No.: DM8157

Feature Code: C15DE6V

Gen. Arr. Number: 2351215

Source: U.S. Sourced

November 16 2009 15327471

www.CAT-ElectricPower.com

© 2009 Caterpillar
All rights reserved.

Materials and specifications are subject to change without notice. The International System of Units (SI) is used in this publication.

CAT, CATERPILLAR, SAFETY.CAT.COM their respective logos, "Caterpillar Yellow," and the POWER EDGE trade dress, as well as corporate and product identity used herein, are trademarks of Caterpillar and may not be used without permission.

DIESEL GENERATOR SET

CATERPILLAR®

Image shown may not reflect actual package.

STANDBY
400 ekW 500 kVA
60 Hz 1800 rpm 480 Volts

Caterpillar is leading the power generation marketplace with Power Solutions engineered to deliver unmatched flexibility, expandability, reliability, and cost-effectiveness.

FEATURES

FUEL/EMISSIONS STRATEGY
- EPA Tier 3

DESIGN CRITERIA
- The generator set accepts 100% rated load in one step per NFPA 110 and meets ISO 8528-5 transient response.

UL 2200
- UL 2200 listed packages available. Certain restrictions may apply. Consult with your Caterpillar Dealer.

FULL RANGE OF ATTACHMENTS
- Wide range of bolt-on system expansion attachments, factory designed and tested
- Flexible packaging options for easy and cost effective installation

SINGLE-SOURCE SUPPLIER
- Fully prototype tested with certified torsional vibration analysis available

WORLDWIDE PRODUCT SUPPORT
- Cat® dealers provide extensive post sale support including maintenance and repair agreements
- Cat dealers have over 1,600 dealer branch stores operating in 200 countries
- The Cat S•O•S℠ program cost effectively detects internal engine component condition, even the presence of unwanted fluids and combustion by-products

CAT® C15 ATAAC DIESEL ENGINE
- Utilizes ACERT™ Technology
- Reliable, rugged, durable design
- Field-proven in thousands of applications worldwide
- Four-stroke diesel engine combines consistent performance and excellent fuel economy with minimum weight
- Electronic engine control

CAT GENERATOR
- Matched to the performance and output characteristics of Cat engines
- Load adjustment module provides engine relief upon load impact and improves load acceptance and recovery time
- UL 1446 Recognized Class H insulation

CAT EMCP 3 SERIES CONTROL PANELS
- Simple user friendly interface and navigation
- Scalable system to meet a wide range of customer needs
- Integrated Control System and Communications Gateway

FACTORY INSTALLED STANDARD & OPTIONAL EQUIPMENT

System	Standard	Optional
Air Inlet	• Light Duty Air filter	[ ] Canister Style Air Cleaners [ ] Air Cleaner - single stage [ ] Dual element [ ] Heavy duty
Cooling	• Radiator package mounted(50ºC) • Coolant drain line with valve terminated at edge of base • Fan and belt guards • Coolant level sight gauge • Caterpillar Extended Life Coolant	[ ] Radiator removal [ ] Radiator duct flange & guard
Exhaust	• Dry exhaust manifold • Flanged faced outlets • Stainless Steel Flex with split-cuff connection	[ ] Mufflers [ ] Manifold & Turbocharger guards [ ] Elbows
Fuel	• Primary fuel filter with integral water separator • Secondary fuel filters • Fuel priming pump • Engine fuel transfer pump • Flex fuel lines • Fuel cooler* *Not included with packages without radiators	[ ] Integral UL listed fuel tank base [ ] Manual transfer pump [ ] Fuel level switch
Generator	• Class H insulation • R448 voltage regulator with load adjustment module • IP23 Protection	[ ] CDVR with KVAR/PF control [ ] Oversize and premium generators [ ] Bearing/Stator temperature detection (premium generator) [ ] 3 phase sensing [ ] Anti-condensation space heaters [ ] Cable access box [ ] Reactive droop
Power Termination	• Power Terminator Strips Mounted inside Power Center • Segregated low voltage wiring panel	[ ] Circuit breakers, UL listed, 3 pole [ ] Circuit breakers, IEC compliant, 3 pole [ ] Circuit breaker Shunt trip [ ] Circuit breaker auxillary contact [ ] Top & bottom power cable entry [ ] Floor standing UL breakers
Governor	• ADEM™A4	[ ] Load share module
Control Panels	• EMCP 3.1 (rear mounted) • Speed adjust • Emergency stop pushbutton • Voltage adjust	[ ] EMCP 3.2 & EMCP 3.3 (can be RH mounted) [ ] Local annuniciator modules (NFPA 99/110) [ ] Remote annunicator modules (NFPA 99/110) [ ] Discrete I/O module
Lube	• Lubricating oil and filter • Oil drain line with valves • Fumes disposal • Gear type lube oil pump	[ ] Manual sump pump
Starting/Charging	• 24 volt starting motor • Battery with rack and cables (dry) • 45 amp charging alternator	[ ] Jacket water heater with shut off valves [ ] Block heater [ ] Ether starting aids [ ] Battery disconnect switch [ ] Battery chargers (5 & 10 amp) [ ] Oversized batteries
General	• Paint - Caterpillar yellow except rails and radiators gloss black • Flywheel and flywheel housing - SAE No.1	

SPECIFICATIONS

CAT GENERATOR

Frame size..... LC6114B
Excitation..... Self Excitation
Pitch.....0.6667
Number of poles.....4
Number of bearings..... Single Bearing
Number of Leads..... 12
Insulation..... UL 1446 Recognized Class H with tropicalization and antiabrasion
- Consult your Caterpillar dealer for available voltages
IP Rating.....IP23
Alignment.....Pilot Shaft
Overspeed capability..... 125% of rated
Wave form Deviation (Line to Line).....2%
Voltage regulator..... Single phase sensing with selectible volts/Hz
Voltage regulation.....Less than +/- 1/2% (steady state)
Less than +/- ½% (w/ 3% speed change)
Telephone influence factor.....Less than 50
Harmonic Distortion.....Less than 5%

CAT DIESEL ENGINE

C15 ATAAC, L-6, 4-stroke water-cooled diesel
Bore..... 137.20 mm (5.4 in)
Stroke..... 171.40 mm (6.75 in)
Displacement.....15.20 L (927.56 in^3)
Compression Ratio..... 16.1:1
Aspiration..... ATAAC
Fuel System.....MEUI
Governor Type..... Caterpillar ADEM control system

CAT EMCP 3 SERIES CONTROLS

- EMCP 3.1 (Standard)
- EMCP 3.2 / EMCP 3.3 (Option)
- Single location customer connector point
- True RMS metering, 3-phase
- Controls
  - Run / Auto / Stop control
  - Speed Adjust
  - Voltage Adjust
  - Emergency Stop Pushbutton
  - Engine cycle crank
- Digital Indication for:
  - RPM
  - Operating hours
  - Oil Pressure
  - Coolant temperature
  - System DC volts
  - L-L volts, L-N volts, phase amps, Hz
  - ekW, kVA, kVAR, kW-hr, %kW, PF (EMCP 3.2 / 3.3)
- Shutdowns with common indicating light for:
  - Low oil pressure
  - High coolant temperature
  - Low coolant level
  - Overspeed
  - Emergency stop
  - Failure to start (overcrank)
- Programmable protective relaying functions: (EMCP 3.2 & 3.3)
  - Under and over voltage
  - Under and over frequency
  - Overcurrent (time and inverse time)
  - Reverse power (EMCP 3.3)
- MODBUS isolated data link, RS-485 half-duplex (EMCP 3.2 & 3.3)
- Options
  - Vandal door
  - Local annunciator module
  - Remote annunciator module
  - Input / Output module
  - RTD / Thermocouple Modules
  - Monitoring software

TECHNICAL DATA

Open Generator Set - - 1800 rpm/60 Hz/480 Volts	DM8151	
Tier 3		
Generator Set Package Performance		
Genset Power rating @ 0.8 pf	500 kVA	
Genset Power rating with fan	400 ekW	
Fuel Consumption		
100% load with fan	120.6 L/hr	31.9 Gal/hr
75% load with fan	97.5 L/hr	25.8 Gal/hr
50% load with fan	72.0 L/hr	19.0 Gal/hr
Cooling System[1]		
Air flow restriction (system)	0.12 kPa	0.48 in. water
Air flow (max @ rated speed for radiator arrangement)	720 m^3/min	25427 cfm
Engine Coolant capacity with radiator/exp. tank	57.8 L	15.3 gal
Engine coolant capacity	20.8 L	5.5 gal
Radiator coolant capacity	37.0 L	9.8 gal
Inlet Air		
Combustion air inlet flow rate	38.5 m^3/min	1359.6 cfm
Exhaust System		
Exhaust stack gas temperature	487.7 ° C	909.9 ° F
Exhaust gas flow rate	103.5 m^3/min	3655.1 cfm
Exhaust flange size (internal diameter)	152.4 mm	6.0 in
Exhaust system backpressure (maximum allowable)	6.8 kPa	27.3 in. water
Heat Rejection		
Heat rejection to coolant (total)	165 kW	9384 Btu/min
Heat rejection to exhaust (total)	445 kW	25307 Btu/min
Heat rejection to atmosphere from engine	105 kW	5971 Btu/min
Heat rejection to atmosphere from generator	29.2 kW	1660.6 Btu/min
Alternator[2]		
Motor starting capability @ 30% voltage dip	880 skVA	
Frame	LC6114B	
Temperature Rise	150 ° C	270 ° F
Emissions (Nominal)[3]		
NOx g/hp-hr	3.49 g/hp-hr	
CO g/hp-hr	.35 g/hp-hr	
HC g/hp-hr	.04 g/hp-hr	
PM g/hp-hr	.034 g/hp-hr	

[1] For ambient and altitude capabilities consult your Caterpillar dealer. Air flow restriction (system) is added to existing restriction from factory.
[2] Generator temperature rise is based on a 40° C (104° F) ambient per NEMA MG1-32.
[3] Emissions data measurement procedures are consistent with those described in EPA CFR 40 Part 89, Subpart D & E and ISO8178-1 for measuring HC, CO, PM, NOx. Data shown is based on steady state operating conditions of 77°F, 28.42 in HG and number 2 diesel fuel with 35° API and LHV of 18,390 btu/lb. The nominal emissions data shown is subject to instrumentation, measurement, facility and engine to engine variations. Emissions data is based on 100% load and thus cannot be used to compare to EPA regulations which use values based on a weighted cycle.

RATING DEFINITIONS AND CONDITIONS

Meets or Exceeds International Specifications: AS1359, CSA, IEC60034-1, ISO3046, ISO8528, NEMA MG 1-22, NEMA MG 1-33, UL508A, 72/23/EEC, 98/37/EC, 2004/108/EC

Standby - Output available with varying load for the duration of the interruption of the normal source power. Average power output is 70% of the standby power rating. Typical operation is 200 hours per year, with maximum expected usage of 500 hours per year. Standby power in accordance with ISO8528. Fuel stop power in accordance with ISO3046. Standby ambients shown indicate ambient temperature at 100% load which results in a coolant top tank temperature just below the shutdown temperature.

Ratings are based on SAE J1349 standard conditions. These ratings also apply at ISO3046 standard conditions.

Fuel rates are based on fuel oil of 35° API [16° C (60° F)] gravity having an LHV of 42 780 kJ/kg (18,390 Btu/lb) when used at 29° C (85° F) and weighing 838.9 g/liter (7.001 lbs/U.S. gal.). Additional ratings may be available for specific customer requirements, contact your Caterpillar representative for details. For information regarding Low Sulfur fuel and Biodiesel capability, please consult your Caterpillar dealer.

DIMENSIONS

Package Dimensions		
Length	**3775.1 mm**	**148.63 in**
Width	**1110.0 mm**	**43.7 in**
Height	**2091.0 mm**	**82.32 in**
Weight	**3339 kg**	**7,361 lb**

NOTE: For reference only - do not use for installation design. Please contact your local dealer for exact weight and dimensions. (General Dimension Drawing #2781050).

© 2009 Caterpillar
All rights reserved.

Materials and specifications are subject to change without notice. The International System of Units (SI) is used in this publication.

CAT, CATERPILLAR, SAFETY.CAT.COM their respective logos, "Caterpillar Yellow," and the POWER EDGE trade dress, as well as corporate and product identity used herein, are trademarks of Caterpillar and may not be used without permission.

DIESEL GENERATOR SET

CATERPILLAR®

Image shown may not reflect actual package

STANDBY
1000 ekW 1250 kVA
60 Hz 1800 rpm 480 Volts

Caterpillar® is leading the power generation market place with power solutions engineered to deliver unmatched flexibility, expandability, reliability, and cost-effectiveness.

FEATURES

FUEL/EMISSIONS STRATEGY
- EPA Tier 2

DESIGN CRITERIA
- The generator set accepts 100% rated load in one step per NFPA 110 and meets ISO 8528-5 transient response.

FULL RANGE OF ATTACHMENTS
- Wide range of bolt-on system expansion attachments, factory designed and tested
- Flexible packaging options for easy and cost effective installation

SINGLE-SOURCE SUPPLIER
- Fully prototype tested with certified torsional vibration analysis available

WORLDWIDE PRODUCT SUPPORT
- Caterpillar® dealers provide extensive post sale support including maintenance and repair agreements
- Caterpillar dealers have over 1600 dealer branch stores operating in 200 countries.
- The Cat® SOS℠ program effectively detects internal engine component condition, even the presence of unwanted fluids and combustion by products.

CAT C32 ATAAC DIESEL ENGINE
- Utilizes ACERT™ Technology
- Reliable, rugged, durable design
- Four-stroke diesel engine combines consistent performance and excellent fuel economy with minimum weight
- Electronic engine control

CAT GENERATOR
- Matched to the performance and output characteristics of Caterpillar engines
- Single point access to accessory connections
- UL 1446 Recognized Class H insulation

CAT EMCP3 CONTROL PANELS
- Simple user friendly interface and navigation
- Scalable system to meet a wide range of customer needs
- Integrated Control System and Communications Gateway

FACTORY INSTALLED STANDARD & OPTIONAL EQUIPMENT

System	Standard	Optional
Air Inlet	• Single element canister type air cleaner with service indicator	• Dual element air cleaners • Air inlet adapters
Cooling	• Radiator with guard (43ºC) • Low profile (frontal area) • Low airflow • Coolant drain line with valve • Fan and belt guards • Caterpillar Extended Life Coolant • Coolant level sensors • Radiator duct flange	
Exhaust	• Dry exhaust manifold • Flanged faced outlets	• Mufflers • Stainless steel exhaust flex fittings • Elbows, flanges, expanders & Y adapters
Fuel	• Primary fuel filter with water separator • Secondary fuel filter • Fuel priming pump • Flexible fuel lines • Fuel cooler	
Generator	• 3 Phase brushless, Salient pole • Class H insulation • CAT digital voltage regulator (CDVR) with VAR/PF control, 3-phase sensing • Bus bar connections • Winding temperature detectors	• Oversize & premium generators • Anti-condensation space heaters
Power Termination	•Bus bar (NEMA and IEC mechanical lug holes) •Top cable entry	• Circuit breakers, UL listed, 3 pole shunt trip, 100% rated, choice of trip units, manual or electrically operated (low voltage only) • Circuit breakers, IEC compliant, 3 or 4 pole with shunt trip (low voltage only), choice of trip units, manual or electrically operated • Right, left, and/or rear cable access with top or bottom cable entry
Governor	• ADEM™ A4	• Load share module
Control Panel	• EMCP 3.1 • User Interface panel (UIP) - rear mount • Emergency Stop Push button	• EMCP 3.2 and EMCP 3.3 • Right or left mount UIP • Local & remote annunciator modules • Discrete I/0 Module • Generator temperature monitoring & protection
Lube	• Lubricating oil and filter • Oil drain line with valves • Fumes disposal • Gear type lube oil pump	• Deep sump oil pan
Mounting	• Rails - engine / generator / radiator mounting • Anti-vibration mounts (shipped loose)	• Isolator removal • Spring type vibration isolator
Starting / Charging	• 24 volt starting motor(s) • Batteries with rack and cables • Battery disconnect switch	• Battery chargers (10 Amp) • 45 amp charging alternator • Oversize batteries • Ether starting aid
General	• Right-hand service • Paint - Caterpillar Yellow (except rails and radiators that are gloss black) • SAE standard rotation • Flywheel and Flywheel housing - SAE No. 0	• UL 2200 • CSA certification • EU Declaration of Incorporation

STANDBY 1000 ekW 1250 kVA

60 Hz 1800 rpm 480 Volts

SPECIFICATIONS

CAT GENERATOR

Frame ……..…….. 1402
Excitation ……Internal Excitation (IE)
Pitch…….……0.6667
Number of poles…….……4
Number of bearings ……..Two Bearing
Insulation ……Class H
IP rating ……..Drip proof IP23
Over speed capability - % of rated……125%
Wave form deviation……...3 %
Voltage regulator……. 3 phase sensing with load adjustable module
Telephone Influence Factor ……Less than 50
Harmonic Distortion ……..Less than 5%

CAT DIESEL ENGINE

C32 ATAAC, V-12, 4 stroke water-cooled diesel

Bore ……145.00 mm (5.71 in)
Stroke ……..162.00 mm (6.38 in)
Displacement ……32.10 L (1958.86 in^3)
Compression ratio……...15:1
Aspiration……TA
Fuel system……..…MEUI
Governor Type……..ADEM™ A4

CAT EMCP 3 CONTROL PANELS

- EMCP 3.1 (Standard)
- EMCP 3.2 / EMCP 3.3 (Option)
- Single location customer connector point
- True RMS metering, 3-phase
- Controls
  - Run / Auto / Stop control
  - Speed Adjust
  - Voltage Adjust
  - Emergency Stop Pushbutton
  - Engine cycle crank
- Digital Indication for:
  - RPM
  - Operating hours
  - Oil Pressure
  - Coolant temperature
  - System DC volts
  - L-L volts, L-N volts, phase amps, Hz
  - ekW, kVA, kVAR, kW-hr, %kW, PF (EMCP 3.2 / 3.3)
- Shutdowns with common indicating light for:
  - Low oil pressure
  - High coolant temperature
  - Low coolant level
  - Overspeed
  - Emergency Stop
  - Failure to start (overcrank)
- Programmable protective relaying functions: (EMCP 3.2 & 3.3)
  - Under and over voltage
  - Under and over frequency
  - Overcurrent (time and inverse time)
  - Reverse power (EMCP 3.3)
- MODBUS isolated data link, RS-485 half duplex (EMCP 3.2 & 3.3)
- Options
  - Vandal door
  - Local annunciator module
  - Remote annunciator module
  - Input / Output module
  - RTD / Thermocouple Modules
  - Monitoring software

STANDBY 1000 ekW 1250 kVA

60 Hz 1800 rpm 480 Volts

CATERPILLAR®

TECHNICAL DATA

Open Generator Set - 1800 rpm/60 Hz/480 Volts	STANDBY DM9933	
Package Performance		
Power rating	1000 ekW	
Power rating @ 0.8 pf	1250 kVA	
Fuel Consumption		
100% load with fan	272.5 L/hr	72.0 Gal/hr
75% load with fan	213.2 L/hr	56.3 Gal/hr
50% load with fan	144.7 L/hr	38.2 Gal/hr
Cooling System*		
Ambient air temperature	45 °C	113°F
Air flow (max @rated speed)	1126 m^3/min	39764 cfm
Engine coolant Capacity with radiator arrangement	190.0 L	50.22 US Gal
Engine coolant capacity	55.0 L	14.5 US Gal
Radiator coolant capacity	135.0 L	35.7 US Gal
Inlet Air		
Combustion air inlet flow rate	86.9 m^3/min	3068.8 cfm
Exhaust System		
Exhaust stack gas temperature	478.5 °C	893.3 °F
Exhaust gas flow rate	230.2 m^3/min	8129.4 cfm
Exhaust flange size (internal diameter)	203 mm	8 in
Exhaust system backpressure (maximum allowable)	10.0 kPa	40.2 in. water
Heat Rejection		
Heat rejection to coolant (total)	355 kW	20189 Btu/min
Heat rejection to exhaust (total)	988 kW	56187 Btu/min
Heat rejection to aftercooler	279 kW	15867 Btu/min
Heat rejection to atmosphere from engine	196 kW	11146 Btu/min
Heat rejection to atmosphere from generator	62.7 kW	3569 Btu/min
Alternator**		
Motor starting capability @ 30% voltage dip	2734 SKVA	
Frame	1402	
Temperature Rise	125°C	257 °F
Lube System		
Lube oil refill volume with filter change for standard sump	68.0 L	18.0US Gal
Emissions (Nominal)***		
NO_x g/hp-hr	4.93 g/hp-hr	
CO g/hp-hr	.13g/hp-hr	
HC g/hp-hr	.01 g/hp-hr	
PM g/hp-hr	.018 g/hp-hr	

* For ambient and altitude capabilities consult your Caterpillar dealer. Air flow restriction (system) is added to existing restriction from factory.

** UL 2200 Listed packages may have oversized generators with a different temperature rise and motor starting characteristics. Generator temperature rise is based on a 40 degree C ambient per NEMA MG1-32.

*** Emissions data measurement procedures are consistent with those described in EPA CFR 40 Part 89, Subpart D & E and ISO8178-1 for measuring HC, CO, PM, NO_x. Data shown is based on steady state operating conditions of 77°F, 28.42 in HG and number 2 diesel fuel with 35° API and LHV of 18,390 btu/lb. The nominal emissions data shown is subject to instrumentation, measurement, facility and engine to engine variations. Emissions data is based on 100% load and thus cannot be used to compare to EPA regulations which use values based on a weighted cycle.

RATING DEFINITIONS AND CONDITIONS

Meets or Exceeds International Specifications: AS1359, CSA, IEC60034-1, ISO3046, ISO8528, NEMA MG 1-22, NEMA MG 1-33, UL508A, 72/23/EEC, 98/37/EC, 2004/108/EC

Standby - Output available with varying load for the duration of the interruption of the normal source power. Average power output is 70% of the standby power rating. Typical operation is 200 hours per year, with maximum expected usage of 500 hours per year. Standby power in accordance with ISO8528. Fuel stop power in accordance with ISO3046. Standby ambients shown indicate ambient temperature at 100% load which results in a coolant top tank temperature just below the shutdown temperature.

Ratings are based on SAE J1349 standard conditions. These ratings also apply at ISO3046 standard conditions

Fuel Rates are based on fuel oil of 35º API [16º C (60º F)] gravity having an LHV of 42 780 kJ/kg (18,390 Btu/lb) when used at 29º C (85º F) and weighing 838.9 g/liter (7.001 lbs/U.S. gal.). Additional ratings may be available for specific customer requirements, contact your Caterpillar representative for details. For information regarding Low Sulfur fuel and Biodiesel capability, please consult your Caterpillar dealer.

STANDBY 1000 ekW 1250 kVA

60 Hz 1800 rpm 480 Volts

DIMENSIONS

Package Dimensions		
Length	4666.9 mm	183.7 in
Width	1829.0 mm	72.0 in
Height	2212.6 mm	87.1 in
Weight	8028 kg	17,699 lb

NOTE: For reference only - do not use for installation design. Please contact your local dealer for exact weight and dimensions.

www.CAT-ElectricPower.com

©2009 Caterpillar
All rights reserved.

Materials and specifications are subject to change without notice. The International System of Units (SI) is used in this publication.

CAT, CATERPILLAR, SAFETY.CAT.COM, their respective logos, "Caterpillar Yellow," the “Power Edge” trade dress, as well as corporate and product identity used herein, are trademarks of Caterpillar and may not be used without permission.

Performance No.: DM9933

Feature Code: C32DE28

Gen. Arr. Number: 3002236

Sourced: U.S. Sourced

LEHE0036-01 (07/09)

DIESEL GENERATOR SET

CATERPILLAR®

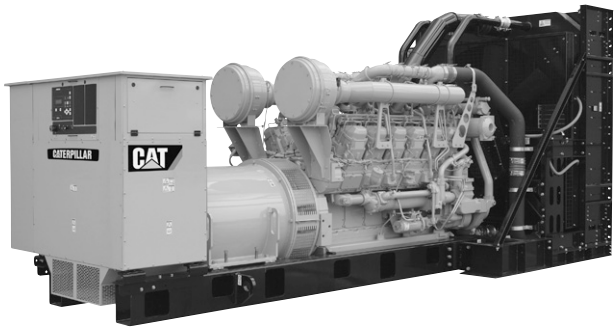

Image shown may not reflect actual package.

STANDBY

1500 ekW 1875 kVA
60 Hz 1800 rpm 480 Volts

Caterpillar is leading the power generation marketplace with Power Solutions engineered to deliver unmatched flexibility, expandability, reliability, and cost-effectiveness.

FEATURES

FUEL/EMISSIONS STRATEGY
- EPA Tier 2

DESIGN CRITERIA
- The generator set accepts 100% rated load in one step per NFPA 110 and meets ISO 8528-5 transient response.

UL 2200
- UL 2200 listed packages available. Certain restrictions may apply. Consult with your Caterpillar Dealer.

FULL RANGE OF ATTACHMENTS
- Wide range of bolt-on system expansion attachments, factory designed and tested
- Flexible packaging options for easy and cost effective installation

SINGLE-SOURCE SUPPLIER
- Fully prototype tested with certified torsional vibration analysis available

WORLDWIDE PRODUCT SUPPORT
- Caterpillar® dealers provide extensive post sale support including maintenance and repair agreements
- Caterpillar dealers have over 1,600 dealer branch stores operating in 200 countries
- The Cat® S•O•S℠ program cost effectively detects internal engine component condition, even the presence of unwanted fluids and combustion by-products

CAT 3512C DIESEL ENGINE
- Reliable, rugged, durable design
- Four-stroke-cycle diesel engine combines consistent performance and excellent fuel economy with minimum weight

CAT GENERATOR
- Designed to match the performance and output characteristics of Caterpillar diesel engines
- Single point access to accessory connections
- UL 1446 recognized Class H insulation

CAT EMCP 3 SERIES CONTROL PANELS
- Simple user friendly interface and navigation
- Scalable system to meet a wide range of customer needs
- Integrated Control System and Communications Gateway

FACTORY INSTALLED STANDARD & OPTIONAL EQUIPMENT

System	Standard	Optional
Air Inlet	• Single element canister type air cleaner with service indicator	• Dual element & heavy duty air cleaners (with pre-cleaners) • Air inlet adapters & shutoff
Cooling	• EPA Tier II Certified Std PGS provides ATAAC • All 3512C package radiators shipped installed • Air return temp from ATAAC 50ºC 122ºF) at 30ºC (86ºC)ambient temperature. • Radiator fan and fan drive • Fan and belt guards • Coolant drain line with valve • Coolant level sensors* • Caterpillar Extended Life Coolant*	• Radiator removal • Coolant level switch gauge • Heat exchanger and expansion tank
Exhaust	• Exhaust manifold - dry - dual - 8 in • 203 mm (8 in) ID round flanged outlet	• Mufflers • Stainless steel exhaust flex fittings • Elbows, flanges, expanders & Y adapters
Fuel	• Secondary fuel filters • Fuel cooler* • Fuel priming pump • Flexible fuel lines-shipped loose	• Duplex secondary fuel filter • Primary fuel filter with fuel water separator *Not included with packages without radiator
Generator	• Class H insulation • CAT digital voltage regulator (CDVR) with DVAR/PF control, 3-phase sensing • Winding temperature detectors • Anti-condensation space heaters • Reactive droop	• Oversize & premium generators
Power Termination	•Bus bar (NEMA and IEC mechanical lug holes)- right side standard •Top and bottom cable entry	• Circuit breakers, UL listed, 3 pole shunt trip, 100% rated, choice of trip units, manual or electrically operated (low voltage only) • Circuit breakers, IEC compliant, 3 or 4 pole with shunt trip (low voltage only), choice of trip units, manual or electrically operated • Shroud cover for bottom cable entry • Power terminations can be located on the left and/or rear as an option. Also, multiple circuit breakers can be ordered (up to 2)
Governor	• ADEM™ III	• Load share module
Control Panel	• User interface panel (UIP) - rear mount • EMCP 3.1 Genset Controller • Speed Adjust • AC & DC customer wiring area (right side) • Emergency Stop Pushbutton	• EMCP 3.3 • Option for right or left mount UIP • Option for rear or left mount Customer wiring area • Local & remote annunciator modules • Load share module • Discrete I/O Module • Generator temperature monitoring & protection • Voltage Adjust
Lube	• Lubricating oil • Gear type lube oil pump • Integral lube oil cooler • Oil filter, filler and dipstick • Oil drain line and valve • Fumes disposal	• Oil level regulator • Deep sump oil pan • Electric & air prelube pumps • Manual prelube with sump pump • Duplex oil filter
Mounting	• Rails - engine / generator / radiator mounting • Anti-vibration mounts (shipped loose) • Rubber anti-vibration mounts (shipped loose)	• Isolator removal • Spring type vibration isolator
Starting/Charging	• 24 volt starting motor(s) • Batteries with rack and cables • Battery disconnect switch	• Battery chargers (10 &20 Amp) • 45 amp charging alternator • Oversize batteries • Ether starting aids • Heavy duty starting motors • Barring device (manual) • Air starting motor with control & silencer

SPECIFICATIONS

CAT GENERATOR

SR4B Generator
Frame Size.....697
Excitation..... Permanent Magnet
Pitch.....0.7333
Number of poles.....4
Number of bearings..... Single Bearing
Number of Leads.....6
Insulation..... UL 1446 Recognized Class H with tropicalization and antiabrasion
IP Rating.....Drip Proof IP22
Alignment..... Pilot Shaft
Overspeed capability- % of rated..... 150
Wave form.....003.00
Paralleling kit/Droop transformer..... Standard
Voltage Regulator3 Phase sensing with selectible volts/Hz
Telephone influence factor.....Less than 50

CAT DIESEL ENGINE

3512C ATAAC, V-12, 4 stroke, water-cooled diesel
Bore..... 170.00 mm (6.69 in)
Stroke..... 190.00 mm (7.48 in)
Displacement.....51.80 L (3161.03 in^3)
Compression Ratio..... 14.7:1
Aspiration..... TA
Fuel System..... Electronic unit injection
Governor Type..... ADEM3

CAT EMCP SERIES CONTROLS

- EMCP 3.1 (Standard)
- EMCP 3.2 / EMCP 3.3 (Option)
- Single location customer connector point
- True RMS AC metering, 3-phase
- Controls
  - Run / Auto / Stop control
  - Speed Adjust
  - Voltage Adjust
  - Emergency Stop Pushbutton
  - Engine cycle crank
- Digital Indication for:
  - RPM
  - Operating hours
  - Oil pressure
  - Coolant temperature
  - System DC volts
  - L-L volts, L-N volts, phase amps, Hz
  - ekW, kVA, kVAR, kW-hr, %kW, PF (EMCP 3.2 / 3.3)
- Shutdowns with common indicating light for:
  - Low oil pressure
  - High coolant temperature
  - Low coolant level
  - Overspeed
  - Emergency stop
  - Failure to start (overcrank)
- Programmable protective relaying functions: (EMCP 3.2 & 3.3)
  - Under and over voltage
  - Under and over frequency
  - Overcurrent (time and inverse time)
  - Reverse power (EMCP 3.3)
- MODBUS isolated data link, RS-485 half-duplex (EMCP 3.2 & 3.3)
- Options
  - Vandal door
  - Local annunciator module
  - Remote annunciator module
  - Input / Output module
  - RTD / Thermocouple modules
  - Monitoring software

TECHNICAL DATA

Open Generator Set - - 1800 rpm/60 Hz/480 Volts	DM8260	
EPA Tier 2		
Generator Set Package Performance		
Genset Power rating @ 0.8 pf	1875 kVA	
Genset Power rating with fan	1500 ekW	
Coolant to aftercooler		
Coolant to aftercooler temp max	50 ° C	122 ° F
Fuel Consumption		
100% load with fan	396.9 L/hr	104.8 Gal/hr
75% load with fan	310.9 L/hr	82.1 Gal/hr
50% load with fan	219.8 L/hr	58.1 Gal/hr
Cooling System[1]		
Air flow restriction (system)	0.12 kPa	0.48 in. water
Air flow (max @ rated speed for radiator arrangement)	2075 m^3/min	73278 cfm
Engine Coolant capacity with radiator/exp. tank	390.8 L	103.2 gal
Engine coolant capacity	156.8 L	41.4 gal
Radiator coolant capacity	234.0 L	61.8 gal
Inlet Air		
Combustion air inlet flow rate	129.5 m^3/min	4573.3 cfm
Exhaust System		
Exhaust stack gas temperature	406.4 ° C	763.5 ° F
Exhaust gas flow rate	313.2 m^3/min	11060.6 cfm
Exhaust flange size (internal diameter)	203.2 mm	8.0 in
Exhaust system backpressure (maximum allowable)	6.7 kPa	26.9 in. water
Heat Rejection		
Heat rejection to coolant (total)	616 kW	35032 Btu/min
Heat rejection to exhaust (total)	1327 kW	75466 Btu/min
Heat rejection to aftercooler	482 kW	27411 Btu/min
Heat rejection to atmosphere from engine	124 kW	7052 Btu/min
Heat rejection to atmosphere from generator	64.1 kW	3645.4 Btu/min
Alternator[2]		
Motor starting capability @ 30% voltage dip	2670 skVA	
Frame	697	
Temperature Rise	130 ° C	234 ° F
Lube System		
Sump refill with filter	310.4 L	82.0 gal
Emissions (Nominal)[3]		
NOx g/hp-hr	4.97 g/hp-hr	
CO g/hp-hr	.45 g/hp-hr	
HC g/hp-hr	.11 g/hp-hr	
PM g/hp-hr	.03 g/hp-hr	

[1] For ambient and altitude capabilities consult your Caterpillar dealer. Air flow restriction (system) is added to existing restriction from factory.

[2] UL 2200 Listed packages may have oversized generators with a different temperature rise and motor starting characteristics. Generator temperature rise is based on a 40 degree C ambient per NEMA MG1-32.

[3] Emissions data measurement procedures are consistent with those described in EPA CFR 40 Part 89, Subpart D & E and ISO8178-1 for measuring HC, CO, PM, NOx. Data shown is based on steady state operating conditions of 77ºF, 28.42 in HG and number 2 diesel fuel with 35º API and LHV of 18,390 btu/lb. The nominal emissions data shown is subject to instrumentation, measurement, facility and engine to engine variations. Emissions data is based on 100% load and thus cannot be used to compare to EPA regulations which use values based on a weighted cycle.

RATING DEFINITIONS AND CONDITIONS

Meets or Exceeds International Specifications: AS1359, CSA, IEC60034-1, ISO3046, ISO8528, NEMA MG 1-22, NEMA MG 1-33, UL508A, 72/23/EEC, 98/37/EC, 2004/108/EC

Standby - Output available with varying load for the duration of the interruption of the normal source power. Average power output is 70% of the standby power rating. Typical operation is 200 hours per year, with maximum expected usage of 500 hours per year. Standby power in accordance with ISO8528. Fuel stop power in accordance with ISO3046. Standby ambients shown indicate ambient temperature at 100% load which results in a coolant top tank temperature just below the shutdown temperature.

Ratings are based on SAE J1349 standard conditions. These ratings also apply at ISO3046 standard conditions.

Fuel rates are based on fuel oil of 35° API [16° C (60° F)] gravity having an LHV of 42 780 kJ/kg (18,390 Btu/lb) when used at 29° C (85° F) and weighing 838.9 g/liter (7.001 lbs/U.S. gal.). Additional ratings may be available for specific customer requirements, contact your Caterpillar representative for details. For information regarding Low Sulfur fuel and Biodiesel capability, please consult your Caterpillar dealer.

DIMENSIONS

Package Dimensions		
Length	**5895.0 mm**	**232.09 in**
Width	**2537.5 mm**	**99.9 in**
Height	**2749.5 mm**	**108.25 in**
Weight	**14 121 kg**	**31,131 lb**

NOTE: For reference only - do not use for installation design. Please contact your local dealer for exact weight and dimensions. (General Dimension Drawing #2846048).

Performance No.: DM8260

Feature Code: 512DE6C

Gen. Arr. Number: 2628100

Source: U.S. Sourced

May 27 2009 14155667

www.CAT-ElectricPower.com

© 2009 Caterpillar
All rights reserved.

Materials and specifications are subject to change without notice. The International System of Units (SI) is used in this publication.

CAT, CATERPILLAR, SAFETY.CAT.COM their respective logos, "Caterpillar Yellow," and the POWER EDGE trade dress, as well as corporate and product identity used herein, are trademarks of Caterpillar and may not be used without permission.

DIESEL GENERATOR SET

CATERPILLAR®

Image shown may not reflect actual package.

STANDBY
250 ekW 313 kVA
60 Hz 1800 rpm 480 Volts

Caterpillar is leading the power generation marketplace with Power Solutions engineered to deliver unmatched flexibility, expandability, reliability, and cost-effectiveness.

FEATURES

FUEL/EMISSIONS STRATEGY
- EPA Tier 3

DESIGN CRITERIA
- The generator set accepts 100% rated load in one step per NFPA 110 and meets ISO 8528-5 transient response.

UL 2200
- UL 2200 listed packages available. Certain restrictions may apply. Consult with your Caterpillar Dealer.

FULL RANGE OF ATTACHMENTS
- Wide range of bolt-on system expansion attachments, factory designed and tested
- Flexible packaging options for easy and cost effective installation

SINGLE-SOURCE SUPPLIER
- Fully prototype tested with certified torsional vibration analysis available

WORLDWIDE PRODUCT SUPPORT
- Caterpillar® dealers provide extensive post sale support including maintenance and repair agreements
- Caterpillar dealers have over 1,600 dealer branch stores operating in 200 countries
- The Cat® S•O•S℠ program cost effectively detects internal engine component condition, even the presence of unwanted fluids and combustion by-products

CAT® C9 ATAAC DIESEL ENGINE
- Utilizes ACERT™ Technology
- Reliable, rugged, durable design
- Field-proven in thousands of applications worldwide
- Four-stroke diesel engine combines consistent performance and excellent fuel economy with minimum weight
- ADEM™A4 electronic engine control

CAT GENERATOR
- Matched to the performance and output characteristics of Caterpillar engines
- Load adjustment module provides engine relief upon load impact and improves load acceptance and recovery time
- UL 1446 Recognized Class H insulation

CAT EMCP 3 SERIES CONTROL PANELS
- Simple user friendly interface and navigation
- Scalable system to meet a wide range of customer needs
- Integrated Control System and Communications Gateway

FACTORY INSTALLED STANDARD & OPTIONAL EQUIPMENT

System	Standard	Optional
Air Inlet	• Light Duty Air filter	• Dual element & heavy duty air cleaners
Cooling	• Radiator package mounted(50ºC) • Coolant level sight gauge • Coolant drain line with valve • Fan and belt guards • Caterpillar Extended Life Coolant	• Radiator duct flange
Exhaust	• Dry exhaust manifold	• Mufflers • Stainless steel exhaust flex with split cuff connectors • Elbows
Fuel	• Primary fuel filter with integral water separtor • Secondary fuel filters • Fuel cooler • Fuel priming pump • Engine fuel transfer pump	• Integral UL listed fuel tank bases • Flex fuel line • Fuel level switch
Generator	• Class H insulation • Class H Temperature Rise • R448 voltage regulator with load adjustment module • IP23 Protection • Power Center • Single phase sensing	• Oversize and premium generators • Three phase sensing • Digital voltage regulator with KVAR/PF control • Anti-condensation space heaters • Cable access box • Reactive droop
Power Termination	• Bus-bar connection inside generator (NEMA pattern)	• Circuit breakers, UL listed, 3 pole • Circuit breakers, IEC compliant, 3-4 pole • Power terminal strip connections in power center • Shunt trip • Auxiliary contacts
Governor	• ADEM™A4	• Load share module
Control Panels	• EMCP 3.1 (mounted inside power center) • Rear facing • Speed adjust • Emergency stop pushbutton • Voltage adjustment	• EMCP 3.2 & EMCP 3.3 • Right-hand mounting of control panel • Local annuniciator modules (NFPA 99/110) • Remote annunicator modules (NFPA 99/110) • Discrete I/O module
Lube	• Lubricating oil and filter • Oil drain line with valves • Fumes disposal • Lube oil level indicator	• Oil temperature sensor • Manual sump pump
Mounting	• Formed steel wide base frame • Linear vibration isolation-seismic zone 4	• Oil field skid base • Formed steel wide base frame
Starting/Charging	• 24 volt starting motor • 45 amp charging alternator	• Jacket water heater with shut off valves • Block heater • Ether starting aids • Battery disconnect switch • Battery charger(5A,10A) • Oversize batteries • Batteries with rack and cables
General	• Paint - Caterpillar yellow except rails and radiators gloss black • Flywheel and flywheel housing - SAE No.1	• UL 2200 packages

STANDBY 250 ekW 313 kVA

60 Hz 1800 rpm 480 Volts

CATERPILLAR®

SPECIFICATIONS

CAT GENERATOR

Frame size..... LC5014H
Excitation.....Self Excited
Pitch.....0.6667
Number of poles.....4
Number of bearings..... 1
Number of leads..... 12
Insulation..... UL 1446 Recognized Class H with tropicalization and antiabrasion
- Consult your Caterpillar dealer for available voltages
IP rating.....IP23
Alignment.....Pilot Shaft
Overspeed capability..... 125% of rated
Wave form deviation (Line to Line)..... 2%
Voltage regulator.....Single phase sensing
Voltage Regulation.. Less than +/- 1/2% (steady state)Less than +/- 1% (no load to full load)
Telephone Influence Factor..... Less than 50
Harmonic distortion..... Less than 5%

CAT DIESEL ENGINE

C9 ATAAC, I-6, 4-stroke-cycle watercooled diesel
Bore - mm..... 112.00 mm (4.41 in)
Stroke - mm..... 149.00 mm (5.87 in)
Displacement - L..... 8.80 L (537.01 in^3)
Compression ratio..... 16.1:1
Aspiration..... Turbocharged Air-to-Air Aftercooled
Fuel system..... HUEI
Governor type..... Caterpillar ADEM control system

CAT EMCP 3 CONTROL PANELS

- EMCP 3.1 (Standard)
- EMCP 3.2 / EMCP 3.3 (Option)
- Single location customer connector point
- True RMS metering, 3-phase
- Controls
  - Run / Auto / Stop control
  - Speed Adjust
  - Voltage Adjust
  - Emergency Stop Pushbutton
  - Engine cycle crank
- Digital Indication for:
  - RPM
  - Operating hours
  - Oil Pressure
  - Coolant temperature
  - System DC volts
  - L-L volts, L-N volts, phase amps, Hz
  - ekW, kVA, kVAR,kW-hr, %kW, PF (EMCP 3.2 / 3.3)
- Shutdowns with common indicating light for:
  - Low oil pressure
  - High coolant temperature
  - Low coolant level
  - Overspeed
  - Emergency stop
  - Failure to start (overcrank)
- Programmable protective relaying functions: (EMCP 3.2 & 3.3)
  - Under and over voltage
  - Under and over frequency
  - Overcurrent (time and inverse time)
  - Reverse power (EMCP 3.3)
- MODUS isolated data link (RS-485 half-duplex EMCP 3.2 & 3.3)
- Options
  - Vandal door
  - Local annunciator module
  - Remote annunciator module
  - Input / Output module
  - RTD / Thermocouple Modules
  - Monitoring software

TECHNICAL DATA

Open Generator Set - - 1800 rpm/60 Hz/480 Volts	DM8501	
Tier 3		
Generator Set Package Performance		
Genset Power rating @ 0.8 pf	312.5 kVA	
Genset Power rating with fan	250 ekW	
Coolant to aftercooler		
Coolant to aftercooler temp max	49 ° C	120 ° F
Fuel Consumption		
100% load with fan	73.3 L/hr	19.4 Gal/hr
75% load with fan	58.8 L/hr	15.5 Gal/hr
50% load with fan	43.8 L/hr	11.6 Gal/hr
Cooling System[1]		
Air flow restriction (system)	0.12 kPa	0.48 in. water
Air flow (max @ rated speed for radiator arrangement)	497 m³/min	17551 cfm
Engine Coolant capacity with radiator/exp. tank	36.0 L	9.5 gal
Engine coolant capacity	22.0 L	5.8 gal
Radiator coolant capacity	14.0 L	3.7 gal
Inlet Air		
Combustion air inlet flow rate	24.9 m³/min	879.3 cfm
Exhaust System		
Exhaust stack gas temperature	456.6 ° C	853.9 ° F
Exhaust gas flow rate	63.5 m³/min	2242.5 cfm
Exhaust flange size (internal diameter)	170 mm	7 in
Exhaust system backpressure (maximum allowable)	5.9 kPa	23.7 in. water
Heat Rejection		
Heat rejection to coolant (total)	105 kW	5971 Btu/min
Heat rejection to exhaust (total)	267 kW	15184 Btu/min
Heat rejection to aftercooler	79 kW	4493 Btu/min
Heat rejection to atmosphere from engine	34 kW	1934 Btu/min
Heat rejection to atmosphere from generator	19.7 kW	1120.3 Btu/min
Alternator[2]		
Motor starting capability @ 30% voltage dip	543 skVA	
Frame	LC5014H	
Temperature Rise	150 ° C	270 ° F
Lube System		
Sump refill with filter	40.0 L	10.6 gal
Emissions (Nominal)[3]		
NOx g/hp-hr	2.99 g/hp-hr	
CO g/hp-hr	.36 g/hp-hr	
HC g/hp-hr	.1 g/hp-hr	
PM g/hp-hr	.08 g/hp-hr	

[1] For ambient and altitude capabilities consult your Caterpillar dealer. Air flow restriction (system) is added to existing restriction from factory.
[2] Generator temperature rise is based on a 40º C (104º F) ambient per NEMA MG1-32.
[3] Emissions data measurement procedures are consistent with those described in EPA CFR 40 Part 89, Subpart D & E and ISO8178-1 for measuring HC, CO, PM, NOx. Data shown is based on steady state operating conditions of 77ºF, 28.42 in HG and number 2 diesel fuel with 35º API and LHV of 18,390 btu/lb. The nominal emissions data shown is subject to instrumentation, measurement, facility and engine to engine variations. Emissions data is based on 100% load and thus cannot be used to compare to EPA regulations which use values based on a weighted cycle.

RATING DEFINITIONS AND CONDITIONS

Meets or Exceeds International Specifications: AS1359, CSA, IEC60034-1, ISO3046, ISO8528, NEMA MG 1-22, NEMA MG 1-33, UL508A, 72/23/EEC, 98/37/EC, 2004/108/EC

Standby - Output available with varying load for the duration of the interruption of the normal source power. Average power output is 70% of the standby power rating. Typical operation is 200 hours per year, with maximum expected usage of 500 hours per year. Standby power in accordance with ISO8528. Fuel stop power in accordance with ISO3046. Standby ambients shown indicate ambient temperature at 100% load which results in a coolant top tank temperature just below the shutdown temperature.

Ratings are based on SAE J1349 standard conditions. These ratings also apply at ISO3046 standard conditions.

Fuel rates are based on fuel oil of 35° API [16° C (60° F)] gravity having an LHV of 42 780 kJ/kg (18,390 Btu/lb) when used at 29° C (85° F) and weighing 838.9 g/liter (7.001 lbs/U.S. gal.). Additional ratings may be available for specific customer requirements, contact your Caterpillar representative for details. For information regarding Low Sulfur fuel and Biodiesel capability, please consult your Caterpillar dealer.

DIMENSIONS

Package Dimensions		
Length	**3292.0 mm**	**129.61 in**
Width	**1112.3 mm**	**43.79 in**
Height	**1844.5 mm**	**72.62 in**
Weight	**2223 kg**	**4,901 lb**

NOTE: For reference only - do not use for installation design. Please contact your local dealer for exact weight and dimensions. (General Dimension Drawing #2778059).

© 2009 Caterpillar
All rights reserved.

Materials and specifications are subject to change without notice. The International System of Units (SI) is used in this publication.

CAT, CATERPILLAR, SAFETY.CAT.COM their respective logos, "Caterpillar Yellow," and the POWER EDGE trade dress, as well as corporate and product identity used herein, are trademarks of Caterpillar and may not be used without permission.

Attachment F

Supplemental Control Technology Review

BACT Analysis for MLC, HPU Engines and Small Diesel Engines

The current document is being provided as supplemental information for the proposed Shell Chukchi oil exploration permit application. Due to time constraints, the information has not been formatted following formal EPA guidance. However, the information contained here is important and reflects the same issues that are addressed in formal BACT submissions.

Engine Description

MLC Air Compressors and HPU Units (FD-9, 10, 11, 12, and 13)

The Mud Line Cellar (MLC) air compressors (FD-9, 10, and 11) and hydraulic power units or HPU (FD-12 and 13) are used for drilling the MLCs, which is the initial drilling activity lasting about six days. These engines would be operated between 50 and 100 percent capacity to evacuate the MLC. Shell requests Owner Requested Restrictions (ORRs) equivalent to 63 days per season of capacity operation for each of these two source groups. The air compressors are to be new Tier 3 engines with no add-on emission controls, while the HPUs are existing engines with catalytic diesel particulate filters (CDPF) for control of oxidizable emissions (volatile organics, carbon monoxide, and soluble particulate matter) and solid particulate matter.

Table X-1 identifies the MLC Air Compressor engine size, make and model numbers. As stated above, these engines will be new engines designed to meet new Tier 3 engine regulations, which are the most stringent emissions standards for commercially available engines with this engine size.

Table X-1. MLC Air Compressor Tier 3 Engines

Unit	Manufacturer	Model No	Size (hp)	Load %	Operating factor (days per year)
FD-9	Caterpillar	C-15	540	50 to 100	63
FD-10	Caterpillar	C-15	540	50 to 100	63
FD-11	Caterpillar	C-15	540	50 to 100	63

Table X-2 identifies the HPU engine sizes, make and model numbers. As stated above, the HPUs are existing engines with catalytic diesel particulate filters (CDPF) for control of VOCs, CO and PM. The engines were built in 1978 and 1979.

Table X-2. Hydraulic Power Units

Unit	Manufacturer	Model No	Size (hp)	Load %	Operating factor (days per year)
FD-12	Detroit	8V71	250	50 to 100	63
FD-13	Detroit	8V71	250	50 to 100	63

The MLC equipment is temporary equipment that is loaded onto the drill ship for the MLC drilling operation that occurs at the beginning of the well drilling program. The two hydraulic power units (HPUs) and the three air compressor units (ACUs) are each powered by diesel engines. These units have been designed to be portable so they can be removed from the drill ship at any time, should the deck space be required for other equipment or materials associated with the well. However, operationally, the preference is to have these units available on board the drill ship to minimize time required to set up the units for a second MLC operation if so required, as well as to reduce the potential of damage or corrosion that might occur if they are stored on the deck of an anchor handler or supply vessel. Figure X-1 below shows the location and size of the Air Compressor units. The air compressors are quite large (20 ft x 7.3 ft w x 8 ft h each), and as a result there is a limited number of locations that will allow easy access for operations and maintenance. The area chosen was the port forward casing racks near the drill floor, as shown by the pictures in Figure X-1.

Figure X-1. Air Compressor Units for MLC

Operationally, the HPUs need to be located as close to well center as possible to reduce the length of the umbilical hose that is required to supply the power fluid to the MLC bit. In 2007, the location that was seen to be best to store and operate the HPUs was the top of the BOP 'garage' (See Figure X-2). Although limited on space to layout the HPUs (Figure X-3) and the hose reel (Figure X-4), the proximity to and straight line access to the drill floor was an advantage. The 'Top of BOP garage' photo shows the location relative to the drill floor and the 'Hyd Unit #2' photo shows one of the units in place. Each HPU is approximately 12 ft x 7 ft w x 8 ft h.

Figure X-2. Location for the HPUs

Figure X-3. Hydraulic Power Unit No.2

Figure X-4. HPU Hose Reel

Figure X-5 Port and Starboard Deck Cranes

Cranes (FD-14 and 15)
The Discoverer has two MY 1974 cranes mounted on pedestals that are used intermittently to move materials around the deck and to on-load supplies from the re-supply ship. The engine operating rates are highly variable, and depend on the load being moved. Shell proposes an ORR for the combined operation of the cranes equivalent to 63 days per season of capacity operation, to be demonstrated through tracking of fuel consumption. The crane engines have CDPFs for control of soluble organic fraction and solid particulate matter, carbon monoxide, and volatile organics. The crane engines were built in 1974.

Table X-X. Crane engine sizes, make and model numbers..

Unit	Manufacturer	Model No	Size (hp)	Load %	Operating factor (days per year)
FD-14	Caterpillar	D343	365	variable	63
FD-15	Caterpillar	D343	365	variable	

Cement Units (FD-16, 17, and 18)

Three cementing units are used intermittently to fix casings in the hole and seal the drill hole when drilling is interrupted or ended. The cementing units force a slurry of cement and additives down the casing and into the annular space between the casing and the wall of the borehole when the drill pipe is pulled out of the hole, or for P&A'ing wells. The cement units are also used intermittently as high pressure pumps for hydrostatically testing well equipment and drilling components, such as the wellhead connections, the blowout preventer and other connections.

Because drilling cannot take place simultaneously with cementing, the generators will be operating only at low loads when cementing occurs. This decrease in generator emissions is not taken into account in the impact analysis herein. Shell requests an ORR equivalent to capacity operation for 27.8 percent of the day for the three cementing unit engines and the two logging units (discussed below) combined, to be demonstrated through tracking of fuel consumption. The cementing units are equipped with CDPFs for control of volatile organics, carbon monoxide, and organic particulate matter. Table X-3 below identifies the cementing unit engine characteristics.

Table X-3. Cementing Units model year?

Unit	Manufacturer	Model No	Size (hp)	Load %	Operating factor (days per year)
FD-16	Detroit	8V-71N	365	Low	<= 27.8% of operation days
FD-17	Detroit	8V-71N	365	Low	
FD-18	GM	3-71	147	Low	

Logging Units (FD-19 and 20)

The Logging winch unit and electrical power generator are powered by diesel engines. The logging equipment is used to gather information from the well after the drill stem is removed. When the logging equipment is operated, the cementing units would be off and the drilling generators would be operating at low load. The logging units operate at variable and unpredictable loads. The logging units also have CDPFs for control of volatile organics, carbon monoxide, and organic and solid particulate matter.

The electrical generator has a Tier 2 MMG35 generator engine, as shown in Figure X-X. The load for the generator varies depending on the type of operation and is summarized as follows, but the generators are very lightly loaded most of the time.

- Data Acquisition systems – Steady load ~5-10KW
- Lights – Varying load 0 – 3 KW.
- Heating – Varying load 0 – 20 KW

Figure X-X. Logging Generators

The logging winch unit meets the Tier 3 engine standard. The loads on the winch unit also vary and are summarized as follows:

- <5% during rig-up, rig-down, and when stopped in a well.
- Negative while descending into the well. While the tools are moving downward the engine is acting as a brake on the hydraulic system.
- ~5-15% of full power while logging the well dependent on tension and logging speed.
- 20-100% when retrieving the tools after logging, with the power need dependent on tension and well depth. With the power level dropping constantly as tension drops due cable retrieval. During this phase the load goes to zero every time the winch is stopped.

A logging job does not proceed smoothly through the four phases described above in a progression. During decent the winch is reversed several times to check tension, to clear obstructions, and to run repeat section. During retrieval the winch is often stopped when an obstruction is encountered or a wrap is missed.

To simplify the impact analysis, we elected to evaluate the logging unit emissions using cementing unit engines. This is a conservative assumption because the logging unit engines are smaller and have lower emission factors than the cementing unit engines.

Because the logging engines and the cementing unit engines cannot be used at the same time, Shell proposes to apply the same ORR to both the cementing and the logging units: the cementing units and logging units will operate no more than 27.8 percent of capacity in any calendar day. In other words, the daily fuel consumption restriction on the cementing units is to include use of the logging units. A summary of the logging unit engine characteristics are shown in Table X-4. Only one John Deere unit is required.

Either unit 3248 or 3285 will be sent to the rig prior to the start of the drilling season. Both John Deere units were built in 2005 and the Caterpillar unit was built in 2008

Table X-4. Logging Units (Generators and Winch Units)

Unit	Manufacturer	Model No	Size (hp)	Load %	Operating factor (days per year)
3248	John Deere	PE4020TF270D	35	Light and variable	168
3285	John Deere	PE4020TF270D	35	Light and variable	168
1723	Caterpillar	C7	250	Light and variable	168

BACT Evaluation

The Best Available Control Technology (BACT) evaluation below identifies all the potentially available control options for the engines identified above. The control technologies discussion is a top down analysis ranging from the most effective technology to the least effective. The discussion applies to all the engines including the MLC compressor engines and the smaller compression ignition (CI) internal combustion engines with exceptions noted. For each technology a conclusion is reached as to whether the technology represents BACT for the engines considered in this analysis.

Selective Catalytic Reduction (SCR)

While SCR is proposed for the main generator sets, several issues have been identified with applying SCR to the smaller air compressor engines, HPUs and other smaller CI engines. The six Caterpillar D399 generator sets (1,325 hp each) provide the primary systems power for drilling and ship utilities and are operational at varying load levels throughout the drilling process. Normally, no more than five engines will operate at one time, leaving one as a spare. For these Gensets, Shell plans to utilize ~42% concentration urea, which corresponds to salt out temperature of approx 40 Degrees F and an exhaust stream temperature to be maintained at 300 to 400°C. For these larger engines, it may be easier to maintain these temperatures due to their operating profile. However, the smaller engines operate on a more intermittent basis with a wide range of loads. The figures above show that the engines are located on deck where space is extremely limited.

The following analysis addresses the application of SCR to these smaller engines:

1. The dynamic loading of the smaller engines (swings of up to 50%) can be expected as the diesel engines are worked. These changing load demands will cause the overall system to be ineffective at scrubbing NOx emissions from the exhaust gasses. Accordingly the engines may not be sufficiently loaded to achieve exhaust temperatures necessary for optimal performance of the catalyst.

Under these conditions, NO_x reduction is critically restrained. It is estimated that NOx reduction may be as little as 20% at exhaust temperatures below 400°F (204 °C)[1].

2. These engines will be operating under cold climate conditions in the Arctic, and the fact that they are all located on the topsides deck of the rig severely reduces their ability to maintain effectively high temperatures.

3. Urea concentration is directly correlated to salt out temperature. For smaller engines with lower exhaust temperatures, the urea concentration would logically need to increase to get the same NOx emissions reduction as compared to the larger Genset engines. If urea was used on deck in the Arctic, it would be extremely difficult (although not impossible) to keep the temperatures high enough to stay in solution. If the salt was allowed to precipitate out, there would be a continuous build up of salt on the SCR catalyst and a corresponding increase in engine backpressure, which ultimately could lead to catastrophic damage to the engine.

4. Due to the characteristics described in items 1 to 3 above, there is potential for catalyst fouling and disintegration[1]

5. Ammonia slip can occur when catalyst temperatures are not in the optimal range for the reaction or when too much ammonia is injected into the process. As the temperature range of these smaller diesel engines are lower than that of larger generator diesel sets (such as the D399 Gensets), the effectiveness will be significantly diminished.

6. As shown in Figures X-1 to X-4 space is severely limited. In addition to retrofitting the engines with the SCR equipment, additional space is required onboard to store the reductant. Also, the logging winch units are designed to be space efficient portable systems. Due to increasing well depths the units have been upgraded from 170 HP non-tiered engines to 300 HP Tier 2 systems in the same space. The addition of turbochargers, charge air coolers, and larger silencers left no room for a SCR without a total redesign. As shown in Figures X-1 to X-4, space is extremely limited for all the other smaller engines as well. Furthermore, taking additional deck space for storage of reductants and other equipment would compromise the maneuverability during drilling operations.

7. The cost effectiveness of applying SCR has been calculated by EPA in it's Cost-Effectiveness of Reducing Particulate Matter and Nitrogen Oxides Emissions from Heavy-Duty Non-road Diesel Engines through Retrofits[2]. The cost-effectiveness for non-road equipment was calculated ranging from approximately

[1] Gaitley, J., The Operation of Selective Catalytic Reduction systems on Mobile Offshore Drilling Units, Transocean, September 9m 2009.

[2] Diesel Retrofit Technology, An analysis of the Cost-Effectiveness of Reducing Particulate Matter and Nitrogen Oxides Emissions form Heavy-Duty Nonroad Diesel Engines Through Retrofits, Office of Transportation and Air Quality, USEPA, EPA420-R-07-005, May 2007

$7,400 to $19,000 per ton of NOx reduced. For non-road engines the potential NOx reduction was an average of 70 percent. These estimates are based on typical operating conditions for each piece of equipment including generator sets, cranes and excavators. As expected, the cost-effectiveness for NOx was higher for earlier models. However, the cost-effectiveness for older engines (pre-2000) was significantly reduced. For example a 1998 crane engine retrofitted with SCR has a cost-effectiveness of $15,100. The crane engines on the Discoverer were built in 1974. Discussions with the State of Alaska permitting engineeers[3] indicates that the State of Alaska has not made BACT decisions with such a high cost-effectiveness for onshore or offshore engines.

Conclusion: Based on the above findings (Items 1-7) SCR technology does not represent BACT for the MLC engines and other smaller engines.

NOx Adsorbers

Under this technology, NOx is adsorbed onto adsorbent chemical-typically barium or other elemental salts. The adsorbent is coated on honeycomb monolith or used in-line with exhaust. Once the catalyst is saturated, the NOx adsorbers must be regenerated. Regeneration requires heat and storage of chemical (e.g. potassium) which results in KNO3. Applications of this technology have successfully achieved Tier 2, Bin 5 NOx emissions levels on light duty vehicles using 15 ppmv sulfur fuel. However we are not aware of any marine applications for this technology. At this time, Johnson Matthey is just starting to look at this technology for stationary applications.[4] Accordingly, this technology is not commercially available for stationary applications, particularly in a marine environment. Additionally, there may be a need for a second adsorber so that regeneration can occur while the second adsorber is placed into operation. Finally, additional storage would be required for chemicals. The second adsorber plus storage for chemicals would require additional space onboard the Discoverer.

Conclusion: There are no vendors that market this technology for stationary applications, particularly marine applications. NOx adsorber technology is not commercially available for the MLC engines and other smaller engines and therefore does not represent BACT for these engines

Lean NOx Catalysts (LNC) or HC SCR

Lean NOx catalysts also known as HC-SCR systems use advanced structural properties in the catalytic coating where hydrocarbons from the exhaust can reduce the nitrogen oxides to nitrogen while the overall exhaust remains lean. The hydrocarbon may be that occurring in the exhaust gas ("native') or may be added to the exhaust gas through injection of a small amount of additional fuel. This has the advantage that no additional reductant source, such as urea, is necessary.

[3] Personal conversation with Sean Lowther of the Alaska Department of Environmental Conservation on November 19, 2009
[4] Personal communication with Jack Carroll of Johnson Matthey on November 9, 2009

Lean NOx catalysts function much like a SCR, i.e. using an outside agent to convert NOx to nitrogen and water. LNCs function by storing NOx on the catalyst surface during efficient lean operation then, under rich conditions, releasing and reducing the trapped NOx. One method of producing this rich environment which regenerates a LNC involves manipulating the fuel injection parameters and throttling the air intake. This process is called in-cylinder regeneration. Under this method, LNCs use an extra shot of diesel fuel injected into the catalyst. The reductant can be HC, CO_2 or H_2. The support substrate provides rich fuel/HC ratios. A HC/NOx ratio of up to 6:1 is needed to achieve good reductions. There may not be sufficient reductant from the diesel exhaust to maintain these ratios. Accordingly it may be necessary to add other reductants for the catalytic conversion of NOx in the engine.

While the Lean NOx Catalyst systems have performed well in some retrofit applications it has been primarily used in on-road diesel applications. The technology has been used in off-road applications to comply with EPA Tier 1 requirements on engines of 100 hp or greater. It has also been installed on backhoes, graders, wheel loaders and back-up generators. However we are not aware of any marine applications at this time. Typical reductions for offroad diesel equipment have ranged from 10% to 25%[5]

One manufacturer has developed a technology which can be classified as a NOx reduction catalyst or HC-SCR technology. The company is Cleaire. The product is referred to as the Longview product. This technology uses the HC (hydrocarbon) in the exhaust and the additional hydrocarbon from fuel injection to reduce NOx to N_2 and O_2. Diesel fuel (HC) is the reducing agent in this system. An advantage to this system is that a second storage tank for the reducing agent is not needed. The reagent injection system draws fuel from the same supply as the engine. In addition, there have been no issues with ammonia slip since diesel fuel and not ammonia or liquid urea is the reducing agent. HC slip is addressed by a DPF (Diesel Particulate Filter) or a DOC (Diesel Oxidation Catalyst) downstream of an NRC. However the system operates best at high loads and is not amenable to long periods of engine idle. There have been very few stationary applications of this technology and while there are no technical reasons the technology would not work, representatives of the company indicated their technology would be more of a demonstration project for this application. Additionally, the application would require an increase in the tail pipe run to approximately a 36 to 48 inch exhaust and would be subject to cooling which would reduce the effectiveness of the systems. Furthermore the lack of available space and the need for technical support during the demonstration of this technology in this application would be difficult to overcome. Cleaire representatives indicated it would not recommend the Longview system as commercial for this application[6]

Conclusion: Neither the Lean NOx Catalysts (LNC) or the HC SCR technology is commercially available for the MLC engines and other smaller engines and therefore does not represent BACT for these engines. Neither of these systems offers the same performance as ammonia-based SCR systems. Depending on the system, a post-injection

[5] WRAP Offroad Diesel Retrofit Guidance Document, Volume 2-Section IV, Emissions Advantage, LLC, November 18,2005
[6] Personal Communication with Tom Swenson of Cleaire on November 19, 2009

system may need to be supplemented by a separate fuel injection system. The potential NOx reductions range from 30% to 50%. Another manufacturer of Lean NOx Catalysts, BASF, is being consulted as to whether or not they have commercially available products that will fit for this application.

Cam Shaft Cylinder Reengineering Kit

The Clean Cam Technology Systems (CCTS) technology consists of specific engine retrofit components, including a proprietary cam shaft. It reduces NOx emissions by increasing the volume of residual exhaust gas that remains in the combustion chamber after the power stroke. These residual exhaust gases absorb heat and reduce the peak combustion temperature, which result in lower NOx emissions. The injection timing can be advanced on some engines to maximize PM emission reductions, or it can be varied to achieve the desired balance of NOx versus PM. The technology has been certified through the CARB's Equipment and Process Certification Program.

The CCTS retrofit kit is designed for older (pre-MY2000) Detroit Diesel Corporation two-stroke engines, model series 71 and 92. It is commercially available and has been installed on engines used in oil well drilling. The manufacturer also indicated that they are moving more towards marine applications and the product has been tested on a U.S. Navy ship.[7] This product can be used with existing California diesel fuel and testing is underway for the use with ULSD. This product was also tested in Alaska, the manufacturer found that the system works fine under the cold climate when using regular diesel fuel, but the performance decreases noticeably when tested with JP8 fuel as the combustion temperature was low and the fuel was not readily combusted.

The manufacturer states that Version I of the CCTS retrofit kit, which are applicable to use on some of the HPUs, Cementing Unit engines, and Logging Unit engines, can achieve emission reductions of no greater than 1.0 g/bhp-hr of hydrocarbons, 8.5 g/bhp-hr of carbon monoxide, 5.8 g/bhp-hr of nitrogen oxides and 0.16 g/bhp-hr of diesel particulate matter. The level for NOx does not confirm the level of control claimed in comments received on this technology claim that this technology (4.5 g/bhp-hr). These claims have been verified by emission testing. However, there is a possible fuel penalty of 0% to 12% depending on the rebuild configuration due to the installation of the Cam Shaft Cylinder Reengineering Kit.

If an engine was previously retrofitted with Injection Timing Retard (ITR) or Exhaust Gas Recirculation (EGR), those systems would need to be removed before modifying with the CCTS kit, although the manufacturer indicated that they have not encountered any 2-stroke engines with EGRs. To further reduce DPM by installing a DPF, the manufacturer suggests that it is possible although it is not commonly done. The exhaust temperature may be low at engine start, but it is increased as the engine starts running so a DPF would theoretically work. The heat absorption by the residual exhaust gases occurs within the camshaft to reduce NOx and does not lower the exhaust temperature.

[7] Personal communication with Clean Cam Technology Systems manufacturer. November, 2009

The cost of the CCTS retrofit kit varies by the size of the engine. The cost of product and the standard rebuild components varies between $4800 and $7500 for a 400hp engine, and it is between $4000 and $6100 for a 275hp engine. There are no additional cost for installation and maintenance. According to the manufacturer, using this product does not affect the OEM engine warranty. The retrofit is usually done by shipping the engines to the CCTS manufacturer or by shipping both the engines and the kit to a local shop

Conclusion: The Cam Shaft Cylinder Reengineering Kit is commercially available for certain DDC diesel engines and the emission reduction levels have been tested and verified. This technology is potentially applicable to the two HPU engines and two of three cementing unit engines onboard the Discoverer.

Exhaust Gas Recirculation (EGR)

Exhaust gas recirculation is an additional method for reducing NOx emissions from diesel engines. Both low and high pressure EGR systems exist. The low-pressure EGR is the most suitable for retrofit applications because it does not require engine modifications[8]. With this technology, the exhaust gases are re-circulated back to the turbocharger or, in the case of naturally aspirated engines to the intake manifold. The temperature of the re-circulated gases is typically lowered with an intercooler. The cooled exhaust gases have a higher heat capacity than air and contain less oxygen thereby lowering NOx formation. Usually diesel particulate filters are part of these systems to ensure large amounts of particulate matter are not re-circulated back to the engine. This technology typically achieves about 40% NOx reductions.

Conclusion: The Exhaust Gas recirculation system is commercially available for certain engines that currently do not have this technology.

Ignition Timing Retard (ITR)

Retarding the ignition timing is based on retarding the start of fuel injection to later in the power cycle. This method increases the volume of the combustion chamber and reduces the residence time of the combustion products thereby reducing the magnitude and duration of peak temperatures. This in turn has the potential for reduced NOx formation. The extent to which the fuel injection can be retarded to reduce NOx emissions varies for each engine, as ITR can increase exhaust temperatures, which may adversely impact exhaust valve life and turbocharger performance, and extreme levels of ITR may result in combustion instability and a loss of power. In addition, the Brake-specific fuel consumption increases. While the maximum power output of the engine is reduced, this reduction is generally minor. In addition, emissions of HC will increase.[9] This increase can be more than offset with a combined use of a diesel particulate filter.

---

[8] Stationary Diesel Engines in the Northeast: An Initial Assessment of the Regional Population, Control Technology Options and Air Quality Policy Issues, Northeast States for Coordinated Air Use Management, June 2003.tionary

[9] Proposed Determination of Reasonably Available Control Technology and Best Available Control Technology for Stationary Spark-Ignited Combustion Engines, California Air Resources Board, April, 2001

For CI engines delaying the fuel injection can reduce NOx by 15 to 30 percent[10]. Based on an average uncontrolled NOx emission level of 15.8 g/hp-hr, the expected range of controlled NOx emissions is from 9.5 to 15.8 g/hp-hr. Available data and information provided by engine manufacturers show that, like AFR, the achievable NOx reductions using ITR are engine-specific. It should also be pointed out that sustained NOx reduction with changes in ambient conditions and engine load, however, is best accomplished using an electronic fuel injection control system. Cost-effectives is quite good and ranges from $42/ton-NOx – $1,210/ton-NOx

Conclusion: While the newer MLC engines represent Tier 3 technology, this technology is feasible on the older engines particularly the 8V-71 engines used for the HPUs and the Cementing Units. It should be noted all engines on this rig including Cement Units are mechanically injected making it more difficult to adjust the engines under ambient conditions found in the artic. It should be pointed out that HC and DPM will increase if only ITR is applied to these engines.

State of California Portable Engine Registration Program

This discussion is included because the State of California imposes more stringent emission regulations than the U.S. national standards. Several of the references in this evaluation also include reference to the work by the California Air Resources Board (CARB). The CARB has created a voluntary Portable Engine Registration Program (PERP), which allows owners and operators to register their portable engines / equipment and operate them throughout the state without obtain permits from local air districts. The current registration requirements for 2009 and 2010 are as follows:

- Engines rated 50 to 75 bhp: Interim Tier 4.
- Engines rated 75 to 750 bhp: Tier 3.
- Engines rated over 750 bhp and over: Tier 2.

Air Pollution Control Districts (APCDs) and Air Quality Management Districts (AQMDs) in California use this program when permitting portable engines including engines that are skid mounted for offshore platforms and drilling operations. For example, the Santa Barbara County APCD defers technology determinations to the CARB Portable Engine Registration Program as BACT and does not require additional controls.

Conclusion: Since Tier 3 is the most stringent non-road emission standards for engines rated between 75 and 750 brake horsepower-hour, operating with Tier 3 engines would be another emission reduction strategy. The three MLC air compressor engines and the Logging wireline unit engine are all Tier 3 and therefore would be allowed to operate under the PERP while meeting CA emission regulations.

Engine Replacement

[10] Stationary Diesel Engines in the Northeast: An Initial Assessment of the Regional Population, Control Technology Options and Air Quality Policy Issues, Northeast States for Coordinated Air Use Management, June 2003.

To replace the cement unit engines with newer Tier 3 engines would require replacement of the entire cementing skid unit. This in turn would require more deck space required and a complete re-install. The newer engines are larger with larger transmissions and will not fit in the existing skid frame. The cost for such a replacement has been estimated by Shell to exceed 1.6 million dollars.

Conclusion: Engine Replacement does not represent BACT for the cementing unit engines. The MLC air compressor engines are new engines, as such replacement is not BACT for these engines. Furthermore, Engine Replacement does not represent BACT for the older engines because it is not cost-effective.

The current logging generator is Tier 2; a Tier 3 engine is available but would require a purchase of $20k to $25k.

From: Kirk Winges [mailto:kwinges@Environcorp.com]
Sent: Wednesday, November 25, 2009 6:44 PM
To: Hastings.Janis@epamail.epa.gov
Cc: Nair.Pat@epamail.epa.gov; boys.Paul@epamail.epa.gov; Wong.Herman@epamail.epa.gov; EPA10 - Dave Bray; greaves.natasha@epamail.epa.gov; vergeront.julie@epamail.epa.gov; Mark Schindler; Susan.Childs@shell.com; Eric Hansen; Rodger Steen; Siler, Duane; Kirk Lilley; keith.craik@shell.com; Lance.Tolson@shell.com; Nicole.StAmand@shell.com; matthews.juliane@epamail.epa.gov
Subject: Supplemental Information

Hi Jan:

As a supplement to the information submitted two days ago on November 23, 2009, I am providing some additional items that came out of conversations with Paul Boys and Pat Nair. These are:

1. A revision to the supplemental BACT analysis to address the topics discussed between Paul Boys and Ron Friesen on November 24.
2. Additional supporting information on the request by Shell to modify the permit requirement to reduce the number of small engine stack tests.

Have a good Thanksgiving weekend.

Kirk

Kirk Winges | Principal Consultant
ENVIRON International Corporation
19020 33rd Avenue W, Suite 310
Lynnwood, WA 98036
V: 425.412.1813 | F: 425.412.1840

BACT Analysis for MLC, HPU Engines and Small Diesel Engines

The current document is being provided as supplemental information for the proposed Shell Chukchi oil exploration permit application. Due to time constraints, the information has not been formatted following formal EPA guidance. However, the information contained here is important and reflects the same issues that are addressed in formal BACT submissions.

Engine Description

MLC Air Compressors and HPU Units (FD-9, 10, 11, 12, and 13)

The Mud Line Cellar (MLC) air compressors (FD-9, 10, and 11) and hydraulic power units or HPU (FD-12 and 13) are used for drilling the MLCs, which is the initial drilling activity lasting about six days. These engines would be operated between 50 and 100 percent capacity to evacuate the MLC. Shell requests Owner Requested Restrictions (ORRs) equivalent to 63 days per season of capacity operation for each of these two source groups. The air compressors are to be new Tier 3 engines with no add-on emission controls, while the HPUs are existing engines with catalytic diesel particulate filters (CDPF) for control of oxidizable emissions (volatile organics, carbon monoxide, and soluble particulate matter) and solid particulate matter.

Table X-1 identifies the MLC Air Compressor engine size, make and model numbers. As stated above, these engines will be new engines which are designed to meet new Tier 3 engine regulations, which are the most stringent emissions standards for commercially available engines with this engine size.

Table X-1. MLC Air Compressor Tier 3 Engines

Unit	Manufacturer	Model No	Size (hp)	Load %	Operating factor (days per year)
FD-9	Caterpillar	C-15	540	50 to 100	63
FD-10	Caterpillar	C-15	540	50 to 100	63
FD-11	Caterpillar	C-15	540	50 to 100	63

Table X-2 identifies the HPU engine sizes, make and model numbers. As stated above, the HPUs are existing engines with catalytic diesel particulate filters (CDPF) for control of VOCs, CO and PM. The engines were built in 1978 and 1979.

Table X-2. Hydraulic Power Units

Unit	Manufacturer	Model No	Size (hp)	Load %	Operating factor (days per year)
FD-12	Detroit	8V71	250	50 to 100	63
FD-13	Detroit	8V71	250	50 to 100	63

The MLC equipment is temporary equipment that is loaded onto the drill ship for the MLC drilling operation that occurs at the beginning of the well drilling program. The two hydraulic power units (HPUs) and the three air compressor units (ACUs) are each powered by diesel engines. These units have been designed to be portable so they can be removed from the drill ship at any time, should the deck space be required for other equipment or materials associated with the well. However, operationally, the preference is to have these units available on board the drill ship to minimize time required to set up the units for a second MLC operation if so required, as well as to reduce the potential of damage or corrosion that might occur if they are stored on the deck of an anchor handling supply vessel. Figure X-1 below shows the location and size of the Air Compressor units. The air compressors are quite large (20 ft x 7.3 ft w x 8 ft h each), and as a result there is a limited number of locations that will allow easy access for operations and maintenance. The area chosen was the port forward casing racks near the drill floor, as shown by the pictures in Figure X-1.

Figure X-1. Air Compressor Units for MLC

Operationally, the HPUs need to be located as close to well center as possible to reduce the length of the umbilical hose that is required to supply the power fluid to the MLC bit. In 2007, the location that was seen to be best to store and operate the HPUs was the top of the BOP 'garage' (See Figure X-2). Although limited on space to layout the HPUs (Figure X-3) and the hose reel (Figure X-4), the proximity to and straight line access to the drill floor was an advantage. The 'Top of BOP garage' photo shows the location relative to the drill floor and the 'Hyd Unit #2' photo shows one of the units in place. Each HPU is approximately 12 ft x 7 ft w x 8 ft h.

Figure X-2. Location for the HPUs

Figure X-3. Hydraulic Power Unit No.2

Figure X-4. HPU Hose Reel

Figure X-5 Port and Starboard Deck Cranes

Cranes (FD-14 and 15)
The Discoverer has two MY 1974 cranes mounted on pedestals that are used intermittently to move materials around the deck and to on-load supplies from the re-supply ship. The engine operating rates are highly variable, and depend on the load being moved. Shell proposes an ORR for the combined operation of the cranes equivalent to 63 days per season of capacity operation, to be demonstrated through tracking of fuel consumption. The crane engines have CDPFs for control of soluble organic fraction and solid particulate matter, carbon monoxide, and volatile organics. The crane engines were built in 1974. A summary of the crane engines are shown in Table X-3.

Table X-3. Crane engine sizes, make and model numbers..

Unit	Manufacturer	Model No	Size (hp)	Load %	Operating factor (days per year)
FD-14	Caterpillar	D343	365	variable	63
FD-15	Caterpillar	D343	365	variable	

Cement Units (FD-16, 17, and 18)

Three cementing units are used intermittently to fix casings in the hole and seal the drill hole when drilling is interrupted or ended. The cementing units force a slurry of cement and additives down the casing and into the annular space between the casing and the wall of the borehole when the drill pipe is pulled out of the hole, or for P&A'ing wells. The cement units are also used intermittently as high pressure pumps for hydrostatically testing well equipment and drilling components, such as the wellhead connections, the blowout preventer and other connections.

Because drilling cannot take place simultaneously with cementing, the generators will be operating only at low loads when cementing occurs. This decrease in generator emissions is not taken into account in the impact analysis herein. Shell requests an ORR equivalent to capacity operation for 27.8 percent of the day for the three cementing unit engines and the two logging units (discussed below) combined, to be demonstrated through tracking of fuel consumption. The cementing units are equipped with CDPFs for control of volatile organics, carbon monoxide, and organic particulate matter. Table X-3 below identifies the cementing unit engine characteristics.

Table X-3. Cementing Units

Unit	Manufacturer	Model No	Size (hp)	Load %	Operating factor (days per year)
FD-16	Detroit	8V-71N	365	Low	168
FD-17	Detroit	8V-71N	365	Low	168
FD-18	GM	3-71	147	Low	168

Logging Units (FD-19 and 20)

The Logging winch unit and electrical power generator are powered by diesel engines. The logging equipment is used to gather information from the well after the drill stem is removed. When the logging equipment is operated, the cementing units would be off and the drilling generators would be operating at low load. The logging units operate at variable and unpredictable loads. The logging units also have CDPFs for control of volatile organics, carbon monoxide, and organic and solid particulate matter.

The electrical generator has a Tier 2 MMG35 generator engine, as shown in Figure X-6. The load for the generator varies depending on the type of operation and is summarized as follows, but the generators are very lightly loaded most of the time.

- Data Acquisition systems – Steady load ~5-10KW
- Lights – Varying load 0 – 3 KW.
- Heating – Varying load 0 – 20 KW

Figure X-6. Logging Generators

The logging winch unit meets the Tier 3 engine standard. The loads on the winch unit also vary and are summarized as follows:

- <5% during rig-up, rig-down, and when stopped in a well.
- Negative while descending into the well. While the tools are moving downward the engine is acting as a brake on the hydraulic system.
- ~5-15% of full power while logging the well dependent on tension and logging speed.
- 20-100% when retrieving the tools after logging, with the power need dependent on tension and well depth. With the power level dropping constantly as tension drops due cable retrieval. During this phase the load goes to zero every time the winch is stopped.

A logging job does not proceed smoothly through the four phases described above in a progression. During decent the winch is reversed several times to check tension, to clear obstructions, and to run repeat section. During retrieval the winch is often stopped when an obstruction is encountered or a wrap is missed.

To simplify the impact analysis, we elected to evaluate the logging unit emissions using cementing unit engines. This is a conservative assumption because the logging unit engines are smaller and have lower emission factors than the cementing unit engines.

Because the logging engines and the cementing unit engines cannot be used at the same time, Shell proposes to apply the same ORR to both the cementing and the logging units: the cementing units and logging units will operate no more than 27.8 percent of capacity in any calendar day. In other words, the daily fuel consumption restriction on the cementing units is to include use of the logging units. A summary of the logging unit engine characteristics are shown in Table X-4. Only one John Deere unit is required.

Either unit 3248 or 3285 will be sent to the rig prior to the start of the drilling season. Both John Deere units were built in 2005 and the Caterpillar unit was built in 2008. Note that unit 1723 is listed as a Caterpillar C7 engine, which differs from the original permit application, which showed an older Detroit Diesel 8V-71N engine. Since the application was submitted, the older engine was replaced with the larger unit. These units are skid-mounted, and if EPA desires the older engine can be replaced on the ship. However, the newer engine, although twice as large at 250 horsepower, actually has lower emissions than the original engine since the newer engine is a Tier 3 engine. For example, for NOx, the emissions from the older engine were calculated to be 3.31 lb/hr, while the newer 250 hp Tier 3 engine has maximum potential emissions of only 1.68 lb/hr. But actual emissions will be even less for this engine, since it will operate under the same fuel restriction in the permit for the older engine. Accordingly, in this BACT assessment, we have assumed EPA's preference will be for the newer , lower emitting engine.

Table X-4. Logging Units (Generators and Winch Units) model year

Unit	Manufacturer	Model No	Size (hp)	Load %	Operating factor (days per year)
3248	John Deere	PE4020TF270D	35	Light and variable	168
3285	John Deere	PE4020TF270D	35	Light and variable	168
1723	Caterpillar	C7	250	Light and variable	168

BACT Evaluation

The Best Available Control Technology (BACT) evaluation below identifies all the potentially available control options for the engines identified above. The control technologies discussion is a top down analysis ranging from the most effective technology to the least effective. The discussion applies to all the engines including the MLC compressor engines and the smaller compression ignition (CI) internal combustion engines with exceptions noted. For each technology a conclusion is reached as to whether the technology represents BACT for the engines considered in this analysis.

Selective Catalytic Reduction (SCR)

While SCR is proposed for the main generator sets, several issues have been identified with applying SCR to the smaller air compressor engines, HPUs and other smaller CI engines. The six Caterpillar D399 generator sets (1,325 hp each) provide the primary systems power for drilling and ship utilities and are operational at varying load levels throughout the drilling process. Normally, no more than five engines will operate at one time, leaving one as a spare. For these Gensets, Shell plans to utilize ~42% concentration urea, which corresponds to salt out temperature of approx 40 Degrees F and an exhaust stream temperature to be maintained at 300 to 400°C. For these larger engines, it may be

easier to maintain these temperatures due to their operating profile. However, the smaller engines operate on a more intermittent basis with a wide range of loads. The figures above show that the engines are located on deck where space is extremely limited.

The following analysis addresses the application of SCR to these smaller engines:

1. The dynamic loading of the smaller engines (swings of up to 50%) can be expected as the diesel engines are worked. These changing load demands will cause the overall system to be ineffective at scrubbing NOx emissions from the exhaust gasses. Accordingly the engines may not be sufficiently loaded to achieve exhaust temperatures necessary for optimal performance of the catalyst. Under these conditions, NO_x reduction is critically restrained. It is estimated that NOx reduction may be as little as 20% at exhaust temperatures below 400°F (204 ^{o}C)[1].

2. These engines will be operating under cold climate conditions in the Arctic, and the fact that they are all located on the topsides deck of the rig severely reduces their ability to maintain effectively high temperatures.

3. Urea concentration is directly correlated to salt out temperature. For smaller engines with lower exhaust temperatures, the urea concentration would logically need to increase to get the same NOx emissions reduction as compared to the larger Genset engines. If urea was used on deck in the Arctic, it would be extremely difficult (although not impossible) to keep the temperatures high enough to stay in solution. If the salt was allowed to precipitate out, there would be a continuous build up of salt on the SCR catalyst and a corresponding increase in engine backpressure, which ultimately could lead to catastrophic damage to the engine. A Catalyst vendor indicated a concern with exposing the catalysts to artic temperatures without additional insulation and heat tracers.[2]

4. Due to the characteristics described in items 1 to 3 above, there is potential for catalyst fouling and disintegration[1]

5. Ammonia slip can occur when catalyst temperatures are not in the optimal range for the reaction or when too much ammonia is injected into the process. As the temperature range of these smaller diesel engines are lower than that of larger generator diesel sets (such as the D399 Gensets), the effectiveness will be significantly diminished.

6. As shown in Figures X-1 to X-4 space is severely limited. In addition to retrofitting the engines with the SCR equipment, additional space is required onboard to store the reductant. Also, the logging winch units are designed to be space efficient portable systems. Due to increasing well depths the units have been upgraded from 170 HP non-tiered engines to 300 HP Tier 2 systems in the

[1] Gaitley, J., The Operation of Selective Catalytic Reduction systems on Mobile Offshore Drilling Units, Transocean, September 9m 2009.
[2] Personal conversation with Jeremy Harris of Johnson Matthey on November 24, 2009.

same space. The addition of turbochargers, charge air coolers, and larger silencers left no room for a SCR without a total redesign. As shown in Figures X-1 to X-4, space is extremely limited for all the other smaller engines as well. Furthermore, taking additional deck space for storage of reductants and other equipment would compromise the maneuverability during drilling operations. Attached is a drawing of the catalyst size and a drawing of the SCR injection system for the C-15 compressor engine[3]. As shown on the drawing each compressor engine would need to be retrofitted with the Catalyst and each engine would require the SCR injection system which measures approximately 5.5 ft x 3.5 ft. As shown in Figure X-1, there is virtually no additional space that would accommodate these requirements.

7. The cost effectiveness of applying SCR has been calculated by EPA in it's Cost-Effectiveness of Reducing Particulate Matter and Nitrogen Oxides Emissions from Heavy-Duty Non-road Diesel Engines through Retrofits[4]. The cost-effectiveness for non-road equipment was calculated ranging from approximately $7,400 to $19,000 per ton of NOx reduced. For non-road engines the potential NOx reduction was an average of 70 percent. These estimates are based on typical operating conditions for each piece of equipment including generator sets, cranes and excavators. As expected, the cost-effectiveness for NOx was higher for earlier models. However, the cost-effectiveness for older engines (pre-2000) was significantly reduced. This is consistent with calculations of the cost-effectiveness for retrofitting the C-15 compressor engines (engine specifications attached). Based on the costs quoted by Johnson Matthey[5], the cost-effectiveness for retrofitting SCR for the compressor engines was calculated at $13,000 to $15,000 per ton of NOx reduced depending on the assumptions made for the operational characteristics of the engine. For example a 1998 crane engine retrofitted with SCR has a cost-effectiveness of $15,100. The crane engines on the Discoverer were built in 1974. Discussions with the State of Alaska permitting engineeers[6] indicates that the State of Alaska has not made BACT decisions with such a high cost-effectiveness for onshore or offshore engines.

Conclusion: Based on the above findings (Items 1-7) SCR technology does not represent BACT for the MLC compressor engines and other smaller engines. This conclusion is based primarily on the lack of space required for retrofitting the engines with SCR catalysts and injection systems. Furthermore, additional issues related to the operation of these systems in artic conditions raised issues with operation of the catalysts in cold temperatures without additional insulation and heat tracers. Finally, even if sufficient

[3] Quote from Johnson Matthey by Jeremy Harris on November 24, 2009. See attached drawings and associated costs.
[4] Diesel Retrofit Technology, An analysis of the Cost-Effectiveness of Reducing Particulate Matter and Nitrogen Oxides Emissions form Heavy-Duty Nonroad Diesel Engines Through Retrofits, Office of Transportation and Air Quality, USEPA, EPA420-R-07-005, May 2007
[5] Quote from Johnson Matthey by Jeremy Harris on November 24, 2009. See attached drawings and associated costs
[6] Personal conversation with Sean Lowther of the Alaska Department of Environmental Conservation on November 19, 2009

spacer were available, the cost-effectiveness would be at the upper end of the acceptable cost-effectiveness for NOx technologies

NOx Adsorbers

Under this technology, NOx is adsorbed onto adsorbent chemical-typically barium or other elemental salts. The adsorbent is coated on honeycomb monolith or used in-line with exhaust. Once the catalyst is saturated, the NOx adsorbers must be regenerated. Regeneration requires heat and storage of chemical (e.g. potassium) which results in KNO3. Applications of this technology have successfully achieved Tier 2, Bin 5 NOx emissions levels on light duty vehicles using 15 ppmv sulfur fuel. However we are not aware of any marine applications for this technology. At this time, Johnson Matthey is just starting to look at this technology for stationary applications.[7] Accordingly, this technology is not commercially available for stationary applications, particularly in a marine environment. Additionally, there may be a need for a second adsorber so that regeneration can occur while the second adsorber is placed into operation. Finally, additional storage would be required for chemicals. The second adsorber plus storage for chemicals would require additional space onboard the Discoverer.

Conclusion: There are no vendors that market this technology for stationary applications, particularly marine applications. NOx adsorber technology is not commercially available for the MLC engines and other smaller engines and therefore does not represent BACT for these engines

Lean NOx Catalysts (LNC) or HC SCR

Lean NOx catalysts also known as HC-SCR systems use advanced structural properties in the catalytic coating where hydrocarbons from the exhaust can reduce the nitrogen oxides to nitrogen while the overall exhaust remains lean. The hydrocarbon may be that occurring in the exhaust gas ("native') or may be added to the exhaust gas through injection of a small amount of additional fuel. This has the advantage that no additional reductant source, such as urea, is necessary.

Lean NOx catalysts function much like a SCR, i.e. using an outside agent to convert NOx to nitrogen and water. LNCs function by storing NOx on the catalyst surface during efficient lean operation then, under rich conditions, releasing and reducing the trapped NOx. One method of producing this rich environment which regenerates a LNC involves manipulating the fuel injection parameters and throttling the air intake. This process is called in-cylinder regeneration. Under this method, LNCs use an extra shot of diesel fuel injected into the catalyst. The reductant can be HC, CO_2 or H_2. The support substrate provides rich fuel/HC ratios. A HC/NOx ratio of up to 6:1 is needed to achieve good reductions. There may not be sufficient reductant from the diesel exhaust to maintain these ratios. Accordingly it may be necessary to add other reductants for the catalytic conversion of NOx in the engine.

[7] Personal communication with Jack Carroll of Johnson Matthey on November 9, 2009

While the Lean NOx Catalyst systems have performed well in some retrofit applications it has been primarily used in on-road diesel applications. The technology has been used in off-road applications to comply with EPA Tier 1 requirements on engines of 100 hp or greater. It has also been installed on backhoes, graders, wheel loaders and back-up generators. However we are not aware of any marine applications at this time. Typical reductions for offroad diesel equipment have ranged from 10% to 25%[8]

One manufacturer has developed a technology which can be classified as a NOx reduction catalyst or HC-SCR technology. The company is Cleaire. The product is referred to as the Longview product. This technology uses the HC (hydrocarbon) in the exhaust and the additional hydrocarbon from fuel injection to reduce NOx to N_2 and O_2. Diesel fuel (HC) is the reducing agent in this system. An advantage to this system is that a second storage tank for the reducing agent is not needed. The reagent injection system draws fuel from the same supply as the engine. In addition, there have been no issues with ammonia slip since diesel fuel and not ammonia or liquid urea is the reducing agent. HC slip is addressed by a DPF (Diesel Particulate Filter) or a DOC (Diesel Oxidation Catalyst) downstream of an NRC. However the system operates best at high loads and is not amenable to long periods of engine idle. There have been very few stationary applications of this technology and while there are no technical reasons the technology would not work, representatives of the company indicated their technology would be more of a demonstration project for this application. Additionally, the application would require an increase in the tail pipe run to approximately a 36 to 48 inch exhaust and would be subject to cooling which would reduce the effectiveness of the systems. Furthermore the lack of available space and the need for technical support during the demonstration of this technology in this application would be difficult to overcome. Cleaire representatives indicated it would not recommend the Longview system as commercial for this application[9]

Conclusion: Neither the Lean NOx Catalysts (LNC) or the HC SCR technology is commercially available for the MLC engines and other smaller engines and therefore does not represent BACT for these engines. Neither of these systems offers the same performance as ammonia-based SCR systems. Depending on the system, a post-injection system may need to be supplemented by a separate fuel injection system. The potential NOx reductions range from 30% to 50%. Another manufacturer of Lean NOx Catalysts, BASF, is being consulted as to whether or not they have commercially available products that will fit for this application.

Cam Shaft Cylinder Reengineering Kit

The Clean Cam Technology Systems (CCTS) technology consists of specific engine retrofit components, including a proprietary cam shaft. It reduces NOx emissions by increasing the volume of residual exhaust gas that remains in the combustion chamber after the power stroke. These residual exhaust gases absorb heat and reduce the peak combustion temperature, which result in lower NOx emissions. The injection timing can

[8] WRAP Offroad Diesel Retrofit Guidance Document, Volume 2-Section IV, Emissions Advantage, LLC, November 18,2005
[9] Personal Communication with Tom Swenson of Cleaire on November 19, 2009

be advanced on some engines to maximize PM emission reductions, or it can be varied to achieve the desired balance of NOx versus PM. The technology has been certified through the CARB's Equipment and Process Certification Program.

The CCTS retrofit kit is designed for older (pre-MY2000) Detroit Diesel Corporation two-stroke engines, model series 71 and 92. It is commercially available and has been installed on engines used in oil well drilling. The manufacturer also indicated that they are moving more towards marine applications and the product has been tested on a U.S. Navy ship.[10] This product can be used with existing California diesel fuel and testing is underway for the use with ULSD. This product was also tested in Alaska, the manufacturer found that the system works fine under the cold climate when using regular diesel fuel, but the performance decreases noticeably when tested with JP8 fuel as the combustion temperature was low and the fuel was not readily combusted.

The manufacturer states that Version I of the CCTS retrofit kit, which are applicable to use on some of the HPUs, Cementing Unit engines, and Logging Unit engines, can achieve emission reductions of no greater than 1.0 g/bhp-hr of hydrocarbons, 8.5 g/bhp-hr of carbon monoxide, 5.8 g/bhp-hr of nitrogen oxides and 0.16 g/bhp-hr of diesel particulate matter. These claims have been verified by emission testing. However, there is a possible fuel penalty of 0% to 12% depending on the rebuild configuration due to the installation of the Cam Shaft Cylinder Reengineering Kit.

If an engine was previously retrofitted with Injection Timing Retard (ITR) or Exhaust Gas Recirculation (EGR), those systems would need to be removed before modifying with the CCTS kit, although the manufacturer indicated that they have not encountered any 2-stroke engines with EGRs. To further reduce DPM by installing a DPF, the manufacturer suggests that it is possible although it is not commonly done. The exhaust temperature may be low at engine start, but it is increased as the engine starts running so a DPF would theoretically work. The heat absorption by the residual exhaust gases occurs within the camshaft to reduce NOx and does not lower the exhaust temperature.

The cost of the CCTS retrofit kit varies by the size of the engine. The cost of product and the standard rebuild components varies between $4800 and $7500 for a 400hp engine, and it is between $4000 and $6100 for a 275hp engine. There are no additional cost for installation and maintenance. According to the manufacturer, using this product does not affect the OEM engine warranty. The retrofit is usually done by shipping the engines to the CCTS manufacturer or by shipping both the engines and the kit to a local shop

Conclusion: The Cam Shaft Cylinder Reengineering Kit is commercially available for certain DDC diesel engines and the emission reduction levels have been tested and verified. This technology is potentially applicable to the two HPU engines and two of three cementing unit engines onboard the Discoverer, but there are problems associated with its application on the Discoverer. The fuel penalty could potentially increase emissions of some pollutants and the Discoverer would need to be taken out of service while this engine retrofit is being performed. This technology has not been tried in the

[10] Personal communication with Clean Cam Technology Systems manufacturer. November, 2009

artic and is not recommended by Shell as BACT for the current application due to the small potential savings in NOx emissions from these small and infrequently used engines.

Exhaust Gas Recirculation (EGR)

Exhaust gas recirculation is an additional method for reducing NOx emissions from diesel engines. Both low and high pressure EGR systems exist. The low-pressure EGR is the most suitable for retrofit applications because it does not require engine modifications[11]. With this technology, the exhaust gases are re-circulated back to the turbocharger or, in the case of naturally aspirated engines to the intake manifold. The temperature of the re-circulated gases is typically lowered with an intercooler. The cooled exhaust gases have a higher heat capacity than air and contain less oxygen thereby lowering NOx formation. Usually diesel particulate filters are part of these systems to ensure large amounts of particulate matter are not re-circulated back to the engine. As mentioned earlier, the HPU units, the Cementing Units and the Crane engines all have Diesel Particulate Filters installed. This technology typically achieves about 40% NOx reductions. Cost-effectiveness for installing EGR on these engines is in the neighborhood of $3,500 per ton of NOx[12]. However, the CDPF requires a degree of combustion control, so it is likely that EGR will have a negative effect on this control. Due to these energy and environmental considerations, neither EGR nor ITR is considered

Conclusion: The Exhaust Gas recirculation system is commercially available for certain engines that currently do not have this technology, but it is not recommended as BACT for the reasons stated above.

Ignition Timing Retard (ITR)

Retarding the ignition timing is based on retarding the start of fuel injection to later in the power cycle. This method increases the volume of the combustion chamber and reduces the residence time of the combustion products thereby reducing the magnitude and duration of peak temperatures. This in turn has the potential for reduced NOx formation. The extent to which the fuel injection can be retarded to reduce NOx emissions varies for each engine, as ITR can increase exhaust temperatures, which may adversely impact exhaust valve life and turbocharger performance, and extreme levels of ITR may result in combustion instability and a loss of power. In addition, the Brake-specific fuel consumption increases. While the maximum power output of the engine is reduced, this reduction is generally minor. In addition, emissions of HC will increase.[13] This increase can be more than offset with a combined use of a diesel particulate filter.

---

[11] Stationary Diesel Engines in the Northeast: An Initial Assessment of the Regional Population, Control Technology Options and Air Quality Policy Issues, Northeast States for Coordinated Air Use Management, June 2003.tionary

[12] Evaluation of Candidate Mobilke Source Control Measures for LADCO States in 2009 and 3012, ENVIRON International Corporation, March 21, 2007.

[13] Proposed Determination of Reasonably Available Control Technology and Best Available Control Technology for Stationary Spark-Ignited Combustion Engines, California Air Resources Board, April, 2001

For CI engines delaying the fuel injection can reduce NOx by 15 to 30 percent[14]. Based on an average uncontrolled NOx emission level of 15.8 g/hp-hr, the expected range of controlled NOx emissions is from 9.5 to 15.8 g/hp-hr. Available data and information provided by engine manufacturers show that, like AFR, the achievable NOx reductions using ITR are engine-specific. It should also be pointed out that sustained NOx reduction with changes in ambient conditions and engine load, however, is best accomplished using an electronic fuel injection control system. Cost-effectives is quite good and ranges from $42/ton-NOx – $1,210/ton-NOx

Conclusion: While the newer MLC compressor engines represent Tier 3 technology, ITR is feasible on the older engines particularly the 8V-71 engines used for the HPUs and the Cementing Units. It should be noted all engines on this rig including Cement Units are mechanically injected making it more difficult to adjust the engines under ambient conditions found in the artic. It should be pointed out that HC and DPM will increase if only ITR is applied to these engines. ITR and AC reduce NOx at the expense of incomplete combustion; this increases PM, VOC, and CO emissions, reduced fuel economy, and contaminates the lube oil with soot.24 Furthermore, as previously discussed Engines FD-12 through FD-20 will be equipped with CDPF controls to reduce PM and CO emissions. CDPF requires a degree of combustion control, so it is likely that ITR will have a negative effect on this control. Due to these energy and environmental considerations, neither ITR nor AC is considered BACT.

State of California Portable Engine Registration Program

This discussion is included because the State of California imposes more stringent emission regulations than the U.S. national standards. Several of the references in this evaluation also include reference to the work by the California Air Resources Board (CARB). The CARB has created a voluntary Portable Engine Registration Program (PERP), which allows owners and operators to register their portable engines / equipment and operate them throughout the state without obtaining permits from local air districts. The current registration requirements for 2009 and 2010 are as follows:

- Engines rated 50 to 75 bhp: Interim Tier 4.
- Engines rated 75 to 750 bhp: Tier 3.
- Engines rated over 750 bhp and over: Tier 2.

Air Pollution Control Districts (APCDs) and Air Quality Management Districts (AQMDs) in California use this program when permitting portable engines including engines that are skid mounted for offshore platforms and drilling operations. For example, the Santa Barbara County APCD[15] defers technology determinations to the

[14] Stationary Diesel Engines in the Northeast: An Initial Assessment of the Regional Population, Control Technology Options and Air Quality Policy Issues, Northeast States for Coordinated Air Use Management, June 2003.

[15] Personal conversation with Terry Snyder of the Santa Barbara County Air Pollution Control District on November 17, 2009

CARB Portable Engine Registration Program as BACT and does not require additional controls for these engines.

Conclusion: Since Tier 3 is the most stringent non-road emission standards for engines rated between 75 and 750 brake horsepower-hours, operating with Tier 3 engines would be another emission reduction strategy. The three MLC air compressor engines and the Logging wireline unit engines are all Tier 3 and therefore would be allowed to operate under the PERP while meeting CA emission regulations.

Engine Replacement

To replace the cement unit engines with newer Tier 3 engines would require replacement of the entire cementing skid unit. This in turn would require more deck space required and a complete re-install. The newer engines are larger with larger transmissions and will not fit in the existing skid frame. The cost for such a replacement has been estimated by Shell to exceed 1.6 million dollars. The cost-effectiveness for this option would be $32,940 for the cementing units with the Detroit 8V71 engines and $36,373 for the cementing units with the GM 3-71 engine[16].

To replace the HPU units with newer Tier 3 engines would cost $100,000 for each of the two Detroit 8V71 engines.[17] The cost-effectiveness for this option would be $9,200 per ton of NOx reduced. Overall NOx reductions would be 1.34 tons per year or 43 lbs of NOx per day.

[The above description assumes 24 hours of operation over 63 days. For 24 hours of operation over 40 days, the cost effectiveness is $14,500 per ton of NOx reduced, and the overall NOx reductions would be 0.85 tons per year or 27 lbs of NOx per day.]

Replacing the crane engines would be even less cost-effective. We estimated a cost of $120,000 for each engine and a cost effectiveness of nearly $21,812 per ton of NOx reduced. Overall NOx reductions would be 0.67 tons per year or 21 lbs of NOx per day.

[This above description assumes 8 hours of operation over 63 days.]

Conclusion: Engine Replacement does not represent BACT for the cementing unit engines. The MLC air compressor engines are new engines, as such replacement is not BACT for these engines. Furthermore, Engine Replacement does not represent BACT for the older engines because it is not cost-effective.

The current logging generator is Tier 2; a Tier 3 engine is available but would require a purchase of $20k to $25k. Give the very low NOx emissions of the logging generator,

[16] Proposed Requirements for Stationary Diesel In-Use Agricultural Engines, Appendix F, Economic Analysis Methodology, Diesel Engine Costs, Page 3, September 6, 2006
[17] Proposed Requirements for Stationary Diesel In-Use Agricultural Engines, Appendix F, Economic Analysis Methodology, Diesel Engine Costs, Page 3, September 6, 2006

0.3 pounds per hour and less than 0.7 tons per year potential emissions, this engine replacement is not judged BACT.

DIESEL GENERATOR SET

CATERPILLAR®

Image shown may not reflect actual package.

STANDBY
450 ekW 563 kVA
60 Hz 1800 rpm 480 Volts

Caterpillar is leading the power generation marketplace with Power Solutions engineered to deliver unmatched flexibility, expandability, reliability, and cost-effectiveness.

FEATURES

FUEL/EMISSIONS STRATEGY
- EPA Tier 3 and Low Emissions

DESIGN CRITERIA
- The generator set accepts 100% rated load in one step per NFPA 110 and meets ISO 8528-5 transient response.

UL 2200
- UL 2200 listed packages available. Certain restrictions may apply. Consult with your Caterpillar Dealer.

FULL RANGE OF ATTACHMENTS
- Wide range of bolt-on system expansion attachments, factory designed and tested
- Flexible packaging options for easy and cost effective installation

SINGLE-SOURCE SUPPLIER
- Fully prototype tested with certified torsional vibration analysis available

WORLDWIDE PRODUCT SUPPORT
- Caterpillar® dealers provide extensive post sale support including maintenance and repair agreements
- Caterpillar dealers have over 1,600 dealer branch stores operating in 200 countries
- The Cat® S•O•S℠ program cost effectively detects internal engine component condition, even the presence of unwanted fluids and combustion by-products

CAT® C15 ATAAC DIESEL ENGINE
- Utilizes ACERT™ Technology
- Reliable, rugged, durable design
- Field-proven in thousands of applications worldwide
- Four-stroke diesel engine combines consistent performance and excellent fuel economy with minimum weight
- Electronic engine control

CAT GENERATOR
- Matched to the performance and output characteristics of Caterpillar engines
- Load adjustment module provides engine relief upon load impact and improves load acceptance and recovery time
- UL 1446 Recognized Class H insulation

CAT EMCP 3 SERIES CONTROL PANELS
- Simple user friendly interface and navigation
- Scalable system to meet a wide range of customer needs
- Integrated Control System and Communications Gateway

FACTORY INSTALLED STANDARD & OPTIONAL EQUIPMENT

System	Standard	Optional
Air Inlet	• Light Duty Air filter	• Canister Style Air Cleaners • Air Cleaner - single stage • Dual element • Heavy duty
Cooling	• Radiator package mounted(50ºC) • Coolant drain line with valve terminated at edge of base • Fan and belt guards • Coolant level sight gauge • Caterpillar Extended Life Coolant	• Radiator removal • Radiator duct flange & guard
Exhaust	• Dry exhaust manifold • Flanged faced outlets • Stainless Steel Flex with split-cuff connection	• Mufflers • Manifold & Turbocharger guards • Elbows
Fuel	• Primary fuel filter with integral water separator • Secondary fuel filters • Fuel priming pump • Engine fuel transfer pump • Flex fuel lines • Fuel cooler* *Not included with packages without radiators	• Integral UL listed fuel tank base • Manual transfer pump • Fuel level switch
Generator	• Class H insulation • R448 voltage regulator with load adjustment module • IP23 Protection	• CDVR with KVAR/PF control • Oversize and premium generators • Bearing/Stator temperature detection (premium generator) • 3 phase sensing • Anti-condensation space heaters • Cable access box • Reactive droop
Power Termination	• Power Terminator Strips Mounted inside Power Center • Segregated low voltage wiring panel	• Circuit breakers, UL listed, 3 pole • Circuit breakers, IEC compliant, 3 pole • Circuit breaker Shunt trip • Circuit breaker Auxillary contact • Top & bottom power cable entry • Floor standing UL breakers
Governor	• ADEM™A4	• Load share module
Control Panels	• EMCP 3.1 (rear mounted) • Speed adjust • Emergency stop pushbutton • Voltage adjust	• EMCP 3.2 & EMCP 3.3 (can be RH mounted) • Local annuniciator modules (NFPA 99/110) • Remote annunicator modules (NFPA 99/110) • Discrete I/O module
Lube	• Lubricating oil and filter • Oil drain line with valves • Fumes disposal • Gear type lube oil pump	• Manual sump pump
Starting/Charging	• 24 volt starting motor • Battery with rack and cables (dry) • 45 amp charging alternator	• Jacket water heater with shut off valves • Block heater • Ether starting aids • Battery disconnect switch • Battery chargers (5 & 10 amp) • Oversized batteries
General	• Paint - Caterpillar yellow except rails and radiators gloss black • Flywheel and flywheel housing - SAE No.1	

STANDBY 450 ekW 563 kVA

60 Hz 1800 rpm 480 Volts

CATERPILLAR®

SPECIFICATIONS

CAT GENERATOR

Frame size..... LC6114D
Excitation..... Self Excitation
Pitch.....0.6667
Number of poles.....4
Number of bearings..... Single Bearing
Number of Leads..... 12
Insulation..... UL 1446 Recognized Class H with tropicalization and antiabrasion
- Consult your Caterpillar dealer for available voltages
IP Rating.....IP23
Alignment..... Pilot Shaft
Overspeed capability..... 125% of rated
Wave form Deviation (Line to Line)..... 2%
Voltage regulator..... Single phase sensing with selectible volts/Hz
Voltage regulation.....Less than +/- 1/2% (steady state)
Less than +/- ½% (w/ 3% speed change)
Telephone influence factor.....Less than 50
Harmonic Distortion.....Less than 5%

CAT DIESEL ENGINE

C15 ATAAC, L-6, 4-stroke water-cooled diesel
Bore..... 137.20 mm (5.4 in)
Stroke..... 171.40 mm (6.75 in)
Displacement.....15.20 L (927.56 in^3)
Compression Ratio..... 16.1:1
Aspiration..... ATAAC
Fuel System.....MEUI
Governor Type..... Caterpillar ADEM control system

CAT EMCP 3 CONTROL PANELS

- EMCP 3.1 (Standard)
- EMCP 3.2 / EMCP 3.3 (Option)
- Single location customer connector point
- True RMS metering, 3-phase
- Controls
  - Run / Auto / Stop control
  - Speed Adjust
  - Voltage Adjust
  - Emergency Stop Pushbutton
  - Engine cycle crank
- Digital Indication for:
  - RPM
  - Operating hours
  - Oil Pressure
  - Coolant temperature
  - System DC volts
  - L-L volts, L-N volts, phase amps, Hz
  - ekW, kVA, kVAR, kW-hr, %kW, PF (EMCP 3.2 / 3.3)
- Shutdowns with common indicating light for:
  - Low oil pressure
  - High coolant temperature
  - Low coolant level
  - Overspeed
  - Emergency stop
  - Failure to start (overcrank)
- Programmable protective relaying functions: (EMCP 3.2 & 3.3)
  - Under and over voltage
  - Under and over frequency
  - Overcurrent (time and inverse time)
  - Reverse power (EMCP 3.3)
- MODBUS isolated data link, RS-485 half-duplex (EMCP 3.2 & 3.3)
- Options
  - Vandal door
  - Local annunciator module
  - Remote annunciator module
  - Input / Output module
  - RTD / Thermocouple Modules
  - Monitoring software

TECHNICAL DATA

Open Generator Set - - 1800 rpm/60 Hz/480 Volts	DM8153	
Tier 3 and Low Emissions		
Generator Set Package Performance		
Genset Power rating @ 0.8 pf	562.5 kVA	
Genset Power rating with fan	450 ekW	
Fuel Consumption		
100% load with fan	132.2 L/hr	34.9 Gal/hr
75% load with fan	106.4 L/hr	28.1 Gal/hr
50% load with fan	79.3 L/hr	20.9 Gal/hr
Cooling System[1]		
Air flow restriction (system)	0.12 kPa	0.48 in. water
Air flow (max @ rated speed for radiator arrangement)	720 m^3/min	25427 cfm
Engine Coolant capacity with radiator/exp. tank	57.8 L	15.3 gal
Engine coolant capacity	20.8 L	5.5 gal
Radiator coolant capacity	37.0 L	9.8 gal
Inlet Air		
Combustion air inlet flow rate	41.5 m^3/min	1465.6 cfm
Exhaust System		
Exhaust stack gas temperature	492.0 ° C	917.6 ° F
Exhaust gas flow rate	111.9 m^3/min	3951.7 cfm
Exhaust flange size (internal diameter)	152.4 mm	6.0 in
Exhaust system backpressure (maximum allowable)	6.8 kPa	27.3 in. water
Heat Rejection		
Heat rejection to coolant (total)	178 kW	10123 Btu/min
Heat rejection to exhaust (total)	485 kW	27582 Btu/min
Heat rejection to atmosphere from engine	103 kW	5858 Btu/min
Heat rejection to atmosphere from generator	29.2 kW	1660.6 Btu/min
Alternator[2]		
Motor starting capability @ 30% voltage dip	1089 skVA	
Frame	LC6114D	
Temperature Rise	130 ° C	234 ° F
Emissions (Nominal)[3]		
NOx g/hp-hr	3.7 g/hp-hr	
CO g/hp-hr	.26 g/hp-hr	
HC g/hp-hr	.03 g/hp-hr	
PM g/hp-hr	.025 g/hp-hr	

[1] For ambient and altitude capabilities consult your Caterpillar dealer. Air flow restriction (system) is added to existing restriction from factory.
[2] Generator temperature rise is based on a 40° C (104° F) ambient per NEMA MG1-32.
[3] Emissions data measurement procedures are consistent with those described in EPA CFR 40 Part 89, Subpart D & E and ISO8178-1 for measuring HC, CO, PM, NOx. Data shown is based on steady state operating conditions of 77°F, 28.42 in HG and number 2 diesel fuel with 35° API and LHV of 18,390 btu/lb. The nominal emissions data shown is subject to instrumentation, measurement, facility and engine to engine variations. Emissions data is based on 100% load and thus cannot be used to compare to EPA regulations which use values based on a weighted cycle.

RATING DEFINITIONS AND CONDITIONS

Meets or Exceeds International Specifications: AS1359, CSA, IEC60034-1, ISO3046, ISO8528, NEMA MG 1-22, NEMA MG 1-33, UL508A, 72/23/EEC, 98/37/EC, 2004/108/EC

Standby - Output available with varying load for the duration of the interruption of the normal source power. Average power output is 70% of the standby power rating. Typical operation is 200 hours per year, with maximum expected usage of 500 hours per year. Standby power in accordance with ISO8528. Fuel stop power in accordance with ISO3046. Standby ambients shown indicate ambient temperature at 100% load which results in a coolant top tank temperature just below the shutdown temperature.

Ratings are based on SAE J1349 standard conditions. These ratings also apply at ISO3046 standard conditions.

Fuel rates are based on fuel oil of 35° API [16° C (60° F)] gravity having an LHV of 42 780 kJ/kg (18,390 Btu/lb) when used at 29° C (85° F) and weighing 838.9 g/liter (7.001 lbs/U.S. gal.). Additional ratings may be available for specific customer requirements, contact your Caterpillar representative for details. For information regarding Low Sulfur fuel and Biodiesel capability, please consult your Caterpillar dealer.

DIMENSIONS

Package Dimensions		
Length	**3775.1 mm**	**148.63 in**
Width	**1110.0 mm**	**43.7 in**
Height	**2091.0 mm**	**82.32 in**
Weight	**3753 kg**	**8,274 lb**

NOTE: For reference only - do not use for installation design. Please contact your local dealer for exact weight and dimensions. (General Dimension Drawing #2781050).

Performance No.: DM8153

Feature Code: C15DE6Z

Gen. Arr. Number: 2351207

Source: U.S. Sourced

May 04 2009 14167261

www.CAT-ElectricPower.com

© 2009 Caterpillar
All rights reserved.

Materials and specifications are subject to change without notice. The International System of Units (SI) is used in this publication.

CAT, CATERPILLAR, SAFETY.CAT.COM their respective logos, "Caterpillar Yellow," and the POWER EDGE trade dress, as well as corporate and product identity used herein, are trademarks of Caterpillar and may not be used without permission.

REVISIONS			
REV.	DESCRIPTIONS	BY	APPVD.

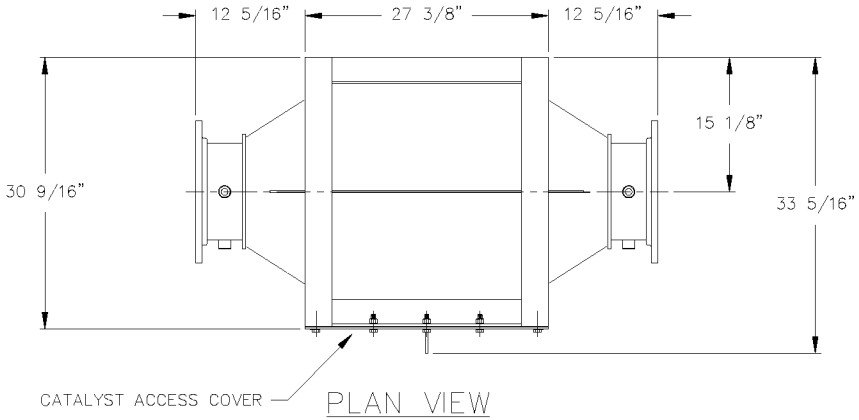

PLAN VIEW

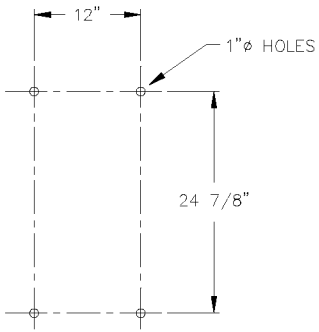

BASE BOLT PATTERN
(IN SUPPORT STEEL)

NOTES:

1. MATERIAL: U.N.O. 304 S.S. PREFERRED AS LISTED
   PLATE: ST. STL. 304 PER ASTM A240 GR 304
   ANGLES: ST. STL. 304 PER ASTM A276
   TUBING (SQUARE): ST. STL. 304
   FITTINGS: ST. STL. 304 PER ASTM A403 GR WP 304
   BOLTS: ST. STL. 304 PER ASTM A193 GR B8
   NUTS: CAR. STL. PER ASTM A194 GR 2H
   FLANGE: ST. STL. PER ASTM A105
   GASKET: VERMICULITE COATED FIBERGLASS TAPE.

2. APPROX. WEIGHT:
   EMPTY: 625 LBS.
   W/ONE LAYER CATALYST: 745 LBS.
   W/TWO LAYERS CATALYST: 865 LBS.

3. (NF) INDICATES NOT FURNISHED BY JOHNSON MATTHEY.

4. DESIGN TEMPERATURE: 1250°F MAX.
   DESIGN PRESSURE 14" W.C.

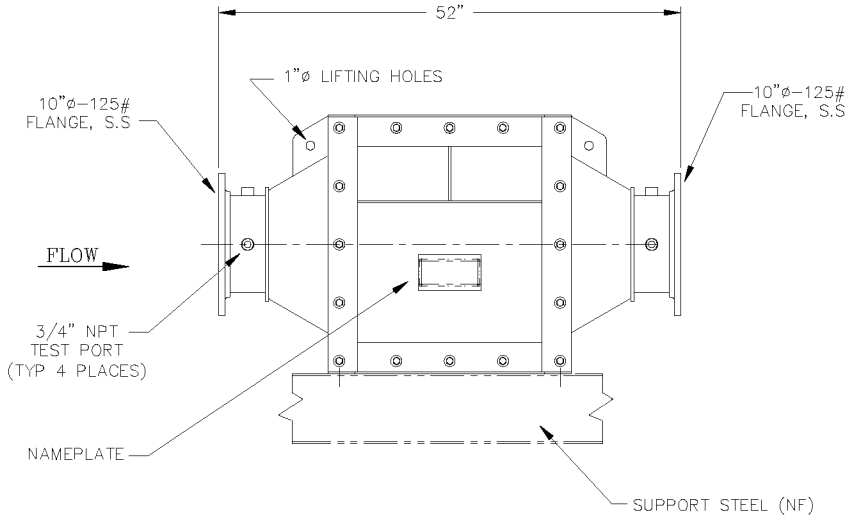

ELEVATION VIEW

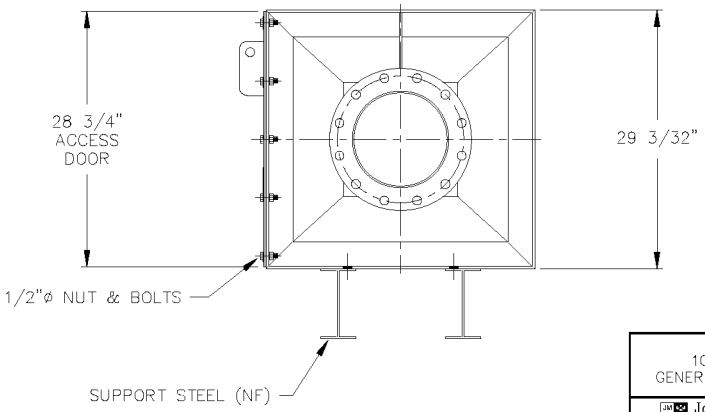

SIDE VIEW

DUALOX
1010SS-10-4
GENERAL ARRANGMENT

Johnson Matthey
WAYNE, PA
HDD\SSEC ENGINEERING

DESIGN		ENGR.	PRO. ENGR.	ENGR. MGR.
DRAWN MEC	CHECKED			
DATE 8/22/01	SHEET NO. 1 OF 1	DRAWING NUMBER		REV.
SCALE 1:6		SCR-D-6910		0

PROPERTY OF JOHNSON MATTHEY, INC. TO BE RETURNED UPON REQUEST AND USED ONLY IN REFERENCE TO CONTRACTS OR PROPOSALS OF THE CORPORATION. UNAUTHORIZED REPRODUCTION IS PROHIBITED

REVISIONS			
REV.	DESCRIPTIONS	BY	APPVD.

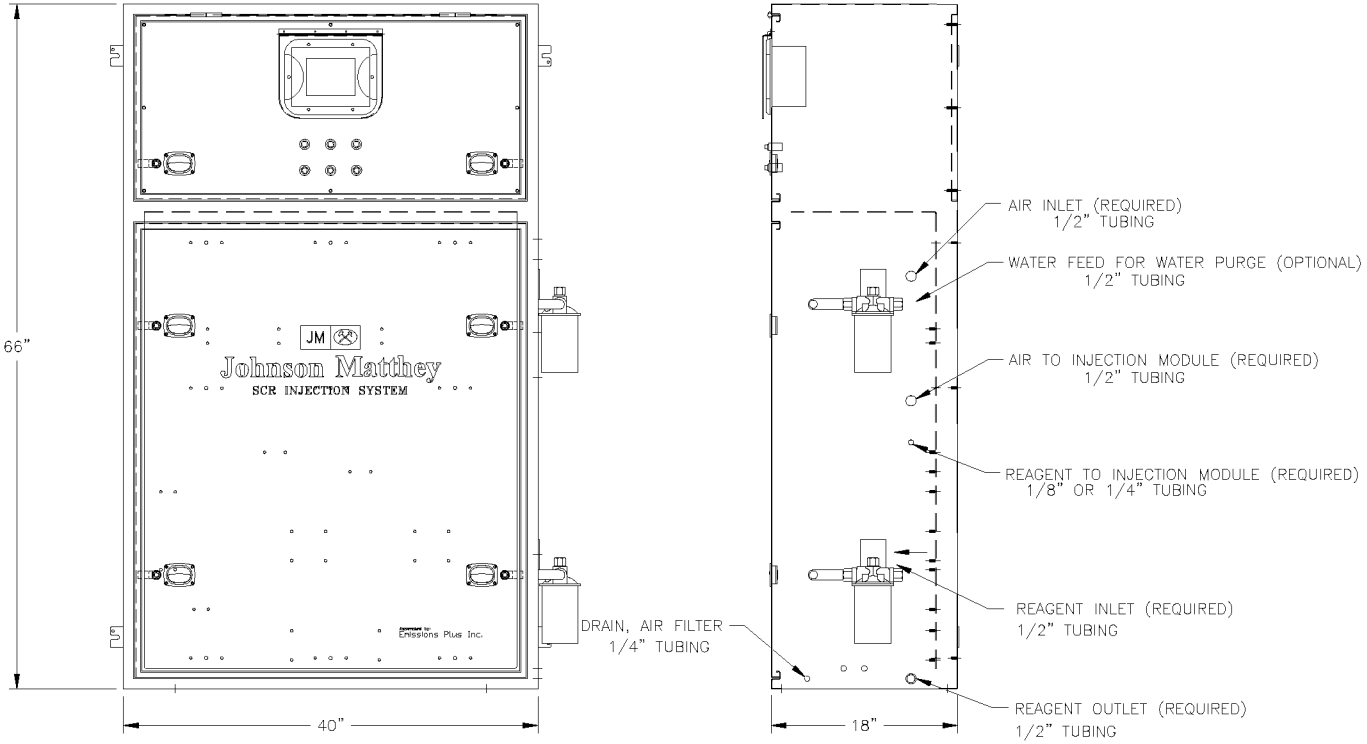

WEIGHT 600 #

DIMENSION TOLERANCES (UNLESS OTHERWISE SPECIFIED)		
	IN	[mm]
X	± 0.005 IN/IN	[±0.005 mm/mm]
X.X	± 0.03	[1]
X.XX	± 0.015	[0.4]
X.XXX	± 0.005	[0.1]
FRACTION	± 1/32" PER 15 IN	
ANGLE	± 2°	
REMOVE ALL SHARP EDGES AND BURRS		

SCR
INJECTION SYSTEM

STANDARD ENCLOSURE

JM Johnson Matthey
WAYNE, PA
HDD\SSEC ENGINEERING

DESIGN		ENGR.	PRO. ENGR.	ENGR. MGR.
DRAWN SAB	CHECKED			
DATE: 10-2-03	SHEET NO. 1 OF 1	DRAWING NUMBER		REV.
SCALE 1/8		SCR-C-7950		0

PROPERTY OF JOHNSON MATTHEY, INC. TO BE RETURNED UPON REQUEST AND USED ONLY IN REFERENCE TO CONTRACTS OR PROPOSALS OF THIS CORPORATION. UNAUTHORIZED REPRODUCTION IS PROHIBITED.

Discussion of Limiting the Stack Testing Requirements for the Discoverer Small Engines

Shell has asked for the elimination of stack testing requirements for the small engines on the Discoverer and EPA concurrence that the emission factors provided in the August 2009 proposed permit Statement of Basis (SOB) can properly be assumed to represent the maximum emission rates. All of these engines have power ratings under 550 hp and are small enough (without associated apparatus) that they could fit the back of a pickup truck. Shell believes that stack testing of these small engines is unnecessary because 1) the SOB factors are conservative, 2) the impacts of these engines are small, 3) the MLC compressors will be new and will already have been certified to meet Tier 3 standards when leaving the factory, and 4) the stack tests will be difficult to perform as required in the permit for various technical and safety reasons.

If stack testing of these small engines is deemed essential by EPA in spite of the arguments presented for them being unnecessary, a discussion is provided regarding proposed decrease in number of tests.

These small engines consist of the following:

Device type	**Per-Engine Rating**	**$PM_{2.5}$ Contribution to Maximum conc.***
MLC air compressors	540 hp	4%
HPUs	250 hp	Up to 23%
Cranes	365 hp	4%
Cementing	335 / 147 hp	13% (combined with logging)
Logging	128 hp / 36 kW	

Conservative emission factors used in August 2009 permit Statement of Basis
During the permitting process, EPA has chosen high emission factors for each engine type in order to ensure that impact standards would be met. These factors are higher than the averages for these engines, and when there are multiple engines making up a source, such as with the Discoverer, some engines will have emissions higher than the average and some lower than the average, but with multiple engines the probability is high that the over-all emissions will be very close to that average, which will be below the conservative emission factors of the SOB.

Impact from these engines is small
From the table above, the MLC compressors and cranes contribute extremely small impacts to the total impact and the HPUs, cementing, and logging engines have minor contributions. For a source contributing up to about 25% to the total project impact (such as the HPUs), any source-specific stack test hypothetically showing a difference of 12 percent from the average emission would exert up to only a 3% effect (25% of 12%) on the project impact. So differences from the average emission factor have extremely small effects on the overall emissions.

Shell also requests that EPA consider the value of the stack test information on a pollutant by pollutant basis, in many cases, there does not appear to be any value to collection of VOC, PM_{10}, and CO information, as there is no impact concern with these pollutants. Furthermore, NO_x impacts are not near any standards, and NO_x information is not necessary.

The MLC air Compressors and the will be new and meet Tier 3 emission limits
The MLC compressors will be new and will have been certified as meeting Tier 3 limits. Without significant use since leaving the factory, there is no reason to expect emissions to have changed. These engines should continue to meet the Tier 3 standards.

Stack tests would be difficult for these small engines
During drilling operations personnel and materials are in more or less constant motion on the Discoverer deck and attention is focused on drilling operations. Any stack testing activity would conflict with available deck space and could interfere with safe operations. So stack testing could not be performed during drilling activities when there would be the actual loading equipment (spools, hydraulic pumps, submerged drill motors, etc.) connected to the engines. Any stack testing must be performed prior to the drilling activities, and must be performed using artificial loads.

It is the nature of the cranes that they operate only intermittently as they lift loads. Typical operation time with significant loading on the engine would be for less than a minute. There is no easily attachable artificial load to allow testing for periods longer than that and testing requires steady loading for at least an hour per test. Hypothetically the spooling equipment (the load) could be detached and an electric generator attached, and the generator could be attached to a heater load bank. However, this would require new mounting frames to be fabricated for the generators, the units would need to be partially disassembled, and generators fit into place for the test. The crane engines are mounted on pedestals above the deck, and any load equipment substitution would involve a major construction project. Aside from such an effort, these cannot be tested at the required steady-state engine conditions. During any hypothetical testing, each crane would be out of commission and the cranes are required for general services on the Discoverer. Lack of crane service would curtail other concurrent activities on the deck so the ship would be dedicated nearly exclusively to crane stack testing. The effort to perform the stack tests on the cranes listed in the August 2009 proposed permit would be large, expensive, and consume perhaps several weeks in the execution.

As discussed in Shell's November 23, 2009 submission and repeated above, Shell believes that testing emissions from the other small engines is also unnecessary. However, artificial loads could be fabricated / plumbed onto logging winches, cementing units, MLC compressors, and HPU units to allow for steady-state loaded engine operation prior to drilling activities. For example, for the cementing units, water can be substituted for cement to be pumped and water hose with an artificial restriction could be fitted to the engines so that the engines could be run for at least an hour at a relatively steady load. These load substitutions can be devised and attached to the engines. All substitutions

will require engineering efforts of varying degrees of difficulty, all can be performed, and some imprecision would be inherent.

However, setting these simulated loads to the three different specified load points (generally 50%, 75%, and 100%) is expected to be problematic. Shell requests that the tests, if they are to be required, be performed at one load, representing the most frequent load anticipated for each engine. Shell anticipates these typical and most frequent loads to be as listed in the table below.

Device type	**Per-Engine Rating**	**Anticipated Most-Frequent Operating Range**
MLC air compressors	540 hp	50% - 70%
MLC HPUs	250 hp	50% - 70%
Cranes	365 hp	60% - 90%
Cementing	335 / 147 hp	60% - 80%
Logging	128 hp / 36 kW	40% - 60%

Shell would adjust the load to be within the range provided here and hold that load for the test. All of these are within the 50% to 100% range specified in the proposed permit (except logging which is more reflective of actual operations) . Tests performed with simulated loads within these ranges would provide EPA with documentation of the emissions in the engine load range expected to be experienced most frequently during drilling.

Shell Gulf of Mexico Inc.
3601 C Street, Suite 1000
Anchorage, AK 99503

Mr. Rick Albright
Director, Air Quality Sector
Environmental Protection Agency Region 10
1200 6th Ave. Ste. 900, AWT-107
Seattle, WA 98101

December 9, 2009

Re: Shell Gulf of Mexico Inc. Supplement to Application for Discoverer/Chukchi OCS/PSD Permit

Dear Mr. Albright,

Shell Gulf of Mexico Inc. (Shell) provides the enclosed supplemental technical information on the above-referenced permit application. This submittal provides formal commitments by Shell to certain modes of operation while a stationary source and references material to further support earlier application statements.

Tanker position while drilling. Page 18 &19, Section 2.13, of the February 23, 2009 Chukchi Sea application states that a tanker may occasionally enter the 25-mile radius of the Discoverer while a stationary source. This application supplement corrects this statement to make it clear that, contrary to the February 23 statement, no tanker will enter the area defined by a 25-mile radius of the Discoverer when it is a stationary source.

Use of ULSD. Shell hereby commits to using only ultra-low-sulfur diesel (15 ppm) in any engine on the Discoverer (including its propulsion engines) and in any engine on any vessel in the associated fleet when operating North of the Bering Strait. Accordingly, the evaluation of sulfuric acid mist emissions in Attachment A assumes use of ULSD. Although Shell is not revising the existing emissions inventory for SO_2, the result is that the evaluation of SO_2 impacts in the application is even more conservative than it already was.

Clarification of previous submissions regarding when the Discoverer becomes an "OCS Source." First, Shell is clarifying that it is asking that the re-proposed permit employ a definition that is consistent with the analysis in Attachment A to Shell's October 20, 2009 letter to EPA regarding Supplemental Comments on the August 2009 Proposed Chukchi PSD Permit. That letter referred to a "potential basis" for revising the definition, due to concerns about permit changes resulting in re-proposal. Now that the permit is being re-proposed, this supplement clarifies that Shell is affirmatively asking that the change be made.

Second, this supplement corrects a statement made in Shell Gulf of Mexico's February 25, 2009 revised application. The second paragraph on page 25 of the Regulatory Applicability section of that document states:

> "For purposes of this permitting, the source, its emissions, and its emission controls and operational restrictions are described only for the drilling activity, which is defined as the time from placement of the first of eight anchors to removal of or detachment from the last anchor. The Discoverer's emissions are not regulated (or defined) while not attached to the seabed."

This supplement withdraws the statement that the source be defined based on placement of the first of eight anchors. Consistent with Attachment A of Shell's October 20, 2009 submittal, Shell believes it is clear that having only one anchor down does not make a vessel "erected" on the seabed for the purpose of exploration, and therefore cannot be the basis for determining when the Discoverer becomes an OCS Source.

The supporting reference materials are comprised of:

Attachment A	Evaluation of Sulfuric Acid Mist Emissions
Attachment B	Supplemental BACT Information – Diesel Engines
Attachment C	Supplemental BACT Information – Use of Alternative Drill Vessel
Attachment D	Baseline $PM_{2.5}$ Concentrations Representative of the Chukchi Sea and the Use of Wainwright Data

We remain available to EPA to discuss or expand on any of this information.

Sincerely,

Susan Childs
Regulatory Affairs Manager, Alaska Venture

Enclosure

cc: *Lance Tolson – Shell*
Keith Craik – Shell
Nicole St Amand – Shell
Rick Fox – Shell
Mark Schindler – Octane LLC.
Rodger Steen – Air Sciences Inc.
Eric Hansen – Environ International
Jeffrey Walker - Minerals Management Service – Alaska Region

ATTACHMENT A

Evaluation of Sulfuric Acid Mist Emissions

Evaluation of Sulfuric Acid Mist Emissions

In the permit applications for both the Chukchi and Beaufort Sea exploration drilling programs, Shell characterized potential sulfuric acid mist emissions from the project as negligible. Shell has recently confirmed that it will use only ultra-low sulfur diesel (ULSD) fuel in all engines within the theater. This means that all engines will combust only ULSD (having a maximum fuel sulfur content of 15 parts per million by weight) when within a 25-mile radius of the proposed drilling location.

Like sulfur dioxide (SO_2), sulfuric acid mist (H_2SO_4) results from oxidation of sulfur in the fuel. Most of the sulfur in the fuel will be oxidized to SO_2, but a smaller percentage will be oxidized to sulfuric acid. That fraction can vary, depending on the sulfur content of the fuel and the engine load.

An upper bound estimate on the emissions of sulfuric acid mist can be calculated based on the quantity of fuel to be burned and the fuel sulfur content. Figure A-1 identifies the fraction of sulfur in the fuel that is oxidized to SO_3 as a function of fuel sulfur content and engine load.

Figure A-1: Fraction of Sulfur in Fuel Oxidized to SO_3

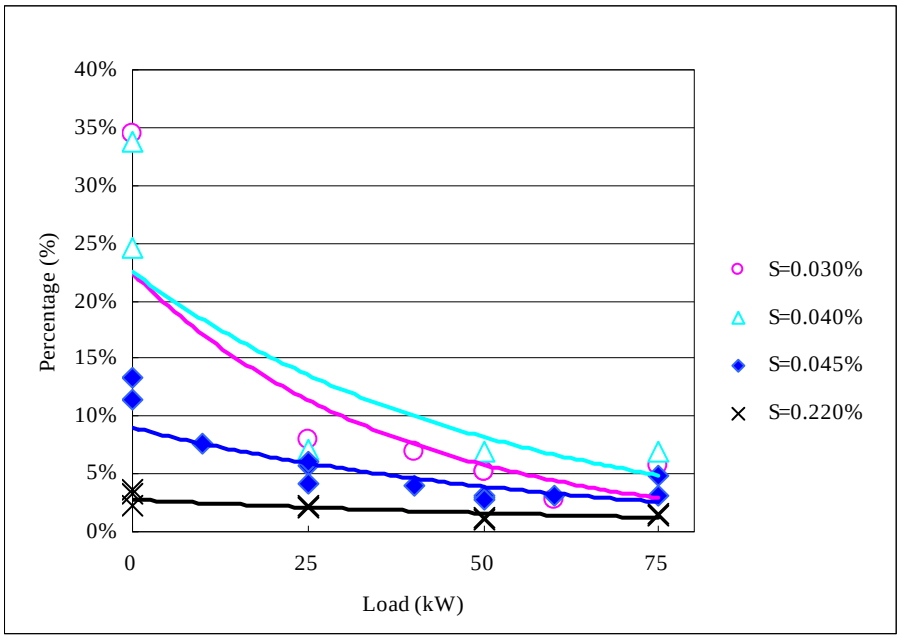

Source: Ziefei Liu, Mingming Lu, Tim C. Keener, Soon-Jai Khang and Fuyan Liang; "The sulfur speciation of diesel emissions from a non-road generator." Department of Civil and Environmental engineering, University of Cincinnati, Cincinnati, OH 45221. Figure 5 from http://files.abstractsonline.com/CTRL/D2/A/76E/7D2/178/468/78A/319/D7A/4B8/81D/05/a1178_1.doc

Because the engines will typically be operated at high loads, ENVIRON believes it appropriate to apply a five percent conversion rate to estimate sulfuric acid mist from most of the engines.

However, the larger engines powering the generators on the *Discoverer* are equipped with oxidation catalysts. There is evidence that the oxidation catalysts increase the sulfate formation. ENVIRON was unable to determine a reliable percentage for these engines from available literature. Consequently, we conservatively assumed 100 percent conversion of S in the fuel to H_2SO_4 for the six generator engines (Caterpillar D399s).

In Table A-1, we assume 100 percent of the sulfur in the fuel is oxidized to SO_2 when we calculate annual SO_2 emissions. For the purposes of evaluating the potential emissions of sulfuric acid mist, we conservatively assume all the fuel combusted by the six large generators is also oxidized to sulfuric acid mist and five percent of all the sulfur in the fuel combusted by other engines is oxidized to sulfuric acid mist. Obviously, we are double counting emissions of oxidized sulfur compounds, but the purpose of this exercise is to confirm that annual potential SO_2 and sulfuric acid mist emissions are less than the respective 40 and 7 tons per year Significant Emission Rates under the PSD permit program. Review of Table A-1 confirms that emissions of both SO_2 and acid mist are below the Significant Emission Rates, and these pollutants are not subject to PSD review.

Table A-1: Summary of SO_2 and Acid Mist Emissions

Source		Engine Model	HP	gallons/yr	MMBtu/yr	Annual emissions (tons) SO2	Conversion	H2SO4
FD-1	Generator Engine	Cat / D399	1,325	209,454	27,878	0.0222	100%	0.034
FD-2	Generator Engine	Cat / D399	1,325	209,454	27,878	0.0222	100%	0.034
FD-3	Generator Engine	Cat / D399	1,325	209,454	27,878	0.0222	100%	0.034
FD-4	Generator Engine	Cat / D399	1,325	209,454	27,878	0.0222	100%	0.034
FD-5	Generator Engine	Cat / D399	1,325	209,454	27,878	0.0222	100%	0.034
FD-6	Generator Engine	Cat / D399	1,325	209,454	27,878	0.0222	100%	0.034
FD-7	Propulsion Engine	MI / 6UEC65	7,200	0	0	0.0000	5%	0.000
FD-8	Em Generator	Caterpillar / 3304	131	331	44	0.0000	5%	0.000
FD-9	MLC Compressor	Caterpillar / C-15	540	40,672	5,413	0.0043	5%	0.000
FD-10	MLC Compressor	Caterpillar / C-15	540	40,672	5,413	0.0043	5%	0.000
FD-11	MLC Compressor	Caterpillar / C-15	540	0	0	0.0000	5%	0.000
FD-12	HPU Engine	Detroit/8V71	250	22,169	2,951	0.0024	5%	0.000
FD-13	HPU Engine	Detroit/8V71	250	22,169	2,951	0.0024	5%	0.000
FD-14	Port Deck Crane	Cat / D343	365	31,411	4,181	0.0033	5%	0.000
FD-15	Starbd Deck Crane	Cat / D343	365	31,411	4,181	0.0033	5%	0.000
FD-16	Cementing Unit	Detroit / 8V-71N	335	22,022	2,931	0.0023	5%	0.000
FD-17	Cementing Unit	Detroit / 8V-71N	335	22,022	2,931	0.0023	5%	0.000
FD-18	Cementing Unit	GM 3-71	147	9,663	1,286	0.0010	5%	0.000
FD-19	Logging Winch	Detroit / 4-71N	128	0	0	0.0000	5%	0.000
FD-20	Logging Winch	John Deere/4024TF270	36	0	0	0.0000	5%	0.000
FD-21	Heat Boiler	Clayton 200 Boiler	7.97	241,435	32,135	0.0256	5%	0.002
FD-22	Heat Boiler	Clayton 200 Boiler	7.97	241,435	32,135	0.0256	5%	0.002
FD-23	Incinerator	TeamTec/GS500C	300 lb/day		50400 lb/yr	0.0315	5%	0.002
FD-31	Resupply Ship - docked			1,474	196	0.0002	5%	0.000
Ice Breaker						0.2422		
	IB ICE Engines			5,714,474	760,596	0.6593	5%	0.050
	IB Incinerators	154 lb/hr	620928 lb/yr			0.3881	5%	0.030
	Total Ice Breaker					1.0474		
Anchor Handler								
	AH ICE Engines			5,457,617	726,409	0.6296	5%	0.048
	AH Boiler			121,172	16,128	0.0140	5%	0.001
	AH Incinerator	151.23 lb/hr	609771 lb/yr			0.3811	5%	0.029
	Total Anchor Handler					1.0247		
	Total Ice Management Fleet					2.0721		
Resupply Ship - in Transit				10,677	1,421	0.0012	5%	0.000
OSR Fleet								
	OSR Main Ship ICE Propulsion Engines			503,992	67,081	0.0535	5%	0.004
	OSR Main Ship ICE Generators			134,398	17,888	0.0143	5%	0.001
	OSR Main Ship Incinerator	125 lb/hr	504000 lb/yr			0.3150	5%	0.024
	OSR Main Ship Total					0.3828		
	OSR Work Boat ICE Propulsion Engines							
	OSR Work Boat ICE Generators							
	OSR Work Boats Total			389,326	51,819	0.0413	5%	0.003
	Total OSR Fleet					0.4241		
	Total Fleet			14,315,270		2.4974		
					Total All	2.7396		0.404

ATTACHMENT B

Supplemental BACT Information – Diesel Engines

Diesel Engine Best Available Control Technology Analysis

Frontier Discoverer Drill Ship

Prepared for:

Shell Offshore, Inc.

Prepared by:

ENVIRON International Corp.
19020 33rd Ave W, Suite 310
Lynnwood, Washington 98036

December 2009

Project No. 0322090A

ENVIRON

TABLE OF CONTENTS

Page

1.0 INTRODUCTION 1

2.0 MAIN ENGINE ISSUES 1
- 2.1 ENGINE REPLACEMENT 2
- 2.2 NOX EMISSIONS 2
- 2.3 CDPF FILTERS 3

3.0 SMALL DIESEL ENGINE REVIEW 3

4.0 SMALL DIESEL ENGINE AND DIESEL COMPRESSOR BACT ANALYSIS 11
- 4.1 NOX BACT ANALYSIS 11
  - 4.1.1 Identification of Possible Control Alternatives 12
    - 4.1.1.1 Cam Shaft Cylinder Reengineering Kit 12
    - 4.1.1.2 Exhaust Gas Recirculation (EGR) 12
    - 4.1.1.3 Ignition Timing Retard (ITR) 12
    - 4.1.1.4 Engine Replacement 13
    - 4.1.1.5 Selective Catalytic Reduction (SCR) 13
    - 4.1.1.6 NOx Adsorber 14
    - 4.1.1.7 Lean NOx Catalyst (LNC) or Hydrocarbon-SCR (HC SCR) 14
    - 4.1.1.8 Summary of Potential Control Alternatives 14
  - 4.1.2 Technical Feasibility of Control Alternatives 15
    - 4.1.2.1 Cam Shaft Cylinder Reengineering Kit 15
    - 4.1.2.2 Exhaust Gas Recirculation (EGR) 16
    - 4.1.2.3 Ignition Timing Retard (ITR) 16
    - 4.1.2.4 Engine Replacement 17
    - 4.1.2.5 Selective Catalytic Reduction (SCR) 17
    - 4.1.2.6 NOx Adsorber 19
    - 4.1.2.7 Lean NOx Catalysts (LNC) or Hydrocarbon-SCR (HC SCR) 19
    - 4.1.2.8 Summary of Alternatives Determined to be Technically Feasible 20
  - 4.1.3 Effectiveness of Remaining Alternatives 20
    - 4.1.3.1 Cam Shaft Cylinder Reengineering Kit 20
    - 4.1.3.2 Engine Replacement 21
    - 4.1.3.3 Ranking of Remaining Alternatives by Effectiveness 21
  - 4.1.4 Cost-Effectiveness Analysis 21
    - 4.1.4.1 Cam Shaft Cylinder Reengineering Kit 21
    - 4.1.4.2 Engine Replacement 22
    - 4.1.4.3 Selective Catalytic Reduction (SCR) 23
  - 4.1.5 Energy and Environmental Considerations 24
    - 4.1.5.1 Cam Shaft Cylinder Reengineering Kit 24
    - 4.1.5.2 Exhaust Gas Recirculation (EGR) 24
    - 4.1.5.3 Ignition Timing Retard (ITR) 24
  - 4.1.6 Selection of BACT for NO_X Emissions From Small Diesel Engines 25
- 4.2 EXHAUST PARTICULATE MATTER BACT ANALYSIS 25

4.2.1 Identification of Possible Control Alternatives 26
4.2.1.1 Good Combustion Practices, Low Sulfur Fuel (LSF), and Crankcase Ventilation Controls.....26
4.2.1.2 Engine Replacement.....27
4.2.1.3 Oxidation Catalyst (OxyCat).....27
4.2.1.4 Diesel Particulate Filter (DPF) 27
4.2.1.5 Catalytic Diesel Particulate Filter (CDPF) 27
4.2.2 Technical Feasibility of Control Alternatives 28
4.2.2.1 Engine Replacement.....28
4.2.2.2 Oxidation Catalyst (OxyCat).....28
4.2.2.3 Diesel Particulate Filter (DPF) 28
4.2.2.4 Catalytic Diesel Particulate Filter (CDPF) 29
4.2.3 Effectiveness of Remaining Alternatives 29
4.2.3.1 Engine Replacement.....29
4.2.3.2 Oxidation Catalyst (OxyCat).....29
4.2.3.3 Diesel Particulate Filter (DPF) 29
4.2.3.4 Catalytic Diesel Particulate Filter (CDPF) 30
4.2.3.5 Ranking of Remaining Alternatives by Effectiveness.....30
4.2.4 Cost-Effectiveness Analysis.....30
4.2.4.1 Engine Replacement.....30
4.2.4.2 Catalytic Diesel Particulate Filter (CDPF) 31
4.2.4.3 Oxidation Catalyst (OxyCat).....31
4.2.4.4 Diesel Particulate Filter (DPF) 32
4.2.5 Selection of BACT for PM Emissions From Small Diesel Engines 32

Appendix – Cost Effectiveness Calculations and Communications Records

DIESEL ENGINE BACT ANALYSIS

Shell Offshore Inc.
Frontier Discoverer Drill Ship

1.0 INTRODUCTION

Shell Offshore Inc. (Shell) has applied to EPA Region 10 for preconstruction permits to operate the Frontier Discoverer drill ship and its associated fleet for exploratory drilling in the Chukchi and Beaufort Seas. Based on calculated potential annual emission rates, the proposed source is classified as a major stationary source, and is therefore subject to the EPA's new source review (NSR) permitting rules codified in 40 CFR 52.21. Among the required elements of a permit application submitted under NSR is the requirement to conduct a best available control technology (BACT) analysis for any criteria pollutant that the source would emit in "significant" quantities, as defined in 40 CFR 52.21(b)(23)(i).

This document is intended to supplement the BACT analysis in these revised Chukchi Sea permit application submitted in February 2009. This document focuses on providing additional BACT detail for diesel engines. The primary focus here is on NOx emissions, and to a lesser extent particulate matter emissions, because public comments criticized the BACT analysis for these pollutants.

ENVIRON reviewed the engines proposed for use on the drill ship and, based on that review, investigated control technologies to determine which would constitute BACT for each engine. The sections that follow discuss the control technologies available and, ultimately, the selection of BACT for each emission unit .

2.0 MAIN ENGINE ISSUES

BACT for the main generator engines was addressed in the February permit application. This supplement addresses three issues for the main generator engines:

- Replacement of the main engines with newer engines,
- Use of an emission factor for NOx of 0.5 grams per kilowatt hour (g/kW-hr) when manufacturer information indicated the engines might perform at a lower emission level, and

- Use of a Catalytic Diesel Particulate Filter (CDPF) instead of a oxidation catalyst (OxyCat) as a means of particulate control.

2.1 ENGINE REPLACEMENT

The permit applications calculate engine NOx emissions using an emission factor of 0.5 g/kW-hr; annual emissions are 1.56 tons per engine or a total of 9.36 t/y for all 6 engines. Replacement with a new engine of similar size would require the engine to meet the Tier 3 emission standard for marine engines of 5.8 g/kW-hr or 4.33 grams per horse-power hour (g/hp-hr). Assuming SCR would result in 95% control (AP-42 top performance) the new engine would emit NOx at the rate of 0.22 g/kW-hr, with a net NOx savings of 56%. Emissions from each engine would be lowered by 0.87 tons or 5.24 tons for all 6 engines.

The capital cost for each engine replacement is estimated by Shell at $365,000 for an annualized cost rate of $45,001. The cost/benefit ratio is then $51,508 per ton of NOx removed. This cost is considered too high to be judged BACT and therefore, engine replacement is not considered an acceptable BACT control.

A similar calculation can be made for particulate matter, but the cost per ton for engine replacement is even higher because particulate matter mass emissions are much lower,. For example, even if the new engine had no particulate matter emissions, the reduction would be only 0.4 t/y per engine and with the annual cost of $45,001 to replace the engine, cost/benefit calculations show over $110,000 per ton of particulate matter removed.

2.2 NOX EMISSIONS

EPA's draft permit limits NOx emissions from the six generator engines to 0.5 g/kW-hr. This is an extremely low NOx emission factor. For example, the 3 most recent permits issued by the Alaska DEC for diesel engine generators used the following emission factors:

- Nixon Fork Mine, Issued 8/13/2009 included a permit for an engine generator operating at 11.1 g/kW-hr

- The Naknek Power Plant, Issued 3/31/2009 included a permit for an engine generator with an emission rate of 26.0 g/kW-hr

- The Liberty Offshore Oil Project (BP), Issued 12/19/2008 included a permit for an engine generator with an emission rate of 6.3 g/kW-hr.

The recent Tier 4 emission limits for marine engines that will not take effect until 2014 will only require that engines meet an emission rate of 1.8 g/kW-hr. EPA's emission factor reference document indicates uncontrolled diesel engines have an emission rate of 14.6 g/kW-hr and that SCR technology can control 80% to 95% of the emissions of NOx. Even at 95% control, the emission factor for NOx would be 0.729 g/kW-hr. Thus the quoted emission factor for the current project reflects a 97% control over the current AP-42 emission factor.

Despite this advanced performance, the manufacturer has indicated that under ideal conditions, including steady loads and mild ambient temperatures, the engines may actually perform at an emission rate as low as 0.1 g/kW-hr. However, they were only willing to guarantee emissions of 0.5 g/kW-hr. Shell believes that EPA has appropriately selected the level of 0.5 g/kW-hr as BACT for the engines. While lower levels might be attained under some conditions, such low levels cannot be continuously attained and do not reflect BACT.

2.3 CDPF FILTERS

The current application concludes that OxyCat is the appropriate particulate matter (PM) BACT for the engine generator sets. It has been suggested that lower PM emissions could be attained if CDPF were to be used on the main engines as an alternative to OxyCat. The use of CDPF on these engines is not feasible because these filters add back pressure on the engines which will cause the SCR system to fail.

Furthermore, the potential reduction in emissions is very small because emissions of particulate matter are very small with the OxyCat control. Each engine emits only 0.4 tons per year of PM. The use of CDPF as an alternative to OxyCat, if it were feasible, would reduce PM emissions by only 0.28 t/y. The emission rate with OxyCat meets the Tier 4 emission standards for marine engines that will not take effect until 2014 of 0.25 g/kW-hr. As shown in the BACT analysis for the original application, the cost benefit for CDPF would be between $22,000 to $27,000 per ton of PM removed. This cost is considered too high to be judged BACT by Shell and therefore, engine replacement is not considered an acceptable BACT control.

3.0 SMALL DIESEL ENGINE REVIEW

The small diesel engines associated with the proposed source can be divided into five categories:

- Air compressors and hydraulic power units,
- Cranes,

- Cementing Units,,
- Logging Units, and
- Diesel Generators on the Supply Ship

This section will provide information and operational details for each group of engines.

MLC Air Compressors and HPU(FD-9, 10, 11, 12, and 13)

The Mud Line Cellar (MLC) air compressors (FD-9, 10, and 11) and hydraulic power units (HPUs) (FD-12 and 13) are used for drilling MLCs, which is the initial phase of drilling activity, lasting about six days. These engines would be operated at between 50 and 100 percent of maximum capacity to evacuate the MLC. Shell requests an Owner Requested Restriction (ORR) of 63 days per season of capacity operation for each of these two engine groups. The MLC air compressors will be new Tier 3 engines with no add-on emission controls, while the HPUs are existing engines with catalytic diesel particulate filters (CDPF) for control of oxidizable emissions (i.e., VOCs, CO, and soluble PM) and solid PM.

Table 3-1 identifies the MLC air compressor engine size, make and model numbers. As stated above, these engines will be new engines designed to meet new Tier 3 engine regulations, the most stringent emissions standards for commercially available engines of this size.

Table 3-1. MLC Air Compressor Tier 3 Engines

Unit	Manufacturer	Model No	Size (hp)	Load %	Operating factor (days per year)
FD-9	Caterpillar	C-15	540	50 to 100	63
FD-10	Caterpillar	C-15	540	50 to 100	63
FD-11	Caterpillar	C-15	540	50 to 100	63

Table 3-2 identifies the HPU engine sizes, make and model numbers. As stated above, the HPUs are existing engines with catalytic diesel particulate filters (CDPF) for control of VOCs, CO and PM. The engines were built in 1978 and 1979.

Table 3-2. Hydraulic Power Units

Unit	Manufacturer	Model No	Size (hp)	Load %	Operating factor (days per year)
FD-12	Detroit	8V71	250	50 to 100	63
FD-13	Detroit	8V71	250	50 to 100	63

The MLC equipment is temporary equipment that is loaded onto the drill ship for the MLC drilling operation that occurs at the beginning of the well drilling program. The two hydraulic power units (HPUs) and the three air compressor units (ACUs) are each powered by diesel engines. These units have been designed to be portable so they can be removed from the drill ship at any time, should the deck space be required for other equipment or materials associated with the well. However, operationally, the preference is to have these units available on board the drill ship to minimize time required to set up the units for a second MLC operation if so required, as well as to reduce the potential of damage or corrosion that might occur if they are stored on the deck of an anchor handling supply vessel. Figure X-1 below shows the location and size of the Air Compressor units. The air compressors are quite large (20 ft x 7.3 ft w x 8 ft h each), and as a result there is a limited number of locations that will allow easy access for operations and maintenance. The area chosen was the port forward casing racks near the drill floor, as shown by the pictures in Figure 3-1.

Figure 3-1. Air Compressor Units for MLC

Operationally, the HPUs need to be located as close to well center as possible to reduce the length of the umbilical hose that is required to supply the power fluid to the MLC bit. In 2007, the location that was seen to be best to store and operate the HPUs was the top of the BOP 'garage' (See Figure 3-2). Although limited on space to layout the HPUs (Figure 3-3) and the hose reel (Figure 3-4), the proximity to and straight line access to the drill floor was an advantage. Figure 3-2 shows the location relative to the drill floor and Figure 3-3 shows one of the units in place. Each HPU is approximately 12 ft x 7 ft w x 8 ft h.

Figure 3-2. Location for the HPUs

Figure 3-3. Hydraulic Power Unit No.2

Figure 3-4. HPU Hose Reel

Figure 3-5 Port and Starboard Deck Cranes

Cranes (FD-14 and 15)

The Discoverer has two cranes (see Figure 3-5) mounted on pedestals that are used intermittently to move materials around the deck and to on-load supplies from the re-supply ship. The engine operating rates are highly variable, and depend on the load being moved.

Shell proposes an ORR for the combined operation of the cranes equivalent to 63 days per season of capacity operation, to be demonstrated through tracking of fuel consumption. The crane engines have CDPFs for control of soluble organic fraction and solid particulate matter, carbon monoxide, and volatile organics. The crane engines were built in 1974. A summary of the crane engines are shown in Table 3-3.

Table 3-3. Crane engine sizes, make and model numbers..

Unit	Manufacturer	Model No	Size (hp)	Load %	Operating factor (days per year)
FD-14	Caterpillar	D343	365	variable	63
FD-15	Caterpillar	D343	365	variable	

Cement Units (FD-16, 17, and 18)

Three cementing units are used intermittently to fix casings in the hole and seal the drill hole when drilling is interrupted or ended. The cementing units force a slurry of cement and additives down the casing and into the annular space between the casing and the wall of the borehole when the drill pipe is pulled out of the hole, or for P&A'ing wells. The cement units are also used intermittently as high pressure pumps for hydrostatically testing well equipment and drilling components, such as the wellhead connections, the blowout preventer and other connections.

Because drilling cannot take place simultaneously with cementing, the generators will be operating only at low loads when cementing occurs. This decrease in generator emissions was not taken into account in the impact analysis of the permit application. Shell requests an ORR equivalent to capacity operation for 27.8 percent of the day for the three cementing unit engines and the two logging units (discussed below) combined, to be demonstrated through tracking of fuel consumption. The cementing units are equipped with CDPFs for control of volatile organics, carbon monoxide, and organic particulate matter. Table 3-4 below identifies the cementing unit engine characteristics.

Table 3-4. Cementing Units

Unit	Manufacturer	Model No	Size (hp)	Load %	Operating factor (days per year)
FD-16	Detroit	8V-71N	365	Low	168
FD-17	Detroit	8V-71N	365	Low	168
FD-18	GM	3-71	147	Low	168

Logging Units (FD-19 and 20)

The Logging winch unit and electrical power generator are powered by diesel engines. The logging equipment is used to gather information from the well after the drill stem is removed. When the logging equipment is operated, the cementing units would be off and the drilling generators would be operating at low load. The logging units operate at variable and unpredictable loads. The logging units also have CDPFs for control of volatile organics, carbon monoxide, and organic and solid particulate matter.

The electrical generator has a Tier 2 MMG35 generator engine (35 hp), as shown in Figure 3-6. The load for the generator varies depending on the type of operation and is summarized as follows, but the generators are very lightly loaded most of the time.

- Data Acquisition systems – Steady load ~5-10KW
- Lights – Varying load 0 – 3 KW.
- Heating – Varying load 0 – 20 KW

Figure 3-6. Logging Generators

The logging winch unit (Caterpillar C7, 250 hp) meets the Tier 3 engine standard. The loads on the winch unit also vary and are summarized as follows:

- <5% during rig-up, rig-down, and when stopped in a well.
- Negative while descending into the well. While the tools are moving downward the engine is acting as a brake on the hydraulic system.
- ~5-15% of full power while logging the well dependent on tension and logging speed.
- 20-100% when retrieving the tools after logging, with the power need dependent on tension and well depth. With the power level dropping constantly as tension drops due cable retrieval. During this phase the load goes to zero every time the winch is stopped.

A logging job does not proceed smoothly through the four phases described above in a progression. During decent the winch is reversed several times to check tension, to clear obstructions, and to run repeat section. During retrieval the winch is often stopped when an obstruction is encountered or a wrap is missed.

Because the logging engines and the cementing unit engines cannot be used at the same time, Shell proposes to apply the same ORR to both the cementing and the logging units: the cementing units and logging units will operate no more than 27.8 percent of capacity in any calendar day. In other words, the daily fuel consumption restriction on the cementing units is to include use of the logging units.

A summary of the logging unit engine characteristics are shown in Table 3-5. Only one John Deere unit is required. Either unit 3248 or 3285 will be sent to the rig prior to the start of the drilling season. Both John Deere units were built in 2005 and the Caterpillar unit was built in 2008. Note that unit 1723 is listed as a Caterpillar C7 engine, which differs from the original permit application, which showed an older Detroit Diesel 8V-71N engine. Since the application was submitted, the older engine was replaced with the larger unit. These units are skid-mounted, and the older engine can be replaced on the ship if requested. However, the newer engine, although twice as large at 250 horsepower, has lower emissions than the original engine because the newer engine is a Tier 3 engine. For example, for NOx, the emissions from the older engine were calculated to be 3.31 lb/hr, while the newer 250 hp Tier 3 engine has maximum potential emissions of only 1.68 lb/hr. Actual emissions will be even lower for this engine because it will operate under the same fuel restriction in the permit for the older engine. Accordingly, in this BACT assessment, we have assumed EPA's preference will be for the newer, lower emitting engine.

Table 3-5. Logging Units (Generators and Winch Units) model year

Unit	Manufacturer	Model No	Size (hp)	Load %	Operating factor (days per year)
3248	John Deere	PE4020TF270D	35	Light and variable	168
3285	John Deere	PE4020TF270D	35	Light and variable	168
1723	Caterpillar	C7	250	Light and variable	168

Supply Ship Diesel Generators (FD-31)

When attached to the Discoverer, the engines on the supply ship become part of the stationary source and subject to BACT. Only one of two identical utility generators on board the supply ship will operate when the supply ship is attached to the Discoverer. The utility generator engines are both Caterpillar D3406 engines. Because of their infrequent connection to the Discoverer (only 96 hours per year) annual emissions from these engines is very small, so the cost of any proposed control measure is very high when compared with the potential emission reduction. No emission controls on the supply ship generator are warranted.

4.0 SMALL DIESEL ENGINE AND DIESEL COMPRESSOR BACT ANALYSIS

BACT for small diesel engines (i.e., less than 600 hp) and diesel compressors was addressed in the original permit application. However, the review was limited to the RACT/BACT/LAER Clearinghouse (RBLC) and the California Air Resources Board Statewide Best Available Control Technology Clearinghouse (CA-BACT). While these databases provide an indication of what controls may be applied in practice, this supplemental review expands and updates the control technology review to include all potential control alternatives, including cutting-edge technologies still under development. These technologies were evaluated and ranked by effectiveness, reviewed for potential application to the engines identified in the previous section, and, when necessary, whether a particular technology is cost-effective or would result in unacceptable energy or environmental impacts.

4.1 NOX BACT ANALYSIS

NO_X is generated when combustion temperatures are high enough for the nitrogen in the combustion air or bound in the fuel to combine with oxygen to form NO. Depending upon conditions, some portion of the NO will react to form NO_2.

4.1.1 Identification of Possible Control Alternatives

There are a variety of options available for controlling NO_X emissions from combustion sources. Some options involve combustion controls that reduce NO_X formation, while others utilize add-on control devices to remove NO_X after it is formed. NOx reduction approaches that do not involve the application of a control technology were also considered.

4.1.1.1 Cam Shaft Cylinder Reengineering Kit

The Clean Cam Technology Systems (CCTS) technology consists of engine-specific retrofit components, including a proprietary cam shaft. It reduces NOx emissions by increasing the volume of residual exhaust gas that remains in the combustion chamber after the power stroke. These residual exhaust gases absorb heat and reduce the peak combustion temperature, which results in lower NOx emissions. The heat absorption by the residual exhaust gases occurs within the camshaft to reduce NOx and does not lower the exhaust temperature. The injection timing can be advanced on some engines to maximize PM emission reductions, or it can be varied to achieve the desired balance of NOx versus PM reductions. The technology has been certified through the California Air Resources Board's (CARB's) Equipment and Process Certification Program.

4.1.1.2 Exhaust Gas Recirculation (EGR)

Exhaust gas recirculation reduces NOx emissions from diesel engines by re-circulating exhaust gases back to the turbocharger or, in the case of naturally aspirated engines, to the intake manifold. The temperature of the re-circulated gases is typically lowered with an intercooler. The cooled exhaust gases have a higher heat capacity than air and contain less oxygen thereby lowering NOx formation. Both low and high pressure EGR systems exist, but the low-pressure EGR is the most suitable for retrofit applications because it does not require engine modifications[1].

4.1.1.3 Ignition Timing Retard (ITR)

Retarding the ignition timing delays the start of fuel injection to later in the power cycle, which increases the volume of the combustion chamber and reduces the residence time of the combustion products, thereby reducing the magnitude and duration of peak temperatures. This, in turn, has the potential for reduced NOx formation.

[1] Stationary Diesel Engines in the Northeast: An Initial Assessment of the Regional Population, Control Technology Options and Air Quality Policy Issues, Northeast States for Coordinated Air Use Management, June 2003.tionary

4.1.1.4 Engine Replacement

Engine replacement is not a control technology *per se*, but the replacement of an existing engine with a new engine of more current design that emits NOx at a lower rate. The replacement engine would have to be capable of performing the duties required of the existing engine under the same operational conditions.

New replacement engines would be manufactured to meet Federal Tier 3 emission standards. The State of California imposes more stringent emission regulations than the Federal standards. Several of the references in this evaluation also include reference to the work by the California Air Resources Board (CARB). The CARB has created a voluntary Portable Engine Registration Program (PERP), which allows owners and operators to register their portable engines / equipment and operate them throughout the state without obtaining permits from local air districts. The current registration requirements for 2009 and 2010 are as follows:

- Engines rated 50 to 75 bhp: Interim Tier 4.
- Engines rated 75 to 750 bhp: Tier 3.
- Engines rated over 750 bhp and over: Tier 2.

Air Pollution Control Districts (APCDs) and Air Quality Management Districts (AQMDs) in California use this program when permitting portable engines including engines that are skid mounted for offshore platforms and drilling operations. For example, the Santa Barbara County APCD, which has offshore platforms in its jurisdiction, considers the CARB Portable Engine Registration Program as BACT, and does not require additional controls for engines associated with those sources.[2]

4.1.1.5 Selective Catalytic Reduction (SCR)

Selective catalytic reduction (SCR) systems are widely used technologies for controlling NO_X emissions from combustion sources. In the SCR process, ammonia or urea is mixed with the exhaust from a combustion device, and the NO_X reacts with the ammonia to form nitrogen and water. The mixture is passed through a catalyst bed, which allows the reduction reaction to proceed at lower temperatures than it would otherwise occur.

[2] Personal conversation with Terry Snyder of the Santa Barbara County Air Pollution Control District on November 17, 2009

4.1.1.6 NOx Adsorber

Under this technology, NOx is adsorbed by a chemical, typically a barium salt, or other elemental salt. The adsorbent is coated onto a honeycomb monolith or onto the inside surface of the exhaust duct. Once the catalyst is saturated, the NOx adsorbers must be regenerated. Regeneration requires heat and storage of chemical (e.g. potassium) which results in KNO3.

4.1.1.7 Lean NOx Catalyst (LNC) or Hydrocarbon-SCR (HC SCR)

Lean NOx catalysts (LNC), also known as hydrocarbon-SCR (HC-SCR) systems, use an advanced catalyst to capture and store NOx. The catalyst is regenerated during short periods when excess hydrocarbon (HC) in the exhaust removes the stored NOx and reduces it to nitrogen and water. The HC in the exhaust can be either unburned fuel ("native") from the engine, or additional fuel added to the exhaust gases through injection. This system has the advantage that no additional reductant, such as the ammonia or urea required for an SCR system, is necessary. Emissions of excess HC reductant (i.e., "slip") is addressed by a DPF (Diesel Particulate Filter) or a DOC (Diesel Oxidation Catalyst) located downstream of the system. Similar to SCR systems, LNC systems operate best at consistent high loads, and are not amenable to long periods of engine idle.

4.1.1.8 Summary of Potential Control Alternatives

Based on literature and database searches the following alternatives are possible for controlling NO_X emissions from compression ignition engines less than 600 hp:

- Cam Shaft Cylinder Reengineering Kit
- Exhaust Gas Recirculation (EGR)
- Ignition Timing Retard (ITR)
- Engine Replacement
- Selective Catalytic Reduction (SCR)
- NOx Adsorber
- Lean NOx Catalyst (LNC) or Hydrocarbon-SCR (HC-SCR)

Table 4-1 Provides a summary of the BACT Control Options for each of the engine groups considered here.

Table4- 1. Summary of NOx BACT Analysis for Small Engines

	Engine:	MLC Comp.	HPU	Cranes	Large Cement	Small Cement	Large Logging	Small Logging	Supply Ship Gen.
	Model:	Cat. C15	DD 8V71	Cat D343	DD 8V71	GM 3-71	Cat C7	Deere	Cat 3406
	Size:	540 hp	250 hp	365hp	365 hp	147 hp	250 hp	35 hp	292 hp
	Quantity:	3	2	2	2	1	1	1	2
Option									
Replace	Included?	No	No	No	No	No	No	No	No
	Cost/ton?		$10,580	$36,065	$50,822	$50,822		$89,890	$41,255
SCR	Included?	No	No	No	No	No	No	No	No
	Feasible?	No	No	No	No	No	No	No	No
	Cost/ton?								
NOx Adsorber	Included?	No	No	No	No	No	No	No	No
	Feasible?	No	No	No	No	No	No	No	No
	Cost/ton?								
Lean NOx Cat	Included?	No	No	No	No	No	No	No	No
	Feasible?	No	No	No	No	No	No	No	No
	Cost/ton?								
Clean Cam	Included?	Yes	No	No	No	No	Yes	Yes	No
	Feasible?		Yes	No	Yes	No			No
	Cost/ton?		$16,202		$12,206				
EGR	Included?	Yes	No	No	No	No	Yes	Yes	No
	Feasible?		No	No	No	No			No
	Cost/ton?								
ITR	Included?	Yes	No	No	No	No	Yes	Yes	No
	Feasible?		No	No	No	No			No
	Cost/ton?								

"Included" means the technology is currently installed or proposed to be installed.

4.1.2 Technical Feasibility of Control Alternatives

In this section, the control alternatives presented in the previous section are evaluated for technical feasibility as applied to the proposed engines under the proposed operational conditions.

4.1.2.1 Cam Shaft Cylinder Reengineering Kit

The CCTS retrofit kit is designed for older (pre-MY2000) Detroit Diesel Corporation two-stroke engines, model series 71 and 92. It is commercially available and has been installed on engines used in oil well drilling. The manufacturer also indicated that they are moving more towards marine applications and the product has been tested on a U.S. Navy ship. This product can be used with existing California diesel fuel, and testing is underway for the use with ULSD. This product was also tested in Alaska, and the manufacturer found that the system performs

adequately under the cold climate when using regular diesel fuel.[3] The CCTS retrofit kits are not available for the Caterpillar engines, thus this technology is judged infeasible for all engines except the two HPU engines and the two larger Cementing unit engines.

4.1.2.2 Exhaust Gas Recirculation (EGR)

It is not feasible to retrofit the HPU units, the cement units, the cranes and the supply ship generator with exhaust gas recirculation (EGR) systems. The HPU and cementing units are older two-stoke engines which are not amenable to these modifications because the engines intake through the block and vent through the valves. The cranes and the supply ship generators are older Caterpillar engines and EGR is not available for these engines. The remaining engines, the MLC compressors and the logging unit engines, are all newer and incorporate EGR in the low NOx design of the engine. Accordingly, the addition of EGR has been judged to be infeasible for all engines.

4.1.2.3 Ignition Timing Retard (ITR)

The extent to which the fuel injection can be retarded to reduce NOx emissions varies for each engine, as ITR can increase exhaust temperatures, which may adversely impact exhaust valve life and turbocharger performance, and extreme levels of ITR may result in combustion instability and a loss of power. In addition, the Brake-specific fuel consumption increases. While the maximum power output of the engine is reduced, this reduction is generally minor. In addition, emissions of hydrocarbons will increase.[4] This increase can be more than offset with a combined use of a diesel particulate filter. The newer engines are not amenable to ITR because these engines have already been optimized as part of the low NOx design. In effect, they incorporate the benefits of ITR in the low NOx design of the engine. The older engines do not have electronic fuel injection systems. Electronic controls are used to sense ambient conditions and engine operation to maximize performance and minimize emissions over a wide range of conditions, such as the transient operation of the engine and extreme ambient temperatures.[5] Due to the loss of power and the lack of electronic controls, this technology would have little, if any, benefit if applied to the HPU units, the cement units, the cranes or the supply ship generators. Accordingly, ITR has been classified as infeasible for all engines.

[3] Personal communication with Clean Cam Technology Systems manufacturer. November, 2009
[4] Proposed Determination of Reasonably Available Control Technology and Best Available Control Technology for Stationary Spark-Ignited Combustion Engines, California Air Resources Board, April, 2001
[5] Final Regulatory Support Document: Control of Emissions from New Marine Compression-Ignited Engines at or Above 30 Liters per Cylinder, USEPA, EPA420-R-03-004, January 2003.

4.1.2.4 Engine Replacement

Because Tier 3 is the most stringent non-road emission standards for engines rated between 75 and 750 brake horsepower-hours, operating with Tier 3 engines would be another emission reduction strategy. The three MLC air compressor engines and the Logging wireline unit engines are all Tier 3 and therefore are not candidates for engine replacement. To replace the cement unit engines with newer Tier 3 engines would require replacement of the entire cementing skid unit. This in turn would require more deck space required and a complete re-install. New Tier 3 engines are larger and will not fit in the existing skid frame. Engine replacement is not considered for the newer engines (the compressor engines and the larger logging unit) because these engines are already Tier 3 and there would be no benefit from replacing with a new unit. Engine replacement is evaluated for the other engines.

4.1.2.5 Selective Catalytic Reduction (SCR)

While SCR is proposed for the main generator sets, several issues have been identified with applying SCR to the smaller air compressor engines, HPUs and other smaller CI engines. The six Caterpillar D399 generator sets (1,325 hp each) provide the primary systems power for drilling and ship utilities and are operational at varying load levels throughout the drilling process. Under normal operating conditions, no more than five engines will operate at one time, leaving one as a spare. For these generators, Shell plans to utilize ~42 percent concentration urea, which corresponds to salt out temperature of approx 40 °F and an exhaust stream temperature to be maintained at 300 to 400°C. For these larger engines, it may be easier to maintain these temperatures due to their operating profile. However, the smaller engines operate on a more intermittent basis with a wide range of loads. The figures above show that the engines are located on deck where space is extremely limited.

The following analysis addresses the application of SCR to these smaller engines:

1. The dynamic loading of the smaller engines (short-term load swings of up to 50 percent) can be expected when these engines are operated. These changing load demands will cause the SCR system to be ineffective at scrubbing NOx emissions from the exhaust gases, because the engines may not be sufficiently loaded to achieve exhaust temperatures necessary for optimal performance of the catalyst. It is estimated that NOx reduction may be as little as 20 percent at exhaust temperatures below 400°F (204 ^{o}C)[6].

[6] Gaitley, J., The Operation of Selective Catalytic Reduction systems on Mobile Offshore Drilling Units, Transocean, September 9m 2009.

2. These engines will be operating under cold climate conditions in the Arctic, and the fact that they are all located on the topsides deck of the rig severely reduces their ability to maintain effectively high temperatures.

3. Urea concentration is directly correlated to salt out temperature. For smaller engines with lower exhaust temperatures, the urea concentration would logically need to increase to get the same NOx emissions reduction as compared to the larger generator engines. If urea was used on deck in the Arctic, it would be extremely difficult to keep the temperatures high enough to stay in solution. If the salt was allowed to precipitate out, there would be a continuous build up of salt on the SCR catalyst and a corresponding increase in engine backpressure, which ultimately could lead to catastrophic damage to the engine. A Catalyst vendor indicated a concern with exposing the catalysts to arctic temperatures without additional insulation and heat tracers.[7]

4. Due to the characteristics described in items 1 to 3 above, there is potential for catalyst fouling and disintegration[1]

5. Ammonia slip can occur when catalyst temperatures are not in the optimal range for the reaction or when too much ammonia is injected into the process. As the temperature range of these smaller diesel engines are lower than that of larger generator diesel sets (such as the D399 Gensets), the effectiveness will be significantly diminished.

6. As shown in Figures 3-1 to 3-3 space on the ship is extremely limited. In addition to retrofitting the engines with the SCR equipment, additional space is required onboard to store the reductant. Also, the logging winch units are designed to be space efficient portable systems. Due to increasing well depths the units have been upgraded from 170 HP non-tiered engines to 300 HP Tier 2 systems in the same space. The addition of turbochargers, charge air coolers, and larger silencers left no room for a SCR without a total redesign. As shown in Figures 3-1 to 3-3, space is extremely limited for all the other smaller engines as well. Furthermore, taking additional deck space for storage of reductants and other equipment would compromise the maneuverability during drilling operations. Attached is a drawing of the catalyst size and a drawing of the SCR injection system for the C-15 compressor engine[8]. As shown on the drawing each compressor engine would need to be retrofitted with the Catalyst and each engine would require the SCR injection system which measures approximately 5.5 ft x 3.5 ft. As shown in Figure 3-1, there is virtually no additional space that would accommodate these requirements.

7. The supply of urea for the SCR system would require a 1000 gallon storage tank. The urea would need to be purchased in 700 gallon quantities. Basically the urea flow rate is 1.1 gallons per hour. A 1000 gallon tank would allow for 900 hours of

[7] Personal conversation with Jeremy Harris of Johnson Matthey on November 24, 2009.
[8] Quote from Johnson Matthey by Jeremy Harris on November 24, 2009. See attached drawings and associated costs.

operation or 37 days at full load. Because one would not want to run the tank dry, one must replenish the tank at least once during the 63 day operating period. Further the space requirements for the storage tank (6.5 ft x 4.0 ft) are not adequate.

SCR technology does not represent BACT for the MLC compressor engines and other smaller engines. This conclusion is based primarily on the lack of space required for retrofitting the engines with SCR catalysts and injection systems. Furthermore, additional issues related to the operation of these systems in arctic conditions raised issues with operation of the catalysts in cold temperatures without additional insulation and heat tracers. Finally, even if sufficient space were available, the cost-effectiveness would be at the upper end of the acceptable cost-effectiveness for NOx technologies

4.1.2.6 NOx Adsorber

Applications of this technology have successfully achieved Tier 2, Bin 5 NOx emissions levels on light duty vehicles using 15 ppmv sulfur fuel. However we are not aware of any marine applications for this technology. At this time, Johnson Matthey is just starting to look at this technology for stationary applications.[9] Accordingly, this technology is not commercially available for stationary applications, particularly in a marine environment. Additionally, there may be a need for a second adsorber so that regeneration can occur while the second adsorber is placed into operation. Finally, additional storage would be required for chemicals. The second adsorber plus storage for chemicals would require additional space onboard the Discoverer.

There are no vendors that market this technology for stationary applications, particularly marine applications. NOx adsorber technology is not commercially available for the MLC engines and other smaller engines and therefore does not represent BACT for these engines

4.1.2.7 Lean NOx Catalysts (LNC) or Hydrocarbon-SCR (HC SCR)

While the Lean NOx Catalyst systems have performed well in some retrofit applications it has been primarily used in on-road diesel applications. The technology has been used in off-road applications to comply with EPA Tier 1 requirements on engines of 100 hp or greater. It has also been installed on backhoes, graders, wheel loaders and back-up generators. However we

[9] Personal communication with Jack Carroll of Johnson Matthey on November 9, 2009

are not aware of any marine applications at this time. Typical reductions for offroad diesel equipment have ranged from 10% to 25%[10]

There have been very few stationary applications of the Cleaire Lean Nox technology and while there are no technical reasons the technology would not work, representatives of the company indicated their technology would be more of a demonstration project for this application. Additionally, the application would require an increase in the tail pipe run to approximately a 36 to 48 inch exhaust and would be subject to cooling which would reduce the effectiveness of the systems. Furthermore the lack of available space and the need for technical support during the demonstration of this technology in this application would be difficult to overcome. Cleaire representatives indicated it would not recommend the Longview system as commercial for this application[11]

Neither the Lean NOx Catalysts (LNC) or the HC SCR technology is commercially available for the MLC engines and other smaller engines and therefore does not represent BACT for these engines. Neither of these systems offers the same performance as ammonia-based SCR systems. Depending on the system, a post-injection system may need to be supplemented by a separate fuel injection system. The potential NOx reductions range from 30% to 50%.

4.1.2.8 Summary of Alternatives Determined to be Technically Feasible

The following is a list of the technically feasible NO_X control technologies and possible combinations:

- Cam Shaft Cylinder Reengineering Kit for the HPU and larger cementing units only.
- Engine Replacement with new Tier 3 engines for those not already Tier 3.

4.1.3 Effectiveness of Remaining Alternatives

This section describes the remaining technologies in more detail and ranks them by effectiveness.

4.1.3.1 Cam Shaft Cylinder Reengineering Kit

The manufacturer states that Version I of the CCTS retrofit kit, which are applicable to use on some of the HPUs and Cementing Unit engines, can achieve emission reductions of no greater

[10] WRAP Offroad Diesel Retrofit Guidance Document, Volume 2-Section IV, Emissions Advantage, LLC, November 18,2005
[11] Personal Communication with Tom Swenson of Cleaire on November 19, 2009

than 1.0 g/bhp-hr of hydrocarbons, 8.5 g/bhp-hr of carbon monoxide, 5.8 g/bhp-hr of nitrogen oxides and 0.16 g/bhp-hr of diesel particulate matter. These claims have been verified by emission testing. However, there is a possible fuel penalty of 0 to 12 percent depending on the rebuild configuration due to the installation of the Cam Shaft Cylinder Reengineering Kit.

4.1.3.2 Engine Replacement

Replacing engines in some cases is an option while in others it is not an option due to the fact that the entire unit must be replaced. Replacing the engine is referred to as repowering and replacing the entire unit is referred to as replacement. For example, repowering the cement unit engines with newer Tier 3 engines would require replacement of the entire cementing skid unit. This in turn would require more deck space required and a complete re-install. The newer engines are larger with larger transmissions and will not fit in the existing skid frame. While the HPU units can be repowered, additional effort would be necessary to attach all the necessary hydraulic lines and other associated equipment.

4.1.3.3 Ranking of Remaining Alternatives by Effectiveness

The remaining technologically feasible control technologies ranked in decreasing order of effectiveness are:

- Engine Replacement
- Camshaft Cylinder Reengineering Kit

4.1.4 Cost-Effectiveness Analysis

The cost and cost effectiveness of the various technologies is discussed in this section. The cost effectiveness is in dollars per ton of pollutant reduced. The control technology costs are based on both information received from technology vendors and from published reports on the technologies. In some cases the cost was obtained from Shell. The sources of the cost and cost effectiveness are documented.

4.1.4.1 Cam Shaft Cylinder Reengineering Kit

The cost of the CCTS retrofit kit varies by the size of the engine, but is generally small. However, the cost of the kits is not the major cost of the engine rebuild. The major cost is associated with providing the technicians and mechanics to the site to extract the engine and ship it to and from the Discoverer and the engine shop. The cost of the actual kits varies between $4800 and $7500 for a 400hp engine, and between $4000 and $6100 for a 275hp

engine. However, the additional cost for shipping and logistics is estimated by Shell to be $50,000. According to the manufacturer, using this product does not affect the OEM engine warranty.[12] The retrofit is usually done by shipping the engines to the CCTS manufacturer or by shipping both the engines and the kit to a local shop. In addition to the capital costs, there are costs associated with increased fuel usage. The annualized cost for the CAM kit for the HPU engines is $16,202 per ton of NOx. For the Cementing unit engine, the annualized cost is $12,206 per ton of NOx.

4.1.4.2 Engine Replacement

Engine replacement has not been evaluated for cost for the new Tier 3 engines because replacement would not result in any lower emissions.

The cost for replacement of the cementing units has been estimated by Shell to exceed 1.6 million dollars to replace all three engines. The two larger cementing units would cost $656,059 each, while the smaller unti would cost $287,882. The cost-effectiveness for this option would be $50,822 per ton of NOx for the all engines[13].

To replace the HPU units with newer Tier 3 engines would cost $100,000 for each of the two Detroit 8V71 engines.[14] The cost-effectiveness for this option would be $10,238 per ton of NOx reduced. Overall NOx reductions would be 0.84 tons per year per engine or a total of 1.68 tons for both HPU engines.

Replacing the crane engines would be even less cost-effective. Smith Power Products provided a cost estimate of $65,000 each to replace the crane engines. Shell further estimates an additional $35,000 would be necessary for each engine for shipping and labor to perform the engine replacement. The net result is of $36,065 per ton of NOx reduced. Overall NOx reductions would be 0.41 tons per year for each engine or a total of 0.81 tons total for both cranes.

The current logging generator is Tier 2. A Tier 3 engine is available at a cost of $20,000 to 25,000. Based on annual NOx emissions of less than 0.05 tons, the cost per ton of NOx removed is over $85,000 if achieved through repowering.

---

[12] ARB study: http://www.arb.ca.gov/diesel/documents/rrpapp9.pdf

[13] Proposed Requirements for Stationary Diesel In-Use Agricultural Engines, Appendix F, Economic Analysis Methodology, Diesel Engine Costs, Page 3, September 6, 2006

Replacing the engine on the supply ship with a Tier 3 unit would not result in significant emissions reduction because the supply ship is only attached to the Discoverer for 96 hours per year. The net emission reduction is only 0.07 tons per year of NOx. The cost of a new engine is estimated at $50,000 with an annualized cost of $6,165. The cost effectiveness for repowering exceeds $40,000 per ton of NOx..

In conclusion, none of the engine replacement options evaluated are less than $10,000 per ton of NOx removed. Given the very small quantity of NOx that would be eliminated by these engine replacements, engine replacement is not cost effective and not BACT.

4.1.4.3 Selective Catalytic Reduction (SCR)

SCR has been eliminated on the basis of technical feasibility, but some cost analysis was provided as additional support for the conclusion that SCR is not appropriate for BACT. The cost effectiveness of applying SCR has been calculated by EPA in it's Cost-Effectiveness of Reducing Particulate Matter and Nitrogen Oxides Emissions from Heavy-Duty Non-road Diesel Engines through Retrofits . The cost-effectiveness for non-road equipment was calculated ranging from approximately $7,400 to $19,000 per ton of NOx reduced. For non-road engines the potential NOx reduction was an average of 70 percent. These estimates are based on typical operating conditions for each piece of equipment including generator sets, cranes and excavators. As expected, the cost-effectiveness for NOx was higher for earlier models. However, the cost-effectiveness for older engines (pre-2000) was significantly reduced. This is consistent with calculations of the cost-effectiveness for retrofitting the C-15 compressor engines (engine specifications attached). Based on the costs quoted by Johnson Matthey , the cost-effectiveness for retrofitting SCR for the compressor engines was calculated at $13,000 to $15,000 per ton of NOx reduced depending on the assumptions made for the operational characteristics of the engine. For example a 1998 crane engine retrofitted with SCR has a cost-effectiveness of $15,100. The crane engines on the Discoverer were built in 1974. Discussions with the State of Alaska permitting engineers indicates that the State of Alaska has not made BACT decisions with such a high cost-effectiveness for onshore or offshore engines.

[14] Proposed Requirements for Stationary Diesel In-Use Agricultural Engines, Appendix F, Economic Analysis Methodology, Diesel Engine Costs, Page 3, September 6, 2006

4.1.5 Energy and Environmental Considerations

4.1.5.1 Cam Shaft Cylinder Reengineering Kit

The Cam Shaft Cylinder Reengineering Kit is commercially available for certain DDC diesel engines and the emission reduction levels have been tested and verified. This technology is potentially applicable to the two HPU engines and two of three cementing unit engines onboard the Discoverer, but there are problems associated with its application on the Discoverer. The fuel penalty could potentially increase emissions of some pollutants and the Discoverer would need to be taken out of service while this engine retrofit is being performed. This technology is not recommended by Shell as BACT for the current application due to the small potential savings in NOx emissions from these small and infrequently used engines.

4.1.5.2 Exhaust Gas Recirculation (EGR)

A study to retrofit a Cummins engine with EGR and DPF with a cerium-based fuel additive to assist in filter regeneration on a UPS Package car did not achieve its objective[15]. The conclusion of this study was that rigorous application engineering and system integration are needed in order for the system to eliminate DPF face plugging and achieve regeneration, especially in stop-and-go duty cycles characterized by numerous hot restarts and low engine loads. To date, the only EGR/DPF system certified by the California Air Resources Board is for a mobile source application[16] As mentioned above, EGR is not feasible for the older HPU units and cementing units because they are older two-stroke engines and do not have electronic injection systems.

4.1.5.3 Ignition Timing Retard (ITR)

While the newer MLC compressor engines represent Tier 3 technology, ITR is feasible on the older engines particularly the 8V-71 engines used for the HPUs and the Cementing Units. However due to the loss of power and the lack of electronic controls, this technology would have little, if any, improvement in emissions. It should be noted all engines on this rig including Cement Units are mechanically injected making it more difficult to adjust the engines under ambient conditions found in the arctic. It should be pointed out that HC and DPM will increase if only ITR is applied to these engines. ITR and AC reduce NOx at the expense of incomplete combustion; this increases PM, VOC, and CO emissions, reduced fuel economy,

[15] Demonstration of a Diesel Fuel-Borne Catalyst System and Low NOx Control Technology for Reducing Particulate and NOx Emissions, Arthur D. Little, Technical Report FR-00-104, June 28, 2001.
[16] California Air Resources Board, Verification Procedure-Currently Verified, http://www.arb.ca.gov/diesel/verdev/vt/cvt.htm.

and contaminates the lube oil with soot.24 Furthermore, as previously discussed Engines FD-12 through FD-20 will be equipped with CDPF controls to reduce PM and CO emissions. Without electronic fuel injection systems, it would be difficult to achieve the level of control identified for this technology. Due to these energy and environmental considerations, ITR is not considered BACT.

4.1.6 Selection of BACT for NO_X Emissions From Small Diesel Engines

Based on the analysis presented in this section, Shell proposes that BACT for NO_X emissions from small diesel engines be:

- Mud Line Cellar Air Compressors – 3 g/hp-hr achieved through Tier 3 engines.
- Hydraulic Power Units – 9.8 g/hp-hr achieved through good combustion
- Crane Engines – 7.7 g/hp-hr achieved through good combustion
- Large Cementing Units – 11.72 g/hp-hr achieved through good combustion
- Small Cementing Units – 11.72 g/hp-hr achieved through good combustion
- Large Logging Units – 3 g/hp-hr achieved through a Tier 3 engine
- Small Logging Units – 5.6 g/hp-hr achieved through a Tier 2 engine
- Supply Ship Generator – 14 g/hp-hr achieved through good combustion

4.2 EXHAUST PARTICULATE MATTER BACT ANALYSIS

Diesel particulate matter (PM) is a complex mixture of compounds which are formed through a number of different mechanisms. PM is comprised of the soluble organic fraction (SOF), the insoluble (solid) fraction, and the sulfate fraction. Fuel and lube oil contribute to the SOF fraction. The insoluble fraction is primarily dry carbonaceous soot from “too-rich-to-burn” fuel combustion. The sulfate fraction is produced from the sulfur in diesel fuel. This fraction can only be controlled by limiting fuel sulfur content.

In this discussion, we refer to PM generically. Virtually all the diesel PM is PM10, and most of the PM_{10} is assumed to be $PM_{2.5}$.

4.2.1 Identification of Possible Control Alternatives

The available PM control technologies for the *Discoverer's* engines, boilers, and incinerator were determined from searches performed on the RBLC and the CA-BACT, as well as a review of other available technologies.

PM emissions from diesel engines can be reduced with combustion controls that prevent the formation of PM and add-on controls that capture it. Because a portion of the sulfur contained in combusted fuels becomes sulfates, which are particles, PM emissions can also be reduced by reducing the sulfur content of the fuel.

Regardless of the technology applied to achieve BACT, the control option must result in an emission rate no less stringent than the applicable NSPS emission rate, if any NSPS standard for that pollutant is applicable to the source. As discussed above in the NOx BACT analysis, EPA has promulgated exhaust emission standards for non-road engines under 40 CFR 89.112 in 1998. Engines designed to meet Tier 2 or 3 PM emission standards typically employ a combination of low PM emitting engine designs and DPF or CDPF.[17] The overall PM control for Tier 3 engines is 85 percent.[18]

4.2.1.1 Good Combustion Practices, Low Sulfur Fuel (LSF), and Crankcase Ventilation Controls

The concept of applying combustion controls to minimize PM10 emissions includes adequate fuel residence time in the combustion zone, proper fuel-air mixing, and combustion temperature control to ensure the maximum amount of fuel is combusted. Optimization of these factors to reduce PM formation can result in an increase in the NOx emissions. Thus, engines are generally designed to balance control mechanisms to achieve the lowest possible emissions of all pollutants.

LSF reduces the sulfate PM fraction by limiting the amount of sulfur in the fuel that is available for sulfate formation.

The crankcase of a combustion engine accumulates gases and oil mist called blowby that leak into the crankcase from the combustion chamber and other sources. The blowby gases must be vented from the crankcase to prevent damage. Due to the fact that blowby gas contains PM,

[17] Caterpillar brochure. *Cat® C15 for Fleet and Line Haul Performance, ACERT™ Technology for 2007*.
[18] The Tier 3 PM emission standard for large non-road engines is 0.2 g/kWh or 0.15 g/hp-hr. The base case is considered to be approximately 1 g/hp-hr.

which is 100 percent SOF,[19] it should be handled such that it does not contribute to PM emissions. The CCV system was developed to remove blowby from the engine and to prevent those vapors from being expelled into the atmosphere. The CCV system does this by directing the blowby back to the intake manifold, so it can be combusted.

Systems used to control combustion for the purpose of limiting all pollutants and ensuring efficient engine operation are employed on all modern diesel engines, and will be employed on all diesel engines at the source. Furthermore, all diesel engines at the source will burn ultra low sulfur diesel (ULSD) fuel, and be equipped with either a closed circuit crankcase ventilation system or an open system with coalescing filters to control PM emissions from crankcase ventilation if an exhaust port exists on which to attach the control device. Because these control technologies and approaches will be employed, they will be discussed no further in this analysis, and are considered part of the baseline BACT determination.

4.2.1.2 Engine Replacement

Engine replacement would entail removal of the existing engine in favor of a Tier 3 engine.

4.2.1.3 Oxidation Catalyst (OxyCat)

An OxyCat removes the SOF of PM through catalytic oxidation of the combustible organic matter resulting in an overall PM control efficiency of 50 percent.[20]

4.2.1.4 Diesel Particulate Filter (DPF)

A DPF removes the insoluble (solid) fraction of PM (soot) by filtration with an overall PM control efficiency of 40 to 50 percent.[21,22]

4.2.1.5 Catalytic Diesel Particulate Filter (CDPF)

CDPFs remove both the SOF and the insoluble fraction of PM with an overall PM control efficiency of 85 percent.[23]

Table 4-2 summarizes the available control technologies and the BACT process.

---

[19] Jaaskelainen, Hannu. DieselNet Technology Guide. *Crankcase Ventilation.* January 2009.
[20] Holmström, Per. D.E.C. Marine AB. [Communication with R. Steen, Air Sciences Inc.]. February 9, 2009.
[21] Khair, Magdi K. DieselNet Technology Guide. *Engine Design for PM Control.* May 2002.
[22] Majewski, Addy W. DieselNet Technology Guide. *Diesel Particulate Filters.* July 2001.
[23] California EPA. Air Resource Board. *Verification Procedure - Currently Verified, CleanAIR Systems PERMIT.* January 26, 2009. http://www.arb.ca.gov/diesel/verdev/vt/cvt.htm

Table4- 2. Summary of PM BACT Analysis for Small Engines

	Engine:	MLC Comp.	HPU	Cranes	Large Cement	Small Cement	Large Logging	Small Logging	Supply Ship Gen.
	Model:	Cat. C15	DD 8V71	Cat D343	DD 8V71	GM 3-71	Cat C7	Deere	Cat 3406
	Size:	540 hp	250 hp	365hp	365 hp	147 hp	250 hp	35 hp	292 hp
	Quantity:	3	2	2	2	1	1	1	2
Option									
Replace	Included?	No	No	No	No	No	No	No	No
	Cost/ton?		$50,600	$475,900	$213,500	$213,500		$332,200	$455,728
CDPF	Included?	No	Yes	Yes	Yes	Yes	No	Yes	No
	Feasible?	Yes					Yes		Yes
	Cost/ton?	$41,883					$90,467		$162,441
OxyCat	Included?	No					No		No
	Feasible?	Yes					Yes		Yes
	Cost/ton?	$32,139					$55,233		$61,723
DPF	Included?	Yes					Yes		No
	Feasible?								Yes
	Cost/ton?								$79,359

"Included" means the technology is currently installed or proposed to be installed.

4.2.2 Technical Feasibility of Control Alternatives

4.2.2.1 Engine Replacement

Tier 2 or 3 level controls and PCV are intrinsic to the original engine design. Therefore, replacement of an engine with one employing these control technologies are considered technically infeasible if they are already a part of the design of the diesel engines. The three MLC compressor (540 hp Caterpillar C-15) engines and the large logging (260 hp Cat C7) engine are already Tier 3 engines. As indicated in the NOx BACT analysis, replacement of an existing engine with a new Tier 3 engine is only practical (and, therefore, technically feasible) for the HPU (250 hp DD 8V71) engines, the crane (365 hp Cat D343) engines, the cementing units (powered by 335 hp DD 8V71 and 147 hp GM 3-71 engines), the logging winch (36 kW John Deere) engine and the supply ship generator (Cat. 292 hp D3406 engine).

4.2.2.2 Oxidation Catalyst (OxyCat)

OxyCats are considered technically feasible for all diesel engines and compressors.

4.2.2.3 Diesel Particulate Filter (DPF)

DPFs are considered technically feasible for all diesel engines and compressors. It should be noted that DPF technology is already incorporated in Tier 3 engines.

4.2.2.4 Catalytic Diesel Particulate Filter (CDPF)

CDPFs are considered technically feasible for all small diesel engines and compressors. CDPF is not feasible for the six generator engines because the increased backpressure adversely affects the SCR .

4.2.3 Effectiveness of Remaining Alternatives

4.2.3.1 Engine Replacement

As stated in the previous section, the only units for which replacement with a Tier 3 unit is technically feasible are the HPU engines, the crane engines, the cementing units (the entire unit, not just the engine, would be replaced), the logging winch engine and the supply ship generator. The expected PM emission reduction associated with each replacement is as follows:

- HPU Compressor Engines (2 X 250 hp DD 8V71) – 0.49 tons per year (tpy), equivalent to a 93 percent reduction
- Crane Engines (2 X 365 hp Cat D343) – 0.051 tpy, equivalent to a 71 percent reduction
- Cementing Units (powered by 2 X 335 hp DD 8V71 and 1 X 147 hp GM 3-71 engines) – 0.92 tpy, equivalent to a 95 percent reduction
- Logging Winch Engine (1 X 36 kW John Deere) – 0.0095 tpy, equivalent to a 50 percent reduction.
- Supply ship Engine Generator (1 X 292 hp Cat. D3406) – 0.01 tpy, equivalent to a 90% reduction

4.2.3.2 Oxidation Catalyst (OxyCat)

An OxyCat removes the SOF of PM through catalytic oxidation of the combustible organic matter resulting in an overall PM control efficiency of 50 percent.[24]

4.2.3.3 Diesel Particulate Filter (DPF)

A DPF removes the insoluble (solid) fraction of PM (soot) by filtration with an overall PM control efficiency of 40 to 50 percent.[25,26]

---

[24] Holmström, Per. D.E.C. Marine AB. [Communication with R. Steen, Air Sciences Inc.]. February 9, 2009.
[25] Khair, Magdi K. DieselNet Technology Guide. *Engine Design for PM Control.* May 2002.
[26] Majewski, Addy W. DieselNet Technology Guide. *Diesel Particulate Filters.* July 2001.

4.2.3.4 Catalytic Diesel Particulate Filter (CDPF)

CDPFs remove both the SOF and the insoluble fraction of PM with an overall PM control efficiency of 85 percent.[27]

4.2.3.5 Ranking of Remaining Alternatives by Effectiveness

The remaining technologically feasible control technologies ranked in decreasing order of effectiveness are:

- Engine Replacement (50 – 95 percent reduction, depending on engine)
- CDPF (85 percent reduction)
- OxyCat (50 percent reduction)
- DPF (40 – 50 percent reduction)

4.2.4 Cost-Effectiveness Analysis

4.2.4.1 Engine Replacement

The cost effectiveness of replacing existing engines or units with Tier 3 equivalents varies depending upon the engine or unit. The cost effectiveness associated with each replacement is as follows:

- HPU Compressor Engines (2 X 250 hp DD 8V71) – $50,600/ton PM
- Crane Engines (2 X 365 hp Cat D343) – $476,000/ton PM
- Cementing Units (powered by 2 X 335 hp DD 8V71 and 1 X 147 hp GM 3-71 engines) – $214,000/ton PM
- Logging Winch Engine (1 X 36 kW John Deere) – $332,000/ton PM
- Supply Ship Engine Generator (1 X 292 hp Cat. D3406) - $455,728/ton PM

Although replacement of engines or units with Tier 3 equivalents is technically feasible for some engines, and would result in PM emission reductions, the reductions are small compared to the expense of the engine replacement. Engine replacement is not a cost-effective PM control strategy.

[27] California EPA. Air Resource Board. *Verification Procedure - Currently Verified, CleanAIR Systems PERMIT*. January 26, 2009. http://www.arb.ca.gov/diesel/verdev/vt/cvt.htm

4.2.4.2 Catalytic Diesel Particulate Filter (CDPF)

Shell proposes to install CDPF on all small diesel engines and diesel compressors that are not already Tier 3 engines (i.e., the 549 hp MLC compressor engines and the 250 hp logging engines) except for the supply ship generator. Cost effectiveness calculations have been performed for the addition of CDPF to the MLC Compressors engines, the 250 hp logging engine and the supply ship generator.

- MLC Compressor Engines (3 X 1325 hp Cat. D399) - $41,900/ton PM
- Logging Generator Engine (1 X 250 hp Cat C7) - $90,500/ton PM
- Supply Ship Engine Generator (1 X 292 hp Cat D3406) - $162,400/ton PM

Although addition of CDPF to the Tier 3 engines or the supply ship is technically feasible, and would result in PM emission reductions, the reductions are small compared to the expense of the CDPF addition, thus, CDPF addition is not a cost-effective PM control strategy.

4.2.4.3 Oxidation Catalyst (OxyCat)

Because a more stringent PM control technologies (CDPF) has been proposed as BACT for all small diesel engines and diesel compressors except the Tier 3 engines and the supply ship, no cost-effectiveness analysis was developed for OxyCat for any of the engines except the Tier 3 and Supply ship.

- MLC Compressor Engines (3 X 1325 hp Cat. D399) - $32,100/ton PM
- Logging Generator Engine (1 X 250 hp Cat C7) - $55,200/ton PM
- Supply Ship Engine Generator (1 X 292 hp Cat D3406) - $61,700/ton PM

Although addition of OxyCat to the Tier 3 engines and supply ship is technically feasible, and would result in PM emission reductions, the reductions are small compared to the expense of the OxyCat addition, thus, OxyCat addition is not a cost-effective PM control strategy.

4.2.4.4 Diesel Particulate Filter (DPF)

Because a more stringent PM control technologies (Tier 3 engines or CDPF) has been proposed as BACT for all small diesel engines and diesel compressors except the supply ship, no cost-effectiveness analysis was developed for DPF for any of the engines except the Supply ship.

- Supply Ship Engine Generator (1 X 292 hp Cat D3406) - $79,400/ton PM

Although addition of DPF to the supply ship is technically feasible, and would result in PM emission reductions, the reductions are small compared to the expense of the DPF addition, thus, DPF addition is not a cost-effective PM control strategy.

4.2.5 Selection of BACT for PM Emissions From Small Diesel Engines

Based on the analysis presented in this section, Shell proposes that BACT for PM emissions from small diesel engines and diesel compressor be as follows:

- Mud Line Cellar Air Compressors – 0.082 g/hp-hr, achieved using the existing Tier 3 engines.
- Hydraulic Power Units – 0.19 g/hp-hr, achieved using CDPF
- Crane Engines – 0.053 g/hp-hr, achieved using CDPF
- Cementing Units – 0.29 g/hp-hr, achieved using CDPF
- Logging Unit – 0.082 g/hp-hr, achieved using the existing Tier 3 engine.
- Logging Winch Unit – 0.067 g/hp-hr, achieved using CDPF
- Supply Ship Engine Generator – 0.98 g/hp-hr, achieved through good combustion

Appendix – Cost Effectiveness Calculations and Communication Records

Engine Replacement

Fields	Value	References
HC to ROG Conversion	1.26639	
grams per ton	907184.14	
Shipping Cost (one way)	$15,000	Shell
On-site Labor	$20,000	Shell

Cost estimate given by Shell

HPU	175-300 HP		Assumptions and References
	Tier 0 Baseline	Tier 3 Engines	
NOx Emission Std (g/bhp-hr)	9.81	4.03	Offroad Engine Emission Standards http://www.epa.gov/otaq/standards/nonroad/nonroadci.htm
PM Emission Std (g/bhp-hr)	1.26	0.09	
HC Emission Std (g/bhp-hr)	0	0.15	
Average Horsepower (hp)	250	250	Permit Application
Load Factor	0.50	0.50	Assume 50% load
Activity (hr/yr)	1,512	1,512	Assume 24 hr/day operation for 63 days
Incremental Capital Cost		$ 100,000	Shell esimate
Shipping + Labor Cost		$ -	Shell esimate
Useful Life (years)	10	10	
Annualized Capital Cost ($/yr)		$12,329	4% interest
NOx Emission Factor (g/hr)	1226	504	
PM Emission Factor (g/hr)	158	11	
HC Emission Factor (g/hr)	0	19	
NOx (tons/year)	2.04	0.84	
PM (tons/year)	0.26	0.02	
HC (tons/year)	-	0.03	
NOx Reduction (tons/year)		1.20	
PM Reduction (tons/year)		0.24	
HC Reduction (tons/year)		-	
Cost-Effectiveness NOx ($/ton)		***$10,238***	
Cost-Effectiveness PM ($/ton)		***$50,580***	

Cementing Units Unit Replacement	100-175 HP		300-600 HP		Assumptions and References
	Tier 0 Baseline	Tier 3 Engines	Tier 0 Baseline	Tier 3 Engine	

NOx Emission Std (g/bhp-hr)	11.72	4.03	11.72	4.03	Offroad Engine Emission Standards http://www.epa.gov/otaq/standards/nonroad/nonroadci.htm
PM Emission Std (g/bhp-hr)	1.92	0.09	1.92	0.09	
HC Emission Std (g/bhp-hr)	0	0.15	0	0.15	
Average Horsepower (hp)	147	147	335	335	Permit Application
Load Factor	0.5	0.5	0.50	0.50	Assume 50% load
Activity (hr/yr)	1121	1121	1121	1121	Assume 27.8% per day operation for 168 days
Incremental Capital Cost		$ 287,882		$ 656,059	Shell esimates $1.6M for 3 units
Useful Life (years)	10	10	10	10	
Annualized Capital Cost ($/yr)		$35,493		$80,886	4% interest
NOx Emission Factor (g/hr)	861	296	1963	675	
PM Emission Factor (g/hr)	141	7	322	15	
HC Emission Factor (g/hr)	0	11	0	25	
NOx (tons/year)	1.06	0.37	2.43	0.83	
PM (tons/year)	0.17	0.01	0.40	0.02	
HC (tons/year)	-	0.01	-	0.03	
NOx Reduction (tons/year)		0.70		1.59	
PM Reduction (tons/year)		0.17		0.38	
HC Reduction (tons/year)		-		-	
Cost-Effectiveness NOx ($/ton)		***$50,822***		***$50,822***	
Cost-Effectiveness PM ($/ton)		***$213,517***		***$213,517***	

Cranes	**300-600 HP**		**Assumptions and References**
	Tier 0 Baseline	**Tier 3 Engines**	
NOx Emission Std (g/bhp-hr)	7.7	4.33	Offroad Engine Emission Standards http://www.epa.gov/otaq/standards/nonroad/nonroadci.htm
PM Emission Std (g/bhp-hr)	0.36	0.10	
HC Emission Std (g/bhp-hr)	0	0.15	
Average Horsepower (hp)	365	365	Permit Application
Load Factor	0.50	0.50	Variable, here assume 50% load
Activity (hr/yr)	504	504	Assume 8 hr/day operation for 63 days
Incremental Capital Cost		$ 65,000	Smith Power Products (Capital Cost + Installation)
Shipping + Labor Cost		$ 35,000	
Useful Life (years)	10	10	
Annualized Capital Cost ($/yr)		$12,329	4% interest
NOx Emission Factor (g/hr)	1405	790	
PM Emission Factor (g/hr)	66	19	
HC Emission Factor (g/hr)	0	27	

NOx (tons/year)	0.78	0.44	
PM (tons/year)	0.04	0.01	
HC (tons/year)	-	0.02	
NOx Reduction (tons/year)		0.34	
PM Reduction (tons/year)		0.03	
HC Reduction (tons/year)		-	
Cost-Effectiveness NOx ($/ton)		***$36,065***	
Cost-Effectiveness PM ($/ton)		***$475,887***	

Small Logging Generator	**300-600 HP**		**Assumptions and References**
	Tier 2 Baseline	**Tier 3 Engines**	
NOx Emission Std (g/bhp-hr)	5.60	4.33	Offroad Engine Emission Standards http://www.epa.gov/otaq/standards/nonroad/nonroadci.htm
PM Emission Std (g/bhp-hr)	0.45	0.10	
HC Emission Std (g/bhp-hr)	0	0.15	
Average Horsepower (hp)	35	35	Permit Application
Load Factor	0.50	0.50	Variable, here assume 50% load
Activity (hr/yr)	1121	1,121	Based on Cementing Units
Incremental Capital Cost		$ 20,000	Smith Power Products (Capital Cost + Installation)
Shipping + Labor Cost			
Useful Life (years)	10	10	
Annualized Capital Cost ($/yr)		$2,466	4% interest
NOx Emission Factor (g/hr)	98	76	
PM Emission Factor (g/hr)	8	2	
HC Emission Factor (g/hr)	0	3	
NOx (tons/year)	0.12	0.09	
PM (tons/year)	0.01	0.00	
HC (tons/year)	-	0.00	
NOx Reduction (tons/year)		0.03	
PM Reduction (tons/year)		0.01	
HC Reduction (tons/year)		-	
Cost-Effectiveness NOx ($/ton)		***$89,890***	
Cost-Effectiveness PM ($/ton)		***$332,200***	

Supply ship Generator	**300-600 HP**		**Assumptions and References**
	Tier 0 Baseline	**Tier 3 Engines**	

NOx Emission Std (g/bhp-hr)	14.00	4.33	Offroad Engine Emission Standards http://www.epa.gov/otaq/standards/nonroad/nonroadci.htm
PM Emission Std (g/bhp-hr)	0.98	0.10	
HC Emission Std (g/bhp-hr)	0	0.15	
Average Horsepower (hp)	292	292	Permit Application
Load Factor	0.50	0.50	Variable, here assume 50% load
Activity (hr/yr)	96	96	Based on Cementing Units
Incremental Capital Cost		$ 50,000	Smith Power Products (Capital Cost + Installation)
Shipping + Labor Cost			
Useful Life (years)	10	10	
Annualized Capital Cost ($/yr)		$6,165	4% interest
NOx Emission Factor (g/hr)	2044	632	
PM Emission Factor (g/hr)	143	15	
HC Emission Factor (g/hr)	0	22	
NOx (tons/year)	0.22	0.07	
PM (tons/year)	0.02	0.00	0.10660981
HC (tons/year)	-	0.00	
NOx Reduction (tons/year)		0.15	
PM Reduction (tons/year)		0.01	
HC Reduction (tons/year)		-	
Cost-Effectiveness NOx ($/ton)		***$41,255***	
Cost-Effectiveness PM ($/ton)		***$455,728***	

SCR Retrofits

Fields	Value	References
Cost of diesel (per gallon)	$2.79	http://tonto.eia.doe.gov/dnav/pet/pet_pri_gnd_dcus_nus_w.htm
Urea Cost (per gallon)	$3.00	Johnson and Matthey
NOx Reduction	70%	EPA Study (Nonroad Diesel Retrofit study)
PM Reduction	0%	
HC Reduction	0%	
HC to ROG Conversion	1.26639	
grams per ton	907184.14	
Cost of Catalyst	8000	Johnson and Matthey
Cost of Catalyst Maintenace (per year)	7500	Johnson and Matthey
Lifetime of Catalyst (years)	6	Johnson and Matthey
Urea Flow Rate (gal/hr) at full load	1.1	Johnson and Matthey
Shipping Cost (two way)	$30,000	Shell
On-site Labor	$20,000	Shell

MLC Air Compressors	300-600 HP		Assumptions and References
	Tier 3 Baseline	SCR	
NOx Emission Std (g/bhp-hr)	2.85	0.86	Offroad Engine Emission Standards http://www.epa.gov/otaq/standards/nonroad/nonroadci.htm
PM Emission Std (g/bhp-hr)	0.15	0.15	
HC Emission Std (g/bhp-hr)	0.15	0.15	
Average Horsepower (hp)	540	540	Permit Application
Load Factor	0.50	0.50	Assume 50% load
Activity (hr/yr)	1,512	1,512	Assume 24 hr/day operation for 63 days
Energy Consumption Factor (bhp-hr/gal)	19.1	19.1	
Fuel Usage (gal/yr)	42,748	42,748	
Urea Usage (gal/yr)		832	Assume linear relationship between load and urea usage
Fuel + Urea Cost ($/yr)	119,138	121,632	
Incremental Urea Fuel Cost/yr		$2,495	
Shipping + Labor Cost		$50,000	
Incremental Capital Cost		$88,333	Prorate cost of catalyst to 10 years + 10 years of maintenance
Useful Life (years)	10	10	
Annualized Capital Cost ($/yr)		$17,055	4% interest
NOx Emission Factor (g/hr)	770	231	

PM Emission Factor (g/hr)	41	41	
HC Emission Factor (g/hr)	41	41	
NOx (tons/year)	1.28	0.38	
PM (tons/year)	0.07	0.07	
HC (tons/year)	0.07	0.07	
NOx Reduction (tons/year)		0.90	
PM Reduction (tons/year)		-	
HC Reduction (tons/year)		-	
Cost-Effectiveness, SCR only ($/ton)		$18,997	
CE Including Fuel & Urea ($/ton)		***$21,776***	

Cam Shaft Cylinder Reengineering Kit

Fields	Value	References
Cost of diesel:	$2.79	http://tonto.eia.doe.gov/dnav/pet/pet_pri_gnd_dcus_nus_w.htm
Incremental Fuel Consumption	12%	http://www.arb.ca.gov/diesel/documents/rrpapp9.pdf
HC to ROG Conversion	1.26639	
Grams per Ton	907184.74	
Shipping Cost (two way)	$30,000	Shell
On-site Labor	$20,000	Shell

HPU	175-300 HP		Assumptions and References
	Tier 0 Baseline	CCTS	
NOx Emission Std (g/bhp-hr)	9.81	5.8	Offroad Engine Emission Standards
PM Emission Std (g/bhp-hr)	0.42	0.16	http://www.epa.gov/otaq/standards/nonroad/nonroadci.htm
HC Emission Std (g/bhp-hr)	0.00	1.00	CCTS EF: CARB certification claims
Average Horsepower (hp)	250	250	Permit Application
Load Factor	0.5	0.5	Assume 50% load
Activity (hr/yr)	1512	1512	Assume 24 hr/day operation for 63 days
Energy Consumption Factor (bhp-hr/gal)	19.1	19.1	
Fuel Usage (gal/yr)	19791	22165	Fuel penalty ranges between 0%-12%; assume worst case of 12%
Fuel Cost ($/yr)	55,156	61,775	
Incremental Fuel Cost/yr		$6,619	
Incremental Capital Cost		$6,100	http://www.arb.ca.gov/diesel/documents/rrpapp9.pdf
Shipping + Labor		$50,000	Shell
Useful Life (years)	10	10	
Annualized Capital Cost ($/yr)		$6,917	4% interest
NOx Emission Factor (g/hr)	1226	725	
PM Emission Factor (g/hr)	53	20	
HC Emission Factor (g/hr)	0	125	
NOx (tons/year)	2.04	1.21	
PM (tons/year)	0.09	0.03	
HC (tons/year)	-	0.21	
NOx Reduction (tons/year)		0.84	
PM Reduction (tons/year)		0.06	
HC Reduction (tons/year)		(0.21)	

NOx Cost-Effectiveness		***$16,202***	

Cementing Units	300-600 HP		Assumptions and References
	Tier 0 Baseline	CCTS	
NOx Emission Std (g/bhp-hr)	9.81	5.8	Offroad Engine Emission Standards
PM Emission Std (g/bhp-hr)	0.41	0.16	http://www.epa.gov/otaq/standards/nonroad/nonroadci.htm
HC Emission Std (g/bhp-hr)	0.00	1.00	CCTS EF: CARB certification claims
Average Horsepower (hp)	335	335	Permit Application
Load Factor	0.5	0.5	Assume 50% load
Activity (hr/yr)	1121	1121	Assume 27.8% per day operation for 168 days
Energy Consumption Factor (bhp-hr/gal)	19.1	19.1	
Fuel Usage (gal/yr)	19660	22019	
Fuel Cost ($/yr)	54,792	61,367	
Incremental Fuel Cost/yr		$6,575	
Incremental Capital Cost		$7,500	http://www.arb.ca.gov/diesel/documents/rrpapp9.pdf
Shipping + Labor		$50,000	Shell
Useful Life (years)	10	10	4% interest
Annualized Capital Cost ($/yr)		$7,089	
NOx Emission Factor (g/hr)	1643	972	
PM Emission Factor (g/hr)	69	27	
HC Emission Factor (g/hr)	0	168	
NOx (tons/year)	2.74	1.62	
PM (tons/year)	0.11	0.04	
HC (tons/year)	-	0.28	
NOx Reduction (tons/year)		1.12	
PM Reduction (tons/year)		0.07	
HC Reduction (tons/year)		(0.28)	
NOx Cost-Effectiveness		***$12,206***	

CDPF Addition to Specific Engines

Fields	Value	References
Cost of diesel (per gallon)	$2.79	http://tonto.eia.doe.gov/dnav/pet/pet_pri_gnd_dcus_nus_w.htm
grams per ton	907184.14	

MLC Air Compressors	300-600 HP		Assumptions and References
	Tier 3 Baseline	CDPF	
PM Emission Std (g/bhp-hr)	0.15	0.02	Offroad Engine Emission Standards http://www.epa.gov/otaq/standards/nonroad/nonroadci.htm
HC Emission Std (g/bhp-hr)	0.15	0.15	
Average Horsepower (hp)	540	540	Permit Application
Load Factor	0.50	0.50	Assume 50% load
Activity (hr/yr)	1,512	1,512	Assume 24 hr/day operation for 63 days
Energy Consumption Factor (bhp-hr/gal)	19.1	19.1	
Fuel Usage (gal/yr)	42,748	42,748	
			Assume linear relationship between load and urea usage
Incremental Capital Cost		$19,491	Use cost for Cementing Unit
Useful Life (years)	10	10	
Annualized Capital Cost ($/yr)		$2,403	4% interest
PM Emission Factor (g/hr)	41	6	
HC Emission Factor (g/hr)	41	41	
NOx (tons/year)	-	-	
PM (tons/year)	0.07	0.01	
HC (tons/year)	0.07	0.07	
NOx Reduction (tons/year)		-	
PM Reduction (tons/year)		0.06	
HC Reduction (tons/year)		-	
Cost-Effectiveness PM ($/ton)		***$41,883***	

Supply ship Generator	300-600 HP		Assumptions and References
	Tier 0 Baseline	Tier 3 + CDPF	
PM Emission Std (g/bhp-hr)	0.98	0.02	Offroad Engine Emission Standards http://www.epa.gov/otaq/standards/nonroad/nonroadci.htm
HC Emission Std (g/bhp-hr)	0	0.15	
Average Horsepower (hp)	292	292	Permit Application
Load Factor	0.50	0.50	Variable, here assume 50% load
Activity (hr/yr)	96	96	Based on Cementing Units
Incremental Capital Cost		$ 19,491	Use cost for cementing unit
Shipping + Labor Cost			
Useful Life (years)	10	10	
Annualized Capital Cost ($/yr)		$2,403	4% interest
NOx Emission Factor (g/hr)	0	0	
PM Emission Factor (g/hr)	143	3	
HC Emission Factor (g/hr)	0	22	
PM (tons/year)	0.02	0.00	0.022959184
NOx Reduction (tons/year)		-	
PM Reduction (tons/year)		0.01	
HC Reduction (tons/year)		-	

Cost-Effectiveness PM ($/ton)		***$162,441***	

Large Logging Engine	**175-300 HP**		**Assumptions and References**
	Tier 3 Baseline	**CDPF**	
PM Emission Std (g/bhp-hr)	0.15	0.02	Offroad Engine Emission Standards http://www.epa.gov/otaq/standards/nonroad/nonroadci.htm
HC Emission Std (g/bhp-hr)	0.15	0.15	
Average Horsepower (hp)	250	250	Permit Application
Load Factor	0.50	0.50	Assume 50% load
Activity (hr/yr)	1121	1,121	Assume 24 hr/day operation for 63 days
Energy Consumption Factor (bhp-hr/gal)	19.1	19.1	
Fuel Usage (gal/yr)	14,671	14,671	
			Assume linear relationship between load and urea usage
Incremental Capital Cost		$19,491	Use cost for Cementing Unit
Useful Life (years)	10	10	
Annualized Capital Cost ($/yr)		$2,403	4% interest
PM Emission Factor (g/hr)	19	3	
HC Emission Factor (g/hr)	19	19	
NOx (tons/year)	-	-	
PM (tons/year)	0.03	0.00	
HC (tons/year)	0.03	0.03	
NOx Reduction (tons/year)		-	
PM Reduction (tons/year)		0.03	
HC Reduction (tons/year)		-	
Cost-Effectiveness PM ($/ton)		***$90,467***	

DPF Addition to Specific Engines

Fields	Value	References
Cost of diesel (per gallon)	$2.79	http://tonto.eia.doe.gov/dnav/pet/pet_pri_gnd_dcus_nus_w.htm
grams per ton	907184.14	

Supply ship Generator	300-600 HP		Assumptions and References
	Tier 0 Baseline	Tier 3 + CDPF	
PM Emission Std (g/bhp-hr)	0.98	0.08	Offroad Engine Emission Standards http://www.epa.gov/otaq/standards/nonroad/nonroadci.htm
HC Emission Std (g/bhp-hr)	0	0.15	
Average Horsepower (hp)	292	292	Permit Application
Load Factor	0.50	0.50	Variable, here assume 50% load
Activity (hr/yr)	96	96	Based on Cementing Units
Incremental Capital Cost		$ 9,000	LADCO Report
Shipping + Labor Cost			
Useful Life (years)	10	10	
Annualized Capital Cost ($/yr)		$1,110	4% interest
NOx Emission Factor (g/hr)	0	0	
PM Emission Factor (g/hr)	143	11	
HC Emission Factor (g/hr)	0	22	
PM (tons/year)	0.02	0.00	0.076530612
NOx Reduction (tons/year)		-	
PM Reduction (tons/year)		0.01	
HC Reduction (tons/year)		-	
Cost-Effectiveness PM ($/ton)		***$79,359***	

OxyCat Addition to Specific Engines

Fields	Value	References
Cost of diesel (per gallon)	$2.79	http://tonto.eia.doe.gov/dnav/pet/pet_pri_gnd_dcus_nus_w.htm
grams per ton	907184.14	

MLC Air Compressors	300-600 HP		Assumptions and References
	Tier 3 Baseline	CDPF	
PM Emission Std (g/bhp-hr)	0.15	0.08	Offroad Engine Emission Standards http://www.epa.gov/otaq/standards/nonroad/nonroadci.htm
HC Emission Std (g/bhp-hr)	0.15	0.15	
Average Horsepower (hp)	540	540	Permit Application
Load Factor	0.50	0.50	Assume 50% load
Activity (hr/yr)	1,512	1,512	Assume 24 hr/day operation for 63 days
Energy Consumption Factor (bhp-hr/gal)	19.1	19.1	
Fuel Usage (gal/yr)	42,748	42,748	
			Assume linear relationship between load and urea usage
Installation Cost		$5,000	Environ Estimate
Incremental Capital Cost		$3,798	LADCO Report
Useful Life (years)	10	10	
Annualized Capital Cost ($/yr)		$1,085	4% interest
PM Emission Factor (g/hr)	41	20	
HC Emission Factor (g/hr)	41	41	
NOx (tons/year)	-	-	
PM (tons/year)	0.07	0.03	
HC (tons/year)	0.07	0.07	
NOx Reduction (tons/year)		-	
PM Reduction (tons/year)		0.03	
HC Reduction (tons/year)		-	
Cost-Effectiveness PM ($/ton)		***$32,139***	

Supply ship Generator	300-600 HP		Assumptions and References
	Tier 0 Baseline	Tier 3 + CDPF	
PM Emission Std (g/bhp-hr)	0.98	0.08	Offroad Engine Emission Standards http://www.epa.gov/otaq/standards/nonroad/nonroadci.htm
HC Emission Std (g/bhp-hr)	0	0.15	
Average Horsepower (hp)	292	292	Permit Application
Load Factor	0.50	0.50	Variable, here assume 50% load
Activity (hr/yr)	96	96	Based on Cementing Units
Incremental Capital Cost		$ 2,000	LADCO Report
Shipping + Labor Cost		$ 5,000	Environ estimate
Useful Life (years)	10	10	
Annualized Capital Cost ($/yr)		$863	4% interest
NOx Emission Factor (g/hr)	0	0	
PM Emission Factor (g/hr)	143	11	
HC Emission Factor (g/hr)	0	22	
PM (tons/year)	0.02	0.00	0.076530612
NOx Reduction (tons/year)		-	
PM Reduction (tons/year)		0.01	
HC Reduction (tons/year)		-	

Cost-Effectiveness PM ($/ton)		***$61,723***	

Large Logging Engine	**175-300 HP**		**Assumptions and References**
	Tier 3 Baseline	**CDPF**	
PM Emission Std (g/bhp-hr)	0.15	0.08	Offroad Engine Emission Standards http://www.epa.gov/otaq/standards/nonroad/nonroadci.htm
HC Emission Std (g/bhp-hr)	0.15	0.15	
Average Horsepower (hp)	250	250	Permit Application
Load Factor	0.50	0.50	Assume 50% load
Activity (hr/yr)	1121	1,121	Assume 24 hr/day operation for 63 days
Energy Consumption Factor (bhp-hr/gal)	19.1	19.1	
Fuel Usage (gal/yr)	14,671	14,671	
			Assume linear relationship between load and urea usage
Shipping Plus Labor		$5,000	
Incremental Capital Cost		$2,000	LADCO Report
Useful Life (years)	10	10	
Annualized Capital Cost ($/yr)		$863	4% interest
PM Emission Factor (g/hr)	19	9	
HC Emission Factor (g/hr)	19	19	
NOx (tons/year)	-	-	
PM (tons/year)	0.03	0.02	
HC (tons/year)	0.03	0.03	
NOx Reduction (tons/year)		-	
PM Reduction (tons/year)		0.02	
HC Reduction (tons/year)		-	
Cost-Effectiveness PM ($/ton)		***$55,233***	

RECORD of CONVERSATION
And DOCUMENTATION OF INFORMATION from
BASF

From: Lan Ma
Sent: Monday, December 07, 2009 7:16 PM
To: 'mike.durilla@basf.com'
Subject: RE: NOx Emission Reduction Catalyst Inquiry

Dear Mike,

Thank you for calling me today and explaining to me the different SCR systems. I was asked to document our discussion for reference. Would you confirm for me the following bullet points as what we had discussed? I also have a couple more questions at the bottom and would really appreciate your time helping with the answer.

- Regardless of the control injection (hydrogen gas, HC, fuel, ammonia, others), space is needed for storage
- The HC-SCR system is relatively inefficient; NOx reduction was only about 30%-40% for an automotive engine
- One feasibility issue with SCR is the sulfur level of the fuel, since high PM in exhaust can clog on the catalyst and lower the performance of a SCR
- The right stoichiometric ratio of control injection to NOx emission is important; some engines manufacturers provide a load map to predict NOx and use the load map to adjust the rate of control injection, but the load map may not hold as the engine ages.

I did a little research on HUG Engineering products. It looks to me that they only have SCR using ammonia / urea but not using other reactants. As regard to HC-SRC, though they are not efficient, are you aware of their use in off-road / portable engines (not automotive)? The following table shows some of the engines in my case; some of them already have DPF installed for PM control. Are you familiar with any HC-SRC that could be applied to these engines for NOx control?

Make	Model	HP
Caterpillar	C-15	540
Detroit	8V71	250
Caterpillar	D343	365
Detroit	8V-71N	335
GM	3-71	147
Detroit	4-71N	128
John Deere	4024TF270	48

Again, thank you so much!

Regards,
Lan

Lan Ma* | *Associate
ENVIRON International Corp. | www.environcorp.com
773 San Marin Drive Suite 2115 | Novato, CA 94998
Tel: (+1) 415.899.0742 | Fax: (+1) 415.899.0707

E-mail: lma@environcorp.com

From: Lan Ma
Sent: Thursday, December 03, 2009 2:05 PM
To: 'terry.lomuntad@basf.com'
Subject: NOx Emission Reduction Catalyst Inquiry

Dear Terry,

My name is Lan Ma, from ENVIRON. I was referred to contact you by Thomas Bayer at Siemens regarding NOx emissions reduction catalyst technology. The catalyst I am interested in would be for portable engines aboard a ship. The goal is to reduce NOx emissions without the use of urea due to certain issues with urea such as ammonia slip and the need for large space. I am wondering what type of catalyst, if any, would fit this application. If so, are they designed only for certain engines and have they been tested?

Thanks for your help!

Sincerely,
Lan

Lan Ma* | *Associate
ENVIRON International Corp. | www.environcorp.com
773 San Marin Drive Suite 2115 | Novato, CA 94998
Tel: (+1) 415.899.0742 | Fax: (+1) 415.899.0707
E-mail: lma@environcorp.com

From: Bayer, Thomas (WT) [mailto:tom.bayer@siemens.com]
Sent: Wednesday, November 25, 2009 4:18 AM
To: Lan Ma
Cc: terry.lomuntad@basf.com
Subject: Re: NOx Emission Reduction Catalyst Inquiry

Dear Lan,
As talked about on the phone last night, for catalyst you will have to contact BASF after they had aquired Engelhard.
I have copied Terry Lomuntad from BASF who helped us out often.

Her phone number is: (732) 205-6253

I hope this works out for you and wish you a Happy Thanksgiving.

Best regards
Thomas

From: Lan Ma <lma@environcorp.com>
To: Bayer, Thomas (WT)
Sent: Tue Nov 24 20:21:30 2009
Subject: NOx Emission Reduction Catalyst Inquiry

Dear Tom,

Thank you for calling me back today and offering a reference for me. The catalyst I am interested in would be for portable engines aboard a ship. The goal is to reduce NOx emissions without the use of urea due to certain issues with urea such as ammonia slip and the need for large space. I am wondering what type of catalyst, if any, would fit this application. If so, are they designed only for certain engines and have they been tested?

Thanks again!
Lan

Lan Ma* | *Associate
ENVIRON International Corp. | www.environcorp.com
773 San Marin Drive Suite 2115 | Novato, CA 94998
Tel: (+1) 415.899.0742 | Fax: (+1) 415.899.0707
E-mail: lma@environcorp.com

RECORD of CONVERSATION
And DOCUMENTATION OF INFORMATION from
Clean Cam Technology Systems (CCTS)

From: Don Fairchild [mailto:don@cctskit.com]
Sent: Tuesday, December 08, 2009 3:38 PM
To: Lan Ma
Subject: Re: CCTS Questions

Lan;

1) Clients usealy ship the engine to us and we rebuild the engine and install the camshafts and cylinder kits at that time, we ship the engine back with aone year warranty.
2) Yes the products have been tested in cranes, gen sets, sewer pumps, mud pumps, drilling rigs, buses and don't apear to have any problems.
3) Yes, JP8 fuel does not work as intended with out further testing and development.
4) Yes, ccts works with crank case ventilation systems
5) at this time we have two ULSD test's going on and we are working on taking an engine to SWRI to see if we can get to the next level for carb approval.
6) Yes any retarding of the timeing would be removed at the time of the ccts install
7) Coupling a DPF to a CCTS equiped engine further reduce the PM out put will not adversely provided the (CFM) exhaust flow matched the engine out put.
8) the time to rebuild and install the CCTS parts in an engine will very by the engine size and condition at the time of the retro-fit An 8V71 for example will take aroung two-three weeks depending on our work load at the time the work is preformed.

I hope this helps

Regards

Don Fairchild
CCTS
Bakersfield, CA
661-391-4520 office
661-391-4525 Fax
sales@cctskit.com

P.S. If you know of any business that would like to team up with us or of any grants that may be avaliable to us to do further testing we would be grateful.

From: Don Fairchild [mailto:don@cctskit.com]
Sent: Tuesday, December 08, 2009 2:48 PM
To: Lan Ma
Subject: Re: CCTS Questions

lan;

The price for the camshafts and cylinder kits for the 8V71 is 6,135.00 I hope this helps. I am answering the other questions now.

Thank you

Don Fairchild
Clen Cam Technology Systems
Bakersfield, CA
661-391-4520 Office
661-391-4525 fax
sales@cctskit.com

From: Lan Ma
Sent: Tuesday, December 08, 2009 11:09 AM
To: 'don@cctskit.com'
Subject: RE: CCTS Questions

Hi Don,

Apologies! I realized I entered wrong cost estimate in the table below. They should be $6,100 and $7,500 for the 8V71 and 8V71N engines, respectively, as obtained from CARB documentation. Please confirm.

Thanks,
Lan

Lan Ma | Associate
ENVIRON International Corp. | www.environcorp.com
773 San Marin Drive Suite 2115 | Novato, CA 94998
Tel: (+1) 415.899.0742 | Fax: (+1) 415.899.0707
E-mail: lma@environcorp.com

From: Lan Ma
Sent: Tuesday, December 08, 2009 10:44 AM
To: 'don@cctskit.com'
Subject: FW: CCTS Questions

Hi Don,

Will you be able to get back to me regarding the below references sometime today? I was asked to submit the document and would really appreciate your confirmation on some of points we discussed. Also, to do my cost-effectiveness analysis, I used the CCTS cost numbers of from the ARB website. I believe these costs (see below) reflect the engine rebuild and capital cost of the CCTS kit. Are there other costs associated with this product? How about shipping? And do you have an estimate of how long this process (from shipping to installation to shipping back) will take? Thank you so much for your help. -- Lan

Make	Model	HP	Cost
Detroit	8V71	250	$61,000
Detroit	8V-71N	335	$75,000

Lan Ma | Associate
ENVIRON International Corp. | www.environcorp.com

773 San Marin Drive Suite 2115 | Novato, CA 94998
Tel: (+1) 415.899.0742 | Fax: (+1) 415.899.0707
E-mail: lma@environcorp.com

From: Lan Ma
Sent: Thursday, December 03, 2009 3:20 PM
To: 'don@cctskit.com'
Subject: CCTS Questions

Hello Don,

This is Lan from ENVIRON. We have spoken over the phone a couple of times regarding CCTS products. Your explanations were really helpful and so thank you! I have written up my findings but would like to have written references; here I am addressing some of the details we have discussed, would you confirm for me that they are correct and clarify for me if any of these statements seem ambiguous. Thank you very much for your help!

1) Clients typically ship the engines to you to install the Cam Shaft Cylinder Reengineering Kit or they ship the engine and you ship the Kit to a local shop for installation on site.
2) The CCTS product has been tested on engines working under varying loads and there does not appear to have any problems.
3) The CCTS product has been tested on engine working under cold climate conditions. It is found that when using JP8 fuel, there were combustion difficulties, but it worked fine with using regular diesel fuel.
4) The CCTS product works fine with a crankcase ventilation system on the engine.
5) The CCTS product is being tested to use ULSD.
6) If other retrofits such has ITR (Injection Timing Retard) were applied to an engine previously, they would need to be removed before installing the CCTS kit.
7) Coupling a DPF (Diesel Particular Filter) with the CCTS kit to further reduce PM at the exhaust is theoretically possible, though not commonly done. The exhaust temperature is not lowered by the CCTS kit (although it might be low at engine start but temperature raises when engine starts running); therefore DPF performance is not affected (temperature requirement wise).
8) Additionally, I would also like to know how long does installation normally take – just to have a rough idea on timeframe.

Thanks so much again, Don!

Regards,
Lan

Lan Ma | Associate
ENVIRON International Corp. | www.environcorp.com
773 San Marin Drive Suite 2115 | Novato, CA 94998
Tel: (+1) 415.899.0742 | Fax: (+1) 415.899.0707
E-mail: lma@environcorp.com

From: Lan Ma
Sent: Thursday, November 19, 2009 1:50 PM
To: 'don@cctskit.com'
Subject: RE: CCTS Questions

Hi Don,

Apologies for the hassle, I have one more question: If the engine is operated at varying loads and/or under cold climate conditions, would that affect the performance or levels of emission reductions of the CCTS kit?

I can be reached via phone (415) 899-0742 or e-mail. Again, I really appreciate your time to help.

Regards,
Lan

Lan Ma* | *Associate
ENVIRON International Corp. | www.environcorp.com
773 San Marin Drive Suite 2115 | Novato, CA 94998
Tel: (+1) 415.899.0742 | Fax: (+1) 415.899.0707
E-mail: lma@environcorp.com

From: Lan Ma
Sent: Thursday, November 19, 2009 12:48 PM
To: 'don@cctskit.com'
Subject: CCTS Questions

Hello Don,

This is Lan from ENVIRON. We have spoken over the phone last week regarding CCTS on marine applications. I have a couple more general questions regarding the product and would really appreciate your time in answering my request.

- Since this is an engine modification, do clients typically ship the engines to you to install the Cam Shaft Cylinder Reengineering Kit or do you have engineers who also travel out to install the kit? The engines of interest in my case are portable engines for marine purposes; how is the installation done typically for this case?
- Last time we talked, you mentioned that the ARB has done a study on CCTS on a Navy ship. I found a description of this study here (http://www.arb.ca.gov/regact/2007/chc07/appe.pdf); is this what you were referring to?
- Can the Cam Shaft Cylinder Reengineering Kit still be applied if an engine has already installed a crankcase ventilation system or other types retrofit (e.g. Injection Time Retard, Exhaust Gas Recirculation, etc…)? Do you remove the other systems before installing the CCTS Kit? I also noticed in the Navy ship study that a DPF was installed in addition to the CCTS kit; are there other types of retrofits that can be used together with the CCTS kit to further reduce emissions?

Thank you very much for your help!

Sincerely,
Lan Ma

Lan Ma* | *Associate
ENVIRON International Corp. | www.environcorp.com
773 San Marin Drive Suite 2115 | Novato, CA 94998
Tel: (+1) 415.899.0742 | Fax: (+1) 415.899.0707

E-mail: lma@environcorp.com

RECORD of CONVERSATION
And DOCUMENTATION OF INFORMATION from
Exhaust Gas Recirculation and Injection Timing Retard

From: Todd Loughney [mailto:TLoughney@Smithppi.com]
Sent: Tuesday, December 08, 2009 1:55 PM
To: Ron Friesen
Subject: Re: Engine Retrofits and Replacements

Ron,

I can confirm that we have spoken on these topics as you have outlined in the e-mail below, and I concur with your statements.

I have forwarded this information to my sales department for further price quotation.

----- Original Message -----
From: Ron Friesen
To: tloughney@smithppi.com
Sent: Tuesday, December 08, 2009 1:08 PM
Subject: FW: Engine Retrofits and Replacements

Todd:

We are providing our analysis to the client today. Any chance you can confirm by email that the numbers below are what you provided to me? Thanks.

Ron

Ronald A. Friesen, P.E., QEP | Manager
ENVIRON International Corporation
9080 Double Diamond Parkway, Suite E
Reno, Nevada 89521
V: 775.853.4498| F: 775.828.4529 |
E: rfriesen@environcorp.com|

From: Ron Friesen
Sent: Monday, December 07, 2009 11:35 AM
To: 'tloughney@smithppi.com'
Subject: Engine Retrofits and Replacements

Todd:

Thanks for the information you provided in our conversation today. To summarize our conversation:

We have 6 older engines being used for various applications on a Drill Ship. We are evaluating BACT for the following engines:

Application	Manufacturer	Model	Size		MMBtu/hr
HPU Engine	Detroit	8V71	250	hp	2
HPU Engine	Detroit	8V71	250	hp	2
Cementing Unit	Detroit	8V-71N	335	hp	2.6
Cementing Unit	Detroit	8V-71N	335	hp	2.6
Port Deck Crane	Caterpillar	D343	365	hp	2.8
Starbd Deck Crane	Caterpillar	D343	365	hp	2.8

In general the engines loads are 50 to 100% and operate only about 65 days per year. We have two questions:

1) Can the Detroit engines be retrofitted with EGR or ITR (Injection Timing Retard)? You indicated that these engines are older two-stroke engines and that it is not possible to retrofit these engines with either EGR or ITR. This is primarily a feasibility issue since the two-stoke engine vents through the valves and inhales through the block making EGR useless. Also you indicated that the timing retard would cause the engine to loose power and not reduce emissions.
2) What are the replacement costs for all 6 engines? You indicated that you could give us a cost estimate to purchase and install these engines with replacement engines that are Tier 3 level engines. In additional to capital, installation, and maintenance costs, we would also be interested to know what your costs would be to travel to Alaska to actually install the engines while the ship is in dry-dock.

If you could confirm our conversation or offer any additional comments on item 1 above, I would appreciate it very much. Also, If you can provide us with answers to question 2) above, I would appreciate it very much as well. Let me know if you have any questions. Due to snow conditions today, I am working at my home office and can be reached at 775.826.0929.

Ron

Ronald A. Friesen, P.E., QEP | Manager
ENVIRON International Corporation
9080 Double Diamond Parkway, Suite E
Reno, Nevada 89521
V: 775.853.4498| F: 775.828.4529 |
E: rfriesen@environcorp.com|

RECORD of CONVERSATION
And DOCUMENTATION OF INFORMATION from
Cleaire Advanced Emission Controls, LLC

From: Tom Swenson [mailto:tom.swenson@cleaire.com]
Sent: Wednesday, December 02, 2009 7:18 PM
To: Ron Friesen
Subject: RE: Follow Up

Ron,
That captures my comments well.
Tom

Tom Swenson, P.E.
Director - Market Development
Cleaire Advanced Emission Controls, LLC
14333 Wicks Blvd.
San Leandro, California 94577-6719
Office: 916.689.0248
Fax: 510.895.5670
www.cleaire.com

This message and any files or text attached to it are intended solely for the use of the intended recipient and may contain information that is confidential. If you feel that you have received this message in error, you must not read, copy, use or disclose this communication and its attached files. Please notify the sender of the error by replying to this message, and then delete all copies of it from your system.

From: Ron Friesen [mailto:rfriesen@environcorp.com]
Sent: Wednesday, December 02, 2009 6:01 PM
To: Tom Swenson
Subject: Follow Up
Importance: High

Tom:

I appreciated our recent conversation regarding the use of the Cleaire Longview product for a drill ship application in an artic climate. I have been asked to document our conversation for reference purposes. Based on our conversation, you indicated that the system is not amenable to long periods of idle but rather like high loads. I understood you to say that while there are no technical reasons the technology would not work, you felt that the technology would be more of a demonstration project for this application. You further indicated that an installation would require an increase in the tail pipe run to approximately a 36 to 48 inch exhaust. This tail pipe run would be subject to cooling which would further reduce the effectiveness of the system. You also pointed out that in addition to the lack of available space there would be a need for technical support during the demonstration of this technology and thus would not recommend the product as a commercial product for this application. I would appreciate it if you could confirm our conversation. If you have any comments or corrections to my summary, please let me know or give me a call. Thanks again.

Ron

Ronald A. Friesen, P.E., QEP | Manager
ENVIRON International Corporation
9080 Double Diamond Parkway, Suite E
Reno, Nevada 89521
V: 775.853.4498| F: 775.828.4529 |
E: rfriesen@environcorp.com|

RECORD of CONVERSATION
And DOCUMENTATION OF INFORMATION from
Engine Replacement Costs

From: Ron Friesen
Sent: Monday, December 07, 2009 2:22 PM
To: 'John Delahunt'
Subject: RE: Compliant engine options

John:

Thank you for the information regarding Power Products cost estimates for replacement engines identified below:

250 hp engine: Capital cost=$23,000 to $25,000
Installation =$10,000 to $15,000
Other = Travel + Room and Board to Barrow, AK

335 hp engine: Capital cost=$30,000 to $32,000
Installation =$15,000
Other=Travel + Room and Board to Barrow, AK

365 hp engine: Capital Cost$45,000 to 50,000
Installation =$15,000
Other = Travel, + Room and Board to Barrow, AK

It is our understanding that these are estimates for repowering the engines as opposed to replacement of the entire units. All units are in stock and would be manufactured by DDC but are actually Mtu/Mercedes Bends Industrial Engines. According to Todd, you would need about a month to schedule such installations. Also, you would need to Alaska once the ship is in dock and provide detailed cost estimates.

RECORD of CONVERSATION
And DOCUMENTATION OF INFORMATION from
Johnson Matthey

From: Jeremy Harris [mailto:harrisje@jmusa.com]
Sent: Thursday, December 03, 2009 1:07 PM
To: Ron Friesen
Cc: Richard Rosowski
Subject: RE: Status of Evaluation

Ron,

I made a few comments below. Everything else is as we discussed.

Jeremy
>>> "Ron Friesen" <rfriesen@environcorp.com> 12/2/2009 8:21 PM >>>

Jeremy:
The information you provided was very useful for our analysis of BACT for the engines in question. I have been asked to document what I received from you, which I can do based on your note below. However, as you recall, I called you back and asked a few more questions for which you provided answers verbally. Can you confirm that you provided the following additional information?

1. Cost of urea: $2.00/gallon in large quantities or $3.00/gallon for what we have in this application. You usually purchase the urea in 700 gallon quantities **This one is a little off. This is what you would have to purchase for this project due to the tank only being 1000 gallons and you don't want to let it run dry. In large stationary applications we usually try to steer the customer toward a 6,000 gallon tank so they can buy a truck load of urea, which is 5,000 gallons.**
2. A 1000 gallon tank would last about 30 days at full load (we would need to calculate at half load) **The 32.5% urea flow rate requirement is 1.1 gal/hr. A 1000 gallon tank will allow for 900 hours of operation or 37 days at full load, but since you aren't going to let it run dry you are going to need to fill the urea tank about every 30 days. The engine exhaust flow is approximately proportional to load so the urea flow rate requirement will be about 0.55 gal/hr at half load.**
3. Efficiency of system quoted is 90%
4. Life equipment can be assumed to be 10 or 15 years
5. Life of catalyst is 5 to 7 years. Replacement cost of Catalyst is about $8,000.
6. For maintenance costs (in addition to urea costs) you can amortize the equipment over the life of the project. It should be about $5,000 to $10,000 per year.
7. Use of equipment in artic temperatures. Ideally would want to place in control room but out on the deck it would be best to insulate and have heat tracers **(tracing)**.

We used the information you provided below plus the additional information in this note to calculate the cost-effectiveness of the SCR system. If you have any questions or need to correct anything above, please let me know or give me a call. Thanks again for your help.
Ron

Ronald A. Friesen, P.E., QEP | Manager
ENVIRON International Corporation
9080 Double Diamond Parkway, Suite E

Reno, Nevada 89521
V: 775.853.4498| F: 775.828.4529 |
E: rfriesen@environcorp.com|

From: Jeremy Harris [mailto:harrisje@jmusa.com]
Sent: Tuesday, November 24, 2009 7:35 AM
To: Ron Friesen
Cc: Richard Rosowski
Subject: Re: Status of Evaluation

Ron,
Sorry for the delayed response.
We would estimate the budget cost for equipment for this project would be $85,000 and the budget cost for installation would be $110,000.
Our equipment budget price includes:
Catalyst Housing- 1010 housing made of 304SS (drawing attached)
Extruded Ceramic Catalyst
Mixing Duct- 12" diameter x 7 feet long- 304 SS construction
12" Expansion Joint
1000 gallon polyethylene, double wall storage tank- urea requirement is 1.1 gal/hour at full load
Control System- Drawing of standard design is attached (we could make smaller if required)
Installation is just a budget number based on experience. The exact number can be provided with more details about the project.
Please let us know if we can be of any further assistance.
Best regards,
Jeremy Harris
for Johnson Matthey
Phone: 484-320-2122
Cell: 610-636-8318
Fax: 484-320-2152

>>> "Ron Friesen" <rfriesen@environcorp.com> 11/19/2009 6:45 PM >>>
Jeremy:
Just wanted to check to see how it is going on the SCR evaluation. Do you expect to get me something today or should I look for it tomorrow?
Ron

Ronald A. Friesen, P.E., QEP | Manager
ENVIRON International Corporation
9080 Double Diamond Parkway, Suite E
Reno, Nevada 89521
V: 775.853.4498| F: 775.828.4529 |
E: rfriesen@environcorp.com|

REVISIONS			
REV.	DESCRIPTIONS	BY	APPVD.

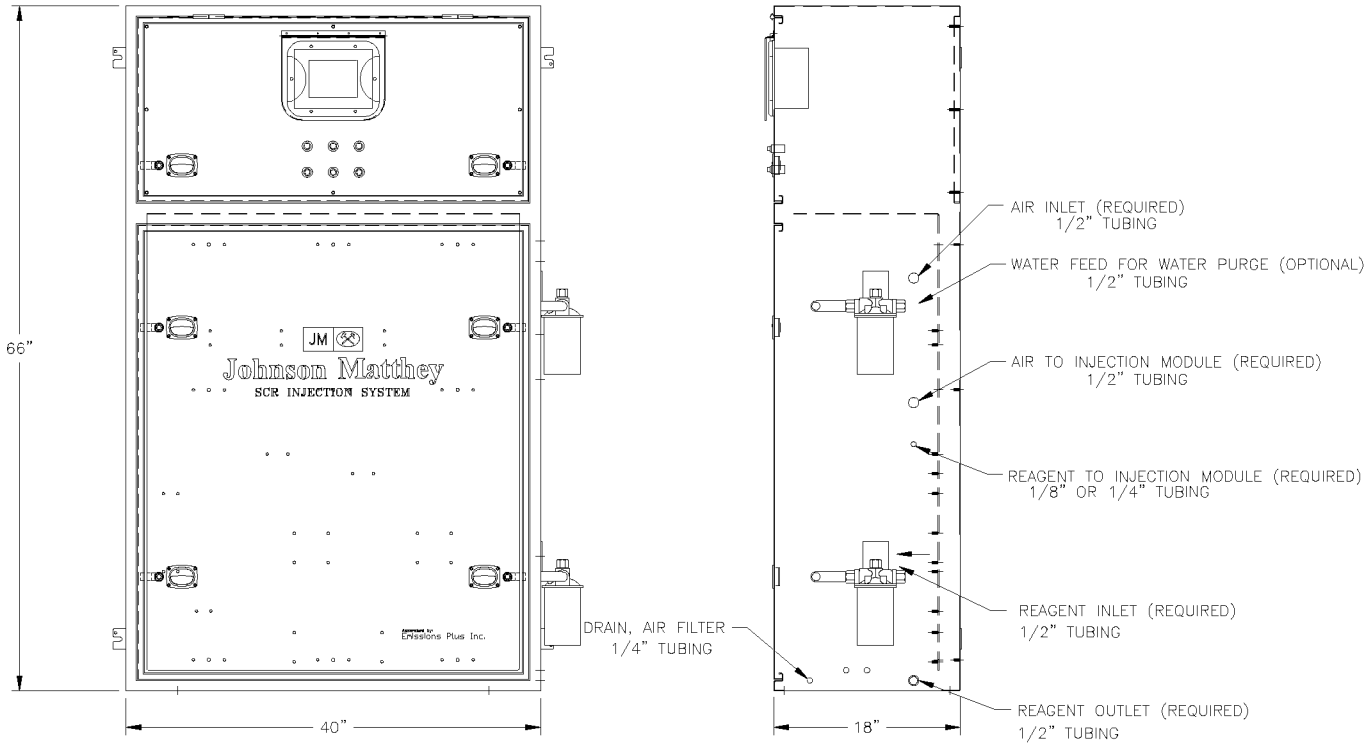

WEIGHT 600 #

DIMENSION TOLERANCES (UNLESS OTHERWISE SPECIFIED)		
	IN	[mm]
X	± 0.005 IN/IN	[±0.005 mm/mm]
X.X	± 0.03	[1]
X.XX	± 0.015	[0.4]
X.XXX	± 0.005	[0.1]
FRACTION ± 1/32" PER 15 IN		
ANGLE ± 2°		
REMOVE ALL SHARP EDGES AND BURRS		

SCR
INJECTION SYSTEM

STANDARD ENCLOSURE

JM Johnson Matthey
WAYNE, PA
HDD\SSEC ENGINEERING

DESIGN		ENGR.	PRO. ENGR.	ENGR. MGR.
DRAWN SAB	CHECKED			
DATE: 10-2-03	SHEET NO. 1 OF 1	DRAWING NUMBER		REV.
SCALE 1/8		SCR-C-7950		0

PROPERTY OF JOHNSON MATTHEY, INC. TO BE RETURNED UPON REQUEST AND USED ONLY IN REFERENCE TO CONTRACTS OR PROPOSALS OF THIS CORPORATION. UNAUTHORIZED REPRODUCTION IS PROHIBITED.

DIESEL GENERATOR SET

CATERPILLAR®

Image shown may not reflect actual package.

STANDBY
450 ekW 563 kVA
60 Hz 1800 rpm 480 Volts

Caterpillar is leading the power generation marketplace with Power Solutions engineered to deliver unmatched flexibility, expandability, reliability, and cost-effectiveness.

FEATURES

FUEL/EMISSIONS STRATEGY
- EPA Tier 3 and Low Emissions

DESIGN CRITERIA
- The generator set accepts 100% rated load in one step per NFPA 110 and meets ISO 8528-5 transient response.

UL 2200
- UL 2200 listed packages available. Certain restrictions may apply. Consult with your Caterpillar Dealer.

FULL RANGE OF ATTACHMENTS
- Wide range of bolt-on system expansion attachments, factory designed and tested
- Flexible packaging options for easy and cost effective installation

SINGLE-SOURCE SUPPLIER
- Fully prototype tested with certified torsional vibration analysis available

WORLDWIDE PRODUCT SUPPORT
- Caterpillar® dealers provide extensive post sale support including maintenance and repair agreements
- Caterpillar dealers have over 1,600 dealer branch stores operating in 200 countries
- The Cat® S•O•S℠ program cost effectively detects internal engine component condition, even the presence of unwanted fluids and combustion by-products

CAT® C15 ATAAC DIESEL ENGINE
- Utilizes ACERT™ Technology
- Reliable, rugged, durable design
- Field-proven in thousands of applications worldwide
- Four-stroke diesel engine combines consistent performance and excellent fuel economy with minimum weight
- Electronic engine control

CAT GENERATOR
- Matched to the performance and output characteristics of Caterpillar engines
- Load adjustment module provides engine relief upon load impact and improves load acceptance and recovery time
- UL 1446 Recognized Class H insulation

CAT EMCP 3 SERIES CONTROL PANELS
- Simple user friendly interface and navigation
- Scalable system to meet a wide range of customer needs
- Integrated Control System and Communications Gateway

FACTORY INSTALLED STANDARD & OPTIONAL EQUIPMENT

System	Standard	Optional
Air Inlet	• Light Duty Air filter	• Canister Style Air Cleaners • Air Cleaner - single stage • Dual element • Heavy duty
Cooling	• Radiator package mounted(50ºC) • Coolant drain line with valve terminated at edge of base • Fan and belt guards • Coolant level sight gauge • Caterpillar Extended Life Coolant	• Radiator removal • Radiator duct flange & guard
Exhaust	• Dry exhaust manifold • Flanged faced outlets • Stainless Steel Flex with split-cuff connection	• Mufflers • Manifold & Turbocharger guards • Elbows
Fuel	• Primary fuel filter with integral water separator • Secondary fuel filters • Fuel priming pump • Engine fuel transfer pump • Flex fuel lines • Fuel cooler* *Not included with packages without radiators	• Integral UL listed fuel tank base • Manual transfer pump • Fuel level switch
Generator	• Class H insulation • R448 voltage regulator with load adjustment module • IP23 Protection	• CDVR with KVAR/PF control • Oversize and premium generators • Bearing/Stator temperature detection (premium generator) • 3 phase sensing • Anti-condensation space heaters • Cable access box • Reactive droop
Power Termination	• Power Terminator Strips Mounted inside Power Center • Segregated low voltage wiring panel	• Circuit breakers, UL listed, 3 pole • Circuit breakers, IEC compliant, 3 pole • Circuit breaker Shunt trip • Circuit breaker Auxillary contact • Top & bottom power cable entry • Floor standing UL breakers
Governor	• ADEM™A4	• Load share module
Control Panels	• EMCP 3.1 (rear mounted) • Speed adjust • Emergency stop pushbutton • Voltage adjust	• EMCP 3.2 & EMCP 3.3 (can be RH mounted) • Local annuniciator modules (NFPA 99/110) • Remote annunicator modules (NFPA 99/110) • Discrete I/O module
Lube	• Lubricating oil and filter • Oil drain line with valves • Fumes disposal • Gear type lube oil pump	• Manual sump pump
Starting/Charging	• 24 volt starting motor • Battery with rack and cables (dry) • 45 amp charging alternator	• Jacket water heater with shut off valves • Block heater • Ether starting aids • Battery disconnect switch • Battery chargers (5 & 10 amp) • Oversized batteries
General	• Paint - Caterpillar yellow except rails and radiators gloss black • Flywheel and flywheel housing - SAE No.1	

STANDBY 450 ekW 563 kVA

60 Hz 1800 rpm 480 Volts

CATERPILLAR®

SPECIFICATIONS

CAT GENERATOR

Frame size..... LC6114D
Excitation..... Self Excitation
Pitch.....0.6667
Number of poles.....4
Number of bearings..... Single Bearing
Number of Leads..... 12
Insulation..... UL 1446 Recognized Class H with tropicalization and antiabrasion
- Consult your Caterpillar dealer for available voltages
IP Rating.....IP23
Alignment..... Pilot Shaft
Overspeed capability..... 125% of rated
Wave form Deviation (Line to Line)..... 2%
Voltage regulator..... Single phase sensing with selectible volts/Hz
Voltage regulation.....Less than +/- 1/2% (steady state)
Less than +/- ½% (w/ 3% speed change)
Telephone influence factor.....Less than 50
Harmonic Distortion.....Less than 5%

CAT DIESEL ENGINE

C15 ATAAC, L-6, 4-stroke water-cooled diesel
Bore..... 137.20 mm (5.4 in)
Stroke..... 171.40 mm (6.75 in)
Displacement.....15.20 L (927.56 in^3)
Compression Ratio..... 16.1:1
Aspiration..... ATAAC
Fuel System.....MEUI
Governor Type..... Caterpillar ADEM control system

CAT EMCP 3 CONTROL PANELS

- EMCP 3.1 (Standard)
- EMCP 3.2 / EMCP 3.3 (Option)
- Single location customer connector point
- True RMS metering, 3-phase
- Controls
  - Run / Auto / Stop control
  - Speed Adjust
  - Voltage Adjust
  - Emergency Stop Pushbutton
  - Engine cycle crank
- Digital Indication for:
  - RPM
  - Operating hours
  - Oil Pressure
  - Coolant temperature
  - System DC volts
  - L-L volts, L-N volts, phase amps, Hz
  - ekW, kVA, kVAR, kW-hr, %kW, PF (EMCP 3.2 / 3.3)
- Shutdowns with common indicating light for:
  - Low oil pressure
  - High coolant temperature
  - Low coolant level
  - Overspeed
  - Emergency stop
  - Failure to start (overcrank)
- Programmable protective relaying functions: (EMCP 3.2 & 3.3)
  - Under and over voltage
  - Under and over frequency
  - Overcurrent (time and inverse time)
  - Reverse power (EMCP 3.3)
- MODBUS isolated data link, RS-485 half-duplex (EMCP 3.2 & 3.3)
- Options
  - Vandal door
  - Local annunciator module
  - Remote annunciator module
  - Input / Output module
  - RTD / Thermocouple Modules
  - Monitoring software

TECHNICAL DATA

Open Generator Set - - 1800 rpm/60 Hz/480 Volts	DM8153	
Tier 3 and Low Emissions		
Generator Set Package Performance		
Genset Power rating @ 0.8 pf	562.5 kVA	
Genset Power rating with fan	450 ekW	
Fuel Consumption		
100% load with fan	132.2 L/hr	34.9 Gal/hr
75% load with fan	106.4 L/hr	28.1 Gal/hr
50% load with fan	79.3 L/hr	20.9 Gal/hr
Cooling System[1]		
Air flow restriction (system)	0.12 kPa	0.48 in. water
Air flow (max @ rated speed for radiator arrangement)	720 m^3/min	25427 cfm
Engine Coolant capacity with radiator/exp. tank	57.8 L	15.3 gal
Engine coolant capacity	20.8 L	5.5 gal
Radiator coolant capacity	37.0 L	9.8 gal
Inlet Air		
Combustion air inlet flow rate	41.5 m^3/min	1465.6 cfm
Exhaust System		
Exhaust stack gas temperature	492.0 ° C	917.6 ° F
Exhaust gas flow rate	111.9 m^3/min	3951.7 cfm
Exhaust flange size (internal diameter)	152.4 mm	6.0 in
Exhaust system backpressure (maximum allowable)	6.8 kPa	27.3 in. water
Heat Rejection		
Heat rejection to coolant (total)	178 kW	10123 Btu/min
Heat rejection to exhaust (total)	485 kW	27582 Btu/min
Heat rejection to atmosphere from engine	103 kW	5858 Btu/min
Heat rejection to atmosphere from generator	29.2 kW	1660.6 Btu/min
Alternator[2]		
Motor starting capability @ 30% voltage dip	1089 skVA	
Frame	LC6114D	
Temperature Rise	130 ° C	234 ° F
Emissions (Nominal)[3]		
NOx g/hp-hr	3.7 g/hp-hr	
CO g/hp-hr	.26 g/hp-hr	
HC g/hp-hr	.03 g/hp-hr	
PM g/hp-hr	.025 g/hp-hr	

[1] For ambient and altitude capabilities consult your Caterpillar dealer. Air flow restriction (system) is added to existing restriction from factory.
[2] Generator temperature rise is based on a 40° C (104° F) ambient per NEMA MG1-32.
[3] Emissions data measurement procedures are consistent with those described in EPA CFR 40 Part 89, Subpart D & E and ISO8178-1 for measuring HC, CO, PM, NOx. Data shown is based on steady state operating conditions of 77°F, 28.42 in HG and number 2 diesel fuel with 35° API and LHV of 18,390 btu/lb. The nominal emissions data shown is subject to instrumentation, measurement, facility and engine to engine variations. Emissions data is based on 100% load and thus cannot be used to compare to EPA regulations which use values based on a weighted cycle.

RATING DEFINITIONS AND CONDITIONS

Meets or Exceeds International Specifications: AS1359, CSA, IEC60034-1, ISO3046, ISO8528, NEMA MG 1-22, NEMA MG 1-33, UL508A, 72/23/EEC, 98/37/EC, 2004/108/EC

Standby - Output available with varying load for the duration of the interruption of the normal source power. Average power output is 70% of the standby power rating. Typical operation is 200 hours per year, with maximum expected usage of 500 hours per year. Standby power in accordance with ISO8528. Fuel stop power in accordance with ISO3046. Standby ambients shown indicate ambient temperature at 100% load which results in a coolant top tank temperature just below the shutdown temperature.

Ratings are based on SAE J1349 standard conditions. These ratings also apply at ISO3046 standard conditions.

Fuel rates are based on fuel oil of 35° API [16° C (60° F)] gravity having an LHV of 42 780 kJ/kg (18,390 Btu/lb) when used at 29° C (85° F) and weighing 838.9 g/liter (7.001 lbs/U.S. gal.). Additional ratings may be available for specific customer requirements, contact your Caterpillar representative for details. For information regarding Low Sulfur fuel and Biodiesel capability, please consult your Caterpillar dealer.

DIMENSIONS

Package Dimensions		
Length	**3775.1 mm**	**148.63 in**
Width	**1110.0 mm**	**43.7 in**
Height	**2091.0 mm**	**82.32 in**
Weight	**3753 kg**	**8,274 lb**

NOTE: For reference only - do not use for installation design. Please contact your local dealer for exact weight and dimensions. (General Dimension Drawing #2781050).

Performance No.: DM8153

Feature Code: C15DE6Z

Gen. Arr. Number: 2351207

Source: U.S. Sourced

May 04 2009 14167261

www.CAT-ElectricPower.com

© 2009 Caterpillar
All rights reserved.

Materials and specifications are subject to change without notice. The International System of Units (SI) is used in this publication.

CAT, CATERPILLAR, SAFETY.CAT.COM their respective logos, "Caterpillar Yellow," and the POWER EDGE trade dress, as well as corporate and product identity used herein, are trademarks of Caterpillar and may not be used without permission.

REVISIONS			
REV.	DESCRIPTIONS	BY	APPVD.

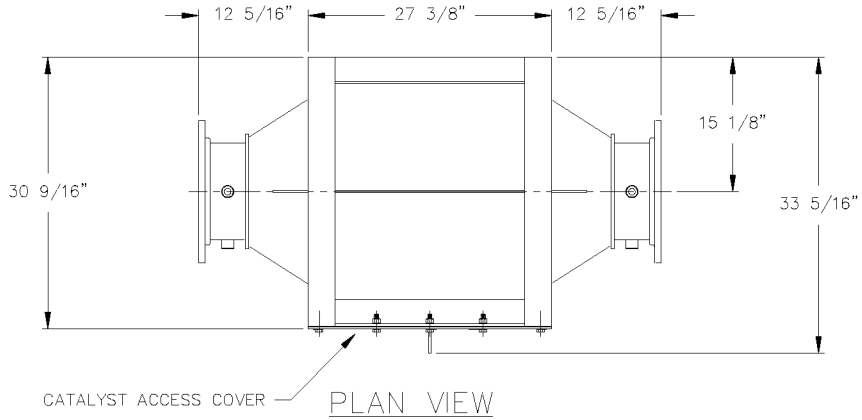

PLAN VIEW

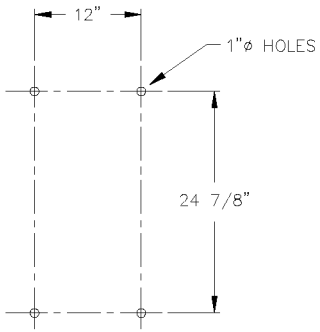

BASE BOLT PATTERN
(IN SUPPORT STEEL)

NOTES:

1. MATERIAL: U.N.O. 304 S.S. PREFERRED AS LISTED
   PLATE: ST. STL. 304 PER ASTM A240 GR 304
   ANGLES: ST. STL. 304 PER ASTM A276
   TUBING (SQUARE): ST. STL. 304
   FITTINGS: ST. STL. 304 PER ASTM A403 GR WP 304
   BOLTS: ST. STL. 304 PER ASTM A193 GR B8
   NUTS: CAR. STL. PER ASTM A194 GR 2H
   FLANGE: ST. STL. PER ASTM A105
   GASKET: VERMICULITE COATED FIBERGLASS TAPE.

2. APPROX. WEIGHT:
   EMPTY: 625 LBS.
   W/ONE LAYER CATALYST: 745 LBS.
   W/TWO LAYERS CATALYST: 865 LBS.

3. (NF) INDICATES NOT FURNISHED BY JOHNSON MATTHEY.

4. DESIGN TEMPERATURE: 1250°F MAX.
   DESIGN PRESSURE 14" W.C.

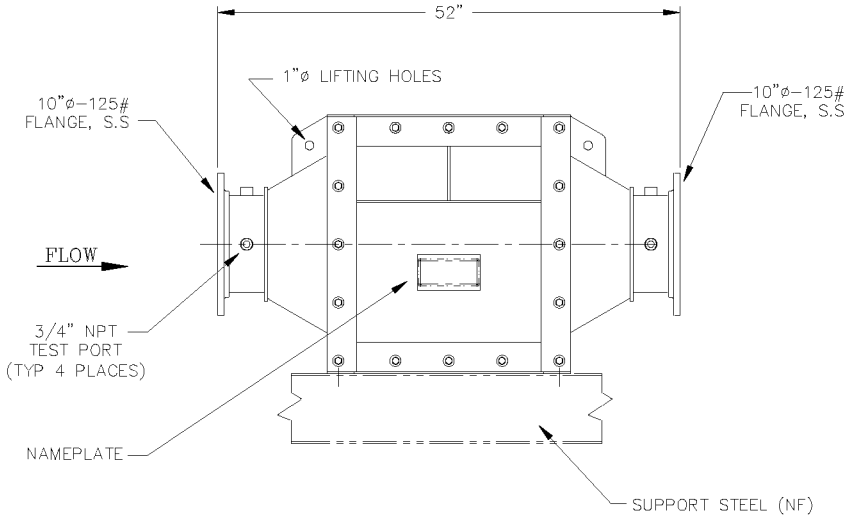

ELEVATION VIEW

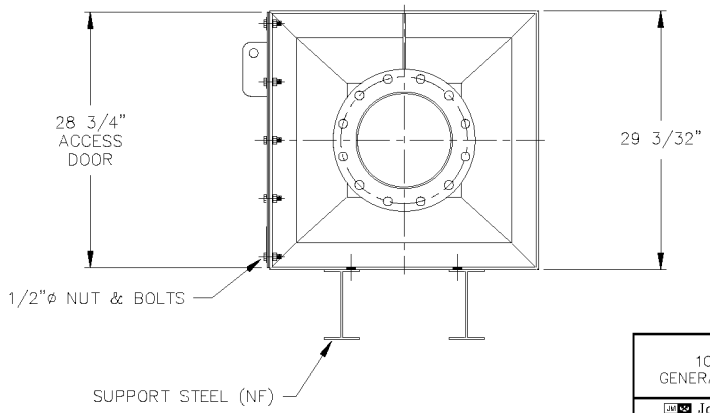

SIDE VIEW

DUALOX
1010SS-10-4
GENERAL ARRANGMENT

Johnson Matthey
WAYNE, PA
HOD\SSEC ENGINEERING

DESIGN		ENGR.	PRO. ENGR.	ENGR. MGR.
DRAWN MEC	CHECKED			
DATE: 8/22/01	SHEET NO. 1 OF 1	DRAWING NUMBER		REV.
SCALE 1:8		SCR-D-6910		0

PROPERTY OF JOHNSON MATTHEY, INC. TO BE RETURNED UPON REQUEST AND USED ONLY IN REFERENCE TO CONTRACTS OR PROPOSALS OF THIS CORPORATION. UNAUTHORIZED REPRODUCTION IS PROHIBITED

ATTACHMENT C

Supplemental BACT Information – Use of Alternative Drill Vessel

MEMORANDUM

December 9. 2009

Absence of Justification for Source Redefinition in BACT Analysis For Shell Chukchi Sea Air Permit

Introduction

Commenters on the proposed permit suggest that, in analyzing BACT for the Generator Diesel IC Engines and the smaller Diesel IC Engines on the Discoverer, Shell must consider in its Step 1 analysis the alternative of "repowering," i.e., replacing some or all of those engines with Tier 3 engines. *See* Comments of AWEC et al. at 18.[1] In addition, Commenters assert that:

> The fact that Shell has elected to pursue its operations using an old drill ship – rather than incurring the cost of utilizing or constructing a new one – cannot result in the automatic conclusion that retrofitting or replacing certain engines as part of the application of BACT is not economical or technologically feasible. This is not defensible without at least a discussion of the costs associated with using the Discoverer versus a newer or newly constructed drill ship and/or engines as compared to the costs of retrofitting or updating engines on the Discoverer.

Id. at 17.

However, in step 4 of the BACT process, the cost-effectiveness of replacing engines on the Discoverer with newer units must be analyzed under the same BACT methodology that applies to all control technologies. The relevant measure is how much it would cost to achieve a given reduction in emissions from the source, as that source is defined by the PSD permit applicant.

Discussion

Even if it were somehow possible to compare those emissions-reduction costs with the costs associated with using a "newer or newly-constructed drill ship," the latter cost is not relevant to the Step 4 analysis to determine BACT. This is because Shell has properly defined the OCS source for which it seeks a permit as

[1] In fact, the Discoverer's main generator engines and several of its other smaller engines are already Tier 3 engines.

the Discoverer, a specific drillship with specific characteristics. The Clean Air Act would not require consideration of using a different drillship as potential BACT at Step 1. Using another drillship for the proposed exploration program is not a candidate control technology under EPA's BACT guidance or under relevant legal rulings. Commenters' contention that the costs of a different drillship are relevant to the cost-effectiveness of candidate control technologies – e.g., engine replacement on the Discoverer – would be tantamount to requiring Shell to fundamentally redesign the source. That would be contrary to strong EPA policies allowing the permit applicant to define the source to which a BACT analysis is then applied

The EAB has recently reiterated that, in determining what BACT is for a source, EPA does not generally require a source to change its basic design. *In re Desert Rock Energy Company, LLC,* PSD Appeal Nos. 08-03 et al., September 24, 2009, at 59 (*citing In re Knauf Fiber Glass GMBH,* 8 E.A.D. 121, 136 (EAB 1999)). The EAB noted that: "'Historically, EPA has not considered the BACT requirement as a means to redefine the design of the source when considering available control alternatives'." *Id.* at 59-60 (*quoting* NSR Manual at B.13-.14).

Certainly, Region 10 had broad discretion not to require Shell to evaluate other drillships as potential control technologies at step 1 of the BACT process. It is "clear that the permitting authority is entitled to wide latitude in how broad a BACT analysis it wishes to conduct in this regard." *In re Hawaiian Commercial & Sugar Co.* 4 E.A.D. 95, 100 (EAB 1992); *see also Sierra Club v. Prairie State* (7th Cir. 2007). EPA's brief to the Board in *Prairie State* explained that the policy "reflects the Agency's longstanding judgment that there should be limits on the degree to which permitting authorities can dictate the design and scope of a proposed facility through BACT analysis." *See Prairie State* at 24. The touchstone of EPA's approach to BACT is a "policy against redefining the basic design of the source in the BACT analysis." *Id.*

As the Board and the Seventh Circuit affirmed in the *Prairie State* case, it is clear that BACT does not require that a source be "redesigned from the ground up." *See Sierra Club v. U.S. EPA*, 499 F.3d 653 (7th Cir. 2007) (explaining that "EPA's position is that 'best available control technology' does not include redesigning the plant proposed by the permit applicant" and that "a difference between this case and our nuclear hypothetical is that a plant designed to burn coal cannot run on nuclear fuel without being redesigned from the ground up," and concluding, that even a lesser redesign was beyond the BACT Step 1 analysis). Instead, permit conditions are imposed on the source as the applicant defines it. *Desert Rock* at 60; *Prairie State* at 29. "Looking in the first instance to how the permit applicant defines the proposed facility's purpose or basic design in its application not only harmonizes the BACT definition with the permit application process . . . but also is consistent" with the policy against redefining the source." *Prairie State* at 29.

The applicant's design of the source includes the "applicant's purpose or basic design of the proposed facility." *Desert Rock* at 64 n. 61 (*quoting Prairie State* at 28). Here, however, commenters are proposing a "redesign" of the source in which literally absolutely nothing of the original proposed source would remain. Requiring consideration of a completely different drill vessel would be the equivalent of defining the purpose and basic design as "drilling for oil" – the equivalent of the *reductio ad absurdum* hypotheticals in *Prairie State* and *Sierra Club* in which the source is redefined by identifying the purpose of the facility as "the production of electricity, from coal," *Prairie State* at 28, or by imposing "clean fuel" requirements so as to require construction of a nuclear or hydroelectric facility instead, *see Sierra Club*. If there is such a thing as "source redefinition" – and EPA's policy, the Board's decisions, and the relevant affirming federal case law makes clear that there is – something must remain of the original proposed source. *See Sierra Club* ("We find it significant that all parties here, including Petitioners, agree that Congress intended the permit applicant to have the prerogative to define certain aspects of the proposed facility that may not be redesigned through application of BACT and that other aspects must remain open to redesign through the application of BACT.")

Neither *Desert Rock* nor any other EAB decision would support consideration of a different drill ship as potential BACT. In *Desert Rock* the Board found that the record did not support the Region's decision not to consider integrated gasification combined cycle (IGCC) technology in step 1 of its BACT analysis for the applicant's proposed coal-fired power plant. EAB noted that IGCC had been considered a potentially applicable control technique under step 1 for "coal-fired electric generating plants" in two prior permits the Board had reviewed. *Id*. at 57. Additionally, the applicant itself identified IGCC as one of several technologies that would be "consistent with the proposed facility's purpose, objective, or basic design," and thus would not improperly "redefine the source." *Id*. at 65.[2] (The applicant instead omitted IGCC from its BACT analysis because the technology is not "available" or "commercially viable." *Id*. at 67.) The Board found that, in light of the applicant's admission that IGCC would be consistent with the basic design of the power plant, and IGCC's consideration in prior BACT analyses for power plants, the Region did not adequately explain why IGCC would be redefining the source. *Id*.

---

[2] "To determine whether the Region properly concluded that IGCC would redefine the source in this case, keeping in mind that the Region has broad discretion on this issue, the Board first looks at the administrative record to see how the applicant defined its 'goal, objectives, purpose, or basic design' for the proposed Facility in its application. The Board then looks at whether the Region took a 'hard look' at the applicant's stated purpose to determine which design elements were inherent to the applicant's basic purpose or objective and which elements could be changed to achieve pollutant emissions reductions without disrupting the purpose." *Id*. at 65.

Unlike the applicant in *Desert Rock*, Shell has consistently defined the proposed source as the Discoverer--not a different drillship – throughout the process. *See e.g.* Shell's Initial Application and EPA's Statement of Basis. EPA's Statement of Basis (at 20) explains: "Shell intends to implement their Chukchi Sea exploration drilling program through the use of the Frontier Discoverer drillship and the Associated Fleet." Moreover, even if one were to use the absurd extreme purpose of "drilling for oil" as the basis for a BACT analysis, another drillship would not qualify as BACT. Shell's application explains in detail the unique attributes of the Discoverer for the proposed drilling operations, including mobility, stability, drilling capability, ability to rotate to face into the wind while anchored, fuel capacities, accommodations, deck layout, and countless other features. EPA can appropriately conclude, after taking a hard look at the issue, that requiring Shell to use a different drill ship, with different characteristics, would not be consistent with BACT requirements.

Conclusion

Commenters contend that Shell should be required to compare the per-ton costs of emissions reductions from replacing some engines on the Discoverer with per-ton costs of reductions resulting from using a hypothetical alternate drill ship that has such engines. But to require this comparison would effectively require Shell to consider a fundamentally altered design for the proposed source. Region 10 can properly reject this contention and in its review of Shell's BACT analysis can properly rely on cost data provided below for re-powering the Discoverer to determine in step 4 whether this potential control technology is cost-effective.

ATTACHMENT D

Baseline $PM_{2.5}$ Concentrations Representative of the Chukchi Sea and the use of Wainwright Data

Introduction

Air Sciences believes that baseline $PM_{2.5}$ concentrations in the Chukchi Sea are likely to average about 3 μg/m^3 or less with maximum 24-hour values of 9 μg/m^3 or less. This assertion is based primarily on data collected at Wainwright, secondarily on data collected other Arctic stations. With no local sources within at least 75 miles of the drilling sites in the Chukchi (the nearest sources would be on the Alaska shore between Wainwright and Point Lay) the baseline is regional in scale and likely to be the same throughout both the Chukchi and Beaufort Seas.

Data have been collected in Wainwright from early March 2009 to the present, and that sampling continues. Through October 2009 (eight months) there have been 227 valid daily samples collected. This station is exposed to the regional air of the Chukchi Sea and therefore samples would contain $PM_{2.5}$ from the Chukchi regional air. Wainwright also has local sources of particulate matter, from residential heating, vehicle exhaust, power generation, and surface fugitive dust contributing to the baseline concentrations, which would affect the Wainwright sampling. The task here is to use the Wainwright data to define a reasonable annual average and maximum $PM_{2.5}$ concentration that would represent the highest these two values could be in this Chukchi regional air. In other words it is to separate out particulate matter that is clearly from the local sources.

Although it would be appropriate to gather statistics that could correlate with the vehicle, residential heating and power generation, hereafter called the combustion source categories, this analysis of the Wainwright data focuses on determining whether there is a local wind-blown soil fugitive dust component. And if so, can it be eliminated from the data set to provide a data set representative of the Chukchi Sea. Wind-blown soils are known to be caused by dry and exposed soil surfaces in the presence of high winds. Because of the high latitude and human activity, the surfaces all along the coast have little vegetation and without snow cover are exposed to the winds.

Data Evaluation

The 227 samples are divided into days on which precipitation occurred (greater than 0.01 inch) and days without precipitation (0.01 inch and less) because precipitation is known to scavenge particulate matter from the atmosphere and this possible scavaging effect may need to be separated from the dryness.

Precipitation Days

From Table D-1 below, the third row of data, the average and maximum 24-hour concentrations on precipitation days is 2.9 μg/m^3 and 7 μg/m^3. It is likely that the soil surface would be stabilized on most precipitation days and wind would not cause wind-blown dust. The effect of wind is incorporated by counting the number of hours with average speeds greater than 10 m/s, a speed known to be sufficient to initiate wind-blown dust. Each group of $PM_{2.5}$ concentrations is

subdivided into high-wind days and non-high wind days. This categorization could be done in several different ways and the selection of 4 hours or more of high winds is somewhat arbitrary. The data (rows 1 and 2) show a 40 percent increase in $PM_{2.5}$ average concentration (2.7 μg/m^3 vs. 3.8 μg/m^3) on high wind days but this difference is also near the minimum detection limit of the equipment of 1 μg/m^3 (BAM 1020 Operating Manual, REV G, 2009) so this may not be an important difference. But it could also be due to the effect of high winds on soils on days when perhaps the precipitation began at the end of the day and dry conditions persisted for the first part of the day. The combustion sources are independent of wind speed so this difference could not be related to them. The maximum 24-hour concentration of 7 μg/m^3 is the same for both precipitation with non-high winds and precipitation with high winds days. No correlation of concentration with winds is indicated here and no conclusion is drawn from the maximum 24-hour concentration.

Table D-1: Concentration Statistics

		Daily $PM_{2.5}$ Concentration (μg/m^3)	
	# Days	Average	Maximum
Precipitation Days [3]			
Non-High Wind Days [1]	33	2.7	7
High Wind Days [2]	6	3.8	7
All Wind Days	39	2.9	7
No Precipitation and Stabilized Surface Days [4]			
Non-High Wind Days [1]	75	2.9	8
High Wind Days [2]	18	3.0	6
All Wind Days	93	2.9	8
No Precipitation and Non-Stabilized Surface Days [5]			
Non-High Wind Days [1]	77	2.6	11
High Wind Days [2]	18	9.3	23
All Wind Days	95	3.9	23

[1] Days with less than 4 hours of winds greater than 10 meters/second.

[2] Days with at least 4 hours of winds greater than 10 meters/second.

[3] These days include all days when there is precipitation > 0.01" on that day regardless of snow cover.

[4] These days include the days of snow cover on that day and days with precipitation on the previous day (not the current day).

[5] These days have no snow cover and no precipitation on the previous day.

Non-precipitation Days, Stabilized Surface

The no-precipitation days are divided into days with stabilized surfaces (snow cover greater than 1 inch or precipitation greater than 0.01 inch on the previous day (but not on the sampling day)

and days with non-stabilized surfaces. Considering first the stabilized surface days, the $PM_{2.5}$ average is 2.9 μg/m^3 which is virtually the same as for the precipitation days. These are the days without possible precipitation scavaging and with surfaces not prone to dustiness. Since the average concentration is similar to that of the precipitation days, there is no evidence of a scavaging effect on PM concentration so none is to be removed from the full data set in order to be representative of the Chukchi Sea.

Still looking at the stabilized soil surface data and comparing the high wind days to the non-high-wind day averages, they are essentially the same so there is no apparent effect of high winds and no fugitive dust source is apparent. The 24-hour maximum concentrations are also nearly identical strengthening this conclusion that there is no apparent fugitive dust source with stabilized soils. Thus, both the precipitation and the non-precipitation-stabilized soils cases appear to not be affected much by wind-blown fugitive dust, and are likely to be representative of regional $PM_{2.5}$ concentrations. During these conditions the maximums are in the 6 to 8 μg/m^3 range, indicating that this may represent a regional 24-hour maximum. There is also no evidence of a fugitive dust source during these conditions. From these comparisons these two sets of $PM_{2.5}$ data appear to not be affected by local fugitive dust sources and are therefore representative of the Chukchi Sea baseline.

Non-precipitation Days, Non-stabilized Surfaces

The third set of PM concentrations were collected under conditions of no precipitation and non-stabilized soils. The average concentration under these conditions is 3.9 μg/m^3 which is 35 percent greater than the average for the other days. This suggests a fugitive local dust source related only to non-stabilized soils. However, considering the average concentrations when the data is further divided into high-wind days and non-high wind days, there is a substantial difference in average concentration, 2.6 μg/m^3 to 9.3 μg/m^3 so there is a clear correlation of concentration with non-stabilized soil and high winds. This high-wind day data subset is substantially affected by a local fugitive dust source and is not representative of the Chukchi Sea.

The effect of local fugitive dust sources on Ambient $PM_{2.5}$ measurements is difficult to ascertain. However, we do not believe that the single 24-hour reading of 11 μg/m^3 is an appropriate representative of the 98 percentile 24-hour $PM_{2.5}$ concentration. It is a single reading and the next highest of this data set is 9 μg/m^3, which is near the range of the other maximum values. The actual 98 percentile concentration from the revised data set is 8 μg/m^3. These higher concentrations could be caused by locally generated dust from off-road but there is insufficient evidence for that yet. Thus our conclusion is that the Chukchi data is equal to or below 2.9 μg/m^3 as an average with high 24-hour concentrations of 9 or less.

Table D-2: Listing of Wainwright Data Values

Valid Sample #	Date	24-Hour $PM_{2.5}$ Concentration ($\mu g/m^3$)	Precipitation - Day of (inches)	Snow Cover Depth (inches)	Precipitation - Previous Day (inches)	Hours per Day with Winds > 10 m/sec
1	03/06/09	4	0	19	---	15
2	03/07/09	1	0	19	0	0
3	03/08/09	1	---	19	0	19
4	03/09/09	1	---	19	---	17
5	03/10/09	2	---	19	---	18
6	03/11/09	1	0	20	---	20
7	03/12/09	2	0	20	0	22
8	03/13/09	2	0	19	0	0
9	03/14/09	3	0	18	0	0
10	03/15/09	2	0	18	0	0
11	03/16/09	2	0	18	0	0
12	03/17/09	1	0	17	0	0
13	03/18/09	1	0	18	0	0
14	03/19/09	2	0	17	0	0
15	03/20/09	3	0	17	0	0
16	03/21/09	2	0	17	0	0
17	03/22/09	1	---	16	0	0
18	03/23/09	2	---	16	---	0
19	03/24/09	2	---	16	---	0
20	03/25/09	2	0	15	---	0
21	03/26/09	4	0	15	0	0
22	03/27/09	3	---	16	0	0
23	03/28/09	2	0	16	---	0
24	03/29/09	2	0	15	0	5
25	03/30/09	2	0	15	0	20
26	03/31/09	2	---	15	0	6
27	04/01/09	3	0	16	---	0
28	04/02/09	4	---	16	0	0
29	04/03/09	4	0	16	---	0
30	04/04/09	4	0	15	0	0
31	04/05/09	4	---	15	0	0
32	04/06/09	4	0	15	---	0
33	04/07/09	3	0	15	0	2
34	04/08/09	4	0	15	0	0
35	04/09/09	5	0	15	0	9
36	04/10/09	6	0	16	0	8
37	04/11/09	5	0	16	0	18
38	04/12/09	5	0	16	0	5
---	04/13/09	INVALID	---	---	---	---
---	04/14/09	INVALID	---	---	---	---
---	04/15/09	INVALID	---	---	---	---
---	04/16/09	INVALID	---	---	---	---

Valid Sample #	Date	24-Hour $PM_{2.5}$ Concentration ($\mu g/m^3$)	Precipitation - Day of (inches)	Snow Cover Depth (inches)	Precipitation - Previous Day (inches)	Hours per Day with Winds > 10 m/sec
---	04/17/09	INVALID	---	---	---	---
39	04/18/09	5	0	16	0	0
40	04/19/09	4	0	15	0	0
41	04/20/09	5	---	15	0	0
42	04/21/09	5	0	15	---	0
43	04/22/09	4	---	15	0	7
44	04/23/09	4	0	15	---	2
45	04/24/09	5	---	15	0	0
46	04/25/09	4	---	13	---	11
47	04/26/09	2	0.04	12	---	13
48	04/27/09	4	0	9	0.04	0
49	04/28/09	2	0	8	0	0
50	04/29/09	2	0	8	0	0
51	04/30/09	2	0	7	0	0
52	05/01/09	3	0.01	7	0	0
53	05/02/09	5	0	6	0.01	0
54	05/03/09	5	0	6	0	0
---	05/04/09	INVALID	---	---	---	---
55	05/05/09	8	0	6	0	0
56	05/06/09	5	0	6	0	0
57	05/07/09	4	0.03	6	0	4
---	05/08/09	INVALID	---	---	---	---
---	05/09/09	INVALID	---	---	---	---
---	05/10/09	INVALID	---	---	---	---
---	05/11/09	INVALID	---	---	---	---
58	05/12/09	3	0	7	0	0
59	05/13/09	3	0	12	0	0
60	05/14/09	2	0.01	6	0	0
61	05/15/09	3	0	6	0.01	0
62	05/16/09	3	0	6	0	0
63	05/17/09	2	0	5	0	0
64	05/18/09	3	0	4	0	0
65	05/19/09	6	0	3	0	0
66	05/20/09	5	0	2	0	0
67	05/21/09	3	0	1	0	0
68	05/22/09	1	0	1	0	0
69	05/23/09	2	0	1	0	1
70	05/24/09	2	0	1	0	0
71	05/25/09	2	---	1	0	0
72	05/26/09	1	0	0	---	0
73	05/27/09	3	0	0	0	0
74	05/28/09	1	0.16	1	0	0
75	05/29/09	0	0	1	0.16	0

Valid Sample #	Date	24-Hour $PM_{2.5}$ Concentration ($\mu g/m^3$)	Precipitation - Day of (inches)	Snow Cover Depth (inches)	Precipitation - Previous Day (inches)	Hours per Day with Winds > 10 m/sec
76	05/30/09	1	0	2	0	0
77	05/31/09	2	0.02	6	0	0
---	06/01/09	INVALID	---	---	---	---
78	06/02/09	2	0.01	0	0	0
79	06/03/09	3	---	0	0.01	0
80	06/04/09	3	0.02	0	---	0
81	06/05/09	2	0	0	0.02	0
82	06/06/09	1	0.21	0	0	0
83	06/07/09	2	0.01	0	0.21	0
84	06/08/09	2	0.02	0	0.01	0
85	06/09/09	1	0.03	0	0.02	0
86	06/10/09	1	0	0	0.03	0
87	06/11/09	0	0	0	0	0
88	06/12/09	1	0	0	0	0
89	06/13/09	2	0	0	0	0
90	06/14/09	1	0.07	0	0	0
91	06/15/09	1	0	0	0.07	0
92	06/16/09	1	---	0	0	0
93	06/17/09	4	0	0	---	0
94	06/18/09	7	0	0	0	5
95	06/19/09	3	0	0	0	4
96	06/20/09	3	0	0	0	5
97	06/21/09	3	0	0	0	0
98	06/22/09	4	0	0	0	1
99	06/23/09	3	0	0	0	0
100	06/24/09	3	0	0	0	1
101	06/25/09	7	---	0	0	5
102	06/26/09	4	0	0	---	0
103	06/27/09	0	0	0	0	0
104	06/28/09	1	0	0	0	0
105	06/29/09	5	---	0	0	0
106	06/30/09	3	0.05	0	---	0
107	07/01/09	5	0	0	0.05	0
108	07/02/09	7	0	0	0	0
109	07/03/09	14	0	0	0	10
110	07/04/09	8	0	0	0	6
111	07/05/09	5	0.02	0	0	0
112	07/06/09	3	0	0	0.02	0
113	07/07/09	3	0.03	0	0	0
114	07/08/09	3	0.10	0	0.03	0
115	07/09/09	3	0.41	0	0.1	0
116	07/10/09	4	0.05	0	0.41	0
117	07/11/09	4	0.07	0	0.05	0

Valid Sample #	Date	24-Hour $PM_{2.5}$ Concentration ($\mu g/m^3$)	Precipitation - Day of (inches)	Snow Cover Depth (inches)	Precipitation - Previous Day (inches)	Hours per Day with Winds > 10 m/sec
118	07/12/09	7	0	0	0.07	0
119	07/13/09	7	0	0	0	0
120	07/14/09	11	0	0	0	0
121	07/15/09	5	0.24	0	0	0
122	07/16/09	4	0.07	0	0.24	0
123	07/17/09	3	0.07	0	0.07	0
124	07/18/09	7	0.11	0	0.07	0
125	07/19/09	6	0	0	0.11	0
126	07/20/09	9	0	0	0	2
127	07/21/09	13	0	0	0	14
128	07/22/09	8	0	0	0	5
129	07/23/09	3	0	0	0	0
130	07/24/09	3	0	0	0	0
---	07/25/09	INVALID	---	---	---	---
131	07/26/09	2	0	0	0	0
132	07/27/09	8	0.01	0	0	0
133	07/28/09	5	0.08	0	0.01	0
134	07/29/09	7	0	0	0.08	0
135	07/30/09	9	0	0	0	0
136	07/31/09	6	0.01	0	0	0
137	08/01/09	9	0	0	0.01	1
138	08/02/09	3	0	0	0	0
139	08/03/09	6	0	0	0	0
140	08/04/09	5	0	0	0	0
141	08/05/09	2	0	0	0	0
142	08/06/09	4	0	0	0	0
143	08/07/09	4	---	0	0	0
144	08/08/09	3	0.07	0	---	0
145	08/09/09	3	0.60	0	0.07	6
146	08/10/09	0	0	0	0.6	0
147	08/11/09	1	0	0	0	0
148	08/12/09	1	0	0	0	0
149	08/13/09	2	---	0	0	0
150	08/14/09	2	---	0	---	2
151	08/15/09	6	---	0	---	0
152	08/16/09	4	0.02	0	---	0
153	08/17/09	4	0.16	0	0.02	0
154	08/18/09	7	0.04	0	0.16	5
155	08/19/09	3	0.06	0	0.04	0
156	08/20/09	0	0.02	0	0.06	0
157	08/21/09	2	0.02	0	0.02	0
158	08/22/09	1	0	0	0.02	0
---	08/23/09	INVALID	---	---	---	---

Valid Sample #	Date	24-Hour $PM_{2.5}$ Concentration ($\mu g/m^3$)	Precipitation - Day of (inches)	Snow Cover Depth (inches)	Precipitation - Previous Day (inches)	Hours per Day with Winds > 10 m/sec
159	08/24/09	0	0.04	0	0	0
160	08/25/09	1	0	0	0.04	0
161	08/26/09	1	0	0	0	0
162	08/27/09	1	0	0	0	0
163	08/28/09	2	0.03	0	0	0
164	08/29/09	2	0.01	0	0.03	1
165	08/30/09	3	0.40	0	0.01	8
166	08/31/09	4	0.10	0	0.4	8
167	09/01/09	4	0	0	0.1	0
168	09/02/09	3	0.01	0	0	0
169	09/03/09	14	0	0	0.01	8
170	09/04/09	6	0	0	0	4
171	09/05/09	13	0	0	0	7
172	09/06/09	3	0.09	0	0	0
173	09/07/09	1	0.03	0	0.09	0
174	09/08/09	6	0	0	0.03	0
175	09/09/09	15	0	0	0	4
176	09/10/09	2	0.01	0	0	0
177	09/11/09	3	0	0	0.01	0
178	09/12/09	2	0.12	0	0	0
179	09/13/09	2	0.27	0	0.12	0
180	09/14/09	0	0	0	0.27	0
181	09/15/09	1	0.01	0	0	0
182	09/16/09	1	0	0	0.01	1
183	09/17/09	9	0	0	0	11
184	09/18/09	2	0	0	0	0
185	09/19/09	2	---	0	0	0
186	09/20/09	1	0	0	---	0
187	09/21/09	5	0	0	0	5
188	09/22/09	4	0	0	0	3
189	09/23/09	0	---	0	0	0
190	09/24/09	2	0.01	0	---	0
191	09/25/09	1	0	0	0.01	0
192	09/26/09	0	0.01	0	0	0
193	09/27/09	0	0	1	0.01	0
194	09/28/09	-1	0.01	1	0	0
195	09/29/09	0	0	1	0.01	0
196	09/30/09	0	0	0	0	0
197	10/01/09	-1	0	0	0	0
198	10/02/09	1	0	0	0	0
199	10/03/09	3	0	0	0	8
200	10/04/09	1	0	0	0	5
201	10/05/09	1	0	1	0	0

Valid Sample #	Date	24-Hour $PM_{2.5}$ Concentration ($\mu g/m^3$)	Precipitation - Day of (inches)	Snow Cover Depth (inches)	Precipitation - Previous Day (inches)	Hours per Day with Winds > 10 m/sec
202	10/06/09	3	---	1	0	0
203	10/07/09	15	0	1	---	10
204	10/08/09	23	0	1	0	13
205	10/09/09	0	0	0	0	0
206	10/10/09	1	0.03	0	0	1
207	10/11/09	3	0.11	0	0.03	0
208	10/12/09	1	0	0	0.11	0
209	10/13/09	0	0	0	0	0
210	10/14/09	1	0	0	0	0
211	10/15/09	1	---	0	0	0
212	10/16/09	1	0	1	---	0
213	10/17/09	1	0	1	0	0
214	10/18/09	0	0	1	0	0
215	10/19/09	1	0	1	0	0
216	10/20/09	1	0	2	0	0
217	10/21/09	1	0	3	0	4
218	10/22/09	4	0	4	0	21
219	10/23/09	3	0	6	0	4
220	10/24/09	0	0	6	0	0
221	10/25/09	0	0	5	0	0
222	10/26/09	0	0	6	0	0
223	10/27/09	4	---	6	0	0
224	10/28/09	2	0	7	---	0
225	10/29/09	0	---	6	0	0
226	10/30/09	1	0	6	---	0
227	10/31/09	1	0	6	0	0

Regional $PM_{2.5}$ Monitoring Data

ENVIRON conducted a search for existing scientific measurement programs that could provide data on background pollutant concentrations in the off-shore environment. We did not locate, nor are we aware of, any off-shore background monitoring data from the Arctic that meets PSD monitoring guidelines – likely due to extreme conditions which would make such monitoring virtually impossible. We were particularly interested in PM_{10} and $PM_{2.5}$ data because we expect onshore measurements of these pollutants to be least representative of off-shore background concentrations. Although we discovered and examined voluminous data from extensive studies in lower latitude locations in the Western South Pacific (near Australia), it is not clear that observations near tropical conditions would apply in the Arctic Ocean. Furthermore, PM information from those studies was not in size categories that enabled an evaluation of $PM_{2.5}$ concentrations.

ENVIRON also obtained a scientific paper that analyzed air quality data at a monitor in Sevettijarvi, an isolated location in northern Finland, during an 18 month period from December 1992 to July 5, 1994. The estimate of PM2.5 concentrations due to the Arctic and Norwegian Sea were obtained through a back trajectory analysis. The paper reported only an average over the whole sampling period (1.9 μg/m^3), but also identified the standard deviation. Three standard deviations above the average value results in a maximum (99.7 percentile) $PM_{2.5}$ value of 5.7 μg/m^3 with trajectories from the sea:

$$\text{Max } PM_{2.5} = \mu + 3\sigma = 1943\frac{ng}{m^3} + 3 \times 1266\frac{ng}{m^3} = 5.741\frac{\mu g}{m^3}$$

Chemical analysis of the data revealed that salt and sulfates were the primary components of $PM_{2.5}$.

Researchers at McMurdo station in Antarctica implemented particulate monitoring Hut Point during two periods between 1995 and 1997. The study applied chemical mass balance (CMB) receptor modeling to achieve source apportionment results. Average PM_{10} concentration was found to be 3.4 μg/m^3 and was dominated by crustal material (dirt) and sea salt. By definition, $PM_{2.5}$ concentrations would be lower than PM_{10} values recorded at this site.

Finally, there are a number of background monitoring stations established at Class I areas in the United States and US territories. The purpose of these so-called IMPROVE stations is to monitor air quality related values, including visibility, in relatively pristine national parks and wilderness areas. Most of these sites are located inland and, while representative of inland regional air quality, they are not representative of ocean locations.

The IMPROVE station that we judged most likely to provide in-sight into Arctic conditions was located at Simeonoff, Alaska, an island in the upper Aleutian chain. This station measured PM_{10} and $PM_{2.5}$ from September 2001 through December 2004. Although aerial photographs indicate it, too, may be influenced by local dust events, it provides an indication of background $PM_{2.5}$ and PM_{10} concentrations in a relatively pristine near-shore environment. Table D-3 summarizes three years of data from Simeonoff. The statistics most relevant to NAAQS compliance demonstrations are the 98th percentile 24-hour $PM_{2.5}$ concentration and the maximum 2nd highest 24-hour PM_{10} concentration.

Table D-3: Summary of Simeonoff IMPROVE Station Observations (μg/m^3)

	$PM_{2.5}$	PM_{10}
Number Records	363	365
Min	0.33	0.95
Max	16.41	26.50
Average	2.95	7.38
Standard Deviation	2.12	4.97
98th Percentile	9.34	21.9

In summary, scientific measurements indicate a background $PM_{2.5}$ concentration ranging from 3.4 to 9.3 $\mu g/m^3$, with the latter observation occurring on an island that may be subject to dust effects.

-----Original Message-----
From: Rodger Steen [mailto:rsteen@airsci.com]
Sent: Thursday, December 10, 2009 3:39 PM
To: Nair.Pat@epamail.epa.gov
Cc: 'Eric Hansen'; Hastings.Janis@epamail.epa.gov; 'Environ - Kirk Winges'; 'Octane - Mark Schindler'; Boys.Paul@epamail.epa.gov; Portanova.Mary@epamail.epa.gov
Subject: RE: Info on new engines
Attachments: Discoverer Logging engines EF.pdf

Pat, here is the information you requested on the replacement logging engines - with all emission factors included. Please replace the information sheet provided a few hours ago with this one. VOC emissions are also addressed herein.

Rodger

-----Original Message-----
From: Nair.Pat@epamail.epa.gov [mailto:Nair.Pat@epamail.epa.gov]
Sent: Thursday, December 10, 2009 8:50 AM
To: Rodger Steen
Cc: 'Eric Hansen'; Hastings.Janis@epamail.epa.gov; Environ - Kirk Winges; Octane - Mark Schindler; Boys.Paul@epamail.epa.gov; Portanova.Mary@epamail.epa.gov
Subject: Info on new engines

Rodger:

I was originally planning on sharing my draft of the emission inventory with you late Friday. However, based on the call late yesterday, I understand that Shell has decided to change out two of the emission units from on board the Disco. As we discussed, this will mean a change to the EPA emission inventory. I think I can still meet the Friday if you can get me details on the engines by 11:00 am today (mountain time)
- please note that I do not need any narrative or analysis.

Right now, all I need is the following:

1. Confirmation of which engines are to be replaced
2. Model info, rating etc. of replacement engines
3. Emissions or emissions factors for replacement engines

You can always follow up with your analysis to Mary - as she will be determining whether a re-modeling is required.

Thanks

Pat Nair
Ph. 208-378-5754
Fax: 208-378-5744
Office of Air, Waste & Toxics
U.S. EPA Region 10
1435 N. Orchard Street
Boise, Idaho 83706

Air Sciences Inc.	PROJECT TITLE: Shell Offshore, Inc.	BY: S. Pryor	
	PROJECT NO: 180-15-1	PAGE: 1	OF: 1
ENGINEERING CALCULATIONS	SUBJECT: Discoverer Emissions-AK OCS	DATE: December 10, 2009	

Logging Winch Units

Application Submission

Unit ID	Description	Make/Model	Rating	Comment
FD-19	Logging Winch	Detroit / 4-71N	128 hp	
FD-20	Logging Winch	John Deere/4024TF270	36 kW	Tier 2 engine standard

Emission Factors

Pollutant	Unit	EF Uncontrolled		EF controlled		Control	Reference
NOx							
	Discoverer Cementing & Logging 71 series engines	11.72	g/bhp-hr	11.72	g/bhp-hr	None	Max of 8 test from EPA/600/8-90/057F
	Discoverer John Deere Logging Winch	7.5	g/kW-hr	5.60	g/bhp-hr	None	Tier 2 emission limit
PM10							
	Discoverer Cementing & Logging 71 series engines	1.92	g/bhp-hr	0.288	g/bhp-hr	CDPF	Max of 8 test from EPA/600/8-90/057F
	Discoverer John Deere Logging Winch	0.6	g/kW-hr	0.067	g/bhp-hr	CDPF	Tier 2 emission limit
CO							
	Discoverer Cementing & Logging 71 series engines	6.55	g/bhp-hr	0.655	g/bhp-hr	CDPF	Max of 6 test from EPA/600/8-90/057F
	Discoverer John Deere Logging Winch	5.5	g/kW-hr	0.410	g/bhp-hr	CDPF	Tier 2 emission limit
VOC							
	Discoverer Cementing & Logging 71 series engines	2.01	g/bhp-hr	0.201	g/bhp-hr	CDPF	Max of 6 test from EPA/600/8-90/057F
	Discoverer John Deere Logging Winch	7.5	g/kW-hr	0.560	g/bhp-hr	CDPF	Tier 2 emission limit

Emission Controls

CDPF	CO, VOC, HAPs Reduction	90%
CDPF	PM Reduction	85%

BACT Analysis

Unit ID	Description	Make/Model	Rating	Comment
1723	Logging Winch	Caterpillar/C7	250 hp	Tier 3 engine standard, Built 2008
3248 or 3285	Logging Winch	John Deere/PE4020TF270D	35 hp	Tier 2 engine standard, Built 2005

Emission Factors

Pollutant	Unit	EF Uncontrolled		EF controlled		Control	Reference
NOx							
	Caterpillar/C7	2.85	g/bhp-hr [1]	2.85	g/bhp-hr	None	Tier 3 Offroad Engine Emission Standards
	John Deere/PE4020TF270D	5.32	g/bhp-hr [1]	5.32	g/bhp-hr	None	Tier 2 Offroad Engine Emission Standards
PM10							
	Caterpillar/C7	0.15	g/bhp-hr	0.15	g/bhp-hr	None	Tier 2 Offroad Engine Emission Standards
	John Deere/PE4020TF270D	0.45	g/bhp-hr	0.07	g/bhp-hr	CDPF	Tier 2 Offroad Engine Emission Standards
CO							
	Caterpillar/C7	2.61	g/bhp-hr	2.61	g/bhp-hr	None	Tier 3 Offroad Engine Emission Standards
	John Deere/PE4020TF270D	4.10	g/bhp-hr	0.41	g/bhp-hr	CDPF	Tier 2 Offroad Engine Emission Standards
VOC							
	Caterpillar/C7	0.15	g/bhp-hr [1]	0.15	g/bhp-hr	None	Tier 1 Offroad Engine Emission Standards
	John Deere/PE4020TF270D	0.28	g/bhp-hr [1]	0.03	g/bhp-hr	CDPF	Tier 2 Offroad Engine Emission Standards

[1] The certified combined NOx+NMHC factor was split NOx/NMHC by 95%/5%. Ref: DRAFT Engineering Evaluation Report, San Francisco Hall of Justice, http://www.baaqmd.gov/~/media/Files/Engineering/Public%20Notices/2009/20382/B9597_nsr_20382_eval_071009.ashx

Emission Controls

CDPF	PM Reduction	85%
CDPF	CO, VOC, HAPs Reduction	90%

Conversions

1.340 hp/kW

From: Kirk Winges [mailto:kwinges@Environcorp.com]
Sent: Friday, December 11, 2009 10:43 AM
To: boys.Paul@epamail.epa.gov
Cc: Rodger Steen; Mark Schindler; Susan.Childs@shell.com; Eric Hansen
Subject: edited BACT

Hi Paul:

Based on our discussion yesterday, I have revised the BACT analysis with the changes we talked about. These are mostly numerical. The big one is the change to off-road emission factors for all engines, rather then the marine factors. I also got the capital costs included in the SCR cost analysis – just an oversight on our part.

I am working at home this morning, if you need to reach me. My cell is 206-794-6010 and my home number is 206-420-2248. I will transition up to Lynnwood sometime probably mid-day.

Thanks,
Kirk

Kirk Winges | Principal Consultant
ENVIRON International Corporation
19020 33rd Avenue W, Suite 310
Lynnwood, WA 98036
V: 425.412.1813 | F: 425.412.1840

This message contains information that may be confidential, privileged or otherwise protected by law from disclosure. It is intended for the exclusive use of the Addressee(s). Unless you are the addressee or authorized agent of the addressee, you may not review, copy, distribute or disclose to anyone the message or any information contained within. If you have received this message in error, please contact the sender by electronic reply to email@environcorp.com and immediately delete all copies of the message.

Diesel Engine Best Available Control Technology Analysis

Frontier Discoverer Drill Ship

Prepared for:

Shell Offshore, Inc.

Prepared by:

ENVIRON International Corp.
19020 33rd Ave W, Suite 310
Lynnwood, Washington 98036

December 2009

Project No. 0322090A

ENVIRON

TABLE OF CONTENTS

Page

1.0 INTRODUCTION 1

2.0 MAIN ENGINE ISSUES 1
- 2.1 ENGINE REPLACEMENT 2
- 2.2 NOX EMISSIONS 2
- 2.3 CDPF FILTERS 3

3.0 SMALL DIESEL ENGINE REVIEW 3

4.0 SMALL DIESEL ENGINE AND DIESEL COMPRESSOR BACT ANALYSIS 11
- 4.1 NOX BACT ANALYSIS 11
  - 4.1.1 Identification of Possible Control Alternatives 12
    - 4.1.1.1 Cam Shaft Cylinder Reengineering Kit 12
    - 4.1.1.2 Exhaust Gas Recirculation (EGR) 12
    - 4.1.1.3 Ignition Timing Retard (ITR) 12
    - 4.1.1.4 Engine Replacement 13
    - 4.1.1.5 Selective Catalytic Reduction (SCR) 13
    - 4.1.1.6 NOx Adsorber 14
    - 4.1.1.7 Lean NOx Catalyst (LNC) or Hydrocarbon-SCR (HC SCR) 14
    - 4.1.1.8 Summary of Potential Control Alternatives 14
  - 4.1.2 Technical Feasibility of Control Alternatives 15
    - 4.1.2.1 Cam Shaft Cylinder Reengineering Kit 15
    - 4.1.2.2 Exhaust Gas Recirculation (EGR) 16
    - 4.1.2.3 Ignition Timing Retard (ITR) 16
    - 4.1.2.4 Engine Replacement 17
    - 4.1.2.5 Selective Catalytic Reduction (SCR) 17
    - 4.1.2.6 NOx Adsorber 19
    - 4.1.2.7 Lean NOx Catalysts (LNC) or Hydrocarbon-SCR (HC SCR) 19
    - 4.1.2.8 Summary of Alternatives Determined to be Technically Feasible 20
  - 4.1.3 Effectiveness of Remaining Alternatives 20
    - 4.1.3.1 Cam Shaft Cylinder Reengineering Kit 20
    - 4.1.3.2 Engine Replacement 21
    - 4.1.3.3 Ranking of Remaining Alternatives by Effectiveness 21
  - 4.1.4 Cost-Effectiveness Analysis 21
    - 4.1.4.1 Cam Shaft Cylinder Reengineering Kit 21
    - 4.1.4.2 Engine Replacement 22
    - 4.1.4.3 Selective Catalytic Reduction (SCR) 23
  - 4.1.5 Energy and Environmental Considerations 24
    - 4.1.5.1 Cam Shaft Cylinder Reengineering Kit 24
    - 4.1.5.2 Exhaust Gas Recirculation (EGR) 24
    - 4.1.5.3 Ignition Timing Retard (ITR) 24
  - 4.1.6 Selection of BACT for NO_X Emissions From Small Diesel Engines 25
- 4.2 EXHAUST PARTICULATE MATTER BACT ANALYSIS 25

4.2.1 Identification of Possible Control Alternatives 26
4.2.1.1 Good Combustion Practices, Low Sulfur Fuel (LSF), and Crankcase Ventilation Controls.....26
4.2.1.2 Engine Replacement.....27
4.2.1.3 Oxidation Catalyst (OxyCat).....27
4.2.1.4 Diesel Particulate Filter (DPF) 27
4.2.1.5 Catalytic Diesel Particulate Filter (CDPF) 27
4.2.2 Technical Feasibility of Control Alternatives 28
4.2.2.1 Engine Replacement.....28
4.2.2.2 Oxidation Catalyst (OxyCat).....28
4.2.2.3 Diesel Particulate Filter (DPF) 28
4.2.2.4 Catalytic Diesel Particulate Filter (CDPF) 29
4.2.3 Effectiveness of Remaining Alternatives 29
4.2.3.1 Engine Replacement.....29
4.2.3.2 Oxidation Catalyst (OxyCat).....29
4.2.3.3 Diesel Particulate Filter (DPF) 29
4.2.3.4 Catalytic Diesel Particulate Filter (CDPF) 30
4.2.3.5 Ranking of Remaining Alternatives by Effectiveness.....30
4.2.4 Cost-Effectiveness Analysis.....30
4.2.4.1 Engine Replacement.....30
4.2.4.2 Catalytic Diesel Particulate Filter (CDPF) 31
4.2.4.3 Oxidation Catalyst (OxyCat).....31
4.2.4.4 Diesel Particulate Filter (DPF) 32
4.2.5 Selection of BACT for PM Emissions From Small Diesel Engines 32

Appendix – Cost Effectiveness Calculations and Communications Records

DIESEL ENGINE BACT ANALYSIS

Shell Offshore Inc.
Frontier Discoverer Drill Ship

1.0 INTRODUCTION

Shell Offshore Inc. (Shell) has applied to EPA Region 10 for preconstruction permits to operate the Frontier Discoverer drill ship and its associated fleet for exploratory drilling in the Chukchi and Beaufort Seas. Based on calculated potential annual emission rates, the proposed source is classified as a major stationary source, and is therefore subject to the EPA's new source review (NSR) permitting rules codified in 40 CFR 52.21. Among the required elements of a permit application submitted under NSR is the requirement to conduct a best available control technology (BACT) analysis for any criteria pollutant that the source would emit in "significant" quantities, as defined in 40 CFR 52.21(b)(23)(i).

This document is intended to supplement the BACT analysis in these revised Chukchi Sea permit application submitted in February 2009. This document focuses on providing additional BACT detail for diesel engines. The primary focus here is on NOx emissions, and to a lesser extent particulate matter emissions, because public comments criticized the BACT analysis for these pollutants.

ENVIRON reviewed the engines proposed for use on the drill ship and, based on that review, investigated control technologies to determine which would constitute BACT for each engine. The sections that follow discuss the control technologies available and, ultimately, the selection of BACT for each emission unit .

2.0 MAIN ENGINE ISSUES

BACT for the main generator engines was addressed in the February permit application. This supplement addresses three issues for the main generator engines:

- Replacement of the main engines with newer engines,
- Use of an emission factor for NOx of 0.5 grams per kilowatt hour (g/kW-hr) when manufacturer information indicated the engines might perform at a lower emission level, and

- Use of a Catalytic Diesel Particulate Filter (CDPF) instead of a oxidation catalyst (OxyCat) as a means of particulate control.

2.1 ENGINE REPLACEMENT

The permit applications calculate engine NOx emissions using an emission factor of 0.5 g/kW-hr; annual emissions are 1.56 tons per engine or a total of 9.36 t/y for all 6 engines. Replacement with a new engine of similar size would require the engine to meet the Tier 3 emission standard for marine engines of 5.8 g/kW-hr or 4.33 grams per horse-power hour (g/hp-hr). Assuming SCR would result in 95% control (AP-42 top performance) the new engine would emit NOx at the rate of 0.22 g/kW-hr, with a net NOx savings of 56%. Emissions from each engine would be lowered by 0.87 tons or 5.24 tons for all 6 engines.

The capital cost for each engine replacement is estimated by Shell at $365,000 for an annualized cost rate of $45,001. The cost/benefit ratio is then $51,508 per ton of NOx removed. This cost is considered too high to be judged BACT and therefore, engine replacement is not considered an acceptable BACT control.

A similar calculation can be made for particulate matter, but the cost per ton for engine replacement is even higher because particulate matter mass emissions are much lower,. For example, even if the new engine had no particulate matter emissions, the reduction would be only 0.4 t/y per engine and with the annual cost of $45,001 to replace the engine, cost/benefit calculations show over $110,000 per ton of particulate matter removed.

2.2 NOX EMISSIONS

EPA's draft permit limits NOx emissions from the six generator engines to 0.5 g/kW-hr. This is an extremely low NOx emission factor. For example, the 3 most recent permits issued by the Alaska DEC for diesel engine generators used the following emission factors:

- Nixon Fork Mine, Issued 8/13/2009 included a permit for an engine generator operating at 11.1 g/kW-hr

- The Naknek Power Plant, Issued 3/31/2009 included a permit for an engine generator with an emission rate of 26.0 g/kW-hr

- The Liberty Offshore Oil Project (BP), Issued 12/19/2008 included a permit for an engine generator with an emission rate of 6.3 g/kW-hr.

The recent Tier 4 emission limits for marine engines that will not take effect until 2014 will only require that engines meet an emission rate of 1.8 g/kW-hr. EPA's emission factor reference document indicates uncontrolled diesel engines have an emission rate of 14.6 g/kW-hr and that SCR technology can control 80% to 95% of the emissions of NOx. Even at 95% control, the emission factor for NOx would be 0.729 g/kW-hr. Thus the quoted emission factor for the current project reflects a 97% control over the current AP-42 emission factor.

Despite this advanced performance, the manufacturer has indicated that under ideal conditions, including steady loads and mild ambient temperatures, the engines may actually perform at an emission rate as low as 0.1 g/kW-hr. However, they were only willing to guarantee emissions of 0.5 g/kW-hr. Shell believes that EPA has appropriately selected the level of 0.5 g/kW-hr as BACT for the engines. While lower levels might be attained under some conditions, such low levels cannot be continuously attained and do not reflect BACT.

2.3 CDPF FILTERS

The current application concludes that OxyCat is the appropriate particulate matter (PM) BACT for the engine generator sets. It has been suggested that lower PM emissions could be attained if CDPF were to be used on the main engines as an alternative to OxyCat. The use of CDPF on these engines is not feasible because these filters add back pressure on the engines which will cause the SCR system to fail.

Furthermore, the potential reduction in emissions is very small because emissions of particulate matter are very small with the OxyCat control. Each engine emits only 0.4 tons per year of PM. The use of CDPF as an alternative to OxyCat, if it were feasible, would reduce PM emissions by only 0.28 t/y. The emission rate with OxyCat meets the Tier 4 emission standards for marine engines that will not take effect until 2014 of 0.25 g/kW-hr. As shown in the BACT analysis for the original application, the cost benefit for CDPF would be between $22,000 to $27,000 per ton of PM removed. This cost is considered too high to be judged BACT by Shell and therefore, engine replacement is not considered an acceptable BACT control.

3.0 SMALL DIESEL ENGINE REVIEW

The small diesel engines associated with the proposed source can be divided into five categories:

- Air compressors and hydraulic power units,
- Cranes,

- Cementing Units,,
- Logging Units, and
- Diesel Generators on the Supply Ship

This section will provide information and operational details for each group of engines.

MLC Air Compressors and HPU(FD-9, 10, 11, 12, and 13)

The Mud Line Cellar (MLC) air compressors (FD-9, 10, and 11) and hydraulic power units (HPUs) (FD-12 and 13) are used for drilling MLCs, which is the initial phase of drilling activity, lasting about six days. These engines would be operated at between 50 and 100 percent of maximum capacity to evacuate the MLC. Shell requests an Owner Requested Restriction (ORR) of 63 days per season of capacity operation for each of these two engine groups. The MLC air compressors will be new Tier 3 engines with no add-on emission controls, while the HPUs are existing engines with catalytic diesel particulate filters (CDPF) for control of oxidizable emissions (i.e., VOCs, CO, and soluble PM) and solid PM.

Table 3-1 identifies the MLC air compressor engine size, make and model numbers. As stated above, these engines will be new engines designed to meet new Tier 3 engine regulations, the most stringent emissions standards for commercially available engines of this size.

Table 3-1. MLC Air Compressor Tier 3 Engines

Unit	Manufacturer	Model No	Size (hp)	Load %	Operating factor (days per year)
FD-9	Caterpillar	C-15	540	50 to 100	63
FD-10	Caterpillar	C-15	540	50 to 100	63
FD-11	Caterpillar	C-15	540	50 to 100	63

Table 3-2 identifies the HPU engine sizes, make and model numbers. As stated above, the HPUs are existing engines with catalytic diesel particulate filters (CDPF) for control of VOCs, CO and PM. The engines were built in 1978 and 1979.

Table 3-2. Hydraulic Power Units

Unit	Manufacturer	Model No	Size (hp)	Load %	Operating factor (days per year)
FD-12	Detroit	8V71	250	50 to 100	63
FD-13	Detroit	8V71	250	50 to 100	63

The MLC equipment is temporary equipment that is loaded onto the drill ship for the MLC drilling operation that occurs at the beginning of the well drilling program. The two hydraulic power units (HPUs) and the three air compressor units (ACUs) are each powered by diesel engines. These units have been designed to be portable so they can be removed from the drill ship at any time, should the deck space be required for other equipment or materials associated with the well. However, operationally, the preference is to have these units available on board the drill ship to minimize time required to set up the units for a second MLC operation if so required, as well as to reduce the potential of damage or corrosion that might occur if they are stored on the deck of an anchor handling supply vessel. Figure X-1 below shows the location and size of the Air Compressor units. The air compressors are quite large (20 ft x 7.3 ft w x 8 ft h each), and as a result there is a limited number of locations that will allow easy access for operations and maintenance. The area chosen was the port forward casing racks near the drill floor, as shown by the pictures in Figure 3-1.

Figure 3-1. Air Compressor Units for MLC

Operationally, the HPUs need to be located as close to well center as possible to reduce the length of the umbilical hose that is required to supply the power fluid to the MLC bit. In 2007, the location that was seen to be best to store and operate the HPUs was the top of the BOP 'garage' (See Figure 3-2). Although limited on space to layout the HPUs (Figure 3-3) and the hose reel (Figure 3-4), the proximity to and straight line access to the drill floor was an advantage. Figure 3-2 shows the location relative to the drill floor and Figure 3-3 shows one of the units in place. Each HPU is approximately 12 ft x 7 ft w x 8 ft h.

Figure 3-2. Location for the HPUs

Figure 3-3. Hydraulic Power Unit No.2

Figure 3-4. HPU Hose Reel

Figure 3-5 Port and Starboard Deck Cranes

Cranes (FD-14 and 15)

The Discoverer has two cranes (see Figure 3-5) mounted on pedestals that are used intermittently to move materials around the deck and to on-load supplies from the re-supply ship. The engine operating rates are highly variable, and depend on the load being moved.

Shell proposes an ORR for the combined operation of the cranes equivalent to 63 days per season of capacity operation, to be demonstrated through tracking of fuel consumption. The crane engines have CDPFs for control of soluble organic fraction and solid particulate matter, carbon monoxide, and volatile organics. The crane engines were built in 1974. A summary of the crane engines are shown in Table 3-3.

Table 3-3. Crane engine sizes, make and model numbers..

Unit	Manufacturer	Model No	Size (hp)	Load %	Operating factor (days per year)
FD-14	Caterpillar	D343	365	variable	63
FD-15	Caterpillar	D343	365	variable	

Cement Units (FD-16, 17, and 18)

Three cementing units are used intermittently to fix casings in the hole and seal the drill hole when drilling is interrupted or ended. The cementing units force a slurry of cement and additives down the casing and into the annular space between the casing and the wall of the borehole when the drill pipe is pulled out of the hole, or for P&A'ing wells. The cement units are also used intermittently as high pressure pumps for hydrostatically testing well equipment and drilling components, such as the wellhead connections, the blowout preventer and other connections.

Because drilling cannot take place simultaneously with cementing, the generators will be operating only at low loads when cementing occurs. This decrease in generator emissions was not taken into account in the impact analysis of the permit application. Shell requests an ORR equivalent to capacity operation for 27.8 percent of the day for the three cementing unit engines and the two logging units (discussed below) combined, to be demonstrated through tracking of fuel consumption. The cementing units are equipped with CDPFs for control of volatile organics, carbon monoxide, and organic particulate matter. Table 3-4 below identifies the cementing unit engine characteristics.

Table 3-4. Cementing Units

Unit	Manufacturer	Model No	Size (hp)	Load %	Operating factor (days per year)
FD-16	Detroit	8V-71N	335	Low	168
FD-17	Detroit	8V-71N	335	Low	168
FD-18	GM	3-71	147	Low	168

Logging Units (FD-19 and 20)

The Logging winch unit and electrical power generator are powered by diesel engines. The logging equipment is used to gather information from the well after the drill stem is removed. When the logging equipment is operated, the cementing units would be off and the drilling generators would be operating at low load. The logging units operate at variable and unpredictable loads. The logging units also have CDPFs for control of volatile organics, carbon monoxide, and organic and solid particulate matter.

The electrical generator has a Tier 2 MMG35 generator engine (35 hp), as shown in Figure 3-6. The load for the generator varies depending on the type of operation and is summarized as follows, but the generators are very lightly loaded most of the time.

- Data Acquisition systems – Steady load ~5-10KW
- Lights – Varying load 0 – 3 KW.
- Heating – Varying load 0 – 20 KW

Figure 3-6. Logging Generators

The logging winch unit (Caterpillar C7, 250 hp) meets the Tier 3 engine standard. The loads on the winch unit also vary and are summarized as follows:

- <5% during rig-up, rig-down, and when stopped in a well.
- Negative while descending into the well. While the tools are moving downward the engine is acting as a brake on the hydraulic system.
- ~5-15% of full power while logging the well dependent on tension and logging speed.
- 20-100% when retrieving the tools after logging, with the power need dependent on tension and well depth. With the power level dropping constantly as tension drops due cable retrieval. During this phase the load goes to zero every time the winch is stopped.

A logging job does not proceed smoothly through the four phases described above in a progression. During decent the winch is reversed several times to check tension, to clear obstructions, and to run repeat section. During retrieval the winch is often stopped when an obstruction is encountered or a wrap is missed.

Because the logging engines and the cementing unit engines cannot be used at the same time, Shell proposes to apply the same ORR to both the cementing and the logging units: the cementing units and logging units will operate no more than 27.8 percent of capacity in any calendar day. In other words, the daily fuel consumption restriction on the cementing units is to include use of the logging units.

A summary of the logging unit engine characteristics are shown in Table 3-5. Only one John Deere unit is required. Either unit 3248 or 3285 will be sent to the rig prior to the start of the drilling season. Both John Deere units were built in 2005 and the Caterpillar unit was built in 2008. Note that unit 1723 is listed as a Caterpillar C7 engine, which differs from the original permit application, which showed an older Detroit Diesel 8V-71N engine. Since the application was submitted, the older engine was replaced with the larger unit. These units are skid-mounted, and the older engine can be replaced on the ship if requested. However, the newer engine, although twice as large at 250 horsepower, has lower emissions than the original engine because the newer engine is a Tier 3 engine. For example, for NOx, the emissions from the older engine were calculated to be 3.31 lb/hr, while the newer 250 hp Tier 3 engine has maximum potential emissions of only 1.68 lb/hr. Actual emissions will be even lower for this engine because it will operate under the same fuel restriction in the permit for the older engine. Accordingly, in this BACT assessment, we have assumed EPA's preference will be for the newer, lower emitting engine.

Table 3-5. Logging Units (Generators and Winch Units) model year

Unit	Manufacturer	Model No	Size (hp)	Load %	Operating factor (days per year)
3248	John Deere	PE4020TF270D	35	Light and variable	168
3285	John Deere	PE4020TF270D	35	Light and variable	168
1723	Caterpillar	C7	250	Light and variable	168

Supply Ship Diesel Generators (FD-31)

When attached to the Discoverer, the engines on the supply ship become part of the stationary source and subject to BACT. Only one of two identical utility generators on board the supply ship will operate when the supply ship is attached to the Discoverer. The utility generator engines are both Caterpillar D3406 engines. Because of their infrequent connection to the Discoverer (only 96 hours per year) annual emissions from these engines is very small, so the cost of any proposed control measure is very high when compared with the potential emission reduction. No emission controls on the supply ship generator are warranted.

4.0 SMALL DIESEL ENGINE AND DIESEL COMPRESSOR BACT ANALYSIS

BACT for small diesel engines (i.e., less than 600 hp) and diesel compressors was addressed in the original permit application. However, the review was limited to the RACT/BACT/LAER Clearinghouse (RBLC) and the California Air Resources Board Statewide Best Available Control Technology Clearinghouse (CA-BACT). While these databases provide an indication of what controls may be applied in practice, this supplemental review expands and updates the control technology review to include all potential control alternatives, including cutting-edge technologies still under development. These technologies were evaluated and ranked by effectiveness, reviewed for potential application to the engines identified in the previous section, and, when necessary, whether a particular technology is cost-effective or would result in unacceptable energy or environmental impacts.

4.1 NOX BACT ANALYSIS

NO_X is generated when combustion temperatures are high enough for the nitrogen in the combustion air or bound in the fuel to combine with oxygen to form NO. Depending upon conditions, some portion of the NO will react to form NO_2.

4.1.1 Identification of Possible Control Alternatives

There are a variety of options available for controlling NO_X emissions from combustion sources. Some options involve combustion controls that reduce NO_X formation, while others utilize add-on control devices to remove NO_X after it is formed. NOx reduction approaches that do not involve the application of a control technology were also considered.

4.1.1.1 Cam Shaft Cylinder Reengineering Kit

The Clean Cam Technology Systems (CCTS) technology consists of engine-specific retrofit components, including a proprietary cam shaft. It reduces NOx emissions by increasing the volume of residual exhaust gas that remains in the combustion chamber after the power stroke. These residual exhaust gases absorb heat and reduce the peak combustion temperature, which results in lower NOx emissions. The heat absorption by the residual exhaust gases occurs within the camshaft to reduce NOx and does not lower the exhaust temperature. The injection timing can be advanced on some engines to maximize PM emission reductions, or it can be varied to achieve the desired balance of NOx versus PM reductions. The technology has been certified through the California Air Resources Board's (CARB's) Equipment and Process Certification Program.

4.1.1.2 Exhaust Gas Recirculation (EGR)

Exhaust gas recirculation reduces NOx emissions from diesel engines by re-circulating exhaust gases back to the turbocharger or, in the case of naturally aspirated engines, to the intake manifold. The temperature of the re-circulated gases is typically lowered with an intercooler. The cooled exhaust gases have a higher heat capacity than air and contain less oxygen thereby lowering NOx formation. Both low and high pressure EGR systems exist, but the low-pressure EGR is the most suitable for retrofit applications because it does not require engine modifications[1].

4.1.1.3 Ignition Timing Retard (ITR)

Retarding the ignition timing delays the start of fuel injection to later in the power cycle, which increases the volume of the combustion chamber and reduces the residence time of the combustion products, thereby reducing the magnitude and duration of peak temperatures. This, in turn, has the potential for reduced NOx formation.

[1] Stationary Diesel Engines in the Northeast: An Initial Assessment of the Regional Population, Control Technology Options and Air Quality Policy Issues, Northeast States for Coordinated Air Use Management, June 2003.tionary

4.1.1.4 Engine Replacement

Engine replacement is not a control technology *per se*, but the replacement of an existing engine with a new engine of more current design that emits NOx at a lower rate. The replacement engine would have to be capable of performing the duties required of the existing engine under the same operational conditions.

New replacement engines would be manufactured to meet Federal Tier 3 emission standards. The State of California imposes more stringent emission regulations than the Federal standards. Several of the references in this evaluation also include reference to the work by the California Air Resources Board (CARB). The CARB has created a voluntary Portable Engine Registration Program (PERP), which allows owners and operators to register their portable engines / equipment and operate them throughout the state without obtaining permits from local air districts. The current registration requirements for 2009 and 2010 are as follows:

- Engines rated 50 to 75 bhp: Interim Tier 4.
- Engines rated 75 to 750 bhp: Tier 3.
- Engines rated over 750 bhp and over: Tier 2.

Air Pollution Control Districts (APCDs) and Air Quality Management Districts (AQMDs) in California use this program when permitting portable engines including engines that are skid mounted for offshore platforms and drilling operations. For example, the Santa Barbara County APCD, which has offshore platforms in its jurisdiction, considers the CARB Portable Engine Registration Program as BACT, and does not require additional controls for engines associated with those sources.[2]

4.1.1.5 Selective Catalytic Reduction (SCR)

Selective catalytic reduction (SCR) systems are widely used technologies for controlling NO_X emissions from combustion sources. In the SCR process, ammonia or urea is mixed with the exhaust from a combustion device, and the NO_X reacts with the ammonia to form nitrogen and water. The mixture is passed through a catalyst bed, which allows the reduction reaction to proceed at lower temperatures than it would otherwise occur.

[2] Personal conversation with Terry Snyder of the Santa Barbara County Air Pollution Control District on November 17, 2009

4.1.1.6 NOx Adsorber

Under this technology, NOx is adsorbed by a chemical, typically a barium salt, or other elemental salt. The adsorbent is coated onto a honeycomb monolith or onto the inside surface of the exhaust duct. Once the catalyst is saturated, the NOx adsorbers must be regenerated. Regeneration requires heat and storage of chemical (e.g. potassium) which results in KNO3.

4.1.1.7 Lean NOx Catalyst (LNC) or Hydrocarbon-SCR (HC SCR)

Lean NOx catalysts (LNC), also known as hydrocarbon-SCR (HC-SCR) systems, use an advanced catalyst to capture and store NOx. The catalyst is regenerated during short periods when excess hydrocarbon (HC) in the exhaust removes the stored NOx and reduces it to nitrogen and water. The HC in the exhaust can be either unburned fuel ("native") from the engine, or additional fuel added to the exhaust gases through injection. This system has the advantage that no additional reductant, such as the ammonia or urea required for an SCR system, is necessary. Emissions of excess HC reductant (i.e., "slip") is addressed by a DPF (Diesel Particulate Filter) or a DOC (Diesel Oxidation Catalyst) located downstream of the system. Similar to SCR systems, LNC systems operate best at consistent high loads, and are not amenable to long periods of engine idle.

4.1.1.8 Summary of Potential Control Alternatives

Based on literature and database searches the following alternatives are possible for controlling NO_X emissions from compression ignition engines less than 600 hp:

- Cam Shaft Cylinder Reengineering Kit
- Exhaust Gas Recirculation (EGR)
- Ignition Timing Retard (ITR)
- Engine Replacement
- Selective Catalytic Reduction (SCR)
- NOx Adsorber
- Lean NOx Catalyst (LNC) or Hydrocarbon-SCR (HC-SCR)

Table 4-1 Provides a summary of the BACT Control Options for each of the engine groups considered here.

Table4- 1. Summary of NOx BACT Analysis for Small Engines

	Engine:	MLC Comp.	HPU	Cranes	Large Cement	Small Cement	Large Logging	Small Logging	Supply Ship Gen.
	Model:	Cat. C15	DD 8V71	Cat D343	DD 8V71	GM 3-71	Cat C7	Deere	Cat 3406
	Size:	540 hp	250 hp	365hp	335 hp	147 hp	250 hp	35 hp	292 hp
	Quantity:	3	2	2	2	1	1	1	2
Option									
Replace	Included?	No	No	No	No	No	No	No	No
	Cost/ton?		$8,671	$25,790	$44,744	$44,740		$54,576	$36,224
SCR	Included?	No	No	No	No	No	No	No	No
	Feasible?	No	No	No	No	No	No	No	No
	Cost/ton?								
NOx Adsorber	Included?	No	No	No	No	No	No	No	No
	Feasible?	No	No	No	No	No	No	No	No
	Cost/ton?	$36,896							
Lean NOx Cat	Included?	No	No	No	No	No	No	No	No
	Feasible?	No	No	No	No	No	No	No	No
	Cost/ton?								
Clean Cam	Included?	Yes	No	No	No	No	Yes	Yes	No
	Feasible?		Yes	No	Yes	No			No
	Cost/ton?		$16,202		$12,206				
EGR	Included?	Yes	No	No	No	No	Yes	Yes	No
	Feasible?		No	No	No	No			No
	Cost/ton?								
ITR	Included?	Yes	No	No	No	No	Yes	Yes	No
	Feasible?		No	No	No	No			No
	Cost/ton?								

"Included" means the technology is currently installed or proposed to be installed.

4.1.2 Technical Feasibility of Control Alternatives

In this section, the control alternatives presented in the previous section are evaluated for technical feasibility as applied to the proposed engines under the proposed operational conditions.

4.1.2.1 Cam Shaft Cylinder Reengineering Kit

The CCTS retrofit kit is designed for older (pre-MY2000) Detroit Diesel Corporation two-stroke engines, model series 71 and 92. It is commercially available and has been installed on engines used in oil well drilling. The manufacturer also indicated that they are moving more towards marine applications and the product has been tested on a U.S. Navy ship. This product can be used with existing California diesel fuel, and testing is underway for the use with ULSD. This product was also tested in Alaska, and the manufacturer found that the system performs

adequately under the cold climate when using regular diesel fuel.[3] The CCTS retrofit kits are not available for the Caterpillar engines, thus this technology is judged infeasible for all engines except the two HPU engines and the two larger Cementing unit engines.

4.1.2.2 Exhaust Gas Recirculation (EGR)

It is not feasible to retrofit the HPU units, the cement units, the cranes and the supply ship generator with exhaust gas recirculation (EGR) systems. The HPU and cementing units are older two-stoke engines which are not amenable to these modifications because the engines intake through the block and vent through the valves. The cranes and the supply ship generators are older Caterpillar engines and EGR is not available for these engines. The remaining engines, the MLC compressors and the logging unit engines, are all newer and incorporate EGR in the low NOx design of the engine. Accordingly, the addition of EGR has been judged to be infeasible for all engines.

4.1.2.3 Ignition Timing Retard (ITR)

The extent to which the fuel injection can be retarded to reduce NOx emissions varies for each engine, as ITR can increase exhaust temperatures, which may adversely impact exhaust valve life and turbocharger performance, and extreme levels of ITR may result in combustion instability and a loss of power. In addition, the Brake-specific fuel consumption increases. While the maximum power output of the engine is reduced, this reduction is generally minor. In addition, emissions of hydrocarbons will increase.[4] This increase can be more than offset with a combined use of a diesel particulate filter. The newer engines are not amenable to ITR because these engines have already been optimized as part of the low NOx design. In effect, they incorporate the benefits of ITR in the low NOx design of the engine. The older engines do not have electronic fuel injection systems. Electronic controls are used to sense ambient conditions and engine operation to maximize performance and minimize emissions over a wide range of conditions, such as the transient operation of the engine and extreme ambient temperatures.[5] Due to the loss of power and the lack of electronic controls, this technology would have little, if any, benefit if applied to the HPU units, the cement units, the cranes or the supply ship generators. Accordingly, ITR has been classified as infeasible for all engines.

[3] Personal communication with Clean Cam Technology Systems manufacturer. November, 2009
[4] Proposed Determination of Reasonably Available Control Technology and Best Available Control Technology for Stationary Spark-Ignited Combustion Engines, California Air Resources Board, April, 2001
[5] Final Regulatory Support Document: Control of Emissions from New Marine Compression-Ignited Engines at or Above 30 Liters per Cylinder, USEPA, EPA420-R-03-004, January 2003.

4.1.2.4 Engine Replacement

Because Tier 3 is the most stringent non-road emission standards for engines rated between 75 and 750 brake horsepower-hours, operating with Tier 3 engines would be another emission reduction strategy. The three MLC air compressor engines and the Logging wireline unit engines are all Tier 3 and therefore are not candidates for engine replacement. To replace the cement unit engines with newer Tier 3 engines would require replacement of the entire cementing skid unit. This in turn would require more deck space required and a complete re-install. New Tier 3 engines are larger and will not fit in the existing skid frame. Engine replacement is not considered for the newer engines (the compressor engines and the larger logging unit) because these engines are already Tier 3 and there would be no benefit from replacing with a new unit. Engine replacement is evaluated for the other engines.

4.1.2.5 Selective Catalytic Reduction (SCR)

While SCR is proposed for the main generator sets, several issues have been identified with applying SCR to the smaller air compressor engines, HPUs and other smaller CI engines. The six Caterpillar D399 generator sets (1,325 hp each) provide the primary systems power for drilling and ship utilities and are operational at varying load levels throughout the drilling process. Under normal operating conditions, no more than five engines will operate at one time, leaving one as a spare. For these generators, Shell plans to utilize ~42 percent concentration urea, which corresponds to salt out temperature of approx 40 °F and an exhaust stream temperature to be maintained at 300 to 400°C. For these larger engines, it may be easier to maintain these temperatures due to their operating profile. However, the smaller engines operate on a more intermittent basis with a wide range of loads. The figures above show that the engines are located on deck where space is extremely limited.

The following analysis addresses the application of SCR to these smaller engines:

1. The dynamic loading of the smaller engines (short-term load swings of up to 50 percent) can be expected when these engines are operated. These changing load demands will cause the SCR system to be ineffective at scrubbing NOx emissions from the exhaust gases, because the engines may not be sufficiently loaded to achieve exhaust temperatures necessary for optimal performance of the catalyst. It is estimated that NOx reduction may be as little as 20 percent at exhaust temperatures below 400°F (204 ^{o}C)[6].

[6] Gaitley, J., The Operation of Selective Catalytic Reduction systems on Mobile Offshore Drilling Units, Transocean, September 9m 2009.

2. These engines will be operating under cold climate conditions in the Arctic, and the fact that they are all located on the topsides deck of the rig severely reduces their ability to maintain effectively high temperatures.

3. Urea concentration is directly correlated to salt out temperature. For smaller engines with lower exhaust temperatures, the urea concentration would logically need to increase to get the same NOx emissions reduction as compared to the larger generator engines. If urea was used on deck in the Arctic, it would be extremely difficult to keep the temperatures high enough to stay in solution. If the salt was allowed to precipitate out, there would be a continuous build up of salt on the SCR catalyst and a corresponding increase in engine backpressure, which ultimately could lead to catastrophic damage to the engine. A Catalyst vendor indicated a concern with exposing the catalysts to arctic temperatures without additional insulation and heat tracers.[7]

4. Due to the characteristics described in items 1 to 3 above, there is potential for catalyst fouling and disintegration[1]

5. Ammonia slip can occur when catalyst temperatures are not in the optimal range for the reaction or when too much ammonia is injected into the process. As the temperature range of these smaller diesel engines are lower than that of larger generator diesel sets (such as the D399 Gensets), the effectiveness will be significantly diminished.

6. As shown in Figures 3-1 to 3-3 space on the ship is extremely limited. In addition to retrofitting the engines with the SCR equipment, additional space is required onboard to store the reductant. Also, the logging winch unit is designed to be a space efficient portable system. Due to increasing well depths the unit has been upgraded from 128 HP Detroit Diesel 4-71N non-tiered engine to a 250 HP Caterpillar C7 Tier 3 engine in the same space. The addition of turbochargers, charge air coolers, and larger silencers left no room for a SCR without a total redesign. As shown in Figures 3-1 to 3-3, space is extremely limited for all the other smaller engines as well. Furthermore, taking additional deck space for storage of reductants and other equipment would compromise the maneuverability during drilling operations. Attached is a drawing of the catalyst size and a drawing of the SCR injection system for the C-15 compressor engine[8]. As shown on the drawing each compressor engine would need to be retrofitted with the Catalyst and each engine would require the SCR injection system which measures approximately 5.5 ft x 3.5 ft. As shown in Figure 3-1, there is virtually no additional space that would accommodate these requirements.

7. The supply of urea for an SCR system to support the MLC Compressor engines would require a 1000 gallon storage tank. The urea would need to be purchased in

[7] Personal conversation with Jeremy Harris of Johnson Matthey on November 24, 2009.
[8] Quote from Johnson Matthey by Jeremy Harris on November 24, 2009. See attached drawings and associated costs.

700 gallon quantities. Basically the urea flow rate is 1.1 gallons per hour. A 1000 gallon tank would allow for 900 hours of operation or 37 days at full load. Because one would not want to run the tank dry, one must replenish the tank at least once during the 63 day operating period. Further the space requirements for the storage tank (6.5 ft x 4.0 ft) are not adequate.

SCR technology does not represent BACT for the MLC compressor engines and other smaller engines. This conclusion is based primarily on the lack of space required for retrofitting the engines with SCR catalysts and injection systems. Furthermore, additional issues related to the operation of these systems in arctic conditions raised issues with operation of the catalysts in cold temperatures without additional insulation and heat tracers. Finally, even if sufficient space were available, the cost-effectiveness would be at the upper end of the acceptable cost-effectiveness for NOx technologies

4.1.2.6 NOx Adsorber

Applications of this technology have successfully achieved Tier 2, Bin 5 NOx emissions levels on light duty vehicles using 15 ppmv sulfur fuel. However we are not aware of any marine applications for this technology. At this time, Johnson Matthey is just starting to look at this technology for stationary applications.[9] Accordingly, this technology is not commercially available for stationary applications, particularly in a marine environment. Additionally, there may be a need for a second adsorber so that regeneration can occur while the second adsorber is placed into operation. Finally, additional storage would be required for chemicals. The second adsorber plus storage for chemicals would require additional space onboard the Discoverer.

There are no vendors that market this technology for stationary applications, particularly marine applications. NOx adsorber technology is not commercially available for the MLC engines and other smaller engines and therefore does not represent BACT for these engines

4.1.2.7 Lean NOx Catalysts (LNC) or Hydrocarbon-SCR (HC SCR)

While the Lean NOx Catalyst systems have performed well in some retrofit applications it has been primarily used in on-road diesel applications. The technology has been used in off-road applications to comply with EPA Tier 1 requirements on engines of 100 hp or greater. It has also been installed on backhoes, graders, wheel loaders and back-up generators. However we

[9] Personal communication with Jack Carroll of Johnson Matthey on November 9, 2009

are not aware of any marine applications at this time. Typical reductions for offroad diesel equipment have ranged from 10% to 25%[10]

There have been very few stationary applications of the Cleaire Lean Nox technology and while there are no technical reasons the technology would not work, representatives of the company indicated their technology would be more of a demonstration project for this application. Additionally, the application would require an increase in the tail pipe run to approximately a 36 to 48 inch exhaust and would be subject to cooling which would reduce the effectiveness of the systems. Furthermore the lack of available space and the need for technical support during the demonstration of this technology in this application would be difficult to overcome. Cleaire representatives indicated it would not recommend the Longview system as commercial for this application[11]

Neither the Lean NOx Catalysts (LNC) or the HC SCR technology is commercially available for the MLC engines and other smaller engines and therefore does not represent BACT for these engines. Neither of these systems offers the same performance as ammonia-based SCR systems. Depending on the system, a post-injection system may need to be supplemented by a separate fuel injection system. The potential NOx reductions range from 30% to 50%.

4.1.2.8 Summary of Alternatives Determined to be Technically Feasible

The following is a list of the technically feasible NO_X control technologies and possible combinations:

- Cam Shaft Cylinder Reengineering Kit for the HPU and larger cementing units only.
- Engine Replacement with new Tier 3 engines for those not already Tier 3.

4.1.3 Effectiveness of Remaining Alternatives

This section describes the remaining technologies in more detail and ranks them by effectiveness.

4.1.3.1 Cam Shaft Cylinder Reengineering Kit

The manufacturer states that Version I of the CCTS retrofit kit, which are applicable to use on some of the HPUs and Cementing Unit engines, can achieve emission reductions of no greater

[10] WRAP Offroad Diesel Retrofit Guidance Document, Volume 2-Section IV, Emissions Advantage, LLC, November 18,2005
[11] Personal Communication with Tom Swenson of Cleaire on November 19, 2009

than 1.0 g/bhp-hr of hydrocarbons, 8.5 g/bhp-hr of carbon monoxide, 5.8 g/bhp-hr of nitrogen oxides and 0.16 g/bhp-hr of diesel particulate matter. These claims have been verified by emission testing. However, there is a possible fuel penalty of 0 to 12 percent depending on the rebuild configuration due to the installation of the Cam Shaft Cylinder Reengineering Kit.

4.1.3.2 Engine Replacement

Replacing engines in some cases is an option while in others it is not an option due to the fact that the entire unit must be replaced. Replacing the engine is referred to as repowering and replacing the entire unit is referred to as replacement. For example, repowering the cement unit engines with newer Tier 3 engines would require replacement of the entire cementing skid unit. This in turn would require more deck space required and a complete re-install. The newer engines are larger with larger transmissions and will not fit in the existing skid frame. While the HPU units can be repowered, additional effort would be necessary to attach all the necessary hydraulic lines and other associated equipment.

4.1.3.3 Ranking of Remaining Alternatives by Effectiveness

The remaining technologically feasible control technologies ranked in decreasing order of effectiveness are:

- Engine Replacement
- Camshaft Cylinder Reengineering Kit

4.1.4 Cost-Effectiveness Analysis

The cost and cost effectiveness of the various technologies is discussed in this section. The cost effectiveness is in dollars per ton of pollutant reduced. The control technology costs are based on both information received from technology vendors and from published reports on the technologies. In some cases the cost was obtained from Shell. The sources of the cost and cost effectiveness are documented.

4.1.4.1 Cam Shaft Cylinder Reengineering Kit

The cost of the CCTS retrofit kit varies by the size of the engine, but is generally small. However, the cost of the kits is not the major cost of the engine rebuild. The major cost is associated with providing the technicians and mechanics to the site to extract the engine and ship it to and from the Discoverer and the engine shop. The cost of the actual kits varies between $4800 and $7500 for a 400hp engine, and between $4000 and $6100 for a 275hp

engine. However, the additional cost for shipping and logistics is estimated by Shell to be $50,000. According to the manufacturer, using this product does not affect the OEM engine warranty.[12] The retrofit is usually done by shipping the engines to the CCTS manufacturer or by shipping both the engines and the kit to a local shop. In addition to the capital costs, there are costs associated with increased fuel usage. The annualized cost for the CAM kit for the HPU engines is $16,202 per ton of NOx. For the Cementing unit engine, the annualized cost is $12,206 per ton of NOx.

4.1.4.2 Engine Replacement

Engine replacement has not been evaluated for cost for the new Tier 3 engines because replacement would not result in any lower emissions.

The cost for replacement of the cementing units has been estimated by Shell to exceed 1.6 million dollars to replace all three engines. The two larger cementing units would cost $656,059 each, while the smaller unit would cost $287,882. The cost-effectiveness for this option would be $44,700 per ton of NOx for the cementing engines[13].

To replace the HPU units with newer Tier 3 engines would cost $100,000 for each of the two Detroit 8V71 engines.[14] The cost-effectiveness for this option would be $8,700 per ton of NOx reduced. Overall NOx reductions would be 1.4 tons per year per engine or a total of 2.8 tons for both HPU engines.

Replacing the crane engines would be even less cost-effective. Smith Power Products provided a cost estimate of $65,000 each to replace the crane engines. Shell further estimates an additional $35,000 would be necessary for each engine for shipping and labor to perform the engine replacement. The net result is of $25,800 per ton of NOx reduced. Overall NOx reductions would be 0.48 tons per year for each engine or a total of 0.96 tons total for both cranes.

The current logging generator is Tier 2. A Tier 3 engine is available at a cost of $20,000 to 25,000. Based on annual NOx emissions of less than 0.05 tons, the cost per ton of NOx removed is over $55,000 if achieved through repowering.

---

[12] ARB study: http://www.arb.ca.gov/diesel/documents/rrpapp9.pdf

[13] Proposed Requirements for Stationary Diesel In-Use Agricultural Engines, Appendix F, Economic Analysis Methodology, Diesel Engine Costs, Page 3, September 6, 2006

Replacing the engine on the supply ship with a Tier 3 unit would not result in significant emissions reduction because the supply ship is only attached to the Discoverer for 96 hours per year. The net emission reduction is only 0.17 tons per year of NOx. The cost of a new engine is estimated at $50,000 with an annualized cost of $6,165. The cost effectiveness for repowering exceeds $36,000 per ton of NOx..

In conclusion, none of the engine replacement options evaluated are less than $8,000 per ton of NOx removed. Given the very small quantity of NOx that would be eliminated by these engine replacements, engine replacement is not cost effective and not BACT.

4.1.4.3 Selective Catalytic Reduction (SCR)

SCR has been eliminated on the basis of technical feasibility, but some cost analysis was provided as additional support for the conclusion that SCR is not appropriate for BACT. The cost effectiveness of applying SCR has been calculated by EPA in it's Cost-Effectiveness of Reducing Particulate Matter and Nitrogen Oxides Emissions from Heavy-Duty Non-road Diesel Engines through Retrofits . The cost-effectiveness for non-road equipment was calculated ranging from approximately $7,400 to $19,000 per ton of NOx reduced. For non-road engines the potential NOx reduction was an average of 70 percent. These estimates are based on typical operating conditions for each piece of equipment including generator sets, cranes and excavators. As expected, the cost-effectiveness for NOx was higher for earlier models. However, the cost-effectiveness for older engines (pre-2000) was significantly reduced. This is consistent with calculations of the cost-effectiveness for retrofitting the C-15 compressor engines (engine specifications attached). Based on the costs quoted by Johnson Matthey , the cost-effectiveness for retrofitting SCR for the compressor engines was calculated at $37,000 per ton of NOx reduced. As a further example a 1998 crane engine retrofitted with SCR has a cost-effectiveness of $15,100. The crane engines on the Discoverer were built in 1974. Discussions with the State of Alaska permitting engineers indicates that the State of Alaska has not made BACT decisions with such a high cost-effectiveness for onshore or offshore engines.

[14] Proposed Requirements for Stationary Diesel In-Use Agricultural Engines, Appendix F, Economic Analysis Methodology, Diesel Engine Costs, Page 3, September 6, 2006

4.1.5 Energy and Environmental Considerations

4.1.5.1 Cam Shaft Cylinder Reengineering Kit

The Cam Shaft Cylinder Reengineering Kit is commercially available for certain DDC diesel engines and the emission reduction levels have been tested and verified. This technology is potentially applicable to the two HPU engines and two of three cementing unit engines onboard the Discoverer, but there are problems associated with its application on the Discoverer. The fuel penalty could potentially increase emissions of some pollutants and the Discoverer would need to be taken out of service while this engine retrofit is being performed. This technology is not recommended by Shell as BACT for the current application due to the small potential savings in NOx emissions from these small and infrequently used engines.

4.1.5.2 Exhaust Gas Recirculation (EGR)

A study to retrofit a Cummins engine with EGR and DPF with a cerium-based fuel additive to assist in filter regeneration on a UPS Package car did not achieve its objective[15]. The conclusion of this study was that rigorous application engineering and system integration are needed in order for the system to eliminate DPF face plugging and achieve regeneration, especially in stop-and-go duty cycles characterized by numerous hot restarts and low engine loads. To date, the only EGR/DPF system certified by the California Air Resources Board is for a mobile source application[16] As mentioned above, EGR is not feasible for the older HPU units and cementing units because they are older two-stroke engines and do not have electronic injection systems.

4.1.5.3 Ignition Timing Retard (ITR)

While the newer MLC compressor engines represent Tier 3 technology, ITR is feasible on the older engines particularly the 8V-71 engines used for the HPUs and the Cementing Units. However due to the loss of power and the lack of electronic controls, this technology would have little, if any, improvement in emissions. It should be noted all engines on this rig including Cement Units are mechanically injected making it more difficult to adjust the engines under ambient conditions found in the arctic. It should be pointed out that HC and DPM will increase if only ITR is applied to these engines. ITR and AC reduce NOx at the expense of incomplete combustion; this increases PM, VOC, and CO emissions, reduced fuel economy,

[15] Demonstration of a Diesel Fuel-Borne Catalyst System and Low NOx Control Technology for Reducing Particulate and NOx Emissions, Arthur D. Little, Technical Report FR-00-104, June 28, 2001.
[16] California Air Resources Board, Verification Procedure-Currently Verified, http://www.arb.ca.gov/diesel/verdev/vt/cvt.htm.

and contaminates the lube oil with soot.24 Furthermore, as previously discussed Engines FD-12 through FD-20 will be equipped with CDPF controls to reduce PM and CO emissions. Without electronic fuel injection systems, it would be difficult to achieve the level of control identified for this technology. Due to these energy and environmental considerations, ITR is not considered BACT.

4.1.6 Selection of BACT for NO_X Emissions From Small Diesel Engines

Based on the analysis presented in this section, Shell proposes that BACT for NO_X emissions from small diesel engines be:

- Mud Line Cellar Air Compressors – 3 g/hp-hr achieved through Tier 3 engines.
- Hydraulic Power Units – 9.8 g/hp-hr achieved through good combustion
- Crane Engines – 7.7 g/hp-hr achieved through good combustion
- Large Cementing Units – 11.72 g/hp-hr achieved through good combustion
- Small Cementing Units – 11.72 g/hp-hr achieved through good combustion
- Large Logging Units – 3 g/hp-hr achieved through a Tier 3 engine
- Small Logging Units – 5.6 g/hp-hr achieved through a Tier 2 engine
- Supply Ship Generator – 14 g/hp-hr achieved through good combustion

4.2 EXHAUST PARTICULATE MATTER BACT ANALYSIS

Diesel particulate matter (PM) is a complex mixture of compounds which are formed through a number of different mechanisms. PM is comprised of the soluble organic fraction (SOF), the insoluble (solid) fraction, and the sulfate fraction. Fuel and lube oil contribute to the SOF fraction. The insoluble fraction is primarily dry carbonaceous soot from “too-rich-to-burn” fuel combustion. The sulfate fraction is produced from the sulfur in diesel fuel. This fraction can only be controlled by limiting fuel sulfur content.

In this discussion, we refer to PM generically. Virtually all the diesel PM is PM10, and most of the PM_{10} is assumed to be $PM_{2.5}$.

4.2.1 Identification of Possible Control Alternatives

The available PM control technologies for the *Discoverer's* engines, boilers, and incinerator were determined from searches performed on the RBLC and the CA-BACT, as well as a review of other available technologies.

PM emissions from diesel engines can be reduced with combustion controls that prevent the formation of PM and add-on controls that capture it. Because a portion of the sulfur contained in combusted fuels becomes sulfates, which are particles, PM emissions can also be reduced by reducing the sulfur content of the fuel.

Regardless of the technology applied to achieve BACT, the control option must result in an emission rate no less stringent than the applicable NSPS emission rate, if any NSPS standard for that pollutant is applicable to the source. As discussed above in the NOx BACT analysis, EPA has promulgated exhaust emission standards for non-road engines under 40 CFR 89.112 in 1998. Engines designed to meet Tier 2 or 3 PM emission standards typically employ a combination of low PM emitting engine designs and DPF or CDPF.[17] The overall PM control for Tier 3 engines is 85 percent.[18]

4.2.1.1 Good Combustion Practices, Low Sulfur Fuel (LSF), and Crankcase Ventilation Controls

The concept of applying combustion controls to minimize PM10 emissions includes adequate fuel residence time in the combustion zone, proper fuel-air mixing, and combustion temperature control to ensure the maximum amount of fuel is combusted. Optimization of these factors to reduce PM formation can result in an increase in the NOx emissions. Thus, engines are generally designed to balance control mechanisms to achieve the lowest possible emissions of all pollutants.

LSF reduces the sulfate PM fraction by limiting the amount of sulfur in the fuel that is available for sulfate formation.

The crankcase of a combustion engine accumulates gases and oil mist called blowby that leak into the crankcase from the combustion chamber and other sources. The blowby gases must be vented from the crankcase to prevent damage. Due to the fact that blowby gas contains PM,

[17] Caterpillar brochure. *Cat® C15 for Fleet and Line Haul Performance, ACERT™ Technology for 2007*.
[18] The Tier 3 PM emission standard for large non-road engines is 0.2 g/kWh or 0.15 g/hp-hr. The base case is considered to be approximately 1 g/hp-hr.

which is 100 percent SOF,[19] it should be handled such that it does not contribute to PM emissions. The CCV system was developed to remove blowby from the engine and to prevent those vapors from being expelled into the atmosphere. The CCV system does this by directing the blowby back to the intake manifold, so it can be combusted.

Systems used to control combustion for the purpose of limiting all pollutants and ensuring efficient engine operation are employed on all modern diesel engines, and will be employed on all diesel engines at the source. Furthermore, all diesel engines at the source will burn ultra low sulfur diesel (ULSD) fuel, and be equipped with either a closed circuit crankcase ventilation system or an open system with coalescing filters to control PM emissions from crankcase ventilation if an exhaust port exists on which to attach the control device. Because these control technologies and approaches will be employed, they will be discussed no further in this analysis, and are considered part of the baseline BACT determination.

4.2.1.2 Engine Replacement

Engine replacement would entail removal of the existing engine in favor of a Tier 3 engine.

4.2.1.3 Oxidation Catalyst (OxyCat)

An OxyCat removes the SOF of PM through catalytic oxidation of the combustible organic matter resulting in an overall PM control efficiency of 20-50 percent.[20]

4.2.1.4 Diesel Particulate Filter (DPF)

A DPF removes the insoluble (solid) fraction of PM (soot) by filtration with an overall PM control efficiency of 40 to 50 percent.[21,22]

4.2.1.5 Catalytic Diesel Particulate Filter (CDPF)

CDPFs remove both the SOF and the insoluble fraction of PM with an overall PM control efficiency of 85 percent.[23]

Table 4-2 summarizes the available control technologies and the BACT process.

---

[19] Jaaskelainen, Hannu. DieselNet Technology Guide. *Crankcase Ventilation.* January 2009.
[20] Holmström, Per. D.E.C. Marine AB. [Communication with R. Steen, Air Sciences Inc.]. February 9, 2009.
[21] Khair, Magdi K. DieselNet Technology Guide. *Engine Design for PM Control.* May 2002.
[22] Majewski, Addy W. DieselNet Technology Guide. *Diesel Particulate Filters.* July 2001.
[23] California EPA. Air Resource Board. *Verification Procedure - Currently Verified, CleanAIR Systems PERMIT.* January 26, 2009. http://www.arb.ca.gov/diesel/verdev/vt/cvt.htm

Table4- 2. Summary of PM BACT Analysis for Small Engines

	Engine:	MLC Comp.	HPU	Cranes	Large Cement	Small Cement	Large Logging	Small Logging	Supply Ship Gen.
	Model:	Cat. C15	DD 8V71	Cat D343	DD 8V71	GM 3-71	Cat C7	Deere	Cat 3406
	Size:	540 hp	250 hp	365hp	335 hp	147 hp	250 hp	35 hp	292 hp
	Quantity:	3	2	2	2	1	1	1	2
Option									
Replace	Included?	No	No	No	No	No	No	No	No
	Cost/ton?		$53,278	$576,997	$220,716	$220,716		$509,374	$455,728
CDPF	Included?	No	Yes	Yes	Yes	Yes	No	Yes	No
	Feasible?	Yes					Yes		Yes
	Cost/ton?	$41,883					$90,467		$186,720
OxyCat	Included?	No					No		No
	Feasible?	Yes					Yes		Yes
	Cost/ton?	$32,139					$55,233		$113,999
DPF	Included?	Yes					Yes		No
	Feasible?								Yes
	Cost/ton?								$227,999

"Included" means the technology is currently installed or proposed to be installed.

4.2.2 Technical Feasibility of Control Alternatives

4.2.2.1 Engine Replacement

Tier 2 or 3 level controls and PCV are intrinsic to the original engine design. Therefore, replacement of an engine with one employing these control technologies are considered technically infeasible if they are already a part of the design of the diesel engines. The three MLC compressor (540 hp Caterpillar C-15) engines and the large logging (260 hp Cat C7) engine are already Tier 3 engines. As indicated in the NOx BACT analysis, replacement of an existing engine with a new Tier 3 engine is only practical (and, therefore, technically feasible) for the HPU (250 hp DD 8V71) engines, the crane (365 hp Cat D343) engines, the cementing units (powered by 335 hp DD 8V71 and 147 hp GM 3-71 engines), the logging winch (36 kW John Deere) engine and the supply ship generator (Cat. 292 hp D3406 engine).

4.2.2.2 Oxidation Catalyst (OxyCat)

OxyCats are considered technically feasible for all diesel engines and compressors.

4.2.2.3 Diesel Particulate Filter (DPF)

DPFs are considered technically feasible for all diesel engines and compressors. It should be noted that DPF technology is already incorporated in Tier 3 engines.

4.2.2.4 Catalytic Diesel Particulate Filter (CDPF)

CDPFs are considered technically feasible for all small diesel engines and compressors. CDPF is not feasible for the six generator engines because the increased backpressure adversely affects the SCR .

4.2.3 Effectiveness of Remaining Alternatives

4.2.3.1 Engine Replacement

As stated in the previous section, the only units for which replacement with a Tier 3 unit is technically feasible are the HPU engines, the crane engines, the cementing units (the entire unit, not just the engine, would be replaced), the logging winch engine and the supply ship generator. The expected PM emission reduction associated with each replacement is as follows:

- HPU Compressor Engines (2 X 250 hp DD 8V71) – 0.46 tons per year (tpy), equivalent to a 88 percent reduction
- Crane Engines (2 X 365 hp Cat D343) – 0.043 tpy, equivalent to a 58 percent reduction
- Cementing Units (powered by 2 X 335 hp DD 8V71 and 1 X 147 hp GM 3-71 engines) – 0.89 tpy, equivalent to a 92 percent reduction
- Logging Winch Engine (1 X 36 kW John Deere) – 0.0048 tpy, equivalent to a 50 percent reduction.
- Supply ship Engine Generator (1 X 292 hp Cat. D3406) – 0.01 tpy, equivalent to a 89% reduction

4.2.3.2 Oxidation Catalyst (OxyCat)

An OxyCat removes the SOF of PM through catalytic oxidation of the combustible organic matter resulting in an overall PM control efficiency of 20-50 percent.[24]

4.2.3.3 Diesel Particulate Filter (DPF)

A DPF removes the insoluble (solid) fraction of PM (soot) by filtration with an overall PM control efficiency of 40 to 50 percent.[25,26]

---

[24] Holmström, Per. D.E.C. Marine AB. [Communication with R. Steen, Air Sciences Inc.]. February 9, 2009.
[25] Khair, Magdi K. DieselNet Technology Guide. *Engine Design for PM Control.* May 2002.
[26] Majewski, Addy W. DieselNet Technology Guide. *Diesel Particulate Filters.* July 2001.

4.2.3.4 Catalytic Diesel Particulate Filter (CDPF)

CDPFs remove both the SOF and the insoluble fraction of PM with an overall PM control efficiency of 85 percent.[27]

4.2.3.5 Ranking of Remaining Alternatives by Effectiveness

The remaining technologically feasible control technologies ranked in decreasing order of effectiveness are:

- Engine Replacement (50 – 95 percent reduction, depending on engine)
- CDPF (85 percent reduction)
- OxyCat (20 - 50 percent reduction)
- DPF (40 – 50 percent reduction)

4.2.4 Cost-Effectiveness Analysis

4.2.4.1 Engine Replacement

The cost effectiveness of replacing existing engines or units with Tier 3 equivalents varies depending upon the engine or unit. The cost effectiveness associated with each replacement is as follows:

- HPU Compressor Engines (2 X 250 hp DD 8V71) – $53,300/ton PM
- Crane Engines (2 X 365 hp Cat D343) – $577,000/ton PM
- Cementing Units (powered by 2 X 335 hp DD 8V71 and 1 X 147 hp GM 3-71 engines) – $221,000/ton PM
- Logging Winch Engine (1 X 36 kW John Deere) – $509,000/ton PM
- Supply Ship Engine Generator (1 X 292 hp Cat. D3406) - $456,000/ton PM

Although replacement of engines or units with Tier 3 equivalents is technically feasible for some engines, and would result in PM emission reductions, the reductions are small compared to the expense of the engine replacement. Engine replacement is not a cost-effective PM control strategy.

[27] California EPA. Air Resource Board. *Verification Procedure - Currently Verified, CleanAIR Systems PERMIT*. January 26, 2009. http://www.arb.ca.gov/diesel/verdev/vt/cvt.htm

4.2.4.2 Catalytic Diesel Particulate Filter (CDPF)

Shell proposes to install CDPF on all small diesel engines and diesel compressors that are not already Tier 3 engines (i.e., the 549 hp MLC compressor engines and the 250 hp logging engines) except for the supply ship generator. Cost effectiveness calculations have been performed for the addition of CDPF to the MLC Compressors engines, the 250 hp logging engine and the supply ship generator.

- MLC Compressor Engines (3 X 1325 hp Cat. D399) - $41,900/ton PM
- Logging Generator Engine (1 X 250 hp Cat C7) - $90,000/ton PM
- Supply Ship Engine Generator (1 X 292 hp Cat D3406) - $187,000/ton PM

Although addition of CDPF to the Tier 3 engines or the supply ship is technically feasible, and would result in PM emission reductions, the reductions are small compared to the expense of the CDPF addition, thus, CDPF addition is not a cost-effective PM control strategy.

4.2.4.3 Oxidation Catalyst (OxyCat)

Because a more stringent PM control technologies (CDPF) has been proposed as BACT for all small diesel engines and diesel compressors except the Tier 3 engines and the supply ship, no cost-effectiveness analysis was developed for OxyCat for any of the engines except the Tier 3 and Supply ship.

- MLC Compressor Engines (3 X 1325 hp Cat. D399) - $32,100/ton PM
- Logging Generator Engine (1 X 250 hp Cat C7) - $55,200/ton PM
- Supply Ship Engine Generator (1 X 292 hp Cat D3406) - $114,000/ton PM

Although addition of OxyCat to the Tier 3 engines and supply ship is technically feasible, and would result in PM emission reductions, the reductions are small compared to the expense of the OxyCat addition, thus, OxyCat addition is not a cost-effective PM control strategy.

4.2.4.4 Diesel Particulate Filter (DPF)

Because a more stringent PM control technologies (Tier 3 engines or CDPF) has been proposed as BACT for all small diesel engines and diesel compressors except the supply ship, no cost-effectiveness analysis was developed for DPF for any of the engines except the Supply ship.

- Supply Ship Engine Generator (1 X 292 hp Cat D3406) - $228,000/ton PM

Although addition of DPF to the supply ship is technically feasible, and would result in PM emission reductions, the reductions are small compared to the expense of the DPF addition, thus, DPF addition is not a cost-effective PM control strategy.

4.2.5 Selection of BACT for PM Emissions From Small Diesel Engines

Based on the analysis presented in this section, Shell proposes that BACT for PM emissions from small diesel engines and diesel compressor be as follows:

- Mud Line Cellar Air Compressors – 0.082 g/hp-hr, achieved using the existing Tier 3 engines.
- Hydraulic Power Units – 0.19 g/hp-hr, achieved using CDPF
- Crane Engines – 0.053 g/hp-hr, achieved using CDPF
- Cementing Units – 0.29 g/hp-hr, achieved using CDPF
- Logging Unit – 0.082 g/hp-hr, achieved using the existing Tier 3 engine.
- Logging Winch Unit – 0.067 g/hp-hr, achieved using CDPF
- Supply Ship Engine Generator – 0.98 g/hp-hr, achieved through good combustion

Appendix – Cost Effectiveness Calculations and Communication Records

Engine Replacement

Fields	Value	References
HC to ROG Conversion	1.26639	
grams per ton	907184.14	
Shipping Cost (one way)	$15,000	Shell
On-site Labor	$20,000	Shell

Cost estimate given by Shell

HPU	175-300 HP		Assumptions and References
	Tier 0 Baseline	Tier 3 Engines	
NOx Emission Std (g/bhp-hr)	9.81	2.99	Offroad Engine Emission Standards http://www.epa.gov/otaq/standards/nonroad/nonroadci.htm
PM Emission Std (g/bhp-hr)	1.26	0.15	
HC Emission Std (g/bhp-hr)	0	0.15	
Average Horsepower (hp)	250	250	Permit Application
Load Factor	0.50	0.50	Assume 50% load
Activity (hr/yr)	1,512	1,512	Assume 24 hr/day operation for 63 days
Incremental Capital Cost		$ 100,000	Shell esimate
Shipping + Labor Cost		$ -	Shell esimate
Useful Life (years)	10	10	
Annualized Capital Cost ($/yr)		$12,329	4% interest
NOx Emission Factor (g/hr)	1226	373	
PM Emission Factor (g/hr)	158	19	
HC Emission Factor (g/hr)	0	19	
NOx (tons/year)	2.04	0.62	
PM (tons/year)	0.26	0.03	
HC (tons/year)	-	0.03	
NOx Reduction (tons/year)		1.42	
PM Reduction (tons/year)		0.23	
HC Reduction (tons/year)		-	
Cost-Effectiveness NOx ($/ton)		***$8,671***	
Cost-Effectiveness PM ($/ton)		***$53,278***	

Cementing Units Unit Replacement	100-175 HP		300-600 HP		Assumptions and References
	Tier 0 Baseline	Tier 3 Engines	Tier 0 Baseline	Tier 3 Engine	
NOx Emission Std (g/bhp-hr)	11.72	2.99	11.72	2.99	Offroad Engine Emission Standards http://www.epa.gov/otaq/standards/nonroad/nonroadci.htm
PM Emission Std (g/bhp-hr)	1.92	0.15	1.92	0.15	
HC Emission Std (g/bhp-hr)	0	0.15	0	0.15	
Average Horsepower (hp)	147	147	335	335	Permit Application
Load Factor	0.5	0.5	0.50	0.50	Assume 50% load
Activity (hr/yr)	1121	1121	1121	1121	Assume 27.8% per day operation for 168 days
Incremental Capital Cost		$ 287,882		$ 656,059	Shell esimates $1.6M for 3 units
Useful Life (years)	10	10	10	10	
Annualized Capital Cost ($/yr)		$35,493		$80,886	4% interest
NOx Emission Factor (g/hr)	861	219	1963	500	
PM Emission Factor (g/hr)	141	11	322	25	
HC Emission Factor (g/hr)	0	11	0	25	
NOx (tons/year)	1.06	0.27	2.43	0.62	
PM (tons/year)	0.17	0.01	0.40	0.03	
HC (tons/year)	-	0.01	-	0.03	
NOx Reduction (tons/year)		0.79		1.81	
PM Reduction (tons/year)		0.16		0.37	
HC Reduction (tons/year)		-		-	
Cost-Effectiveness NOx ($/ton)		***$44,744***		***$44,744***	
Cost-Effectiveness PM ($/ton)		***$220,716***		***$220,716***	

Cranes	300-600 HP		Assumptions and References
	Tier 0 Baseline	Tier 3 Engines	
NOx Emission Std (g/bhp-hr)	7.7	2.99	Offroad Engine Emission Standards http://www.epa.gov/otaq/standards/nonroad/nonroadci.htm
PM Emission Std (g/bhp-hr)	0.36	0.15	
HC Emission Std (g/bhp-hr)	0	0.15	
Average Horsepower (hp)	365	365	Permit Application
Load Factor	0.50	0.50	Variable, here assume 50% load
Activity (hr/yr)	504	504	Assume 8 hr/day operation for 63 days
Incremental Capital Cost		$ 65,000	Smith Power Products (Capital Cost + Installation)
Shipping + Labor Cost		$ 35,000	
Useful Life (years)	10	10	

Annualized Capital Cost ($/yr)		$12,329	4% interest
NOx Emission Factor (g/hr)	1405	545	
PM Emission Factor (g/hr)	66	27	
HC Emission Factor (g/hr)	0	27	
NOx (tons/year)	0.78	0.30	
PM (tons/year)	0.04	0.02	
HC (tons/year)	-	0.02	
NOx Reduction (tons/year)		0.48	
PM Reduction (tons/year)		0.02	
HC Reduction (tons/year)		-	
Cost-Effectiveness NOx ($/ton)		***$25,790***	
Cost-Effectiveness PM ($/ton)		***$576,997***	

Small Logging Generator	**37kw - 56 kw**		**Assumptions and References**
	Tier 2 Baseline	**Tier 3 Engines**	
NOx Emission Std (g/bhp-hr)	5.60	3.51	Offroad Engine Emission Standards http://www.epa.gov/otaq/standards/nonroad/nonroadci.htm with CDPF
PM Emission Std (g/bhp-hr)	0.45	0.22	
HC Emission Std (g/bhp-hr)			
Average Horsepower (hp)	35	35	Permit Application
Load Factor	0.50	0.50	Variable, here assume 50% load
Activity (hr/yr)	1121	1,121	Based on Cementing Units
Incremental Capital Cost		$ 20,000	Smith Power Products (Capital Cost + Installation)
Shipping + Labor Cost			
Useful Life (years)	10	10	
Annualized Capital Cost ($/yr)		$2,466	4% interest
NOx Emission Factor (g/hr)	98	61	
PM Emission Factor (g/hr)	8	4	
HC Emission Factor (g/hr)	0	0	
NOx (tons/year)	0.12	0.08	
PM (tons/year)	0.01	0.00	
HC (tons/year)	-	-	
NOx Reduction (tons/year)		0.05	
PM Reduction (tons/year)		0.00	
HC Reduction (tons/year)		-	
Cost-Effectiveness NOx ($/ton)		***$54,576***	
Cost-Effectiveness PM ($/ton)		***$509,374***	

Supply ship Generator	**300-600 HP**		**Assumptions and References**
	Tier 0 Baseline	**Tier 3 Engines**	
NOx Emission Std (g/bhp-hr)	14.00	2.99	Offroad Engine Emission Standards http://www.epa.gov/otaq/standards/nonroad/nonroadci.htm
PM Emission Std (g/bhp-hr)	0.98	0.10	
HC Emission Std (g/bhp-hr)	0	0.15	
Average Horsepower (hp)	292	292	Permit Application
Load Factor	0.50	0.50	Variable, here assume 50% load
Activity (hr/yr)	96	96	Based on Cementing Units
Incremental Capital Cost		$ 50,000	Smith Power Products (Capital Cost + Installation)
Shipping + Labor Cost			
Useful Life (years)	10	10	
Annualized Capital Cost ($/yr)		$6,165	4% interest
NOx Emission Factor (g/hr)	2044	436	
PM Emission Factor (g/hr)	143	15	
HC Emission Factor (g/hr)	0	22	
NOx (tons/year)	0.22	0.05	
PM (tons/year)	0.02	0.00	0.10660981
HC (tons/year)	-	0.00	
NOx Reduction (tons/year)		0.17	
PM Reduction (tons/year)		0.01	
HC Reduction (tons/year)		-	
Cost-Effectiveness NOx ($/ton)		***$36,224***	
Cost-Effectiveness PM ($/ton)		***$455,728***	

SCR Retrofits

Fields	Value	References
Cost of diesel (per gallon)	$2.79	http://tonto.eia.doe.gov/dnav/pet/pet_pri_gnd_dcus_nus_w.htm
Urea Cost (per gallon)	$3.00	Johnson and Matthey
NOx Reduction	70%	EPA Study (Nonroad Diesel Retrofit study)
PM Reduction	0%	
HC Reduction	0%	
HC to ROG Conversion	1.26639	
grams per ton	907184.14	
Cost of SCR system with initial catalyst installed	$85,000	Johnson and Matthey
Cost of Installation	$110,000	Johnson and Matthey
Cost of Catalyst (catalysit will be replaced at 6 years)	$8,000	Johnson and Matthey
Cost of Catalyst Maintenace (per year)	$7,500	Johnson and Matthey
Lifetime of Catalyst (years)	6	Johnson and Matthey
Urea Flow Rate (gal/hr) at full load	1.1	Johnson and Matthey
Shipping Cost (two way)		It is uncertain whether shipping and on-site labor are included
On-site Labor		in the Cost of installation above, so we have assumed $0 here.

MLC Air Compressors	300-600 HP		Assumptions and References
	Tier 3 Baseline	SCR	
NOx Emission Std (g/bhp-hr)	2.99	0.90	Offroad Engine Emission Standards http://www.epa.gov/otaq/standards/nonroad/nonroadci.htm
Average Horsepower (hp)	540	540	Permit Application
Load Factor	0.50	0.50	Assume 50% load
Activity (hr/yr)	1,512	1,512	Assume 24 hr/day operation for 63 days
Energy Consumption Factor (bhp-hr/gal)	19.1	19.1	
Fuel Usage (gal/yr)	42,748	42,748	
Urea Usage (gal/yr)		832	Assume linear relationship between load and urea usage
Fuel + Urea Cost ($/yr)	119,138	121,632	
Incremental Urea Fuel Cost/yr		$2,495	This is just urea cost = ($3/gal)(832 gal) <== Fuel is the same
Shipping + Labor Cost		$0	Assumed included - see note above
Cost system, installation and initial catalyst		$195,000	= Cost SCR system + Cost of Installation
Catalyst Replacement Cost		$5,333	= (4/6)(cost of catalyst) <=== Replaced catalyst has 4 years in proj.
ApplicableLife of replacement catalyst (years)		4	Catalyst lasts 6 years, but only 4 years applied to project
Total Capital Cost		$200,333	System (w/ catalyst) + installation + catalyst replacement
Useful Life (years)		10	
Annualized Capital Cost ($/yr)		$24,699	4% interest [Excel PMT function: -PMT(0.04,10,200333)]
Maintenance Cost Per year		$7,500	
Annual Cost		$34,694	Annualized Capital Cost + Maintenance + Incremental Urea
NOx Emission Factor (g/hr)	806	242	
NOx (tons/year)	1.34	0.40	
NOx Reduction (tons/year)		0.94	
Cost-Effectiveness, SCR only ($/ton)		$34,243	
CE Including Fuel & Urea ($/ton)		***$36,896***	

Cam Shaft Cylinder Reengineering Kit

Fields	Value	References
Cost of diesel:	$2.79	http://tonto.eia.doe.gov/dnav/pet/pet_pri_gnd_dcus_nus_w.htm
Incremental Fuel Consumption	12%	http://www.arb.ca.gov/diesel/documents/rrpapp9.pdf
HC to ROG Conversion	1.26639	
Grams per Ton	907184.74	
Shipping Cost (two way)	$30,000	Shell
On-site Labor	$20,000	Shell

HPU	175-300 HP		Assumptions and References
	Tier 0 Baseline	CCTS	
NOx Emission Std (g/bhp-hr)	9.81	5.8	Offroad Engine Emission Standards
PM Emission Std (g/bhp-hr)	0.42	0.16	http://www.epa.gov/otaq/standards/nonroad/nonroadci.htm
HC Emission Std (g/bhp-hr)	0.00	1.00	CCTS EF: CARB certification claims
Average Horsepower (hp)	250	250	Permit Application
Load Factor	0.5	0.5	Assume 50% load
Activity (hr/yr)	1512	1512	Assume 24 hr/day operation for 63 days
Energy Consumption Factor (bhp-hr/gal)	19.1	19.1	
Fuel Usage (gal/yr)	19791	22165	Fuel penalty ranges between 0%-12%; assume worst case of 12%
Fuel Cost ($/yr)	55,156	61,775	
Incremental Fuel Cost/yr		$6,619	
Incremental Capital Cost		$6,100	http://www.arb.ca.gov/diesel/documents/rrpapp9.pdf
Shipping + Labor		$50,000	Shell
Useful Life (years)	10	10	
Annualized Capital Cost ($/yr)		$6,917	4% interest
NOx Emission Factor (g/hr)	1226	725	
PM Emission Factor (g/hr)	53	20	
HC Emission Factor (g/hr)	0	125	
NOx (tons/year)	2.04	1.21	
PM (tons/year)	0.09	0.03	
HC (tons/year)	-	0.21	
NOx Reduction (tons/year)		0.84	
PM Reduction (tons/year)		0.06	
HC Reduction (tons/year)		(0.21)	
NOx Cost-Effectiveness		***$16,202***	

Cementing Units	300-600 HP		Assumptions and References
	Tier 0 Baseline	CCTS	
NOx Emission Std (g/bhp-hr)	9.81	5.8	Offroad Engine Emission Standards
PM Emission Std (g/bhp-hr)	0.41	0.16	http://www.epa.gov/otaq/standards/nonroad/nonroadci.htm
HC Emission Std (g/bhp-hr)	0.00	1.00	CCTS EF: CARB certification claims
Average Horsepower (hp)	335	335	Permit Application
Load Factor	0.5	0.5	Assume 50% load
Activity (hr/yr)	1121	1121	Assume 27.8% per day operation for 168 days
Energy Consumption Factor (bhp-hr/gal)	19.1	19.1	
Fuel Usage (gal/yr)	19660	22019	
Fuel Cost ($/yr)	54,792	61,367	
Incremental Fuel Cost/yr		$6,575	
Incremental Capital Cost		$7,500	http://www.arb.ca.gov/diesel/documents/rrpapp9.pdf
Shipping + Labor		$50,000	Shell
Useful Life (years)	10	10	4% interest
Annualized Capital Cost ($/yr)		$7,089	
NOx Emission Factor (g/hr)	1643	972	
PM Emission Factor (g/hr)	69	27	
HC Emission Factor (g/hr)	0	168	
NOx (tons/year)	2.74	1.62	

PM (tons/year)	0.11	0.04	
HC (tons/year)	-	0.28	
NOx Reduction (tons/year)		1.12	
PM Reduction (tons/year)		0.07	
HC Reduction (tons/year)		(0.28)	
NOx Cost-Effectiveness		***$12,206***	

CDPF Addition to Specific Engines

Fields	Value	References
grams per ton	907184.14	

MLC Air Compressors	300-600 HP		Assumptions and References
	Tier 3 Baseline	CDPF	
			Offroad Engine Emission Standards
PM Emission Std (g/bhp-hr)	0.15	0.02	http://www.epa.gov/otaq/standards/nonroad/nonroadci.htm
			and 85% control assumed for CDPF
Average Horsepower (hp)	540	540	Permit Application
Load Factor	0.50	0.50	Assume 50% load
Activity (hr/yr)	1,512	1,512	Assume 24 hr/day operation for 63 days
Incremental Capital Cost		$19,491	Use cost for Cementing Unit
Useful Life (years)	10	10	
Annualized Capital Cost ($/yr)		$2,403	4% interest
PM Emission Factor (g/hr)	41	6	
PM (tons/year)	0.07	0.01	
PM Reduction (tons/year)		0.06	
Cost-Effectiveness PM ($/ton)		***$41,883***	

Supply ship Generator	300-600 HP		Assumptions and References
	Tier 0 Baseline	CDPF	
			AP-42 Table 3.3-1, 10/96 [0.31 lb/MMBtu and heat rate of 7,000 Btu/hp-hr]
PM Emission Std (g/bhp-hr)	0.98	0.15	(0.31 lb/MMBtu)(0.007 MMBtu/hp-hr)(453.59 g/lb) = 0.9843 g/hp-hr
			and 85% control for CDPF
Average Horsepower (hp)	292	292	Permit Application
Load Factor	0.50	0.50	Variable, here assume 50% load
Activity (hr/yr)	96	96	Based on Cementing Units
Incremental Capital Cost		$ 19,491	Use cost for cementing unit
Useful Life (years)	10	10	
Annualized Capital Cost ($/yr)		$2,403	4% interest
PM Emission Factor (g/hr)	143	21	
PM (tons/year)	0.02	0.00	0.15
PM Reduction (tons/year)		0.01	
Cost-Effectiveness PM ($/ton)		***$186,720***	

Large Logging Engine (winch)	175-300 HP		Assumptions and References
	Tier 3 Baseline	CDPF	
			Offroad Engine Emission Standards
PM Emission Std (g/bhp-hr)	0.15	0.02	http://www.epa.gov/otaq/standards/nonroad/nonroadci.htm
			and 85% control assumed for CDPF
Average Horsepower (hp)	250	250	Permit Application
Load Factor	0.50	0.50	Assume 50% load
Activity (hr/yr)	1121	1,121	Assume 24 hr/day operation for 63 days
Incremental Capital Cost		$19,491	Use cost for Cementing Unit
Useful Life (years)	10	10	
Annualized Capital Cost ($/yr)		$2,403	4% interest
PM Emission Factor (g/hr)	19	3	
PM (tons/year)	0.03	0.00	
PM Reduction (tons/year)		0.03	
Cost-Effectiveness PM ($/ton)		***$90,467***	

OxyCat Addition to Specific Engines

Fields	Value	References
grams per ton	907184.14	

MLC Air Compressors	300-600 HP		Assumptions and References
	Tier 3 Baseline	OxyCat	
			Offroad Engine Emission Standards
PM Emission Std (g/bhp-hr)	0.15	0.08	http://www.epa.gov/otaq/standards/nonroad/nonroadci.htm
			and 50% control for OxyCat
Average Horsepower (hp)	540	540	Permit Application
Load Factor	0.50	0.50	Assume 50% load
Activity (hr/yr)	1,512	1,512	Assume 24 hr/day operation for 63 days
Installation Cost		$5,000	Environ Estimate
Incremental Capital Cost		$3,798	LADCO Report
Useful Life (years)	10	10	
Annualized Capital Cost ($/yr)		$1,085	4% interest
PM Emission Factor (g/hr)	41	20	
PM (tons/year)	0.07	0.03	
PM Reduction (tons/year)		0.03	
Cost-Effectiveness PM ($/ton)		***$32,139***	

Supply ship Generator	300-600 HP		Assumptions and References
	Tier 0 Baseline	OxyCat	
			AP-42 Table 3.3-1, 10/96 [0.31 lb/MMBtu and heat rate of 7,000 Btu/hp-hr]
PM Emission Std (g/bhp-hr)	0.98	0.49	(0.31 lb/MMBtu)(0.007 MMBtu/hp-hr)(453.59 g/lb) = 0.9843 g/hp-hr
			and 50% control for OxyCat
Average Horsepower (hp)	292	292	Permit Application
Load Factor	0.50	0.50	Variable, here assume 50% load
Activity (hr/yr)	96	96	Based on Cementing Units
Installation Cost		$5,000	Environ Estimate
Incremental Capital Cost		$ 2,000	LADCO Report
Useful Life (years)	10	10	
Annualized Capital Cost ($/yr)		$863	4% interest
PM Emission Factor (g/hr)	143	72	
PM (tons/year)	0.02	0.01	0.5
PM Reduction (tons/year)		0.01	
Cost-Effectiveness PM ($/ton)		***$113,999***	

Large Logging Engine (winch)	175-300 HP		Assumptions and References
	Tier 3 Baseline	OxyCat	
			Offroad Engine Emission Standards
PM Emission Std (g/bhp-hr)	0.15	0.08	http://www.epa.gov/otaq/standards/nonroad/nonroadci.htm
			and 50% control for OxyCat
Average Horsepower (hp)	250	250	Permit Application
Load Factor	0.50	0.50	Assume 50% load
Activity (hr/yr)	1121	1,121	Assume 24 hr/day operation for 63 days
Shipping Plus Labor		$5,000	
Incremental Capital Cost		$2,000	LADCO Report
Useful Life (years)	10	10	
Annualized Capital Cost ($/yr)		$863	4% interest
PM Emission Factor (g/hr)	19	9	
PM (tons/year)	0.03	0.02	
PM Reduction (tons/year)		0.02	
Cost-Effectiveness PM ($/ton)		***$55,233***	

DPF Addition to Specific Engines

Supply ship Generator	300-600 HP		Assumptions and References
	Tier 0 Baseline	Tier 3 + DPF	
			AP-42 Table 3.3-1, 10/96 [0.31 lb/MMBtu and heat rate of 7,000 Btu/hp-hr]
PM Emission Std (g/bhp-hr)	0.98	0.49	(0.31 lb/MMBtu)(0.007 MMBtu/hp-hr)(453.59 g/lb) = 0.9843 g/hp-hr
			and 50% control for DPF
Average Horsepower (hp)	292	292	Permit Application
Load Factor	0.50	0.50	Variable, here assume 50% load
Activity (hr/yr)	96	96	Based on Cementing Units
Incremental Capital Cost		$ 9,000	LADCO Report
Installation Cost		$ 5,000	Environ Estimate
Useful Life (years)	10	10	
Annualized Capital Cost ($/yr)		$1,726	4% interest
PM Emission Factor (g/hr)	143	72	
PM (tons/year)	0.02	0.01	0.5
PM Reduction (tons/year)		0.01	
Cost-Effectiveness PM ($/ton)		***$227,999***	

RECORD of CONVERSATION
And DOCUMENTATION OF INFORMATION from
BASF

From: Lan Ma
Sent: Monday, December 07, 2009 7:16 PM
To: 'mike.durilla@basf.com'
Subject: RE: NOx Emission Reduction Catalyst Inquiry

Dear Mike,

Thank you for calling me today and explaining to me the different SCR systems. I was asked to document our discussion for reference. Would you confirm for me the following bullet points as what we had discussed? I also have a couple more questions at the bottom and would really appreciate your time helping with the answer.

- Regardless of the control injection (hydrogen gas, HC, fuel, ammonia, others), space is needed for storage
- The HC-SCR system is relatively inefficient; NOx reduction was only about 30%-40% for an automotive engine
- One feasibility issue with SCR is the sulfur level of the fuel, since high PM in exhaust can clog on the catalyst and lower the performance of a SCR
- The right stoichiometric ratio of control injection to NOx emission is important; some engines manufacturers provide a load map to predict NOx and use the load map to adjust the rate of control injection, but the load map may not hold as the engine ages.

I did a little research on HUG Engineering products. It looks to me that they only have SCR using ammonia / urea but not using other reactants. As regard to HC-SRC, though they are not efficient, are you aware of their use in off-road / portable engines (not automotive)? The following table shows some of the engines in my case; some of them already have DPF installed for PM control. Are you familiar with any HC-SRC that could be applied to these engines for NOx control?

Make	Model	HP
Caterpillar	C-15	540
Detroit	8V71	250
Caterpillar	D343	365
Detroit	8V-71N	335
GM	3-71	147
Detroit	4-71N	128
John Deere	4024TF270	48

Again, thank you so much!

Regards,
Lan

Lan Ma* | *Associate
ENVIRON International Corp. | www.environcorp.com
773 San Marin Drive Suite 2115 | Novato, CA 94998
Tel: (+1) 415.899.0742 | Fax: (+1) 415.899.0707

E-mail: lma@environcorp.com

From: Lan Ma
Sent: Thursday, December 03, 2009 2:05 PM
To: 'terry.lomuntad@basf.com'
Subject: NOx Emission Reduction Catalyst Inquiry

Dear Terry,

My name is Lan Ma, from ENVIRON. I was referred to contact you by Thomas Bayer at Siemens regarding NOx emissions reduction catalyst technology. The catalyst I am interested in would be for portable engines aboard a ship. The goal is to reduce NOx emissions without the use of urea due to certain issues with urea such as ammonia slip and the need for large space. I am wondering what type of catalyst, if any, would fit this application. If so, are they designed only for certain engines and have they been tested?

Thanks for your help!

Sincerely,
Lan

Lan Ma* | *Associate
ENVIRON International Corp. | www.environcorp.com
773 San Marin Drive Suite 2115 | Novato, CA 94998
Tel: (+1) 415.899.0742 | Fax: (+1) 415.899.0707
E-mail: lma@environcorp.com

From: Bayer, Thomas (WT) [mailto:tom.bayer@siemens.com]
Sent: Wednesday, November 25, 2009 4:18 AM
To: Lan Ma
Cc: terry.lomuntad@basf.com
Subject: Re: NOx Emission Reduction Catalyst Inquiry

Dear Lan,
As talked about on the phone last night, for catalyst you will have to contact BASF after they had aquired Engelhard.
I have copied Terry Lomuntad from BASF who helped us out often.

Her phone number is: (732) 205-6253

I hope this works out for you and wish you a Happy Thanksgiving.

Best regards
Thomas

From: Lan Ma <lma@environcorp.com>
To: Bayer, Thomas (WT)
Sent: Tue Nov 24 20:21:30 2009
Subject: NOx Emission Reduction Catalyst Inquiry

Dear Tom,

Thank you for calling me back today and offering a reference for me. The catalyst I am interested in would be for portable engines aboard a ship. The goal is to reduce NOx emissions without the use of urea due to certain issues with urea such as ammonia slip and the need for large space. I am wondering what type of catalyst, if any, would fit this application. If so, are they designed only for certain engines and have they been tested?

Thanks again!
Lan

Lan Ma* | *Associate
ENVIRON International Corp. | www.environcorp.com
773 San Marin Drive Suite 2115 | Novato, CA 94998
Tel: (+1) 415.899.0742 | Fax: (+1) 415.899.0707
E-mail: lma@environcorp.com

RECORD of CONVERSATION
And DOCUMENTATION OF INFORMATION from
Clean Cam Technology Systems (CCTS)

From: Don Fairchild [mailto:don@cctskit.com]
Sent: Tuesday, December 08, 2009 3:38 PM
To: Lan Ma
Subject: Re: CCTS Questions

Lan;

1) Clients usealy ship the engine to us and we rebuild the engine and install the camshafts and cylinder kits at that time, we ship the engine back with aone year warranty.
2) Yes the products have been tested in cranes, gen sets, sewer pumps, mud pumps, drilling rigs, buses and don't apear to have any problems.
3) Yes, JP8 fuel does not work as intended with out further testing and development.
4) Yes, ccts works with crank case ventilation systems
5) at this time we have two ULSD test's going on and we are working on taking an engine to SWRI to see if we can get to the next level for carb approval.
6) Yes any retarding of the timeing would be removed at the time of the ccts install
7) Coupling a DPF to a CCTS equiped engine further reduce the PM out put will not adversely provided the (CFM) exhaust flow matched the engine out put.
8) the time to rebuild and install the CCTS parts in an engine will very by the engine size and condition at the time of the retro-fit An 8V71 for example will take aroung two-three weeks depending on our work load at the time the work is preformed.

I hope this helps

Regards

Don Fairchild
CCTS
Bakersfield, CA
661-391-4520 office
661-391-4525 Fax
sales@cctskit.com

P.S. If you know of any business that would like to team up with us or of any grants that may be avaliable to us to do further testing we would be grateful.

From: Don Fairchild [mailto:don@cctskit.com]
Sent: Tuesday, December 08, 2009 2:48 PM
To: Lan Ma
Subject: Re: CCTS Questions

lan;

The price for the camshafts and cylinder kits for the 8V71 is 6,135.00 I hope this helps. I am answering the other questions now.

Thank you

Don Fairchild
Clen Cam Technology Systems
Bakersfield, CA
661-391-4520 Office
661-391-4525 fax
sales@cctskit.com

From: Lan Ma
Sent: Tuesday, December 08, 2009 11:09 AM
To: 'don@cctskit.com'
Subject: RE: CCTS Questions

Hi Don,

Apologies! I realized I entered wrong cost estimate in the table below. They should be $6,100 and $7,500 for the 8V71 and 8V71N engines, respectively, as obtained from CARB documentation. Please confirm.

Thanks,
Lan

Lan Ma | Associate
ENVIRON International Corp. | www.environcorp.com
773 San Marin Drive Suite 2115 | Novato, CA 94998
Tel: (+1) 415.899.0742 | Fax: (+1) 415.899.0707
E-mail: lma@environcorp.com

From: Lan Ma
Sent: Tuesday, December 08, 2009 10:44 AM
To: 'don@cctskit.com'
Subject: FW: CCTS Questions

Hi Don,

Will you be able to get back to me regarding the below references sometime today? I was asked to submit the document and would really appreciate your confirmation on some of points we discussed. Also, to do my cost-effectiveness analysis, I used the CCTS cost numbers of from the ARB website. I believe these costs (see below) reflect the engine rebuild and capital cost of the CCTS kit. Are there other costs associated with this product? How about shipping? And do you have an estimate of how long this process (from shipping to installation to shipping back) will take? Thank you so much for your help. -- Lan

Make	Model	HP	Cost
Detroit	8V71	250	$61,000
Detroit	8V-71N	335	$75,000

Lan Ma | Associate
ENVIRON International Corp. | www.environcorp.com

773 San Marin Drive Suite 2115 | Novato, CA 94998
Tel: (+1) 415.899.0742 | Fax: (+1) 415.899.0707
E-mail: lma@environcorp.com

From: Lan Ma
Sent: Thursday, December 03, 2009 3:20 PM
To: 'don@cctskit.com'
Subject: CCTS Questions

Hello Don,

This is Lan from ENVIRON. We have spoken over the phone a couple of times regarding CCTS products. Your explanations were really helpful and so thank you! I have written up my findings but would like to have written references; here I am addressing some of the details we have discussed, would you confirm for me that they are correct and clarify for me if any of these statements seem ambiguous. Thank you very much for your help!

1) Clients typically ship the engines to you to install the Cam Shaft Cylinder Reengineering Kit or they ship the engine and you ship the Kit to a local shop for installation on site.
2) The CCTS product has been tested on engines working under varying loads and there does not appear to have any problems.
3) The CCTS product has been tested on engine working under cold climate conditions. It is found that when using JP8 fuel, there were combustion difficulties, but it worked fine with using regular diesel fuel.
4) The CCTS product works fine with a crankcase ventilation system on the engine.
5) The CCTS product is being tested to use ULSD.
6) If other retrofits such has ITR (Injection Timing Retard) were applied to an engine previously, they would need to be removed before installing the CCTS kit.
7) Coupling a DPF (Diesel Particular Filter) with the CCTS kit to further reduce PM at the exhaust is theoretically possible, though not commonly done. The exhaust temperature is not lowered by the CCTS kit (although it might be low at engine start but temperature raises when engine starts running); therefore DPF performance is not affected (temperature requirement wise).
8) Additionally, I would also like to know how long does installation normally take – just to have a rough idea on timeframe.

Thanks so much again, Don!

Regards,
Lan

Lan Ma | Associate
ENVIRON International Corp. | www.environcorp.com
773 San Marin Drive Suite 2115 | Novato, CA 94998
Tel: (+1) 415.899.0742 | Fax: (+1) 415.899.0707
E-mail: lma@environcorp.com

From: Lan Ma
Sent: Thursday, November 19, 2009 1:50 PM
To: 'don@cctskit.com'
Subject: RE: CCTS Questions

Hi Don,

Apologies for the hassle, I have one more question: If the engine is operated at varying loads and/or under cold climate conditions, would that affect the performance or levels of emission reductions of the CCTS kit?

I can be reached via phone (415) 899-0742 or e-mail. Again, I really appreciate your time to help.

Regards,
Lan

Lan Ma* | *Associate
ENVIRON International Corp. | www.environcorp.com
773 San Marin Drive Suite 2115 | Novato, CA 94998
Tel: (+1) 415.899.0742 | Fax: (+1) 415.899.0707
E-mail: lma@environcorp.com

From: Lan Ma
Sent: Thursday, November 19, 2009 12:48 PM
To: 'don@cctskit.com'
Subject: CCTS Questions

Hello Don,

This is Lan from ENVIRON. We have spoken over the phone last week regarding CCTS on marine applications. I have a couple more general questions regarding the product and would really appreciate your time in answering my request.

- Since this is an engine modification, do clients typically ship the engines to you to install the Cam Shaft Cylinder Reengineering Kit or do you have engineers who also travel out to install the kit? The engines of interest in my case are portable engines for marine purposes; how is the installation done typically for this case?
- Last time we talked, you mentioned that the ARB has done a study on CCTS on a Navy ship. I found a description of this study here (http://www.arb.ca.gov/regact/2007/chc07/appe.pdf); is this what you were referring to?
- Can the Cam Shaft Cylinder Reengineering Kit still be applied if an engine has already installed a crankcase ventilation system or other types retrofit (e.g. Injection Time Retard, Exhaust Gas Recirculation, etc…)? Do you remove the other systems before installing the CCTS Kit? I also noticed in the Navy ship study that a DPF was installed in addition to the CCTS kit; are there other types of retrofits that can be used together with the CCTS kit to further reduce emissions?

Thank you very much for your help!

Sincerely,
Lan Ma

Lan Ma* | *Associate
ENVIRON International Corp. | www.environcorp.com
773 San Marin Drive Suite 2115 | Novato, CA 94998
Tel: (+1) 415.899.0742 | Fax: (+1) 415.899.0707

E-mail: lma@environcorp.com

RECORD of CONVERSATION
And DOCUMENTATION OF INFORMATION from
Exhaust Gas Recirculation and Injection Timing Retard

From: Todd Loughney [mailto:TLoughney@Smithppi.com]
Sent: Tuesday, December 08, 2009 1:55 PM
To: Ron Friesen
Subject: Re: Engine Retrofits and Replacements

Ron,

I can confirm that we have spoken on these topics as you have outlined in the e-mail below, and I concur with your statements.

I have forwarded this information to my sales department for further price quotation.

----- Original Message -----
From: Ron Friesen
To: tloughney@smithppi.com
Sent: Tuesday, December 08, 2009 1:08 PM
Subject: FW: Engine Retrofits and Replacements

Todd:

We are providing our analysis to the client today. Any chance you can confirm by email that the numbers below are what you provided to me? Thanks.

Ron

Ronald A. Friesen, P.E., QEP | Manager
ENVIRON International Corporation
9080 Double Diamond Parkway, Suite E
Reno, Nevada 89521
V: 775.853.4498| F: 775.828.4529 |
E: rfriesen@environcorp.com|

From: Ron Friesen
Sent: Monday, December 07, 2009 11:35 AM
To: 'tloughney@smithppi.com'
Subject: Engine Retrofits and Replacements

Todd:

Thanks for the information you provided in our conversation today. To summarize our conversation:

We have 6 older engines being used for various applications on a Drill Ship. We are evaluating BACT for the following engines:

Application	Manufacturer	Model	Size		MMBtu/hr
HPU Engine	Detroit	8V71	250	hp	2
HPU Engine	Detroit	8V71	250	hp	2
Cementing Unit	Detroit	8V-71N	335	hp	2.6
Cementing Unit	Detroit	8V-71N	335	hp	2.6
Port Deck Crane	Caterpillar	D343	365	hp	2.8
Starbd Deck Crane	Caterpillar	D343	365	hp	2.8

In general the engines loads are 50 to 100% and operate only about 65 days per year. We have two questions:

1) Can the Detroit engines be retrofitted with EGR or ITR (Injection Timing Retard)? You indicated that these engines are older two-stroke engines and that it is not possible to retrofit these engines with either EGR or ITR. This is primarily a feasibility issue since the two-stoke engine vents through the valves and inhales through the block making EGR useless. Also you indicated that the timing retard would cause the engine to loose power and not reduce emissions.
2) What are the replacement costs for all 6 engines? You indicated that you could give us a cost estimate to purchase and install these engines with replacement engines that are Tier 3 level engines. In additional to capital, installation, and maintenance costs, we would also be interested to know what your costs would be to travel to Alaska to actually install the engines while the ship is in dry-dock.

If you could confirm our conversation or offer any additional comments on item 1 above, I would appreciate it very much. Also, If you can provide us with answers to question 2) above, I would appreciate it very much as well. Let me know if you have any questions. Due to snow conditions today, I am working at my home office and can be reached at 775.826.0929.

Ron

Ronald A. Friesen, P.E., QEP | Manager
ENVIRON International Corporation
9080 Double Diamond Parkway, Suite E
Reno, Nevada 89521
V: 775.853.4498| F: 775.828.4529 |
E: rfriesen@environcorp.com|

RECORD of CONVERSATION
And DOCUMENTATION OF INFORMATION from
Cleaire Advanced Emission Controls, LLC

From: Tom Swenson [mailto:tom.swenson@cleaire.com]
Sent: Wednesday, December 02, 2009 7:18 PM
To: Ron Friesen
Subject: RE: Follow Up

Ron,
That captures my comments well.
Tom

Tom Swenson, P.E.
Director - Market Development
Cleaire Advanced Emission Controls, LLC
14333 Wicks Blvd.
San Leandro, California 94577-6719
Office: 916.689.0248
Fax: 510.895.5670
www.cleaire.com

This message and any files or text attached to it are intended solely for the use of the intended recipient and may contain information that is confidential. If you feel that you have received this message in error, you must not read, copy, use or disclose this communication and its attached files. Please notify the sender of the error by replying to this message, and then delete all copies of it from your system.

From: Ron Friesen [mailto:rfriesen@environcorp.com]
Sent: Wednesday, December 02, 2009 6:01 PM
To: Tom Swenson
Subject: Follow Up
Importance: High

Tom:

I appreciated our recent conversation regarding the use of the Cleaire Longview product for a drill ship application in an artic climate. I have been asked to document our conversation for reference purposes. Based on our conversation, you indicated that the system is not amenable to long periods of idle but rather like high loads. I understood you to say that while there are no technical reasons the technology would not work, you felt that the technology would be more of a demonstration project for this application. You further indicated that an installation would require an increase in the tail pipe run to approximately a 36 to 48 inch exhaust. This tail pipe run would be subject to cooling which would further reduce the effectiveness of the system. You also pointed out that in addition to the lack of available space there would be a need for technical support during the demonstration of this technology and thus would not recommend the product as a commercial product for this application. I would appreciate it if you could confirm our conversation. If you have any comments or corrections to my summary, please let me know or give me a call. Thanks again.

Ron

Ronald A. Friesen, P.E., QEP | Manager
ENVIRON International Corporation
9080 Double Diamond Parkway, Suite E
Reno, Nevada 89521
V: 775.853.4498| F: 775.828.4529 |
E: rfriesen@environcorp.com|

RECORD of CONVERSATION
And DOCUMENTATION OF INFORMATION from
Engine Replacement Costs

From: Ron Friesen
Sent: Monday, December 07, 2009 2:22 PM
To: 'John Delahunt'
Subject: RE: Compliant engine options

John:

Thank you for the information regarding Power Products cost estimates for replacement engines identified below:

250 hp engine: Capital cost=$23,000 to $25,000
Installation =$10,000 to $15,000
Other = Travel + Room and Board to Barrow, AK

335 hp engine: Capital cost=$30,000 to $32,000
Installation =$15,000
Other=Travel + Room and Board to Barrow, AK

365 hp engine: Capital Cost$45,000 to 50,000
Installation =$15,000
Other = Travel, + Room and Board to Barrow, AK

It is our understanding that these are estimates for repowering the engines as opposed to replacement of the entire units. All units are in stock and would be manufactured by DDC but are actually Mtu/Mercedes Bends Industrial Engines. According to Todd, you would need about a month to schedule such installations. Also, you would need to Alaska once the ship is in dock and provide detailed cost estimates.

RECORD of CONVERSATION
And DOCUMENTATION OF INFORMATION from
Johnson Matthey

From: Jeremy Harris [mailto:harrisje@jmusa.com]
Sent: Thursday, December 03, 2009 1:07 PM
To: Ron Friesen
Cc: Richard Rosowski
Subject: RE: Status of Evaluation

Ron,

I made a few comments below. Everything else is as we discussed.

Jeremy
>>> "Ron Friesen" <rfriesen@environcorp.com> 12/2/2009 8:21 PM >>>

Jeremy:
The information you provided was very useful for our analysis of BACT for the engines in question. I have been asked to document what I received from you, which I can do based on your note below. However, as you recall, I called you back and asked a few more questions for which you provided answers verbally. Can you confirm that you provided the following additional information?

1. Cost of urea: $2.00/gallon in large quantities or $3.00/gallon for what we have in this application. You usually purchase the urea in 700 gallon quantities **This one is a little off. This is what you would have to purchase for this project due to the tank only being 1000 gallons and you don't want to let it run dry. In large stationary applications we usually try to steer the customer toward a 6,000 gallon tank so they can buy a truck load of urea, which is 5,000 gallons.**
2. A 1000 gallon tank would last about 30 days at full load (we would need to calculate at half load) **The 32.5% urea flow rate requirement is 1.1 gal/hr. A 1000 gallon tank will allow for 900 hours of operation or 37 days at full load, but since you aren't going to let it run dry you are going to need to fill the urea tank about every 30 days. The engine exhaust flow is approximately proportional to load so the urea flow rate requirement will be about 0.55 gal/hr at half load.**
3. Efficiency of system quoted is 90%
4. Life equipment can be assumed to be 10 or 15 years
5. Life of catalyst is 5 to 7 years. Replacement cost of Catalyst is about $8,000.
6. For maintenance costs (in addition to urea costs) you can amortize the equipment over the life of the project. It should be about $5,000 to $10,000 per year.
7. Use of equipment in artic temperatures. Ideally would want to place in control room but out on the deck it would be best to insulate and have heat tracers **(tracing)**.

We used the information you provided below plus the additional information in this note to calculate the cost-effectiveness of the SCR system. If you have any questions or need to correct anything above, please let me know or give me a call. Thanks again for your help.
Ron

Ronald A. Friesen, P.E., QEP | Manager
ENVIRON International Corporation
9080 Double Diamond Parkway, Suite E

Reno, Nevada 89521
V: 775.853.4498| F: 775.828.4529 |
E: rfriesen@environcorp.com|

From: Jeremy Harris [mailto:harrisje@jmusa.com]
Sent: Tuesday, November 24, 2009 7:35 AM
To: Ron Friesen
Cc: Richard Rosowski
Subject: Re: Status of Evaluation

Ron,
Sorry for the delayed response.
We would estimate the budget cost for equipment for this project would be $85,000 and the budget cost for installation would be $110,000.
Our equipment budget price includes:
Catalyst Housing- 1010 housing made of 304SS (drawing attached)
Extruded Ceramic Catalyst
Mixing Duct- 12" diameter x 7 feet long- 304 SS construction
12" Expansion Joint
1000 gallon polyethylene, double wall storage tank- urea requirement is 1.1 gal/hour at full load
Control System- Drawing of standard design is attached (we could make smaller if required)
Installation is just a budget number based on experience. The exact number can be provided with more details about the project.
Please let us know if we can be of any further assistance.
Best regards,
Jeremy Harris
for Johnson Matthey
Phone: 484-320-2122
Cell: 610-636-8318
Fax: 484-320-2152

>>> "Ron Friesen" <rfriesen@environcorp.com> 11/19/2009 6:45 PM >>>
Jeremy:
Just wanted to check to see how it is going on the SCR evaluation. Do you expect to get me something today or should I look for it tomorrow?
Ron

Ronald A. Friesen, P.E., QEP | Manager
ENVIRON International Corporation
9080 Double Diamond Parkway, Suite E
Reno, Nevada 89521
V: 775.853.4498| F: 775.828.4529 |
E: rfriesen@environcorp.com|

TECHNOLOGICAL APPLICATIONS

1. Pumping Units
2. Generator Sets
3. Portable Equipment
4. Stationary Off-Road Equipment
5. Emergency Standby Equipment

8 MODE STEADY STATE TEST CFR TITLE 40 PART 89 OFF HIGHWAY TEST RESULTS

DDC6V92

		HC	CO	NOx	PM
	CCTS	0.31	0.45	5.15	.114
New Engine Standards	EPA/CARB 1996	1.00	8.50	6.90	.400
New Engine Standards	EPA/CARB 2001	1.00	8.50	5.80	.160

DDC6L71

		HC	CO	NOx	PM
	CCTS	0.42	1.15	5.62	.114
New Engine Standards	EPA/CARB 1996	1.00	8.50	6.90	.400
New Engine Standards	EPA/CARB 2001	1.00	8.50	5.80	.160

DDC6V71

		HC	CO	NOx	PM
	CCTS	0.37	0.85	5.79	.133
New Engine Standards	EPA/CARB 1996	1.00	8.50	6.90	.400
New Engine Standards	EPA/CARB 2001	1.00	8.50	5.80	.160

**ALL CCTS ENGINES SURPASSED ALL REQUIRED FTP SMOKE TESTS*

ALL TEST RESULTS ARE IN g/hphr

TECHNOLOGY INSTALLATION

1. Parts installed during normal engine rebuild
2. No special tools required
3. Minimal additional time added to rebuild process
4. Simple "rebuild kit" includes: custom cam shafts and cylinder kits. All other parts are OEM parts or their aftermarket equivalents.

TECHNOLOGY INTEGRITY

1. Fully field and laboratory tested - 100,000 hours+
2. EPA Certified *(Urban Bus Rebuild Program)*
3. CARB Certified *(Off-Road Stationary Sources)*
4. Multiple Patents on Technology

REGULATORY APPLICATION

Statewide Portable Equipment Program

Stationary Source Permitting - Nationwide

Title V Offset Assistance

Permitting Programs in Local Air Districts

Carl Moyer Program Certified

BARCT Compliance

"TURNING EMISSIONS INTO CLEAN AIR"

For more information, please contact Wendy Henderson at Gary Drilling Company 7001 Charity Avenue Bakersfield, CA 93308

661.589.0111
800.443.5925
661.589.0283 (fax)

www.cctskit.com

Copyright © 1999
by CCTS/Gary Drilling Company.
All rights reserved.

CCTS
Clean Cam Technology Systems

Diesel Engine Emission Reduction Technology for Stationary Sources and Off-Road Portable Equipment

REVISIONS			
REV.	DESCRIPTIONS	BY	APPVD.

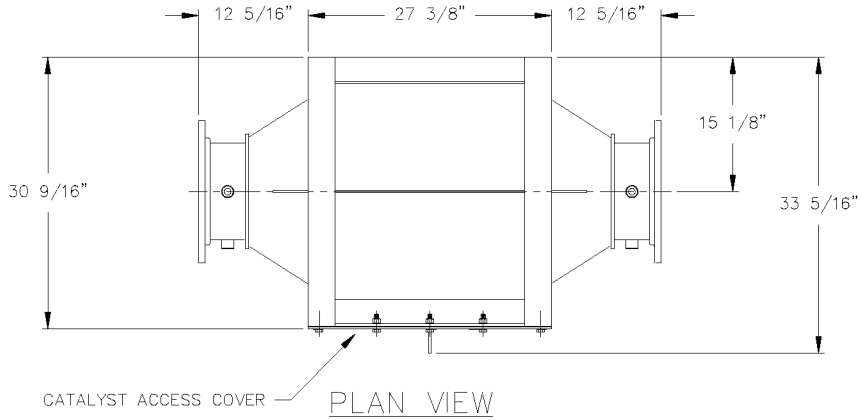

PLAN VIEW

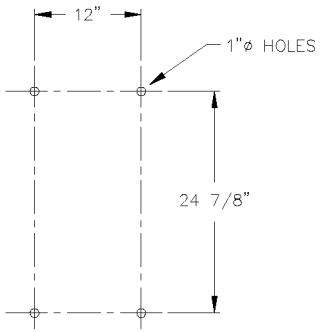

BASE BOLT PATTERN
(IN SUPPORT STEEL)

NOTES:

1. MATERIAL: U.N.O. 304 S.S. PREFERRED AS LISTED
   PLATE: ST. STL. 304 PER ASTM A240 GR 304
   ANGLES: ST. STL. 304 PER ASTM A276
   TUBING (SQUARE): ST. STL. 304
   FITTINGS: ST. STL. 304 PER ASTM A403 GR WP 304
   BOLTS: ST. STL. 304 PER ASTM A193 GR B8
   NUTS: CAR. STL. PER ASTM A194 GR 2H
   FLANGE: ST. STL. PER ASTM A105
   GASKET: VERMICULITE COATED FIBERGLASS TAPE.

2. APPROX. WEIGHT:
   EMPTY: 625 LBS.
   W/ONE LAYER CATALYST: 745 LBS.
   W/TWO LAYERS CATALYST: 865 LBS.

3. (NF) INDICATES NOT FURNISHED BY JOHNSON MATTHEY.

4. DESIGN TEMPERATURE: 1250°F MAX.
   DESIGN PRESSURE 14" W.C.

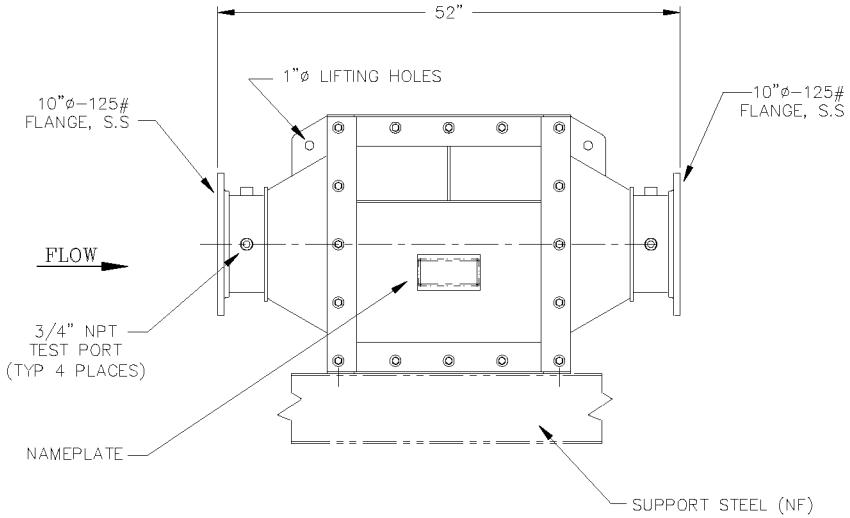

ELEVATION VIEW

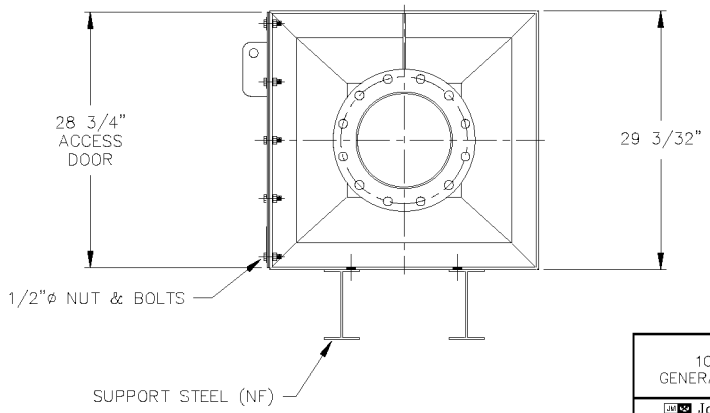

SIDE VIEW

DUALOX
1010SS-10-4
GENERAL ARRANGMENT

Johnson Matthey
WAYNE, PA
HOD\SSEC ENGINEERING

DESIGN		ENGR.	PRO. ENGR.	ENGR. MGR.
DRAWN MEC	CHECKED			
DATE: 8/22/01	SHEET NO. 1 OF 1	DRAWING NUMBER		REV.
SCALE 1:8		SCR-D-6910		0

PROPERTY OF JOHNSON MATTHEY, INC. TO BE RETURNED UPON REQUEST AND USED ONLY IN REFERENCE TO CONTRACTS OR PROPOSALS OF THIS CORPORATION. UNAUTHORIZED REPRODUCTION IS PROHIBITED

REVISIONS			
REV.	DESCRIPTIONS	BY	APPVD.

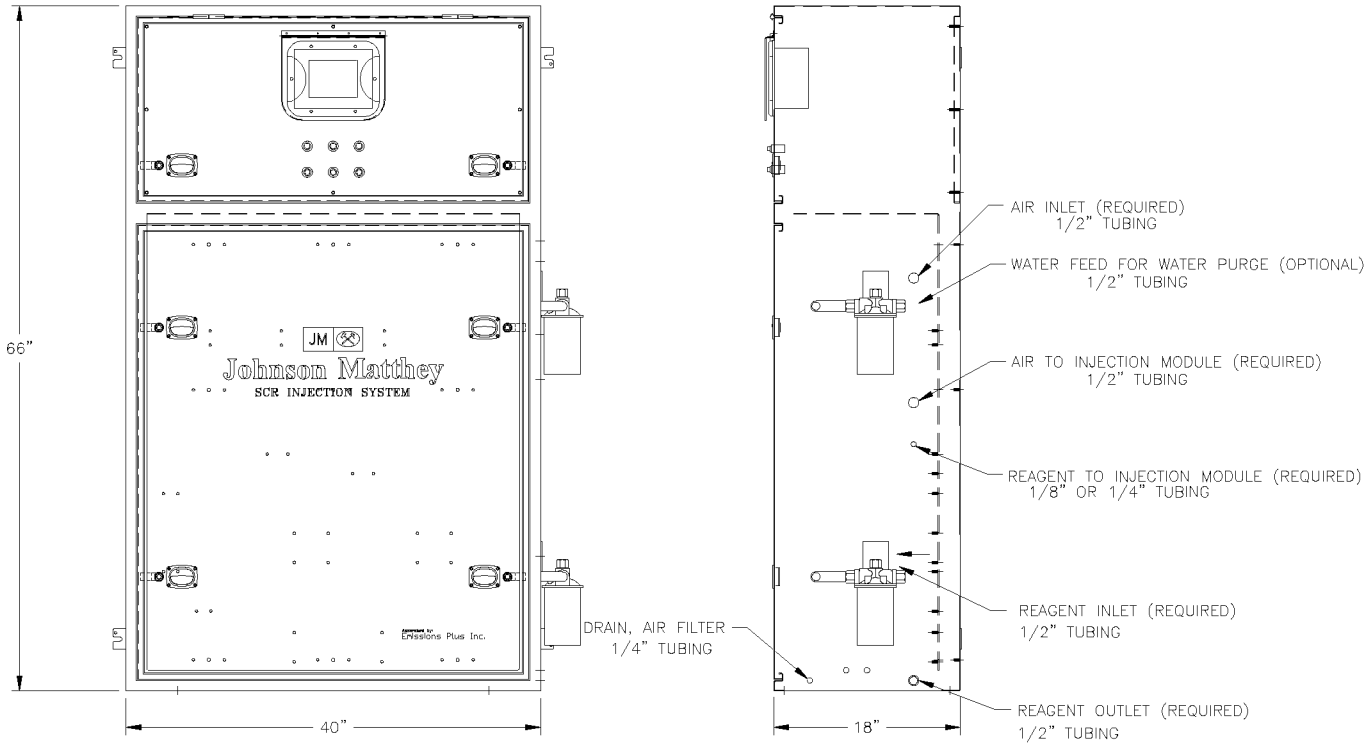

WEIGHT 600 #

DIMENSION TOLERANCES (UNLESS OTHERWISE SPECIFIED)		
	IN	[mm]
X	± 0.005 IN/IN	[±0.005 mm/mm]
X.X	± 0.03	[1]
X.XX	± 0.015	[0.4]
X.XXX	± 0.005	[0.1]
FRACTION ± 1/32" PER 15 IN		
ANGLE ± 2°		
REMOVE ALL SHARP EDGES AND BURRS		

SCR
INJECTION SYSTEM

STANDARD ENCLOSURE

JM Johnson Matthey
WAYNE, PA
HDD\SSEC ENGINEERING

DESIGN		ENGR.	PRO. ENGR.	ENGR. MGR.
DRAWN SAB	CHECKED			
DATE: 10-2-03	SHEET NO. 1 OF 1	DRAWING NUMBER		REV.
SCALE 1/8		SCR-C-7950		0

PROPERTY OF JOHNSON MATTHEY, INC. TO BE RETURNED UPON REQUEST AND USED ONLY IN REFERENCE TO CONTRACTS OR PROPOSALS OF THIS CORPORATION. UNAUTHORIZED REPRODUCTION IS PROHIBITED.

DIESEL GENERATOR SET

CATERPILLAR®

Image shown may not reflect actual package.

STANDBY
450 ekW 563 kVA
60 Hz 1800 rpm 480 Volts

Caterpillar is leading the power generation marketplace with Power Solutions engineered to deliver unmatched flexibility, expandability, reliability, and cost-effectiveness.

FEATURES

FUEL/EMISSIONS STRATEGY
- EPA Tier 3 and Low Emissions

DESIGN CRITERIA
- The generator set accepts 100% rated load in one step per NFPA 110 and meets ISO 8528-5 transient response.

UL 2200
- UL 2200 listed packages available. Certain restrictions may apply. Consult with your Caterpillar Dealer.

FULL RANGE OF ATTACHMENTS
- Wide range of bolt-on system expansion attachments, factory designed and tested
- Flexible packaging options for easy and cost effective installation

SINGLE-SOURCE SUPPLIER
- Fully prototype tested with certified torsional vibration analysis available

WORLDWIDE PRODUCT SUPPORT
- Caterpillar® dealers provide extensive post sale support including maintenance and repair agreements
- Caterpillar dealers have over 1,600 dealer branch stores operating in 200 countries
- The Cat® S•O•S℠ program cost effectively detects internal engine component condition, even the presence of unwanted fluids and combustion by-products

CAT® C15 ATAAC DIESEL ENGINE
- Utilizes ACERT™ Technology
- Reliable, rugged, durable design
- Field-proven in thousands of applications worldwide
- Four-stroke diesel engine combines consistent performance and excellent fuel economy with minimum weight
- Electronic engine control

CAT GENERATOR
- Matched to the performance and output characteristics of Caterpillar engines
- Load adjustment module provides engine relief upon load impact and improves load acceptance and recovery time
- UL 1446 Recognized Class H insulation

CAT EMCP 3 SERIES CONTROL PANELS
- Simple user friendly interface and navigation
- Scalable system to meet a wide range of customer needs
- Integrated Control System and Communications Gateway

FACTORY INSTALLED STANDARD & OPTIONAL EQUIPMENT

System	Standard	Optional
Air Inlet	• Light Duty Air filter	• Canister Style Air Cleaners • Air Cleaner - single stage • Dual element • Heavy duty
Cooling	• Radiator package mounted(50ºC) • Coolant drain line with valve terminated at edge of base • Fan and belt guards • Coolant level sight gauge • Caterpillar Extended Life Coolant	• Radiator removal • Radiator duct flange & guard
Exhaust	• Dry exhaust manifold • Flanged faced outlets • Stainless Steel Flex with split-cuff connection	• Mufflers • Manifold & Turbocharger guards • Elbows
Fuel	• Primary fuel filter with integral water separator • Secondary fuel filters • Fuel priming pump • Engine fuel transfer pump • Flex fuel lines • Fuel cooler* *Not included with packages without radiators	• Integral UL listed fuel tank base • Manual transfer pump • Fuel level switch
Generator	• Class H insulation • R448 voltage regulator with load adjustment module • IP23 Protection	• CDVR with KVAR/PF control • Oversize and premium generators • Bearing/Stator temperature detection (premium generator) • 3 phase sensing • Anti-condensation space heaters • Cable access box • Reactive droop
Power Termination	• Power Terminator Strips Mounted inside Power Center • Segregated low voltage wiring panel	• Circuit breakers, UL listed, 3 pole • Circuit breakers, IEC compliant, 3 pole • Circuit breaker Shunt trip • Circuit breaker Auxillary contact • Top & bottom power cable entry • Floor standing UL breakers
Governor	• ADEM™A4	• Load share module
Control Panels	• EMCP 3.1 (rear mounted) • Speed adjust • Emergency stop pushbutton • Voltage adjust	• EMCP 3.2 & EMCP 3.3 (can be RH mounted) • Local annuniciator modules (NFPA 99/110) • Remote annunicator modules (NFPA 99/110) • Discrete I/O module
Lube	• Lubricating oil and filter • Oil drain line with valves • Fumes disposal • Gear type lube oil pump	• Manual sump pump
Starting/Charging	• 24 volt starting motor • Battery with rack and cables (dry) • 45 amp charging alternator	• Jacket water heater with shut off valves • Block heater • Ether starting aids • Battery disconnect switch • Battery chargers (5 & 10 amp) • Oversized batteries
General	• Paint - Caterpillar yellow except rails and radiators gloss black • Flywheel and flywheel housing - SAE No.1	

STANDBY 450 ekW 563 kVA

60 Hz 1800 rpm 480 Volts

CATERPILLAR®

SPECIFICATIONS

CAT GENERATOR

Frame size..... LC6114D
Excitation..... Self Excitation
Pitch.....0.6667
Number of poles.....4
Number of bearings..... Single Bearing
Number of Leads..... 12
Insulation..... UL 1446 Recognized Class H with tropicalization and antiabrasion
- Consult your Caterpillar dealer for available voltages
IP Rating.....IP23
Alignment..... Pilot Shaft
Overspeed capability..... 125% of rated
Wave form Deviation (Line to Line)..... 2%
Voltage regulator..... Single phase sensing with selectible volts/Hz
Voltage regulation.....Less than +/- 1/2% (steady state)
Less than +/- ½% (w/ 3% speed change)
Telephone influence factor.....Less than 50
Harmonic Distortion.....Less than 5%

CAT DIESEL ENGINE

C15 ATAAC, L-6, 4-stroke water-cooled diesel
Bore..... 137.20 mm (5.4 in)
Stroke..... 171.40 mm (6.75 in)
Displacement.....15.20 L (927.56 in^3)
Compression Ratio..... 16.1:1
Aspiration..... ATAAC
Fuel System.....MEUI
Governor Type..... Caterpillar ADEM control system

CAT EMCP 3 CONTROL PANELS

- EMCP 3.1 (Standard)
- EMCP 3.2 / EMCP 3.3 (Option)
- Single location customer connector point
- True RMS metering, 3-phase
- Controls
  - Run / Auto / Stop control
  - Speed Adjust
  - Voltage Adjust
  - Emergency Stop Pushbutton
  - Engine cycle crank
- Digital Indication for:
  - RPM
  - Operating hours
  - Oil Pressure
  - Coolant temperature
  - System DC volts
  - L-L volts, L-N volts, phase amps, Hz
  - ekW, kVA, kVAR, kW-hr, %kW, PF (EMCP 3.2 / 3.3)
- Shutdowns with common indicating light for:
  - Low oil pressure
  - High coolant temperature
  - Low coolant level
  - Overspeed
  - Emergency stop
  - Failure to start (overcrank)
- Programmable protective relaying functions: (EMCP 3.2 & 3.3)
  - Under and over voltage
  - Under and over frequency
  - Overcurrent (time and inverse time)
  - Reverse power (EMCP 3.3)
- MODBUS isolated data link, RS-485 half-duplex (EMCP 3.2 & 3.3)
- Options
  - Vandal door
  - Local annunciator module
  - Remote annunciator module
  - Input / Output module
  - RTD / Thermocouple Modules
  - Monitoring software

TECHNICAL DATA

Open Generator Set - - 1800 rpm/60 Hz/480 Volts	DM8153	
Tier 3 and Low Emissions		
Generator Set Package Performance		
Genset Power rating @ 0.8 pf	562.5 kVA	
Genset Power rating with fan	450 ekW	
Fuel Consumption		
100% load with fan	132.2 L/hr	34.9 Gal/hr
75% load with fan	106.4 L/hr	28.1 Gal/hr
50% load with fan	79.3 L/hr	20.9 Gal/hr
Cooling System[1]		
Air flow restriction (system)	0.12 kPa	0.48 in. water
Air flow (max @ rated speed for radiator arrangement)	720 m^3/min	25427 cfm
Engine Coolant capacity with radiator/exp. tank	57.8 L	15.3 gal
Engine coolant capacity	20.8 L	5.5 gal
Radiator coolant capacity	37.0 L	9.8 gal
Inlet Air		
Combustion air inlet flow rate	41.5 m^3/min	1465.6 cfm
Exhaust System		
Exhaust stack gas temperature	492.0 ° C	917.6 ° F
Exhaust gas flow rate	111.9 m^3/min	3951.7 cfm
Exhaust flange size (internal diameter)	152.4 mm	6.0 in
Exhaust system backpressure (maximum allowable)	6.8 kPa	27.3 in. water
Heat Rejection		
Heat rejection to coolant (total)	178 kW	10123 Btu/min
Heat rejection to exhaust (total)	485 kW	27582 Btu/min
Heat rejection to atmosphere from engine	103 kW	5858 Btu/min
Heat rejection to atmosphere from generator	29.2 kW	1660.6 Btu/min
Alternator[2]		
Motor starting capability @ 30% voltage dip	1089 skVA	
Frame	LC6114D	
Temperature Rise	130 ° C	234 ° F
Emissions (Nominal)[3]		
NOx g/hp-hr	3.7 g/hp-hr	
CO g/hp-hr	.26 g/hp-hr	
HC g/hp-hr	.03 g/hp-hr	
PM g/hp-hr	.025 g/hp-hr	

[1] For ambient and altitude capabilities consult your Caterpillar dealer. Air flow restriction (system) is added to existing restriction from factory.
[2] Generator temperature rise is based on a 40° C (104° F) ambient per NEMA MG1-32.
[3] Emissions data measurement procedures are consistent with those described in EPA CFR 40 Part 89, Subpart D & E and ISO8178-1 for measuring HC, CO, PM, NOx. Data shown is based on steady state operating conditions of 77°F, 28.42 in HG and number 2 diesel fuel with 35° API and LHV of 18,390 btu/lb. The nominal emissions data shown is subject to instrumentation, measurement, facility and engine to engine variations. Emissions data is based on 100% load and thus cannot be used to compare to EPA regulations which use values based on a weighted cycle.

RATING DEFINITIONS AND CONDITIONS

Meets or Exceeds International Specifications: AS1359, CSA, IEC60034-1, ISO3046, ISO8528, NEMA MG 1-22, NEMA MG 1-33, UL508A, 72/23/EEC, 98/37/EC, 2004/108/EC

Standby - Output available with varying load for the duration of the interruption of the normal source power. Average power output is 70% of the standby power rating. Typical operation is 200 hours per year, with maximum expected usage of 500 hours per year. Standby power in accordance with ISO8528. Fuel stop power in accordance with ISO3046. Standby ambients shown indicate ambient temperature at 100% load which results in a coolant top tank temperature just below the shutdown temperature.

Ratings are based on SAE J1349 standard conditions. These ratings also apply at ISO3046 standard conditions.

Fuel rates are based on fuel oil of 35° API [16° C (60° F)] gravity having an LHV of 42 780 kJ/kg (18,390 Btu/lb) when used at 29° C (85° F) and weighing 838.9 g/liter (7.001 lbs/U.S. gal.). Additional ratings may be available for specific customer requirements, contact your Caterpillar representative for details. For information regarding Low Sulfur fuel and Biodiesel capability, please consult your Caterpillar dealer.

DIMENSIONS

Package Dimensions		
Length	**3775.1 mm**	**148.63 in**
Width	**1110.0 mm**	**43.7 in**
Height	**2091.0 mm**	**82.32 in**
Weight	**3753 kg**	**8,274 lb**

NOTE: For reference only - do not use for installation design. Please contact your local dealer for exact weight and dimensions. (General Dimension Drawing #2781050).

Performance No.: DM8153

Feature Code: C15DE6Z

Gen. Arr. Number: 2351207

Source: U.S. Sourced

May 04 2009 14167261

www.CAT-ElectricPower.com

© 2009 Caterpillar
All rights reserved.

Materials and specifications are subject to change without notice. The International System of Units (SI) is used in this publication.

CAT, CATERPILLAR, SAFETY.CAT.COM their respective logos, "Caterpillar Yellow," and the POWER EDGE trade dress, as well as corporate and product identity used herein, are trademarks of Caterpillar and may not be used without permission.

Shell Gulf of Mexico Inc.
3601 C Street, Suite 1000
Anchorage, AK 99503

Mr. Rick Albright
Director, Office of Air, Water and Toxics
Environmental Protection Agency Region 10
1200 6th Ave. Ste. 900, AWT-128
Seattle, WA 98101

December 13, 2009

Re: Shell Gulf of Mexico Inc. Supplement to Application for Discoverer/Chukchi OCS/PSD Permit

Dear Mr. Albright,

Shell Gulf of Mexico Inc. (Shell) provides the attached supplemental technical information regarding the above-referenced permit application to further support earlier application statements. This material is provided in the form of attachments covering the following subjects:

A. References for the data sets used in Attachment D of the December 9, 2009 application supplement.
B. References for the Beaufort Sea ice statistics referred to in the Revised Discoverer Permit Application, February 23, 2009 (page 15).
C. Expanded explanation of the May 4, 2009 calculation of VOC emissions from the de-gassing of drilling muds.
D. Supplement to BACT section of the Revised Discoverer Permit Application, February 23, 2009: BACT analysis for the drilling mud de-gassing.
E. Supplement to BACT section 4.1.3.2 (Boilers and particulate controls) of the Revised Discoverer Permit Application, February 23, 2009.
F. Supplement to BACT section 4.1.3.3 (Incinerator and particulate controls) of the Revised Discoverer Permit Application, February 23, 2009.
G. Supplement to the impact analysis in the September 17, 2009 Comments on Proposed Discoverer/Chukchi Permit.
H. Replacement for Attachment C of the December 9, 2009 application supplement (adding footnote 3).
I. Description of the anchor setting and retrieval processes for the Discoverer.

We remain available to EPA to discuss or expand on any of this information.

Sincerely,

Susan Childs
Regulatory Affairs Manager, Alaska Venture

Enclosure

cc: *Lance Tolson – Shell*
Keith Craik – Shell
Nicole St Amand – Shell
Rick Fox – Shell
Mark Schindler – Octane LLC.
Rodger Steen – Air Sciences Inc.
Eric Hansen – Environ International
Jeffrey Walker - Minerals Management Service – Alaska Region

ATTACHMENT A

References for the data sets used in Attachment D of the December 9, 2009 application supplement

Attachment D of Shell's December 9, 2009 "Shell Gulf of Mexico Inc. Supplement to Application for Discoverer/Chukchi OCS/PSD Permit" presents an analysis of baseline $PM_{2.5}$ concentrations. This Attachment A supplements that discussion with references for the data sets used in the December 9th analysis.

The precipitation data is NWS data from the Wainwright Airport, Alaska. The data was obtained from the National Climatic Data Center (NCDC) GLOBAL SURFACE SUMMARY OF DAY DATA for the station named "Wainwright (DEW)" which also corresponds to the Wainwright Airport based on the meteorological WBAN code = 27503.
http://www7.ncdc.noaa.gov/CDO/cdoselect.cmd?datasetabbv=GSOD&countryabbv=&georegionabbv=

The snow cover data is from the Barrow Airport station (nearest high quality station to Wainwright), from the National Weather Service (NWS) Alaska – Pacific River Forecast Center: http://aprfc.arh.noaa.gov/sd_all_sites.html

The winds (like the precipitation data) are NWS station data from the Wainwright Airport.
http://www7.ncdc.noaa.gov/CDO/cdoselect.cmd?datasetabbv=GSOD&countryabbv=&georegionabbv=

$PM_{2.5}$ data was obtained from the following documents:

Conoco Phillips Alaska, Inc., *Wainwright Near-Term Ambient Air Quality Monitoring Program Second Quarter Data Report February through April 2009 prepared by AECOM, Inc. Document No.: 01865-104-3220*, July 2009.

Conoco Phillips Alaska, Inc., *Wainwright Near-Term Ambient Air Quality Monitoring Program Second Quarter Data Report May through July 2009 prepared by AECOM, Inc. Document No.: 01865-104-3230,* August 2009.

Conoco Phillips Alaska, Inc., *Wainwright Near-Term Ambient Air Quality Monitoring Program Second Quarter Data Report August through October 2009 prepared by AECOM, Inc.*

ATTACHMENT B

References for the Beaufort Sea ice statistics referred to in the Revised Discoverer Permit Application, February 23, 2009 (page 15)

Hammerhead and Olympia Ice Concentration

Year	Month	Day	Date	Exact Conc (x/10)	Exact Loads	Near / Medium / Far Ice	Relative Conc (x/10)	Modified Loads
1996	9	3	9/3/96	8	Heavy	E	8	Heavy
1996	9	10	9/10/96	3	Moderate	E	3	Moderate
1996	9	17	9/17/96	8	Heavy	E	8	Heavy
1996	9	24	9/24/96	8	Heavy	E	8	Heavy
1996	10	1	10/1/96	9	Heavy	E	9	Heavy
1996	10	8	10/8/96	9	Heavy	E	9	Heavy
1996	10	15	10/15/96	9	Heavy	E	9	Heavy
1996	10	22	10/22/96	9	Heavy	E	9	Heavy
1996	10	29	10/29/96	9	Heavy	E	9	Heavy
1997	9	4	9/4/97	0	Light	F	9	Light
1997	9	11	9/11/97	0	Light	F	9	Light
1997	9	18	9/18/97	0	Light	F	9	Light
1997	9	25	9/25/97	0	Light	F	9	Light
1997	10	2	10/2/97	0	Light	F	9	Light
1997	10	9	10/9/97	0	Light	F	8	Light
1997	10	16	10/16/97	9	Heavy	E	9	Heavy
1997	10	23	10/23/97	9	Heavy	E	9	Heavy
1997	10	30	10/30/97	9	Heavy	E	9	Heavy
1998	8	31	8/31/98	0	Light	F	3	Light
1998	9	7	9/7/98	0	Light	F	2	Light
1998	9	14	9/14/98	0	Light	F	1	Light
1998	9	21	9/21/98	0	Light	F	2	Light
1998	9	28	9/28/98	0	Light	F	3	Light
1998	10	5	10/5/98	0	Light	F	8	Light
1998	10	12	10/12/98	0	Light	M	9	Light
1998	10	19	10/19/98	0	Light	M	6	Light
1998	10	26	10/26/98	0	Light	M	6	Light
1999	8	30	8/30/99	0	Light	F	2	Light
1999	9	6	9/6/99	0	Light	F	2	Light
1999	9	13	9/13/99	0	Light	F	2	Light
1999	9	20	9/20/99	0	Light	F	1	Light
1999	9	27	9/27/99	0	Light	F	5	Light
1999	10	4	10/4/99	0	Light	M	3	Light
1999	10	11	10/11/99	0	Light	M	7	Light
1999	10	18	10/18/99	9	Heavy	E	9	Heavy
1999	10	25	10/25/99	9	Heavy	E	9	Heavy
2000	9	4	9/4/00	0	Light	M	2	Light
2000	9	11	9/11/00	0	Light	F	5	Light
2000	9	18	9/18/00	0	Light	F	6	Light
2000	9	25	9/25/00	0	Light	M	5	Light
2000	10	2	10/2/00	0	Light	N	9	Moderate
2000	10	9	10/9/00	0	Light	N	9	Moderate
2000	10	16	10/16/00	8	Heavy	E	8	Heavy
2000	10	23	10/23/00	9	Heavy	E	9	Heavy
2000	10	30	10/30/00	9	Heavy	E	9	Heavy
2001	9	3	9/3/01	3	Moderate	E	3	Moderate
2001	9	10	9/10/01	2	Light	E	2	Light

2001	9	17	9/17/01	0	Light	M	1	Light
2001	9	24	9/24/01	0	Light	M	1	Light
2001	10	1	10/1/01	0	Light	M	9	Light
2001	10	8	10/8/01	8	Heavy	E	8	Heavy
2001	10	15	10/15/01	9	Heavy	E	9	Heavy
2001	10	22	10/22/01	9	Heavy	E	9	Heavy
2001	10	29	10/29/01	9	Heavy	E	9	Heavy
2002	9	2	9/2/02	2	Light	E	2	Light
2002	9	9	9/9/02	0	Light	F	5	Light
2002	9	16	9/16/02	0	Light	M	1	Light
2002	9	23	9/23/02	0	Light	F	3	Light
2002	9	30	9/30/02	0	Light	F	2	Light
2002	10	7	10/7/02	0	Light	F	9	Light
2002	10	14	10/14/02	0	Light	N	5	Light
2002	10	21	10/21/02	9	Heavy	E	9	Heavy
2002	10	28	10/28/02	9	Heavy	E	9	Heavy
2003	9	1	9/1/03	0	Light	M	3	Light
2003	9	8	9/8/03	0	Light	M	5	Light
2003	9	15	9/15/03	0	Light	F	2	Light
2003	9	22	9/22/03	0	Light	M	4	Light
2003	9	29	9/29/03	0	Light	M	3	Light
2003	10	6	10/6/03	0	Light	N	3	Moderate
2003	10	13	10/13/03	0	Light	N	9	Moderate
2003	10	20	10/20/03	0	Light	N	9	Moderate
2003	10	27	10/27/03	9	Heavy	E	9	Heavy
2004	8	30	8/30/04	0	Light	F	4	Light
2004	9	6	9/6/04	0	Light	F	7	Light
2004	9	13	9/13/04	0	Light	F	5	Light
2004	9	20	9/20/04	0	Light	F	6	Light
2004	9	27	9/27/04	0	Light	F	6	Light
2004	10	4	10/4/04	0	Light	F	9	Light
2004	10	11	10/11/04	0	Light	F	9	Light
2004	10	18	10/18/04	0	Light	N	9	Moderate
2004	10	25	10/25/04	10	Heavy	E	10	Heavy
2005	9	5	9/5/05	0	Light	N	3	Moderate
2005	9	12	9/12/05	0	Light	M	4	Light
2005	9	19	9/19/05	0	Light	M	1	Light
2005	9	26	9/26/05	0	Light	F	9	Light
2005	10	3	10/3/05	0	Light	F	9	Light
2005	10	10	10/10/05	0	Light	N	9	Moderate
2005	10	17	10/17/05	8	Heavy	E	8	Heavy
2005	10	24	10/24/05	10	Heavy	E	10	Heavy

Based on September 1st - October 31st

Last 10 Ye	Type	Number W	Percent	Type	Number W	Percent
	Heavy	26	29.21348	Heavy	26	29.21348
	Moderate	2	2.247191	Moderate	10	11.23596
	Light	61	68.53933	Light	53	59.55056

Last 5 Yea	Type	Number W	Percent	Type	Number W	Percent
	Heavy	10	22.72727	Heavy	10	22.72727

	Moderate	1	2.272727	Moderate	7	15.90909
	Light	33	75	Light	27	61.36364

Last 3 Yea	Type	Number W	Percent	Type	Number W	Percent
	Heavy	4	15.38462	Heavy	4	15.38462
	Moderate	0	0	Moderate	6	23.07692
	Light	22	84.61538	Light	16	61.53846

^ Use These Numbers ^

Last 3 years:	Ice edge	Number Wks	Frequency
	At Location	4	0.153846
	Near	6	0.230769
	Moderate	6	0.230769
	Far	10	0.384615

E	Ice Edge on location
N	Within 30 miles
M	30-60 miles
F	greater than 60 miles

ATTACHMENT C

Expanded explanation of the May 4, 2009 calculation of VOC emissions from the de-gassing of drilling muds

In its May 4, 2009 submission to EPA, Shell provided a high-end estimate of the volatile organic compound (VOC) emissions from the Discoverer drilling cuttings while drilling. These VOC emissions were estimated at 128 pounds per drilling season. Although not stated, this calculation was prepared in essentially the same manner as recommended in the 2007 Minerals Management Service study of petroleum exploration and production emission calculation methods[1]. That study references a much earlier, 1977 study[2], Section 4.2.2, which states in reference to mud degassing:

> "The total amount of gases emitted annually is considered to be very small, although the rate of emission during a single 24-hour period could be as much as 20,000 ft^3 of gas based upon 400 ft of 12 inch hole per 24-hour day, 25 percent porosity, and 4000 psi reservoir pressure. This is equivalent to 0.4 Mg/day while drilling through producing formation."

Working backwards, this MMS 1997 calculation is of the volume of total hydrocarbon (THC) gas under pressure in the pores of the rock in the reservoir (78 ft^3) and brought down to ambient pressure (20,000 ft^3). Then the gas, when assumed to be methane, is converted to the mass of 400 kg per day. This is an estimate of total hydrocarbons released and based on the density of methane at standard pressure and temperature.

This emission value is not representative of the VOC emissions from the Chukchi Sea because of difference 1) between THC and VOC and 2) in physical reservoir conditions. Expected Chukchi Sea reservoir conditions are published in a 2005 MMS study[3]. Reservoir parameters are: VOC content (THC minus methane and minus ethane) is two percent (three percent is assumed for Shell's calculation so that it is conservative for the Beaufort Sea also), porosity is 29.5 percent, hydrocarbon layer thickness is 107 feet per well, hydrocarbon layer pressure is 3000 psi. With the possibility of drilling a maximum of four wells per year this emission rate is 128 lb VOC per year, as described in the May 4, 2009 calculation.

---

1 Wilson, Darcy, Richard Billings, Regi Oomen, and Roger Chang; Eastern Research Group, Inc.; Year 2005 Gulfwide Emission Inventory Study; US Department of Interior, Minerals Management Service; Gulf of Mexico OCS Region, New Orleans, December 2007.

2 Stephans, Richard H, Charles Braxton, and Maynard M. Stephans; Eastern Research Company, Inc.; Atmospheric Emissions From Offshore Oil and Gas Development and Production; EPA-450/3-77/026, June 1977

3 Craig, James D., and Kirk W. Sherwood; Economic Study of the Burger Gas Discovery, Chukchi Shelf, Northwest Alaska; U. S. Department of Interior, Minerals Management Service, Resource Evaluation Office. December 2004.

ATTACHMENT D

Supplement to BACT section of the Revised Discoverer Permit Application, February 23, 2009:

BACT analysis for the drilling mud de-gassing

In its May 4, 2009 submission to EPA, Shell provided a high-end estimate of the volatile organic compound (VOC) emissions from the Discoverer drilling cuttings while drilling. As noted above, these VOC emissions were estimated at 128 pounds per drilling season. Although this is a small emission, total VOC emissions are significant from the Discoverer and BACT analyses are required for all VOC source units on the Discoverer. It is apparent that, due to the very low emissions, cost for emission control of this source would be well above that which is considered cost-effective, but an analysis demonstrating this is provided here.

Drilling mud is used during the drilling process to lubricate and carry away heat from the bit and transport drill cuttings. During the drilling process and when the drill bit is passing through a hydrocarbon zone, trapped hydrocarbons in the drilled material will be carried to the surface (to the deck of the Discoverer) with the mud. Once the mud reaches the surface it is exposed to the atmosphere and is directed to the "ditch", then the shakers, and then the mud pit.

All of these have free surfaces and most trapped gas, which could be volatile hydrocarbons or water vapor or CO_2, flashes out of the mud to the atmosphere, at all of these locations. There are no covers in place to capture or control this minor hydrocarbon volume as part of normal drilling. The open surfaces are used for inspection of the mud returning from the drill bit. There is a system, known as a "gas buster" or mud gas separator, and the mud is temporarily routed to the gas buster when a certain minimum level of hydrocarbons are encountered during normal operations. This system handles mud containing normal levels of volatile hydrocarbons but is designed to withstand any unexpected surge in hydrocarbons, as a safety precaution from ignition / explosion on or in the drillship, and is capable of exhausting away from the drillship large volumes of gas. The exhaust is a 10 inch diameter pipe that vents at the top of the derrick, away from workers. The gas buster is only used for mud containing volatile hydrocarbons which would include emergency/unexpected situations and is not designed to handle the abrasion from the flowing mud that would occur from continuous use as part of a gas collection device.

To control all VOC emissions from mud degassing, the mud-handling system would need to be redesigned to collect gas from both the trench / shaker / mud pit and the gas buster, depending which route the mud was directed to, and the associated gas collection system would need to handle large volumes of gas, over 500 ft^3/min, associated with emergency and unexpected releases. But the gas collection system would normally process only minute amounts of gas, i.e., emissions at a rate of 128 lb. per season. With such a variable flow rate and the need to handle high flow rates under emergency and explosive situations, condensers, absorbers and rerouting to the incinerators (the air intakes of on-board combustion devices) would be technologically infeasible. The only control devices capable of such service are flares, as corroborated by a literature research of other exploration drilling operations.

Approximate costs for a flare are provided below using information from an EPA control cost manual,[1] Section 3.2, "VOC Destruction Controls," Chapter 1.6. This manual provides the cost for a small (2 inch nozzle) flare which would be considerably smaller than the 10 inch one needed for the Discoverer gas buster. Therefore the costs should be well below those for the Discoverer. This 2 inch nozzle flare cost is for on-land application, and not a salt environment. Additionally, costs for equipment, installation, operation and maintenance are substantially higher for ships than on land. The annualized 2 inch nozzle flare cost as of 2002 is listed as $61,800 per year (Table 2.13). At 100 percent control efficiency, this flare would oxidize 128 lb of VOC, which equates to a cost efficiency of approximately $1 million per ton of VOC removed, well above a level of cost effectiveness. Even if the control costs are in error by a factor of 10, the cost effectiveness would still be unacceptable.

1 *EPA Air Pollution Control Cost Manual, Sixth Edition, EPA 450-02-001*, January 2002

ATTACHMENT E

Supplement to BACT section 4.1.3.2 (Boilers and particulate controls) of the Revised Discoverer Permit Application, February 23, 2009

It is extremely rare to apply fabric filters and electrostatic precipitators (ESPs) to diesel-fueled combustion equipment because particulate matter emissions and collection efficiencies are low. With a fabric filter, flue gas is passed through a tightly woven or felted fabric, causing particulate matter in the flue gas to be collected on the fabric and the resulting collected particulate (called cake) by sieving and other mechanisms. Most of the particle collection is performed by the filter cake itself. Fabric filters may be in the form of sheets, cartridges, or bags, with a number of the individual fabric filter units housed together in a group.

PM_{10} and $PM_{2.5}$ emissions consist of two fractions: filterable and condensable. Due to the relatively high proportion of condensable particulate matter emissions (approximately 72 percent condensable according to AP-42), the majority of combustion particulate matter will not be collected by a fabric filter treating the flue gas. Also, due to the low particulate concentration, a cake will be slow to form resulting in poor collection efficiency. The low collection efficiency for diesel fueled units, the requirement for cooling of gas streams to capture the condensable component, and the small particle size all make implementing baghouse control on diesel-fueled engines and boilers impractical.

In an ESP, exhaust gas is introduced into an electric field that imparts a charge to the suspended particulate. The charged particulate then migrates to the charged plates where it is collected within the ESP. The low particulate concentration from diesel fuel combustion would not allow significant charge buildup on the particles, resulting in poor migration to the collecting plates. Based on this issue, ESPs are considered technically infeasible.

Good combustion practice has virtually always been determined BACT for particulate matter emissions from diesel-fueled boilers because baghouses and ESPs that are commonly applied to solid fuel-fired boilers are not effective on gaseous and diesel-fueled boilers.

ATTACHMENT F

Supplement to BACT section 4.1.3.3 (Incinerator and particulate controls) of the Revised Discoverer Permit Application, February 23, 2009

In April 2009, Shell retained G1 Development LLC to evaluate particulate matter control options for the incinerator. The review process considered technical feasibility and identified capital costs for dry and wet scrubber technologies and for a ceramic filter. Ultimately, G1 determined that the ceramic filter technology was the preferred technology because of space considerations, Arctic weather conditions, and superior collection efficiency. Table 3 provides a summary of G1's study.

However, all the control options examined were determined to exceed commonly accepted cost effectiveness criteria. Simplified cost-effectiveness calculations for a wet scrubber (the low cost and low performance option) and a ceramic filter (the higher cost and higher performance option) are attached as Tables 1 and 2. These tables indicate that a ceramic filter achieving 99 percent control of the estimated 0.53 tons of PM_{10} emissions from the incinerator would cost $66,000 per annual ton removed – even if the life of the ceramic filter is assumed to be 20 years. The annual cost of PM_{10} control using a venturie scrubber is $49,490 per ton based on 10 years and 90 percent control efficiency.

Both the low and high end of control options exceed commonly accepted cost effectiveness criteria.

Table 1. Venturi Scrubber Simplified Cost Effectiveness Calculation
Frontier Discoverer Incinerator

CAPITAL COSTS			
DIRECT COSTS		**COST**	**Source**
A. Purchased Equipment			
a. Venturi Scrubber Installed Cost		$150,000	G1 Develop.
b. Vessel Installed Cost		$0	
c. Pumps & Pump Motors Installed Cost		$0	
d. Duct Installed Cost		$0	
e. Cyclone Installed Cost		$0	
Primary Equipment Total Installed Cost		$150,000	
f. CEMS Installation		$0	
g. Instrumentation		$0	
h. Sales tax		$0	
i. Freight		$0	
B. Direct Installation Costs (included in Purchased Equipment Installed Costs)		--	
Retrofit factor (ease of retrofit)		1	
Total Direct Capital Cost [DCC]		$150,000	*Calculation*
INDIRECT COSTS			
C. Indirect Installation			
a. Engineering and Supervision		$0	
b. Construction and Field Expenses		$0	
c. Contractor Fee		$0	
d. Startup		$0	
e. Performance Testing		$0	
d. Contingencies		$0	
Total Indirect Costs [ICC]		$0	
D. Project Contingency ([DCC + ICC]*0.4)		$0	
Total Plant Cost [TPC] (DCC+ICC+Project Contingency)		$150,000	*Calculation*
E. Allowance for Funds During Construction		$0	
F. Royalty Allowance		$0	
G. Inventory Capital		$0	
Total Capital Investment [TCI]		$150,000	*Calculation*
Total Annualized Capital Costs [TACC] (20 years @ 7% interest)		**$21,357**	*Calculation*
DIRECT AND INDIRECT ANNUALIZED COSTS			
DIRECT OPERATING COSTS (DOC)			
K. Labor for operations		$0	
L. Supervisory Labor		$0	
M. Maintenance Labor and Costs (0.015*TCI)		$2,250	OAQPS
N. Electricity		$0	
INDIRECT OPERATING COSTS (IOC)			
P. Overhead		$0	
Q. Administration		$0	
R. Insurance		$0	
Total Direct and Indirect Annualized Costs [TDIAC] (DOC+IOC)		**$2,250**	*Calculation*
TOTAL ANNUALIZED COSTS [TAC] (TACC+TDIAC)		**$23,607**	*Calculation*
Uncontrolled emissions	tons/year	0.53	Application
Reduction from baseline	Percent	0.90	
Total Emissions Reduction	tons/year	0.48	*Calculation*
Cost per ton Conrolled	***$/ton***	**$ 49,490**	*Calculation*

OAQPS "EPA Air Pollution Cost Manual" Sixth Edition, January 2002, EPA/452/B-02-001
Office of Air Quaility Planning and Standards (OAQPS).

Table 2. Ceramic Filter Simplified Cost Effectiveness Calculation
Frontier Discoverer Incinerator

CAPITAL COSTS		
DIRECT COSTS	**COST**	**Source**
A. Purchased Equipment		
a. Ceramic Filter Installed Cost	$220,000	G1 Develop.
b. Vessel Installed Cost	$0	
c. Pumps & Pump Motors Installed Cost	$0	
d. Duct Installed Cost	$0	
e. Cyclone Installed Cost	$0	
Primary Equipment Total Installed Cost	$220,000	
f. CEMS Installation	$0	
g. Instrumentation	$0	
h. Sales tax	$0	
i. Freight	$0	
B. Direct Installation Costs (included in Purchased Equipment Installed Costs)	--	
Retrofit factor (ease of retrofit)	1	
Total Direct Capital Cost [DCC]	$220,000	*Calculation*
INDIRECT COSTS		
C. Indirect Installation		
a. Engineering and Supervision	$0	
b. Construction and Field Expenses	$0	
c. Contractor Fee	$0	
d. Startup	$0	
e. Performance Testing	$0	
d. Contingencies	$0	
Total Indirect Costs [ICC]	$0	
D. Project Contingency ([DCC + ICC]*0.4)	$0	
Total Plant Cost [TPC] (DCC+ICC+Project Contingency)	$220,000	*Calculation*
E. Allowance for Funds During Construction	$0	
F. Royalty Allowance	$0	
G. Inventory Capital	$0	
Total Capital Investment [TCI]	$220,000	*Calculation*
Total Annualized Capital Costs [TACC] (20 years @ 7% interest)	**$31,323**	*Calculation*
DIRECT AND INDIRECT ANNUALIZED COSTS		
DIRECT OPERATING COSTS (DOC)		
K. Labor for operations	$0	
L. Supervisory Labor	$0	
M. Maintenance Labor and Costs (0.015*TCI)	$3,300	OAQPS
N. Electricity	$0	
INDIRECT OPERATING COSTS (IOC)		
P. Overhead	$0	
Q. Administration	$0	
R. Insurance	$0	
Total Direct and Indirect Annualized Costs [TDIAC] (DOC+IOC)	**$3,300**	*Calculation*
TOTAL ANNUALIZED COSTS [TAC] (TACC+TDIAC)	**$34,623**	*Calculation*
Uncontrolled emissions tons/year	0.53	Application
Reduction from baseline Percent	0.99	
Total Emissions Reduction tons/year	0.52	*Calculation*
Cost per ton Conrolled ***$/ton***	**$ 65,986**	*Calculation*

OAQPS "EPA Air Pollution Cost Manual" Sixth Edition, January 2002, EPA/452/B-02-001
Office of Air Quaility Planning and Standards (OAQPS).

Table 3: Incinerator Control Technology Alternatives
Discoverer Teamtec Arctic Incinerator Application

Property	Technologies for Effective PM_{10} and $PM_{2.5}$ Control			
	Ceramic Fiber Baghouse	Dry Electrostatic Precipitator	Venturi	Wet Electrostatic Precipitator
Brief description	High temperature fibrous particulate filtering	High voltage wires driving particles to collector	Gas water quenched to saturation followed by high differential pressure drop water/air contact	Gas water quenched to saturation followed by high voltage wires driving particles to collector
Applied to incinerator control	Yes - land - and at least one ship incinerator	Yes - land	Yes - land	Yes - land
Nominal pressure drop, inches water column	7 to 14	2	7 to 8 (higher required if significant fine particles < 1 micron)	2
Design	Simple	Complex	Simple	Complex
Collection efficiency	90% +	75% at quoted size (90%+ for larger sizes)	90% for particles > 1 micron (Lower for < 1 micron)	75% at quoted size (90%+ for larger sizes)
Budgetary equipment capital costs, FOB factory	$230,000	$420,000	$150,000	$175,000
Capital Includes	Ceramic fiber baghouse flange to flange with 75 mm mineral wool insulation/trace heating and controls	Dry electrostatic precipitator flange to flange with shop insulation, power supply and controls	Venturi, separator, pumps, valves, and control system	Wet electrostatic precipitator flange to flange with power supply and ESP voltage controller
Solids discharge	Dry	Dry	Solids/water slurry	Solids/water slurry

Property	Technologies for Effective PM_{10} and $PM_{2.5}$ Control			
	Ceramic Fiber Baghouse	Dry Electrostatic Precipitator	Venturi	Wet Electrostatic Precipitator
Scrubber Size (not including separate vessels)	12.5 ft depth X 21.2 ft width X 15.6 ft height (including access platforms, ladder, inlet manifold, and discharge chutes)	11.5 ft depth X 16.8 ft width X 19.1 ft height (not including high voltage bus and inlet/outlet duct manifolds or access platforms)	1.7 ft diameter X 3.5 ft long (not including the in line separator)	4.5 ft depth X 4.5 ft width X 16.8 ft height (not including high voltage bus, inlet/outlet duct manifolds, access platforms)
Other significant vessel/space requirements	Compressed air receiver for reverse pulsing/ cleaning and discharge conveyer and/or drums	High voltage transformer	In line separator (could be integrated with stack) and pump	High voltage transformer, tank and pump
Gas cooling requirements	No	No	Yes to saturated water temperature (50 to 70 Deg C)	Yes to saturated water temperature (50 to 70 Deg C)
Air discharge characteristics	Hot and dry	Hot and dry	Saturated with water and possible icing issues	Saturated with water and possible icing issues
Solid particle issues	Potential problems with sticky particles	Potential problems with sticky particles	None known	None known

Property	Technologies for Effective PM_{10} and $PM_{2.5}$ Control			
	Ceramic Fiber Baghouse	Dry Electrostatic Precipitator	Venturi	Wet Electrostatic Precipitator
Maintenance	Change bags every 3 years (Expected bag life = 3-5 years) (System monitored via phone link by factory)	Initial tuning and fine tuning after 2 weeks operation (System monitored via phone link by factory) and annual inspection/cl eaning	None expected	Initial tuning
Corrosion	Maintaining hot avoids corrosion issues	Maintaining hot avoids corrosion issues	Metallurgy upgrades and/or water treating required	Metallurgy upgrades and/or water treating required
Utilities				
Electricity	240 volt/1 amp for control power and reverse pulse switching	480 volt/3 Phase/60 Hz at MCC Electricity for 9.5 KW transformer and controls, 120 Volt, 15 amp at the operator interface location	2 KW control power	480 Volts/3 Phase - 2.5 KW for ESP and controls
	Heat tracing of baghouse exterior (assumed required): 12.8 KW	Heat tracing of Insulators and hoppers (assumed required): 13.0 KW	Heat tracing required - estimate not supplied	Heat tracing required - estimate not supplied
	Rotary valves (if required): 0.4 KW + 3.5 KW for heat tracing	Hopper vibrators (assumed required): 0.6 KW	Pump: 3.7 KW	2 Pumps: 7.5 KW

Property	Technologies for Effective PM_{10} and $PM_{2.5}$ Control			
	Ceramic Fiber Baghouse	Dry Electrostatic Precipitator	Venturi	Wet Electrostatic Precipitator
	4.5 m U-tube conveyer (if required): 5.5 KW	Screw conveyer (if required): 2.7 KW		
Nominal water requirements, gpm	0	0	4 (3.5 evaporates for cooling) can be seawater but requires metallurgy upgrade	4 (3.5 evaporates for cooling) can be seawater but requires metallurgy upgrade
Water discharge rate, gpm	0	0	0.5 - could be lowered by concentrating solids in discharge with hydroclones, rotary vacuum filtration, etc	0.5 - could be lowered by concentrating solids in discharge with hydroclones, rotary vacuum filtration, etc
Other utility requirements	Dry compressed air at 90 psig (15 cubic meters per hour)	Dry compressed air at 80 psig (10 cubic meters per hour)		Dry air at >3 inches water column (340 cubic meters per hour for 2 insulator boxes)
Vendor Used for Data	Glosfume	McGill	Croll-Reynolds Fisher-Klosterman	Beltran
Assumptions				
Teamtec Incinerator Max Flowrate, acm/hr	12,000	12,000	12,000	12,000
Teamtec Incinerator Max Outlet Temperature, Deg C	350	350	350	350
Incinerator Emissions, lb/hr PM_{10}	1.13	1.13	1.13	1.13

Property	Technologies for Effective PM_{10} and $PM_{2.5}$ Control			
	Ceramic Fiber Baghouse	Dry Electrostatic Precipitator	Venturi	Wet Electrostatic Precipitator
Incinerator Emissions, lb/hr $PM_{2.5}$	0.97	0.97	0.97	0.97

ATTACHMENT G

Supplement to the impact analysis in the September 17, 2009 Comments on Proposed Discoverer/Chukchi Permit

The following impact analysis addresses quantitatively the impact from the ice management and OSR vessels approaching the Discoverer and passing through the exclusion zones for transfer of crew and supplies, as described in the September 17, 2009 comment document, Section 3.1. This activity would occur in both the Chukchi and Beaufort seas, and the following analysis of that activity is excerpted from the September 30, 2009 Beaufort Sea PSD permit application. The Beaufort Sea permit application section and table numbers are preserved to make it easy to refer to the Beaufort Sea analyses. The analysis demonstrates that the impacts from these activities would be less than the impacts from normal drilling activities and would be acceptable.

Other Discoverer / Chukchi Sea Operating Scenarios

There are several operating scenarios for which source locations and emissions would differ from that of normal drilling operation. These scenarios are expected to be infrequent and have lower emissions. Nonetheless, these scenarios are discussed and results of modeling of these scenarios are presented in the following sections. Because these scenarios are relatively short in duration, the air quality analyses were restricted to short term averaging periods only. A brief summary of the other operating scenarios is provided in Table 5-10.

Table 5-10: Summary of all Other Operating Scenarios.

Scenario Name	Analysis Performed	Description
Other Potential Scenarios	Quantitative	Other potential scenarios refers to situations in which either the anchor handler or the primary ice breaker would come closer to the Discoverer for non-ice breaking activities. A total of six possible ice management fleet configurations were modeled in this analysis. A qualitative analysis was selected because each of these six scenarios involve only the movement of either the anchor handler or primary ice breaker which can be realistically modeled for potential air quality impacts.
Tanker Modeling	Quantitative	A quantitative analysis for the Tanker was selected to show compliance with NAAQS and PSD increments. The Tanker operates beyond 25 miles of the Discoverer. The Tanker modeling shows compliance with all NAAQS and does not exceed any PSD increment.

Ice Breaker and Anchor Handler Re-supply

On occasion the ice breaker fleet may need additional supplies, personnel, or medical assistance from the Discoverer. This would require either the anchor handler or primary icebreaker to approach the Discoverer, and in effect dock (by dynamic positioning) for a short while, and then travel back to normal ice breaking locations. Two additional air quality impact analyses were developed for this scenario: one for anchor handler re-supply and another for primary ice breaker re-supply.

During these scenarios, the ship in transit would not be breaking ice and thus would operate at a reduced power setting much like the bow washing and anchor setting/retrieval scenarios. The emissions during this time were calculated by assuming the main engines of the ship would operate at a maximum of 20 percent load, but to simulate worst-case conditions, the ship's generators and heaters/boilers are assumed to be operating at 100 percent power and the ship's incinerator is also assumed to be operating at its maximum feed rate of 154 lb/hr.

For the anchor handler re-supply case, it was estimated that the anchor handler would take approximately 15 minutes to travel from its typical location to the Discoverer. It would then remain next to the Discoverer for approximately 30 minutes. After the transfer is complete, the anchor handler would then travel an additional 15 minutes back to resume normal ice breaking duties.

To model the anchor handler's transit, a series of 22 volume sources (spaced 50 meters apart) were placed from the center of the anchor handler's normal location to alongside the Discoverer as shown in Figure 5-8. The center of the anchor handler's normal location was selected to simulate worst case operations. An additional volume source was placed directly alongside the Discoverer to represent the stationary loading/unloading. Emission rates for each volume source were calculated based on the amount of time to be spent in each location. As such, the volume source directly next to the Discoverer has a much greater emission rate than the others since it the anchor handler would be idling here for an estimated 30 minutes. The results from the Anchor Handler Re-Supply scenario are summarized in Table 5-15.

Table 5-15: Anchor Handler Re-Supply Results

Pollutant	Averaging Period	Class II Significance Level (SIL) ($\mu g/m^3$)	Maximum Predicted Concentration ($\mu g/m^3$)	Distance Exceeding SIL (km)
PM_{10}	24-hour	5	18.8	31.8
$PM_{2.5}$	24-hour	None	18.5	NA
SO_2	24-hour	5	33.3	45.1
	3-hour	25	187.7	21.3
CO	8-hour	500	369.3	0
	1-hour	2000	987.8	0

During primary ice breaker re-supply, it was estimated that the primary ice breaker would take approximately 45 minutes to travel from its typical location to the Discoverer. Like in the anchor handler re-supply case, it would then dock for approximately 30 minutes. After the transfer is complete, the primary ice breaker would travel an additional 45 minutes back to resume normal ice breaking duties.

To model the primary ice breaker's transit, a series of 99 volume source (spaced 50 meters apart) were placed from the center of the primary ice breaker's typical location to alongside the Discoverer as shown in Figure 5-9. Like in the anchor handler re-supply, the center of the primary ice breaker's normal location was selected to simulate worst case operations. An additional volume source was placed directly alongside the Discoverer to represent the stationary loading/unloading. The emission rate for each volume source was calculated based

on the amount of time to be spent in each location. The results from the Ice Breaker Re-Supply scenario are summarized in Table 5-16 below.

Table 5-16: Ice Breaker Re-Supply Peak Results.

Pollutant	Averaging Period	Class II Significance Level (SIL) (μg/m³)	Maximum Predicted Concentration (μg/m³)	Distance Exceeding SIL (km)
PM_{10}	24-hour	5	20.8	32.7
$PM_{2.5}$	24-hour	None	19.6	NA
SO_2	24-hour	5	33.9	45.1
	3-hour	25	172.6	24.2
CO	8-hour	500	429.3	0
	1-hour	2000	735.6	0

Figure 5-8: Anchor Handler Re-Supply Receptors and Sources.

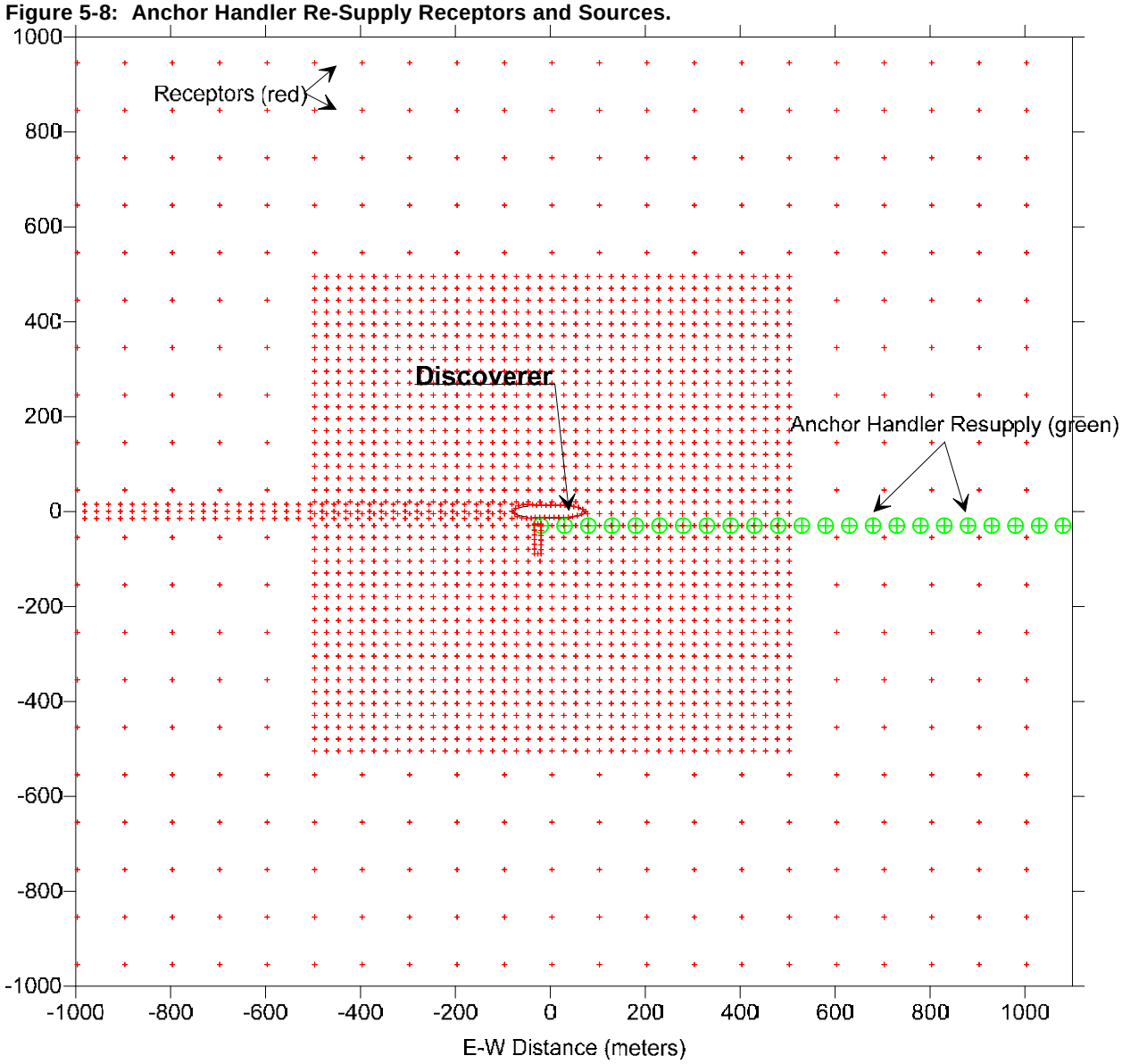

Figure 5-9: Primary Ice Breaker Re-Supply Receptors and Sources.

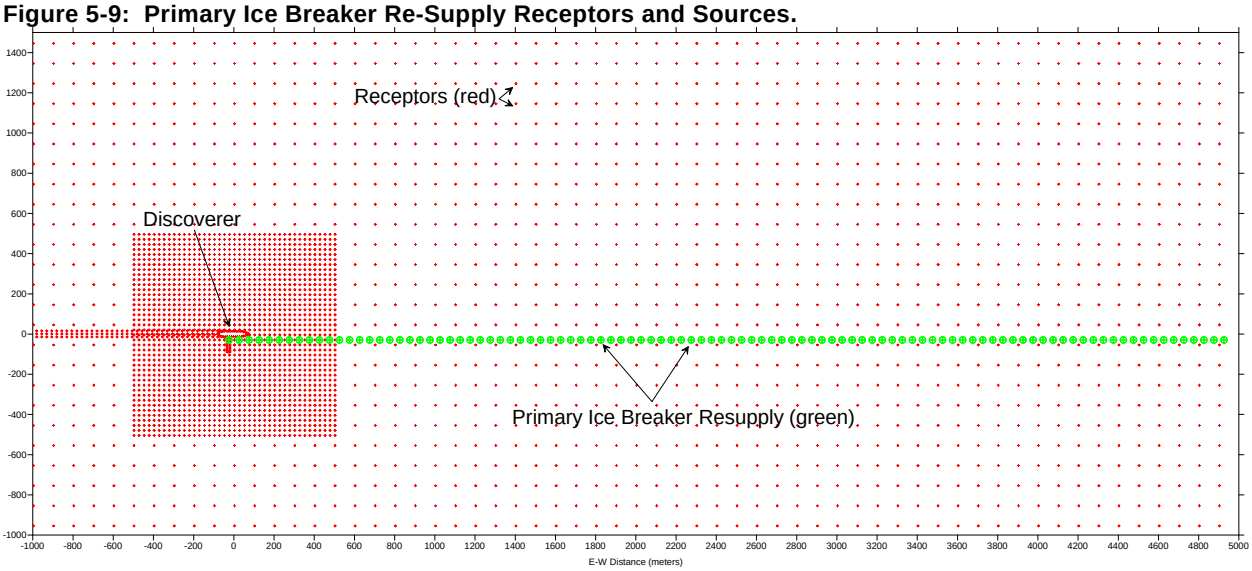

Other Potential Scenarios

In addition to the known but infrequent operating scenarios discussed above, Shell anticipates there would be situations where the ice management vessels would need to move to different positions with respect to the Discoverer. In some cases, the ice breaker and anchor handler may need to come significantly closer to the Discoverer than under normal ice management activities.

These scenarios are analyzed and provided to avoid unnecessary restrictions on associated fleet location. This application analyzes the worst-case operating conditions for associated fleet vessels. For instance, for ice breakers worst-case emissions occur when they are being used to break ice. The vessels have no other duties that would produce comparable emissions to the worst-case scenarios modeled, nor is there any other operational condition under which associated fleet vessels would be operating at full load during periods when they might be closer to the Discoverer than under normal operation. If more proximate operation is required under the circumstances, it would be under low power sufficient to simply propel the vessel. The following scenarios, in which the icebreaker and anchor handler are modeled at 20 percent loads, are provided to provide a further technical basis for the conclusion that such other potential scenarios do not present potential impact above the worst-case impacts modeled.

In order to demonstrate compliance with ambient standards during these scenarios, air quality impact analyses have been performed for a total of six additional ice breaker fleet configurations.

The six additional ice management vessel operating arrangements were designed to represent situations when either the anchor handler or the primary ice breaker operates closer to the Discoverer than under normal ice management operations. Scenarios one through three simulate occasions when the anchor handler operates closer to the Discoverer, while four through six simulate occasions when the primary ice breaker would operate closer to the Discoverer. The three cases for each ship represent different distances upwind from the Discoverer:

- Scenarios one and four depict a ship operating directly to the side of the Discoverer.
- Scenarios two and five depict operations 100 meters upwind of the Discoverer.
- Scenarios three and six depict operations 500 meters upwind of the Discoverer.

The results of these scenarios are summarized in Table 5-20. Figures 5-12 and 5-13 depict source and receptor locations for each scenario.

Table 5-20: Peak Concentrations for Other Potential Scenarios.

Scenario	Pollutant	Averaging Period	Class II Significance Level (SIL) (µg/m³)	Maximum Predicted Concentration (µg/m³)	Distance Exceeding SIL (km)
1	PM_{10}	24-hour	5	19.3	33.5
	$PM_{2.5}$	24-hour	None	18.4	NA
	SO_2	24-hour	5	32.8	45.1
		3-hour	25	149.1	22.4
	CO	8-hour	500	360.1	0
		1-hour	2000	613.9	0
2	PM_{10}	24-hour	5	19.3	33.5
	$PM_{2.5}$	24-hour	None	18.4	NA
	SO_2	24-hour	5	32.8	45.1
		3-hour	25	149.1	22.4
	CO	8-hour	500	366.8	0
		1-hour	2000	613.7	0
3	PM_{10}	24-hour	5	19.3	33.4
	$PM_{2.5}$	24-hour	None	18.4	NA
	SO_2	24-hour	5	32.8	45.1
		3-hour	25	148.9	22.4
	CO	8-hour	500	359.5	0
		1-hour	2000	612.9	0
4	PM_{10}	24-hour	5	20.0	34.5
	$PM_{2.5}$	24-hour	None	19.0	NA
	SO_2	24-hour	5	33.3	48.9
		3-hour	25	149.5	22.6
	CO	8-hour	500	361.8	0
		1-hour	2000	615.4	0
5	PM_{10}	24-hour	5	20.0	34.4
	$PM_{2.5}$	24-hour	None	19.0	NA
	SO_2	24-hour	5	33.3	48.9
		3-hour	25	149.5	22.6
	CO	8-hour	500	362.8	0
		1-hour	2000	615.3	0
6	PM_{10}	24-hour	5	20.0	34.3
	$PM_{2.5}$	24-hour	None	19.0	NA
	SO_2	24-hour	5	33.3	48.9
		3-hour	25	149.4	22.5
	CO	8-hour	500	361.3	0
		1-hour	2000	614.9	0

Figure 5-12: Scenarios 1-3 Receptors and Sources.

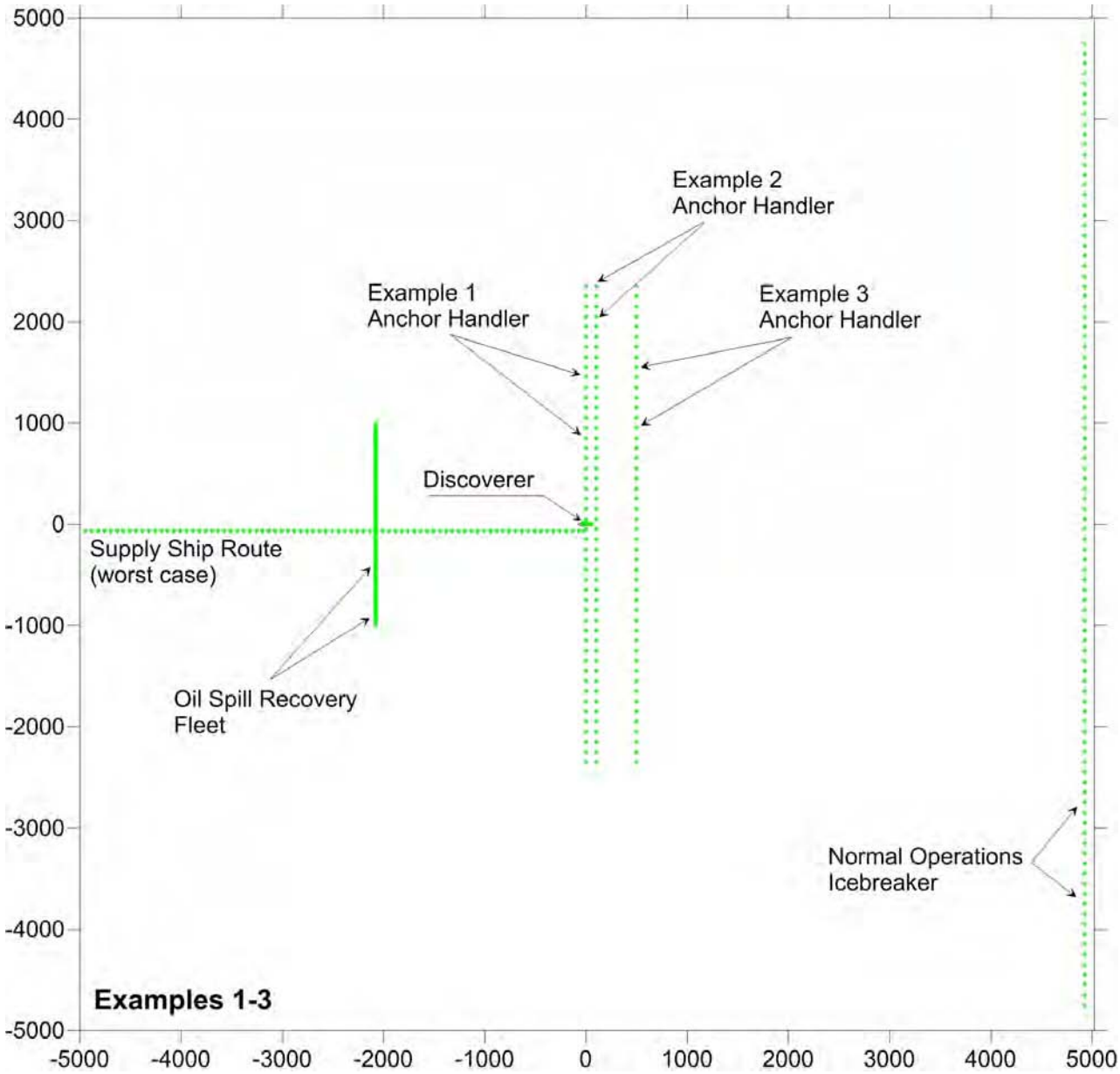

Figure 5-13: Scenarios 4-6 Receptors and Sources.

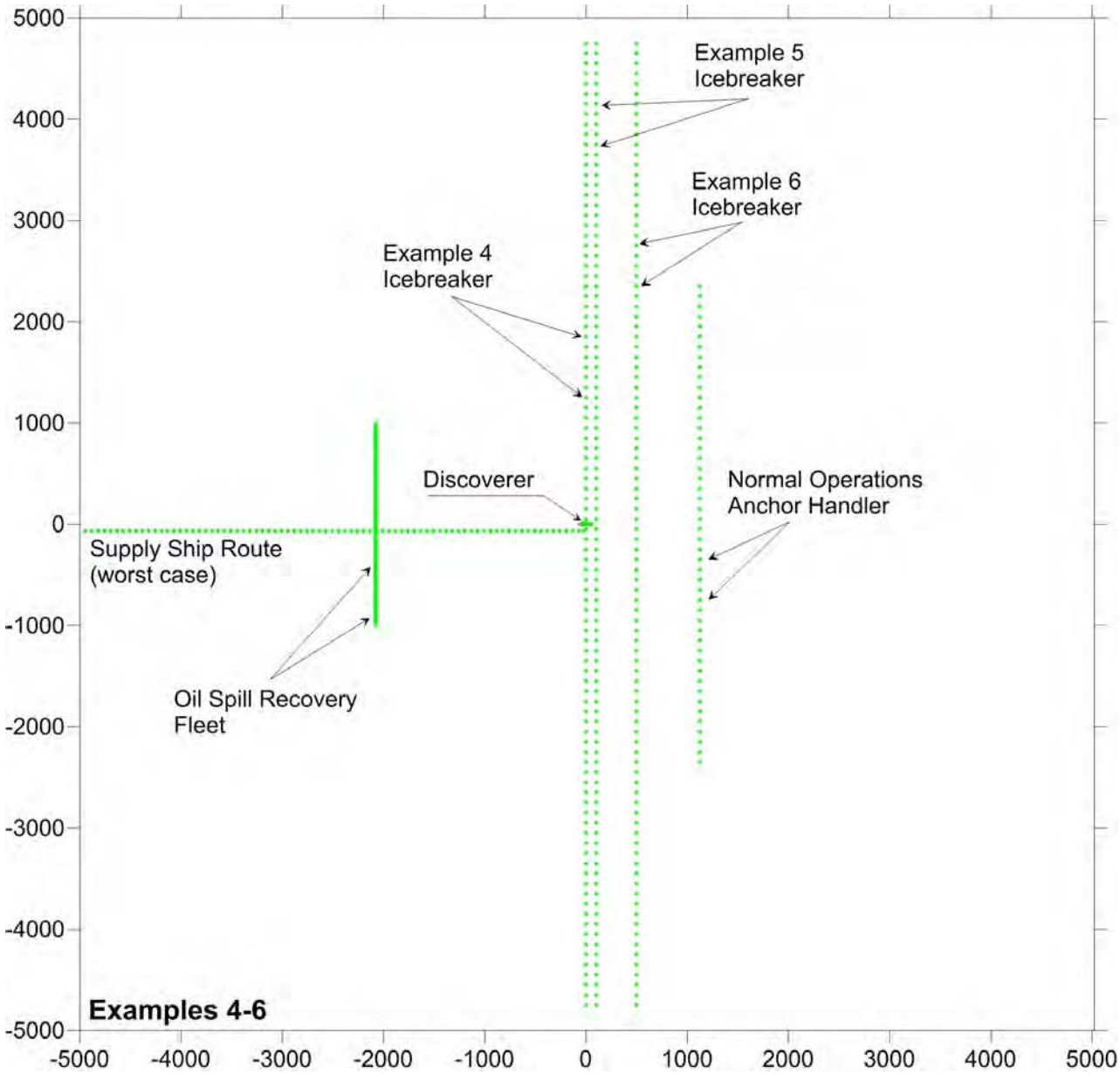

Summary of Maximum Short-term Concentrations

Table 5-21 identifies the maximum short-term concentrations attributable to the range of possible operating scenarios discussed above and the distance to the point where predicted concentrations no longer exceed the SILs. The maximum annual concentrations from these non-normal activities are below those for presented in the September 17, 2009 document for normal operations.

Table 5-21: Maximum Predicted Short-term Concentrations From all Operating Scenarios

Pollutant	Averaging Period	SIL ($\mu g/m^3$)	Maximum Concentration Scenario	Maximum Predicted Concentration ($\mu g/m3$)	Maximum SIL Distance Scenario	Maximum Distance Exceeding SIL (km)
PM_{10}	24-hour	5	Ice Breaker Re-Supply	20.8	Ice breaker Scenario 4	34.5
$PM_{2.5}$	24-hour	None	Ice Breaker Re-Supply	19.6	N/A	N/A
SO_2	24-hour	5	Ice Breaker Re-Supply	33.9	Ice breaker Scenario 4	48.9
	3-hour	25	Anchor Handler Re-Supply	187.7	Ice Breaker Re-Supply	24.2
CO	8-hour	500	Nanuq Refuel	452.5	Anchor setting/retrieval	0
	1-hour	2000	Anchor Handler Re-Supply	987.8	N/A	0

ATTACHMENT H

Replacement for Attachment C of the December 9, 2009 application supplement (adding footnote 3)

MEMORANDUM

December 9. 2009 (rev. December 11, 2009)

Absence of Justification for Source Redefinition in BACT Analysis For Shell Chukchi Sea Air Permit

Introduction

Commenters on the proposed permit suggest that, in analyzing BACT for the Generator Diesel IC Engines and the smaller Diesel IC Engines on the Discoverer, Shell must consider in its Step 1 analysis the alternative of "repowering," i.e., replacing some or all of those engines with Tier 3 engines. *See* Comments of AWEC et al. at 18.[1] In addition, Commenters assert that:

> The fact that Shell has elected to pursue its operations using an old drill ship – rather than incurring the cost of utilizing or constructing a new one – cannot result in the automatic conclusion that retrofitting or replacing certain engines as part of the application of BACT is not economical or technologically feasible. This is not defensible without at least a discussion of the costs associated with using the Discoverer versus a newer or newly constructed drill ship and/or engines as compared to the costs of retrofitting or updating engines on the Discoverer.

Id. at 17.

However, in step 4 of the BACT process, the cost-effectiveness of replacing engines on the Discoverer with newer units must be analyzed under the same BACT methodology that applies to all control technologies. The relevant measure is how much it would cost to achieve a given reduction in emissions from the source, as that source is defined by the PSD permit applicant.

Discussion

Even if it were somehow possible to compare those emissions-reduction costs with the costs associated with using a "newer or newly-constructed drill ship," the latter cost is not relevant to the Step 4 analysis to determine BACT. This is because Shell has properly defined the OCS source for which it seeks a permit as the Discoverer, a specific drillship with specific characteristics. The Clean Air Act would not require consideration of using a different drillship as potential BACT at

[1] In fact, the Discoverer's main generator engines and several of its other smaller engines are already Tier 3 engines.

Step 1. Using another drillship for the proposed exploration program is not a candidate control technology under EPA's BACT guidance or under relevant legal rulings. Commenters' contention that the costs of a different drillship are relevant to the cost-effectiveness of candidate control technologies – e.g., engine replacement on the Discoverer – would be tantamount to requiring Shell to fundamentally redesign the source. That would be contrary to strong EPA policies allowing the permit applicant to define the source to which a BACT analysis is then applied

The EAB has recently reiterated that, in determining what BACT is for a source, EPA does not generally require a source to change its basic design. *In re Desert Rock Energy Company, LLC,* PSD Appeal Nos. 08-03 et al., September 24, 2009, at 59 (*citing In re Knauf Fiber Glass GMBH,* 8 E.A.D. 121, 136 (EAB 1999)). The EAB noted that: "'Historically, EPA has not considered the BACT requirement as a means to redefine the design of the source when considering available control alternatives'." *Id.* at 59-60 (*quoting* NSR Manual at B.13-.14).

Certainly, Region 10 had broad discretion not to require Shell to evaluate other drillships as potential control technologies at step 1 of the BACT process. It is "clear that the permitting authority is entitled to wide latitude in how broad a BACT analysis it wishes to conduct in this regard." *In re Hawaiian Commercial & Sugar Co.* 4 E.A.D. 95, 100 (EAB 1992); *see also Sierra Club v. Prairie State* (7th Cir. 2007). EPA's brief to the Board in *Prairie State* explained that the policy "reflects the Agency's longstanding judgment that there should be limits on the degree to which permitting authorities can dictate the design and scope of a proposed facility through BACT analysis." *See Prairie State* at 24. The touchstone of EPA's approach to BACT is a "policy against redefining the basic design of the source in the BACT analysis." *Id.*

As the Board and the Seventh Circuit affirmed in the *Prairie State* case, it is clear that BACT does not require that a source be "redesigned from the ground up." *See Sierra Club v. U.S. EPA*, 499 F.3d 653 (7th Cir. 2007) (explaining that "EPA's position is that 'best available control technology' does not include redesigning the plant proposed by the permit applicant" and that "a difference between this case and our nuclear hypothetical is that a plant designed to burn coal cannot run on nuclear fuel without being redesigned from the ground up," and concluding, that even a lesser redesign was beyond the BACT Step 1 analysis). Instead, permit conditions are imposed on the source as the applicant defines it. *Desert Rock* at 60; *Prairie State* at 29. "Looking in the first instance to how the permit applicant defines the proposed facility's purpose or basic design in its application not only harmonizes the BACT definition with the permit application process . . . but also is consistent" with the policy against redefining the source." *Prairie State* at 29.

The applicant's design of the source includes the "applicant's purpose or basic design of the proposed facility." *Desert Rock* at 64 n. 61 (*quoting Prairie State* at

28). Here, however, commenters are proposing a "redesign" of the source in which literally absolutely nothing of the original proposed source would remain. Requiring consideration of a completely different drill vessel would be the equivalent of defining the purpose and basic design as "drilling for oil" – the equivalent of the *reductio ad absurdum* hypotheticals in *Prairie State* and *Sierra Club* in which the source is redefined by identifying the purpose of the facility as "the production of electricity, from coal," *Prairie State* at 28, or by imposing "clean fuel" requirements so as to require construction of a nuclear or hydroelectric facility instead, *see Sierra Club*. If there is such a thing as "source redefinition" – and EPA's policy, the Board's decisions, and the relevant affirming federal case law makes clear that there is – something must remain of the original proposed source. *See Sierra Club* ("We find it significant that all parties here, including Petitioners, agree that Congress intended the permit applicant to have the prerogative to define certain aspects of the proposed facility that may not be redesigned through application of BACT and that other aspects must remain open to redesign through the application of BACT.")

Neither *Desert Rock* nor any other EAB decision would support consideration of a different drill ship as potential BACT. In *Desert Rock* the Board found that the record did not support the Region's decision not to consider integrated gasification combined cycle (IGCC) technology in step 1 of its BACT analysis for the applicant's proposed coal-fired power plant. EAB noted that IGCC had been considered a potentially applicable control technique under step 1 for "coal-fired electric generating plants" in two prior permits the Board had reviewed. *Id*. at 57. Additionally, the applicant itself identified IGCC as one of several technologies that would be "consistent with the proposed facility's purpose, objective, or basic design," and thus would not improperly "redefine the source." *Id*. at 65.[2] (The applicant instead omitted IGCC from its BACT analysis because the technology is not "available" or "commercially viable." *Id*. at 67.) The Board found that, in light of the applicant's admission that IGCC would be consistent with the basic design of the power plant, and IGCC's consideration in prior BACT analyses for power plants, the Region did not adequately explain why IGCC would be redefining the source. *Id*.

---

[2] "To determine whether the Region properly concluded that IGCC would redefine the source in this case, keeping in mind that the Region has broad discretion on this issue, the Board first looks at the administrative record to see how the applicant defined its 'goal, objectives, purpose, or basic design' for the proposed Facility in its application. The Board then looks at whether the Region took a 'hard look' at the applicant's stated purpose to determine which design elements were inherent to the applicant's basic purpose or objective and which elements could be changed to achieve pollutant emissions reductions without disrupting the purpose." *Id*. at 65.

Unlike the applicant in *Desert Rock*, Shell has consistently defined the proposed source as the Discoverer--not a different drillship – throughout the process. *See e.g.* Shell's Initial Application and EPA's Statement of Basis. EPA's Statement of Basis (at 20) explains: "Shell intends to implement their Chukchi Sea exploration drilling program through the use of the Frontier Discoverer drillship and the Associated Fleet." Moreover, even if one were to use the absurd extreme purpose of "drilling for oil" as the basis for a BACT analysis, another drillship would not qualify as BACT. Shell's application explains in detail the unique attributes of the Discoverer for the proposed drilling operations, including mobility, stability, drilling capability, ability to rotate to face into the wind while anchored, fuel capacities, accommodations, deck layout, and countless other features. [3] EPA can appropriately conclude, after taking a hard look at the issue, that requiring Shell to use a different drill ship, with different characteristics, would not be consistent with BACT requirements.

---

[3] Shell specified the Frontier Discoverer as the drillship for use in the Arctic waters off the coast of Alaska because of two key features: its ice reinforced hull and its turret mooring system. There are very few rig choices for drilling activities in the Arctic, because of the lack of rigs that can operate in open water where ice is present. The Discoverer has an ice reinforced hull, which was accomplished by the addition of sponsons.

Moored drilling rigs have a proven record for executing drilling operations in a manner that is safe and efficient in Arctic waters at the depths found at Shell's planned drilling locations. Some other drillships can operate in these sea ice conditions, but they are dynamically positioned and are designed to operate in deeper water than is present at Shell's planned drilling locations. The use of dynamic positioning in these shallower waters is not a proven technology. Some bottom-founded drillships also can operate in sea ice, but the water at these locations is too deep for any bottom founded arctic drilling rig to set down. Moreover, the fact that Discoverer is moored also allows for departure off of a drilling location in the event that ice or weather has the potential to cause harm to the vessel.

Turret mooring, which is also a proven technology, further reduces the risk to the vessel because it allows the bow of the vessel to be turned into the wind while the mooring system, blowout preventer (BOP) and marine riser system maintain a constant orientation with respect to the seafloor. This reduces hull exposure to maximum wave features which, in turn, reduces heel, pitch, and roll. This feature also provides the minimum hull cross-section exposure to ice that may be driven by wind and currents toward the vessel. Because of hull configuration, heave may be reduced as well due to compensating sea conditions (e.g., roll or chop from another direction). Finally this puts the mooring wires below the water free surface to lower the potential of ice impact or accretion.

Thus the Discoverer is uniquely suitable among drillships for the drilling operations under specific conditions and at specific locations that would be authorized by the OCS air permit that Shell seeks.

Conclusion

Commenters contend that Shell should be required to compare the per-ton costs of emissions reductions from replacing some engines on the Discoverer with per-ton costs of reductions resulting from using a hypothetical alternate drill ship that has such engines. But to require this comparison would effectively require Shell to consider a fundamentally altered design for the proposed source. Region 10 can properly reject this contention and in its review of Shell's BACT analysis can properly rely on cost data provided below for re-powering the Discoverer to determine in step 4 whether this potential control technology is cost-effective.

ATTACHMENT I

Description of the anchor setting and retrieval processes for the Discoverer

This attachment supplements the application with a more detailed description of a typical anchor setting and anchor retrieval process, as well as the emergency anchor disconnection process, for the Frontier Discoverer drillship.

Setting of Anchors: Anchors are set using an anchor handling vessel. The anchor and associated equipment (the anchoring assembly) is placed, or carried, on the anchor handler. The free end of the mooring line is passed from the drillship to the anchor handler, where the mooring line is connected to the anchoring assembly. The line and assembly are then transported to the location of the anchor setting point, where the anchor is placed on the seabed. The anchor is lowered to the seabed using a pennant line. Once the anchor is placed at the appropriate location on the seabed the anchor wire is pulled, using a winch, on the drillship until a pre-described tension is achieved. This tension is held (the anchor allowed to soak) for a pre-described amount of time. The tension and the soak time are based on location specific criteria. Once this is complete the tension is locked into the system using a break on the mooring line drum of the winch. This process is repeated in a pattern of anchors that are run in opposite directions. The tension and position of the mooring lines are adjusted as subsequent lines are run to ensure that no line is over-tensioned. Finally, once there are enough lines out to control the position of the ship with the mooring lines, the vessel is put into a position and mooring line tensions are adjusted to allow operations to be undertaken on the well or at the well location. If all the lines are not yet out, anchors are run as described above and the various tensions of the mooring lines adjusted accordingly.

If a single anchor at a specified location is not able to hold with the necessary tension then a second anchor is attached in series (called a piggyback) to increase the holding power.

Retrieval of Anchors: Anchors are retrieved from the seabed by the anchor handling vessel. Initially, the tension in a single mooring line is released by the. Next, the anchor retrieval is accomplished by pulling the anchor to the surface using the buoyed pennant line that is attached to the anchor or by using a "chase" line from the drillship. Once the anchor is pulled to the surface and the associated equipment is removed from the anchor, the mooring line is spooled back onto the drums that are onboard the drillship. This spooling occurs while the anchor handling vessel holds tension on the line to ensure that the wire is retrieved in an orderly manner. This process is repeated in a pattern of anchors that are run in opposite directions. The anchor tension in all lines will be adjusted as the process progresses to ensure that the overall tension is managed (in essence one line does not see excessive tension or the forces on the drillship do not represent a bias to move the drillship in one direction versus another).

Emergency or Contingency Disconnection of Anchors: As part of the ice management process for operations in Alaska, there is the ability to quickly disconnect the mooring lines from the anchors by activating the Rig Anchor Releases (RARs). The RARs are considered the primary emergency disconnect method. If emergency disconnect is necessary, the RARs are activated one at a time

and the lines spooled back onto the vessel. This leaves the anchors on seabed to be retrieved later by the anchor handler, using the process described above. As a backup, a secondary emergency disconnect option is available. If necessary, the break on the mooring winches can be released allowing the onboard lines to "spool off" if ice pushes the drillship off location. This secondary option is designed to be used only in an extreme emergency situation, if necessary to protect the people onboard the vessel, because the lines are left on bottom and are likely to either be damaged or tangled.

From:	Rodger Steen
To:	EPA10 - Dave Bray;
cc:	"Mark Schindler"; Shell - Lance Tolson;
	"Kirk Lilley";
Subject:	Wainwright PM2.5 analysis
Date:	Wednesday, December 16, 2009 4:14:07 PM
Attachments:	Wainwright PM2.5 precip & wind stats.pdf

Wainwright PM2.5 &PM10 Baseline Data and Effect of Local Fugitive Dust Sources

	Daily PM2.5 Concentration (ug/m3)			Daily PM10 Concentration (ug/m3)		
	# Days	Average	Maximum	# Days	Average	Maximum
Precipitation Days [3]						
Non-High Wind Days [1]	52	2.8	7.0	54	13.4	54.0
High Wind Days [2]	6	3.8	7.0	4	13.8	28.0
Non-Precipitation Days [4]						
Non-High Wind Days [1]	133	2.7	11.0	126	15.7	91.0
High Wind Days [2]	36	6.1	23.0	35	20.3	114.0

[1] Days with less than 4 hours of winds greater than 10 meters/second.

[2] Days with at least 4 hours of winds greater than 10 meters/second.

[3] These days fall within the two day periods (on that day or on the previous day) where there is total precipitation > 0.01"

[4] These days fall within the two day periods (on that day or on the previous day) where there is total precipitation < 0.01"

From:	Rodger Steen
To:	EPA10 - Dave Bray;
cc:	"Sabrina Pryor"; "Octane - Mark Schindler"; "Kirk Lilley"; Duane Siler;
Subject:	Discoverer incinerator emissions
Date:	Friday, December 18, 2009 4:50:49 PM
Attachments:	Discoverer Chukchi Incinerator_20091218.pdf

Air Sciences Inc.	PROJECT TITLE: Shell Offshore, Inc.	BY: S. Pryor	
ENGINEERING CALCULATIONS	PROJECT NO: 180-15-1	PAGE: 1	OF: 1
	SUBJECT: Discoverer Emissions-AK OCS	DATE: September 17, 2009	

Municipal waste combustor organics (measured as total tetra-through octa-chlorinated dibenzo-p-dioxins and dibenzofurans) SEL 3.50E-06 ton/yr Below SEL

Incinerators — Maximum Emissions (lb/hr)

Unit ID	Description	Make/Model	Rating	Polychlorinated dibenzo-p-dioxins	Polychlorinated dibenzofurans	Total
FD-23	Incinerator	TeamTec/GS500C	276 lb/hr	1.25E-08	8.83E-08	1.01E-07
Ice Breaker	Incinerator		154 lb/hr	6.96E-09	4.93E-08	5.62E-08
Anchor Handler	Incinerator		151 lb/hr	6.84E-09	4.84E-08	5.52E-08
OSR Main Ship	Incinerator		125 lb/hr	5.65E-09	4.00E-08	4.57E-08
				3.19E-08	2.26E-07	2.58E-07

All Units 168 days/yr 4032 hrs/yr
FD-23 300 lb/trash per day — Maximum Emissions (ton/yr)

Unit ID	Description	Make/Model	Rating	Polychlorinated dibenzo-p-dioxins	Polychlorinated dibenzofurans	Total
FD-23	Incinerator	TeamTec/GS500C	276 lb/hr	1.14E-09	8.06E-09	9.20E-09
Ice Breaker	Incinerator		154 lb/hr	1.40E-08	9.93E-08	1.13E-07
Anchor Handler	Incinerator		151 lb/hr	1.38E-08	9.76E-08	1.11E-07
OSR Main Ship	Incinerator		125 lb/hr	1.14E-08	8.06E-08	9.20E-08
				4.03E-08	2.86E-07	**3.26E-07**

Emission Factors	EF	Reference
Polychlorinated dibenzo-p-dioxins	4.52E-11 lb/lb	There are no emission factors specific to a municipal waste combustor with excess air and no controls. The larger of SCC 50100107, Modular Excess Air Combustor, Electrostatic Precipitator and SCC 50300111, industrial solid waste rotory water wall incinerator with no controls is used here, which are those for SCC 50300111. EPA WebFIRE.
Polychlorinated dibenzofurans	3.20E-10 lb/lb	

Municipal waste combustor metals (measured as particulate matter) SEL 15 ton/yr Below SEL

Incinerators — Maximum Emissions (lb/hr)

Unit ID	Description	Make/Model	Rating	PM	As	Cd	Cr	Hg	Ni	Pb	Total Metals
FD-23	Incinerator	TeamTec/GS500C	276 lb/hr	3.46	6.03E-04	1.50E-03	1.24E-03	7.73E-04	1.08E-03	2.94E-02	3.46E-02
Ice Breaker	Incinerator		154 lb/hr	1.93	3.36E-04	8.39E-04	6.91E-04	4.31E-04	6.04E-04	1.64E-02	1.93E-02
Anchor Handler	Incinerator		151 lb/hr	1.90	3.30E-04	8.24E-04	6.78E-04	4.23E-04	5.94E-04	1.61E-02	1.90E-02
OSR Main Ship	Incinerator		125 lb/hr	1.57	2.73E-04	6.81E-04	5.61E-04	3.50E-04	4.91E-04	1.33E-02	1.57E-02
				8.86	1.54E-03	3.85E-03	3.17E-03	1.98E-03	2.77E-03	7.52E-02	8.85E-02

All Units 168 days/yr 4032 hrs/yr
FD-23 300 lb/trash per day — Maximum Emissions (ton/yr)

Unit ID	Description	Make/Model	Rating	PM	As	Cd	Cr	Hg	Ni	Pb	Total Metals
FD-23	Incinerator	TeamTec/GS500C	276 lb/hr	0.32	5.51E-05	1.37E-04	1.13E-04	7.06E-05	9.89E-05	2.68E-03	3.16E-03
Ice Breaker	Incinerator		154 lb/hr	3.90	6.78E-04	1.69E-03	1.39E-03	8.69E-04	1.22E-03	3.31E-02	3.89E-02
Anchor Handler	Incinerator		151 lb/hr	3.83	6.66E-04	1.66E-03	1.37E-03	8.54E-04	1.20E-03	3.25E-02	3.82E-02
OSR Main Ship	Incinerator		125 lb/hr	3.16	5.51E-04	1.37E-03	1.13E-03	7.06E-04	9.89E-04	2.68E-02	3.16E-02
				11.20	1.95E-03	4.86E-03	4.00E-03	2.50E-03	3.50E-03	9.51E-02	**1.12E-01**

Emission Factors

	EF	EF	Reference
PM	2.51E+01 lb/ton	1.26E-02 lb/lb	AP42-Table 2.1-2-For Mass Burn And Modular Excess Air Combustors 10/96
As	4.37E-03 lb/ton	2.19E-06 lb/lb	AP42-Table 2.1-2-For Mass Burn And Modular Excess Air Combustors 10/96
Cd	1.09E-02 lb/ton	5.45E-06 lb/lb	AP42-Table 2.1-2-For Mass Burn And Modular Excess Air Combustors 10/96
Cr	8.97E-03 lb/ton	4.49E-06 lb/lb	AP42-Table 2.1-2-For Mass Burn And Modular Excess Air Combustors 10/96
Hg	5.60E-03 lb/ton	2.80E-06 lb/lb	AP42-Table 2.1-2-For Mass Burn And Modular Excess Air Combustors 10/96
Ni	7.85E-03 lb/ton	3.93E-06 lb/lb	AP42-Table 2.1-2-For Mass Burn And Modular Excess Air Combustors 10/96
Pb	2.13E-01 lb/ton	1.07E-04 lb/lb	AP42-Table 2.1-2-For Mass Burn And Modular Excess Air Combustors 10/96

Municipal waste combustor acid gases (measured as sulfur dioxide and hydrogen chloride) SEL 40 ton/yr Below SEL

Incinerators — Maximum Emissions (lb/hr)

Unit ID	Description	Make/Model	Rating	SO_2	HCl	Total
FD-23	Incinerator	TeamTec/GS500C	276 lb/hr	0.35	8.83E-01	1.23
Ice Breaker	Incinerator		154 lb/hr	0.10	4.93E-01	0.59
Anchor Handler	Incinerator		151 lb/hr	0.10	4.84E-01	0.58
OSR Main Ship	Incinerator		125 lb/hr	0.16	4.00E-01	0.56
				0.69	2.26	2.95

All Units 168 days/yr 4032 hrs/yr
FD-23 300 lb/trash per day — Maximum Emissions (ton/yr)

Unit ID	Description	Make/Model	Rating	SO_2	HCl	Total
FD-23	Incinerator	TeamTec/GS500C	276 lb/hr	0.03	0.08	0.11
Ice Breaker	Incinerator		154 lb/hr	0.19	9.93E-01	1.19
Anchor Handler	Incinerator		151 lb/hr	0.19	9.76E-01	1.17
OSR Main Ship	Incinerator		125 lb/hr	0.32	8.06E-01	1.12
				0.73	2.86	**3.59**

Emission Factors	Formula	EF	EF	Reference
Hydrogen chloride	HCl	6.40 lb/ton	3.20E-03 lb/lb	EPA WebFIRE, SCC 50100107, Modular Excess Air Combustor, Uncontrolled

Conversion
2000 lb/ton

Submitted to:
ConocoPhillips Alaska, Inc.
Wainwright, Alaska

Submitted by:
AECOM
Fort Collins, Co
60136620-3240
December 2009

Wainwright Near-Term Ambient Air Quality Monitoring Program Fourth Quarter Data Report August through October 2009

Final – Revsion01

Submitted to:
ConocoPhillips Alaska, Inc.
Wainwright, Alaska

Submitted by:
AECOM
Fort Collins, Co
60136620-3240
December 2009

Wainwright Near-Term Ambient Air Quality Monitoring Program Fourth Quarter Data Report August through October 2009

Final – Revsion01

Prepared By
Douglas Bopray, Air Quality Scientist
doug.bopray@aecom.com (970) 530-3463

Reviewed By
Thomas Damiana, Project Manager
thomas.damiana@aecom.com (970) 530-3465

Contents

1.0 Introduction 1-1

2.0 Station Performance Summary 2-1

2.1 Missing, Invalid, and Adjusted Data 2-1

2.2 Data Recovery 2-2

2.3 Data Accuracy 2-2

2.3.1 Precision Checks 2-2

2.3.2 Calibration Checks 2-2

2.3.3 Independent Quality Assurance Audits 2-3

2.4 Data Summary 2-3

3.0 References 3-1

List of Appendices

Appendix A Data Processing Specifications and Statistical Formulae

Appendix B Calibration Report and Documentation

Appendix C Quality Assurance Audit Report

Appendix D Monthly Data Summaries

Appendix E Digital Validated Data

List of Tables

Table 1 Significant Project Events - August through October 2009

Table 2 Data Recovery Results - August through October 2009

Table 3 Systematic Criteria Evaluation Summary August through October 2009

Table 4 Calibration Results – September 11 through 13, 2009

Table 5 Calibration Results – October 1, 2009

Table 6 Independent Quality Assurance Performance Audit Results - September 25, 2009

Table 7 Monthly Measured Gaseous and Particulate Pollutant Concentrations – August through October 2009

Table 7 Summary of Measured Gaseous and Particulate Concentrations – November 2008 through October 2009 – Mass Concentration Units

1.0 Introduction

ConocoPhillips Alaska, Inc. (CPAI) proposes to conduct an offshore exploratory drilling program in the Chukchi Sea near Wainwright, Alaska. It is anticipated that any air quality permit application for the proposed project will require Prevention of Significant Deterioration (PSD) quality pre-construction ambient air quality data. Therefore, CPAI has retained AECOM, Inc., dba AECOM Environment (AECOM) to install and execute an ambient air quality monitoring program located in Wainwright, Alaska. In the near-term, this station will operate from the Wainwright Search and Rescue Headquarters building until a permanent stand-alone station can be established in the late summer of 2009.

The monitoring program has been designed to collect pre-application air quality data suitable to support a PSD major air quality permit application (i.e., PSD quality data). Therefore, the specific monitoring program data quality objectives are to establish a monitoring system to measure, with known bias and precision, the ambient concentrations of the following criteria pollutants to establish compliance with the National Ambient Air Quality Standards (NAAQS) for the monitoring location:

- Oxides of nitrogen (NO_x);
- Sulfur dioxide (SO_2);
- Ozone (O_3);
- Carbon monoxide (CO);
- Particulate matter with an aerodynamic diameter of 10 microns or less (PM_{10}); and
- Particulate matter with an aerodynamic diameter of 2.5 microns or less ($PM_{2.5}$).

A complete description of the monitoring program measurement system, source environment, sampling frequency, quality assurance program, and data management are contained in the Quality Assurance Project Plan (QAPP) (AECOM 2009a). This QAPP was approved by the United States Environmental Protection Agency (USEPA) Region 10 Quality Assurance Department on January 5, 2009.

To aide in interpretation of the air quality data presented in this report, hourly meteorological data is included in Appendix C and with the project digital record included in Appendix D. This data was collected by the National Weather Service Automated Weather Observing System (AWOS) located at the Wainwright Airport (WBAN number 27503), and was obtained from the National Climatic Data Center (NCDC). The data is designated Quality Controlled Local Climatological Data (final) which indicates it has been reviewed and suspect and erroneous values have been flagged or removed. To improve data recovery of this meteorological data set, missing periods of wind and temperature data have been filled in using procedures outlined by USEPA for regulatory dispersion modeling applications (USEPA 1992).

This report provides a summary of monitoring program operational information, and the data collected during the fourth monitoring quarter (August through October 2009). A chronology of project progress and significant events, a summary of network performance, and data retrieval statistics are presented in Chapter 2. Various appendices include results of calibrations and audits conducted during the period and monthly data tables.

2.0 Station Performance Summary

The following subsection provides details pertaining to non-routine data losses, as well as discussions of missing, invalid, and adjusted data. Additional data losses for the monitoring period included those due to routine network operation and maintenance, calibrations, and audits.

Table 1 summarizes significant program events, events affecting station performance, and events affecting data capture rates. Additional discussion of these events, if warranted, is provided in Section 2.1.

2.1 Missing, Invalid, and Adjusted Data

As fully documented in the third quarter report (AECOM 2009b), $PM_{2.5}$ concentrations reported by the analyzer are being adjusted by -3 µg/m^3 from the March 6 replacement of the analyzer until a revised background value can be programmed into the analyzer, which has not yet occurred. This adjustment is warranted based on the site-specific analyzer background value determined in mid-April 2009 in accordance with the analyzer Federal Equivalent Method designation.

Beginning in June, reported SO_2 concentrations for the hours following the automated Level I zero/span and precision checks have been biased high by 0.001 ppm because the measurement system has been slow to settle after being challenged with a concentration orders of magnitude higher than ambient levels. For the first part of September, in the two hours following the automated Level I zero/span and precision checks the bias was 0.001 to 0.002 ppm, respectively. Consequently, the SO_2 concentration for each hour following a span or precision check in September has been adjusted by -0.002 ppm and each hour following that have been adjusted by -0.001 ppm. Following the quarterly calibration on September 11, 2009, only the hour following a span or precision check was affected by the artifact and has been adjusted by -0.001 ppm.

Control of the station temperature remained poor through August with station temperatures above the recommended maximum of 30 °C for gaseous (i.e., not particulate) pollutant analyzers on August 19, 20, 21, 22, 23, 24, 25, 27, 28, and 31. During September and October, control of the station temperature improved and station temperatures were only above the recommended maximum on September 4, 21, 22, and 23; and October 6, 13, 20, 21, 23, 27, and 30. Daily Level I zero/span checks, and routine precision checks indicated normal operation of all analyzers, and that all measurements were being made within acceptable limits even as the station temperature varied. However, at times anomalously low CO measurements appear to be reported during the periods of elevated station temperature that occurred from May through October. Therefore, CO concentration data were invalidated when the station temperature was above 30°C. A similar evaluation of the other gaseous pollutant data found that station temperature outside of the recommended range did not affect pollutant concentrations.

On September 9, 2009, the 24-hour average $PM_{2.5}$ concentration exceeded the corresponding PM_{10} concentration by a factor of three. On that day, the 24-hour average $PM_{2.5}$ concentration was 15 µg/m^3; whereas, the PM_{10} concentration was only 4 µg/m^3. Since $PM_{2.5}$ is a subset of PM_{10}, measured $PM_{2.5}$ concentrations cannot exceed corresponding PM_{10} concentrations; therefore, on September 9, 2009 either the PM_{10} or the $PM_{2.5}$ concentration should be invalidated. On September 9, 2009 winds were predominantly east-northeasterly at an average wind speed of over 8 m/s, and only a trace of precipitation was reported. Based on project data collected to date, these conditions could produce elevated PM_{10} concentrations and did not; therefore, it is difficult to determine which measurement is in error. To help determine which measurement is valid, filter media collected on this day will be analyzed using analytical light microscopy, and if the results are conclusive, the database will be revised.

2.2 Data Recovery

Data recovery percentages for each air quality parameter have been calculated as specified in the QAPP. **Table 2** provides a summary of quarterly data recovery statistics for the monitoring network. With the exceptions described in Section 2.1 and **Table 1**, quarterly losses were caused by routine precision and calibration checks. Data recovery goals for all parameters were exceeded during the quarterly reporting period.

2.3 Data Accuracy

The air quality monitoring systems are subjected to periodic precision and calibration checks, and independent quality assurance performance audits following the schedules and procedures described in the QAPP.

The site technician periodically downloads all data from the station data loggers and sends it to the data analyst for comparison with data that are electronically transferred over phone lines. In accordance the QAPP, at least 5 percent of data from both databases (i.e., data downloaded on-site and data downloaded remotely) from each data logger have been compared on a monthly basis. The results of these comparisons have not identified any differences between data collected on-site and data collected via electronic transfer over phone lines.

2.3.1 Precision Checks

Precision checks of the continuous gaseous pollutant measurement system output (nitrogen dioxide [NO_2], nitric oxide [NO], SO_2, O_3, and CO) have been conducted at least weekly, exceeding the QAPP requirement for bi-weekly checks. A review of precision check results indicate that systematic criteria for data validation are being met at this point in the monitoring program. A summary of these checks is presented in **Table 3** and individual results from each precision check conducted are listed in Appendix A. The results show that: 1) at least one precision check was conducted every two weeks for all gaseous pollutant measurement systems in accordance with the QAPP requirement for bi-weekly checks, and 2) precision goals for all gaseous pollutant measurement systems were exceeded during the quarterly reporting period.

Precision checks of the continuous particulate measurement system (PM_{10} and $PM_{2.5}$) consist of comparison of the daily average flow rates reported by the analyzer internal transfer standard with the nominal flow rate (16.67 LPM), exceeding the QAPP requirement for bi-weekly checks. The percent difference between the daily average flow rate and the nominal flow rate was compared with the data screening critical criteria of ±5 percent of the nominal value. A review of the fourth quarter precision check results indicates that the PM_{10} and $PM_{2.5}$ analyzers are meeting the critical criteria at this point in the monitoring program. A summary of these checks and individual results from each precision check conducted are listed in Appendix A.

2.3.2 Calibration Checks

On September 11 through 13, 2009, the fourth quarter calibration of the air quality monitoring systems was performed. The results are summarized in **Table 4**. As shown in **Table 4**, all calibrated measurement systems were found reporting measurements to within acceptable limits.

In response to the audit results (see Section 2.2.3) an adjustment was made to the CO analyzer on October 1, 2009, to correct a drift in the weekly precision values; therefore, an as-found and as-left calibration check of the measurement system was conducted. The exact times of the calibration checks are provided in **Table 1** and the results are summarized in **Table 5**. As shown in **Table 5**, after the adjustment, the CO measurement system was found to be operating within acceptable limits.

Calibration forms documenting all calibration checks of the air quality measurement systems are included in Appendix B.

2.3.3 Independent Quality Assurance Audits

On September 25, 2009, the fourth quarter independent performance audit of the air quality measurement systems was performed. The results are summarized in **Table 6**. As shown in **Table 6**, with the exception of the CO analyzer, all audited measurement systems were found reporting measurements to within acceptable limits. The auditor found that the CO analyzer zero air response had drifted high, which caused the analyzer's response to the lowest concentration test point (i.e., 4 ppm) to be out of tolerance. The analyzer's response was within tolerance for the remaining two audit test points which ranged from 15 ppm to 44 ppm. A report fully documenting audit results and activities is included in Appendix C.

No data has been invalidated as a result of this audit finding, because the audit results showed that the instrument was operating correctly and simply biasing measurements high due to a documented analyzer zero response drift. This resulted in conservative reported concentrations, and for these reasons, the CO data is valid for the intended purpose (i.e., NAAQS compliance as described in Chapter 1).

2.4 Data Summary

Table 7 provides a summary by month of the gaseous and particulate pollutant concentrations measured during the monitoring period in the units naturally reported by the measurement systems. **Table 7** also summarizes this same data for the current monitoring quarter and for the monitoring program to date. **Table 7** shows that there were no measured exceedences of any ambient air quality standard. A summary of gaseous and particulate concentrations reported in mass units applicable to ambient air quality dispersion modeling (i.e., micrograms per cubic meter ($\mu g/m^3$)) for all data collected at this point in the monitoring program are presented in **Table 8**.

In all cases, data summarized for short-term averaging periods are calculated from hourly values as a period average calculated from non-overlapping blocks starting at midnight standard time each day. It should be noted that the maximum 8-hour O_3 concentration is usually calculated as a running average for comparison with the NAAQS. Monthly tabular summaries of all data collected during the monitoring period are presented in Appendix D. A digital copy of all data collected during the reporting period is included with this document as described in Appendix E.

3.0 References

AECOM Environment (AECOM). 2009a. Wainwright Near-Term Ambient Air Quality Monitoring Quality Assurance Project Plan, Revision 1, Wainwright, Alaska. Prepared for ConocoPhillips Alaska, Inc. January 5, 2009.

_____. 2009b. Wainwright Near-Term Ambient Air Quality Monitoring Program Third Quarter Data Report May through July 2009, Wainwright, Alaska. Prepared for ConocoPhillips, Inc. August 2009.

United States Environmental Protection Agency (USEPA). 1992. Procedures for Substituting Values for Missing NWS Meteorological Data for Use in Regulatory Air Quality Models. Written by Dennis Atkinson and Russell F. Lee. Reference http://www.epa.gov/scram001/surface/missdata.txt July 7,1992.

Tables

Table 1 Significant Project Events - August through October 2009

Date	Time [1]	Parameter	Data Status	Event/Comment
8/13/09	0800	PM_{10}	Invalid	Data is missing for this hour. There are no error codes to indicate the reason. Corresponding $PM_{2.5}$ data is not missing.
8/20/09	0900-1100	NO_x, SO_2, O_3, CO, PM_{10}, and $PM_{2.5}$	Invalid	All air quality data were invalid due to power outages. Note that a precision check was executed on 8/20 during hours ending 1200 and 1300, which resulted in the loss of gaseous pollutant data for those hours following that power failure. $PM_{2.5}$ data are also invalid 8/21 at 1200 and 8/23 from 1300 through 1500 because the analyzer took longer to stabilize following those particular power outages.
8/21/09	0700-1100	NO_x, SO_2, O_3, CO, PM_{10}, and $PM_{2.5}$		
	1200	$PM_{2.5}$		
8/23/09	0800-1200	NO_x, SO_2, O_3, CO, PM_{10}, and $PM_{2.5}$		
	1300-1500	$PM_{2.5}$		
8/24/09	0100	$PM_{2.5}$	Invalid	A high $PM_{2.5}$ concentration (30 µg/m^3) was reported that did not have a corresponding high PM_{10} concentration (6 µg/m^3); suspect that lint which built up on the analyzer nozzle, came loose and was subsequently sampled as accumulated particulate mass.
9/11/09	1200-1700	NO_x, SO_2, O_3, and CO	Invalid	Quarterly calibration of the air quality measurement systems. All air quality measurement systems were found and left reporting measurements to within acceptable limits.
9/12/09	1600-1800	PM_{10}		
9/13/09	0800-0900	$PM_{2.5}$		
9/25/09	1800-2000	NO_x, SO_2, O_3, and CO	Invalid	Independent quality assurance performance audit of the air quality measurement systems. All air quality measurements systems, with the exception of CO, were found to be reporting measurements to within acceptable limits. See Section 2.3.3 for additional details.
	1900-2000	PM_{10}		
	2000-2100	$PM_{2.5}$		
10/1/09	0900-1300	NO_x, SO_2, O_3, and CO	Invalid	A multi-point calibration check and zero adjustment to the CO analyzer were performed by the site technician.
10/28/09	0900-1000	NO_x, SO_2, O_3, CO, PM_{10}, and $PM_{2.5}$	Invalid	All air quality data were invalid due to power outages.
10/29/09	1000	$PM_{2.5}$	Invalid	Data is missing for this hour. There are no error codes to indicate the reason. Corresponding PM_{10} data is not missing.

[1] All times are Alaska Standard Time and refer to the hour ending a 1 hour block.

Table 2 Data Recovery Results - August through October 2009

Parameter	August 2009 (%)	September 2009 (%)	October 2009 (%)	Fourth Quarter 2009 (%)	Data Capture Rate Goal [1] (%)
NO_2	96.9	97.8	97.6	97.4	80
SO_2	96.9	97.8	97.6	97.4	
O_3	96.9	97.8	97.6	97.4	
CO	84.9	95.8	93.0	91.2	
PM_{10}	100	100	100	100	
$PM_{2.5}$	96.8	100	100	98.9	

[1] Assessed on a quarterly basis. Data recovery is based on valid hourly measurements with the exception of particulate data which is based on valid 24-hour measurements.

Table 3 Systematic Criteria Evaluation Summary August through October 2009

Precision Data	Analyzer					Precision Goal
	NO	NO_2	SO_2	CO	O_3	
Number of Precision Checks (N)	27	27	27	27	27	N.A.
Coefficient of Variation (CV)	2.5	3.6	2.5	2.3	4.5	±10/±7 [1]
Bias Estimate (BA) [2]	- 4.4	+/- 3.3	- 3.2	- 4.1	+/- 3.6	±10/±7 [1]
Lower 95% Probability Limit (L95)	-7.7	-4.1	-6.4	-7.1	-7.1	N.A.
Upper 95% Probability Limit (U95)	0.2	7.3	1.4	0.2	7.4	N.A.

[1] The project goal for O_3 is ±7 for CV and BA and ±10 for CV and BA for all other analyzers. CV and BA are evaluated on an annual basis for comparison to project goals; therefore, measurement system results presented represent a status update and are not used to assess data validity at this point.

[2] Unsigned BA values are denoted with "+/-"

Table 4 Calibration Results – September 11 through 13, 2009

Parameter	Calibration Check Results (Pass/Fail)		Comments
	Initial	Final	
Air Quality			
SO_2	Pass	N.A.	The calibration check confirmed all air quality systems were reporting measurements to within acceptable limits.
NO_x	Pass	N.A.	
NO_2	Pass	N.A.	
NO	Pass	N.A.	
CO	Pass	N.A.	
O_3	Pass	N.A.	
PM_{10}	Pass	N.A.	
$PM_{2.5}$	Pass	N.A.	

Table 5 Calibration Results – October 1, 2009

Parameter	Calibration Check Results (Pass/Fail)		Comments
	Initial	Final	
Air Quality			
SO_2	N.A.	N.A.	Following the adjustment, the calibration check confirmed the CO measurement system was reporting measurements to within acceptable limits. See Section 2.3.2 for a discussion of the CO measurement system adjustment. Calibration checks of all other measurement systems were not required or conducted.
NO_x	N.A.	N.A.	
NO_2	N.A.	N.A.	
NO	N.A.	N.A.	
CO	Fail	Pass	
O_3	N.A.	N.A.	
PM_{10}	N.A.	N.A.	
$PM_{2.5}$	N.A.	N.A.	

Table 6 Independent Quality Assurance Performance Audit Results - September 25, 2009

Parameter	Audit Results (Pass/Fail)	Comments
Air Quality		
SO_2	Pass	The audit confirmed all air quality systems except CO were reporting measurements to within acceptable limits. See Section 2.3.3 for a discussion of the CO measurement system audit results.
NO_x	Pass	
NO_2	Pass	
NO	Pass	
CO	Fail	
O_3	Pass	
PM_{10}	Pass	
$PM_{2.5}$	Pass	

Table 7 Monthly Measured Gaseous and Particulate Pollutant Concentrations – August through October 2009

Monitoring Period	Measured Concentration (ppm)							Measured Concentration [1] (µg/m^3)		
	Period Average NO_2	Maximum 3-hour SO_2 [2]	Maximum 24-hour SO_2 [2]	Period Average SO_2	Maximum 8-hour O_3 [2, 3]	Maximum 1-hour CO	Maximum 8-hour CO [2]	Maximum 24-hour PM_{10} [2]	Maximum 24-hour $PM_{2.5}$ [2]	Period Average $PM_{2.5}$
Monthly Reporting Data										
August-09	0.001	0.001	0.000	0.000	0.028	0.839	0.826	64	9	3
September-09	0.001	0.003	0.001	0.000	0.033	0.628	0.201	51	15	3
October-09	0.000	0.002	0.001	0.000	0.034	0.487	0.326	69	23	2
Quarterly Reporting Data										
Aug-Oct 2009	0.000	0.003	0.001	0.000	0.034	0.839	0.826	69	23	3
Monitoring Year to Date										
Nov 2008 – Oct 2009	0.001	0.007	0.004	0.000	0.048	0.918	0.826	114	23	2
NAAQS	0.053 [4]	0.5 [5]	0.14 [5]	0.03 [4]	0.075 [6]	35 [5]	9 [5]	150 [7]	35 [8]	15 [9]

1 For gaseous pollutants, reported to USEPA designated standard conditions using a pressure of 1 Atm. and a temperature of 25°C. PM_{10} and $PM_{2.5}$ values are reported to actual conditions.

2 Period average calculated from non-overlapping blocks starting at midnight standard time each day.

3 Calculated as a block average; however, this average should be calculated as a running average when comparing to the NAAQS.

4 Compliance is assessed by comparison to the annual average of measured concentrations.

5 Not to be exceeded more than once per year. Compliance is assessed by comparison to the measured second-highest daily maximum.

6 Compliance is assessed by comparison to the 3-year average of the measured fourth-highest daily maximum 8-hour average.

7 Reported to USEPA designated standard conditions using a pressure of 1 Atm. and a temperature of 25°C. Not to be exceeded more than once per year on average over 3 years.

8 Compliance is based on the 3-year average of the 98th percentile of 24-hour concentrations reported to actual conditions.

9 Compliance is assessed by comparison to the 3-year average of the weighted measured annual mean $PM_{2.5}$ concentration reported to actual conditions.

Table 8 Summary of Measured Gaseous and Particulate Concentrations – November 2008 through October 2009 – Mass Concentration Units

Monitoring Period	Measured Concentration[1] ($\mu g/m^3$)							Measured Concentration [1] ($\mu g/m^3$)		
	Period Average NO_2	Maximum 3-hour SO_2 [2]	Maximum 24-hour SO_2 [2]	Period Average SO_2	Maximum 8-hour O_3 [2, 3]	Maximum 1-hour CO	Maximum 8-hour CO [2]	Max. 24-hour PM_{10} [2]	Max. 24-hour $PM_{2.5}$ [2]	Period Average $PM_{2.5}$
Quarterly Reporting Data										
Nov 2008 – Jan 2009	2	17	10	0.7	82	897	367	10	9	1
Feb-Apr 2009	2	9	3	0.6	93	1,050	535	6	6	2
May-Jul 2009	1	4	2	0.1	84	516	498	114	14	4
Aug-Oct 2009	1	8	2	0.2	66	960	945	69	23	3
Monitoring Year to Date										
Nov 2008 - Oct 2009	2	17	10	0.4	93	1,050	945	114	23	2
NAAQS	100 [4]	1,300 [5]	365 [5]	80 [4]	147 [6]	40,000 [5]	10,000 [5]	150 [7]	35 [8]	15 [9]

1 For gaseous pollutants, reported to USEPA designated standard conditions using a pressure of 1 Atm. and a temperature of 25°C. PM_{10} and $PM_{2.5}$ values are reported to actual conditions.

2 Period average calculated from non-overlapping blocks starting at midnight standard time each day.

3 Calculated as a block average; however, this average should be calculated as a running average when comparing to the NAAQS.

4 Compliance is assessed by comparison to the annual average of measured concentrations.

5 Not to be exceeded more than once per year. Compliance is assessed by comparison to the measured second-highest daily maximum.

6 Compliance is assessed by comparison to the 3-year average of the measured fourth-highest daily maximum 8-hour average.

7 Reported to USEPA designated standard conditions using a pressure of 1 Atm. and a temperature of 25°C. Not to be exceeded more than once per year on average over 3 years.

8 Compliance is based on the 3-year average of the 98th percentile of 24-hour concentrations reported to actual conditions.

9 Compliance is assessed by comparison to the 3-year average of the weighted measured annual mean $PM_{2.5}$ concentration reported to actual conditions.

Appendix A

Data Processing Specifications and Statistical Formulae

Data recovery percentage

Continuous air quality and meteorological data, and continuous PM data

Based on the method used by air quality dispersion models, data processing has been conducted assuming that a minimum of 75 percent of valid hourly average data must be collected to calculate a 24-hour average. As a result, if 18 or more hours of air quality data are valid in a 24-hour period, a 24-hour average will be calculated. The 24-hour average concentration is calculated based on the actual number of valid hours in the 24-hour period, and is calculated on a midnight-to-midnight (Standard Time) basis.

The data recovery percentage P_t for each continuous parameter is determined by:

$$P_t = \frac{h_v}{h_t} \times 100$$

where:

h_v = number of hours of valid data, and
h_t = total hours in the period.

Methods of calculating precision and accuracy

The precision estimator is the coefficient of variation upper bound and is calculated from the following equation:

$$CV = \sqrt{\frac{n\left[\sum_{i=1}^{n} d_i^2 - \left(\sum_{i=1}^{n} d_i\right)^2\right]}{n(n-1)}} \times \sqrt{\frac{n-1}{\chi^2_{0.1,n-1}}}$$

Where:

n is the number of precision checks on the instrument made during the period,
d_i is calculated as above for each precision check, and
$X^2_{0.1,n-1}$ is the chi-squared distribution with n-1 degrees of freedom.

Bias

The bias estimator is an upper bound on the mean absolute value of the percent differences calculated from the precision checks by:

$$|AB| = AB + t_{0.95,n-1} \times \frac{AS}{\sqrt{n}}$$

Where n is the number of single point checks being aggregated; $t_{0.95,n-1}$ is the 95th percentile of the t-distribution with n-1 degrees of freedom; and the quantity AB is the mean of the absolute values of the d_i's and is calculated using:

$$AB = \frac{1}{n}\sum_{i=1}^{n} |d_i|$$

And AS is the standard deviation of the absolute value of the d_i's and is calculated using:

$$AS = \sqrt{\frac{n\sum_{i=1}^{n}|d_i|^2 - \left(\sum_{i=1}^{n}|d_i|\right)^2}{n(n-1)}}$$

Calculate the 25th and 75th percentiles of the percent differences of the precision checks. If both percentiles are positive than the absolute bias upper bound should be given a positive sign, if both are negative than assign a negative sign, if they are mixed the bias does not have a sign.

Validation of Bias

The results of the precision checks can be compared using the upper and lower probability limits. Calculate the upper and lower probability limits for the population of precision checks.

Upper Probability Limit=m+1.96*S

Lower Probability Limit=m-1.96*S

$$m = \frac{1}{k}\sum_{i=1}^{k} d_i$$

Where:
m is the mean,
k is the total number of precision checks for the time period being evaluated, and
S is the standard deviation of the percent differences

Quarterly precision statistics are provided in Tables A-1 through A-5.

Data Bias Correction Using Calibration Information

Continuous air quality data may be corrected for both instrument zero and span drift using periodic zero and span calibration data (obtained from Level I zero/span values and/or multipoint calibration data), using the following procedure developed from the Linear Interpolation method for data reduction discussed in Section 12.8 of the Quality Assurance Handbook for Air Pollution Measurement Systems Volume II: Part 1 (USEPA 1998) (Red Book). To correct hourly concentration measurements, the trend of the instrument zero and span drift over approximately one month is used to adjust the instrument calibration curve on a daily basis. The adjusted calibration curve is then used to reassess the actual hourly measurements, preventing instrument bias from potentially skewing results. As outlined in the Red Book this procedure requires that:

- The zero/span data accurately represent the true zero and span response of the analyzer.
- The instrument has a linear calibration curve.
- The instrument drift during the period is no larger than design values.

To account for changes to the calibration curve, concentration measurements will be corrected according to the following equation:

$$C_{corr} = (C - C_0)\left[\frac{C_{ma}}{C_m - C_0}\right]$$

where:

C_{corr} = Corrected hourly concentration measurement at time t_o
C = Uncorrected hourly concentration measurement at time t_o
C_{ma} = Expected instrument span at time t_o
C_m = Actual instrument span at time t_o
C_o = Actual instrument zero bias at time t_o

Calibration parameters (C_{ma}, C_m, *and* C_o) are not available hourly (at time t_o) as required by this method. To obtain these parameters for any hour required, they are interpolated from a linear relation between calibration parameter and time. This relation is developed using all calibration information between time limits described below, and containing the hour being corrected. Ideally, nightly Level I zero/span data for a full calendar month are used to develop the linear relation unless:

- Instrument adjustment is made during the month, in which case separate linear relations are developed representing pre- and post-adjustment instrument operation.
- Nightly Level I (zero/span data are not available, in which case the linear relations are based on all calibration information available between instrument adjustments.

Negative Air Quality Concentration Data Correction

After all continuous air quality data have been corrected for instrument zero and span drift, any remaining negative hourly concentrations will be set to zero as follows:

- Concentrations between 0.000 and the negative instrumentation minimum detection limit will be to zero.
- Concentrations less than the negative instrumentation limit will be investigated for correctness before setting to zero.

Though small negative concentrations are simply a reflection of instrumentation detection uncertainty, it is desirable to remove them from the database. This procedure removes negative concentrations from the database, leaving it slightly more conservative (biased higher) than the original.

Table A-1 Nitric Oxide (NO) Precision Statistics

Date	Analyzer Response (ppm)	Gas Flow (cc/min)	Cylinder Conc. (ppm)	Dilution Flow (cc/min)	Input Conc. (ppm)	Percent Difference (d_i)	Type of Precision Check
8 3	0.088	13.80	41.0	6046	0.093	-5.1	Automatic
8 3	0.089	13.80	41.0	6051	0.093	-4.0	Automatic
8 6	0.093	13.80	41.0	6036	0.093	-0.4	Automatic
8 10	0.091	13.80	41.0	6044	0.093	-2.3	Automatic
8 13	0.090	13.80	41.0	6040	0.093	-3.1	Automatic
8 17	0.088	13.80	41.0	6053	0.093	-4.9	Automatic
8 20	0.092	13.80	41.0	6049	0.093	-1.3	Automatic
8 24	0.090	13.80	41.0	6060	0.093	-3.2	Automatic
8 31	0.091	13.80	41.0	6059	0.093	-2.5	Automatic
9 7	0.089	13.80	41.0	6049	0.093	-4.3	Automatic
9 10	0.090	13.80	41.0	6063	0.093	-3.5	Automatic
9 11	0.091	13.40	41.0	5872	0.094	-3.5	Automatic
9 18	0.091	13.50	41.0	5872	0.094	-3.0	Automatic
9 21	0.089	13.40	41.0	5873	0.094	-5.5	Automatic
9 24	0.087	13.40	41.0	5884	0.093	-6.9	Automatic
9 25	0.089	13.40	41.0	5875	0.094	-5.8	Automatic
9 28	0.091	13.40	41.0	5884	0.093	-1.8	Automatic
10 1	0.090	13.50	41.0	5857	0.094	-4.3	Automatic
10 2	0.092	13.50	41.0	5870	0.094	-2.1	Automatic
10 5	0.091	13.40	41.0	5864	0.094	-3.2	Automatic
10 9	0.087	13.40	41.0	5878	0.094	-7.4	Automatic
10 13	0.093	13.40	41.0	5884	0.093	0.0	Automatic
10 16	0.091	13.40	41.0	5851	0.094	-3.2	Automatic
10 20	0.093	13.40	41.0	5880	0.094	-1.1	Automatic
10 23	0.086	13.40	41.0	5885	0.093	-7.5	Automatic
10 26	0.089	13.40	41.0	5884	0.093	-4.3	Automatic
10 30	0.088	13.40	41.0	5882	0.094	-6.4	Automatic

Aug - Oct 2009 Precision Statistics (NO)

Number of Precision Checks (N) =	27
Coefficient of variation (CV) =	2.5
Bias (BA) =	- 4.39
Upper 95% Probability Limit =	-7.7
Lower 95% Probability Limit =	0.2

Table A-2 Nitrogen Dioxide (NO_2) Precision Statistics

Date	NO_{orig} Span (ppm)	NO_{rem} GPT (ppm)	NO_2 Corrected (ppm)	NO_2 Response (ppm)	NOx_{orig} Span (ppm)	NOx_{rem} GPT (ppm)	NOx_{orig} Corrected (ppm)	NOx_{rem} Corrected (ppm)	NO_2 Percent Difference	Converter Efficiency (percent)	Type of Precision Check
8 3	0.452	0.363	0.091	0.091	0.452	0.453	0.462	0.463	-0.2	101.1	Automatic
8 3	0.453	0.361	0.094	0.092	0.453	0.452	0.462	0.461	-2.2	98.9	Automatic
8 6	0.463	0.371	0.092	0.092	0.463	0.462	0.464	0.463	-0.4	98.9	Automatic
8 10	0.457	0.367	0.091	0.092	0.456	0.459	0.462	0.465	0.9	103.3	Automatic
8 13	0.454	0.363	0.093	0.092	0.454	0.454	0.462	0.462	-0.9	100.0	Automatic
8 17	0.449	0.362	0.090	0.091	0.449	0.452	0.464	0.467	1.0	103.4	Automatic
8 20	0.455	0.365	0.092	0.090	0.454	0.454	0.462	0.462	-1.7	100.0	Automatic
8 24	0.448	0.359	0.092	0.089	0.447	0.447	0.464	0.464	-3.7	100.0	Automatic
8 31	0.451	0.362	0.092	0.091	0.450	0.452	0.464	0.466	-0.8	102.3	Automatic
9 7	0.447	0.358	0.092	0.090	0.447	0.447	0.463	0.463	-2.6	100.0	Automatic
9 10	0.454	0.362	0.094	0.092	0.451	0.453	0.464	0.466	-2.4	102.2	Automatic
9 11	0.454	0.364	0.089	0.092	0.452	0.456	0.448	0.452	3.4	104.5	Automatic
9 18	0.459	0.370	0.087	0.093	0.459	0.462	0.450	0.453	6.4	103.4	Automatic
9 21	0.445	0.355	0.091	0.092	0.447	0.446	0.450	0.449	0.9	98.9	Automatic
9 24	0.446	0.356	0.091	0.093	0.446	0.448	0.449	0.451	2.4	102.2	Automatic
9 25	0.453	0.363	0.089	0.091	0.452	0.454	0.448	0.450	2.0	102.2	Automatic
9 28	0.461	0.367	0.092	0.095	0.460	0.461	0.450	0.451	3.3	101.1	Automatic
10 1	0.464	0.368	0.093	0.095	0.464	0.462	0.450	0.448	1.8	97.9	Automatic
10 2	0.464	0.370	0.091	0.097	0.465	0.466	0.450	0.451	6.2	101.1	Automatic
10 5	0.462	0.368	0.092	0.096	0.461	0.463	0.449	0.451	4.9	102.1	Automatic
10 9	0.452	0.360	0.092	0.095	0.453	0.454	0.449	0.450	3.7	101.1	Automatic
10 13	0.467	0.374	0.090	0.093	0.467	0.467	0.450	0.450	3.6	100.0	Automatic
10 16	0.466	0.369	0.094	0.096	0.466	0.464	0.449	0.447	2.5	97.9	Automatic
10 20	0.472	0.374	0.093	0.100	0.471	0.473	0.448	0.450	7.3	102.0	Automatic
10 23	0.447	0.356	0.092	0.092	0.446	0.447	0.449	0.450	0.4	101.1	Automatic
10 26	0.462	0.367	0.092	0.097	0.463	0.464	0.448	0.449	5.1	101.1	Automatic
10 30	0.457	0.361	0.095	0.097	0.456	0.457	0.450	0.451	2.4	101.0	Automatic

Aug - Oct 2009 Precision Statistics (NO_2)

Number of Precision Checks (N) =	27
Coefficient of variation =	3.6
Bias =	+/- 3.33
Lower 95% Probability Limit =	-4.1
Upper 95% Probability Limit =	7.3

Table A-3 Sulfur Dioxide (SO_2) Precision Statistics

Date	Analyzer Response (ppm)	Gas Flow (cc/min)	Cylinder Conc. (ppm)	Dilution Flow (cc/min)	Input Conc. (ppm)	Percent Difference (d_i)	Type of Precision Check
8 3	0.091	13.80	41.1	6046	0.093	-2.1	Automatic
8 3	0.092	13.80	41.1	6051	0.093	-1.1	Automatic
8 6	0.092	13.80	41.1	6036	0.094	-2.1	Automatic
8 10	0.091	13.80	41.1	6044	0.093	-2.0	Automatic
8 13	0.091	13.80	41.1	6040	0.093	-2.0	Automatic
8 17	0.091	13.80	41.1	6053	0.093	-2.0	Automatic
8 20	0.092	13.80	41.1	6049	0.093	-0.8	Automatic
8 24	0.093	13.80	41.1	6060	0.093	0.3	Automatic
8 31	0.092	13.80	41.1	6059	0.093	-0.7	Automatic
9 7	0.091	13.80	41.1	6049	0.093	-1.9	Automatic
9 10	0.092	13.80	41.1	6063	0.093	-0.8	Automatic
9 11	0.091	13.40	41.1	5872	0.094	-3.0	Automatic
9 18	0.093	13.50	41.1	5872	0.094	-0.9	Automatic
9 21	0.094	13.40	41.1	5873	0.094	0.2	Automatic
9 24	0.094	13.40	41.1	5884	0.094	0.3	Automatic
9 25	0.090	13.40	41.1	5875	0.094	-4.0	Automatic
9 28	0.094	13.40	41.1	5884	0.094	0.4	Automatic
10 1	0.088	13.50	41.1	5857	0.094	-6.2	Automatic
10 2	0.090	13.50	41.1	5870	0.094	-4.2	Automatic
10 5	0.091	13.40	41.1	5864	0.094	-3.2	Automatic
10 9	0.090	13.40	41.1	5878	0.094	-4.3	Automatic
10 13	0.088	13.40	41.1	5884	0.094	-6.4	Automatic
10 16	0.091	13.40	41.1	5851	0.094	-3.3	Automatic
10 20	0.089	13.40	41.1	5880	0.094	-5.5	Automatic
10 23	0.089	13.40	41.1	5885	0.093	-4.5	Automatic
10 26	0.091	13.40	41.1	5884	0.094	-3.5	Automatic
10 30	0.090	13.40	41.1	5882	0.094	-4.6	Automatic

Aug - Oct 2009 Precision Statistics (SO_2)

Number of Precision Checks (N) =	27
Coefficient of variation =	2.5
Bias =	- 3.22
Lower 95% Probability Limit =	-6.4
Upper 95% Probability Limit =	1.4

Table A-4 Carbon Monoxide (CO) Precision Statistics

Date	Analyzer Response (ppm)	Gas Flow (cc/min)	Cylinder Conc. (ppm)	Dilution Flow (cc/min)	Input Conc. (ppm)	Percent Difference (d_i)	Type of Precision Check
8 3	7.368	13.80	3352.0	6046	7.610	-3.2	Automatic
8 3	7.418	13.80	3352.0	6051	7.610	-2.5	Automatic
8 6	7.403	13.80	3352.0	6036	7.630	-3.0	Automatic
8 10	7.490	13.80	3352.0	6044	7.620	-1.7	Automatic
8 13	7.475	13.80	3352.0	6040	7.630	-2.0	Automatic
8 17	7.525	13.80	3352.0	6053	7.600	-1.0	Automatic
8 20	7.368	13.80	3352.0	6049	7.600	-3.1	Automatic
8 24	7.433	13.80	3352.0	6060	7.600	-2.2	Automatic
8 31	7.373	13.80	3352.0	6059	7.590	-2.9	Automatic
9 7	7.363	13.80	3352.0	6049	7.610	-3.2	Automatic
9 10	7.413	13.80	3352.0	6063	7.590	-2.3	Automatic
9 11	7.785	13.40	3352.0	5872	7.660	1.6	Automatic
9 18	7.182	13.50	3352.0	5872	7.670	-6.4	Automatic
9 21	7.452	13.40	3352.0	5873	7.650	-2.6	Automatic
9 24	7.248	13.40	3352.0	5884	7.630	-5.0	Automatic
9 25	7.244	13.40	3352.0	5875	7.650	-5.3	Automatic
9 28	7.185	13.40	3352.0	5884	7.630	-5.8	Automatic
10 1	7.168	13.50	3352.0	5857	7.680	-6.7	Automatic
10 2	7.288	13.50	3352.0	5870	7.680	-5.1	Automatic
10 5	7.226	13.40	3352.0	5864	7.670	-5.8	Automatic
10 9	7.255	13.40	3352.0	5878	7.640	-5.0	Automatic
10 13	7.449	13.40	3352.0	5884	7.630	-2.4	Automatic
10 16	7.284	13.40	3352.0	5851	7.690	-5.3	Automatic
10 20	7.484	13.40	3352.0	5880	7.650	-2.2	Automatic
10 23	7.381	13.40	3352.0	5885	7.620	-3.1	Automatic
10 26	7.429	13.40	3352.0	5884	7.640	-2.8	Automatic
10 30	7.325	13.40	3352.0	5882	7.650	-4.2	Automatic

Aug - Oct 2009 Precision Statistics (CO)

Number of Precision Checks (N) =	27
Coefficient of variation =	2.3
Bias =	- 4.1
Lower 95% Probability Limit =	-7.1
Upper 95% Probability Limit =	0.2

Table A-5 Ozone (O_3) Precision Statistics

Date	Analyzer Response (ppm)	Input Conc. (ppm)	Percent Difference (d_i)	Type of Precision Check
8 3	0.090	0.091	-0.9	Automatic
8 3	0.089	0.091	-2.0	Automatic
8 6	0.090	0.090	0.3	Automatic
8 10	0.089	0.090	-0.8	Automatic
8 13	0.089	0.091	-1.9	Automatic
8 17	0.086	0.085	1.6	Automatic
8 20	0.089	0.091	-1.8	Automatic
8 24	0.087	0.092	-5.0	Automatic
8 31	0.086	0.095	-9.0	Automatic
9 7	0.088	0.089	-1.5	Automatic
9 10	0.089	0.084	5.6	Automatic
9 11	0.087	0.088	-1.4	Automatic
9 18	0.090	0.085	5.7	Automatic
9 21	0.090	0.090	-0.1	Automatic
9 24	0.090	0.084	7.1	Automatic
9 25	0.092	0.093	-1.1	Automatic
9 28	0.091	0.091	0.1	Automatic
10 1	0.092	0.096	-4.4	Automatic
10 2	0.091	0.091	-0.2	Automatic
10 5	0.092	0.096	-4.3	Automatic
10 9	0.089	0.088	1.2	Automatic
10 13	0.090	0.090	0.2	Automatic
10 16	0.092	0.089	3.7	Automatic
10 20	0.092	0.089	3.9	Automatic
10 23	0.087	0.082	5.5	Automatic
10 26	0.089	0.085	4.3	Automatic
10 30	0.089	0.090	-1.4	Automatic

Aug - Oct 2009 Precision Statistics (O_3)

Number of Precision Checks (N) =	27
Coefficient of variation =	4.5
Bias =	+/- 3.56
Lower 95% Probability Limit =	-7.1
Upper 95% Probability Limit =	7.4

Table A-6 PM_{10} Precision Statistics

Date			Average Daily Flow (lpm)		Percent Difference (%)
Year	Month	Day	Nominal	Indicated	
2009	8	1	16.7	16.7	0.0
2009	8	2	16.7	16.7	0.0
2009	8	3	16.7	16.7	0.0
2009	8	4	16.7	16.7	0.0
2009	8	5	16.7	16.7	0.0
2009	8	6	16.7	16.7	0.0
2009	8	7	16.7	16.7	0.0
2009	8	8	16.7	16.7	0.0
2009	8	9	16.7	16.7	0.0
2009	8	10	16.7	16.7	0.0
2009	8	11	16.7	16.7	0.0
2009	8	12	16.7	16.7	0.0
2009	8	13	16.7	16.7	0.0
2009	8	14	16.7	16.7	0.0
2009	8	15	16.7	16.7	0.0
2009	8	16	16.7	16.7	0.0
2009	8	17	16.7	16.7	0.0
2009	8	18	16.7	16.7	0.0
2009	8	19	16.7	16.7	0.0
2009	8	20	16.7	16.7	0.0
2009	8	21	16.7	16.7	0.0
2009	8	22	16.7	16.7	0.0
2009	8	23	16.7	16.7	0.0
2009	8	24	16.7	16.7	0.0
2009	8	25	16.7	16.7	0.0
2009	8	26	16.7	16.7	0.0
2009	8	27	16.7	16.7	0.0
2009	8	28	16.7	16.7	0.0
2009	8	29	16.7	16.7	0.0
2009	8	30	16.7	16.7	0.0
2009	8	31	16.7	16.7	0.0

Table A-6 PM_{10} Precision Statistics (continued)

Date			Average Daily Flow (lpm)		Percent Difference (%)
Year	Month	Day	Nominal	Indicated	
2009	9	1	16.7	16.7	0.0
2009	9	2	16.7	16.7	0.0
2009	9	3	16.7	16.7	0.0
2009	9	4	16.7	16.7	0.0
2009	9	5	16.7	16.7	0.0
2009	9	6	16.7	16.7	0.0
2009	9	7	16.7	16.7	0.0
2009	9	8	16.7	16.7	0.0
2009	9	9	16.7	16.7	0.0
2009	9	10	16.7	16.7	0.0
2009	9	11	16.7	16.7	0.0
2009	9	12	16.7	16.7	0.0
2009	9	13	16.7	16.7	0.0
2009	9	14	16.7	16.7	0.0
2009	9	15	16.7	16.7	0.0
2009	9	16	16.7	16.7	0.0
2009	9	17	16.7	16.7	0.0
2009	9	18	16.7	16.7	0.0
2009	9	19	16.7	16.7	0.0
2009	9	20	16.7	16.7	0.0
2009	9	21	16.7	16.7	0.0
2009	9	22	16.7	16.7	0.0
2009	9	23	16.7	16.7	0.0
2009	9	24	16.7	16.7	0.0
2009	9	25	16.7	16.7	0.0
2009	9	26	16.7	16.7	0.0
2009	9	27	16.7	16.7	0.0
2009	9	28	16.7	16.7	0.0
2009	9	29	16.7	16.7	0.0
2009	9	30	16.7	16.7	0.0

Table A-6 PM_{10} Precision Statistics (continued)

Date			Average Daily Flow (lpm)		Percent Difference (%)
Year	Month	Day	Nominal	Indicated	
2009	10	1	16.7	16.7	0.0
2009	10	2	16.7	16.7	0.0
2009	10	3	16.7	16.7	0.0
2009	10	4	16.7	16.7	0.0
2009	10	5	16.7	16.7	0.0
2009	10	6	16.7	16.7	0.0
2009	10	7	16.7	16.7	0.0
2009	10	8	16.7	16.7	0.0
2009	10	9	16.7	16.7	0.0
2009	10	10	16.7	16.7	0.0
2009	10	11	16.7	16.7	0.0
2009	10	12	16.7	16.7	0.0
2009	10	13	16.7	16.7	0.0
2009	10	14	16.7	16.7	0.0
2009	10	15	16.7	16.7	0.0
2009	10	16	16.7	16.7	0.0
2009	10	17	16.7	16.7	0.0
2009	10	18	16.7	16.7	0.0
2009	10	19	16.7	16.7	0.0
2009	10	20	16.7	16.7	0.0
2009	10	21	16.7	16.7	0.0
2009	10	22	16.7	16.7	0.0
2009	10	23	16.7	16.7	0.0
2009	10	24	16.7	16.7	0.0
2009	10	25	16.7	16.7	0.0
2009	10	26	16.7	16.7	0.0
2009	10	27	16.7	16.7	0.0
2009	10	28	16.7	16.7	0.0
2009	10	29	16.7	16.7	0.0
2009	10	30	16.7	16.7	0.0
2009	10	31	16.7	16.7	0.0

August - October 2009 Precision Statistics (PM_{10})

Number of Precision Checks (N) =	92
Average Percent Difference (%) =	0.0
Maximum Daily Percent Difference (%) =	0.0

Table A-7 $PM_{2.5}$ Precision Statistics

Date			Average Daily Flow (lpm)		Percent Difference (%)
Year	Month	Day	Nominal	Indicated	
2009	8	1	16.7	16.7	0.0
2009	8	2	16.7	16.7	0.0
2009	8	3	16.7	16.7	0.0
2009	8	4	16.7	16.7	0.0
2009	8	5	16.7	16.7	0.0
2009	8	6	16.7	16.7	0.0
2009	8	7	16.7	16.7	0.0
2009	8	8	16.7	16.7	0.0
2009	8	9	16.7	16.7	0.0
2009	8	10	16.7	16.7	0.0
2009	8	11	16.7	16.7	0.0
2009	8	12	16.7	16.7	0.0
2009	8	13	16.7	16.7	0.0
2009	8	14	16.7	16.7	0.0
2009	8	15	16.7	16.7	0.0
2009	8	16	16.7	16.7	0.0
2009	8	17	16.7	16.7	0.0
2009	8	18	16.7	16.7	0.0
2009	8	19	16.7	16.7	0.0
2009	8	20	16.7	16.7	0.0
2009	8	21	16.7	16.7	0.0
2009	8	22	16.7	16.7	0.0
2009	8	23	16.7	Invalid	NA
2009	8	24	16.7	16.7	0.0
2009	8	25	16.7	16.7	0.0
2009	8	26	16.7	16.7	0.0
2009	8	27	16.7	16.7	0.0
2009	8	28	16.7	16.7	0.0
2009	8	29	16.7	16.7	0.0
2009	8	30	16.7	16.7	0.0
2009	8	31	16.7	16.7	0.0

Table A-7 $PM_{2.5}$ Precision Statistics (continued)

Date			Average Daily Flow (lpm)		Percent Difference (%)
Year	Month	Day	Nominal	Indicated	
2009	9	1	16.7	Invalid	N.A.
2009	9	2	16.7	16.7	0.0
2009	9	3	16.7	16.7	0.0
2009	9	4	16.7	16.7	0.0
2009	9	5	16.7	16.7	0.0
2009	9	6	16.7	16.7	0.0
2009	9	7	16.7	16.7	0.0
2009	9	8	16.7	16.7	0.0
2009	9	9	16.7	16.7	0.0
2009	9	10	16.7	16.7	0.0
2009	9	11	16.7	16.7	0.0
2009	9	12	16.7	16.7	0.0
2009	9	13	16.7	16.7	0.0
2009	9	14	16.7	16.7	0.0
2009	9	15	16.7	16.7	0.0
2009	9	16	16.7	16.7	0.0
2009	9	17	16.7	16.7	0.0
2009	9	18	16.7	16.7	0.0
2009	9	19	16.7	16.7	0.0
2009	9	20	16.7	16.7	0.0
2009	9	21	16.7	16.7	0.0
2009	9	22	16.7	16.7	0.0
2009	9	23	16.7	16.7	0.0
2009	9	24	16.7	16.7	0.0
2009	9	25	16.7	16.7	0.0
2009	9	26	16.7	16.7	0.0
2009	9	27	16.7	16.7	0.0
2009	9	28	16.7	16.7	0.0
2009	9	29	16.7	16.7	0.0
2009	9	30	16.7	16.7	0.0

Table A-7 $PM_{2.5}$ Precision Statistics (continued)

Date			Average Daily Flow (lpm)		Percent Difference (%)
Year	Month	Day	Nominal	Indicated	
2009	10	1	16.7	16.7	0.0
2009	10	2	16.7	16.7	0.0
2009	10	3	16.7	16.7	0.0
2009	10	4	16.7	16.7	0.0
2009	10	5	16.7	16.7	0.0
2009	10	6	16.7	16.7	0.0
2009	10	7	16.7	16.7	0.0
2009	10	8	16.7	16.7	0.0
2009	10	9	16.7	16.7	0.0
2009	10	10	16.7	16.7	0.0
2009	10	11	16.7	16.7	0.0
2009	10	12	16.7	16.7	0.0
2009	10	13	16.7	16.7	0.0
2009	10	14	16.7	16.7	0.0
2009	10	15	16.7	16.7	0.0
2009	10	16	16.7	16.7	0.0
2009	10	17	16.7	16.7	0.0
2009	10	18	16.7	16.7	0.0
2009	10	19	16.7	16.7	0.0
2009	10	20	16.7	16.7	0.0
2009	10	21	16.7	16.7	0.0
2009	10	22	16.7	16.7	0.0
2009	10	23	16.7	16.7	0.0
2009	10	24	16.7	16.7	0.0
2009	10	25	16.7	16.7	0.0
2009	10	26	16.7	16.7	0.0
2009	10	27	16.7	16.7	0.0
2009	10	28	16.7	16.7	0.0
2009	10	29	16.7	16.7	0.0
2009	10	30	16.7	16.7	0.0
2009	10	31	16.7	16.7	0.0

August 2009 - October 2009 Precision Statistics ($PM_{2.5}$)

Number of Precision Checks (N) =	91
Average Percent Difference (%) =	0.0
Absolute Maximum Daily Percent Difference (%) =	0.0

Appendix B

Calibration Report and Documentation

Prepared for:
ConocoPhillips Alaska, Inc.
Wainwright, Alaska

Wainwright Near-Term Ambient Air Quality Monitoring Program Fourth Quarter Quality Assurance Calibration Report September 11 through 13, 2009

FINAL

Prepared By Doug Bopray

Reviewed By Tom Damiana

AECOM, Inc.
September 2009
Document No.: 01865-104-3230

AECOM

Contents

1.0 Introduction 1-1

1.1 Methodology 1-1

2.0 Summary of Calibration Tests 2-2

3.0 Comments and Recommendations 3-2

3.1 Calibration Comments 3-2

3.2 Calibration Recommendations 3-3

3.3 Station Health and Safety Recommendations 3-3

List of Appendices

Appendix A Calibration Forms

Appendix B Calibration Equipment Certifications

1.0 Introduction

AECOM Environment (AECOM) conducted the fourth quarter Quality Assurance (QA) calibration of the air quality measurement systems at the Wainwright Near-Term Ambient Air Quality Monitoring Station (Wainwright Station) in Wainwright, Alaska. The Wainwright Station is operated for ConocoPhillips Alaska, Inc. (CPAI) by AECOM. The Wainwright station was established because ConocoPhillips Alaska, Inc. (CPAI) proposes to conduct an offshore exploratory drilling program in the Chukchi Sea near Wainwright, Alaska and it is anticipated that any air quality permit application for the proposed project will require Prevention of Significant Deterioration (PSD) quality pre-construction ambient air quality data. Therefore, CPAI has retained AECOM to install and execute an ambient air quality monitoring program located in Wainwright, Alaska. In the near-term, this station will operate from the Wainwright Search and Rescue Headquarters building until a permanent stand-alone station can be established.

The monitoring program has been designed to collect pre-application air quality data suitable to support a PSD major air quality permit application (i.e., PSD quality data). Therefore, the specific monitoring program data quality objectives are to establish a monitoring system to measure, with known bias and precision, the ambient concentrations of the following criteria pollutants to establish compliance with the National Ambient Air Quality Standards (NAAQS) for the monitoring location:

- oxides of nitrogen (NO_x),
- sulfur dioxide (SO_2),
- ozone (O_3),
- carbon monoxide (CO),
- particulate matter with an aerodynamic diameter of 10 microns or less (PM_{10}), and
- particulate matter with an aerodynamic diameter of 2.5 microns or less ($PM_{2.5}$).

A complete description of monitoring program measurement system, source environment, sampling frequency, quality assurance program, and data management are contained in the Quality Assurance Project Plan (QAPP)[1]. This QAPP was approved by the United States Environmental Protection Agency (USEPA) Region 10 Quality Assurance Department on January 5, 2009.

Chris Johnson of AECOM performed the fourth quarterly calibration of the air quality measurement systems on September 11 through 13, 2009. Results of the calibration activities are presented in this report.

1.1 Methodology

Instrument calibration methods used during the tests are consistent with guidelines published in the following documents:

- Ambient Monitoring Guidelines for Prevention of Significant Deterioration. USEPA Office of Air Quality Planning and Standards, Research Triangle Park, North Carolina. EPA 450/4-87-007. May 1987.

[1] Wainwright Near-Term Ambient Air Quality Monitoring Quality Assurance Project Plan, Revision 1, Wainwright, Alaska. Prepared for ConocoPhillips, Inc. January 5, 2009.

- Meteorological Monitoring Guidance for Regulatory Modeling Applications. USEPA Office of Air Quality Planning and Standards, Research Triangle Park, North Carolina. EPA-450/4-99-005. February 2000.
- Quality Assurance Handbook for Air Pollution Measurement Systems. Volume II: Ambient Air Quality Monitoring Program. USEPA. March 1995.
- Supplemental Interim Guidance for Quality Assessment of Continuous PM_{10} Analyzers. Memorandum from W. Mitchell and F. McElroy, Quality Assurance Branch, USEPA Air Measurements Research Division, Research Triangle Park, North Carolina. November 3, 1995.

In brief, the purpose of instrument calibration tests is to challenge monitoring systems with known inputs, verifying that each system response is accurate to within USEPA established tolerances listed in the project monitoring plan. All calibration equipment is traceable to authoritative standards.

2.0 Summary of Calibration Tests

On September 11 through 13, 2009, Chris Johnson conducted calibration checks of all air quality measurement systems. As-found and as-left calibration checks indicated all systems were operating within acceptable limits. Detailed calibration test data is presented in Appendix A. Traceability documentation for the equipment used during the calibrations is presented in Appendix B

3.0 Comments and Recommendations

3.1 Calibration Comments

NO_x – The NO_x measurement system was found reporting measurements to within acceptable limits and did not require an adjustment.

SO_2 – The SO_2 measurement system was found reporting measurements to within acceptable limits and did not require an adjustment.

CO – The CO measurement system was found reporting measurements to within acceptable limits and did not require an adjustment.

O_3 - The O_3 measurement system was found reporting measurements to within acceptable limits and did not require an adjustment.

PM_{10} - The PM_{10} measurement system was found reporting measurements to within acceptable limits and did not require an adjustment.

$PM_{2.5}$ – The $PM_{2.5}$ measurement system was found reporting measurements to within acceptable limits and did not require an adjustment.

All Wainwright station ambient air quality measurement systems were left operating within specifications outlined in the QAPP.

3.2 Calibration Recommendations

There are no calibration recommendations.

3.3 Station Health and Safety Recommendations

The project health and safety plan was reviewed, and no monitoring program health and safety concerns were identified as part of the calibration visit.

Appendix A

Calibration Forms

AECOM MASS FLOW CONTROLLER CALIBRATION/AUDIT FORM

GENERAL INFORMATION

CLIENT: ConocoPhillips
LOCATION: Wainwright
SITE ID: Wainwright 1

DATE: 9-11-09
START TIME (LST): 1200
END TIME (LST): 1700

TECHNICIAN: CJ
OPERATOR: Bob Shears
INITIAL/FINAL: Final

INSTRUMENT DESCRIPTION

MAKE: THERMO
MODEL: 146C
SERIAL #: 0431009061
LAST CAL DATE: 03/05/09

FLOW STANDARD DESCRIPTION

MAKE: BIOS
MODEL: DC LITE
SERIAL #: 7462
LAST CAL DATE: 09/23/08

MAKE: BIOS
MODEL: DC LITE
SERIAL #: 6302
LAST CAL DATE: 09/03/08

VOLTMETER DESCRIPTION

MAKE: NA
MODEL: NA
SERIAL #: NA
LAST CAL DATE: NA

FLOW CALCULATIONS

REFERENCE TEMPERATURE (C): 28.5
REFERENCE PRESSURE(mm Hg): 748

DILUTION FLOW

ACTUAL FLOW (cc/min)	STANDARD FLOW (cc/min)	MFC VOLTAGE (mV)	CALC'D STANDARD FLOW (cc/min)
963.0	936.8	485.00	941.2
2988.0	2906.7	1492.00	2900.9
5018.0	4881.5	2509.00	4880.2
7077.0	6884.4	3540.00	6886.6
8077.0	7857.2	4039.00	7857.7

MFC Slope = 1.9461
MFC Intercept = -2.6906
R Squared = 1.0000

GAS FLOW

ACTUAL FLOW (cc/min)	STANDARD FLOW (cc/min)	MFC VOLTAGE (mV)	CALC'D STANDARD FLOW (cc/min)
10.4	10.1	506.00	10.4
30.3	29.5	1506.00	29.3
49.8	48.5	2508.00	48.2
71.3	69.4	3617.00	69.1
89.4	87.0	4587.00	87.4

MFC Slope = 0.0189
MFC Intercept = 0.9027
R Squared = 0.9999

COMMENTS

FIELD OPS MGR REVIEW DATE:
PROJECT MGR REVIEW DATE:

Revision Date: 01/31/08

AECOM GAS DILUTION CALIBRATION/AUDIT FORM

GENERAL INFORMATION

CLIENT:	ConocoPhillips	DATE:	9-11-09	TECHNICIAN:	CJ
LOCATION:	Wainwright	START TIME (LST):	1200	OPERATOR:	Bob Shears
SITE ID:	Wainwright 1	END TIME (LST):	1700	INITIAL/FINAL:	Initial

ANALYZER DESCRIPTION		CYLINDER DESCRIPTION		CALIBRATOR DESCRIPTION		CALIBRATOR SETTINGS	
MAKE:	THERMO	SERIAL #:	CC149244	MAKE:	THERMO	GAS FLOW SLOPE:	0.0189
MODEL:	48	CONCENTRATION:	3352	MODEL:	146C	GAS FLOW INTERCEPT:	0.9027
SERIAL #:	48-29687-237	CONC UNITS:	PPM	SERIAL #:	0431009061	DILUTION FLOW SLOPE:	1.9461
OUTPUT UNITS:	PPM	EXPIRATION DATE:	05/01/10	LAST CAL DATE:	09/11/09	DILUTION FLOW INTERCEPT:	-2.6906
FULL SCALE VALUE:	50.000						
PARAMETER MEASURED:	CO						

ANALYZER PERFORMANCE

	CALIBRATOR SETTINGS		GAS	DILUTION	ACTUAL	RESULTS	
	GAS	DILUTION	FLOW (cc/min)	FLOW (cc/min)	INPUT (ppm)	ANALYZER OUTPUT (ppm)	PERCENT DIFFERENCE (%)
ZERO	-47.88	2517.14	0.00	4896	0.000	0.330	n/a
PRECISION	665.02	3025.84	13.44	5886	7.630	8.000	4.8
	1295.70	3016.08	25.33	5867	14.410	14.950	3.7
	1845.22	2999.64	35.69	5835	20.380	21.110	3.6
	2584.11	2996.04	49.62	5828	28.300	29.530	4.3
SPAN	3411.58	2991.93	65.22	5820	37.150	38.650	4.0

ANALYZER RESPONSE STATISTICS

CALIBRATION VERIFICATION CRITERIA	RESULTS	PASS/FAIL
Analyzer zero ≤ ±3% of full scale	0.330	P
Span error within ≤ ±15% of full scale	1.500	P
One-point QC check Percent Diff ≤ 10%	4.8	P
All points within ±2% of best-fit line	n/a	P
Slope	1.034	n/a
Intercept	0.169	n/a

AUDIT CRITERIA	MAX % DIFF	PASS/FAIL
% difference of each audited level ≤ 15%	4.8	P

MISCELLANEOUS

INITIAL POT SETTINGS: ZERO: NA SPAN: NA

FINAL POT SETTINGS: ZERO: NA SPAN: NA

INSTRUMENT ZERO ADJUSTED? (YES/NO) no INSTRUMENT SPAN ADJUSTED? (YES/NO) no

MANIFOLD CONDITION (CLEAN/DIRTY) Clean CLEANED? (YES/NO) no

IN-LINE FILTERS CHECKED? (YES/NO) yes REPLACED? (YES/NO)

DESSICANT CHECKED? (YES/NO) yes REPLACED? (YES/NO)

INTAKE LINE CONNECTIONS CHECKED? (YES/NO) yes

ANALYZER PUMP REBUILT/REPLACED? (YES/NO) no SAMPLE PUMP REBUILT/REPLACED? (YES/NO) no

CAPILLARY TUBES INSPECTED? (YES/NO) no CLEANED? (YES/NO) no REPLACED? (YES/NO) no

LIST ANY OTHER REPAIRS/MAINTENANCE/ADJUSTMENTS:

COMMENTS

FIELD OPS MGR REVIEW DATE:

PROJECT MGR REVIEW DATE:

Revision Date: 11/03/08

AECOM GAS DILUTION CALIBRATION/AUDIT FORM

GENERAL INFORMATION

CLIENT:	ConocoPhillips	DATE:	9-11-09	TECHNICIAN:	CJ
LOCATION:	Wainwright	START TIME (LST):	1200	OPERATOR:	Bob Shears
SITE ID:	Wainwright 1	END TIME (LST):	1700	INITIAL/FINAL:	Initial

ANALYZER DESCRIPTION		CYLINDER DESCRIPTION		CALIBRATOR DESCRIPTION		CALIBRATOR SETTINGS	
MAKE:	THERMO	SERIAL #:	CC149244	MAKE:	THERMO	GAS FLOW SLOPE:	0.0189
MODEL:	43C	CONCENTRATION:	41.08	MODEL:	146C	GAS FLOW INTERCEPT:	0.9027
SERIAL #:	0436610008	CONC UNITS:	PPM	SERIAL #:	0431009061	DILUTION FLOW SLOPE:	1.9461
OUTPUT UNITS:	PPM	EXPIRATION DATE:	05/01/10	LAST CAL DATE:	09/11/09	DILUTION FLOW INTERCEPT:	-2.6906
FULL SCALE VALUE:	0.500						
PARAMETER MEASURED:	SO2						

ANALYZER PERFORMANCE

	CALIBRATOR SETTINGS		GAS	DILUTION	ACTUAL	RESULTS	
	GAS	DILUTION	FLOW (cc/min)	FLOW (cc/min)	INPUT (ppm)	ANALYZER OUTPUT (ppm)	PERCENT DIFFERENCE (%)
ZERO	-47.88	2517.14	0.00	4896	0.000	0.001	n/a
PRECISION	665.02	3025.84	13.44	5886	0.094	0.093	-1.1
	1295.70	3016.08	25.33	5867	0.177	0.178	0.6
	1845.22	2999.64	35.69	5835	0.250	0.255	2.0
	2584.11	2996.04	49.62	5828	0.347	0.359	3.5
SPAN	3411.58	2991.93	65.22	5820	0.455	0.471	3.5

ANALYZER RESPONSE STATISTICS

CALIBRATION VERIFICATION CRITERIA	RESULTS	PASS/FAIL
Analyzer zero ≤ ±3% of full scale	0.001	P
Span error within ≤ ±15% of full scale	0.016	P
One-point QC check Percent Diff ≤ 10%	-1.1	P
All points within ±2% of best-fit line	n/a	P
Slope	1.038	n/a
Intercept	-0.003	n/a

AUDIT CRITERIA	MAX % DIFF	PASS/FAIL
% difference of each audited level ≤ 15%	3.5	P

MISCELLANEOUS

INITIAL POT SETTINGS:	ZERO: NA	SPAN: NA	
FINAL POT SETTINGS:	ZERO: NA	SPAN: NA	
INSTRUMENT ZERO ADJUSTED? (YES/NO)	no	INSTRUMENT SPAN ADJUSTED? (YES/NO)	no
MANIFOLD CONDITION (CLEAN/DIRTY)	clean	CLEANED? (YES/NO)	no
IN-LINE FILTERS CHECKED? (YES/NO)	yes	REPLACED? (YES/NO)	
DESSICANT CHECKED? (YES/NO)	yes	REPLACED? (YES/NO)	
INTAKE LINE CONNECTIONS CHECKED? (YES/NO)	yes		
ANALYZER PUMP REBUILT/REPLACED? (YES/NO)	no	SAMPLE PUMP REBUILT/REPLACED? (YES/NO)	no
CAPILLARY TUBES INSPECTED? (YES/NO)	no	CLEANED? (YES/NO) no	REPLACED? (YES/NO) no

LIST ANY OTHER REPAIRS/MAINTENANCE/ADJUSTMENTS:

COMMENTS

FIELD OPS MGR REVIEW DATE:

PROJECT MGR REVIEW DATE:

Revision Date: 11/03/08

AECOM OZONE ANALYZER CALIBRATION/AUDIT FORM

GENERAL INFORMATION

CLIENT: ConocoPhillips
LOCATION: Wainwright
SITE ID: Wainwright 1

DATE: 9-11-09
START TIME (LST): 1200
END TIME (LST): 1700

TECHNICIAN: CJ
OPERATOR: Bob Shears
INITIAL/FINAL: Initial

ANALYZER DESCRIPTION

MAKE: THERMO
MODEL: 49C
SERIAL #: 0431009062
OUTPUT UNITS: PPM
FULL SCALE VALUE: 0.500
MFGR. SPEC'D LINEARITY O3

OZONE STANDARD DESCRIPTION

MAKE: THERMO
MODEL: 49CPS
SERIAL #: 0431009063
LAST CERTIFICATION DATE: 10/24/08

ANALYZER PERFORMANCE

	O_3 SETTING	ACTUAL INPUT (ppm)	ANALYZER OUTPUT (ppm)	PERCENT DIFFERENCE (%)
ZERO	0	0.000	-0.001	n/a
PRECISION	75	0.077	0.078	1.3
	150	0.148	0.148	0.0
	225	0.254	0.249	-2.0
	350	0.348	0.351	0.9
SPAN	450	0.448	0.452	0.9

ANALYZER RESPONSE STATISTICS

CALIBRATION VERIFICATION CRITERIA	RESULTS	PASS/FAIL
Analyzer zero ≤ ±3% of full scale	-0.001	P
Span error within ≤ ±15% of full scale	0.004	P
One-point QC check Percent Diff ≤ 7%	1.3	P
All points within ±2% of best-fit line	n/a	P
Slope	1.0	n/a
Intecept	0.0	n/a

AUDIT CRITERIA	MAX % DIFF	PASS/FAIL
% difference of each audited level ≤ 15%	-2.0	P

MISCELLANEOUS

INITIAL POT SETTINGS: ZERO: NA SPAN: NA
FINAL POT SETTINGS: ZERO: NA SPAN: NA
INSTRUMENT ZERO ADJUSTED? (YES/NO) no
INSTRUMENT SPAN ADJUSTED? (YES/NO) no
MANIFOLD CONDITION (CLEAN/DIRTY) NA
CLEANED? (YES/NO) NA
IN-LINE FILTERS CHECKED? (YES/NO) clean
REPLACED? (YES/NO)
LAMP INTENSITY CHECKED? (YES/NO) yes
REPLACED? (YES/NO)
INTAKE LINE CONNECTIONS CHECKED? (YES/NO) yes
ANALYZER PUMP REBUILT/REPLACED? (YES/NO) no
SAMPLE PUMP REBUILT/REPLACED? (YES/NO)
CAPILLARY TUBES INSPECTED? (YES/NO) no
CLEANED? (YES/NO) no
REPLACED? (YES/NO) no
LIST ANY OTHER REPAIRS/MAINTENANCE/ADJUSTMENTS:

COMMENTS

FIELD OPS MGR REVIEW DATE:
PROJECT MGR REVIEW DATE:

Revision Date: 07/01/08

AECOM NO_X/GPT CALIBRATION/AUDIT FORM

GENERAL INFORMATION

CLIENT: ConocoPhillips
LOCATION: Wainwright
SITE ID: Wainwright 1

DATE: 9-11-09
START TIME (LST): 1200
END TIME (LST): 1700

TECHNICIAN: CJ
OPERATOR: Bob Shears
INITIAL/FINAL: Initial

ANALYZER DESCRIPTION

MAKE: THERMO
MODEL: 42C
SERIAL #: 42C-70181-365
OUTPUT UNITS: PPM
FULL SCALE VALUE: 0.500

CYLINDER DESCRIPTION

SERIAL #: CC149244
CONCENTRATION: 41.02
CONC UNITS: PPM
EXPIRATION DATE: 05/01/10

CALIBRATOR DESCRIPTION

MAKE: THERMO
MODEL: 146C
SERIAL #: 0431009061
LAST CAL DATE: 09/11/09

CALIBRATOR SETTINGS

GAS FLOW SLOPE: 0.0189
GAS FLOW INTERCEPT: 0.9027
DILUTION FLOW SLOPE: 1.9461
DILUTION FLOW INTERCEPT: -2.6906

ANALYZER PERFORMANCE

CALIBRATOR SETTINGS		GAS	DILUTION	INPUT CONCENTRATIONS			ANALYZER RESPONSES			PERCENT DIFFERENCES		
GAS	DILUTION	FLOW (cc/min)	FLOW (cc/min)	NO_X (ppm)	NO_2 (ppm)	NO (ppm)	NO_X (ppm)	NO_2 (ppm)	NO (ppm)	NO_X (%)	NO_2 (%)	NO (%)
-47.88	2517.14	0.0	4896.0	0.000	0.000	0.000	0.000	0.000	0.000	n/a	n/a	n/a
665.02	3025.84	13.4	5886.0	0.093	0.000	0.093	0.088	0.001	0.088	-5.4	n/a	-5.4
1295.70	3016.08	25.3	5867.0	0.176	0.000	0.176	0.169	0.000	0.169	-4.0	n/a	-4.0
1845.22	2999.64	35.7	5835.0	0.249	0.000	0.249	0.241	-0.001	0.243	-3.2	n/a	-2.4
2584.11	2996.04	49.6	5828.0	0.346	0.000	0.346	0.339	0.001	0.339	-2.0	n/a	-2.0
3411.58	2991.93	65.2	5820.0	0.455	0.000	0.455	0.449	0.001	0.449	-1.3	n/a	-1.3
3411.58	2991.93	65.2	5820.0	0.455	0.060	0.395	0.449	0.060	0.390	-1.3	0.6	-1.4
3411.58	2991.93	65.2	5820.0	0.455	0.215	0.240	0.448	0.212	0.236	-1.5	-1.6	-1.5
3411.58	2991.93	65.2	5820.0	0.455	0.314	0.141	0.450	0.312	0.138	-1.1	-0.8	-1.8

ANALYZER RESPONSE STATISTICS

CALIBRATION VERIFICATION CRITERIA	RESULTS			PASS/FAIL		
	NO_X	NO_2	NO	NO_X	NO_2	NO
Analyzer zero ±3% of full scale	0.000	n/a	0.000	P	n/a	P
Span error within ±15% of full scale	-0.006	n/a	-0.006	P	n/a	P
One-point QC check % Diff ≤10%	-5.4	n/a	-5.4	P	n/a	P
All points within ±2% of best-fit line	n/a	n/a	n/a	P	P	P
Slope	0.99	0.99	0.99	n/a	n/a	n/a
Intercept	-0.003	0.001	-0.003	n/a	n/a	n/a

Converter efficiency ≥ 96%	100.3%	P

AUDIT CRITERIA	RESULTS			PASS/FAIL		
	NO_X	NO_2	NO	NO_X	NO_2	NO
% Diff of each audited level ≤ 15%	-5.4	-1.6	-5.4	P	P	P

MISCELLANEOUS

INITIAL POT SETTINGS: ZERO: NA SPAN: NA
FINAL POT SETTINGS: ZERO: NA SPAN: NA
INSTRUMENT ZERO ADJUSTED? (YES/NO) no
INSTRUMENT SPAN ADJUSTED? (YES/NO) no
MANIFOLD CONDITION (CLEAN/DIRTY) clean
CLEANED? (YES/NO) no
IN-LINE FILTERS CHECKED? (YES/NO) yes
REPLACED? (YES/NO)
DESSICANT CHECKED? (YES/NO) yes
REPLACED? (YES/NO)
INTAKE LINE CONNECTIONS CHECKED? (YES/NO) yes
ANALYZER PUMP REBUILT/REPLACED? (YES/NO) no
SAMPLE PUMP REBUILT/REPLACED? (YES/NO) no
CAPILLARY TUBES INSPECTED? (YES/NO) no
CLEANED? (YES/NO) NA REPLACED? (YES/NO) NA
CONVERTER REPLACED? (YES/NO) no
LIST ANY OTHER REPAIRS/MAINTENANCE/ADJUSTMENTS:

COMMENTS

42.2%, 26.5% 17.8%,16.5%, 15.8%

FIELD OPS MGR REVIEW DATE:
PROJECT MGR REVIEW DATE:

Revision Date: 11/03/08

AECOM METONE BAM 1020 PARTICULATE MONITOR CALIBRATION FORM

GENERAL INFORMATION

CLIENT: Conoco Phillips
DATE: 09-12-09
TECHNICIAN: CJ
LOCATION: Wainwright AK
START (LST): 1536
OPERATOR: Bob Shears
SITE ID: Wainwright 1
END (LST): 1700
INITIAL / FINAL: Initial PM10

SENSOR INFORMATION

MAKE: Met One
MODEL: 1020
SERIAL #: H11210
INLET HGT: 6 m
LAST CAL DATE: NA

CALIBRATION/AUDIT STANDARD INFORMATION

FLOW STANDARD		TEMP STANDARD		PRESSURE STANDARD	
MAKE:	Bios	MAKE:	VWR	MAKE:	Meriam
MODEL:	DC Lite	MODEL:	DATA-LOG 50	MODEL:	350
SERIAL NO:	6302	SERIAL #:	256649	SERIAL #:	949570-A1
CAL. DATE:	03-Sep-08	CAL. DATE:	16-Dec-08	CAL. DATE:	26-Sep-08

ACTUAL FLOW COMPARED TO INDICATED FLOW

INLET TEMP (C) 2.8
FLOW STD TEMP (C) 22

ACTUAL FLOW (lpm)	INDICATED FLOW (lpm)	CORRECTED ACT. FLOW (lpm)	PERCENT DIFFERENCE (%)	REQUIRED ACCURACY (%)	PASS/FAIL
17.31	16.67	16.18	-2.9	+/- 4.0	WARN
15.68	15.00	14.66	-2.3	+/- 4.0	WARN
19.15	18.40	17.90	-2.7	+/- 4.0	WARN

ACTUAL FLOW COMPARED TO NOMINAL FLOWS

NOMINAL FLOW (lpm)	ACTUAL FLOW (lpm)	PERCENT DIFFERENCE (%)	REQUIRED ACCURACY (%)	PASS/FAIL
16.67	16.18	-2.9	+/- 5.0	WARN

SPAN CALIBRATION VERIFICATION

SPAN CONC (mg/cm^2)	INDICATED CONC (mg/cm^2)	ERROR (%)	REQUIRED ACCURACY (%)	PASS/FAIL
NA	NA	NA	NA	NA

TEMPERATURE/PRESSURE SENSOR VERIFICATION

ACTUAL TEMP (C)	INDICATED TEMP (C)	ERROR (C)	REQUIRED ACCURACY (C)	PASS/FAIL
2.60	2.80	0.20	+/- 2.0	PASS

ACTUAL PRESSURE (mm Hg)	INDICATED PRESSURE (mm Hg)	ERROR (%)	REQUIRED ACCURACY (%)	PASS/FAIL
750.00	752.00	0.3	+/- 10.0	PASS

AECOM METONE BAM 1020 PARTICULATE MONITOR CALIBRATION FORM

GENERAL INFORMATION

CLIENT:	Conoco Phillips	DATE:	09-12-09	TECHNICIAN:	CJ
LOCATION:	Wainwright AK	START (LST):	1536	OPERATOR:	Bob Shears
SITE ID:	Wainwright 1	END (LST):	1700	INITIAL / FINAL:	Initial PM10

SENSOR INFORMATION

MAKE:	Met One
MODEL:	1020
SERIAL #:	H11210
INLET HGT:	6 m
LAST CAL DATE:	NA

CALIBRATION/AUDIT STANDARD INFORMATION

FLOW STANDARD		TEMP STANDARD		PRESSURE STANDARD	
MAKE:	Bios	MAKE:	VWR	MAKE:	Meriam
MODEL:	DC Lite	MODEL:	DATA-LOG 50	MODEL:	350
SERIAL NO:	6302	SERIAL #:	256649	SERIAL #:	949570-A1
CAL. DATE:	03-Sep-08	CAL. DATE:	16-Dec-08	CAL. DATE:	26-Sep-08

SETUP AND CAL VALUES

CLOCK DATE	9-12-09	FLOW TYPE	Actual	AP	000150
CLOCK TIME	16:58	Cv	.979	FR1	10
STATION	1	Q0	0	FRH	20
RANGE	1	ABS	.789	PASSWORD	F1 F2 F3 F4
BAM SAMPLE	50	m sw	.303	CYCLE MODE	Standard
MET SAMPLE	60	K FACTOR	.0982	RH CONTROL	Yes
OFFSET	-.015	BKGD	-.0018	RH SETPOINT	35
CONC UNITS	mg/m3	STD TEMP	25	DATALOG RH	No
COUNT TIME	4	HEATER	Auto	DELTA-T CONTROL	No
FLOW RATE	16.7	e1	-0.015	DELTA-T SETPOINT	99
CONC TYPE	Actual			DATALOG DELTA-T	No

MISCELLANEOUS

PUWP MUFFLER UNCLOGGED? (YES/NO)	Yes	UNCLOGGED? (YES/NO)	No
SAMPLE NOZZLE CLEAN? (YES/NO)	Yes	CLEANED? (YES/NO)	No
TAPE SUPPORT VANE CLEAN? (YES/NO)	Yes	CLEANED? (YES/NO)	No
CAPSTAN SHAFT CLEAN? (YES/NO)	Yes	CLEANED? (YES/NO)	No
RUBBER PINCH ROLLERS CLEAN? (YES/NO)	Yes	CLEANED? (YES/NO)	No
CHASSIS GROUND WIRE INSTALLED? (YES/NO)	Yes		
PARTICLE TRAP CLEAN? (YES/NO)	Yes	CLEANED? (YES/NO)	No
DRIP JAR EMPTY? (YES/NO)	Yes	EMPTIED? (YES/NO)	No
BUG SCREEN CLEAN? (YES/NO)	NA	CLEANED? (YES/NO)	NA
INLET TUBE WATER-TIGHT SEAL OK? (YES/NO)	Yes	REPLACED? (YES/NO)	No
INLET TUBE PERPENDICULAR TO BAM? (YES/NO)	Yes	FIXED? (YES/NO)	No

LIST ANY OTHER REPAIRS/MAINTENANCE/ADJUSTMENTS:

COMMENTS

Leak check less then 1.0 lpm.

FIELD OPS MGR REVIEW DATE:

PROJECT MGR REVIEW DATE:

Revision Date: 10/17/08

AECOM METONE BAM 1020 PARTICULATE MONITOR CALIBRATION FORM

GENERAL INFORMATION

CLIENT: Conoco Phillips
DATE: 9-13-09
TECHNICIAN: CJ
LOCATION: Wainwright AK
START (LST): 743
OPERATOR: Bob Shears
SITE ID: Wainwright 1
END (LST): 0900
INITIAL / FINAL: Initial PM2.5

SENSOR INFORMATION

MAKE: Met One
MODEL: 1020
SERIAL #: H8581
INLET HGT: 6 m
LAST CAL DATE: 03/05/09

CALIBRATION/AUDIT STANDARD INFORMATION

FLOW STANDARD		TEMP STANDARD		PRESSURE STANDARD	
MAKE:	Bios	MAKE:	VWR	MAKE:	Meriam
MODEL:	DC Lite	MODEL:	DATA-LOG 50	MODEL:	350
SERIAL NO:	6302	SERIAL #:	256649	SERIAL #:	949570-A1
CAL. DATE:	03-Sep-08	CAL. DATE:	16-Dec-08	CAL. DATE:	26-Sep-08

ACTUAL FLOW COMPARED TO INDICATED FLOW

INLET TEMP (C) 2.8
FLOW STD TEMP (C) 24

ACTUAL FLOW (lpm)	INDICATED FLOW (lpm)	CORRECTED ACT. FLOW (lpm)	PERCENT DIFFERENCE (%)	REQUIRED ACCURACY (%)	PASS/FAIL
17.80	16.67	16.53	-0.8	+/- 4.0	PASS
16.00	15.00	14.86	-0.9	+/- 4.0	PASS
19.51	18.40	18.12	-1.5	+/- 4.0	PASS

ACTUAL FLOW COMPARED TO NOMINAL FLOWS

NOMINAL FLOW (lpm)	ACTUAL FLOW (lpm)	PERCENT DIFFERENCE (%)	REQUIRED ACCURACY (%)	PASS/FAIL
16.67	16.53	-0.8	+/- 5.0	PASS

SPAN CALIBRATION VERIFICATION

SPAN CONC (mg/cm^2)	INDICATED CONC (mg/cm^2)	ERROR (%)	REQUIRED ACCURACY (%)	PASS/FAIL
NA	NA	NA	NA	NA

TEMPERATURE/PRESSURE SENSOR VERIFICATION

ACTUAL TEMP (C)	INDICATED TEMP (C)	ERROR (C)	REQUIRED ACCURACY (C)	PASS/FAIL
2.92	2.80	-0.12	+/- 2.0	PASS

ACTUAL PRESSURE (mm Hg)	INDICATED PRESSURE (mm Hg)	ERROR (%)	REQUIRED ACCURACY (%)	PASS/FAIL
754.50	755.00	0.1	+/- 10.0	PASS

AECOM METONE BAM 1020 PARTICULATE MONITOR CALIBRATION FORM

GENERAL INFORMATION

CLIENT:	Conoco Phillips	DATE:	9-13-09	TECHNICIAN:	CJ
LOCATION:	Wainwright AK	START (LST):	743	OPERATOR:	Bob Shears
SITE ID:	Wainwright 1	END (LST):	0900	INITIAL / FINAL:	Initial PM2.5

SENSOR INFORMATION

MAKE:	Met One
MODEL:	1020
SERIAL #:	H8581
INLET HGT:	6 m
LAST CAL DATE:	03/05/09

CALIBRATION/AUDIT STANDARD INFORMATION

FLOW STANDARD		TEMP STANDARD		PRESSURE STANDARD	
MAKE:	Bios	MAKE:	VWR	MAKE:	Meriam
MODEL:	DC Lite	MODEL:	DATA-LOG 50	MODEL:	350
SERIAL NO:	6302	SERIAL #:	256649	SERIAL #:	949570-A1
CAL. DATE:	03-Sep-08	CAL. DATE:	16-Dec-08	CAL. DATE:	26-Sep-08

SETUP AND CAL VALUES

CLOCK DATE	09-13-09	FLOW TYPE	Actual	AP	000150
CLOCK TIME	0744	Cv	1.006	FR1	10
STATION	2	Q0	0	FRH	20
RANGE	1	ABS	.811	PASSWORD	F1 F2 F3 F4
BAM SAMPLE	42	m sw	.303	CYCLE MODE	Standard
MET SAMPLE	60	K FACTOR	1.011	RH CONTROL	Yes
OFFSET	-.015	BKGD	-.0031	RH SETPOINT	35
CONC UNITS	mg/m3	STD TEMP	25	DATALOG RH	Yes
COUNT TIME	8	HEATER	Auto	DELTA-T CONTROL	No
FLOW RATE	16.7	e1	-0.015	DELTA-T SETPOINT	99
CONC TYPE	Actual			DATALOG DELTA-T	No

MISCELLANEOUS

PUWP MUFFLER UNCLOGGED? (YES/NO)	Yes	UNCLOGGED? (YES/NO)	No
SAMPLE NOZZLE CLEAN? (YES/NO)	Yes	CLEANED? (YES/NO)	No
TAPE SUPPORT VANE CLEAN? (YES/NO)	Yes	CLEANED? (YES/NO)	No
CAPSTAN SHAFT CLEAN? (YES/NO)	Yes	CLEANED? (YES/NO)	No
RUBBER PINCH ROLLERS CLEAN? (YES/NO)	Yes	CLEANED? (YES/NO)	No
CHASSIS GROUND WIRE INSTALLED? (YES/NO)	Yes		
PARTICLE TRAP CLEAN? (YES/NO)	Yes	CLEANED? (YES/NO)	No
DRIP JAR EMPTY? (YES/NO)	Yes	EMPTIED? (YES/NO)	No
BUG SCREEN CLEAN? (YES/NO)	NA	CLEANED? (YES/NO)	NA
INLET TUBE WATER-TIGHT SEAL OK? (YES/NO)	Yes	REPLACED? (YES/NO)	No
INLET TUBE PERPENDICULAR TO BAM? (YES/NO)	Yes	FIXED? (YES/NO)	No

LIST ANY OTHER REPAIRS/MAINTENANCE/ADJUSTMENTS:

COMMENTS

Leak check less then 1.0 lpm.

FIELD OPS MGR REVIEW DATE:

PROJECT MGR REVIEW DATE:

Revision Date: 10/17/08

Appendix B

Calibration Equipment Certifications

NVLAP Lab Code 200661

Bios

Driving a Higher Standard in Flow Measurement™

Calibration Certificate

Certificate No.	32620	Sold to:	ENSR International - Westford
Product	DryCal DC-Lite High Flow		1601 Prospect Parkway
Serial No.	6302		Fort Collins, CO 80525
Cal. Date	9/3/2008		USA

All calibrations are performed in accordance with ISO 17025 at Bios International Corporation, 10 Park Place, Butler, NJ, 07405, 800-663-4977, an ISO 17025:2005 – accredited laboratory through NVLAP. This report shall not be reproduced except in full without the written approval of the laboratory. Results only relate to the items calibrated. This report must not be used to claim product certification, approval, or endorsement by NVLAP, NIST, or any agency of the Federal Government.

All units tested in accordance with Bios International Corporation test number PR05-2 or PR01-10 using high-purity bottled nitrogen or dry filtered laboratory air.

As Received Calibration Data

Technician David Stratheran

Lab. Pressure 755 mmHg
Lab. Temperature 22.5 °C

Instrument Reading	Lab Standard Reading	Deviation	Allowable Deviation	As Received
501.5ccm	500.075ccm	0.28%	1.00%	In Tolerance
5000ccm	5000.65ccm	-0.01%	1.00%	In Tolerance
29990ccm	30077ccm	-0.29%	1.00%	In Tolerance

Bios International Standards Used

Description	Standard Serial Number	Calibration Date	Calibration Due Date
ML_500_24	110409	5/16/2008	5/16/2009
ML_500_44	113761	5/1/2008	5/1/2009

Bios

Driving a Higher Standard in Flow Measurement™

As Shipped Calibration Data

Certificate No. 32620
Technician David Stratheran

Lab. Pressure 750 mmHg
Lab. Temperature 22.5 °C

Instrument Reading	Lab Standard Reading	Deviation	Allowable Deviation	As Shipped
501.8ccm	500.47ccm	0.27%	1.00%	In Tolerance
5002ccm	5004.25ccm	-0.04%	1.00%	In Tolerance
29900ccm	30041.5ccm	-0.47%	1.00%	In Tolerance

Bios International Standards Used

Description	Standard Serial Number	Calibration Date	Calibration Due Date
ML_500_24	110409	5/16/2008	5/16/2009
ML_500_44	113761	5/1/2008	5/1/2009

Calibration Notes

Bios is an ISO 17025-accredited metrology laboratory. Each Bios primary gas flow standard is dynamically verified by comparing it to one of our laboratory standards, which is a Proven DryCal® Technology volumetric piston prover of much higher accuracy (± 0.25% or better) but of similar operating principles. For this purpose, a flow generator of ±0.03% stability is used. Our laboratory standards are qualified by direct measurement of their dimensions (diameter, length and time) using NIST-traceable precision gauges and instruments, such as depth micrometers and laser micrometers. NIST numbers for these gauges and instruments are available upon request. Rigorous analyses of our laboratory standards' uncertainties have been performed, in accordance with The Guide to the Expression of Uncertainty in Measurement (the GUM), assuring their traceable accuracy.

Harvey Padden, President and Chief Metrologist

Bios International • 10 Park Place Butler, NJ 07405 • 800.663.4977 • www.biosint.com

NVLAP Lab Code 200661

Bios

Driving a Higher Standard in Flow Measurement™

Calibration Certificate

Certificate No.	32619	Sold to:	ENSR International - Westford
Product	DryCal DC-Lite Low		1601 Prospect Parkway
Serial No.	7462		Fort Collins, CO 80525
Cal. Date	9/3/2008		USA

All calibrations are performed in accordance with ISO 17025 at Bios International Corporation, 10 Park Place, Butler, NJ, 07405, 800-663-4977, an ISO 17025:2005 – accredited laboratory through NVLAP. This report shall not be reproduced except in full without the written approval of the laboratory. Results only relate to the items calibrated. This report must not be used to claim product certification, approval, or endorsement by NVLAP, NIST, or any agency of the Federal Government.

All units tested in accordance with Bios International Corporation test number PR05-2 or PR01-10 using high-purity bottled nitrogen or dry filtered laboratory air.

As Received Calibration Data

Technician David Stratheran

Lab. Pressure 755 mmHg
Lab. Temperature 22.5 °C

Instrument Reading	Lab Standard Reading	Deviation	Allowable Deviation	As Received
31.23ccm	31.178ccm	0.17%	1.00%	In Tolerance
101ccm	100.655ccm	0.34%	1.00%	In Tolerance
502.2ccm	500.535ccm	0.33%	1.00%	In Tolerance

Bios International Standards Used

Description	Standard Serial Number	Calibration Date	Calibration Due Date
ML_500_10	113778	5/1/2008	5/1/2009
ML_500_24	110409	5/16/2008	5/16/2009

Bios

Driving a Higher Standard in Flow Measurement™

As Shipped Calibration Data

Certificate No. 32619
Technician David Stratheran

Lab. Pressure 751 mmHg
Lab. Temperature 22.5 °C

Instrument Reading	Lab Standard Reading	Deviation	Allowable Deviation	As Shipped
30.08ccm	29.986ccm	0.31%	1.00%	In Tolerance
101ccm	100.615ccm	0.38%	1.00%	In Tolerance
502.7ccm	500.52ccm	0.44%	1.00%	In Tolerance

Bios International Standards Used

Description	Standard Serial Number	Calibration Date	Calibration Due Date
ML_500_10	113778	5/1/2008	5/1/2009
ML_500_24	110409	5/16/2008	5/16/2009

Calibration Notes

Bios is an ISO 17025-accredited metrology laboratory. Each Bios primary gas flow standard is dynamically verified by comparing it to one of our laboratory standards, which is a Proven DryCal® Technology volumetric piston prover of much higher accuracy (± 0.25% or better) but of similar operating principles. For this purpose, a flow generator of ±0.03% stability is used. Our laboratory standards are qualified by direct measurement of their dimensions (diameter, length and time) using NIST-traceable precision gauges and instruments, such as depth micrometers and laser micrometers. NIST numbers for these gauges and instruments are available upon request. Rigorous analyses of our laboratory standards' uncertainties have been performed, in accordance with The Guide to the Expression of Uncertainty in Measurement (the GUM), assuring their traceable accuracy.

Harvey Padden, President and Chief Metrologist

Bios International • 10 Park Place Butler, NJ 07405 • 800.663.4977 • www.biosint.com

Airgas

Airgas Speciality Gases
12722 S. Wentworth Avenue
Chicago, IL 60628
1-773-785-3000
FAX: 1-773-785-1928
www.airgas.com

CERTIFICATE OF ANALYSIS
Grade of Product: EPA Protocol

Part Number:	E04NI99E15A36G1	Reference Number:	54-124154664-4
Cylinder Number:	CC149244	Cylinder Volume:	144 Cu.Ft.
Laboratory:	ASG - Chicago - IL	Cylinder Pressure:	2015 PSIG
Analysis Date:	Oct 22, 2008	Valve Outlet:	660

Expiration Date: Oct 22, 2010

Certification performed in accordance with "EPA Treceability Protocol (Sept. 1997)" using the assay procedures listed. Analytical Methodology does not require correction for analytical interferences. This cylinder has a total analytical uncertainty as stated below with a confidence level of 95%. There are no significant impurities which affect the use of this calibration mixture. All concentrations are on a volume/volume besis unless otherwise noted.
Do Not Use This Cylinder below 150 psig.i.e. 1 Mega Pascal

ANALYTICAL RESULTS

Component	Requested Concentration	Actual Concentration	Protocol Method	Total Relative Uncertainty
NITRIC OXIDE	40.00 PPM	41.02 PPM	G1	+/- 1% NIST Traceable
SULFUR DIOXIDE	40.00 PPM	41.08 PPM	G1	+/- 1% NIST Traceable
CARBON MONOXIDE	3250 PPM	3352 PPM	G1	+/- 1% NIST Traceable
NITROGEN	Balance			

Total oxides of nitrogen	41.02 PPM	For Reference Only

CALIBRATION STANDARDS

Type	Lot ID	Cylinder No	Concentration	Expiration Date
NTRM	60610	CC205936	49.38PPM NITRIC OXIDE/	May 01, 2010
NTRM/SO2	052405	CC208182	45.91PPM SULFUR DIOXIDE/	Sep 12, 2010
NTRM/CO	62708	SG9105910BAL	5019PPM CARBON MONOXIDE/	Oct 02, 2010

ANALYTICAL EQUIPMENT

Instrument/Make/Model	Analytical Principle	Last Multipoint Calibration
HORIBA 510	NDIR	Oct 08, 2008
Thermo 6700	FTIR	Oct 08, 2008
Thermo 6700	FTIR	Oct 08, 2008

Triad Data Available Upon Request

Notes:

Curt Stewart

QA Approval

17035 Westview Avenue
South Holland, IL 60473
Phone: 800-373-1759
www.callabco.com
il@callabco.com

CAL LAB

CERTIFICATE OF CALIBRATION

465562

Customer:

ENSR AECOM (8733)
1601 Prospect Parkway
Fort Collins, Colorado 80525-9769
PO Number: 0084-09963

Instrument:

Manufacturer: Meriam Instrument
Model: 355-AI0900
Asset ID #: 949570-A1
Serial #: 949570-A1
Description: Manometer, 900 mmHgA

Calibration Information

Temperture / Humidity: 70° F / 40% RH
Calibrated: In House
Calibration Seals: Intact
Condition As Found: Fully operational and within tolerance
Action Taken/ As Left: Calibrated to Manufacturer Specifications and within tolerance

Calibration Interval: 12 Months
Calibration Date: 09/26/2008
Calibration Due Date: 09/26/2009
Calibration Procedure: 33K6-4-1763-1

Technical Remarks: Instrument required repairs by the manufacturer prior to calibration.

All functions and ranges were checked unless otherwise stated. This certificate may not be reproduced, except in its entirety without the written permission of Cal Lab Co, Inc. This report certifies that all calibration standards used in the test are traceable to NIST, and calibrated in accordance with ISO/IEC 17025:2005. This Instrument was calibrated with a minimum 4:1 TAR unless otherwise stated.

Technician: Luefling, Adam Technician

Quality Reviewer: Mike Booth 09/26/2008
Quality Team

Calibration Standards Used

Cal. Date	Due Date	Standard I.D.	Manufacturer	Model #	Description	Serial
10/03/2005	10/03/2008	1003-1529	Ruska	2465-799	Dead Weight Tester Mass	40132
09/29/2005	09/29/2008	1003-1532	Ruska	2465-725	Low-Range DWT Piston	TL-1022
06/17/2008	06/30/2009	1003-1600	Meriam Instruments	355-AI0900	Manometer, Digital, Absolute	937220-P1
06/30/2008	06/30/2009	1003-2006	Fluke	52 II	Digital Temp. Meter	74850024
07/22/2008	07/31/2012	1003-2118	Rice Lake	1MG-100G	Weight Set, Class 2	7228-1

UNITED STATES ENVIRONMENTAL PROTECTION AGENCY
REGION 8
1595 Wynkoop Street
DENVER, CO 80202-1129
Phone 800-227-8917
http://www.epa.gov/region08

JAN 12 2009

Ref: 8P-AR

Henry Sofai
c/o ENSR
1601 Prospect Parkway
Fort Collins, CO 80525-8878

Dear Mr. Sofai:

This letter contains summary information for the October 24, 2008 verification of the Thermo Electron Corporation Model 49C Ozone Primary Standard s/n 0431009063 (ENSR 1), owned by ENSR. Michael Copeland, of my staff, conducted the verification at the Region 8 Air Laboratory in Golden, Colorado by comparing your instrument to the EPA Region 8 Standard Reference Photometer Serial No. 8 (SRP 8), at ten concentration levels between 0 and 500 ppb Ozone.

SRP 8 is verified annually against SRP 7 (SRP 7 is maintained by EPA's RTP laboratory in North Carolina). The results of the most recent SRP 8 vs. SRP 7 verification, conducted on May 29, 2007, were:

Parameter	**Reading**
Linear regression of SRP 8 vs. SRP 7	SRP 8 = 1.00616 x SRP 7 + 0.09791, R^2 = 1.00000

ENSR 1's Calibration Factors were adjusted as follows:

Calibration Factors for ENSR 1	**Before adjustment**	**After adjustment**
Ozone Background ppb	-(0.7)	-(0.7)
Ozone Coefficient	1.017	1.026

For each concentration generated during the ENSR verifications, readings were recorded from the ENSR serial inputs directly by SRP 8's RS-232 input, and the corresponding reading from SRP 8. Details of the comparison between the SRP 8 and the ENSR input are enclosed for your review. Below is a summary of the comparison:

Parameter	**Reading**
Linear regression of SRP 8 vs. ENSR 1	ENSR 1 = 1.00230 x SRP 8 + 0.17535, R^2 = 1.00000

Printed on Recycled Paper

Verifications of UV photometers are evaluated according to the criteria stated in Section 5.5 of the "Standard Operating Procedures and Recertification Procedures for EPA's Standard Reference Ozone Photometer," September 1997. The "acceptable" range for the slope is 0.970 to 1.030 for primary standards and the "acceptable" range for the intercept is +/- 3 ppb. Slopes in the 0.95-0.97 or 1.03-1.05 ranges are considered "marginally acceptable" and intercepts greater than +/- 5 ppb may be "indicative of a problem with the primary standard under check". With a direct uncorrected comparison, your instrument's output had slope and intercept values in the "acceptable" range. **NOTE: these data are only to be used to determine if the primary standard verification passes or fails and are not to be used as a correction factor for primary standard data.**

If you have any questions regarding this verification, please call Michael Copeland at (303) 312-6010 or e-mail him at copeland.michael@epa.gov.

Sincerely,

Carl Daly

Carl Daly, Unit Chief
Air Permitting, Monitoring, and Modeling Unit
Air Program

cc: Brian Jesse, ENSR

Enclosure

Printed on Recycled Paper

Standard Reference Photometer
Calibration Report

Calibrating Institute:	EPA Region 8	**Date:**	24-Oct-08
Operator:	Copeland	**Start Time:**	10:13
Instrument:	SRP8 Cell Length=89.45	**End Time:**	11:56
Comment:	Verification of ENSR's Thermo 49C-PS (s/n 043100906:	**Filename:**	c1024001.xls

Calibrated Instrument:	ENSR Serial	**Calibration**		**Standard**
Owner:	ENSR	**Results**	**Value**	**Uncertainty**
Contact:	Henry Sofai	**Slope**	1.00230	0.00046
Make:	Thermo	**Intercept**	0.17535	0.11485
Model:	Thermo 49C Primary Standard	**Covariance**		-5.2195E-08
Serial Number:	431009063	**Res Std Dev**	0.20894	

Calibration Parameters: Zero Start&End;Randomized;Raw Saved;Dark Count On (4)

Air Flow Rate: 5.0 l/min

Lamp Intensity Range: 0.0 to 45.0 %

Number Conc. Points: 10 **Points/Concentration:** 10

Conditioning: 50.0 % for 5 minutes

Calibration	SRP8		ENSR Serial		ENSR Serial	
Data Points	Result	Std. Dev	Result	Std. Dev	Predicted	Residual
Dark Count 1	10					
Dark Count 2	10					
1	0.3	0.2	0.6	0.2	0.51	0.09
2	449.8	0.3	450.7	0.3	450.97	-0.24
3	392.5	0.2	393.5	0.3	393.59	-0.13
4	49.8	0.3	49.9	0.2	50.04	-0.19
5	278.5	0.2	279.3	0.2	279.31	-0.05
6	335.0	0.2	336.3	0.2	335.95	0.37
7	163.6	0.4	164.1	0.2	164.12	-0.05
8	106.7	0.2	107.0	0.2	107.08	-0.09
9	220.2	0.2	221.2	0.2	220.85	0.35
10	0.5	0.3	0.6	0.2	0.63	-0.05

Printed on Recycled Paper

Date: 24-Oct-08
Filename: c1024001.xls

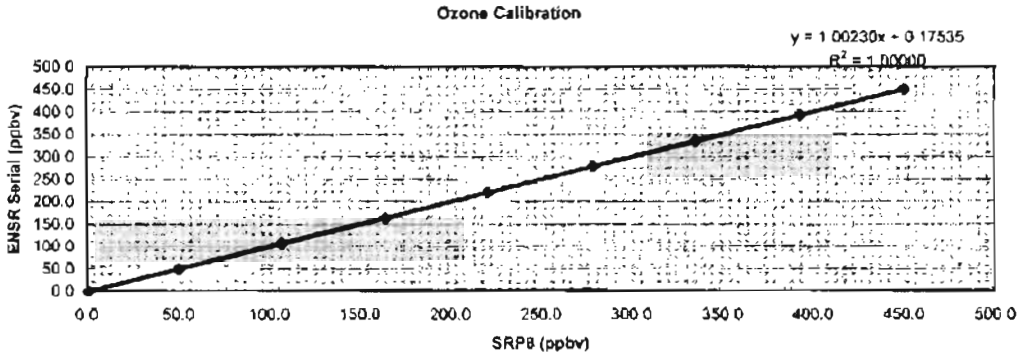

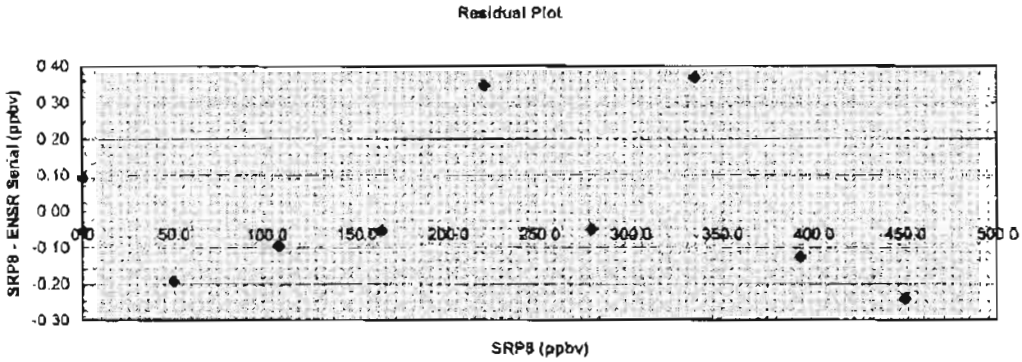

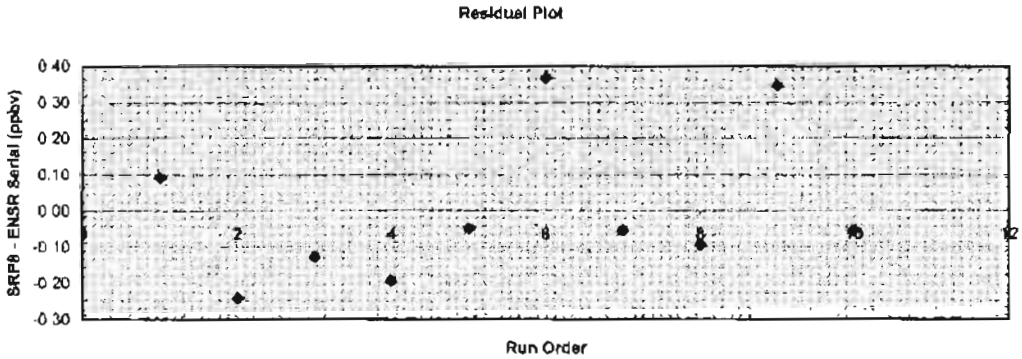

Printed on Recycled Paper

3251 Lewiston St., Suite 12
Aurora, CO 80011
(303) 364-8325
Fax (303) 364-8353
(800) 452-1463
www.newark.com

Services

ISO 9001:2000 CERTIFIED

CERTIFICATE OF CALIBRATION

CERTIFICATE #: 236405-4

CUSTOMER : ENSR

ADDRESS :
1601 PROSPECT PKWY
FORT COLLINS CO 80525

CUSTOMER P.O. : 2068742

COST CENTER :

MFR : VWR
MODEL : DATA-LOG 50 MEMORY
SERIAL # : 22069842
ID # : DT02
BARCODE : 256649
DESC. : DIGITAL THERMOMETER W/ PROBE

AS RECEIVED : INOPERABLE

AS RETURNED : IN TOLERANCE

CALIBRATION PROCEDURE : CAL-06/CAL-03

ACCURACY SPECIFICATIONS : FACTORY SPECIFICATION

ENVIRONMENT : TEMP : 74.3 DEG F **HUMIDITY :** 38 %

NEWARK SERVICES MAINTAINS A QUALITY SYSTEM THAT USES CALIBRATED STANDARDS WHOSE ACCURACIES ARE TRACEABLE TO THE GENERAL CONFERENCE ON WEIGHTS AND MEASURES, THE NATIONAL INSTITUTE OF STANDARDS AND TECHNOLOGY, OR FUNDAMENTAL OR NATURAL PHYSICAL CONSTANTS. OUR QUALITY MANAGEMENT SYSTEM IS ISO 9001:2000 CERTIFIED AND COMPLIES WITH ANSI/NCSL Z540.1-1994 AND ISO 10012:2003. NEWARK SERVICES DOES HEREBY CERTIFY THAT THE ABOVE LISTED INSTRUMENT MEETS OR EXCEEDS THE ABOVE LISTED SPECIFICATIONS.

WORK PERFORMED BY:

CALIBRATED BY : CONTROL COMPANY **DATE :** 12/16/2008

REPAIRED BY : CONTROL COMPANY **DATE :** 12/16/2008

APPROVED BY & TITLE : **DATE :** 12/16/2008

Corporate Metrology Manager

CALIBRATION DUE DATE : 12/16/2009

COVER CERTIFICATION

SEE ATTACHED CERTIFICATE # 4000-2059098/4021-2059048

WRITTEN APPROVAL MUST BE OBTAINED FOR REPRODUCTION OF THIS DOCUMENT IF OTHER THAN IN FULL

Calibration Certificate No. 1750.01

Calibration complies with ISO 9001 ISO/IEC 17025 AND ANSI/NCSL Z540-1

Cert. No.: 4000-2059098

Traceable® Certificate of Calibration for Digital Thermometer

Instrument Identification:

Newark InOne, 3251 Lewiston St, Ste12, Dock18 Or19/Stephanie Flaherty, Aurora, CO 80011 U.S.A. (RMA:946154)

Model: 61220-601 S/N: 22069842 Manufacturer : Control Company

Model: 61220-604 S/N: 80539075

Standards/Equipment:

Description	Serial Number	Due Date	NIST Traceable Reference
Temperature Calibration Bath TC191	A79341		
Thermistor Module	A17118	11/08/09	A8B10067
Temperature Probe	3039	11/26/09	A8B11055
Temperature Probe	149	3/06/09	A82225037-3
Thermistor Module	A27129	8/22/09	1000248949
Temperature Calibration Bath TC218	A73332		

Certificate Information:

Technician: 68 Procedure: CAL-06 Cal Date: 12/16/08 **Cal Due: 12/16/09**

Test Conditions: 23.5°C 38.0 %RH 1022 mBar

Calibration Data:

Unit(s)	Nominal	As Found	In Tol	Nominal	As Left	In Tol	Min	Max	±uc	TUR
°C		N.A.		0.001	-0.001	Y	-0.049	0.051	0.013	3.8:1
°C		N.A.		25.001	24.999	Y	24.951	25.051	0.013	3.8:1
°C		N.A.		60.001	59.998	Y	59.951	60.051	0.018	2.8:1
°C		N.A.		100.001	99.998	Y	99.951	100.051	0.013	3.8:1

This Instrument was calibrated using Instruments Traceable to National Institute of Standards and Technology.

A Test Uncertainty Ratio of at least 4:1 is maintained unless otherwise stated and is calculated using the expanded measurement uncertainty. Uncertainty evaluation includes the instrument under test and is calculated in accordance with the ISO "Guide to the Expression of Uncertainty in Measurement" (GUM). The uncertainty represents an expanded uncertainty using a coverage factor k=2 to approximate a 95% confidence level. In tolerance conditions are based on test results falling within specified limits with no reduction by the uncertainty of the measurement. The results contained herein relate only to the item calibrated. This certificate shall not be reproduced except in full, without written approval of Control Company.

Nominal=Standard's Reading; As Left=Instrument's Reading; In Tol=In Tolerance; Min/Max=Acceptance Range; ±uc=Measurement Uncertainty; TUR=Test Uncertainty Ratio; Accuracy=±(Max-Min)/2; Min = Nominal(Rounded) - Tolerance; Max = Nominal(Rounded) + Tolerance; Date=MM/DD/YY

Wallace Berry

Wallace Berry, Technical Manager

Maintaining Accuracy:

In our opinion once calibrated your Digital Thermometer should maintain its accuracy. There is no exact way to determine how long calibration will be maintained. Digital Thermometers change little, if any at all, but can be affected by aging, temperature, shock, and contamination.

Recalibration:

For factory calibration and re-certification traceable to National Institute of Standards and Technology contact Control Company.

CONTROL COMPANY 4455 Rex Road Friendswood, TX 77546 USA
Phone 281 482-1714 Fax 281 482-9448 service@control3.com www.control3.com

Control Company is an ISO 17025:2005 Calibration Laboratory Accredited by (A2LA) American Association for Laboratory Accreditation, Certificate No. 1750.01.
Control Company is ISO 9001:2000 Quality Certified by (DNV) Det Norske Veritas, Certificate No. CERT-01805-AO-HOU.
International Laboratory Accreditation Cooperation (ILAC) - Multilateral Recognition Arrangement (MRA).

Traceable® is a registered trademark of Control Company © 2005 Control Company

Calibration complies with ISO/IEC 17025 and ANSI/NCSL Z540-1

Cert. No.:4021-2059048

Traceable® Certificate of Calibration for Micro Probe

Instrument Identification:

Newark InOne, 3251 Lewiston St, Ste12, Dock18 Or19/Stephanie Flaherty, Aurora, CO 80011 U.S.A. (RMA:946154)

Model: 4021 S/N: 72667563 Manufacturer : Control Company

Standards/Equipment:

Description	Serial Number	Due Date	NIST Traceable Reference
Temperature Calibration Bath TC179	A45240		
Thermistor Module	A17118	11/08/09	A8B10067
Temperature Probe	128	11/17/09	A8B10050
Digital Thermometer	240114851	5/14/09	4000-1880568

Certificate Information:

Technician: 68 Procedure: CAL-03 Cal Date: 12/16/08 **Cal Due: 12/16/09**

Test Conditions: 23.5°C 36.0 %RH 1025 mBar

Calibration Data:

Unit(s)	Nominal	As Found	In Tol	Nominal	As Left	In Tol	Min	Max	±uc	TUR
°C		N.A.		37.001	37.2	Y	36.8	37.2	0.059	3.6:1

This Instrument was calibrated using Instruments Traceable to National Institute of Standards and Technology.

A Test Uncertainty Ratio of at least 4:1 is maintained unless otherwise stated and is calculated using the expanded measurement uncertainty. Uncertainty evaluation includes the instrument under test and is calculated in accordance with the ISO "Guide to the Expression of Uncertainty in Measurement" (GUM). The uncertainty represents an expanded uncertainty using a coverage factor k=2 to approximate a 95% confidence level. In tolerance conditions are based on test results falling within specified limits with no reduction by the uncertainty of the measurement. The results contained herein relate only to the item calibrated. This certificate shall not be reproduced except in full without the written permission of Control Company.

Wallace Berry

Wallace Berry, Technical Manager

Nominal=Standard's Reading; As Left=Instrument's Reading; In Tol=In Tolerance; Min/Max=Acceptance Range; ±uc=Measurement Uncertainty; TUR=Test Uncertainty Ratio; Accuracy=±(Max-Min)/2

Maintaining Accuracy:

In our opinion once calibrated your Micro Probe should maintain its accuracy. There is no exact way to determine how long calibration will be maintained. Micro Probes change little, if any at all, but can be affected by aging, temperature, shock, and contamination.

Recalibration:

For factory calibration and re-certification traceable to National Institute of Standards and Technology contact Control Company.

Control Company 4455 Rex Road Friendswood, TX 77546 USA
Phone 281 482-1714 Fax 281 482-9448 service@control3.com www.control3.com

Control Company is ISO 9001 Quality Certified by (DNV) Det Norske Veritas, Certificate No. CERT-01805-AQ-HOU.

 Traceable® is a registered trademark of Control Company © 2004 Control Company

October 1, 2009 CO Adjustment Calibration Forms

AECOM GAS DILUTION CALIBRATION/AUDIT FORM

GENERAL INFORMATION

CLIENT: ConocoPhillips
LOCATION: Wainwright
SITE ID: Wainwright 1

DATE: 10-01-09
START TIME (LST): 0900
END TIME (LST): 1300

TECHNICIAN: Henry Sofai
OPERATOR: Bob Shears
INITIAL/FINAL: Initial

ANALYZER DESCRIPTION

MAKE: Thermo
MODEL: 48
SERIAL #: 48-29687-237
OUTPUT UNITS: PPM
FULL SCALE VALUE: 50.000
PARAMETER MEASURED: CO

CYLINDER DESCRIPTION

SERIAL #: CC149244
CONCENTRATION: 3352
CONC UNITS: PPM
EXPIRATION DATE: 05/01/10

CALIBRATOR DESCRIPTION

MAKE: THERMO
MODEL: 146C
SERIAL #: 0431009061
LAST CAL DATE: 09/11/09

CALIBRATOR SETTINGS

GAS FLOW SLOPE: 0.0189
GAS FLOW INTERCEPT: 0.9027
DILUTION FLOW SLOPE: 1.9461
DILUTION FLOW INTERCEPT: -2.6906

ANALYZER PERFORMANCE

	CALIBRATOR SETTINGS		GAS	DILUTION	ACTUAL	RESULTS	
	GAS	DILUTION	FLOW (cc/min)	FLOW (cc/min)	INPUT (ppm)	ANALYZER OUTPUT (ppm)	PERCENT DIFFERENCE (%)
ZERO			0.00	4886	0.000	1.200	n/a
PRECISION			21.30	4861	14.630	16.270	**11.2**
			13.48	5870	7.680	9.260	**20.6**
SPAN			53.40	4834	36.630	39.550	**8.0**

ANALYZER RESPONSE STATISTICS

CALIBRATION VERIFICATION CRITERIA	RESULTS	PASS/FAIL
Analyzer zero ≤ ±3% of full scale	1.200	Warning
Span error within ≤ ±15% of full scale	2.920	Pass
One-point QC check Percent Diff ≤ 10%	11.2	**FAIL**
All points within ±2% of best-fit line	n/a	Pass
Slope	1.047	n/a
Intercept	1.145	n/a

AUDIT CRITERIA	MAX % DIFF	PASS/FAIL
% difference of each audited level ≤ 15%	20.6	**FAIL**

MISCELLANEOUS

INITIAL POT SETTINGS: ZERO: _____ SPAN: _____
FINAL POT SETTINGS: ZERO: _____ SPAN: _____
INSTRUMENT ZERO ADJUSTED? (YES/NO) _____ INSTRUMENT SPAN ADJUSTED? (YES/NO) _____
MANIFOLD CONDITION (CLEAN/DIRTY) _____ CLEANED? (YES/NO) _____
IN-LINE FILTERS CHECKED? (YES/NO) _____ REPLACED? (YES/NO) _____
DESSICANT CHECKED? (YES/NO) _____ REPLACED? (YES/NO) _____
INTAKE LINE CONNECTIONS CHECKED? (YES/NO) _____
ANALYZER PUMP REBUILT/REPLACED? (YES/NO) _____ SAMPLE PUMP REBUILT/REPLACED? (YES/NO) _____
CAPILLARY TUBES INSPECTED? (YES/NO) _____ CLEANED? (YES/NO) _____ REPLACED? (YES/NO) _____
LIST ANY OTHER REPAIRS/MAINTENANCE/ADJUSTMENTS: _____

COMMENTS

Calibration check prior to adjustment

FIELD OPS MGR REVIEW DATE: _____
PROJECT MGR REVIEW DATE:

Revision Date: 10/20/09

AECOM GAS DILUTION CALIBRATION/AUDIT FORM

GENERAL INFORMATION

CLIENT: ConocoPhillips
LOCATION: Wainwright
SITE ID: Wainwright 1

DATE: 10-01-09
START TIME (LST): 0900
END TIME (LST): 1300

TECHNICIAN: Henry Sofai
OPERATOR: Bob Shears
INITIAL/FINAL: Final

ANALYZER DESCRIPTION

MAKE: Thermo
MODEL: 48
SERIAL #: 48-29687-237
OUTPUT UNITS: PPM
FULL SCALE VALUE: 50.000
PARAMETER MEASURED: CO

CYLINDER DESCRIPTION

SERIAL #: CC149244
CONCENTRATION: 3352
CONC UNITS: PPM
EXPIRATION DATE: 05/01/10

CALIBRATOR DESCRIPTION

MAKE: THERMO
MODEL: 146C
SERIAL #: 0431009061
LAST CAL DATE: 09/11/09

CALIBRATOR SETTINGS

GAS FLOW SLOPE: 0.0189
GAS FLOW INTERCEPT: 0.9027
DILUTION FLOW SLOPE: 1.9461
DILUTION FLOW INTERCEPT: -2.6906

ANALYZER PERFORMANCE

	CALIBRATOR SETTINGS		GAS	DILUTION	ACTUAL	RESULTS	
	GAS	DILUTION	FLOW (cc/min)	FLOW (cc/min)	INPUT (ppm)	ANALYZER OUTPUT (ppm)	PERCENT DIFFERENCE (%)
ZERO			0.00	4887	0.000	0.099	n/a
PRECISION			10.68	5877	6.081	5.712	**-6.1**
			13.45	5866	7.670	7.320	-4.6
			21.32	4867	14.620	13.960	-4.5
			41.21	4840	28.300	27.700	-2.1
SPAN			53.49	4830	36.710	36.310	-1.1

ANALYZER RESPONSE STATISTICS

CALIBRATION VERIFICATION CRITERIA	RESULTS	PASS/FAIL
Analyzer zero ≤ ±3% of full scale	0.099	Pass
Span error within ≤ ±15% of full scale	-0.400	Pass
One-point QC check Percent Diff ≤ 10%	-6.1	Warning
All points within ±2% of best-fit line	n/a	Pass
Slope	0.989	n/a
Intercept	-0.213	n/a

AUDIT CRITERIA	MAX % DIFF	PASS/FAIL
% difference of each audited level ≤ 15%	-6.1	Pass

MISCELLANEOUS

INITIAL POT SETTINGS: ZERO: _____ SPAN: _____
FINAL POT SETTINGS: ZERO: _____ SPAN: _____
INSTRUMENT ZERO ADJUSTED? (YES/NO) _____ INSTRUMENT SPAN ADJUSTED? (YES/NO) _____
MANIFOLD CONDITION (CLEAN/DIRTY) _____ CLEANED? (YES/NO) _____
IN-LINE FILTERS CHECKED? (YES/NO) _____ REPLACED? (YES/NO) _____
DESSICANT CHECKED? (YES/NO) _____ REPLACED? (YES/NO) _____
INTAKE LINE CONNECTIONS CHECKED? (YES/NO) _____
ANALYZER PUMP REBUILT/REPLACED? (YES/NO) _____ SAMPLE PUMP REBUILT/REPLACED? (YES/NO) _____
CAPILLARY TUBES INSPECTED? (YES/NO) _____ CLEANED? (YES/NO) _____ REPLACED? (YES/NO) _____
LIST ANY OTHER REPAIRS/MAINTENANCE/ADJUSTMENTS: _____

COMMENTS

Calibration check following adjustment

FIELD OPS MGR REVIEW DATE: _____
PROJECT MGR REVIEW DATE:

Revision Date: 10/20/09

Appendix C

Quality Assurance Audit Report

QUALITY ASSURANCE AUDIT REPORT

AECOM / ConocoPhillips-Wainwright
AMBIENT AIR QUALITY MONITORING STATION (Near-Term)

Third Calendar Quarter
September 2009

Prepared for:

AECOM Environment
1601 Prospect Parkway
Fort Collins, Colorado 80525

Date: October 15, 2009

AMSTECH
Air Monitoring Services and Technology, LLC
7321 Poston Way Boulder, Colorado 80301-6403 Voice / FAX 303 581 9035

TABLE OF CONTENTS

SECTION	TITLE	PAGE
1.0	INTRODUCTION	1
2.0	PERFORMANCE AUDIT METHODOLOGY	1
	Continuous SO_2, CO, and NO-NO_2-NO_X Pollutant Analyzers	2
	Continuous Ozone Analyzer	3
	Continuous PM_{10} and $PM_{2.5}$ Particulate Monitors	3
3.0	SUMMARY OF PERFORMANCE AUDIT TESTS	3
4.0	OBSERVATIONS AND RECOMMENDATIONS	4

NUMBER	LIST OF TABLES	PAGE
1	PERFORMANCE AUDIT METHODS AND ACCEPTANCE LIMITS	2
2	SUMMARY OF PERFORMANCE AUDIT PASS/FAIL RESULTS	4

LETTER	APPENDICES	PAGE
A	INSTRUMENT PERFORMANCE AUDIT REPORTS	
	Sulfur Dioxide Analyzer Audit Report	A-1
	Carbon Monoxide Analyzer Audit Report	A-2
	Oxides of Nitrogen Analyzer Audit Report	A-3, 4, 5
	Ozone Analyzer Audit Report	A-6
	Continuous PM_{10} Particulate Audit Report	A-7
	Continuous $PM_{2.5}$ Particulate Audit Report	A-8
B	AUDIT EQUIPMENT CERTIFICATION DOCUMENTATION	

QUALITY ASSURANCE AUDIT REPORT

AECOM / ConocoPhillips-Wainwright
AMBIENT AIR QUALITY MONITORING STATION (Near-Term)

Wainwright, Alaska

Third Calendar Quarter
September 2009

1.0 INTRODUCTION

Air Monitoring Services and Technology, LLC (AMSTech), under contract to AECOM Environmental (AECOM), conducted an initial quarterly instrument performance quality assurance (QA) audit at AECOM's ambient air quality monitoring station located in Wainwright, Alaska. The monitoring station is instrumented to collect oxides of nitrogen (NO, NO_X, NO_2), sulfur dioxide (SO_2), ozone (O_3), carbon monoxide (CO), inhalable particulate (PM_{10}), and fine particulate ($PM_{2.5}$) air quality data. AMSTech conducted this quarter's audit tests on September 25, 2009.

This report describes the methods and equipment used to conduct the QA audit tests and presents the audit results in tabular summary format in the body of this report. Detailed reports of the audit tests conducted on each instrument are found in Appendix A, Instrument Performance Audit Reports. Appendix B contains the certification documents for the audit equipment used during the tests.

2.0 PERFORMANCE AUDIT METHODOLOGY

The instrument performance audit methods used during the tests are consistent with guidelines published by the United States Environmental Protection Agency (USEPA) for air pollution monitoring systems[1, 2]. In brief, the performance of each instrument audited this quarter was challenged with a known input from an appropriate piece of audit equipment. Each instrument's observed response, as reported by the station's data acquisition system (DAS), was noted and the relative difference between the known audit input and observed DAS response was used to assess the instrument's accuracy. Table 1 lists the performance audit methods and limits used to audit each parameter monitored at the station.

[1] Ambient Monitoring Guidelines for Prevention of Significant Deterioration (PSD), USEPA, May 1987.
[2] Quality Assurance Handbook for Air Pollution Measurement Systems: Volume II. Ambient Air Monitoring Program, USEPA, December 2008.

Table 1

PERFORMANCE AUDIT METHODS AND ACCEPTANCE LIMITS

Parameter	Audit Method	Acceptance Limits	Traceability
Sulfur Dioxide (SO_2)	Dynamic dilution of concentrated gas cylinder	Accuracy = ≤15% absolute error per audit test point	Biannual recert. of gas cyl.; qtrly flow cal.
Carbon Monoxide (CO)	Dynamic dilution of concentrated gas cylinder	Accuracy = ≤15% absolute error per audit test point	Biannual recert. of gas cyl.; qtrly flow cal.
Oxides of Nitrogen (NO-NO_X-NO_2)	Dynamic dilution of concentrated gas cylinder	Accuracy = ≤15% absolute error per audit test point Converter Efficiency = ≥96%	Biannual recert. of gas cyl.; qtrly flow cal.
Ozone (O_3)	Certified ozone transfer standard	Accuracy = ≤15% absolute error per audit test point	Quarterly recert. of transfer standard.
10-micron Particulate (BAM PM_{10})	NIST-traceable flow meter	≤ 4% of audit standard per audit test point ≤ 5% of design flow rate	Annual recert. of flow meter.
2.5-micron Particulate (BAM $PM_{2.5}$)	NIST-traceable flow meter	≤ 4% of audit standard per audit test point ≤ 5% of design flow rate	Annual recert. of flow meter.

Brief descriptions of the auditing methods and equipment used to conduct the instrument performance audits at the monitoring station are as follows:

Continuous SO_2, CO, and NO-NO_2-NO_X Pollutant Analyzers: The station's SO_2, CO, and NO-NO_2-NO_X analyzers were audited using the same general procedure. An ESC 7700P dilution calibrator and associated zero air source were used to generate audit concentrations of the specific test gases by dynamic dilution of an NIST-traceable cylinder containing a mixture of concentrated SO_2, CO and NO in ultra pure nitrogen. Concentrations of NO_2 audit test gas were produced by gas phase titration of NO with ozone generated by the 7700P's internal UV source lamp. As required by USEPA's Prevention of Significant Deterioration (PSD) guidelines, a zero plus at least three upscale gas concentrations were delivered to each pollutant analyzer. Audit test gases for the SO_2, and NO-NO_2-NO_X analyzers were generated in the following ranges; 30 to 80, 150 to 200, and 350 to 450 parts per billion (PPB). The CO analyzer received test gas concentrations in the ranges of 3 to 8, 15 to 20, and 35 to 45 parts per million (PPM). The audit test gases passed through as much of the complete sample line as possible, including all connectors and filters. A converter efficiency check was performed on the oxides of nitrogen analyzer to confirm that the NO_2 to NO conversion was 96 percent or greater. Analyzer accuracy was calculated by determining the difference between the known audit test gas concentrations and the observed analyzer response, expressed as percent difference.

Continuous Ozone Analyzer: Ozone audit test gas concentrations were generated by a certified ozone transfer standard internal to the ESC 7700P unit. The 7700P's ozone transfer standard is certified twice per calendar quarter by a Dasibi 1008-PC primary ozone standard maintained at AMSTech. The ozone audit test gas concentrations consisted of a zero (ozone-free test point) plus one test point from each of three ranges: 30 to 80, 150 to 200, and 350 to 450 PPB. After instrument warm-up, the station ozone analyzer's sample line was connected to the 7700P's gas outlet manifold and allowed to sample zero (ozone-free) air until a stable reading was obtained by the station analyzer. Following the zero, the 7700P was adjusted to produce the desired calibration gas concentrations, allowing amble time for the station analyzer to stabilize at each ozone concentration point. As with the other gaseous pollutants, analyzer accuracy was calculated by determining the difference between the known audit test gas concentrations and the observed analyzer response, expressed as percent difference and plotted by linear regression.

Continuous PM_{10} and $PM_{2.5}$ Particulate Monitors (BAMs): The station's continuous PM_{10} and $PM_{2.5}$ particulate monitors were audited by the same procedure. Both monitors utilize the beta attenuation method to measure atmospheric particulate levels and are referred to as BAMs. A constant and accurate sample flow rate is crucial to the operation of the BAM. To audit the BAM, the monitor's size-selective head was removed and replaced by an adaptor that allowed a frictionless piston-type primary flow meter (BIOS DC-Lite) to be attached to the monitor's inlet. The audit flow meter was allowed to measure the BAM's flow rate under ambient conditions until a stable, average flow rate was obtained. Three flow rate test points were used to assess flow rate accuracy. The percent difference between the known audit flow rates and the BAM's observed flow rate, as reported on the unit's LCD display, provided an assessment of the monitor's flow rate accuracy. Next, the BAM's design flow rate was evaluated by comparing the known flow rate against the BAM's target flow rate of 16.67 liters per minute (LPM). In addition to assessing the flow rate, a system leak check was performed according to the manufacturer's guidelines. Finally, the BAM's temperature and pressure sensors were checked against audit temperature and pressure instruments and any differences were noted.

3.0 SUMMARY OF PERFORMANCE AUDIT TESTS

Except for the CO analyzer, all of the gaseous pollutant analyzers and particulate monitors operating at the Wainwright near-term station were operating within acceptable performance limits. The CO analyzer's response to the low concentration test point produced a 17.5 percent error, which is outside the ±15 percent tolerance limit.

Table 2 summarizes the QA performance audit pass/fail results for the instruments and parameters tested at the station. Refer to Appendix A for the complete audit report for each instrument.

Table 2

SUMMARY OF PERFORMANCE AUDIT PASS / FAIL RESULTS

Audited Parameter	Audit Limit Category	Pass / Fail
Sulfur Dioxide (SO_2)	≤15% absolute error per audit test point	PASS
Carbon Monoxide (CO)	≤15% absolute error per audit test point	**FAIL**
Nitric Oxide (NO)	≤15% absolute error per audit test point	PASS
Oxides of Nitrogen (NO_X)	≤15% absolute error per audit test point	PASS
Nitrogen Dioxide (NO_2)	≤15% absolute error per audit test point ≥96% converter efficiency	PASS PASS
Ozone (O_3)	≤15% absolute error per audit test point	PASS
Continuous PM_{10} (BAM)	±4% error sample flow rate accuracy ±5% error design flow rate accuracy	PASS PASS
Continuous $PM_{2.5}$ (BAM)	±4% error sample flow rate accuracy ±5% error design flow rate accuracy	PASS PASS

4.0 OBSERVATIONS AND RECOMMENDATIONS

The only problem noted this quarter was with the CO analyzer. It appears that the zero air response has drifted high, which caused the analyzer's response to the low concentration test point to be out of tolerance. The analyzer's response was within tolerance for the remaining audit test points. Recommend adjusting the analyzer's zero setting downward to improve data accuracy.

APPENDIX A

INSTRUMENT PERFORMANCE AUDIT REPORTS

- **SO_2 Analyzer**
- **CO Analyzer**
- **Oxides of Nitrogen Analyzer (NO)**
- **Oxides of Nitrogen Analyzer (NO_X)**
- **Oxides of Nitrogen Analyzer (NO_2)**
- **Ozone Analyzer**
- **Continuous PM_{10} Particulate**
- **Continuous $PM_{2.5}$ Particulate**

AMS TECH

SULFUR DIOXIDE ANALYZER [SO_2] AUDIT REPORT

PART A: ANCILLARY INFORMATION

Project: AECOM / ConocoPhillips **Audit Date:** 25 SEPT 2009 **Auditor:** D. JOHNSON
Site ID: WAINWRIGHT (Near-Term) **Start Time:** 1715 AST **Witness:** NONE
Location: WAINWRIGHT, AK **End Time:** 1755 AST

- ***STATION SULFUR DIOXIDE ANALYZER IDENTIFICATION and APPLICATION***

Make: TEI **Range:** 0-0.5 ppm **Last Calibrated:** 6/1/09
Model: 43C **Inlet Height, m:** ~5.5 **In-line Filter?:** YES
SN: 0436610008 **Sample Flow, cc/min:** 490

- ***AUDIT EQUIPMENT IDENTIFICATION and DESCRIPTION***

Item: MFC gas dilution system w/GPT ozone source **Certification Date:** 9/16/09
Make: ESC **Model:** 7700 P **SN:** 135

Item: Compressed gas cylinder w/SO2 @ 31.3 ppm **Cyl. Expiration:** 2/12/10
Make: SCOTT-MARRIN **Model:** Size 50 **SN:** JJ8689

PART B: SO_2 AUDIT TEST RESULTS

- ***KNOWN AUDIT INPUT vs. OBSERVED STATION RESPONSE***

	INPUT	DAS RESPONSE		
Audit Point	**$[SO_2]_{IN}$** ppb	DAS ppb	Error ppb	Error %
Zero	0	1	1	NA
1	37	34	-3	-8.1
2	139	135	-4	-2.9
3	440	423	-17	-3.9
	Mean Absolute Error⇒		6.3	5.0

- ***AUDITOR COMMENTS or OBSERVATIONS***

None

- ***AUDIT LINEAR REGRESSION CURVE RESULTS***

Audit input value = *x*
Observed response = *y*

Audit Curve⇒	Slope	Intercept	Cor.Coef.
	0.9614	0.188	1.0000

- ***AUDIT LIMIT CRITERIA and PASS/FAIL RESULTS***

Audit Limit Category	To PASS, the observed response must be....	Pass/Fail
Accuracy	≤ 15% absolute error per audit test point	PASS

AMS TECH

CARBON MONOXIDE ANALYZER [CO] AUDIT REPORT

PART A: ANCILLARY INFORMATION

Project: AECOM / ConocoPhillips **Audit Date:** 25 SEPT 2009 **Auditor:** D. JOHNSON
Site ID: WAINWRIGHT (Near-Term) **Start Time:** 1715 AST **Witness:** NONE
Location: WAINWRIGHT, AK **End Time:** 1755 AST

- ***STATION CARBON MONOXIDE ANALYZER IDENTIFICATION and APPLICATION***

Make: TEI **Range:** 0-50 ppm **Last Calibrated:** 6/1/09
Model: 48 **Inlet Height, m:** ~5.5 **In-line Filter?:** YES
SN: 48-29688-237 **Flow Rate, cc/min:** 1100

- ***AUDIT EQUIPMENT IDENTIFICATION and DESCRIPTION***

Item: MFC gas dilution system w/GPT ozone source **Certification Date:** 9/16/09
Make: ESC **Model:** 7700 P **SN:** 135

Item: Compressed gas cylinder w/CO @ 3100 ppm **Cyl. Expiration:** 2/12/10
Make: SCOTT-MARRIN **Model:** Size 50 **SN:** JJ8689

PART B: CO AUDIT TEST RESULTS

- ***KNOWN AUDIT INPUT vs. OBSERVED STATION RESPONSE***

Audit Test Point	INPUT $[CO]_{IN}$ ppm	DAS RESPONSE DAS ppm	Error ppm	Error %
Zero	0.00	1.05	1.05	NA
1	3.71	4.36	0.65	17.5
2	13.78	14.74	0.96	7.0
3	43.60	44.97	1.37	3.1
		Mean Absolute Error⇒	1.01	9.2

- ***AUDITOR COMMENTS or OBSERVATIONS***

None

- ***AUDIT LINEAR REGRESSION CURVE RESULTS***

Audit input value = *x*
Observed response = *y*

Audit Curve⇒	Slope	Intercept	Cor.Coef.
	1.0118	0.827	1.0000

- ***AUDIT LIMIT CRITERIA and PASS/FAIL RESULTS***

Audit Limit Category	To PASS, the observed response must be....	Pass/Fail
Accuracy	≤ 15% absolute error per audit test point	FAIL

AMS TECH

OXIDES OF NITROGEN ANALYZER [NO] AUDIT REPORT

PART A: ANCILLARY INFORMATION

Project: AECOM / ConocoPhillips **Audit Date:** 25 SEPT 2009 **Auditor:** D. JOHNSON
Site ID: WAINWRIGHT (Near-Term) **Start Time:** 1715 AST **Witness:** NONE
Location: WAINWRIGHT, AK **End Time:** 1755 AST

- ***STATION OXIDES OF NITROGEN ANALYZER IDENTIFICATION and APPLICATION***

Make: TEI **Range:** 0-500 ppb **Last Calibrated:** 6/1/09
Model: 42C **Inlet Height, m:** ~5.5 **In-line Filter?:** YES
SN: 42C-70181-365 **Sample Flow, cc/min:** 712

- ***AUDIT EQUIPMENT IDENTIFICATION and DESCRIPTION***

Item: MFC gas dilution system w/GPT ozone source **Certification Date:** 9/16/09
Make: ESC **Model:** 7700 P **SN:** 135

Item: Compressed gas cylinder w/NO @ 30.6 ppm **Cyl. Expiration:** 2/12/10
Make: SCOTT-MARRIN **Model:** Size 50 **SN:** JJ8689

PART B: NO AUDIT TEST RESULTS

- ***KNOWN AUDIT INPUT vs. OBSERVED STATION RESPONSE***

	INPUT	DAS RESPONSE		
Audit Point	**$[NO]_{IN}$** ppb	DAS ppb	Error ppb	Error %
Zero	0	1	1	NA
1	37	34	-3	-8.1
2	136	131	-5	-3.7
3	430	421	-9	-2.1
	Mean Absolute Error⇒		4.5	4.6

- ***AUDITOR COMMENTS or OBSERVATIONS***

None

- ***AUDIT LINEAR REGRESSION CURVE RESULTS***

Audit input value = *x*
Observed response = *y*

Audit Curve⇒	Slope	Intercept	Cor.Coef.
	0.9802	-1.022	1.0000

- ***AUDIT LIMIT CRITERIA and PASS/FAIL RESULTS***

Audit Limit Category	To PASS, the observed response must be....	Pass/Fail
Accuracy	≤ 15% absolute error per audit test point	PASS

AMS TECH

OXIDES OF NITROGEN ANALYZER [NO_X] AUDIT REPORT

PART A: ANCILLARY INFORMATION

Project: AECOM / ConocoPhillips **Audit Date:** 25 SEPT 2009 **Auditor:** D. JOHNSON
Site ID: WAINWRIGHT (Near-Term) **Start Time:** 1715 AST **Witness:** NONE
Location: WAINWRIGHT, AK **End Time:** 1755 AST

- ***STATION OXIDES OF NITROGEN ANALYZER IDENTIFICATION and APPLICATION***

Make: TEI **Range:** 0-500 ppb **Last Calibrated:** 6/1/09
Model: 42C **Inlet Height, m:** ~5.5 **In-line Filter?:** YES
SN: 42C-70181-365 **Sample Flow, cc/min:** 712

- ***AUDIT EQUIPMENT IDENTIFICATION and DESCRIPTION***

Item: MFC gas dilution system w/GPT ozone source **Certification Date:** 9/16/09
Make: ESC **Model:** 7700 P **SN:** 135

Item: Compressed gas cylinder w/NO @ 30.6 ppm **Expiration Date:** 2/12/10
Make: SCOTT-MARRIN **Model:** Size 50 **SN:** JJ8689

PART B: NO_X AUDIT TEST RESULTS

- ***KNOWN AUDIT INPUT vs. OBSERVED STATION RESPONSE***

	INPUT	DAS RESPONSE		
Audit Point	**$[NO_X]_{IN}$** ppb	DAS ppb	Error ppb	Error %
Zero	0	1	1	NA
1	37	33	-4	-10.8
2	136	131	-5	-3.7
3	430	420	-10	-2.3
	Mean Absolute Error⇒		5.0	5.6

- ***AUDITOR COMMENTS or OBSERVATIONS***

None

- ***AUDIT LINEAR REGRESSION CURVE RESULTS***

Audit input value = *x*
Observed response = *y*

Audit Curve⇒	Slope	Intercept	Cor.Coef.
	0.9788	-1.303	1.0000

- ***AUDIT LIMIT CRITERIA and PASS/FAIL RESULTS***

Audit Limit Category	To PASS, the observed response must be....	Pass/Fail
Accuracy	≤ 15% absolute error per audit test point	PASS

AMS TECH

OXIDES OF NITROGEN ANALYZER [NO_2] AUDIT REPORT

PART A: ANCILLARY INFORMATION

Project: AECOM / ConocoPhillips **Audit Date:** 25 SEPT 2009 **Auditor:** D. JOHNSON
Site ID: WAINWRIGHT (Near-Term) **Start Time:** 1800 AST **Witness:** NONE
Location: WAINWRIGHT, AK **End Time:** 1844 AST

- ***STATION OXIDES OF NITROGEN ANALYZER IDENTIFICATION and APPLICATION***

Make: TEI **Range:** 0-500 ppb **Last Calibrated:** 6/1/09
Model: 42C **Inlet Height, m:** ~5.5 **In-line Filter?:** YES
SN: 42C-70181-365 **Sample Flow, cc/min:** 712

- ***AUDIT EQUIPMENT IDENTIFICATION and DESCRIPTION***

Item: MFC gas dilution system w/GPT ozone source **Certification Date:** 9/16/09
Make: ESC **Model:** 7700 P **SN:** 135

Item: Compressed gas cylinder w/NO @ 30.6 ppm **Expiration Date:** 2/12/10
Make: SCOTT-MARRIN **Model:** Size 50 **SN:** JJ8689

PART B: NO_2 AUDIT TEST RESULTS

- ***KNOWN AUDIT INPUT vs. OBSERVED STATION RESPONSE***

	INPUT	DAS RESPONSE		
Audit Point	**$[NO_2]_{IN}$** ppb	DAS ppb	Error ppb	Error %
Zero	0	0	0	NA
1	29	25	-4	-13.8
2	185	177	-8	-4.3
3	394	386	-8	-2.0
	Mean Absolute Error⇒		5.0	6.7

- ***AUDITOR COMMENTS or OBSERVATIONS***

Converter Efficiency = 99.9 percent. Converter is OK.

- ***AUDIT LINEAR REGRESSION CURVE RESULTS***

Audit input value = *x*
Observed response = *y*

Audit Curve⇒	Slope	Intercept	Cor.Coef.
	0.9826	-2.348	0.9999

- ***AUDIT LIMIT CRITERIA and PASS/FAIL RESULTS***

Audit Limit Category	To PASS, the observed response must be....	Pass/Fail
Accuracy	≤ 15% absolute error per audit test point	PASS
Converter Efficiency	≥ 96.0%	PASS

AMS TECH

OZONE ANALYZER AUDIT REPORT

PART A: ANCILLARY INFORMATION

Project: AECOM / ConocoPhillips **Audit Date:** 25 SEPT 2009 **Auditor:** D. JOHNSON
Site ID: WAINWRIGHT (Near-Term) **Start Time:** 1845 AST **Witness:** NONE
Location: WAINWRIGHT, AK **End Time:** 1935 AST

- ***STATION OZONE ANALYZER IDENTIFICATION and APPLICATION***

Make: TEI **Range:** 0-500 ppb **Last Calibrated:** 6/1/09
Model: 49C **Inlet Height, m:** ~5.5 **In-line Filter?:** YES
SN: 0431009062 **Flow A, cc/min:** 689 **Flow B, cc/min:** 688
Intensity A: 111567 **Intensity B:** 98670
O3 Coefficient: 1.213 **O3 BKG, ppb:** 0.4

- ***AUDIT EQUIPMENT IDENTIFICATION and DESCRIPTION***

Item: Certified ozone transfer standard **Certification Date:** 5/20/09
Make: ESC **Model:** 7700 P **SN:** 135

PART B: OZONE AUDIT TEST RESULTS

- ***KNOWN AUDIT INPUT vs. OBSERVED STATION RESPONSE***

	INPUT	DAS RESPONSE		
Audit Point	**$[O_3]_{IN}$** ppb	DAS ppb	Error ppb	Error %
Zero	0	0	0	NA
1	185	186	1	0.5
2	251	253	2	0.8
3	394	405	11	2.8
	Mean Absolute Error⇒		3.5	1.4

- ***AUDITOR COMMENTS or OBSERVATIONS***

None

- ***AUDIT LINEAR REGRESSION CURVE RESULTS***

Audit input value = *x*
Observed response = *y*

Audit Curve⇒	Slope	Intercept	Cor.Coef.
	1.0264	-1.972	0.9999

- ***AUDIT LIMIT CRITERIA and PASS/FAIL RESULTS***

Audit Limit Category	To PASS, the observed response must be....	Pass/Fail
Accuracy	≤ 15% absolute error per audit test point	PASS

AMS TECH

CONTINUOUS PM_{10} PARTICULATE MONITOR AUDIT REPORT

Beta Attenuation Monitor (BAM)

PART A: ANCILLARY INFORMATION

Project: AECOM / ConocoPhillips **Audit Date:** 25 SEPT 2009 **Auditor:** D. JOHNSON
Site ID: WAINWRIGHT (Near-Term) **Start Time:** 1855 AST **Witness:** NONE
Location: WAINWRIGHT, AK **End Time:** 1940 AST

- ***STATION BAM ANALYZER IDENTIFICATION***

Make: MET ONE **Range:** ≤10 µ **Last Calibrated:** 6/1/09
Model: BAM 1020 **Inlet Height, m:** ~5.5
SN: H11210

- ***AUDIT EQUIPMENT IDENTIFICATION and DESCRIPTION***

Item: Frictionless piston primary standard flow meter.
Make: BGI **Model:** tetraCal **SN:** 000630

PART B: AUDIT TEST RESULTS

- ***MONITOR OPERATIONAL CHECKS***

Check Item	Actual	BAM	Diff.	Std.	OK?
Temp.,°C ⇨	-0.4	0.0	0.4	±2.0 °C	OK
Bp.,mmHg ⇨	758	759	1	±10 mm	OK
Leak Check, LPM ⇨	---	0.3	---	±1.0 LPM	OK

- ***MONITOR FLOW RATE AUDIT***

	AUDIT	FLOW RATE ACCURACY			DESIGN FLOW TEST			
	Known Flow LPM	Indicated Flow LPM	Flow Error LPM	Percent Error %	Target Flow LPM	Known Flow LPM	Flow Error LPM	Percent Error %
Design Flow	15.4	15.1	-0.3	-1.9				
Rate Point ⇨	**17.1**	**16.7**	**-0.4**	**-2.3**	**16.7**	**17.1**	**0.4**	**2.4**
	18.9	18.3	-0.6	-3.2				

- ***AUDITOR COMMENTS***

None

- ***AUDIT LIMIT CRITERIA and PASS/FAIL RESULTS***

Audit Limit Category	To PASS, the observed response must be....	Pass/Fail
Flow Rate Accuracy	± 4% of audit standard at each test point	PASS
Design Flow Test	± 5% of design flow rate test point	PASS

AMS TECH

CONTINUOUS $PM_{2.5}$ PARTICULATE MONITOR AUDIT REPORT

Beta Attenuation Monitor (BAM)

PART A: ANCILLARY INFORMATION

Project: AECOM / ConocoPhillips **Audit Date:** 25 SEPT 2009 **Auditor:** D. JOHNSON
Site ID: WAINWRIGHT (Near-Term) **Start Time:** 1930 AST **Witness:** NONE
Location: WAINWRIGHT, AK **End Time:** 1950 AST

- ***STATION BAM ANALYZER IDENTIFICATION***

Make: MET ONE **Range:** ≤2.5 µ **Last Calibrated:** 6/1/09
Model: BAM 1020 **Inlet Height, m:** ~5.5
SN: H8581

- ***AUDIT EQUIPMENT IDENTIFICATION and DESCRIPTION***

Item: Frictionless piston primary standard flow meter.
Make: BGI **Model:** tetraCal **SN:** 000630

PART B: AUDIT TEST RESULTS

- ***MONITOR OPERATIONAL CHECKS***

Check Item	Actual	BAM	Diff.	Std.	OK?
Temp.,°C ⇨	-0.8	-0.6	0.2	±2.0 °C	OK
Bp.,mmHg ⇨	758	758	0	±10 mm	OK
Leak Check, LPM ⇨	---	0.4	---	±1.0 LPM	OK

- ***MONITOR FLOW RATE AUDIT***

	AUDIT	FLOW RATE ACCURACY			DESIGN FLOW TEST			
	Known Flow LPM	Indicated Flow LPM	Flow Error LPM	Percent Error %	Target Flow LPM	Known Flow LPM	Flow Error LPM	Percent Error %
Design Flow	15.1	15.0	-0.1	-0.7				
Rate Point ⇨	**16.7**	**16.7**	**0.0**	**0.0**	**16.7**	**16.7**	**0.00**	**0.0**
	18.4	18.4	0.0	0.0				

- ***AUDITOR COMMENTS***

None

- ***AUDIT LIMIT CRITERIA and PASS/FAIL RESULTS***

Audit Limit Category	To PASS, the observed response must be....	Pass/Fail
Flow Rate Accuracy	± 4% of audit standard at each test point	PASS
Design Flow Test	± 5% of design flow rate test point	PASS

APPENDIX B

AUDIT EQUIPMENT CERTIFICATION DOCUMENTATION

- **Audit Gas Cylinder**
- **Gas Dilution System**
- **Ozone Transfer Standard**
- **tetraCal flow meter**
- **Barometer**
- **Thermometer**

SCOTT-MARRIN, INC.
6531 BOX SPRINGS BLVD. • RIVERSIDE, CA 92507
TELEPHONE (951) 653-6780 • FAX (951) 653-2430

Report Of Analysis
EPA Protocol Gas Mixtures

ERTI02
TO: ENSR Consulting & Engineering
Attn: Henry Sofai
1601 Prospect Parkway
Fort Collins, CO 80525
(970) 493-8878 x130

REPORT NO: 53196-02
REPORT DATE: February 14, 2008
CUSTOMER PO NO: 2058642

CYLINDER NUMBER: **JJ8689** CYLINDER SIZE: 50A (39 std cu ft) CYLINDER PRESSURE: 1500 psig

COMPONENT	CONCENTRATION (v/v)	REFERENCE STANDARD	ANALYZER MAKE, MODEL, S/N, DETECTION	EXPIRATION DATE	REPLICATE ANALYSIS DATA
Carbon monoxide	3100 ± 31 ppm	GMIS CYLINDER #: CC20108 @ 5130 ppmv	Carle Insts Model 8000 Serial # 8249 Methanation/FID Gas Chromatography LAST CAL DATE: 1/28/2008	2/12/2010	2/12/2008 3130 ppm 3110 ppm 3110 ppm MEAN: 3120 ppm
Nitric oxide NOx Nitrogen dioxide	30.6 ± 0.2 ppm 30.6 ppm < 0.2 ppm	GMIS CYLINDER #: CC28420 @ 50 ppmv	Monitor Labs Model 8440 Serial # 136 Continuous Chemiluminescence LAST CAL DATE: 1/14/2008	2/12/2010	2/12/2008 30.5 ppm 30.7 ppm 30.6 ppm MEAN: 30.6 ppm
Sulfur dioxide	31.3 ± 0.3 ppm	GMIS CYLINDER #: ALM003641 @ 26.22 ppmv	Bovar/W Res Model 922M Serial # 9228379-1 Continuous UV Photometry LAST CAL DATE: 1/31/2008	2/12/2010	2/12/2008 31.1 ppm 31.3 ppm 31.3 ppm MEAN: 31.2 ppm
O2-free Nitrogen	Balance				

ppm = umole/mole **% = mole-%**
The above analyses were performed in accordance with Procedure G1 of the EPA Traceability Protocol, Report Number EPA-600/R97/121, dated September 1997.
The above analyses are invalid if the cylinder pressure is less than 150 psig.

ANALYST: Mark Monson APPROVED:
M.J.Monson J.T.Marrin

The only liability of this company for gas which fails to comply with this analysis shall be replacement or reanalysis thereof by the company without extra cost.

GAS DILUTION SYSTEM FLOW METER CALIBRATION

PART A: ANCILLARY INFORMATION

Location: BOULDER, CO **Date:** 16 SEPT 2009 **Tech:** D. JOHNSON

- ***GAS DILUTION SYSTEM IDENTIFICATION***

Make: ESC **Flow Control Type:** MASS **Last Calibrated:** 17 JULY 2009
Model: 7700P **Gas Range, cc/min:** 0.0 - 100
SN: 135 **Air Range, L/min:** 0.0 - 10.0

- ***FLOW CALIBRATION EQUIPMENT IDENTIFICATION and DESCRIPTION***

Item: Soap film-type flow meter (NIST-traceable primary standard)
Make: GILIAN **Model:** GILIBRATOR **Cell #1 SN:** 12776-L
Cell #2 SN: 12603-H

- ***AMBIENT CONDITIONS AT TIME OF CALIBRATION***

B. Press: 631.0 mmHg **Rel. Humidity:** <50 % RH **VP H_2O:** 19.349 mmHg
Air Temp: 21.6 deg C **STP Factor:** 0.8141 @25 C

PART B: FLOW METER CALIBRATION RESULTS

- ***GAS FLOW METER RESPONSE***

Calib. Test Point	System Thumb Wheel	(y) System LED Display	Raw Flow cc/min	(x) Corrected Flow scc/min	(x') Y_{cal} Flow scc/min	D_1 Diff %
1	200	0.92	26.84	21.850	21.65	0.92
2	300	1.44	40.44	32.921	33.04	-0.36
3	400	1.93	53.68	43.700	43.78	-0.18
4	500	2.42	66.96	54.511	54.52	-0.02
5	600	2.92	80.35	65.411	65.48	-0.11
6	700	3.42	93.79	76.353	76.44	-0.11
7	800	3.91	107.30	87.351	87.18	0.20

- ***LINEAR REGRESSION CURVE RESULTS***

Current	Slope	Intercept	Cor.Coef.
Curve⇒	0.0456	-0.068	1.0000

Previous	Slope	Intercept	Cor.Coef.
Curve⇒	0.0460	-0.074	1.0000

- ***AIR FLOW METER RESPONSE***

Calib. Test Point	System Thumb Wheel	(y) System LED Display	Raw Flow L/min	(x) Corrected Flow sL/min	(x') Y_{cal} Flow sL/min	D_1 Diff %
1	200	0.92	3.853	3.137	3.21	-2.27
2	300	1.44	5.711	4.649	4.66	-0.24
3	400	1.94	7.494	6.101	6.05	0.84
4	500	2.43	9.193	7.484	7.41	1.00
5	600	2.92	10.860	8.841	8.78	0.69
6	700	3.42	12.500	10.176	10.17	0.06
7	800	3.92	14.070	11.454	11.56	-0.92

- ***LINEAR REGRESSION CURVE RESULTS***

Current	Slope	Intercept	Cor.Coef.
Curve⇒	0.3596	-0.236	0.9997

Previous	Slope	Intercept	Cor.Coef.
Curve⇒	0.3611	-0.237	0.9997

AMSTECH

OZONE TRANSFER STANDARD CERTIFICATION

	Test Date	16-Sep-09	17-Jul-09	20-May-09	29-Apr-09	27-Feb-09	17-Jan-09
PRIMARY STANDARD: DASIBI 1008 PC SN: 3868							
	Span Number	30.804	30.804	30.804	30.804	30.804	30.804
	Zero Offset	4	4	4	4	4	4
	Sample Freq. (40-48)	47.441	47.080	47.610	47.545	47.773	47.882
	Control Freq. (50.0)	50.000	50.000	50.000	50.000	50.000	50.000
	Ozone Loss Factor	0.982	0.982	0.982	0.982	0.982	0.982
TRANSFER STANDARD: ESC 7700P SN: 135							
	Current Temperature, °C	22.6	22.4	21.0	20.9	20.4	19.8
	Current Temperature, °K	295.8	295.6	294.2	294.1	293.6	293.0
	Current Pressure, mmHg	623.6	634.0	633.0	630.6	629.6	631.2
	Dilution Flow Rate, LPM	7.484	7.513	7.588	7.480	6.323	6.323
POINT	**INSTRUMENT**	**NET RESPONSE, PPB**					
1	Primary Std.	9	9	10	10	9	9
(Zero)	Transfer Std.	0	0	0	0	0	0
2	Primary Std.	448	450	452	449	451	450
	Transfer Std.	440	440	442	443	445	446
3	Primary Std.	346	348	348	345	345	345
	Transfer Std.	341	342	343	341	342	344
4	Primary Std.	247	250	250	252	251	249
	Transfer Std.	241	239	240	238	239	240
5	Primary Std.	147	151	150	150	151	150
	Transfer Std.	144	146	147	145	146	145
6	Primary Std.	46	50	50	49	50	50
	Transfer Std.	45	48	47	46	48	49
Where:	Slope, m	0.9950	0.9915	0.9943	1.0013	1.0004	1.0054
x = PS	Intercept, b	-4.303	-5.381	-5.631	-7.265	-6.255	-5.955
y = TS	Corr. Coeff., r	0.9999	0.9998	0.9998	0.9997	0.9998	0.9998

Certification	**Current**	Previous	Δ %
Slope, m ⇒	**0.9980**	0.9984	-0.04%
Intercept, b ⇒	**-5.798**	-5.970	NA

Standard Deviations	
S_m, % =	0.52
S_b =	98.42

Qualification Standards: $S_m \leq 3.7\%$ AND, $S_b \leq 1{,}500$ AND, current slope = previous slope ±5%

Test Date: 16-Sep-09 **Tech:** DLJ **Pass? / Fail?:** **PASS**

BGI INCORPORATED 58 GUINAN STREET WALTHAM, MA 02451
NIST Traceable Calibration Facility, ISO 9001:2008 Registered

tetraCal

CERTIFICATE OF CALIBRATION - NIST TRACABILITY

(Refer to instruction manual for further details of calibration)

tetraCal Serial Number: 000630 DATE 25-JUN-09

Calibration Operator: Viola Kwong

Critical Venturi Flow Meter: Max Uncertainty = 0.346%
Serial Number: 1 *CEESI NVLAP NIST Data File 01BGI002*
Serial Number: 2 *CEESI NVLAP NIST Data File 01BGI003*
Serial Number: 3 *CEESI NVLAP NIST Data File 01BGI004*

Room Temperature : Uncertainty = 0.071% Room Temperature: 23.3 C
Brand: *Ertco* Serial Number: 9216
NIST Traceability No. 516837
tetraCal:
Ambient Temperature (set): 23.3 C
Aux (filter) Temperature (set): 23.3C

Barometric Pressure and Absolute Pressure
Vaisala Model PTB330(50-1100) Digital Accuracy: 0.018%
S/N C4310002
NIST Traceable (Princo Primary Standard Model 453 S/N W12537) Certificate No. P-7485
tetraCal:
Barometric Pressure (set): **754** mm of Hg

Results of Venturi Calibration

Flow Rate (Q) vs. Pressure Drop (ΔP). Where: Q=Lpm, ΔP= Cm of H_2O

No. 1 Q= 6.68298 ΔP ^ 0.51103
No. 2 Q= 1.21383 ΔP ^ 0.52323
No. 3 Q= 0.21418 ΔP ^ 0.53908

Overall Uncertainty: 0.35%

Date Placed In Service 9/9/09
(To be filled in by operator upon receipt)

Recommended Recalibration Date 9/8/10
(12 months from date placed in service)

Revised: June 2008

MICRO PRECISION CALIBRATION INC.

MICRO PRECISION CALIBRATION
21331 ADAMSON DRIVE
GRASS VALLEY CA 95949
530-268-1860

Certificate of Calibration

Date: 7/15/2009

Certificate #: 661586

Customer:
AIR MONITORING SERVICES AND TECHNOLOGY LLC
7321 POSTON WAY
BOULDER, CO, 80301

		Purchase Order:	CREDIT CARD
		Work Order:	53515
MPC Control #:	AX9083	Serial Number:	0J1498
Asset ID:	N/A	Department:	N/A
Gage Type:	BAROMETER/ALTIMETER	Performed By:	ROBERT SWINK
Manufacturer:	AIR INC.	Received Condition:	IN TOLERANCE
Model Number:	AIR-HB-1A	Returned Condition:	IN TOLERANCE
Size:	600-1100MB	Cal Date:	July 14, 2009
Temp./RH:	72 °F / 30 %	Cal. Interval:	12 MONTHS
		Cal. Due Date:	July 14, 2010

Found conditions meet or exceed manufacturer specifications.

***Calibration Notes:**

Standards Used To Calibrate Equipment

I.D.	Description	Model	Serial	Manufacturer	Cal. Due Date	Traceability #
AW4419	MULTI-FUNCTION PRESSURE INDICATOR	DPI 145	14501283	DRUCK	3/2/2010	567299

Procedures Used In This Event:

Procedure Name	Description
MANUFACTURER	MANUAL REV CONTROL

Calibrating Technician: ROBERT SWINK

QC Approval: YSMAEL GONZALES

Unless Otherwise Noted, Uncertainty Estimated at >= 4 to 1. Uncertainties have been estimated at a 95 percent confidence level (k=2). Services rendered comply with ISO 17025:2005, ISO 9001:2000, ANSI/NCSL Z540-1, MPC Quality Manual, MPC CSD and with customer purchase order instructions.

Calibration cycles and resulting due dates were submitted/approved by the customer. Any number of factors may cause an instrument to drift out of tolerance before the next scheduled calibration. Recalibration cycles should be based on frequency of use, environmental conditions and customer's established systematic accuracy. The information on this report, pertains only to the instrument identified.

All standards are traceable to the National Institute of Standards and Technology (NIST). Services rendered include proper manufacture's service instructions and are warranted for no less than (30) days. This report may not be reproduced in part or in whole without the prior written approval of the issuing MPC lab.

(CERT Rev 0)

THERMOMETER
CERTIFICATE OF CALIBRATION

Tested for: *AMSTech, LLC*

Certified by: *AMSTech, LLC*
7321 Poston Way
Boulder, CO 80301-6403

THERMOMETER IDENTIFICATION

Make: YSI
Model: 4600 (series 400 probe)
Serial No.: 101290 (base)
99B0447-403 (probe)

Type: Digital RTD
Range: -40.00 to +150.00 °C
Resolution: 0.01 °C

THERMOMETER CALIBRATION RESULTS

Calorimeter °C	Thermometer °C	Difference °C
0.03	0.05	+0.02
7.53	7.55	+0.02
13.95	13.97	+0.02
17.80	17.80	0.00
20.85	20.87	+0.02
25.71	25.72	+0.01
29.40	29.41	+0.01
34.61	34.59	-0.02
38.70	38.68	-0.02
42.45	42.42	-0.03
49.30	49.24	-0.06

Slope: 0.9985 **Intercept:** 0.039 **Corr. Coeff:** 1.0000

Test Performed by: David L. Johnson **Date:** 7/21/09

David L. Johnson

The thermometer identified above was tested against a set of NIST-traceable, mercury-in-glass calorimeters manufactured by the Brooklyn Thermometer Company, Inc. The calorimeters have a resolution of 1/100 of a degree Celsius. The calibration was performed using gently agitated, thermally homogeneous water baths and immersion times of 20 minutes or greater per test point. To make temperature corrections during use of this thermometer, subtract the temperature difference reported for an individual test point, or apply the slope and intercept values by the equation, °C corrected = (°C observed - intercept) ÷ slope.

Appendix D

Monthly Data Summaries

Wainwright Near-Term Air Quality Monitoring Program - Wainwright, Alaska
AUGUST 2009

10-M HORZ WS - M/S

HOURS (LST)

HR-BEG	00	01	02	03	04	05	06	07	08	09	10	11	12	13	14	15	16	17	18	19	20	21	22	23			
HR-END	01	02	03	04	05	06	07	08	09	10	11	12	13	14	15	16	17	18	19	20	21	22	23	24			
DAY																									AVG/	MAX/	MIN
1	3.	3.	2.	1.	3.	3.	3.	11.	6.	7.	7.	5.	3.	4.	1.	3.	3.	4.	3.	2.	2.	2.	3.	3.	4.	11.	1.
2	3.	3.	4.	4.	4.	6.	5.	6.	5.	6.	9.	7.	6.	6.	8.	6.	6.	6.	3.	3.	3.	4.	7.	6.	5.	9.	3.
3	6.	5.	7.	6.	6.	4.	5.	4.	4.	4.	5.	4.	4.	4.	4.	3.	2.	3.	1.	2.	2.	2.	2.	3.	4.	7.	1.
4	2.	3.	3.	3.	3.	3.	3.	1.	1.	1.	2.	3.	1.	1.	2.	3.	4.	4.	4.	4.	3.	1.	3.	3.	3.	4.	1.
5	3.	4.	3.	2.	3.	3.	3.	2.	3.	4.	4.	6.	7.	6.	7.	7.	9.	8.	9.	8.	8.	8.	8.	7.	6.	9.	2.
6	6.	7.	5.	5.	8.	7.	7.	7.	7.	8.	8.	9.	7.	7.	8.	7.	7.	7.	7.	4.	5.	4.	5.	6.	7.	9.	4.
7	6.	6.	7.	5.	5.	5.	4.	4.	3.	3.	4.	4.	6.	6.	5.	5.	5.	7.	7.	6.	6.	5.	6.	5.	5.	7.	3.
8	5.	4.	5.	4.	4.	4.	4.	4.	4.	4.	4.	5.	7.	7.	6.	6.	6.	7.	7.	6.	6.	8.	6.	9.	6.	9.	4.
9	9.	9.	8.	9.	9.	9.	11.	10.	11.	13.	10.	10.	8.	7.	7.	7.	6.	6.	7.	5.	5.	4.	4.	3.	8.	13.	3.
10	4.	3.	4.	3.	3.	1.	2.	1.	3.	1.	3.	3.	3.	5.	4.	4.	4.	3.	3.	3.	3.	4.	3.	4.	3.	5.	1.
11	3.	3.	2.	2.	3.	3.	4.	3.	4.	4.	4.	4.	5.	4.	3.	5.	5.	5.	4.	4.	4.	4.	4.	3.	4.	5.	2.
12	4.	4.	4.	3.	3.	3.	4.	4.	4.	6.	4.	5.	4.	4.	6.	4.	7.	7.	6.	6.	6.	5.	4.	5.	5.	7.	3.
13	4.	4.	4.	4.	3.	4.	4.	4.	5.	5.	6.	6.	6.	5.	6.	5.	4.	4.	4.	4.	4.	2.	2.	1.	4.	6.	1.
14	2.	2.	2.	3.	3.	3.	4.	4.	4.	4.	5.	6.	7.	8.	8.	9.	9.	9.	10.	10.	9.	9.	7.	7.	6.	10.	2.
15	8.	8.	7.	7.	8.	9.	7.	9.	9.	8.	8.	8.	8.	7.	6.	7.	7.	7.	6.	6.	6.	4.	5.	5.	7.	9.	4.
16	4.	3.	3.	4.	3.	3.	4.	4.	3.	5.	6.	7.	8.	7.	7.	8.	8.	6.	6.	6.	6.	5.	5.	4.	5.	8.	3.
17	6.	5.	4.	4.	4.	4.	5.	7.	7.	6.	7.	6.	4.	4.	4.	7.	5.	7.	6.	4.	7.	6.	6.	8.	6.	8.	4.
18	7.	6.	9.	6.	7.	8.	10.	9.	10.	9.	9.	9.	12.	9.	9.	9.	9.	7.	7.	11.	9.	10.	9.	8.	9.	12.	6.
19	9.	9.	8.	6.	8.	7.	7.	6.	8.	6.	7.	7.	7.	6.	6.	6.	5.	4.	3.	2.	2.	2.	2.	3.	6.	9.	2.
20	3.	3.	4.	5.	6.	5.	4.	4.	4.	4.	6.	6.	4.	4.	4.	3.	4.	4.	5.	4.	4.	2.	4.	4.	4.	6.	2.
21	4.	3.	3.	4.	3.	4.	4.	4.	3.	3.	6.	4.	2.	2.	2.	2.	2.	4.	4.	4.	4.	4.	7.	9.	4.	9.	2.
22	7.	4.	4.	3.	3.	3.	3.	3.	3.	3.	3.	4.	5.	4.	3.	3.	2.	3.	3.	3.	4.	8.	8.	9.	4.	9.	2.
23	7.	7.	5.	4.	2.	4.	3.	3.	3.	4.	4.	4.	3.	3.	3.	1.	4.	6.	7.	7.	7.	8.	7.	7.	5.	8.	1.
24	8.	7.	7.	6.	4.	4.	4.	3.	3.	3.	4.	3.	3.	4.	4.	4.	4.	3.	3.	3.	3.	3.	3.	1.	4.	8.	1.
25	2.	2.	1.	2.	2.	2.	2.	1.	3.	3.	3.	3.	3.	2.	4.	4.	4.	4.	4.	5.	4.	3.	4.	4.	3.	5.	1.
26	2.	4.	4.	4.	4.	5.	4.	6.	5.	5.	5.	4.	4.	4.	4.	4.	4.	5.	6.	6.	5.	4.	4.	4.	4.	6.	2.
27	4.	4.	4.	4.	6.	6.	5.	6.	4.	5.	5.	4.	4.	4.	3.	7.	4.	2.	3.	4.	4.	3.	4.	4.	4.	7.	2.
28	3.	1.	3.	5.	5.	7.	6.	4.	4.	6.	5.	6.	6.	4.	4.	4.	5.	4.	4.	2.	2.	2.	2.	2.	4.	7.	1.
29	1.	2.	2.	4.	5.	6.	8.	7.	7.	9.	8.	10.	8.	8.	6.	7.	6.	6.	7.	8.	7.	7.	6.	6.	6.	10.	1.
30	7.	6.	4.	2.	1.	1.	1.	2.	3.	3.	3.	3.	7.	7.	8.	9.	10.	10.	11.	11.	11.	11.	12.	14.	7.	14.	1.
31	13.	13.	13.	13.	13.	12.	11.	10.	9.	8.	7.	6.	6.	4.	2.	3.	1.	3.	4.	6.	6.	7.	8.	9.	8.	13.	1.
AVG	5.	5.	5.	4.	5.	5.	5.	5.	5.	5.	6.	6.	5.	5.	5.	5.	5.	5.	5.	5.	5.	5.	5.	5.	5.		
MAX	13.	13.	13.	13.	13.	12.	11.	11.	11.	13.	10.	10.	12.	9.	9.	9.	10.	10.	11.	11.	11.	11.	12.	14.		14.	
MIN	1.	1.	1.	1.	1.	1.	1.	1.	1.	1.	2.	3.	1.	1.	1.	1.	1.	2.	1.	2.	2.	1.	2.	1.			1.

TOTAL HOURS = 744 NUMBER OF GOOD HOURS = 744 NUMBER OF MISSING HOURS = 0 DATA CAPTURE = 100.00 (PERCENT)

10-M HORZ WS M/S		DATE (DAY,HOUR)	
MONTHLY AVERAGE	5.		
MONTHLY MAXIMUM	14.	30	24
MONTHLY MINIMUM	1.	1	4

Wainwright Near-Term Air Quality Monitoring Program - Wainwright, Alaska
AUGUST 2009

10-M WIND DIRECTION - DEGREES

HOURS (LST)

HR-BEG	00	01	02	03	04	05	06	07	08	09	10	11	12	13	14	15	16	17	18	19	20	21	22	23
HR-END	01	02	03	04	05	06	07	08	09	10	11	12	13	14	15	16	17	18	19	20	21	22	23	24
DAY																								
1	258	185	113	40	10	60	140	220	220	200	220	230	250	240	290	320	270	260	260	270	220	170	120	70
2	90	110	180	170	140	150	160	160	170	160	170	180	180	190	180	180	180	180	280	200	120	150	160	160
3	160	160	170	170	170	180	180	190	180	190	210	250	270	260	280	290	270	290	310	217	123	30	20	60
4	50	70	80	70	80	90	120	300	330	160	300	320	340	310	330	320	330	10	360	10	340	20	350	350
5	340	330	340	360	340	320	360	340	340	350	360	10	20	10	30	20	30	40	40	40	60	60	60	60
6	60	60	60	70	80	80	90	80	80	90	100	100	90	120	100	110	120	100	100	110	100	90	110	110
7	120	120	120	130	140	150	170	210	200	210	210	210	210	230	230	230	230	230	230	230	250	250	270	280
8	290	300	300	300	320	320	330	320	330	330	330	340	340	340	320	320	310	300	300	290	280	270	270	280
9	290	290	270	260	270	270	270	280	280	290	290	300	300	310	310	320	330	340	340	350	340	330	340	360
10	350	350	340	340	350	20	360	10	350	20	40	340	350	10	340	10	10	70	60	50	40	40	60	60
11	60	70	90	80	70	70	80	90	100	130	70	100	80	90	100	90	110	100	90	70	70	60	60	60
12	70	70	60	50	40	60	80	70	80	80	60	70	70	50	40	40	20	30	30	30	60	40	30	30
13	20	20	20	40	50	30	40	40	20	20	20	10	10	20	20	20	20	10	10	20	30	40	55	70
14	100	130	160	190	210	200	210	210	250	230	220	220	220	220	220	230	220	230	240	240	250	280	300	310
15	300	300	300	300	300	300	300	300	290	300	310	300	300	300	300	310	310	310	310	310	310	310	300	290
16	290	290	270	280	260	250	250	250	230	230	210	210	220	220	230	230	230	260	320	320	320	310	310	300
17	300	290	280	270	260	240	200	200	200	200	200	220	260	220	210	220	220	230	290	260	250	250	260	240
18	260	260	270	260	250	270	250	260	250	250	270	260	270	250	260	260	260	250	260	250	250	230	250	230
19	220	270	250	260	250	240	240	260	250	270	250	260	260	250	250	280	260	290	280	290	240	190	140	150
20	190	220	190	190	180	170	150	140	130	120	120	120	120	140	130	130	110	110	100	130	220	220	130	140
21	160	150	170	200	180	180	180	180	180	130	130	230	220	255	290	325	360	30	50	60	80	90	140	150
22	160	170	200	210	150	90	30	30	30	80	110	150	160	170	160	220	290	290	140	140	140	180	250	260
23	270	270	270	260	250	200	210	180	170	150	140	130	130	110	120	130	130	90	80	90	80	80	80	90
24	80	70	80	90	90	80	80	90	80	90	60	40	10	350	330	340	330	320	320	300	320	300	310	300
25	310	350	340	283	225	168	110	80	60	125	190	255	320	345	10	360	10	20	40	60	50	50	30	50
26	60	60	60	70	70	70	70	80	70	90	110	110	130	100	120	110	90	90	100	110	110	110	100	100
27	110	100	110	120	120	130	130	120	120	130	120	130	140	150	130	180	230	240	210	160	160	170	170	210
28	190	250	320	320	320	320	310	320	330	320	340	330	330	340	340	330	320	340	340	10	20	40	60	80
29	60	65	70	100	100	110	130	110	110	110	110	110	100	90	100	100	100	40	40	20	20	30	30	30
30	360	360	20	40	30	60	90	90	100	130	130	110	100	100	120	110	110	100	100	100	100	100	100	100
31	100	100	100	100	110	110	110	110	110	110	110	120	140	140	130	120	90	110	140	160	140	130	140	160

TOTAL HOURS = 744 NUMBER OF GOOD HOURS = 744 NUMBER OF MISSING HOURS = 0 DATA CAPTURE = 100.00 (PERCENT)

Wainwright Near-Term Air Quality Monitoring Program - Wainwright, Alaska
AUGUST 2009

10-M TEMPERATURE - DEGREES C

HOURS (LST)

HR-BEG	00	01	02	03	04	05	06	07	08	09	10	11	12	13	14	15	16	17	18	19	20	21	22	23			
HR-END	01	02	03	04	05	06	07	08	09	10	11	12	13	14	15	16	17	18	19	20	21	22	23	24			
DAY																									AVG/	MAX/	MIN
1	7.8	7.8	7.8	8.3	7.8	10.0	12.8	10.6	11.1	12.8	15.6	15.6	15.0	17.2	17.2	14.4	15.6	15.0	14.4	13.9	14.0	12.2	11.7	10.0	12.4	17.2	7.8
2	10.6	12.2	11.7	11.7	11.7	11.1	11.7	12.8	15.0	15.6	15.6	15.6	16.1	17.8	16.7	16.7	17.2	17.2	14.4	14.4	17.2	16.1	15.0	14.4	14.5	17.8	10.6
3	14.4	14.4	12.8	12.8	12.2	12.2	12.8	14.4	15.6	16.7	17.8	14.4	15.0	14.4	13.9	15.6	16.1	15.0	14.4	11.7	12.8	12.2	11.7	12.8	14.0	17.8	11.7
4	11.1	12.2	11.7	12.2	13.3	13.9	14.4	15.6	15.0	19.4	17.2	16.7	20.0	21.1	21.1	21.1	19.4	15.0	15.6	16.7	14.4	12.8	12.2	11.1	15.6	21.1	11.1
5	12.2	12.2	10.6	10.0	10.6	13.3	8.9	11.1	9.4	7.2	7.8	7.2	8.9	11.7	11.7	11.1	10.0	8.9	8.3	7.8	7.8	8.3	7.8	7.8	9.6	13.3	7.2
6	7.2	7.2	6.7	8.3	8.3	7.8	8.3	8.9	9.4	10.0	12.2	13.3	15.0	16.7	17.8	18.9	20.0	20.0	19.4	18.9	17.8	17.2	16.1	15.6	13.4	20.0	6.7
7	13.9	12.8	11.1	11.7	11.7	12.2	12.8	13.9	13.9	13.9	13.9	15.0	16.1	16.7	16.1	15.6	15.6	15.6	13.9	13.3	11.1	10.6	10.0	8.9	13.3	16.7	8.9
8	7.8	8.9	7.2	8.3	7.2	7.2	7.2	7.8	7.2	6.7	6.1	6.1	5.0	5.0	5.0	6.1	6.0	6.1	6.1	6.1	6.1	6.1	6.1	6.1	6.6	8.9	5.0
9	6.1	5.6	6.1	7.2	7.8	7.8	7.8	7.2	6.7	6.1	6.7	6.1	6.1	6.1	5.6	5.0	6.1	5.0	5.0	4.4	3.9	4.4	3.3	3.3	5.8	7.8	3.3
10	3.3	2.8	2.2	3.3	2.8	2.2	2.8	3.3	3.9	3.9	5.6	5.6	5.0	5.6	5.6	6.1	6.7	7.2	6.7	6.7	6.7	7.2	7.2	6.1	4.9	7.2	2.2
11	6.1	6.7	6.1	6.1	5.0	5.6	5.0	5.6	5.0	5.6	6.1	7.8	7.8	8.9	9.4	10.6	10.0	10.0	10.0	9.4	8.9	8.3	7.8	6.7	7.4	10.6	5.0
12	6.7	6.0	5.6	5.6	6.1	7.2	8.3	8.3	8.9	8.9	8.3	9.4	9.4	8.3	7.2	6.7	6.7	6.7	6.7	6.1	6.1	6.1	5.0	4.4	7.0	9.4	4.4
13	3.9	3.9	2.8	3.3	3.9	3.3	3.9	4.4	5.0	5.0	5.0	5.6	5.6	5.6	5.6	5.6	6.1	6.1	5.6	5.0	4.4	4.4	5.6	5.6	4.8	6.1	2.8
14	5.6	6.1	6.1	7.8	7.8	7.2	7.2	6.7	7.2	7.8	7.8	7.2	7.2	7.2	7.8	7.8	8.3	8.3	8.3	8.3	8.9	8.9	7.2	5.6	7.4	8.9	5.6
15	5.0	5.0	4.4	3.3	3.3	3.9	3.9	3.9	4.4	4.4	5.0	5.0	5.6	6.1	6.7	6.7	6.1	6.1	6.1	5.6	5.6	5.6	5.6	5.6	5.1	6.7	3.3
16	5.6	5.6	4.4	5.0	5.0	6.1	7.8	8.3	8.9	8.9	8.9	9.4	10.0	10.0	10.6	9.4	9.4	9.4	7.2	6.1	5.6	5.6	5.6	5.6	7.4	10.6	4.4
17	5.6	5.6	6.7	6.7	6.7	8.3	8.3	6.1	6.7	8.3	8.9	8.3	7.8	9.4	8.9	9.4	9.4	10.6	7.8	8.3	7.8	7.8	7.8	7.2	7.9	10.6	5.6
18	6.7	6.7	6.7	6.7	6.7	6.1	6.7	7.2	6.7	6.7	7.8	8.3	8.3	8.9	8.9	8.9	8.3	8.3	8.3	7.2	7.8	7.8	7.2	7.2	7.5	8.9	6.1
19	7.2	6.7	7.8	7.2	7.8	8.3	7.2	6.7	7.8	7.8	7.8	8.9	7.8	8.3	8.3	8.9	10.0	10.6	10.6	10.0	8.3	8.9	9.4	9.4	8.4	10.6	6.7
20	9.4	10.0	10.0	9.4	8.3	8.3	8.3	8.9	10.6	10.6	11.1	11.7	12.8	13.9	16.1	16.7	16.1	16.1	16.7	13.9	13.9	12.8	12.8	11.7	12.1	16.7	8.3
21	11.1	11.1	11.1	11.1	11.1	10.0	10.6	11.7	12.2	12.2	14.4	14.4	14.4	16.7	15.0	15.6	12.2	12.2	13.3	12.2	12.2	12.8	12.2	12.2	12.6	16.7	10.0
22	11.7	11.7	12.8	11.7	10.6	8.9	8.3	8.9	9.4	12.8	16.7	16.7	17.2	16.1	18.3	12.8	15.0	13.9	14.4	12.2	11.1	10.6	7.8	7.2	12.4	18.3	7.2
23	7.2	7.2	7.8	7.8	8.3	8.9	9.4	10.0	9.4	10.0	11.1	10.6	12.2	15.0	15.6	15.6	16.1	13.9	12.8	12.2	11.1	10.0	8.9	8.9	10.8	16.1	7.2
24	8.3	7.8	8.3	8.3	8.9	8.9	8.3	8.9	9.4	10.0	8.3	7.8	7.8	7.2	8.3	6.7	7.8	8.9	8.9	8.9	8.3	7.8	7.8	8.9	8.4	10.0	6.7
25	8.3	6.1	6.7	5.0	6.7	6.1	8.9	8.3	8.3	8.9	8.9	8.9	10.6	11.7	10.0	10.0	8.9	8.3	8.9	8.9	7.8	6.7	5.6	6.7	8.1	11.7	5.0
26	6.1	6.1	6.1	6.1	6.1	6.1	6.1	6.1	6.7	7.2	8.3	8.3	8.3	8.9	9.4	10.0	10.0	8.9	10.0	9.4	8.9	8.9	8.3	7.8	7.8	10.0	6.1
27	7.2	6.7	7.2	7.2	6.7	6.7	6.1	6.7	7.2	7.2	10.0	11.7	13.3	13.3	13.3	11.7	11.1	11.7	11.7	11.1	10.6	9.4	10.0	10.0	9.5	13.3	6.1
28	10.0	8.3	9.4	8.3	7.8	7.8	7.8	8.9	8.3	7.8	7.2	7.2	7.8	8.3	7.2	7.8	7.2	6.7	5.6	5.6	5.0	4.4	4.4	6.1	7.3	10.0	4.4
29	4.4	3.9	4.4	5.0	5.0	3.9	3.9	4.4	4.4	3.9	4.4	4.4	5.0	5.6	6.1	6.7	6.1	4.4	3.9	4.4	4.4	4.4	4.4	5.0	4.7	6.7	3.9
30	5.0	5.0	5.0	5.0	4.4	5.0	5.6	7.8	8.3	8.3	8.9	8.9	8.3	7.8	7.2	7.2	7.8	7.2	6.7	6.1	5.6	5.6	5.6	5.0	6.6	8.9	4.4
31	4.4	3.9	3.9	3.9	3.9	3.9	4.4	5.6	6.1	7.2	8.3	10.0	10.6	11.1	13.3	13.9	15.0	17.2	13.3	12.2	11.1	10.6	10.6	10.6	9.0	17.2	3.9
AVG	7.7	7.6	7.5	7.6	7.5	7.7	7.9	8.4	8.6	9.1	9.7	9.9	10.3	11.0	11.1	10.9	11.0	10.7	10.2	9.6	9.2	8.9	8.4	8.2	9.1		
MAX	14.4	14.4	12.8	12.8	13.3	13.9	14.4	15.6	15.6	19.4	17.8	16.7	20.0	21.1	21.1	21.1	20.0	20.0	19.4	18.9	17.8	17.2	16.1	15.6		21.1	
MIN	3.3	2.8	2.2	3.3	2.8	2.2	2.8	3.3	3.9	3.9	4.4	4.4	5.0	5.0	5.0	5.0	6.0	4.4	3.9	4.4	3.9	4.4	3.3	3.3			2.2

TOTAL HOURS = 744 NUMBER OF GOOD HOURS = 744 NUMBER OF MISSING HOURS = 0 DATA CAPTURE = 100.00 (PERCENT)

10-M TEMPERATURE DEGREES C		DATE (DAY,HOUR)	
MONTHLY AVERAGE	9.1		
MONTHLY MAXIMUM	21.1	4	14
MONTHLY MINIMUM	2.2	10	3

Wainwright Near-Term Air Quality Monitoring Program - Wainwright, Alaska
AUGUST 2009

NITROGEN OXIDES - PPM

HOURS (LST)

HR-BEG	00	01	02	03	04	05	06	07	08	09	10	11	12	13	14	15	16	17	18	19	20	21	22	23			
HR-END	01	02	03	04	05	06	07	08	09	10	11	12	13	14	15	16	17	18	19	20	21	22	23	24			
DAY																									AVG/	MAX/	MIN
1	0.000	0.016	0.007	0.000	0.017	0.002	0.000	0.001	0.000	0.002	0.000	0.000	0.000	0.000	0.001	0.003	0.001	0.001	0.001	0.001	0.004	0.003	0.001	0.000	0.003	0.017	0.000
2	0.000	0.000	0.000	0.000	0.000	0.000	0.000	0.000	0.000	0.000	0.000	0.000	0.000	0.000	0.000	0.000	0.000	0.000	0.001	0.001	0.000	0.000	0.000	0.000	0.000	0.001	0.000
3	0.000	0.000		0.000	0.000	0.000		0.000	0.001	0.001	0.001	0.000	0.001	0.000	0.000	0.002	0.002	0.002	0.001	0.002	0.000	0.000	0.000	0.000	0.001	0.002	0.000
4	0.000	0.000	0.000	0.000	0.000	0.000	0.000	0.001	0.005	0.002	0.003	0.001	0.001	0.005	0.001	0.001	0.001	0.007	0.038	0.005	0.022	0.018	0.001	0.000	0.005	0.038	0.000
5	0.000	0.000	0.000	0.001	0.003	0.002	0.004	0.006	0.004	0.001	0.013	0.017	0.002	0.006	0.003	0.000	0.001	0.000	0.001	0.000	0.000	0.000	0.000	0.000	0.003	0.017	0.000
6	0.000	0.000	0.000	0.000	0.000	0.000	0.000	0.000	0.001	0.001	0.000	0.000		0.000	0.000	0.000	0.001	0.001	0.000	0.001	0.000	0.000	0.000	0.000	0.000	0.001	0.000
7	0.000	0.000	0.000	0.000	0.000	0.001	0.001	0.000	0.001	0.002	0.000	0.000	0.000	0.000	0.000	0.000	0.001	0.000	0.000	0.000	0.000	0.000	0.000	0.001	0.000	0.002	0.000
8	0.001	0.002	0.002	0.001	0.000	0.000	0.000	0.000	0.000	0.000	0.000	0.000	0.000	0.008	0.000	0.001	0.001	0.001	0.002	0.001	0.002	0.000	0.001	0.000	0.001	0.008	0.000
9	0.000	0.001	0.000	0.000	0.000	0.000	0.000	0.000	0.001	0.001	0.001	0.000	0.000	0.000	0.000	0.000	0.000	0.000	0.000	0.000	0.000	0.000	0.000	0.006	0.000	0.006	0.000
10	0.002	0.001		0.004	0.000	0.004	0.002	0.001	0.005	0.003	0.003	0.003	0.003	0.015	0.012	0.008	0.011	0.011	0.000	0.000	0.000	0.000	0.000	0.000	0.004	0.015	0.000
11	0.000	0.000	0.000	0.000	0.000	0.000	0.000	0.000	0.002	0.000	0.000	0.000	0.001	0.000	0.000	0.000	0.000	0.000	0.010	0.014	0.001	0.000	0.000	0.008	0.002	0.014	0.000
12	0.000	0.000	0.000	0.000	0.000	0.000	0.000	0.000	0.001	0.000	0.000	0.000	0.001	0.001	0.000	0.000	0.001	0.000	0.000	0.000	0.001	0.000	0.002	0.001	0.000	0.002	0.000
13	0.000	0.000	0.000	0.000	0.000	0.000	0.000		0.001	0.000	0.001	0.000	0.001	0.000	0.000	0.000	0.000	0.000	0.002	0.001	0.000	0.000	0.000	0.002	0.000	0.002	0.000
14	0.002	0.001	0.001	0.002	0.002	0.001	0.001	0.001	0.001	0.000	0.000	0.000	0.000	0.001	0.000	0.000	0.000	0.000	0.000	0.000	0.000	0.000	0.001	0.000	0.001	0.002	0.000
15	0.000	0.000	0.000	0.000	0.000	0.001	0.001	0.000	0.001	0.001	0.001	0.001	0.001	0.001	0.001	0.002	0.000	0.000	0.000	0.001	0.000	0.001	0.001	0.001	0.001	0.002	0.000
16	0.001	0.002	0.001	0.001	0.000	0.000	0.000	0.000	0.000	0.001	0.000	0.000	0.000	0.000	0.000	0.000	0.000	0.000	0.000	0.000	0.000	0.000	0.000	0.001	0.000	0.002	0.000
17	0.001	0.001		0.001	0.000	0.000	0.000	0.000	0.001	0.001	0.005	0.000	0.000	0.004	0.000	0.000	0.000	0.001	0.000	0.000	0.000	0.000	0.000	0.000	0.001	0.005	0.000
18	0.000	0.000	0.000	0.000	0.000	0.000	0.000	0.000	0.001	0.001	0.000	0.000	0.000	0.000	0.001	0.000	0.000	0.000	0.000	0.000	0.000	0.000	0.000	0.000	0.000	0.001	0.000
19	0.000	0.000	0.000	0.000	0.000	0.000	0.000	0.000	0.001	0.001	0.000	0.000	0.000	0.000	0.000	0.000	0.001	0.002	0.001	0.001	0.000	0.015	0.001	0.000	0.001	0.015	0.000
20	0.000	0.001	0.000	0.001	0.000	0.000	0.000	0.000						0.000	0.000	0.000	0.000	0.000	0.000	0.000	0.000	0.000	0.000	0.000	0.000	0.001	0.000
21	0.000	0.000	0.000	0.000	0.005	0.000						0.000	0.001	0.000	0.005	0.004	0.006	0.000	0.000	0.002	0.001	0.000	0.000	0.000	0.001	0.006	0.000
22	0.000	0.000	0.000	0.000	0.003	0.000	0.000	0.000	0.000	0.000	0.000	0.000	0.000	0.000	0.000	0.000	0.001	0.001	0.001	0.000	0.002	0.001	0.000	0.000	0.000	0.003	0.000
23	0.000	0.000	0.000	0.000	0.000	0.001	0.000						0.000	0.000	0.001	0.000	0.001	0.001	0.000	0.000	0.000	0.000	0.000	0.000	0.000	0.001	0.000
24	0.000	0.000		0.000	0.000	0.000	0.000	0.000	0.001	0.001	0.000	0.000	0.004	0.009	0.002	0.001	0.001	0.002	0.001	0.001	0.002	0.000	0.002	0.002	0.001	0.009	0.000
25	0.001	0.002	0.000	0.007	0.003	0.018	0.001	0.001	0.005	0.005	0.001	0.001	0.003	0.007	0.007	0.008	0.015	0.004	0.000	0.000	0.000	0.000	0.002	0.001	0.004	0.018	0.000
26	0.000	0.000	0.002	0.000	0.000	0.000	0.000	0.000	0.001	0.001	0.003	0.000	0.002	0.002	0.000	0.000	0.000	0.001	0.003	0.000	0.000	0.000	0.000	0.000	0.001	0.003	0.000
27	0.000	0.000	0.000	0.000	0.000	0.000	0.000	0.000	0.000	0.000	0.001	0.000	0.002	0.000	0.000	0.000	0.000	0.001	0.001	0.000	0.001	0.001	0.000	0.000	0.000	0.002	0.000
28	0.000	0.001	0.000	0.000	0.000	0.000	0.001	0.001	0.000	0.000	0.000	0.000	0.000	0.001	0.003	0.001	0.000	0.001	0.003	0.002	0.002	0.000	0.002	0.000	0.001	0.003	0.000
29	0.001	0.001	0.001	0.008	0.000	0.000	0.000	0.000	0.000	0.000	0.000	0.000	0.000	0.000	0.002	0.000	0.000	0.000	0.000	0.000	0.000	0.000	0.000	0.000	0.001	0.008	0.000
30	0.019	0.016	0.009	0.009	0.000	0.001	0.000	0.001	0.000	0.000	0.000	0.000	0.000	0.001	0.000	0.000	0.000	0.000	0.000	0.000	0.000	0.000	0.000	0.000	0.002	0.019	0.000
31	0.000	0.000		0.000	0.000	0.000	0.000	0.000	0.000	0.030	0.031	0.002	0.002	0.014	0.067	0.039	0.001	0.002	0.000	0.000	0.000	0.000	0.000	0.000	0.008	0.067	0.000
AVG	0.001	0.001	0.001	0.001	0.001	0.001	0.000	0.000	0.001	0.002	0.002	0.001	0.001	0.002	0.003	0.002	0.001	0.001	0.002	0.001	0.001	0.001	0.000	0.001	0.001		
MAX	0.019	0.016	0.009	0.009	0.017	0.018	0.004	0.006	0.005	0.030	0.031	0.017	0.004	0.015	0.067	0.039	0.015	0.011	0.038	0.014	0.022	0.018	0.002	0.008		0.067	
MIN	0.000	0.000	0.000	0.000	0.000	0.000	0.000	0.000	0.000	0.000	0.000	0.000	0.000	0.000	0.000	0.000	0.000	0.000	0.000	0.000	0.000	0.000	0.000	0.000			0.000

TOTAL HOURS = 744 NUMBER OF GOOD HOURS = 721 NUMBER OF MISSING HOURS = 23 DATA CAPTURE = 96.91 (PERCENT)

NITROGEN OXIDES PPM		DATE (DAY,HOUR)				DATE (DAY,HOUR)	
MONTHLY AVERAGE	0.001						
-- 1HR AVERAGE --				-- 8HR RUNNING AVERAGE --			
HIGHEST AVERAGE	0.067	31	15	HIGHEST AVERAGE	0.023	31	17
2ND HIGHEST AVG.	0.039	31	16	2ND HIGHEST AVG.	0.023	31	16
-- 3HR RUNNING AVERAGE --				-- 24HR RUNNING AVERAGE --			
HIGHEST AVERAGE	0.040	31	16	HIGHEST AVERAGE	0.008	31	18
2ND HIGHEST AVG.	0.036	31	17	2ND HIGHEST AVG.	0.008	31	19

Wainwright Near-Term Air Quality Monitoring Program - Wainwright, Alaska
AUGUST 2009

NITROGEN DIOXIDE - PPM

HOURS (LST)

HR-BEG	00	01	02	03	04	05	06	07	08	09	10	11	12	13	14	15	16	17	18	19	20	21	22	23			
HR-END	01	02	03	04	05	06	07	08	09	10	11	12	13	14	15	16	17	18	19	20	21	22	23	24			
DAY																									AVG/	MAX/	MIN
1	0.000	0.007	0.002	0.000	0.005	0.001	0.000	0.000	0.000	0.001	0.000	0.000	0.000	0.000	0.001	0.001	0.000	0.000	0.000	0.000	0.002	0.001	0.001	0.000	0.001	0.007	0.000
2	0.000	0.000	0.000	0.000	0.000	0.000	0.000	0.000	0.000	0.000	0.000	0.000	0.000	0.000	0.000	0.000	0.000	0.000	0.000	0.001	0.000	0.000	0.000	0.000	0.000	0.001	0.000
3	0.000	0.000		0.000	0.000	0.000		0.000	0.000	0.000	0.000	0.000	0.000	0.000	0.000	0.001	0.001	0.001	0.001	0.001	0.000	0.000	0.000	0.000	0.000	0.001	0.000
4	0.000	0.000	0.000	0.000	0.000	0.000	0.000	0.000	0.002	0.001	0.001	0.000	0.000	0.002	0.000	0.000	0.000	0.002	0.009	0.002	0.006	0.005	0.001	0.000	0.001	0.009	0.000
5	0.000	0.000	0.000	0.001	0.002	0.001	0.001	0.002	0.002	0.000	0.004	0.005	0.002	0.002	0.001	0.000	0.000	0.000	0.000	0.000	0.000	0.000	0.000	0.000	0.001	0.005	0.000
6	0.000	0.000	0.000	0.000	0.000	0.000	0.000	0.000	0.000	0.000	0.000	0.000		0.000	0.000	0.000	0.000	0.000	0.000	0.000	0.001	0.000	0.000	0.000	0.000	0.001	0.000
7	0.000	0.000	0.000	0.000	0.000	0.001	0.001	0.000	0.000	0.001	0.000	0.000	0.000	0.000	0.000	0.000	0.000	0.000	0.000	0.000	0.000	0.000	0.000	0.000	0.000	0.001	0.000
8	0.001	0.001	0.001	0.001	0.000	0.000	0.000	0.000	0.000	0.000	0.000	0.000	0.000	0.004	0.000	0.000	0.000	0.001	0.001	0.001	0.001	0.000	0.000	0.000	0.001	0.004	0.000
9	0.000	0.001	0.000	0.000	0.000	0.000	0.000	0.000	0.000	0.000	0.001	0.000	0.000	0.000	0.000	0.000	0.000	0.000	0.000	0.000	0.000	0.000	0.000	0.003	0.000	0.003	0.000
10	0.001	0.001		0.002	0.000	0.002	0.001	0.001	0.002	0.001	0.001	0.001	0.001	0.004	0.004	0.003	0.004	0.004	0.000	0.000	0.000	0.000	0.000	0.000	0.001	0.004	0.000
11	0.000	0.000	0.000	0.000	0.000	0.000	0.000	0.000	0.001	0.000	0.000	0.000	0.000	0.000	0.000	0.000	0.000	0.000	0.005	0.006	0.001	0.000	0.000	0.004	0.001	0.006	0.000
12	0.000	0.000	0.000	0.000	0.000	0.000	0.000	0.000	0.001	0.000	0.000	0.000	0.000	0.001	0.000	0.000	0.001	0.000	0.000	0.000	0.000	0.000	0.001	0.001	0.000	0.001	0.000
13	0.000	0.000	0.000	0.000	0.000	0.000	0.000		0.000	0.000	0.000	0.000	0.001	0.000	0.000	0.000	0.000	0.000	0.001	0.000	0.000	0.000	0.000	0.000	0.000	0.001	0.000
14	0.001	0.000	0.000	0.001	0.001	0.000	0.000	0.000	0.000	0.000	0.000	0.000	0.000	0.000	0.000	0.000	0.000	0.000	0.000	0.000	0.000	0.000	0.000	0.000	0.000	0.001	0.000
15	0.000	0.000	0.000	0.000	0.000	0.000	0.000	0.000	0.000	0.001	0.000	0.000	0.000	0.000	0.000	0.001	0.000	0.000	0.000	0.000	0.000	0.001	0.000	0.001	0.000	0.001	0.000
16	0.001	0.001	0.001	0.001	0.000	0.000	0.000	0.000	0.000	0.000	0.000	0.000	0.000	0.000	0.000	0.000	0.000	0.000	0.000	0.000	0.000	0.000	0.000	0.001	0.000	0.001	0.000
17	0.001	0.001		0.000	0.000	0.000	0.000	0.000	0.000	0.000	0.002	0.000	0.000	0.001	0.000	0.000	0.000	0.000	0.000	0.000	0.000	0.000	0.000	0.000	0.000	0.002	0.000
18	0.000	0.000	0.000	0.000	0.000	0.000	0.000	0.000	0.000	0.000	0.000	0.000	0.000	0.000	0.000	0.000	0.000	0.000	0.000	0.000	0.000	0.000	0.000	0.000	0.000	0.000	0.000
19	0.000	0.000	0.000	0.000	0.000	0.000	0.000	0.000	0.000	0.000	0.000	0.000	0.000	0.000	0.000	0.000	0.000	0.000	0.000	0.001	0.000	0.006	0.000	0.000	0.000	0.006	0.000
20	0.000	0.000	0.000	0.000	0.000	0.000	0.000	0.000						0.000	0.000	0.000	0.000	0.000	0.000	0.000	0.000	0.000	0.000	0.000	0.000	0.000	0.000
21	0.000	0.000	0.000	0.000	0.003	0.000						0.000	0.001	0.000	0.003	0.002	0.003	0.000	0.000	0.001	0.000	0.000	0.000	0.000	0.001	0.003	0.000
22	0.000	0.000	0.000	0.000	0.001	0.000	0.001	0.000	0.000	0.000	0.000	0.000	0.000	0.000	0.000	0.000	0.000	0.001	0.000	0.000	0.001	0.000	0.000	0.000	0.000	0.001	0.000
23	0.000	0.000	0.000	0.000	0.000	0.001	0.000						0.000	0.000	0.000	0.000	0.000	0.000	0.000	0.000	0.000	0.000	0.000	0.000	0.000	0.001	0.000
24	0.000	0.000		0.000	0.000	0.000	0.000	0.000	0.000	0.000	0.000	0.000	0.002	0.004	0.001	0.001	0.001	0.001	0.000	0.000	0.001	0.000	0.002	0.002	0.001	0.004	0.000
25	0.001	0.002	0.000	0.003	0.001	0.009	0.000	0.000	0.003	0.003	0.001	0.001	0.001	0.003	0.003	0.003	0.006	0.002	0.000	0.000	0.000	0.000	0.001	0.000	0.002	0.009	0.000
26	0.000	0.000	0.002	0.000	0.000	0.000	0.000	0.000	0.000	0.001	0.001	0.000	0.001	0.001	0.000	0.000	0.000	0.000	0.001	0.000	0.000	0.000	0.000	0.000	0.000	0.002	0.000
27	0.000	0.000	0.000	0.000	0.000	0.000	0.000	0.000	0.000	0.000	0.000	0.000	0.001	0.000	0.000	0.000	0.000	0.000	0.000	0.000	0.000	0.000	0.000	0.000	0.000	0.001	0.000
28	0.000	0.001	0.000	0.000	0.000	0.000	0.001	0.001	0.000	0.000	0.000	0.000	0.000	0.000	0.002	0.001	0.000	0.001	0.002	0.001	0.001	0.000	0.001	0.000	0.001	0.002	0.000
29	0.001	0.001	0.001	0.004	0.000	0.000	0.000	0.000	0.000	0.000	0.000	0.000	0.000	0.000	0.000	0.000	0.000	0.000	0.000	0.000	0.000	0.000	0.000	0.000	0.000	0.004	0.000
30	0.009	0.006	0.004	0.004	0.000	0.001	0.000	0.000	0.000	0.000	0.000	0.000	0.000	0.000	0.000	0.000	0.000	0.000	0.000	0.000	0.000	0.000	0.000	0.000	0.001	0.009	0.000
31	0.000	0.000		0.000	0.000	0.000	0.000	0.000	0.000	0.008	0.010	0.000	0.001	0.006	0.034	0.006	0.000	0.000	0.000	0.000	0.000	0.000	0.000	0.000	0.003	0.034	0.000
AVG	0.001	0.001	0.000	0.001	0.000	0.001	0.000	0.000	0.000	0.001	0.001	0.000	0.000	0.001	0.002	0.001	0.001	0.000	0.001	0.000	0.000	0.000	0.000	0.000	0.001		
MAX	0.009	0.007	0.004	0.004	0.005	0.009	0.001	0.002	0.003	0.008	0.010	0.005	0.002	0.006	0.034	0.006	0.006	0.004	0.009	0.006	0.006	0.006	0.002	0.004		0.034	
MIN	0.000	0.000	0.000	0.000	0.000	0.000	0.000	0.000	0.000	0.000	0.000	0.000	0.000	0.000	0.000	0.000	0.000	0.000	0.000	0.000	0.000	0.000	0.000	0.000			0.000

TOTAL HOURS = 744 NUMBER OF GOOD HOURS = 721 NUMBER OF MISSING HOURS = 23 DATA CAPTURE = 96.91 (PERCENT)

NITROGEN DIOXIDE PPM		DATE (DAY,HOUR)				DATE (DAY,HOUR)			
MONTHLY AVERAGE	0.001								
-- 1HR AVERAGE --				-- 8HR RUNNING AVERAGE --					
HIGHEST AVERAGE	0.034	31	15	HIGHEST AVERAGE	0.008	31	16		
2ND HIGHEST AVG.	0.010	31	11	2ND HIGHEST AVG.	0.008	31	17		
-- 3HR RUNNING AVERAGE --				-- 24HR RUNNING AVERAGE --					
HIGHEST AVERAGE	0.015	31	16	HIGHEST AVERAGE	0.003	31	24		
2ND HIGHEST AVG.	0.014	31	15	2ND HIGHEST AVG.	0.003	31	23		

Wainwright Near-Term Air Quality Monitoring Program - Wainwright, Alaska
AUGUST 2009

NITRIC OXIDE - PPM

HOURS (LST)

HR-BEG	00	01	02	03	04	05	06	07	08	09	10	11	12	13	14	15	16	17	18	19	20	21	22	23			
HR-END	01	02	03	04	05	06	07	08	09	10	11	12	13	14	15	16	17	18	19	20	21	22	23	24			
DAY																									AVG/	MAX/	MIN
1	0.000	0.009	0.005	0.000	0.013	0.001	0.000	0.000	0.000	0.001	0.000	0.000	0.000	0.000	0.001	0.002	0.001	0.001	0.001	0.001	0.002	0.002	0.001	0.000	0.002	0.013	0.000
2	0.000	0.000	0.000	0.000	0.000	0.000	0.000	0.000	0.000	0.000	0.000	0.000	0.000	0.000	0.000	0.000	0.000	0.000	0.000	0.000	0.000	0.000	0.000	0.000	0.000	0.000	0.000
3	0.000	0.000		0.000	0.000	0.000		0.000	0.001	0.001	0.001	0.000	0.000	0.000	0.000	0.001	0.001	0.002	0.001	0.001	0.000	0.000	0.000	0.000	0.000	0.002	0.000
4	0.000	0.000	0.000	0.000	0.000	0.000	0.000	0.001	0.003	0.001	0.002	0.001	0.001	0.003	0.000	0.000	0.001	0.006	0.027	0.003	0.016	0.013	0.001	0.000	0.003	0.027	0.000
5	0.000	0.000	0.000	0.001	0.001	0.000	0.003	0.004	0.003	0.001	0.009	0.012	0.001	0.005	0.002	0.001	0.001	0.000	0.001	0.000	0.000	0.000	0.000	0.000	0.002	0.012	0.000
6	0.000	0.000	0.000	0.000	0.000	0.000	0.000	0.000	0.001	0.001	0.000	0.000		0.000	0.000	0.000	0.001	0.001	0.000	0.000	0.000	0.000	0.000	0.000	0.000	0.001	0.000
7	0.000	0.000	0.000	0.000	0.000	0.000	0.000	0.000	0.000	0.001	0.000	0.000	0.000	0.000	0.000	0.000	0.001	0.000	0.000	0.000	0.000	0.000	0.000	0.000	0.000	0.001	0.000
8	0.001	0.001	0.001	0.001	0.000	0.000	0.000	0.000	0.000	0.000	0.000	0.000	0.000	0.004	0.000	0.001	0.001	0.000	0.001	0.001	0.001	0.000	0.000	0.000	0.001	0.004	0.000
9	0.000	0.001	0.000	0.000	0.000	0.000	0.000	0.000	0.001	0.000	0.001	0.000	0.000	0.000	0.000	0.000	0.000	0.000	0.000	0.000	0.000	0.000	0.000	0.004	0.000	0.004	0.000
10	0.001	0.001		0.002	0.000	0.002	0.001	0.000	0.003	0.001	0.004	0.002	0.004	0.010	0.008	0.005	0.008	0.007	0.000	0.000	0.000	0.000	0.000	0.000	0.003	0.010	0.000
11	0.000	0.000	0.000	0.000	0.000	0.000	0.000	0.000	0.001	0.000	0.001	0.000	0.001	0.000	0.000	0.000	0.000	0.000	0.006	0.009	0.000	0.000	0.000	0.004	0.001	0.009	0.000
12	0.000	0.000	0.000	0.000	0.000	0.000	0.000	0.000	0.001	0.001	0.000	0.000	0.000	0.001	0.000	0.000	0.000	0.000	0.000	0.000	0.001	0.000	0.002	0.001	0.000	0.002	0.000
13	0.000	0.000	0.000	0.000	0.000	0.000	0.000		0.000	0.000	0.001	0.000	0.000	0.000	0.000	0.000	0.000	0.000	0.001	0.000	0.000	0.001	0.000	0.002	0.000	0.002	0.000
14	0.001	0.001	0.001	0.001	0.001	0.001	0.001	0.001	0.001	0.000	0.000	0.000	0.000	0.000	0.000	0.000	0.000	0.000	0.000	0.000	0.000	0.000	0.000	0.000	0.000	0.001	0.000
15	0.000	0.000	0.000	0.000	0.000	0.000	0.000	0.000	0.000	0.001	0.001	0.001	0.001	0.001	0.001	0.001	0.000	0.000	0.000	0.001	0.000	0.001	0.001	0.001	0.000	0.001	0.000
16	0.001	0.001	0.001	0.000	0.000	0.000	0.000	0.000	0.000	0.001	0.000	0.000	0.000	0.000	0.000	0.000	0.000	0.000	0.000	0.000	0.000	0.000	0.000	0.000	0.000	0.001	0.000
17	0.001	0.001		0.000	0.000	0.000	0.000	0.001	0.001	0.001	0.003	0.000	0.000	0.003	0.000	0.000	0.001	0.001	0.000	0.000	0.000	0.000	0.000	0.000	0.001	0.003	0.000
18	0.000	0.000	0.000	0.000	0.000	0.000	0.000	0.000	0.000	0.000	0.000	0.000	0.000	0.000	0.001	0.000	0.001	0.000	0.000	0.000	0.000	0.000	0.000	0.000	0.000	0.001	0.000
19	0.000	0.000	0.000	0.000	0.000	0.000	0.000	0.000	0.000	0.000	0.000	0.000	0.000	0.000	0.000	0.000	0.001	0.002	0.001	0.001	0.000	0.010	0.002	0.000	0.001	0.010	0.000
20	0.000	0.001	0.000	0.001	0.000	0.000	0.000	0.000						0.000	0.000	0.001	0.000	0.000	0.000	0.000	0.000	0.000	0.000	0.000	0.000	0.001	0.000
21	0.000	0.000	0.000	0.000	0.003	0.000						0.000	0.000	0.000	0.002	0.002	0.003	0.000	0.000	0.001	0.001	0.000	0.000	0.000	0.001	0.003	0.000
22	0.000	0.000	0.000	0.000	0.003	0.000	0.000	0.000	0.000	0.000	0.000	0.000	0.000	0.000	0.000	0.000	0.001	0.001	0.001	0.000	0.001	0.001	0.000	0.000	0.000	0.003	0.000
23	0.000	0.000	0.000	0.000	0.000	0.001	0.000						0.000	0.000	0.001	0.000	0.001	0.001	0.001	0.000	0.000	0.000	0.000	0.000	0.000	0.001	0.000
24	0.000	0.000		0.000	0.000	0.000	0.000	0.001	0.001	0.000	0.000	0.001	0.003	0.005	0.002	0.000	0.001	0.001	0.001	0.001	0.001	0.000	0.000	0.000	0.001	0.005	0.000
25	0.000	0.000	0.000	0.004	0.002	0.010	0.001	0.001	0.003	0.002	0.001	0.000	0.003	0.006	0.004	0.005	0.008	0.002	0.000	0.000	0.001	0.000	0.001	0.001	0.002	0.010	0.000
26	0.000	0.000	0.001	0.000	0.000	0.000	0.000	0.000	0.001	0.001	0.003	0.000	0.001	0.001	0.001	0.000	0.000	0.004	0.003	0.000	0.001	0.000	0.000	0.000	0.001	0.004	0.000
27	0.000	0.000	0.000	0.000	0.000	0.000	0.000	0.000	0.000	0.001	0.002	0.000	0.001	0.000	0.000	0.000	0.000	0.001	0.000	0.000	0.001	0.001	0.000	0.000	0.000	0.002	0.000
28	0.000	0.001	0.000	0.000	0.000	0.000	0.001	0.000	0.000	0.000	0.000	0.000	0.000	0.001	0.003	0.001	0.000	0.000	0.001	0.001	0.001	0.000	0.001	0.000	0.000	0.003	0.000
29	0.000	0.001	0.001	0.005	0.000	0.000	0.000	0.000	0.000	0.000	0.000	0.000	0.000	0.000	0.001	0.001	0.000	0.000	0.000	0.000	0.000	0.000	0.000	0.000	0.000	0.005	0.000
30	0.010	0.009	0.005	0.007	0.000	0.000	0.000	0.001	0.000	0.000	0.000	0.000	0.001	0.001	0.000	0.001	0.001	0.000	0.000	0.000	0.000	0.000	0.000	0.000	0.001	0.010	0.000
31	0.000	0.000		0.000	0.000	0.000	0.000	0.000	0.000	0.025	0.025	0.002	0.001	0.011	0.053	0.040	0.001	0.002	0.000	0.000	0.000	0.000	0.000	0.000	0.007	0.053	0.000
AVG	0.000	0.001	0.001	0.001	0.001	0.000	0.000	0.000	0.001	0.001	0.002	0.001	0.001	0.002	0.003	0.002	0.001	0.001	0.001	0.001	0.001	0.001	0.000	0.000	0.001		
MAX	0.010	0.009	0.005	0.007	0.013	0.010	0.003	0.004	0.003	0.025	0.025	0.012	0.004	0.011	0.053	0.040	0.008	0.007	0.027	0.009	0.016	0.013	0.002	0.004		0.053	
MIN	0.000	0.000	0.000	0.000	0.000	0.000	0.000	0.000	0.000	0.000	0.000	0.000	0.000	0.000	0.000	0.000	0.000	0.000	0.000	0.000	0.000	0.000	0.000	0.000			0.000

TOTAL HOURS = 744 NUMBER OF GOOD HOURS = 721 NUMBER OF MISSING HOURS = 23 DATA CAPTURE = 96.91 (PERCENT)

NITRIC OXIDE PPM		DATE (DAY,HOUR)				DATE (DAY,HOUR)	
MONTHLY AVERAGE	0.001						
-- 1HR AVERAGE --				-- 8HR RUNNING AVERAGE --			
HIGHEST AVERAGE	0.053	31	15	HIGHEST AVERAGE	0.020	31	17
2ND HIGHEST AVG.	0.040	31	16	2ND HIGHEST AVG.	0.020	31	16
-- 3HR RUNNING AVERAGE --				-- 24HR RUNNING AVERAGE --			
HIGHEST AVERAGE	0.035	31	16	HIGHEST AVERAGE	0.007	31	18
2ND HIGHEST AVG.	0.031	31	17	2ND HIGHEST AVG.	0.007	31	19

Wainwright Near-Term Air Quality Monitoring Program - Wainwright, Alaska
AUGUST 2009

SULFUR DIOXIDE - PPM

HOURS (LST)

HR-BEG	00	01	02	03	04	05	06	07	08	09	10	11	12	13	14	15	16	17	18	19	20	21	22	23			
HR-END	01	02	03	04	05	06	07	08	09	10	11	12	13	14	15	16	17	18	19	20	21	22	23	24			
DAY																									AVG/	MAX/	MIN
1	0.000	0.000	0.000	0.000	0.000	0.000	0.000	0.000	0.000	0.000	0.000	0.000	0.000	0.000	0.000	0.000	0.000	0.000	0.000	0.000	0.000	0.000	0.000	0.000	0.000	0.000	0.000
2	0.000	0.000	0.000	0.000	0.000	0.000	0.000	0.000	0.000	0.000	0.000	0.000	0.000	0.000	0.000	0.000	0.000	0.000	0.000	0.000	0.000	0.000	0.000	0.000	0.000	0.000	0.000
3	0.000	0.000		0.000	0.000	0.000		0.000	0.000	0.001	0.000	0.000	0.000	0.000	0.000	0.000	0.000	0.000	0.000	0.000	0.000	0.000	0.000	0.000	0.000	0.001	0.000
4	0.000	0.000	0.000	0.000	0.000	0.000	0.000	0.000	0.000	0.000	0.000	0.000	0.000	0.000	0.000	0.000	0.000	0.000	0.000	0.000	0.000	0.000	0.000	0.000	0.000	0.000	0.000
5	0.000	0.000	0.000	0.000	0.000	0.000	0.000	0.000	0.000	0.000	0.000	0.000	0.000	0.000	0.000	0.000	0.000	0.000	0.000	0.000	0.000	0.000	0.000	0.000	0.000	0.000	0.000
6	0.000	0.000	0.000	0.000	0.000	0.000	0.000	0.000	0.000	0.000	0.000	0.000		0.000	0.000	0.000	0.000	0.000	0.000	0.000	0.000	0.000	0.000	0.000	0.000	0.000	0.000
7	0.000	0.000	0.000	0.000	0.000	0.000	0.000	0.000	0.000	0.000	0.000	0.000	0.000	0.000	0.000	0.000	0.000	0.000	0.000	0.000	0.000	0.000	0.000	0.000	0.000	0.000	0.000
8	0.000	0.000	0.000	0.000	0.000	0.000	0.000	0.000	0.000	0.000	0.000	0.000	0.000	0.000	0.000	0.000	0.000	0.000	0.000	0.000	0.000	0.000	0.000	0.000	0.000	0.000	0.000
9	0.000	0.000	0.001	0.000	0.001	0.000	0.000	0.000	0.000	0.000	0.000	0.000	0.000	0.000	0.000	0.000	0.000	0.000	0.000	0.000	0.000	0.000	0.000	0.000	0.000	0.001	0.000
10	0.000	0.000		0.000	0.000	0.000	0.000	0.000	0.000	0.000	0.000	0.000	0.000	0.000	0.000	0.000	0.000	0.000	0.000	0.000	0.000	0.000	0.000	0.000	0.000	0.000	0.000
11	0.000	0.000	0.000	0.000	0.000	0.000	0.000	0.000	0.000	0.000	0.000	0.000	0.000	0.000	0.000	0.000	0.000	0.000	0.000	0.000	0.000	0.000	0.000	0.000	0.000	0.000	0.000
12	0.000	0.000	0.000	0.000	0.000	0.000	0.000	0.000	0.000	0.000	0.000	0.000	0.000	0.000	0.000	0.000	0.000	0.000	0.000	0.000	0.000	0.000	0.000	0.000	0.000	0.000	0.000
13	0.000	0.000	0.000	0.000	0.000	0.000	0.000		0.000	0.000	0.000	0.000	0.000	0.000	0.000	0.000	0.000	0.000	0.000	0.000	0.000	0.000	0.000	0.000	0.000	0.000	0.000
14	0.000	0.000	0.000	0.000	0.001	0.000	0.000	0.000	0.000	0.000	0.000	0.000	0.000	0.000	0.000	0.000	0.000	0.000	0.000	0.000	0.000	0.000	0.000	0.000	0.000	0.001	0.000
15	0.000	0.000	0.000	0.000	0.000	0.000	0.000	0.000	0.000	0.000	0.000	0.000	0.000	0.000	0.000	0.000	0.000	0.000	0.000	0.000	0.000	0.000	0.000	0.000	0.000	0.000	0.000
16	0.000	0.000	0.000	0.000	0.000	0.000	0.000	0.000	0.000	0.000	0.000	0.000	0.000	0.000	0.000	0.000	0.000	0.000	0.000	0.000	0.000	0.000	0.000	0.000	0.000	0.000	0.000
17	0.000	0.000		0.000	0.000	0.001	0.000	0.000	0.000	0.000	0.000	0.000	0.000	0.000	0.000	0.000	0.000	0.000	0.000	0.000	0.000	0.000	0.000	0.000	0.000	0.001	0.000
18	0.000	0.000	0.000	0.000	0.000	0.000	0.000	0.000	0.000	0.000	0.000	0.000	0.000	0.000	0.000	0.000	0.000	0.000	0.000	0.000	0.000	0.000	0.000	0.000	0.000	0.000	0.000
19	0.000	0.000	0.000	0.000	0.000	0.000	0.000	0.000	0.000	0.000	0.000	0.000	0.000	0.000	0.000	0.000	0.000	0.000	0.000	0.000	0.000	0.001	0.000	0.000	0.000	0.001	0.000
20	0.000	0.000	0.000	0.000	0.001	0.000	0.000	0.000						0.001	0.001	0.000	0.000	0.000	0.000	0.000	0.000	0.000	0.000	0.000	0.000	0.001	0.000
21	0.000	0.000	0.000	0.000	0.001	0.000						0.000	0.000	0.000	0.000	0.000	0.000	0.000	0.000	0.000	0.000	0.000	0.000	0.000	0.000	0.001	0.000
22	0.000	0.000	0.000	0.000	0.001	0.001	0.000	0.000	0.000	0.000	0.000	0.000	0.000	0.000	0.000	0.000	0.000	0.000	0.000	0.000	0.000	0.000	0.000	0.000	0.000	0.001	0.000
23	0.000	0.000	0.000	0.000	0.000	0.000	0.000						0.000	0.000	0.000	0.000	0.000	0.000	0.000	0.000	0.000	0.000	0.000	0.000	0.000	0.000	0.000
24	0.000	0.000		0.000	0.000	0.000	0.000	0.000	0.000	0.000	0.000	0.000	0.000	0.000	0.000	0.000	0.000	0.000	0.000	0.000	0.000	0.000	0.000	0.000	0.000	0.000	0.000
25	0.000	0.000	0.000	0.000	0.001	0.001	0.001	0.000	0.000	0.000	0.000	0.001	0.001	0.000	0.000	0.000	0.000	0.000	0.000	0.000	0.000	0.000	0.000	0.000	0.000	0.001	0.000
26	0.000	0.000	0.000	0.000	0.000	0.000	0.000	0.000	0.000	0.000	0.000	0.000	0.000	0.000	0.000	0.000	0.000	0.000	0.000	0.000	0.000	0.000	0.000	0.000	0.000	0.000	0.000
27	0.000	0.000	0.000	0.000	0.000	0.000	0.000	0.000	0.000	0.000	0.000	0.000	0.000	0.000	0.000	0.000	0.000	0.000	0.000	0.000	0.000	0.000	0.000	0.000	0.000	0.000	0.000
28	0.000	0.001	0.000	0.000	0.000	0.000	0.000	0.000	0.000	0.000	0.000	0.000	0.000	0.000	0.000	0.000	0.000	0.000	0.000	0.000	0.000	0.000	0.000	0.000	0.000	0.001	0.000
29	0.000	0.000	0.000	0.000	0.000	0.000	0.000	0.000	0.000	0.000	0.000	0.000	0.000	0.000	0.000	0.000	0.000	0.000	0.000	0.000	0.000	0.000	0.000	0.000	0.000	0.000	0.000
30	0.000	0.000	0.000	0.000	0.000	0.000	0.000	0.000	0.000	0.000	0.000	0.000	0.000	0.000	0.000	0.000	0.000	0.000	0.000	0.000	0.000	0.000	0.000	0.000	0.000	0.000	0.000
31	0.000	0.000		0.000	0.000	0.000	0.000	0.000	0.000	0.000	0.001	0.000	0.000	0.000	0.001	0.001	0.000	0.001	0.000	0.000	0.000	0.000	0.000	0.000	0.000	0.001	0.000
AVG	0.000	0.000	0.000	0.000	0.000	0.000	0.000	0.000	0.000	0.000	0.000	0.000	0.000	0.000	0.000	0.000	0.000	0.000	0.000	0.000	0.000	0.000	0.000	0.000	0.000		
MAX	0.000	0.001	0.001	0.000	0.001	0.001	0.001	0.000	0.000	0.001	0.001	0.001	0.001	0.001	0.001	0.001	0.000	0.001	0.000	0.000	0.000	0.001	0.000	0.000		0.001	
MIN	0.000	0.000	0.000	0.000	0.000	0.000	0.000	0.000	0.000	0.000	0.000	0.000	0.000	0.000	0.000	0.000	0.000	0.000	0.000	0.000	0.000	0.000	0.000	0.000			0.000

TOTAL HOURS = 744 NUMBER OF GOOD HOURS = 721 NUMBER OF MISSING HOURS = 23 DATA CAPTURE = 96.91 (PERCENT)

SULFUR DIOXIDE PPM		DATE (DAY,HOUR)				DATE (DAY,HOUR)			
MONTHLY AVERAGE	0.000								
-- 1HR AVERAGE --				-- 8HR RUNNING AVERAGE --					
HIGHEST AVERAGE	0.001	3	10	HIGHEST AVERAGE	0.001	25	12		
2ND HIGHEST AVG.	0.001	9	3	2ND HIGHEST AVG.	0.001	25	13		
-- 3HR RUNNING AVERAGE --				-- 24HR RUNNING AVERAGE --					
HIGHEST AVERAGE	0.001	25	7	HIGHEST AVERAGE	0.000	20	21		
2ND HIGHEST AVG.	0.001	9	5	2ND HIGHEST AVG.	0.000	20	20		

Wainwright Near-Term Air Quality Monitoring Program - Wainwright, Alaska
AUGUST 2009

OZONE - PPM

HOURS (LST)

HR-BEG	00	01	02	03	04	05	06	07	08	09	10	11	12	13	14	15	16	17	18	19	20	21	22	23			
HR-END	01	02	03	04	05	06	07	08	09	10	11	12	13	14	15	16	17	18	19	20	21	22	23	24			
DAY																									AVG/	MAX/	MIN
1	0.013	0.007	0.010	0.010	0.007	0.011	0.012	0.012	0.014	0.013	0.014	0.014	0.015	0.015	0.015	0.014	0.015	0.016	0.016	0.016	0.014	0.015	0.014	0.011	0.013	0.016	0.007
2	0.009	0.010	0.013	0.013	0.014	0.013	0.014	0.014	0.015	0.017	0.019	0.019	0.019	0.020	0.022	0.022	0.022	0.021	0.020	0.019	0.018	0.018	0.018	0.019	0.017	0.022	0.009
3	0.016	0.018		0.015	0.014	0.013		0.012	0.013	0.013	0.015	0.016	0.016	0.019	0.019	0.018	0.018	0.019	0.018	0.017	0.017	0.017	0.014	0.013	0.016	0.019	0.012
4	0.013	0.013	0.013	0.013	0.013	0.013	0.012	0.011	0.011	0.011	0.011	0.012	0.014	0.014	0.016	0.017	0.017	0.011	0.007	0.015	0.010	0.009	0.012	0.014	0.013	0.017	0.007
5	0.014	0.014	0.014	0.015	0.014	0.015	0.015	0.014	0.015	0.016	0.013	0.013	0.017	0.015	0.016	0.016	0.017	0.017	0.017	0.017	0.016	0.016	0.015	0.015	0.015	0.017	0.013
6	0.015	0.014	0.013	0.013	0.014	0.014	0.013	0.013	0.013	0.013	0.014	0.015		0.015	0.016	0.017	0.020	0.021	0.020	0.022	0.020	0.020	0.018	0.017	0.016	0.022	0.013
7	0.013	0.012	0.010	0.010	0.010	0.010	0.008	0.007	0.012	0.012	0.012	0.011	0.011	0.014	0.016	0.016	0.016	0.016	0.017	0.017	0.016	0.015	0.014	0.013	0.013	0.017	0.007
8	0.011	0.014	0.015	0.013	0.014	0.015	0.016	0.016	0.017	0.017	0.017	0.017	0.017	0.015	0.019	0.019	0.020	0.022	0.023	0.023	0.023	0.024	0.024	0.025	0.018	0.025	0.011
9	0.025	0.022	0.024	0.024	0.025	0.025	0.025	0.025	0.025	0.024	0.024	0.023	0.021	0.018	0.018	0.018	0.018	0.018	0.018	0.017	0.017	0.018	0.018	0.017	0.021	0.025	0.017
10	0.018	0.019		0.017	0.019	0.016	0.018	0.018	0.017	0.018	0.019	0.018	0.018	0.014	0.015	0.017	0.016	0.017	0.021	0.021	0.021	0.020	0.020	0.019	0.018	0.021	0.014
11	0.019	0.019	0.020	0.021	0.021	0.021	0.022	0.022	0.022	0.022	0.022	0.021	0.021	0.021	0.021	0.021	0.021	0.020	0.019	0.018	0.019	0.017	0.016	0.014	0.020	0.022	0.014
12	0.015	0.014	0.012	0.012	0.011	0.011	0.013	0.014	0.017	0.021	0.020	0.021	0.021	0.022	0.021	0.021	0.021	0.022	0.021	0.020	0.020	0.020	0.020	0.020	0.018	0.022	0.011
13	0.020	0.020	0.020	0.020	0.019	0.019	0.019		0.018	0.018	0.018	0.018	0.018	0.019	0.019	0.019	0.020	0.020	0.020	0.020	0.020	0.020	0.018	0.017	0.019	0.020	0.017
14	0.018	0.020	0.019	0.019	0.019	0.019	0.019	0.018	0.018	0.020	0.020	0.019	0.019	0.019	0.021	0.022	0.022	0.023	0.024	0.023	0.023	0.022	0.020	0.019	0.020	0.024	0.018
15	0.017	0.016	0.015	0.014	0.016	0.019	0.021	0.022	0.021	0.020	0.019	0.019	0.018	0.017	0.017	0.016	0.016	0.016	0.017	0.017	0.017	0.018	0.017	0.017	0.018	0.022	0.014
16	0.017	0.017	0.018	0.019	0.019	0.018	0.018	0.018	0.018	0.019	0.020	0.021	0.021	0.021	0.023	0.023	0.022	0.023	0.023	0.018	0.022	0.026	0.028	0.027	0.021	0.028	0.017
17	0.025	0.023		0.021	0.022	0.022	0.021	0.018	0.019	0.020	0.019	0.019	0.022	0.022	0.023	0.023	0.023	0.023	0.022	0.025	0.025	0.024	0.024	0.025	0.022	0.025	0.018
18	0.023	0.023	0.022	0.023	0.023	0.025	0.027	0.026	0.025	0.025	0.026	0.025	0.025	0.024	0.024	0.025	0.026	0.028	0.030	0.030	0.030	0.028	0.027	0.024	0.026	0.030	0.022
19	0.023	0.023	0.023	0.023	0.023	0.023	0.023	0.023	0.023	0.023	0.024	0.025	0.024	0.023	0.022	0.022	0.022	0.022	0.022	0.022	0.022	0.017	0.020	0.018	0.022	0.025	0.017
20	0.016	0.018	0.017	0.017	0.021	0.022	0.023	0.023						0.021	0.019	0.019	0.020	0.020	0.020	0.020	0.021	0.021	0.018	0.018	0.020	0.023	0.016
21	0.018	0.016	0.013	0.012	0.012	0.014						0.019	0.018	0.018	0.018	0.018	0.017	0.018	0.019	0.018	0.015	0.014	0.015	0.017	0.016	0.019	0.012
22	0.016	0.014	0.015	0.014	0.014	0.017	0.018	0.016	0.016	0.013	0.014	0.016	0.018	0.019	0.019	0.022	0.022	0.022	0.025	0.024	0.024	0.021	0.018	0.019	0.018	0.025	0.013
23	0.021	0.021	0.021	0.021	0.021	0.019	0.017						0.019	0.019	0.019	0.019	0.019	0.017	0.017	0.017	0.017	0.017	0.017	0.016	0.019	0.021	0.016
24	0.016	0.014		0.014	0.014	0.014	0.014	0.015	0.015	0.016	0.020	0.021	0.021	0.018	0.021	0.022	0.022	0.023	0.023	0.023	0.022	0.023	0.022	0.022	0.019	0.023	0.014
25	0.024	0.025	0.026	0.026	0.022	0.022	0.024	0.025	0.025	0.025	0.024	0.022	0.023	0.020	0.021	0.021	0.019	0.022	0.023	0.023	0.022	0.021	0.020	0.021	0.023	0.026	0.019
26	0.019	0.018	0.017	0.018	0.020	0.020	0.020	0.019	0.017	0.018	0.018	0.020	0.021	0.021	0.021	0.021	0.021	0.020	0.020	0.020	0.018	0.018	0.017	0.017	0.019	0.021	0.017
27	0.018	0.016	0.013	0.014	0.013	0.013	0.012	0.011	0.011	0.011	0.012	0.014	0.014	0.015	0.016	0.018	0.020	0.019	0.019	0.018	0.017	0.017	0.017	0.016	0.015	0.020	0.011
28	0.014	0.014	0.021	0.019	0.016	0.019	0.021	0.022	0.022	0.022	0.021	0.024	0.024	0.024	0.024	0.024	0.024	0.024	0.022	0.022	0.022	0.023	0.021	0.021	0.021	0.024	0.014
29	0.022	0.021	0.020	0.021	0.022	0.022	0.022	0.022	0.021	0.021	0.021	0.020	0.019	0.017	0.017	0.019	0.020	0.025	0.024	0.021	0.017	0.019	0.024	0.026	0.021	0.026	0.017
30	0.018	0.020	0.021	0.022	0.022	0.021	0.022	0.021	0.022	0.025	0.025	0.024	0.024	0.024	0.024	0.023	0.023	0.023	0.022	0.022	0.022	0.022	0.021	0.021	0.022	0.025	0.018
31	0.021	0.019		0.018	0.018	0.017	0.016	0.015	0.014	0.012	0.011	0.013	0.014	0.015	0.013	0.013	0.016	0.020	0.020	0.020	0.019	0.018	0.018	0.018	0.016	0.021	0.011
AVG	0.018	0.017	0.017	0.017	0.017	0.017	0.018	0.018	0.018	0.018	0.018	0.019	0.019	0.019	0.019	0.020	0.020	0.020	0.020	0.020	0.020	0.019	0.019	0.019	0.019		
MAX	0.025	0.025	0.026	0.026	0.025	0.025	0.027	0.026	0.025	0.025	0.026	0.025	0.025	0.024	0.024	0.025	0.026	0.028	0.030	0.030	0.030	0.028	0.028	0.027		0.030	
MIN	0.009	0.007	0.010	0.010	0.007	0.010	0.008	0.007	0.011	0.011	0.011	0.011	0.011	0.014	0.013	0.013	0.015	0.011	0.007	0.015	0.010	0.009	0.012	0.011			0.007

TOTAL HOURS = 744 NUMBER OF GOOD HOURS = 721 NUMBER OF MISSING HOURS = 23 DATA CAPTURE = 96.91 (PERCENT)

OZONE PPM		DATE (DAY,HOUR)				DATE (DAY,HOUR)
MONTHLY AVERAGE	0.019					
-- 1HR AVERAGE --				-- 8HR RUNNING AVERAGE --		
HIGHEST AVERAGE	0.030	18	19	HIGHEST AVERAGE	0.028	18 23
2ND HIGHEST AVG.	0.030	18	20	2ND HIGHEST AVG.	0.028	18 24
-- 3HR RUNNING AVERAGE --				-- 24HR RUNNING AVERAGE --		
HIGHEST AVERAGE	0.030	18	21	HIGHEST AVERAGE	0.026	18 23
2ND HIGHEST AVG.	0.029	18	20	2ND HIGHEST AVG.	0.026	19 3

Wainwright Near-Term Air Quality Monitoring Program - Wainwright, Alaska
AUGUST 2009

CARBON MONOXIDE - PPM

HOURS (LST)

HR-BEG	00	01	02	03	04	05	06	07	08	09	10	11	12	13	14	15	16	17	18	19	20	21	22	23			
HR-END	01	02	03	04	05	06	07	08	09	10	11	12	13	14	15	16	17	18	19	20	21	22	23	24			
DAY																									AVG/	MAX/	MIN
1	0.266	0.264	0.290	0.237	0.238	0.226	0.257	0.251	0.209	0.207	0.202	0.196	0.208	0.214	0.207	0.210	0.170	0.163	0.154	0.142	0.142	0.171	0.157	0.157	0.206	0.290	0.142
2	0.159	0.166	0.145	0.134	0.130	0.128	0.123	0.133	0.138	0.144	0.135	0.142	0.141	0.148	0.136	0.120	0.108	0.113	0.118	0.129	0.125	0.109	0.103	0.118	0.131	0.166	0.103
3	0.119	0.118		0.105	0.103	0.098		0.084	0.073	0.072	0.076	0.074	0.073	0.075	0.070	0.068	0.066	0.046	0.091	0.071	0.100	0.067	0.087	0.087	0.083	0.119	0.046
4	0.058	0.069	0.035	0.033	0.038	0.045	0.047	0.035	0.054	0.032	0.043	0.059	0.041	0.040	0.024	0.013	0.008	0.001	0.007	0.015	0.058	0.069	0.128	0.108	0.044	0.128	0.001
5	0.144	0.174	0.153	0.156	0.160	0.152	0.152	0.139	0.137	0.129	0.123	0.114	0.104	0.104	0.098	0.080	0.075	0.084	0.061	0.058	0.061	0.063	0.071	0.070	0.111	0.174	0.058
6	0.071	0.099	0.084	0.087	0.085	0.088	0.089	0.091	0.102	0.089	0.098	0.119		0.102	0.072	0.048	0.057	0.064	0.069	0.066	0.061	0.073	0.092	0.103	0.083	0.119	0.048
7	0.097	0.118	0.114	0.113	0.100	0.098	0.101	0.093	0.116	0.098	0.101	0.094	0.105	0.116	0.116	0.101	0.064	0.048	0.018	0.000	0.000	0.010	0.050	0.081	0.081	0.118	0.000
8	0.060	0.122	0.120	0.085	0.067	0.060	0.065	0.048	0.044	0.041	0.038	0.032	0.036	0.045	0.050	0.048	0.046	0.056	0.045	0.043	0.053	0.055	0.062	0.066	0.058	0.122	0.032
9	0.063	0.078	0.077	0.071	0.069	0.074	0.083	0.073	0.064	0.068	0.078	0.080	0.074	0.075	0.076	0.079	0.074	0.062	0.070	0.069	0.080	0.071	0.085	0.076	0.074	0.085	0.062
10	0.077	0.095		0.135	0.142	0.135	0.138	0.141	0.151	0.145	0.147	0.139	0.128	0.130	0.126	0.124	0.134	0.123	0.091	0.089	0.095	0.061	0.086	0.093	0.118	0.151	0.061
11	0.094	0.097	0.084	0.078	0.081	0.080	0.077	0.078	0.088	0.081	0.083	0.079	0.073	0.078	0.071	0.069	0.046	0.056	0.113	0.102	0.040	0.043	0.034	0.035	0.073	0.113	0.034
12	0.033	0.058	0.045	0.038	0.036	0.037	0.025	0.043	0.044	0.028	0.024	0.025	0.047	0.030	0.028	0.026	0.030	0.023	0.019	0.019	0.029	0.000	0.000	0.006	0.029	0.058	0.000
13	0.071	0.153	0.143	0.153	0.151	0.148	0.140		0.128	0.135	0.145	0.143	0.128	0.127	0.132	0.112	0.113	0.123	0.120	0.122	0.122	0.265	0.136	0.167	0.138	0.265	0.071
14	0.138	0.151	0.119	0.119	0.107	0.103	0.089	0.086	0.098	0.098	0.112	0.109	0.113	0.086	0.092	0.098	0.097	0.083	0.066	0.035	0.096	0.141	0.135	0.122	0.104	0.151	0.035
15	0.087	0.088	0.069	0.064	0.063	0.072	0.109	0.118	0.121	0.112	0.138	0.144	0.138	0.139	0.123	0.135	0.144	0.150	0.143	0.121	0.111	0.114	0.124	0.114	0.114	0.150	0.063
16	0.091	0.150	0.140	0.123	0.123	0.160	0.164	0.186	0.204	0.218	0.215	0.534	0.215	0.214	0.235	0.258	0.253	0.265	0.258	0.230	0.222	0.211	0.207	0.210	0.212	0.534	0.091
17	0.203	0.185		0.128	0.097	0.107	0.129	0.262	0.135	0.156	0.160	0.157	0.189	0.197	0.118	0.081	0.083	0.081	0.065	0.047	0.038	0.058	0.065	0.074	0.122	0.262	0.038
18	0.073	0.084	0.072	0.073	0.086	0.077	0.087	0.088	0.091	0.097	0.089	0.093	0.088	0.090	0.094	0.108	0.069	0.065	0.077	0.088	0.089	0.098	0.124	0.124	0.089	0.124	0.065
19	0.120	0.119	0.115	0.122	0.119	0.109	0.119	0.127	0.146	0.142	0.146	0.139	0.148	0.154	0.181	0.169	0.169	0.148					0.180	0.169	0.142	0.181	0.109
20	0.183	0.285	0.226	0.221	0.206	0.188	0.192	0.184						0.023	0.030								0.024	0.004	0.147	0.285	0.004
21	0.010	0.033										0.131	0.112												0.072	0.131	0.010
22																								0.112	0.112	0.112	0.112
23	0.820	0.839	0.824	0.832	0.832	0.819	0.815						0.176	0.140	0.123	0.077									0.572	0.839	0.077
24	0.048	0.058		0.059	0.065	0.064	0.084	0.101	0.112	0.076	0.075	0.072	0.064	0.061	0.060							0.105	0.114	0.138	0.080	0.138	0.048
25	0.143	0.129	0.109	0.133	0.122	0.169	0.123	0.101	0.128	0.097	0.082	0.109	0.074	0.060								0.113	0.244	0.182	0.125	0.244	0.060
26	0.099	0.100	0.091	0.090	0.091	0.086	0.088	0.089	0.082	0.086	0.098	0.071	0.071	0.067	0.075	0.078	0.075	0.085	0.070	0.071	0.075	0.062	0.071	0.058	0.080	0.100	0.058
27	0.039	0.009	0.000	0.000	0.009	0.016	0.015	0.023	0.041	0.061	0.042	0.044													0.025	0.061	0.000
28						0.044	0.052	0.072	0.047	0.027	0.033	0.036	0.053	0.056	0.055	0.080	0.100	0.108	0.080	0.082	0.068	0.073	0.082	0.078	0.065	0.108	0.027
29	0.051	0.058	0.036	0.062	0.048	0.051	0.055	0.058	0.052	0.057	0.051	0.058	0.068	0.085	0.088	0.093	0.089	0.093	0.099	0.095	0.094	0.102	0.099	0.103	0.073	0.103	0.036
30	0.095	0.076	0.056	0.052	0.060	0.064	0.138	0.116	0.128	0.130	0.123	0.128	0.123	0.121	0.130	0.126	0.122	0.123	0.123	0.131	0.126	0.122	0.117	0.116	0.110	0.138	0.052
31	0.099	0.102		0.105	0.111	0.113	0.128	0.118	0.117	0.137	0.181	0.128	0.132	0.139	0.151	0.121	0.110	0.103			0.097	0.094	0.108	0.114	0.119	0.181	0.094
AVG	0.125	0.141	0.137	0.129	0.126	0.125	0.132	0.109	0.106	0.102	0.105	0.116	0.108	0.104	0.102	0.101	0.096	0.094	0.089	0.083	0.086	0.094	0.103	0.103	0.110		
MAX	0.820	0.839	0.824	0.832	0.832	0.819	0.815	0.262	0.209	0.218	0.215	0.534	0.215	0.214	0.235	0.258	0.253	0.265	0.258	0.230	0.222	0.265	0.244	0.210		0.839	
MIN	0.010	0.009	0.000	0.000	0.009	0.016	0.015	0.023	0.041	0.027	0.024	0.025	0.036	0.023	0.024	0.013	0.008	0.001	0.007	0.000	0.000	0.000	0.000	0.004			0.000

TOTAL HOURS = 744 NUMBER OF GOOD HOURS = 632 NUMBER OF MISSING HOURS = 112 DATA CAPTURE = 84.95 (PERCENT)

CARBON MONOXIDE PPM		DATE (DAY,HOUR)				DATE (DAY,HOUR)	
MONTHLY AVERAGE	0.110						
-- 1HR AVERAGE --				-- 8HR RUNNING AVERAGE --			
HIGHEST AVERAGE	0.839	23	2	HIGHEST AVERAGE	0.827	23	9
2ND HIGHEST AVG.	0.832	23	4	2ND HIGHEST AVG.	0.826	23	8
-- 3HR RUNNING AVERAGE --				-- 24HR RUNNING AVERAGE --			
HIGHEST AVERAGE	0.832	23	4	HIGHEST AVERAGE	0.223	1	18
2ND HIGHEST AVG.	0.829	23	5	2ND HIGHEST AVG.	0.222	17	4

Wainwright Near-Term Air Quality Monitoring Program - Wainwright, Alaska
AUGUST 2009

PM-10 - µg/m3

HOURS (LST)

HR-BEG	00	01	02	03	04	05	06	07	08	09	10	11	12	13	14	15	16	17	18	19	20	21	22	23			
HR-END	01	02	03	04	05	06	07	08	09	10	11	12	13	14	15	16	17	18	19	20	21	22	23	24			
DAY																									AVG/	MAX/	MIN
1	25.	15.	13.	18.	19.	14.	14.	11.	9.	10.	12.	16.	26.	29.	74.	133.	127.	71.	38.	62.	156.	490.	91.	52.	64.	490.	9.
2	36.	6.	7.	8.	7.	4.	5.	9.	9.	18.	17.	27.	16.	68.	41.	38.	46.	51.	111.	81.	68.	45.	34.	13.	32.	111.	4.
3	14.	11.	8.	4.	5.	10.	16.	38.	71.	131.	54.	49.	79.	50.	34.	42.	57.	94.	140.	89.	104.	72.	130.	54.	57.	140.	4.
4	8.	4.	2.	6.	6.	6.	9.	10.	136.	68.	82.	121.	75.	82.	69.	95.	164.	76.	57.	37.	69.	45.	41.	24.	54.	164.	2.
5	37.	19.	7.	10.	10.	4.	4.	18.	23.	7.	19.	9.	27.	37.	23.	24.	42.	69.	28.	56.	12.	16.	28.	22.	23.	69.	4.
6	6.	5.	6.	6.	3.	4.	7.	6.	21.	24.	18.	27.	54.	44.	109.	35.	31.	41.	37.	50.	46.	28.	76.	41.	30.	109.	3.
7	11.	12.	11.	8.	10.	12.	12.	12.	12.	11.	8.	8.	11.	12.	18.	17.	21.	22.	23.	27.	26.	20.	13.	8.	14.	27.	8.
8	2.	4.	7.	7.	6.	7.	7.	7.	7.	6.	8.	9.	6.	8.	11.	11.	8.	17.	16.	10.	11.	11.	9.	10.	9.	17.	2.
9	10.	16.	12.	19.	20.	20.	19.	11.	11.	16.	16.	20.	18.	18.	12.	10.	10.	10.	9.	12.	11.	8.	10.	10.	14.	20.	8.
10	7.	3.	1.	4.	6.	5.	4.	5.	6.	4.	2.	2.	2.	6.	7.	8.	12.	9.	6.	9.	10.	9.	8.	7.	6.	12.	1.
11	9.	8.	5.	4.	5.	5.	0.	3.	4.	2.	7.	7.	10.	12.	23.	11.	20.	39.	16.	27.	18.	24.	22.	13.	12.	39.	0.
12	9.	6.	5.	6.	8.	4.	3.	7.	33.	4.	7.	9.	78.	50.	21.	17.	21.	19.	10.	32.	12.	12.	17.	10.	17.	78.	3.
13	8.	6.	5.	3.	5.	6.	6.		6.	5.	5.	4.	6.	7.	4.	7.	8.	6.	8.	9.	8.	19.	11.	21.	8.	21.	3.
14	2.	4.	3.	1.	3.	4.	5.	7.	7.	7.	7.	7.	6.	5.	9.	18.	19.	16.	12.	14.	21.	10.	10.	8.	9.	21.	1.
15	10.	11.	10.	12.	16.	20.	14.	13.	20.	18.	22.	18.	21.	23.	24.	14.	25.	15.	13.	12.	10.	12.	23.	17.	16.	25.	10.
16	14.	14.	13.	11.	11.	11.	20.	14.	21.	24.	17.	12.	12.	17.	26.	22.	21.	13.	13.	14.	14.	14.	14.	15.	16.	26.	11.
17	14.	13.	12.	13.	14.	21.	20.	12.	13.	21.	16.	19.	16.	21.	16.	19.	36.	33.	27.	19.	21.	21.	26.	25.	20.	36.	12.
18	16.	19.	23.	26.	24.	25.	25.	25.	28.	26.	30.	28.	23.	20.	28.	36.	32.	35.	32.	33.	32.	38.	37.	39.	28.	39.	16.
19	37.	32.	27.	31.	21.	33.	24.	25.	21.	23.	22.	21.	20.	18.	16.	18.	26.	22.	29.	22.	19.	19.	11.	10.	23.	37.	10.
20	10.	42.	25.	8.	8.	6.	5.	6.				5.	6.	8.	6.	6.	9.	6.	7.	9.	10.	13.	9.	8.	10.	42.	5.
21	10.	9.	7.	10.	10.	6.						6.	12.	14.	35.	91.	74.	24.	16.	21.	11.	8.	6.	8.	20.	91.	6.
22	8.	7.	5.	5.	6.	9.	38.	9.	10.	11.	7.	5.	6.	55.	5.	10.	4.	3.	10.	10.	10.	9.	7.	6.	11.	55.	3.
23	10.	11.	9.	8.	8.	8.	44.						0.	3.	5.	6.	-15.	0.	4.	6.	4.	6.	9.	8.	7.	44.	-15.
24	6.	6.	8.	9.	6.	4.	2.	3.	5.	4.	6.	5.	5.	5.	5.	6.	6.	6.	5.	5.	3.	2.	3.	6.	5.	9.	2.
25	5.	2.	5.	8.	5.	4.	3.	7.	9.	9.	9.	5.	8.	12.	7.	5.	9.	10.	6.	8.	7.	8.	11.	8.	7.	12.	2.
26	5.	5.	6.	5.	4.	7.	7.	6.	8.	6.	6.	6.	6.	5.	5.	4.	5.	16.	1.	6.	7.	5.	6.	4.	6.	16.	1.
27	3.	5.	4.	4.	6.	6.	4.	6.	5.	2.	5.	7.	19.	4.	7.	8.	6.	6.	6.	6.	5.	4.	2.	4.	6.	19.	2.
28	8.	7.	6.	5.	3.	7.	10.	11.	10.	9.	9.	10.	11.	11.	12.	21.	12.	17.	14.	11.	9.	15.	6.	7.	10.	21.	3.
29	7.	5.	5.	3.	2.	7.	7.	6.	5.	5.	5.	4.	5.	6.	3.	2.	4.	3.	3.	4.	5.	8.	8.	6.	5.	8.	2.
30	8.	10.	10.	8.	6.	7.	6.	5.	8.	12.	9.	6.	7.	6.	5.	2.	2.	4.	4.	4.	4.	8.	6.	5.	6.	12.	2.
31	9.	6.	6.	7.	6.	6.	6.	4.	6.	6.	17.	8.	6.	4.	7.	9.	4.	2.	4.	7.	9.	7.	7.	7.	7.	17.	2.
AVG	12.	10.	9.	9.	9.	9.	12.	11.	19.	17.	16.	16.	19.	21.	22.	24.	27.	24.	23.	23.	24.	32.	22.	15.	18.		
MAX	37.	42.	27.	31.	24.	33.	44.	38.	136.	131.	82.	121.	79.	82.	109.	133.	164.	94.	140.	89.	156.	490.	130.	54.		490.	
MIN	2.	2.	1.	1.	2.	4.	0.	3.	4.	2.	2.	2.	0.	3.	3.	2.	-15.	0.	1.	4.	3.	2.	2.	4.			-15.

TOTAL HOURS = 744 NUMBER OF GOOD HOURS = 730 NUMBER OF MISSING HOURS = 14 DATA CAPTURE = 98.12 (PERCENT)

PM-10 µg/m3		DATE (DAY,HOUR)				DATE (DAY,HOUR)	
MONTHLY AVERAGE	18.						
-- 1HR AVERAGE --				-- 8HR RUNNING AVERAGE --			
HIGHEST AVERAGE	490.	1	22	HIGHEST AVERAGE	146.	1	23
2ND HIGHEST AVG.	164.	4	17	2ND HIGHEST AVG.	144.	1	22
-- 3HR RUNNING AVERAGE --				-- 24HR RUNNING AVERAGE --			
HIGHEST AVERAGE	246.	1	23	HIGHEST AVERAGE	68.	4	17
2ND HIGHEST AVG.	236.	1	22	2ND HIGHEST AVG.	67.	4	18

Wainwright Near-Term Air Quality Monitoring Program - Wainwright, Alaska
AUGUST 2009

PM-2.5 - µg/m3

HOURS (LST)

HR-BEG	00	01	02	03	04	05	06	07	08	09	10	11	12	13	14	15	16	17	18	19	20	21	22	23			
HR-END	01	02	03	04	05	06	07	08	09	10	11	12	13	14	15	16	17	18	19	20	21	22	23	24			
DAY																									AVG/	MAX/	MIN
1	17.	9.	15.	10.	12.	9.	9.	9.	10.	8.	2.	1.	1.	3.	4.	6.	6.	5.	5.	4.	8.	38.	10.	5.	9.	38.	1.
2	0.	3.	3.	-1.	2.	5.	3.	2.	3.	6.	2.	0.	2.	1.	3.	4.	3.	3.	13.	6.	5.	3.	2.	3.	3.	13.	-1.
3	3.	1.	0.	4.	4.	1.	1.	3.	6.	9.	5.	4.	7.	7.	6.	7.	6.	6.	10.	10.	14.	7.	9.	8.	6.	14.	0.
4	2.	1.	1.	0.	-1.	1.	1.	-1.	2.	5.	5.	12.	10.	9.	8.	9.	11.	11.	10.	5.	1.	4.	7.	12.	5.	12.	-1.
5	1.	4.	3.	-2.	-1.	1.	1.	0.	3.	2.	0.	0.	2.	3.	2.	4.	1.	2.	2.	2.	2.	1.	4.	6.	2.	6.	-2.
6	4.	3.	3.	3.	1.	2.	2.	1.	1.	6.	9.	8.	7.	5.	7.	7.	6.	2.	2.	6.	6.	2.	1.	3.	4.	9.	1.
7	2.	3.	1.	-1.	0.	2.	2.	2.	4.	6.	5.	3.	5.	7.	9.	13.	5.	6.	7.	5.	4.	4.	5.	8.	4.	13.	-1.
8	5.	4.	5.	2.	3.	1.	2.	4.	2.	3.	3.	-1.	0.	2.	3.	0.	2.	6.	6.	6.	5.	3.	2.	2.	3.	6.	-1.
9	4.	5.	3.	2.	0.	1.	2.	2.	3.	3.	1.	3.	16.	4.	6.	6.	3.	4.	3.	3.	4.	1.	2.	2.	3.	16.	0.
10	1.	-1.	0.	3.	0.	-2.	1.	2.	0.	-2.	0.	2.	-1.	0.	1.	-1.	-3.	-4.	-1.	-1.	-2.	-2.	1.	3.	0.	3.	-4.
11	1.	1.	1.	-1.	-1.	-2.	1.	1.	0.	2.	1.	1.	3.	5.	2.	2.	3.	3.	1.	1.	1.	0.	1.	0.	1.	5.	-2.
12	1.	2.	4.	4.	-1.	-4.	-3.	0.	0.	-2.	-2.	0.	2.	1.	0.	0.	-1.	2.	1.	4.	5.	5.	2.	0.	1.	5.	-4.
13	2.	5.	1.	0.	0.	0.	0.	-1.	0.	0.	3.	4.	0.	1.	3.	2.	4.	3.	3.	0.	1.	3.	1.	1.	2.	5.	-1.
14	0.	-1.	-2.	-1.	-1.	0.	3.	0.	-1.	0.	0.	3.	4.	3.	5.	5.	1.	2.	2.	2.	5.	5.	4.	5.	2.	5.	-2.
15	4.	1.	5.	13.	6.	8.	7.	5.	5.	6.	7.	6.	8.	8.	5.	13.	3.	3.	3.	0.	3.	5.	6.	9.	6.	13.	0.
16	3.	3.	3.	0.	1.	1.	3.	4.	4.	4.	3.	3.	2.	2.	3.	7.	7.	6.	3.	6.	9.	5.	4.	3.	4.	9.	0.
17	4.	4.	-1.	-2.	1.	3.	4.	3.	3.	1.	3.	6.	4.	2.	3.	4.	6.	6.	4.	4.	6.	7.	7.	6.	4.	7.	-2.
18	23.	0.	4.	4.	3.	7.	8.	6.	5.	8.	8.	6.	6.	9.	7.	7.	8.	7.	7.	7.	5.	13.	6.	8.	7.	23.	0.
19	9.	7.	7.	7.	4.	4.	5.	5.	3.	3.	4.	3.	2.	0.	1.	3.	2.	1.	2.	2.	2.	2.	0.	1.	3.	9.	0.
20	5.	6.	4.	0.	-2.	-1.	1.	-2.				-5.	-3.	-1.	-4.	-3.	-2.	1.	3.	4.	4.	1.	2.	-1.	0.	6.	-5.
21	1.	1.	-1.	4.	6.	4.							-3.	-1.	3.	5.	4.	4.	5.	3.	2.	-2.	-2.	1.	2.	6.	-3.
22	0.	2.	2.	-1.	1.	3.	0.	1.	2.	1.	0.	-3.	0.	3.	2.	2.	3.	3.	1.	2.	1.	0.	3.	5.	1.	5.	-3.
23	4.	-1.	-2.	-1.	0.	1.	2.									-1.	1.	1.	1.	3.	4.	2.	-1.	0.	1.	4.	-2.
24		-2.	0.	1.	-1.	-1.	0.	1.	3.	1.	-2.	-2.	-1.	0.	0.	2.	1.	1.	1.	-1.	-4.	-2.	2.	2.	0.	3.	-4.
25	2.	4.	3.	1.	1.	-3.	-3.	-1.	-1.	2.	-1.	-2.	1.	1.	0.	2.	2.	2.	4.	1.	-1.	2.	0.	-1.	1.	4.	-3.
26	1.	1.	1.	2.	1.	3.	2.	0.	4.	2.	-1.	-2.	1.	2.	2.	1.	-1.	-1.	-2.	-2.	-1.	4.	4.	2.	1.	4.	-2.
27	1.	0.	-1.	-1.	0.	3.	3.	-1.	-1.	0.	2.	2.	0.	-3.	-4.	0.	2.	-1.	-1.	2.	5.	4.	3.	5.	1.	5.	-4.
28	4.	4.	2.	1.	1.	2.	5.	4.	3.	3.	3.	3.	0.	2.	3.	-1.	1.	3.	1.	-1.	1.	3.	4.	4.	2.	5.	-1.
29	2.	2.	1.	0.	-2.	-1.	0.	1.	3.	4.	7.	3.	2.	2.	0.	1.	2.	-1.	2.	5.	1.	0.	2.	1.	2.	7.	-2.
30	5.	5.	3.	3.	1.	2.	0.	1.	3.	3.	3.	2.	0.	1.	1.	3.	5.	6.	2.	0.	3.	3.	6.	9.	3.	9.	0.
31	14.	5.	16.	12.	7.	5.	4.	4.	-1.	-3.	4.	5.	2.	2.	3.	4.	2.	2.	5.	3.	1.	3.	2.	2.	4.	16.	-3.
AVG	4.	3.	3.	2.	1.	2.	2.	2.	2.	3.	3.	2.	3.	3.	3.	4.	3.	3.	3.	3.	3.	4.	3.	4.	3.		
MAX	23.	9.	16.	13.	12.	9.	9.	9.	10.	9.	9.	12.	16.	9.	9.	13.	11.	11.	13.	10.	14.	38.	10.	12.		38.	
MIN	0.	-2.	-2.	-2.	-2.	-4.	-3.	-2.	-1.	-3.	-2.	-5.	-3.	-3.	-4.	-3.	-3.	-4.	-2.	-2.	-4.	-2.	-2.	-1.			-5.

TOTAL HOURS = 744 NUMBER OF GOOD HOURS = 726 NUMBER OF MISSING HOURS = 18 DATA CAPTURE = 97.58 (PERCENT)

PM-2.5 µg/m3		DATE (DAY,HOUR)				DATE (DAY,HOUR)	
MONTHLY AVERAGE	3.						
-- 1HR AVERAGE --				-- 8HR RUNNING AVERAGE --			
HIGHEST AVERAGE	38.	1	22	HIGHEST AVERAGE	12.	1	6
2ND HIGHEST AVG.	23.	18	1	2ND HIGHEST AVG.	12.	1	7
-- 3HR RUNNING AVERAGE --				-- 24HR RUNNING AVERAGE --			
HIGHEST AVERAGE	19.	1	23	HIGHEST AVERAGE	9.	1	23
2ND HIGHEST AVG.	18.	1	24	2ND HIGHEST AVG.	9.	1	22

Wainwright Near-Term Air Quality Monitoring Program - Wainwright, Alaska
AUGUST 2009

SHELTER TEMPERATURE - DEGREES C

HOURS (LST)

HR-BEG	00	01	02	03	04	05	06	07	08	09	10	11	12	13	14	15	16	17	18	19	20	21	22	23			
HR-END	01	02	03	04	05	06	07	08	09	10	11	12	13	14	15	16	17	18	19	20	21	22	23	24			
DAY																									AVG/	MAX/	MIN
1	26.1	25.9	26.1	26.1	26.0	26.0	26.0	25.9	25.9	25.8	25.9	26.0	26.2	26.3	26.4	26.7	27.2	27.7	28.1	28.3	28.2	27.7	27.3	26.9	26.6	28.3	25.8
2	26.7	26.5	26.5	26.3	26.3	26.4	26.3	26.0	26.0	26.0	26.1	26.1	26.2	26.3	26.4	26.4	26.5	26.5	26.6	26.6	26.6	26.6	26.5	26.4	26.4	26.7	26.0
3	26.3	26.2	26.7	26.4	26.2	26.1	26.3	26.3	26.4	26.4	26.4	26.5	26.6	26.7	26.8	27.0	27.3	28.1	27.7	27.2	27.0	26.9	26.8	26.7	26.7	28.1	26.1
4	26.6	26.4	26.4	26.3	26.3	26.2	26.1	26.2	26.4	26.6	26.5	26.7	26.8	27.1	27.7	28.1	28.6	29.0	29.8	29.2	28.6	27.7	27.2	27.0	27.2	29.8	26.1
5	24.8	23.4	22.6	22.5	22.2	22.1	21.9	22.0	21.9	21.8	21.8	21.8	21.9	22.1	22.4	22.8	23.1	23.3	23.9	24.1	24.4	24.6	24.0	23.6	22.9	24.8	21.8
6	23.3	23.0	22.8	22.9	23.0	23.0	23.1	23.2	22.9	23.1	23.4	23.4	25.2	24.2	25.2	26.2	25.6	25.2	25.1	25.4	26.5	25.7	24.3	23.7	24.1	26.5	22.8
7	23.1	22.6	22.2	22.1	21.9	21.8	21.8	21.9	21.9	22.0	21.9	22.0	21.8	22.0	23.3	24.4	25.4	25.9	26.6	26.9	27.1	26.8	26.5	26.2	23.7	27.1	21.8
8	25.0	24.1	23.9	23.7	23.6	23.5	23.5	23.5	23.5	23.5	23.5	23.4	23.3	23.3	23.3	23.2	23.3	23.8	25.1	25.9	26.3	26.4	26.5	26.4	24.2	26.5	23.2
9	26.5	26.4	26.0	25.9	26.0	25.9	25.8	26.0	26.2	26.5	26.2	26.0	26.1	26.3	26.4	26.6	26.6	26.8	27.1	27.1	27.1	27.1	27.2	27.1	26.5	27.2	25.8
10	26.6	25.3	24.4	24.7	24.4	24.3	24.3	24.3	24.3	24.3	24.3	24.4	24.4	24.4	24.5	24.5	24.5	24.5	24.5	24.6	24.5	24.4	24.3	24.3	24.5	26.6	24.3
11	24.3	24.2	24.3	24.3	24.3	24.3	24.2	24.2	24.2	24.3	24.3	24.4	24.5	24.6	24.7	24.9	25.2	25.1	25.0	25.6	26.0	26.0	26.1	26.0	24.8	26.1	24.2
12	26.2	25.2	24.9	24.7	24.6	24.6	24.6	24.6	24.6	24.6	24.7	24.7	24.7	24.7	24.8	24.8	24.8	24.7	24.7	24.7	25.0	25.7	26.1	25.9	24.9	26.2	24.6
13	25.6	24.8	24.7	24.5	24.4	24.4	24.3	24.7	24.6	24.5	24.4	24.6	24.6	24.5	24.5	24.5	24.6	24.7	25.3	25.2	24.7	24.5	24.8	25.1	24.7	25.6	24.3
14	25.3	25.6	26.2	26.6	27.0	27.4	27.7	27.8	27.6	27.9	27.6	27.8	27.5	27.8	28.3	28.4	27.6	27.7	27.8	28.2	28.0	28.0	28.1	28.4	27.5	28.4	25.3
15	28.4	28.1	27.9	27.7	27.4	27.3	27.1	26.9	26.9	26.9	26.8	26.9	27.0	27.2	27.5	27.8	27.9	27.8	27.8	27.9	28.3	28.5	28.5	28.1	27.6	28.5	26.8
16	27.8	27.5	27.7	28.1	28.4	28.5	28.7	28.4	28.2	28.0	27.9	27.9	27.8	27.6	26.6	26.4	26.8	27.0	27.1	27.0	26.8	27.1	27.4	27.6	27.6	28.7	26.4
17	27.7	27.6	26.4	28.0	28.1	28.1	28.3	28.4	28.5	28.5	28.6	28.8	28.8	28.8	28.9	28.8	28.9	29.2	29.6	29.5	29.7	29.2	28.7	28.3	28.6	29.7	26.4
18	27.9	27.6	27.5	27.2	27.0	26.8	26.6	26.4	26.3	26.2	26.3	26.3	26.4	26.6	26.9	27.3	27.7	28.0	27.8	27.7	27.5	27.0	26.7	26.5	27.0	28.0	26.2
19	26.6	26.7	26.8	26.8	26.9	27.0	27.1	27.2	27.2	27.3	27.5	27.5	27.4	27.0	27.0	27.7	28.3	29.7	31.0	31.5	30.8	30.2	29.9	29.8	28.1	31.5	26.6
20	29.7	29.7	29.7	29.7	29.6	29.5	29.4	29.4	28.6	26.0	26.1	28.1	28.5	28.4	29.9	30.7	30.1	30.3	30.4	30.9	30.7	30.1	29.9	29.9	29.4	30.9	26.0
21	29.8	29.7	30.2	30.3	30.4	30.7	30.9	31.0	29.0	26.5	26.5	28.5	29.6	30.2	30.8	31.1	31.1	31.1	31.1	31.0	30.9	30.8	30.8	30.5	30.1	31.1	26.5
22	30.3	30.3	30.4	30.4	30.4	30.4	30.4	30.4	30.4	30.4	30.5	30.3	30.3	30.8	31.1	31.2	31.7	32.1	32.5	32.1	31.6	31.3	30.8	30.0	30.8	32.5	30.0
23	29.2	28.6	28.4	28.4	28.4	28.6	28.6	28.4	26.1	24.2	22.8	22.5	24.6	26.5	28.0	29.2	30.1	31.1	31.7	32.1	31.8	31.2	30.6	30.3	28.4	32.1	22.5
24	29.9	29.6	29.1	29.5	29.3	29.2	29.1	29.1	29.2	29.3	29.5	29.6	29.9	29.9	30.0	30.2	30.3	30.8	31.4	31.1	30.5	29.9	29.9	29.6	29.8	31.4	29.1
25	29.7	29.7	29.4	29.1	28.8	28.6	28.8	29.0	29.1	29.2	29.3	29.5	29.7	30.0	30.4	31.0	31.4	31.2	30.8	30.4	30.1	29.9	29.7	29.4	29.8	31.4	28.6
26	29.3	29.3	29.4	29.3	29.1	29.0	28.9	28.7	28.7	28.7	28.7	28.8	28.9	28.9	28.9	28.9	28.7	28.7	28.6	28.9	29.2	29.3	29.4	29.4	29.0	29.4	28.6
27	29.4	29.4	29.5	29.5	29.4	29.3	29.2	28.9	29.1	29.4	29.5	29.8	30.1	30.4	30.6	30.6	30.3	30.2	30.5	30.8	31.2	31.1	31.0	30.9	30.0	31.2	28.9
28	30.8	30.8	30.8	30.4	30.2	29.9	29.6	29.4	29.3	29.3	29.2	29.2	29.1	29.2	29.2	29.2	29.2	29.1	29.0	28.9	28.8	28.7	28.7	28.9	29.5	30.8	28.7
29	29.0	29.0	29.3	29.2	29.0	28.8	28.6	28.4	28.2	28.1	28.0	27.9	27.9	27.9	27.9	28.0	28.0	28.1	28.3	28.4	28.3	28.1	28.0	28.0	28.3	29.3	27.9
30	27.8	27.6	27.8	27.9	28.0	28.1	28.3	28.4	28.2	27.8	27.6	27.6	27.6	28.0	28.3	28.5	28.6	28.7	28.5	28.4	28.2	27.9	27.6	27.4	28.0	28.7	27.4
31	27.0	26.7	28.1	26.6	26.2	26.0	25.8	25.9	26.0	26.2	26.4	26.7	27.2	27.5	27.9	28.3	28.8	29.7	30.7	30.2	29.7	29.7	29.5	29.0	27.7	30.7	25.8
AVG	27.3	27.0	27.0	26.9	26.9	26.8	26.8	26.8	26.6	26.4	26.4	26.6	26.8	26.9	27.2	27.5	27.7	27.9	28.2	28.3	28.2	28.0	27.8	27.7	27.2		
MAX	30.8	30.8	30.8	30.4	30.4	30.7	30.9	31.0	30.4	30.4	30.5	30.3	30.3	30.8	31.1	31.2	31.7	32.1	32.5	32.1	31.8	31.3	31.0	30.9		32.5	
MIN	23.1	22.6	22.2	22.1	21.9	21.8	21.8	21.9	21.9	21.8	21.8	21.8	21.8	22.0	22.4	22.8	23.1	23.3	23.9	24.1	24.4	24.4	24.0	23.6			21.8

TOTAL HOURS = 744 NUMBER OF GOOD HOURS = 744 NUMBER OF MISSING HOURS = 0 DATA CAPTURE = 100.00 (PERCENT)

SHELTER TEMPERATURE DEGREES C		DATE (DAY,HOUR)	
MONTHLY AVERAGE	27.2		
MONTHLY MAXIMUM	32.5	22	19
MONTHLY MINIMUM	21.8	5	10

Wainwright Near-Term Air Quality Monitoring Program - Wainwright, Alaska
August 2009

PM_{10} and $PM_{2.5}$ – µg/m^3

Date			Concentration (Actual)	
Year	**Month**	**Day**	**PM_{10}**	**$PM_{2.5}$**
2009	8	1	64	9
2009	8	2	32	3
2009	8	3	57	6
2009	8	4	54	5
2009	8	5	23	2
2009	8	6	30	4
2009	8	7	14	4
2009	8	8	9	3
2009	8	9	14	3
2009	8	10	6	0
2009	8	11	12	1
2009	8	12	17	1
2009	8	13	8	2
2009	8	14	9	2
2009	8	15	16	6
2009	8	16	16	4
2009	8	17	20	4
2009	8	18	28	7
2009	8	19	23	3
2009	8	20	10	0
2009	8	21	20	2
2009	8	22	11	1
2009	8	23	7	Invalid
2009	8	24	5	0
2009	8	25	7	1
2009	8	26	6	1
2009	8	27	6	1
2009	8	28	10	2
2009	8	29	5	2
2009	8	30	6	3
2009	8	31	7	4
Average			18	3
Maximum			64	9
Minimum			5	0

Wainwright Near-Term Air Quality Monitoring Program - Wainwright, Alaska
SEPTEMBER 2009

10-M HORZ WS - M/S

HOURS (LST)

HR-BEG	00	01	02	03	04	05	06	07	08	09	10	11	12	13	14	15	16	17	18	19	20	21	22	23			
HR-END	01	02	03	04	05	06	07	08	09	10	11	12	13	14	15	16	17	18	19	20	21	22	23	24			
DAY																									AVG/	MAX/	MIN
1	7.	7.	8.	9.	9.	7.	8.	9.	7.	8.	9.	9.	8.	9.	5.	6.	6.	6.	5.	4.	4.	4.	4.	3.	7.	9.	3.
2	3.	3.	3.	4.	3.	3.	3.	3.	3.	3.	4.	3.	4.	3.	3.	3.	2.	3.	4.	6.	4.	5.	4.	4.	3.	6.	2.
3	6.	6.	6.	7.	6.	7.	7.	8.	9.	10.	10.	11.	13.	12.	11.	10.	10.	9.	7.	7.	6.	5.	4.	5.	8.	13.	4.
4	4.	4.	4.	4.	3.	2.	3.	3.	4.	4.	4.	4.	4.	4.	7.	7.	6.	9.	10.	8.	7.	11.	11.	11.	6.	11.	2.
5	13.	11.	11.	11.	10.	11.	10.	8.	6.	7.	7.	7.	6.	4.	4.	4.	5.	4.	5.	4.	4.	4.	4.	4.	7.	13.	4.
6	6.	5.	5.	5.	6.	6.	6.	6.	6.	5.	8.	4.	4.	6.	4.	4.	5.	4.	4.	4.	4.	3.	3.	3.	5.	8.	3.
7	2.	1.	2.	2.	1.	1.	1.	1.	1.	2.	3.	3.	3.	4.	4.	4.	4.	3.	4.	3.	3.	3.	3.	3.	3.	4.	1.
8	4.	3.	4.	4.	4.	5.	6.	4.	4.	6.	7.	8.	9.	7.	9.	9.	8.	8.	7.	9.	9.	8.	8.	7.	7.	9.	3.
9	10.	8.	8.	9.	8.	8.	8.	8.	9.	10.	9.	9.	9.	8.	10.	10.	8.	8.	8.	7.	7.	6.	6.	5.	8.	10.	5.
10	4.	4.	4.	4.	4.	4.	3.	3.	3.	3.	3.	2.	1.	3.	3.	3.	2.	3.	3.	3.	3.	2.	2.	3.	3.	4.	1.
11	3.	4.	4.	4.	4.	4.	3.	3.	3.	2.	3.	3.	4.	3.	5.	6.	5.	4.	4.	4.	4.	4.	4.	3.	4.	6.	2.
12	4.	4.	3.	4.	4.	4.	4.	2.	2.	2.	2.	1.	2.	3.	3.	4.	3.	2.	2.	2.	2.	2.	2.	4.	3.	4.	1.
13	3.	1.	1.	3.	3.	3.	3.	3.	1.	2.	3.	3.	3.	4.	4.	3.	4.	4.	4.	3.	3.	3.	3.	2.	3.	4.	1.
14	3.	2.	3.	2.	2.	2.	3.	3.	3.	6.	4.	6.	6.	6.	6.	5.	4.	7.	5.	6.	5.	6.	5.	6.	4.	7.	2.
15	5.	5.	4.	3.	2.	1.	1.	1.	1.	1.	1.	1.	1.	2.	2.	1.	1.	1.	1.	1.	1.	1.	1.	2.	2.	5.	1.
16	3.	3.	2.	2.	2.	3.	4.	5.	5.	4.	4.	5.	6.	7.	7.	8.	6.	8.	8.	8.	8.	10.	7.	9.	6.	10.	2.
17	8.	7.	9.	9.	10.	10.	9.	10.	8.	10.	11.	10.	10.	10.	10.	10.	11.	9.	9.	8.	7.	8.	9.	8.	9.	11.	7.
18	9.	7.	6.	7.	6.	6.	5.	7.	6.	7.	7.	7.	6.	6.	6.	6.	7.	6.	4.	4.	4.	4.	3.	4.	6.	9.	3.
19	5.	3.	1.	3.	3.	4.	3.	4.	4.	4.	6.	4.	6.	5.	4.	3.	4.	4.	4.	3.	2.	3.	1.	3.	4.	6.	1.
20	4.	4.	4.	4.	4.	5.	6.	8.	6.	5.	7.	5.	7.	7.	7.	7.	4.	7.	5.	7.	9.	8.	8.	8.	6.	9.	4.
21	8.	7.	7.	6.	7.	7.	8.	6.	8.	8.	7.	10.	8.	10.	10.	8.	9.	9.	8.	10.	7.	9.	9.	10.	8.	10.	6.
22	9.	9.	9.	8.	10.	9.	8.	12.	8.	8.	8.	9.	8.	9.	10.	8.	8.	8.	9.	9.	8.	7.	8.	7.	9.	12.	7.
23	8.	7.	7.	7.	6.	7.	6.	5.	4.	3.	4.	6.	6.	4.	4.	4.	4.	6.	4.	4.	5.	4.	1.	1.	5.	8.	1.
24	1.	1.	1.	1.	1.	1.	1.	1.	1.	3.	3.	3.	2.	3.	4.	3.	3.	3.	2.	3.	1.	1.	2.	2.	2.	4.	1.
25	3.	4.	4.	4.	3.	2.	3.	2.	1.	3.	3.	3.	4.	4.	3.	3.	2.	2.	2.	1.	2.	2.	2.	2.	3.	4.	1.
26	2.	2.	1.	4.	4.	2.	3.	3.	3.	3.	3.	4.	1.	4.	4.	4.	3.	3.	3.	4.	4.	4.	3.	2.	3.	4.	1.
27	2.	2.	3.	4.	3.	4.	3.	1.	2.	3.	2.	3.	3.	3.	3.	3.	3.	3.	2.	3.	3.	2.	2.	1.	3.	4.	1.
28	1.	2.	3.	3.	3.	3.	3.	3.	3.	3.	4.	4.	4.	3.	2.	3.	3.	2.	3.	3.	3.	3.	4.	2.	3.	4.	1.
29	2.	3.	3.	2.	3.	1.	2.	3.	1.	3.	2.	3.	5.	6.	6.	7.	8.	7.	7.	7.	8.	5.	6.	7.	4.	8.	1.
30	4.	4.	4.	6.	3.	3.	4.	3.	4.	6.	5.	5.	4.	6.	5.	6.	6.	5.	6.	5.	6.	5.	6.	4.	5.	6.	3.
AVG	5.	4.	4.	5.	5.	5.	5.	5.	4.	5.	5.	5.	5.	6.	6.	5.	5.	5.	5.	5.	5.	5.	5.	5.	5.		
MAX	13.	11.	11.	11.	10.	11.	10.	12.	9.	10.	11.	11.	13.	12.	11.	10.	11.	9.	10.	10.	9.	11.	11.	11.		13.	
MIN	1.	1.	1.	1.	1.	1.	1.	1.	1.	1.	1.	1.	1.	2.	2.	1.	1.	1.	1.	1.	1.	1.	1.	1.			1.

TOTAL HOURS = 720 NUMBER OF GOOD HOURS = 720 NUMBER OF MISSING HOURS = 0 DATA CAPTURE = 100.00 (PERCENT)

10-M HORZ WS M/S		DATE (DAY,HOUR)	
MONTHLY AVERAGE	5.		
MONTHLY MAXIMUM	13.	3	13
MONTHLY MINIMUM	1.	7	2

Wainwright Near-Term Air Quality Monitoring Program - Wainwright, Alaska
SEPTEMBER 2009

10-M WIND DIRECTION - DEGREES

HOURS (LST)

HR-BEG	00	01	02	03	04	05	06	07	08	09	10	11	12	13	14	15	16	17	18	19	20	21	22	23
HR-END	01	02	03	04	05	06	07	08	09	10	11	12	13	14	15	16	17	18	19	20	21	22	23	24
DAY																								
1	150	170	190	200	210	200	210	200	200	203	207	210	220	210	220	230	220	220	230	220	210	200	200	220
2	200	240	260	290	290	300	295	290	270	270	290	320	290	280	270	250	280	260	260	250	240	250	240	220
3	220	220	230	220	200	200	210	200	210	210	210	210	230	230	250	260	270	270	280	300	300	290	280	270
4	260	260	270	280	290	270	220	170	160	170	170	170	150	220	210	220	220	210	220	220	220	210	210	210
5	210	210	210	220	220	230	250	270	270	290	290	290	300	290	290	290	300	300	310	300	300	290	290	290
6	290	290	290	250	280	270	260	280	270	270	270	260	270	310	330	330	340	320	330	300	310	340	350	347
7	343	340	25	70	10	110	83	57	30	20	10	70	30	40	50	30	50	90	70	80	40	50	50	50
8	60	50	60	60	60	60	60	50	60	60	70	70	60	70	80	70	70	70	70	70	70	70	70	70
9	80	70	70	70	70	70	70	70	70	70	70	80	80	90	80	70	80	90	80	90	80	90	90	70
10	70	60	70	60	70	60	60	70	70	90	90	40	360	350	350	360	340	340	340	330	340	320	310	340
11	300	320	310	320	320	340	330	310	320	320	340	330	330	350	330	340	340	350	350	360	10	360	360	10
12	10	20	20	30	30	40	30	40	60	43	27	10	20	360	360	10	30	30	30	28	25	23	20	20
13	30	50	360	10	350	350	340	360	20	20	360	10	350	350	350	360	10	20	30	40	30	40	40	50
14	110	80	70	70	90	90	60	60	70	90	100	110	90	90	120	120	120	130	110	110	110	110	100	120
15	130	140	150	190	180	160	145	130	115	100	183	267	350	310	310	290	340	270	200	130	60	60	50	60
16	40	40	70	60	50	50	30	40	40	40	40	40	30	20	30	30	30	30	30	30	30	30	30	30
17	30	20	10	20	20	20	10	10	20	20	20	20	10	20	10	20	10	20	20	20	20	20	30	20
18	30	30	40	30	30	40	30	30	30	40	20	30	30	40	20	30	20	40	30	30	30	40	40	30
19	30	30	50	40	70	60	60	60	60	60	70	70	60	30	40	70	60	40	30	50	50	90	70	80
20	90	80	90	100	80	90	100	90	80	90	80	80	100	90	90	90	70	70	70	70	70	60	60	60
21	60	60	70	70	60	60	70	60	60	60	60	60	60	60	60	50	50	50	60	60	50	50	40	60
22	40	50	40	50	50	60	40	30	50	50	40	50	50	40	40	50	40	40	40	40	40	40	30	40
23	30	40	40	30	40	40	30	40	40	50	30	20	30	60	30	30	30	10	10	20	360	30	40	50
24	80	110	140	170	200	230	220	240	260	270	270	280	240	250	260	270	230	260	260	290	250	260	200	140
25	110	130	150	160	130	100	140	170	230	210	240	270	280	300	360	20	10	10	10	10	7	4	1	360
26	350	20	360	360	350	360	20	10	340	315	290	270	10	20	360	360	340	330	327	323	320	330	320	310
27	270	230	230	240	230	200	190	310	320	240	280	220	240	250	320	360	360	320	340	300	290	290	260	260
28	280	250	220	210	200	170	170	180	180	180	180	160	150	180	130	140	120	110	100	100	100	120	120	120
29	80	80	60	90	80	80	100	110	110	110	100	80	100	100	90	90	90	80	90	90	100	100	90	90
30	100	80	90	60	80	90	80	80	60	80	100	90	60	70	70	60	80	80	100	70	80	80	80	90

TOTAL HOURS = 720 NUMBER OF GOOD HOURS = 720 NUMBER OF MISSING HOURS = 0 DATA CAPTURE = 100.00 (PERCENT)

Wainwright Near-Term Air Quality Monitoring Program - Wainwright, Alaska
SEPTEMBER 2009

10-M TEMPERATURE - DEGREES C

HOURS (LST)

HR-BEG	00	01	02	03	04	05	06	07	08	09	10	11	12	13	14	15	16	17	18	19	20	21	22	23			
HR-END	01	02	03	04	05	06	07	08	09	10	11	12	13	14	15	16	17	18	19	20	21	22	23	24			
DAY																									AVG/	MAX/	MIN
1	10.6	10.6	10.6	10.0	8.9	8.9	8.9	8.3	6.1	7.2	7.2	7.8	8.3	8.3	8.3	8.3	8.3	7.8	7.8	7.8	7.2	6.7	6.7	6.1	8.2	10.6	6.1
2	6.1	6.7	6.7	6.1	6.1	6.1	6.1	6.1	6.1	6.1	6.1	5.6	6.1	6.1	6.1	6.1	6.1	6.1	6.1	5.6	5.0	5.0	5.0	5.0	5.9	6.7	5.0
3	5.0	5.0	5.6	5.6	5.0	5.0	5.0	5.6	5.6	6.7	7.2	8.3	8.3	8.9	8.9	8.3	7.2	6.7	6.7	6.1	5.6	5.6	5.6	5.6	6.4	8.9	5.0
4	5.6	5.6	5.6	5.6	5.6	5.6	5.6	5.6	5.6	6.1	6.7	8.3	9.4	12.8	13.9	13.9	13.3	13.3	12.8	11.7	10.6	11.1	10.6	10.6	9.0	13.9	5.6
5	10.6	10.0	10.0	9.4	8.9	9.4	8.9	7.2	6.7	6.1	6.1	6.1	6.1	6.1	5.6	5.0	4.4	4.4	4.4	4.4	3.9	3.3	3.3	3.3	6.4	10.6	3.3
6	2.2	2.2	2.2	2.2	2.8	3.3	3.3	3.3	3.3	3.9	4.4	4.4	4.4	4.4	3.9	4.4	3.9	3.3	3.3	2.8	2.8	2.8	2.8	2.2	3.3	4.4	2.2
7	1.7	1.7	2.2	0.6	0.6	0.0	0.0	1.7	1.7	2.2	2.8	2.2	2.8	3.3	3.3	3.3	3.9	3.9	2.8	2.8	0.6	0.0	-0.6	-1.1	1.8	3.9	-1.1
8	0.6	0.0	-0.6	0.6	0.6	0.6	0.6	0.6	1.1	2.2	2.8	3.3	3.3	3.9	3.9	3.9	3.9	3.3	2.8	2.8	2.8	2.8	2.2	1.7	2.1	3.9	-0.6
9	1.7	1.7	1.1	1.1	1.1	1.1	1.1	1.1	1.1	1.7	2.2	3.3	3.3	3.3	3.9	4.4	3.9	4.4	3.9	2.8	2.8	2.2	1.7	1.1	2.3	4.4	1.1
10	0.6	0.0	0.0	-0.6	-1.1	-1.7	-1.1	-0.6	0.6	1.7	2.2	3.3	3.9	3.9	3.9	3.9	3.3	3.3	3.3	3.3	3.3	3.3	3.3	3.3	1.9	3.9	-1.7
11	3.3	3.3	3.3	3.3	3.9	3.3	3.9	3.9	3.9	3.9	3.9	3.9	4.4	4.4	4.4	3.9	3.9	3.9	3.9	3.3	3.3	3.3	3.3	2.8	3.7	4.4	2.8
12	2.8	2.8	2.8	2.8	2.8	2.2	2.2	2.2	1.7	1.1	0.6	1.7	1.7	2.2	2.8	2.8	2.8	2.8	3.3	2.8	2.8	2.8	2.8	2.8	2.4	3.3	0.6
13	2.8	2.8	2.8	3.3	3.3	3.3	3.3	3.3	3.3	3.3	3.9	3.9	4.4	4.4	4.4	4.4	4.4	3.9	3.9	2.8	2.8	2.8	2.8	2.8	3.5	4.4	2.8
14	1.1	0.0	0.6	0.6	0.0	-0.6	-1.1	-0.6	1.1	2.8	3.3	5.0	3.9	5.0	5.6	6.7	6.7	5.6	5.0	4.4	3.9	2.8	2.8	2.2	2.8	6.7	-1.1
15	2.2	2.2	1.7	1.7	1.1	0.6	1.1	1.1	1.1	1.7	2.2	3.3	3.9	4.4	4.4	4.4	5.0	4.4	4.4	3.9	3.9	3.9	3.3	3.3	2.9	5.0	0.6
16	3.3	3.3	3.3	3.3	3.3	3.3	3.3	3.3	3.3	3.9	3.9	3.9	4.4	3.9	3.9	3.3	3.3	2.8	2.2	2.2	2.2	2.2	1.7	1.7	3.1	4.4	1.7
17	1.7	2.2	2.2	2.2	2.2	2.2	2.2	2.8	2.8	3.3	3.9	3.3	3.9	3.9	3.9	3.3	3.9	3.3	3.3	3.3	3.3	3.3	3.3	3.3	3.0	3.9	1.7
18	3.3	3.3	3.3	3.3	3.3	3.3	3.3	3.3	3.3	3.3	3.3	2.8	3.3	3.3	3.9	3.3	3.3	3.3	3.3	3.3	2.8	2.8	2.2	2.2	3.2	3.9	2.2
19	2.2	2.2	1.7	2.2	1.7	1.7	1.1	1.1	1.1	1.7	2.8	3.9	3.3	3.3	2.8	2.2	2.2	1.7	1.1	0.0	0.0	0.0	0.0	0.0	1.7	3.9	0.0
20	0.0	0.0	-0.6	-0.6	-0.6	-0.6	-0.6	-1.1	-1.1	-0.6	-0.6	-0.6	-0.6	0.0	0.6	0.6	0.0	0.6	0.0	0.0	-0.6	-1.1	-1.1	-1.7	-0.4	0.6	-1.7
21	-2.2	-2.2	-1.7	-2.2	-1.7	-2.2	-2.8	-2.8	-2.2	-2.2	-2.2	-1.7	-1.7	-1.1	-1.1	-1.1	-1.1	-1.7	-1.1	-1.1	-1.1	-1.1	-1.1	-1.1	-1.7	-1.1	-2.8
22	-1.1	-1.7	-1.7	-1.7	-1.7	-1.7	-1.7	-1.7	-1.7	-1.7	-1.7	-1.1	-1.7	-1.1	-1.7	-1.7	-1.7	-1.7	-1.7	-1.7	-1.7	-1.7	-1.7	-1.7	-1.6	-1.1	-1.7
23	-1.7	-1.7	-1.7	-1.7	-1.7	-2.2	-2.2	-1.7	-2.2	-1.7	-1.7	-1.1	-1.1	-1.1	-1.1	-1.1	-1.1	-0.6	-1.1	-1.1	-1.1	-1.1	-1.1	-1.1	-1.4	-0.6	-2.2
24	-1.1	-1.1	-1.1	-1.1	-1.1	-1.1	-1.1	-1.1	0.0	0.6	0.6	0.0	0.6	1.1	1.1	0.6	0.6	0.6	0.6	0.6	0.6	0.6	0.6	-0.6	0.0	1.1	-1.1
25	-0.6	-1.1	-1.7	-1.7	-1.7	-2.8	-2.2	-2.2	-2.2	-1.7	-0.6	-0.6	0.0	0.0	0.6	0.6	0.6	0.6	0.0	0.0	0.0	0.0	0.0	0.0	-0.7	0.6	-2.8
26	0.0	-0.6	0.0	0.6	0.0	-1.7	-0.6	-1.1	0.0	1.1	1.1	1.1	1.1	1.7	1.1	1.7	1.1	0.6	0.0	0.0	0.0	0.0	0.0	0.0	0.3	1.7	-1.7
27	-0.6	-0.6	-0.6	-0.6	-0.6	-0.6	-1.1	-0.6	-0.6	0.0	0.6	0.6	0.6	1.1	0.6	0.6	1.1	0.6	0.0	0.0	-1.0	-1.1	-1.1	-1.7	-0.2	1.1	-1.7
28	-1.7	-1.7	-2.2	-2.2	-2.8	-1.7	-2.2	-2.8	-2.2	-2.2	-1.7	-1.7	-1.7	-1.7	-1.7	-1.7	-1.7	-1.7	-1.7	-2.8	-2.2	-2.8	-2.8	-3.9	-2.1	-1.7	-3.9
29	-5.6	-6.7	-7.2	-7.8	-7.8	-7.8	-7.8	-6.7	-6.7	-5.0	-4.4	-3.3	-3.3	-3.9	-3.3	-4.4	-5.0	-4.4	-3.9	-3.9	-3.9	-3.9	-3.3	-3.3	-5.1	-3.3	-7.8
30	-2.8	-2.8	-2.8	-2.8	-3.3	-3.3	-3.3	-3.3	-3.3	-3.3	-3.3	-2.8	-2.2	-2.8	-1.7	-1.7	-1.7	-2.8	-3.3	-3.3	-3.9	-3.9	-3.9	-4.4	-3.0	-1.7	-4.4
AVG	1.7	1.5	1.5	1.4	1.2	1.1	1.1	1.1	1.2	1.7	2.1	2.4	2.6	2.9	3.0	2.9	2.8	2.6	2.4	2.1	1.8	1.7	1.6	1.3	1.9		
MAX	10.6	10.6	10.6	10.0	8.9	9.4	8.9	8.3	6.7	7.2	7.2	8.3	9.4	12.8	13.9	13.9	13.3	13.3	12.8	11.7	10.6	11.1	10.6	10.6		13.9	
MIN	-5.6	-6.7	-7.2	-7.8	-7.8	-7.8	-7.8	-6.7	-6.7	-5.0	-4.4	-3.3	-3.3	-3.9	-3.3	-4.4	-5.0	-4.4	-3.9	-3.9	-3.9	-3.9	-3.9	-4.4			-7.8

TOTAL HOURS = 720 NUMBER OF GOOD HOURS = 720 NUMBER OF MISSING HOURS = 0 DATA CAPTURE = 100.00 (PERCENT)

10-M TEMPERATURE DEGREES C		DATE (DAY,HOUR)	
MONTHLY AVERAGE	1.9		
MONTHLY MAXIMUM	13.9	4	15
MONTHLY MINIMUM	-7.8	29	4

Wainwright Near-Term Air Quality Monitoring Program - Wainwright, Alaska
SEPTEMBER 2009

NITROGEN OXIDES - PPM

HOURS (LST)

HR-BEG	00	01	02	03	04	05	06	07	08	09	10	11	12	13	14	15	16	17	18	19	20	21	22	23			
HR-END	01	02	03	04	05	06	07	08	09	10	11	12	13	14	15	16	17	18	19	20	21	22	23	24			
DAY																									AVG/	MAX/	MIN
1	0.000	0.000	0.000	0.000	0.000	0.000	0.000	0.000	0.000	0.000	0.001	0.000	0.005	0.008	0.002	0.000	0.000	0.001	0.000	0.001	0.001	0.000	0.000	0.001	0.001	0.008	0.000
2	0.001	0.000	0.000	0.003	0.003	0.002	0.002	0.003	0.002	0.001	0.002	0.002	0.003	0.003	0.001	0.000	0.001	0.000	0.000	0.000	0.000	0.000	0.000	0.000	0.001	0.003	0.000
3	0.001	0.000	0.000	0.000	0.000	0.000	0.000	0.000	0.002	0.001	0.002	0.000	0.001	0.000	0.000	0.000	0.000	0.000	0.000	0.001	0.001	0.002	0.001	0.001	0.001	0.002	0.000
4	0.000	0.000	0.000	0.001	0.005	0.008	0.001	0.003	0.000	0.000	0.000	0.000	0.000	0.000	0.000	0.000	0.001	0.001	0.001	0.000	0.000	0.000	0.000	0.000	0.001	0.008	0.000
5	0.000	0.000	0.000	0.000	0.000	0.000	0.000	0.000	0.000	0.000	0.002	0.000	0.001	0.001	0.000	0.000	0.000	0.001	0.001	0.000	0.001	0.000	0.000	0.000	0.000	0.002	0.000
6	0.000	0.000	0.000	0.000	0.000	0.000	0.000	0.000	0.000	0.000	0.000	0.000	0.000	0.000	0.000	0.000	0.000	0.000	0.000	0.000	0.000	0.000	0.000	0.002	0.000	0.002	0.000
7	0.004	0.000		0.001	0.000	0.002	0.001	0.005	0.001	0.000	0.001	0.006	0.001	0.001	0.000	0.000	0.000	0.000	0.000	0.000	0.000	0.000	0.000	0.000	0.001	0.006	0.000
8	0.000	0.000	0.000	0.000	0.000	0.000	0.000	0.000	0.000	0.001	0.000	0.000	0.002	0.000	0.001	0.000	0.004	0.000	0.000	0.000	0.000	0.000	0.000	0.000	0.000	0.004	0.000
9	0.000	0.000	0.000	0.000	0.000	0.000	0.000	0.000	0.000	0.000	0.000	0.000	0.000	0.000	0.003	0.000	0.000	0.000	0.000	0.000	0.000	0.000	0.000	0.000	0.000	0.003	0.000
10	0.000	0.000	0.000	0.000	0.000		0.000	0.000	0.001	0.000	0.003	0.001	0.002	0.001	0.000	0.004	0.001	0.002	0.000	0.000	0.000	0.000	0.000	0.000	0.001	0.004	0.000
11	0.000	0.001	0.000	0.000	0.000	0.000	0.000	0.001	0.003	0.012	0.001							0.005	0.003	0.012	0.014	0.013	0.014	0.007	0.005	0.014	0.000
12	0.005	0.001	0.000	0.000	0.000	0.000	0.000	0.002	0.002	0.005	0.003	0.001	0.001	0.005	0.007	0.005	0.004	0.001	0.001	0.000	0.000	0.000	0.000	0.000	0.002	0.007	0.000
13	0.000	0.000	0.004	0.001	0.002	0.004	0.001	0.002	0.002	0.001	0.005	0.005	0.008	0.003	0.006	0.007	0.007	0.002	0.000	0.000	0.005	0.000	0.000	0.000	0.003	0.008	0.000
14	0.000	0.000	0.000	0.000	0.001	0.000	0.000	0.001	0.001	0.001	0.001	0.000	0.001	0.001	0.001	0.000	0.000	0.000	0.000	0.000	0.000	0.001	0.001	0.000	0.000	0.001	0.000
15	0.000	0.000	0.000	0.000	0.000	0.000	0.000	0.001	0.004	0.007	0.003	0.004	0.007	0.002	0.006	0.001	0.001	0.002	0.003	0.002	0.000	0.000	0.000	0.000	0.002	0.007	0.000
16	0.000	0.000	0.000	0.000	0.000	0.000	0.000	0.001	0.007	0.001	0.002	0.001	0.001	0.000	0.000	0.001	0.001	0.000	0.000	0.000	0.000	0.000	0.000	0.000	0.001	0.007	0.000
17	0.000	0.001	0.000	0.000	0.000	0.000	0.000	0.001	0.000	0.000	0.000	0.000	0.001	0.052	0.001	0.000	0.000	0.000	0.000	0.000	0.000	0.000	0.000	0.000	0.002	0.052	0.000
18	0.000	0.000		0.000	0.000	0.000	0.000	0.000	0.001	0.003	0.000	0.000	0.001	0.000	0.002	0.000	0.020	0.000	0.000	0.000	0.000	0.000	0.000	0.000	0.001	0.020	0.000
19	0.000	0.000	0.000	0.000	0.000	0.000	0.001	0.000	0.000	0.000	0.000	0.000	0.001	0.000	0.000	0.001	0.001	0.000	0.000	0.000	0.001	0.000	0.001	0.000	0.000	0.001	0.000
20	0.000	0.000	0.000	0.000	0.000	0.000	0.000	0.000	0.000	0.003	0.000	0.000	0.001	0.000	0.000	0.000	0.000	0.001	0.000	0.001	0.000	0.000	0.000	0.000	0.000	0.003	0.000
21	0.000	0.000	0.000	0.000	0.000	0.000	0.000	0.001	0.002	0.007	0.000		0.000	0.000	0.002	0.001	0.000	0.000	0.000	0.001	0.000	0.000	0.000	0.000	0.001	0.007	0.000
22	0.000	0.000	0.000	0.000	0.000	0.000	0.000	0.000	0.001	0.002	0.001	0.000	0.001	0.000	0.000	0.000	0.002	0.000	0.000	0.000	0.000	0.000	0.000	0.000	0.000	0.002	0.000
23	0.000	0.000	0.000	0.000	0.000	0.000	0.000	0.001	0.002	0.001	0.001	0.001	0.001	0.001	0.001	0.002	0.004	0.009	0.010	0.005	0.004	0.002	0.000	0.000	0.002	0.010	0.000
24	0.002	0.002	0.001	0.000	0.003	0.005	0.012		0.001	0.001	0.000	0.000	0.001	0.000	0.001	0.001	0.001	0.000	0.001	0.001	0.001	0.001	0.005	0.002	0.002	0.012	0.000
25	0.000	0.000		0.000	0.000	0.001	0.000	0.000	0.000	0.001	0.001	0.001	0.001	0.001	0.003	0.001	0.000				0.001	0.001	0.002	0.003	0.001	0.003	0.000
26	0.003	0.006	0.006	0.007	0.001	0.001	0.002	0.010	0.004	0.001	0.001	0.000	0.001	0.000	0.007	0.015	0.004	0.000	0.002	0.003	0.002	0.000	0.000	0.001	0.003	0.015	0.000
27	0.001	0.002	0.001	0.001	0.000	0.002	0.001	0.001	0.002	0.001	0.001	0.000	0.000	0.000	0.000	0.002	0.008	0.005	0.001	0.003	0.002	0.002	0.000	0.000	0.002	0.008	0.000
28	0.001	0.001	0.010	0.015	0.003	0.001		0.001	0.002	0.003	0.002	0.001	0.001	0.002	0.001	0.001	0.000	0.000	0.001	0.001	0.000	0.000	0.000	0.000	0.002	0.015	0.000
29	0.000	0.000	0.000	0.000	0.000	0.000	0.000	0.000	0.001	0.002	0.001	0.001	0.000	0.001	0.001	0.001	0.001	0.002	0.002	0.001	0.001	0.001	0.001	0.000	0.001	0.002	0.000
30	0.000	0.000	0.000	0.000	0.000	0.000	0.000	0.000	0.002	0.001	0.001	0.000	0.001	0.001	0.000	0.002	0.002	0.001	0.000	0.000	0.000	0.000	0.000	0.000	0.000	0.002	0.000
AVG	0.001	0.000	0.001	0.001	0.001	0.001	0.001	0.001	0.001	0.002	0.001	0.001	0.002	0.003	0.002	0.002	0.002	0.001	0.001	0.001	0.001	0.001	0.001	0.001	0.001		
MAX	0.005	0.006	0.010	0.015	0.005	0.008	0.012	0.010	0.007	0.012	0.005	0.006	0.008	0.052	0.007	0.015	0.020	0.009	0.010	0.012	0.014	0.013	0.014	0.007		0.052	
MIN	0.000	0.000	0.000	0.000	0.000	0.000	0.000	0.000	0.000	0.000	0.000	0.000	0.000	0.000	0.000	0.000	0.000	0.000	0.000	0.000	0.000	0.000	0.000	0.000			0.000

TOTAL HOURS = 720 NUMBER OF GOOD HOURS = 704 NUMBER OF MISSING HOURS = 16 DATA CAPTURE = 97.78 (PERCENT)

NITROGEN OXIDES PPM		DATE (DAY,HOUR)				DATE (DAY,HOUR)	
MONTHLY AVERAGE	0.001						
-- 1HR AVERAGE --				-- 8HR RUNNING AVERAGE --			
HIGHEST AVERAGE	0.052	17	14	HIGHEST AVERAGE	0.010	11	23
2ND HIGHEST AVG.	0.020	18	17	2ND HIGHEST AVG.	0.010	11	24
-- 3HR RUNNING AVERAGE --				-- 24HR RUNNING AVERAGE --			
HIGHEST AVERAGE	0.018	17	15	HIGHEST AVERAGE	0.005	12	8
2ND HIGHEST AVG.	0.018	17	14	2ND HIGHEST AVG.	0.005	12	9

Wainwright Near-Term Air Quality Monitoring Program - Wainwright, Alaska
SEPTEMBER 2009

NITROGEN DIOXIDE - PPM

HOURS (LST)

HR-BEG	00	01	02	03	04	05	06	07	08	09	10	11	12	13	14	15	16	17	18	19	20	21	22	23			
HR-END	01	02	03	04	05	06	07	08	09	10	11	12	13	14	15	16	17	18	19	20	21	22	23	24			
DAY																									AVG/	MAX/	MIN
1	0.000	0.000	0.000	0.000	0.000	0.000	0.000	0.000	0.000	0.000	0.000	0.000	0.002	0.003	0.001	0.000	0.000	0.000	0.000	0.000	0.001	0.000	0.000	0.000	0.000	0.003	0.000
2	0.000	0.000	0.000	0.002	0.002	0.002	0.002	0.002	0.001	0.001	0.002	0.001	0.002	0.002	0.001	0.000	0.001	0.000	0.000	0.000	0.000	0.000	0.000	0.000	0.001	0.002	0.000
3	0.000	0.000	0.000	0.000	0.000	0.000	0.000	0.000	0.001	0.000	0.001	0.000	0.000	0.000	0.000	0.000	0.000	0.000	0.000	0.001	0.001	0.001	0.001	0.001	0.000	0.001	0.000
4	0.000	0.000	0.000	0.001	0.003	0.004	0.001	0.001	0.000	0.000	0.000	0.000	0.000	0.000	0.000	0.000	0.000	0.000	0.000	0.000	0.000	0.000	0.000	0.000	0.000	0.004	0.000
5	0.000	0.000	0.000	0.000	0.000	0.000	0.000	0.000	0.000	0.000	0.001	0.000	0.001	0.000	0.000	0.000	0.000	0.001	0.001	0.000	0.001	0.000	0.000	0.000	0.000	0.001	0.000
6	0.000	0.000	0.000	0.000	0.000	0.000	0.000	0.000	0.000	0.000	0.000	0.000	0.000	0.000	0.000	0.000	0.000	0.000	0.000	0.000	0.000	0.001	0.000	0.001	0.000	0.001	0.000
7	0.003	0.000		0.001	0.000	0.001	0.000	0.003	0.001	0.000	0.000	0.003	0.000	0.001	0.000	0.000	0.000	0.000	0.000	0.000	0.000	0.000	0.000	0.000	0.001	0.003	0.000
8	0.000	0.000	0.000	0.000	0.000	0.000	0.000	0.000	0.000	0.000	0.000	0.000	0.001	0.000	0.000	0.000	0.001	0.000	0.000	0.000	0.000	0.000	0.000	0.000	0.000	0.001	0.000
9	0.000	0.000	0.000	0.000	0.000	0.000	0.000	0.000	0.000	0.000	0.000	0.000	0.000	0.000	0.002	0.000	0.000	0.000	0.000	0.000	0.000	0.000	0.000	0.000	0.000	0.002	0.000
10	0.000	0.000	0.000	0.000	0.000		0.000	0.000	0.000	0.000	0.002	0.000	0.001	0.000	0.000	0.001	0.001	0.001	0.000	0.000	0.000	0.000	0.000	0.000	0.000	0.002	0.000
11	0.000	0.001	0.000	0.000	0.000	0.000	0.000	0.001	0.002	0.006	0.000							0.003	0.002	0.004	0.006	0.006	0.006	0.003	0.002	0.006	0.000
12	0.003	0.000	0.000	0.000	0.000	0.000	0.000	0.002	0.002	0.003	0.002	0.000	0.001	0.003	0.004	0.003	0.002	0.001	0.001	0.000	0.001	0.000	0.000	0.000	0.001	0.004	0.000
13	0.000	0.000	0.003	0.001	0.001	0.003	0.001	0.002	0.002	0.001	0.003	0.003	0.003	0.002	0.003	0.003	0.003	0.001	0.000	0.000	0.003	0.000	0.000	0.000	0.002	0.003	0.000
14	0.000	0.000	0.000	0.000	0.000	0.000	0.000	0.000	0.001	0.000	0.000	0.000	0.000	0.000	0.000	0.000	0.000	0.000	0.000	0.000	0.000	0.001	0.001	0.000	0.000	0.001	0.000
15	0.000	0.000	0.000	0.000	0.000	0.000	0.000	0.001	0.001	0.002	0.001	0.002	0.003	0.001	0.003	0.001	0.001	0.002	0.002	0.001	0.000	0.000	0.000	0.000	0.001	0.003	0.000
16	0.000	0.000	0.000	0.000	0.000	0.000	0.000	0.001	0.004	0.001	0.001	0.000	0.000	0.000	0.000	0.001	0.001	0.000	0.000	0.000	0.000	0.000	0.000	0.000	0.000	0.004	0.000
17	0.000	0.001	0.000	0.000	0.000	0.000	0.000	0.000	0.000	0.000	0.000	0.000	0.001	0.026	0.001	0.000	0.000	0.000	0.000	0.000	0.000	0.000	0.000	0.000	0.001	0.026	0.000
18	0.000	0.000		0.000	0.000	0.000	0.000	0.000	0.001	0.002	0.000	0.000	0.000	0.000	0.002	0.000	0.003	0.000	0.000	0.000	0.000	0.000	0.000	0.000	0.000	0.003	0.000
19	0.000	0.000	0.000	0.000	0.000	0.000	0.001	0.000	0.000	0.000	0.000	0.000	0.001	0.000	0.000	0.001	0.001	0.000	0.000	0.000	0.000	0.000	0.000	0.000	0.000	0.001	0.000
20	0.000	0.000	0.000	0.000	0.000	0.000	0.000	0.000	0.000	0.001	0.000	0.000	0.000	0.000	0.000	0.000	0.000	0.001	0.000	0.001	0.000	0.000	0.000	0.000	0.000	0.001	0.000
21	0.000	0.000	0.000	0.000	0.000	0.000	0.000	0.001	0.001	0.005	0.000		0.000	0.000	0.001	0.000	0.000	0.000	0.000	0.001	0.000	0.000	0.000	0.000	0.000	0.005	0.000
22	0.000	0.000	0.000	0.001	0.000	0.000	0.000	0.000	0.001	0.001	0.000	0.000	0.000	0.000	0.000	0.000	0.002	0.000	0.000	0.000	0.000	0.000	0.000	0.000	0.000	0.002	0.000
23	0.000	0.000	0.000	0.000	0.000	0.000	0.000	0.001	0.002	0.001	0.001	0.000	0.000	0.000	0.000	0.002	0.002	0.004	0.005	0.003	0.003	0.002	0.000	0.000	0.001	0.005	0.000
24	0.001	0.001	0.001	0.000	0.001	0.002	0.003		0.002	0.001	0.000	0.000	0.001	0.000	0.001	0.001	0.001	0.001	0.001	0.001	0.001	0.001	0.002	0.001	0.001	0.003	0.000
25	0.000	0.000		0.000	0.000	0.000	0.000	0.000	0.000	0.001	0.001	0.001	0.001	0.001	0.002	0.000	0.000				0.001	0.001	0.002	0.002	0.001	0.002	0.000
26	0.002	0.003	0.003	0.003	0.000	0.000	0.001	0.005	0.003	0.001	0.001	0.000	0.001	0.000	0.003	0.005	0.002	0.000	0.002	0.003	0.001	0.000	0.000	0.001	0.002	0.005	0.000
27	0.001	0.001	0.000	0.000	0.000	0.001	0.000	0.001	0.002	0.001	0.001	0.000	0.000	0.000	0.000	0.002	0.004	0.003	0.001	0.003	0.002	0.001	0.000	0.001	0.001	0.004	0.000
28	0.001	0.001	0.003	0.004	0.001	0.000		0.000	0.001	0.001	0.001	0.001	0.001	0.001	0.001	0.000	0.000	0.000	0.001	0.001	0.000	0.000	0.000	0.000	0.001	0.004	0.000
29	0.000	0.000	0.000	0.000	0.000	0.000	0.000	0.000	0.000	0.001	0.000	0.000	0.000	0.001	0.000	0.000	0.001	0.001	0.002	0.001	0.000	0.001	0.001	0.000	0.000	0.002	0.000
30	0.000	0.000	0.000	0.000	0.000	0.000	0.000	0.000	0.001	0.000	0.000	0.000	0.001	0.000	0.000	0.001	0.000	0.000	0.000	0.000	0.000	0.000	0.000	0.000	0.000	0.001	0.000
AVG	0.000	0.000	0.000	0.000	0.000	0.000	0.000	0.001	0.001	0.001	0.001	0.000	0.001	0.001	0.001	0.001	0.001	0.001	0.001	0.001	0.001	0.001	0.000	0.000	0.001		
MAX	0.003	0.003	0.003	0.004	0.003	0.004	0.003	0.005	0.004	0.006	0.003	0.003	0.003	0.026	0.004	0.005	0.004	0.004	0.005	0.004	0.006	0.006	0.006	0.003		0.026	
MIN	0.000	0.000	0.000	0.000	0.000	0.000	0.000	0.000	0.000	0.000	0.000	0.000	0.000	0.000	0.000	0.000	0.000	0.000	0.000	0.000	0.000	0.000	0.000	0.000			0.000

TOTAL HOURS = 720 NUMBER OF GOOD HOURS = 704 NUMBER OF MISSING HOURS = 16 DATA CAPTURE = 97.78 (PERCENT)

NITROGEN DIOXIDE PPM		DATE (DAY,HOUR)				DATE (DAY,HOUR)	
MONTHLY AVERAGE	0.001						
-- 1HR AVERAGE --				-- 8HR RUNNING AVERAGE --			
HIGHEST AVERAGE	0.026	17	14	HIGHEST AVERAGE	0.005	11	23
2ND HIGHEST AVG.	0.006	11	10	2ND HIGHEST AVG.	0.004	11	24
-- 3HR RUNNING AVERAGE --				-- 24HR RUNNING AVERAGE --			
HIGHEST AVERAGE	0.009	17	15	HIGHEST AVERAGE	0.002	12	1
2ND HIGHEST AVG.	0.009	17	14	2ND HIGHEST AVG.	0.002	12	8

Wainwright Near-Term Air Quality Monitoring Program - Wainwright, Alaska
SEPTEMBER 2009

NITRIC OXIDE - PPM

HOURS (LST)

HR-BEG	00	01	02	03	04	05	06	07	08	09	10	11	12	13	14	15	16	17	18	19	20	21	22	23			
HR-END	01	02	03	04	05	06	07	08	09	10	11	12	13	14	15	16	17	18	19	20	21	22	23	24			
DAY																									AVG/	MAX/	MIN
1	0.000	0.000	0.000	0.000	0.000	0.000	0.000	0.000	0.000	0.000	0.001	0.000	0.003	0.005	0.001	0.000	0.000	0.001	0.000	0.001	0.000	0.000	0.000	0.001	0.001	0.005	0.000
2	0.001	0.000	0.000	0.001	0.001	0.001	0.001	0.001	0.001	0.000	0.001	0.001	0.001	0.001	0.000	0.000	0.000	0.000	0.000	0.000	0.000	0.000	0.000	0.000	0.000	0.001	0.000
3	0.000	0.000	0.000	0.000	0.000	0.000	0.000	0.000	0.001	0.000	0.001	0.000	0.001	0.000	0.000	0.000	0.000	0.000	0.000	0.000	0.001	0.001	0.001	0.000	0.000	0.001	0.000
4	0.000	0.000	0.000	0.000	0.002	0.003	0.000	0.001	0.000	0.001	0.000	0.000	0.000	0.000	0.000	0.000	0.001	0.001	0.000	0.000	0.000	0.000	0.000	0.000	0.000	0.003	0.000
5	0.000	0.001	0.000	0.000	0.000	0.000	0.000	0.000	0.000	0.000	0.001	0.000	0.001	0.000	0.000	0.000	0.000	0.001	0.000	0.000	0.000	0.000	0.000	0.000	0.000	0.001	0.000
6	0.000	0.000	0.000	0.000	0.000	0.000	0.000	0.000	0.000	0.000	0.000	0.000	0.000	0.000	0.000	0.000	0.000	0.000	0.000	0.000	0.000	0.000	0.000	0.000	0.000	0.000	0.000
7	0.001	0.000		0.001	0.000	0.001	0.000	0.002	0.000	0.000	0.001	0.004	0.001	0.001	0.000	0.000	0.000	0.001	0.000	0.000	0.000	0.000	0.000	0.000	0.001	0.004	0.000
8	0.000	0.000	0.000	0.000	0.000	0.000	0.000	0.000	0.000	0.001	0.000	0.000	0.001	0.000	0.001	0.000	0.004	0.000	0.000	0.000	0.000	0.000	0.000	0.000	0.000	0.004	0.000
9	0.000	0.000	0.000	0.000	0.000	0.000	0.000	0.000	0.000	0.000	0.000	0.000	0.000	0.000	0.002	0.000	0.000	0.000	0.000	0.000	0.000	0.000	0.000	0.000	0.000	0.002	0.000
10	0.001	0.000	0.000	0.000	0.000		0.000	0.000	0.000	0.000	0.001	0.001	0.001	0.001	0.000	0.002	0.001	0.001	0.000	0.000	0.000	0.000	0.000	0.000	0.000	0.002	0.000
11	0.000	0.000	0.000	0.000	0.000	0.000	0.000	0.001	0.001	0.007	0.001							0.002	0.002	0.007	0.007	0.007	0.007	0.004	0.003	0.007	0.000
12	0.002	0.000	0.000	0.000	0.000	0.000	0.000	0.001	0.001	0.002	0.002	0.001	0.001	0.002	0.002	0.003	0.002	0.000	0.000	0.000	0.000	0.000	0.000	0.000	0.001	0.003	0.000
13	0.000	0.000	0.001	0.000	0.001	0.002	0.000	0.001	0.001	0.000	0.002	0.002	0.004	0.002	0.003	0.003	0.003	0.001	0.000	0.000	0.003	0.000	0.000	0.000	0.001	0.004	0.000
14	0.000	0.000	0.000	0.000	0.001	0.000	0.000	0.001	0.001	0.001	0.001	0.000	0.001	0.001	0.001	0.000	0.000	0.000	0.000	0.000	0.000	0.000	0.000	0.000	0.000	0.001	0.000
15	0.000	0.000	0.000	0.000	0.000	0.000	0.000	0.001	0.004	0.005	0.003	0.002	0.003	0.001	0.004	0.000	0.000	0.001	0.001	0.001	0.000	0.000	0.000	0.000	0.001	0.005	0.000
16	0.000	0.000	0.000	0.000	0.000	0.000	0.000	0.000	0.003	0.001	0.002	0.001	0.001	0.000	0.000	0.000	0.001	0.000	0.000	0.000	0.000	0.000	0.000	0.000	0.000	0.003	0.000
17	0.000	0.000	0.000	0.000	0.000	0.000	0.000	0.001	0.001	0.000	0.000	0.000	0.001	0.033	0.001	0.000	0.001	0.000	0.000	0.000	0.000	0.000	0.000	0.000	0.002	0.033	0.000
18	0.000	0.000		0.000	0.000	0.000	0.000	0.000	0.000	0.001	0.000	0.000	0.002	0.001	0.000	0.000	0.021	0.000	0.000	0.000	0.000	0.000	0.000	0.000	0.001	0.021	0.000
19	0.000	0.000	0.000	0.000	0.000	0.000	0.000	0.000	0.000	0.000	0.000	0.000	0.000	0.000	0.000	0.001	0.001	0.000	0.001	0.000	0.001	0.000	0.001	0.000	0.000	0.001	0.000
20	0.000	0.000	0.000	0.000	0.000	0.000	0.000	0.000	0.000	0.002	0.000	0.000	0.002	0.000	0.000	0.001	0.000	0.000	0.000	0.000	0.001	0.000	0.000	0.000	0.000	0.002	0.000
21	0.000	0.000	0.000	0.000	0.000	0.000	0.000	0.000	0.003	0.003	0.000		0.001	0.000	0.002	0.000	0.000	0.000	0.000	0.000	0.000	0.000	0.000	0.000	0.000	0.003	0.000
22	0.000	0.000	0.000	0.000	0.000	0.000	0.000	0.000	0.000	0.001	0.001	0.000	0.000	0.000	0.000	0.000	0.001	0.000	0.000	0.000	0.000	0.000	0.000	0.000	0.000	0.001	0.000
23	0.000	0.000	0.000	0.000	0.000	0.000	0.000	0.000	0.001	0.000	0.000	0.000	0.000	0.001	0.001	0.001	0.002	0.004	0.004	0.002	0.002	0.001	0.000	0.000	0.001	0.004	0.000
24	0.001	0.001	0.000	0.001	0.003	0.003	0.009		0.000	0.000	0.000	0.000	0.000	0.000	0.000	0.000	0.000	0.000	0.000	0.000	0.000	0.000	0.003	0.001	0.001	0.009	0.000
25	0.000	0.000		0.000	0.000	0.001	0.000	0.001	0.000	0.000	0.000	0.000	0.000	0.000	0.002	0.000	0.000			0.000	0.000	0.001	0.001		0.000	0.002	0.000
26	0.001	0.003	0.002	0.004	0.001	0.000	0.001	0.004	0.001	0.000	0.000	0.000	0.000	0.000	0.003	0.009	0.002	0.000	0.000	0.001	0.000	0.000	0.000	0.001	0.001	0.009	0.000
27	0.000	0.001	0.000	0.000	0.000	0.001	0.001	0.000	0.001	0.000	0.000	0.001	0.000	0.000	0.000	0.001	0.002	0.001	0.000	0.000	0.000	0.000	0.000	0.000	0.000	0.002	0.000
28	0.001	0.001	0.007	0.011	0.002	0.001		0.001	0.001	0.002	0.001	0.000	0.001	0.001	0.001	0.001	0.001	0.000	0.001	0.001	0.001	0.000	0.000	0.000	0.002	0.011	0.000
29	0.000	0.000	0.000	0.000	0.000	0.000	0.000	0.001	0.002	0.001	0.001	0.001	0.001	0.001	0.000	0.001	0.001	0.001	0.001	0.001	0.001	0.000	0.001	0.000	0.001	0.002	0.000
30	0.000	0.001	0.000	0.000	0.000	0.000	0.000	0.001	0.001	0.001	0.001	0.000	0.000	0.002	0.001	0.001	0.003	0.001	0.000	0.001	0.000	0.000	0.000	0.000	0.001	0.003	0.000
AVG	0.000	0.000	0.000	0.001	0.000	0.000	0.000	0.001	0.001	0.001	0.001	0.001	0.001	0.002	0.001	0.001	0.002	0.001	0.000	0.001	0.001	0.000	0.000	0.000	0.001		
MAX	0.002	0.003	0.007	0.011	0.003	0.003	0.009	0.004	0.004	0.007	0.003	0.004	0.004	0.033	0.004	0.009	0.021	0.004	0.004	0.007	0.007	0.007	0.007	0.004		0.033	
MIN	0.000	0.000	0.000	0.000	0.000	0.000	0.000	0.000	0.000	0.000	0.000	0.000	0.000	0.000	0.000	0.000	0.000	0.000	0.000	0.000	0.000	0.000	0.000	0.000			0.000

TOTAL HOURS = 720 NUMBER OF GOOD HOURS = 704 NUMBER OF MISSING HOURS = 16 DATA CAPTURE = 97.78 (PERCENT)

NITRIC OXIDE PPM		DATE (DAY,HOUR)				DATE (DAY,HOUR)	
MONTHLY AVERAGE	0.001						
-- 1HR AVERAGE --				-- 8HR RUNNING AVERAGE --			
HIGHEST AVERAGE	0.033	17	14	HIGHEST AVERAGE	0.005	11	23
2ND HIGHEST AVG.	0.021	18	17	2ND HIGHEST AVG.	0.005	11	24
-- 3HR RUNNING AVERAGE --				-- 24HR RUNNING AVERAGE --			
HIGHEST AVERAGE	0.012	17	15	HIGHEST AVERAGE	0.003	12	1
2ND HIGHEST AVG.	0.011	17	14	2ND HIGHEST AVG.	0.003	12	2

Wainwright Near-Term Air Quality Monitoring Program - Wainwright, Alaska
SEPTEMBER 2009

SULFUR DIOXIDE - PPM

HOURS (LST)

HR-BEG	00	01	02	03	04	05	06	07	08	09	10	11	12	13	14	15	16	17	18	19	20	21	22	23			
HR-END	01	02	03	04	05	06	07	08	09	10	11	12	13	14	15	16	17	18	19	20	21	22	23	24			
DAY																									AVG/	MAX/	MIN
1	0.000	0.000	0.000	0.000	0.000	0.000	0.000	0.000	0.000	0.000	0.000	0.000	0.000	0.000	0.000	0.000	0.000	0.000	0.000	0.000	0.000	0.000	0.000	0.000	0.000	0.000	0.000
2	0.000	0.000	0.000	0.000	0.000	0.000	0.000	0.000	0.000	0.000	0.000	0.000	0.000	0.000	0.000	0.000	0.000	0.000	0.000	0.000	0.000	0.000	0.000	0.000	0.000	0.000	0.000
3	0.000	0.000	0.000	0.000	0.000	0.000	0.000	0.000	0.000	0.000	0.000	0.000	0.000	0.000	0.000	0.000	0.000	0.000	0.000	0.000	0.000	0.000	0.000	0.000	0.000	0.000	0.000
4	0.000	0.000	0.000	0.000	0.000	0.000	0.000	0.000	0.000	0.000	0.000	0.000	0.000	0.000	0.000	0.000	0.000	0.000	0.000	0.000	0.000	0.000	0.000	0.000	0.000	0.000	0.000
5	0.000	0.000	0.000	0.000	0.000	0.000	0.000	0.000	0.000	0.000	0.000	0.000	0.000	0.000	0.000	0.000	0.000	0.000	0.000	0.000	0.000	0.000	0.000	0.000	0.000	0.000	0.000
6	0.000	0.000	0.000	0.000	0.000	0.000	0.000	0.000	0.000	0.000	0.000	0.000	0.000	0.000	0.000	0.000	0.000	0.000	0.000	0.000	0.000	0.000	0.000	0.000	0.000	0.000	0.000
7	0.000	0.000		0.000	0.000	0.000	0.000	0.000	0.000	0.000	0.000	0.000	0.000	0.000	0.000	0.000	0.000	0.000	0.000	0.000	0.000	0.000	0.000	0.000	0.000	0.000	0.000
8	0.000	0.000	0.000	0.000	0.000	0.000	0.000	0.000	0.000	0.000	0.000	0.000	0.000	0.000	0.000	0.000	0.000	0.000	0.000	0.000	0.000	0.000	0.000	0.000	0.000	0.000	0.000
9	0.000	0.000	0.000	0.000	0.000	0.000	0.000	0.000	0.000	0.000	0.000	0.000	0.000	0.000	0.000	0.000	0.000	0.000	0.000	0.000	0.000	0.000	0.000	0.000	0.000	0.000	0.000
10	0.000	0.000	0.000	0.000	0.000		0.000	0.000	0.000	0.000	0.000	0.000	0.000	0.000	0.000	0.000	0.000	0.000	0.000	0.000	0.000	0.000	0.000	0.000	0.000	0.000	0.000
11	0.000	0.000	0.000	0.001	0.000	0.000	0.000	0.000	0.000	0.000	0.000							0.000	0.001	0.001	0.001	0.000	0.000	0.000	0.000	0.001	0.000
12	0.000	0.000	0.000	0.000	0.000	0.000	0.000	0.000	0.000	0.000	0.000	0.000	0.000	0.000	0.000	0.000	0.000	0.000	0.000	0.000	0.000	0.000	0.000	0.000	0.000	0.000	0.000
13	0.000	0.000	0.000	0.000	0.000	0.000	0.000	0.000	0.000	0.000	0.000	0.000	0.000	0.000	0.000	0.000	0.000	0.000	0.000	0.000	0.000	0.000	0.000	0.000	0.000	0.000	0.000
14	0.000	0.000	0.000	0.000	0.000	0.000	0.000	0.000	0.000	0.000	0.000	0.000	0.000	0.000	0.000	0.000	0.000	0.000	0.000	0.000	0.000	0.000	0.000	0.000	0.000	0.000	0.000
15	0.000	0.000	0.000	0.000	0.000	0.000	0.000	0.000	0.000	0.001	0.000	0.000	0.000	0.000	0.000	0.000	0.000	0.000	0.000	0.000	0.000	0.000	0.000	0.000	0.000	0.001	0.000
16	0.000	0.000	0.000	0.000	0.000	0.000	0.000	0.000	0.000	0.000	0.000	0.000	0.000	0.000	0.000	0.000	0.000	0.000	0.000	0.000	0.000	0.000	0.000	0.000	0.000	0.000	0.000
17	0.000	0.000	0.000	0.000	0.000	0.000	0.000	0.000	0.000	0.000	0.000	0.000	0.000	0.001	0.000	0.000	0.000	0.000	0.000	0.000	0.000	0.000	0.000	0.000	0.000	0.001	0.000
18	0.000	0.000		0.000	0.000	0.000	0.000	0.000	0.000	0.000	0.000	0.000	0.000	0.000	0.000	0.000	0.000	0.000	0.000	0.000	0.000	0.000	0.000	0.000	0.000	0.000	0.000
19	0.000	0.000	0.000	0.000	0.000	0.000	0.000	0.000	0.000	0.000	0.000	0.000	0.000	0.000	0.000	0.000	0.000	0.000	0.000	0.000	0.000	0.000	0.000	0.000	0.000	0.000	0.000
20	0.000	0.000	0.000	0.000	0.000	0.000	0.000	0.000	0.000	0.000	0.000	0.000	0.000	0.000	0.000	0.000	0.000	0.000	0.000	0.000	0.000	0.000	0.000	0.000	0.000	0.000	0.000
21	0.000	0.000	0.000	0.000	0.000	0.000	0.000	0.000	0.000	0.000	0.000		0.000	0.000	0.000	0.000	0.000	0.000	0.000	0.000	0.000	0.000	0.000	0.000	0.000	0.000	0.000
22	0.000	0.000	0.000	0.000	0.000	0.000	0.000	0.000	0.000	0.000	0.000	0.000	0.000	0.000	0.000	0.000	0.000	0.000	0.000	0.000	0.000	0.000	0.000	0.000	0.000	0.000	0.000
23	0.000	0.000	0.000	0.000	0.000	0.000	0.000	0.000	0.000	0.000	0.000	0.000	0.000	0.000	0.000	0.000	0.000	0.000	0.000	0.000	0.000	0.000	0.000	0.000	0.000	0.000	0.000
24	0.000	0.001	0.002	0.001	0.002	0.002	0.005		0.001	0.001	0.001	0.000	0.000	0.000	0.000	0.000	0.000	0.000	0.000	0.000	0.000	0.000	0.002	0.001	0.001	0.005	0.000
25	0.000	0.000		0.000	0.000	0.001	0.000	0.000	0.001	0.001	0.001	0.000	0.000	0.000	0.000	0.000	0.000				0.000	0.000	0.000	0.000	0.000	0.001	0.000
26	0.000	0.000	0.000	0.001	0.000	0.000	0.000	0.000	0.000	0.000	0.000	0.000	0.000	0.000	0.000	0.001	0.000	0.000	0.000	0.000	0.000	0.000	0.000	0.000	0.000	0.001	0.000
27	0.000	0.001	0.000	0.001	0.000	0.001	0.001	0.000	0.000	0.000	0.000	0.000	0.001	0.001	0.000	0.000	0.000	0.000	0.000	0.000	0.000	0.001	0.000	0.000	0.000	0.001	0.000
28	0.001	0.001	0.003	0.006	0.002	0.001		0.000	0.001	0.001	0.001	0.000	0.000	0.000	0.000	0.000	0.000	0.000	0.001	0.001	0.000	0.000	0.000	0.000	0.001	0.006	0.000
29	0.000	0.000	0.000	0.000	0.000	0.000	0.000	0.000	0.000	0.001	0.001	0.000	0.000	0.000	0.000	0.000	0.000	0.000	0.000	0.000	0.000	0.000	0.000	0.000	0.000	0.001	0.000
30	0.000	0.001	0.000	0.000	0.000	0.000	0.000	0.000	0.000	0.000	0.000	0.000	0.000	0.000	0.000	0.000	0.000	0.000	0.000	0.000	0.000	0.000	0.000	0.000	0.000	0.001	0.000
AVG	0.000	0.000	0.000	0.000	0.000	0.000	0.000	0.000	0.000	0.000	0.000	0.000	0.000	0.000	0.000	0.000	0.000	0.000	0.000	0.000	0.000	0.000	0.000	0.000	0.000		
MAX	0.001	0.001	0.003	0.006	0.002	0.002	0.005	0.000	0.001	0.001	0.001	0.001	0.001	0.001	0.000	0.001	0.000	0.000	0.001	0.001	0.001	0.001	0.002	0.001		0.006	
MIN	0.000	0.000	0.000	0.000	0.000	0.000	0.000	0.000	0.000	0.000	0.000	0.000	0.000	0.000	0.000	0.000	0.000	0.000	0.000	0.000	0.000	0.000	0.000	0.000			0.000

TOTAL HOURS = 720 NUMBER OF GOOD HOURS = 704 NUMBER OF MISSING HOURS = 16 DATA CAPTURE = 97.78 (PERCENT)

SULFUR DIOXIDE PPM		DATE (DAY,HOUR)				DATE (DAY,HOUR)	
MONTHLY AVERAGE	0.000						
-- 1HR AVERAGE --				-- 8HR RUNNING AVERAGE --			
HIGHEST AVERAGE	0.006	28	4	HIGHEST AVERAGE	0.002	28	10
2ND HIGHEST AVG.	0.005	24	7	2ND HIGHEST AVG.	0.002	28	9
-- 3HR RUNNING AVERAGE --				-- 24HR RUNNING AVERAGE --			
HIGHEST AVERAGE	0.004	28	5	HIGHEST AVERAGE	0.001	28	11
2ND HIGHEST AVG.	0.003	28	4	2ND HIGHEST AVG.	0.001	28	20

Wainwright Near-Term Air Quality Monitoring Program - Wainwright, Alaska
SEPTEMBER 2009

OZONE - PPM

HOURS (LST)

HR-BEG	00	01	02	03	04	05	06	07	08	09	10	11	12	13	14	15	16	17	18	19	20	21	22	23			
HR-END	01	02	03	04	05	06	07	08	09	10	11	12	13	14	15	16	17	18	19	20	21	22	23	24			
DAY																									AVG/	MAX/	MIN
1	0.017	0.016	0.015	0.015	0.019	0.022	0.021	0.022	0.020	0.021	0.022	0.022	0.021	0.020	0.022	0.023	0.023	0.024	0.023	0.023	0.023	0.021	0.020	0.019	0.021	0.024	0.015
2	0.018	0.023	0.023	0.022	0.023	0.023	0.023	0.023	0.024	0.024	0.024	0.024	0.024	0.023	0.025	0.025	0.025	0.025	0.025	0.025	0.026	0.025	0.026	0.026	0.024	0.026	0.018
3	0.026	0.024	0.025	0.027	0.023	0.021	0.021	0.021	0.021	0.021	0.021	0.021	0.022	0.023	0.023	0.021	0.021	0.021	0.021	0.021	0.021	0.021	0.022	0.023	0.022	0.027	0.021
4	0.024	0.024	0.024	0.026	0.024	0.022	0.024	0.021	0.022	0.019	0.016	0.016	0.016	0.021	0.025	0.024	0.024	0.024	0.023	0.022	0.022	0.022	0.022	0.021	0.022	0.026	0.016
5	0.020	0.021	0.022	0.024	0.024	0.022	0.022	0.023	0.021	0.023	0.023	0.025	0.025	0.026	0.025	0.026	0.025	0.025	0.025	0.027	0.027	0.028	0.027	0.027	0.024	0.028	0.020
6	0.027	0.027	0.026	0.026	0.028	0.027	0.027	0.027	0.027	0.026	0.026	0.025	0.025	0.024	0.024	0.024	0.025	0.027	0.027	0.027	0.027	0.027	0.029	0.027	0.026	0.029	0.024
7	0.024	0.026		0.022	0.020	0.023	0.023	0.021	0.023	0.023	0.022	0.019	0.021	0.022	0.023	0.022	0.022	0.022	0.021	0.021	0.019	0.018	0.017	0.016	0.021	0.026	0.016
8	0.016	0.018	0.019	0.019	0.020	0.021	0.024	0.023	0.020	0.020	0.022	0.022	0.023	0.024	0.024	0.024	0.023	0.023	0.023	0.023	0.023	0.024	0.024	0.024	0.022	0.024	0.016
9	0.024	0.024	0.023	0.023	0.022	0.023	0.022	0.022	0.022	0.022	0.022	0.022	0.022	0.023	0.023	0.023	0.023	0.023	0.022	0.021	0.020	0.019	0.020	0.020	0.022	0.024	0.019
10	0.019	0.019	0.016	0.016	0.016		0.015	0.016	0.016	0.017	0.018	0.018	0.018	0.019	0.020	0.019	0.021	0.021	0.022	0.022	0.022	0.022	0.022	0.020	0.019	0.022	0.015
11	0.020	0.020	0.020	0.021	0.022	0.022	0.022	0.022	0.021	0.021	0.022							0.023	0.023	0.020	0.019	0.019	0.019	0.022	0.021	0.023	0.019
12	0.024	0.027	0.030	0.026	0.027	0.027	0.027	0.024	0.024	0.022	0.018	0.018	0.020	0.021	0.023	0.024	0.024	0.024	0.023	0.022	0.020	0.022	0.023	0.023	0.023	0.030	0.018
13	0.022	0.023	0.024	0.024	0.024	0.023	0.024	0.023	0.023	0.024	0.022	0.023	0.021	0.023	0.022	0.022	0.022	0.025	0.025	0.025	0.023	0.024	0.024	0.021	0.023	0.025	0.021
14	0.018	0.018	0.022	0.017	0.018	0.017	0.016	0.014	0.015	0.015	0.016	0.018	0.018	0.017	0.015	0.016	0.017	0.016	0.015	0.015	0.014	0.014	0.013	0.013	0.016	0.022	0.013
15	0.012	0.012	0.014	0.009	0.010	0.008	0.008	0.007	0.007	0.007	0.010	0.013	0.018	0.023	0.022	0.024	0.024	0.022	0.021	0.021	0.021	0.021	0.022	0.022	0.016	0.024	0.007
16	0.021	0.020	0.023	0.018	0.018	0.020	0.022	0.023	0.024	0.025	0.025	0.026	0.026	0.026	0.027	0.027	0.028	0.027	0.027	0.027	0.029	0.028	0.026	0.025	0.025	0.029	0.018
17	0.021	0.018	0.023	0.022	0.024	0.023	0.022	0.023	0.022	0.021	0.022	0.022	0.021	0.020	0.022	0.022	0.022	0.022	0.023	0.023	0.023	0.022	0.022	0.022	0.022	0.024	0.018
18	0.022	0.023		0.024	0.023	0.025	0.025	0.025	0.024	0.024	0.024	0.024	0.026	0.027	0.027	0.026	0.025	0.026	0.026	0.027	0.027	0.025	0.023	0.023	0.025	0.027	0.022
19	0.024	0.025	0.027	0.024	0.025	0.026	0.026	0.026	0.028	0.027	0.029	0.031	0.031	0.032	0.032	0.031	0.029	0.029	0.029	0.029	0.026	0.027	0.025	0.024	0.028	0.032	0.024
20	0.027	0.029	0.032	0.028	0.028	0.028	0.027	0.029	0.028	0.027	0.028	0.028	0.027	0.027	0.027	0.027	0.027	0.027	0.029	0.028	0.029	0.031	0.032	0.033	0.028	0.033	0.027
21	0.033	0.032	0.035	0.031	0.031	0.032	0.032	0.032	0.031	0.031	0.031		0.033	0.032	0.033	0.033	0.033	0.033	0.032	0.032	0.032	0.032	0.033	0.033	0.032	0.035	0.031
22	0.032	0.032	0.034	0.031	0.032	0.031	0.031	0.031	0.030	0.029	0.030	0.031	0.030	0.030	0.031	0.031	0.030	0.031	0.031	0.030	0.030	0.029	0.030	0.030	0.031	0.034	0.029
23	0.029	0.030	0.033	0.030	0.030	0.030	0.030	0.029	0.029	0.029	0.029	0.029	0.029	0.029	0.029	0.029	0.029	0.027	0.028	0.031	0.032	0.032	0.032	0.031	0.030	0.033	0.027
24	0.030	0.031	0.032	0.028	0.028	0.027	0.027		0.030	0.031	0.032	0.032	0.032	0.032	0.032	0.032	0.032	0.032	0.032	0.032	0.031	0.031	0.029	0.027	0.031	0.032	0.027
25	0.028	0.029		0.029	0.029	0.024	0.027	0.029	0.028	0.028	0.029	0.029	0.030	0.030	0.026	0.023	0.024				0.026	0.027	0.026	0.024	0.027	0.030	0.023
26	0.023	0.022	0.026	0.022	0.027	0.024	0.024	0.021	0.023	0.026	0.027	0.029	0.028	0.029	0.025	0.020	0.026	0.026	0.023	0.023	0.027	0.031	0.031	0.031	0.026	0.031	0.020
27	0.030	0.030	0.033	0.029	0.031	0.028	0.025	0.023	0.027	0.031	0.032	0.032	0.031	0.032	0.032	0.032	0.030	0.030	0.032	0.031	0.031	0.031	0.031	0.031	0.030	0.033	0.023
28	0.030	0.030	0.029	0.022	0.027	0.028		0.036	0.029	0.026	0.027	0.029	0.030	0.030	0.029	0.030	0.030	0.030	0.030	0.029	0.029	0.030	0.030	0.030	0.029	0.036	0.022
29	0.026	0.022	0.024	0.020	0.021	0.023	0.022	0.023	0.024	0.025	0.024	0.025	0.024	0.025	0.025	0.025	0.026	0.027	0.026	0.027	0.027	0.026	0.026	0.028	0.025	0.028	0.020
30	0.028	0.028	0.029	0.027	0.028	0.030	0.029	0.026	0.026	0.027	0.029	0.028	0.027	0.026	0.027	0.028	0.029	0.029	0.029	0.029	0.028	0.028	0.027	0.028	0.028	0.030	0.026
AVG	0.024	0.024	0.025	0.023	0.024	0.024	0.024	0.024	0.024	0.024	0.024	0.024	0.025	0.025	0.026	0.025	0.025	0.026	0.025	0.025	0.025	0.025	0.025	0.025	0.025		
MAX	0.033	0.032	0.035	0.031	0.032	0.032	0.032	0.036	0.031	0.031	0.032	0.032	0.033	0.032	0.033	0.033	0.033	0.033	0.032	0.032	0.032	0.032	0.033	0.033		0.036	
MIN	0.012	0.012	0.014	0.009	0.010	0.008	0.008	0.007	0.007	0.007	0.010	0.013	0.016	0.017	0.015	0.016	0.017	0.016	0.015	0.015	0.014	0.014	0.013	0.013			0.007

TOTAL HOURS = 720 NUMBER OF GOOD HOURS = 704 NUMBER OF MISSING HOURS = 16 DATA CAPTURE = 97.78 (PERCENT)

OZONE PPM		DATE (DAY,HOUR)				DATE (DAY,HOUR)	
MONTHLY AVERAGE	0.025						
-- 1HR AVERAGE --				-- 8HR RUNNING AVERAGE --			
HIGHEST AVERAGE	0.036	28	8	HIGHEST AVERAGE	0.033	21	19
2ND HIGHEST AVG.	0.035	21	3	2ND HIGHEST AVG.	0.033	21	20
-- 3HR RUNNING AVERAGE --				-- 24HR RUNNING AVERAGE --			
HIGHEST AVERAGE	0.033	21	3	HIGHEST AVERAGE	0.032	21	23
2ND HIGHEST AVG.	0.033	21	17	2ND HIGHEST AVG.	0.032	21	24

Wainwright Near-Term Air Quality Monitoring Program - Wainwright, Alaska
SEPTEMBER 2009

CARBON MONOXIDE - PPM

HOURS (LST)

HR-BEG	00	01	02	03	04	05	06	07	08	09	10	11	12	13	14	15	16	17	18	19	20	21	22	23			
HR-END	01	02	03	04	05	06	07	08	09	10	11	12	13	14	15	16	17	18	19	20	21	22	23	24			
DAY																									AVG/	MAX/	MIN
1	0.117	0.134	0.121	0.131	0.117	0.117	0.138	0.119	0.115	0.102	0.099	0.100	0.113	0.095	0.096	0.088	0.076	0.081	0.088	0.084	0.102	0.118	0.112	0.105	0.107	0.138	0.076
2	0.105	0.104	0.105	0.116	0.112	0.110	0.111	0.113	0.113	0.119	0.106	0.106	0.107	0.102	0.103	0.112	0.108	0.151	0.172	0.168	0.171	0.176	0.174	0.183	0.127	0.183	0.102
3	0.161	0.170	0.157	0.142	0.113	0.109	0.103	0.124	0.119	0.118	0.117	0.121	0.118	0.124	0.135	0.161	0.163	0.163	0.162	0.165	0.180	0.159	0.134	0.123	0.139	0.180	0.103
4	0.125	0.138	0.123	0.113	0.135	0.201	0.198	0.180	0.159	0.160	0.163	0.159	0.162	0.157	0.158									0.105	0.152	0.201	0.105
5	0.102	0.117	0.100	0.090	0.085	0.091	0.093	0.091	0.083	0.068	0.059	0.060	0.068	0.050	0.048	0.042	0.042	0.045	0.051	0.053	0.040	0.041	0.049	0.063	0.068	0.117	0.040
6	0.085	0.100	0.080	0.093	0.086	0.087	0.096	0.090	0.097	0.101	0.091	0.097	0.094	0.086	0.070	0.072	0.042	0.043	0.053	0.073	0.073	0.092	0.079	0.074	0.081	0.101	0.042
7	0.055	0.055		0.059	0.034	0.059	0.035	0.095	0.040	0.040	0.042	0.057	0.057	0.051	0.048	0.064	0.046	0.054	0.038	0.034	0.039	0.032	0.033	0.083	0.050	0.095	0.032
8	0.037	0.054	0.040	0.041	0.045	0.047	0.056	0.065	0.071	0.062	0.055	0.062	0.067	0.066	0.077	0.070	0.065	0.063	0.055	0.058	0.047	0.053	0.057	0.057	0.057	0.077	0.037
9	0.056	0.070	0.056	0.056	0.059	0.056	0.076	0.073	0.067	0.061	0.062	0.069	0.072	0.067	0.066	0.057	0.057	0.044	0.040	0.041	0.036	0.037	0.058	0.043	0.057	0.076	0.036
10	0.037	0.041	0.020	0.017	0.019		0.017	0.008	0.025	0.010	0.014	0.026	0.017	0.023	0.009	0.004	0.000	0.000	0.000	0.010	0.022	0.017	0.005	0.016	0.016	0.041	0.000
11	0.020	0.037	0.026	0.039	0.032	0.037	0.038	0.072	0.078	0.094	0.086							0.286	0.176	0.131	0.075	0.086	0.090	0.086	0.083	0.286	0.020
12	0.065	0.067	0.092	0.047	0.053	0.063	0.049	0.066	0.080	0.065	0.046	0.029	0.025	0.035	0.044	0.043	0.063	0.113	0.119	0.101	0.085	0.090	0.100	0.070	0.067	0.119	0.025
13	0.095	0.100	0.073	0.079	0.084	0.086	0.093	0.097	0.091	0.111	0.115	0.101	0.091	0.089	0.084	0.079	0.077	0.066	0.074	0.068	0.055	0.056	0.061	0.108	0.085	0.115	0.055
14	0.083	0.109	0.108	0.112	0.111	0.103	0.136	0.125	0.123	0.146	0.125	0.122	0.125	0.113	0.104	0.111	0.103	0.096	0.078	0.086	0.079	0.086	0.084	0.083	0.106	0.146	0.078
15	0.074	0.104	0.097	0.089	0.084	0.083	0.086	0.080	0.095	0.102	0.099	0.097	0.095	0.104	0.101	0.093	0.097	0.091	0.085	0.108	0.113	0.108	0.170	0.072	0.097	0.170	0.072
16	0.068	0.047	0.036	0.035	0.033	0.034	0.034	0.038	0.084	0.032	0.047	0.089	0.059	0.054	0.052	0.058	0.052	0.045	0.050	0.059	0.074	0.065	0.026	0.014	0.049	0.089	0.014
17	0.037	0.060	0.058	0.057	0.065	0.066	0.069	0.069	0.075	0.069	0.067	0.042	0.042	0.061	0.029	0.034	0.027	0.032	0.030	0.030	0.034	0.031	0.045	0.027	0.048	0.075	0.027
18	0.019	0.000		0.000	0.000	0.000	0.000	0.000	0.000	0.000	0.000	0.000	0.000	0.000	0.000	0.000	0.000	0.000	0.000	0.000	0.000	0.000	0.000	0.000	0.001	0.019	0.000
19	0.000	0.000	0.000	0.000	0.000	0.000	0.000	0.000	0.000	0.000	0.000	0.000	0.000	0.000	0.007	0.073	0.012	0.001	0.000	0.000	0.049	0.040	0.032	0.012	0.009	0.073	0.000
20	0.011	0.032	0.014	0.001	0.009	0.000	0.002	0.023	0.031	0.032	0.029	0.043	0.038	0.035	0.033	0.056	0.035	0.010	0.005	0.033	0.019	0.018	0.027	0.075	0.025	0.075	0.000
21			0.116	0.123	0.125	0.134	0.124	0.125	0.138	0.160	0.181		0.188		0.172	0.147	0.093	0.091	0.012	0.041	0.103	0.101	0.108	0.123	0.120	0.188	0.012
22	0.137	0.185	0.193	0.207	0.183	0.189	0.193	0.189	0.201	0.210	0.196	0.197	0.207	0.216	0.198	0.181	0.216	0.193	0.169	0.180	0.172	0.180			0.191	0.216	0.137
23		0.131	0.110	0.112	0.113	0.120	0.122	0.112	0.165	0.127	0.101	0.098	0.088	0.102	0.125	0.109	0.101	0.097	0.101	0.102	0.105	0.101	0.093	0.087	0.110	0.165	0.087
24	0.116	0.100	0.076	0.054	0.043	0.016	0.021		0.032	0.048	0.029	0.022	0.012	0.010	0.040	0.039	0.067	0.063	0.067	0.067	0.095	0.099	0.628	0.170	0.083	0.628	0.010
25	0.066	0.086		0.094	0.113	0.129	0.130	0.134	0.153	0.142	0.168	0.173	0.141	0.139	0.155	0.134	0.127				0.233	0.234	0.276	0.248	0.154	0.276	0.066
26	0.205	0.207	0.176	0.141	0.123	0.116	0.105	0.132	0.170	0.155	0.132	0.113	0.105	0.100	0.091	0.085	0.073	0.072	0.077	0.172	0.108	0.075	0.072	0.084	0.120	0.207	0.072
27	0.062	0.064	0.000	0.039	0.042	0.063	0.063	0.086	0.119	0.146	0.113	0.117	0.129	0.129	0.093	0.062	0.053	0.054	0.081	0.084	0.121	0.105	0.086	0.084	0.083	0.146	0.000
28	0.071	0.092	0.069	0.085	0.097	0.093		0.093	0.104	0.128	0.132	0.113	0.087	0.082	0.092	0.094	0.097	0.083	0.082	0.063	0.014	0.016	0.027	0.045	0.081	0.132	0.014
29	0.055	0.051	0.012	0.011	0.016	0.024	0.029	0.036	0.051	0.048	0.042	0.047	0.043	0.051	0.051	0.048	0.046	0.038	0.040	0.034	0.028	0.020	0.030	0.023	0.036	0.055	0.011
30	0.024	0.049	0.031	0.013	0.003	0.000	0.034	0.027	0.052	0.044	0.049	0.049	0.055	0.072	0.063	0.068	0.084	0.070	0.079	0.075	0.064	0.045	0.040	0.038	0.047	0.084	0.000
AVG	0.075	0.086	0.077	0.073	0.071	0.077	0.078	0.085	0.091	0.090	0.086	0.082	0.083	0.079	0.081	0.078	0.072	0.077	0.071	0.076	0.081	0.079	0.096	0.079	0.080		
MAX	0.205	0.207	0.193	0.207	0.183	0.201	0.198	0.189	0.201	0.210	0.196	0.197	0.207	0.216	0.198	0.181	0.216	0.286	0.176	0.180	0.233	0.234	0.628	0.248		0.628	
MIN	0.000	0.000	0.000	0.000	0.000	0.000	0.000	0.000	0.000	0.000	0.000	0.000	0.000	0.000	0.000	0.000	0.000	0.000	0.000	0.000	0.000	0.000	0.000	0.000			0.000

TOTAL HOURS = 720 NUMBER OF GOOD HOURS = 690 NUMBER OF MISSING HOURS = 30 DATA CAPTURE = 95.83 (PERCENT)

CARBON MONOXIDE PPM		DATE (DAY,HOUR)				DATE (DAY,HOUR)	
MONTHLY AVERAGE	0.080						
-- 1HR AVERAGE --				-- 8HR RUNNING AVERAGE --			
HIGHEST AVERAGE	0.628	24	23	HIGHEST AVERAGE	0.234	26	2
2ND HIGHEST AVG.	0.286	11	18	2ND HIGHEST AVG.	0.226	26	3
-- 3HR RUNNING AVERAGE --				-- 24HR RUNNING AVERAGE --			
HIGHEST AVERAGE	0.299	24	24	HIGHEST AVERAGE	0.193	23	1
2ND HIGHEST AVG.	0.288	25	1	2ND HIGHEST AVG.	0.191	22	24

Wainwright Near-Term Air Quality Monitoring Program - Wainwright, Alaska
SEPTEMBER 2009

PM-10 - µg/m3

HOURS (LST)

HR-BEG	00	01	02	03	04	05	06	07	08	09	10	11	12	13	14	15	16	17	18	19	20	21	22	23			
HR-END	01	02	03	04	05	06	07	08	09	10	11	12	13	14	15	16	17	18	19	20	21	22	23	24			
DAY																									AVG/	MAX/	MIN
1	6.	4.	6.	9.	10.	10.	11.	10.	6.	9.	13.	13.	14.	18.	33.	41.	46.	39.	42.	46.	30.	19.	25.	18.	20.	46.	4.
2	29.	36.	30.	24.	25.	28.	22.	26.	23.	17.	22.	25.	17.	12.	11.	15.	16.	14.	21.	21.	17.	20.	15.	16.	21.	36.	11.
3	18.	13.	14.	15.	11.	7.	5.	7.	11.	13.	18.	16.	32.	41.	43.	37.	31.	18.	21.	20.	18.	18.	19.	11.	19.	43.	5.
4	24.	16.	21.	14.	16.	18.	17.	10.	9.	6.	3.	9.	13.	48.	21.	35.	37.	32.	36.	50.	52.	28.	30.	33.	24.	52.	3.
5	31.	18.	23.	21.	24.	36.	35.	40.	47.	41.	56.	53.	84.	67.	76.	60.	61.	74.	100.	89.	79.	56.	21.	17.	50.	100.	17.
6	22.	16.	13.	12.	18.	21.	20.	22.	22.	27.	34.	19.	16.	17.	16.	19.	14.	19.	15.	14.	11.	19.	15.	8.	18.	34.	8.
7	9.	7.	5.	7.	6.	6.	6.	4.	6.	11.	9.	9.	33.	13.	12.	7.	6.	6.	5.	6.	4.	6.	6.	5.	8.	33.	4.
8	7.	4.	2.	2.	2.	2.	2.	2.	3.	4.	6.	7.	7.	7.	10.	13.	12.	10.	8.	7.	6.	6.	7.	9.	6.	13.	2.
9	10.	9.	8.	9.	6.	5.	3.	3.	5.	3.	4.	3.	1.	2.	3.	3.	6.	7.	4.	1.	2.	1.	3.	5.	4.	10.	1.
10	2.	1.	2.	1.	1.	2.	3.	4.	5.	5.	4.	4.	15.	11.	11.	11.	7.	5.	5.	5.	5.	2.	1.	3.	5.	15.	1.
11	6.	6.	4.	6.	8.	6.	4.	6.	7.	5.	4.	5.	5.	5.	4.	6.	9.	9.	9.	12.	11.	9.	8.	6.	7.	12.	4.
12	4.	7.	10.	9.	8.	6.	2.	1.	6.	5.	3.	6.	5.	2.	2.				1.	-1.	0.	3.	6.	5.	4.	10.	-1.
13	1.	1.	3.	4.	4.	5.	6.	3.	1.	8.	9.	2.	-3.	0.	3.	3.	4.	3.	3.	3.	0.	1.	4.	6.	3.	9.	-3.
14	3.	1.	4.	4.	2.	3.	3.	6.	4.	0.	1.	2.	1.	2.	3.	3.	3.	4.	5.	6.	1.	17.	2.	2.	3.	17.	0.
15	0.	2.	4.	4.	5.	3.	3.	1.	0.	1.	2.	3.	2.	2.	5.	7.	4.	2.	5.	7.	6.	2.	2.	2.	3.	7.	0.
16	3.	4.	3.	3.	0.	1.	3.	2.	1.	0.	0.	2.	6.	7.	5.	4.	7.	7.	4.	4.	3.	3.	4.	4.	3.	7.	0.
17	4.	1.	4.	6.	3.	5.	5.	4.	3.	4.	9.	11.	10.	12.	12.	12.	13.	14.	12.	9.	9.	8.	7.	7.	8.	14.	1.
18	6.	6.	8.	11.	10.	8.	9.	10.	8.	6.	7.	9.	12.	16.	22.	20.	13.	11.	9.	10.	13.	10.	7.	9.	10.	22.	6.
19	11.	10.	8.	10.	11.	11.	10.	10.	10.	7.	9.	13.	17.	23.	20.	37.	6.	9.	12.	13.	12.	11.	16.	11.	13.	37.	6.
20	8.	5.	6.	6.	8.	8.	6.	6.	5.	2.	4.	18.	2.	7.	8.	8.	4.	20.	17.	46.	7.	8.	7.	7.	9.	46.	2.
21	7.	5.	6.	7.	4.	3.	6.	28.	10.	8.	9.	8.	54.	86.	59.	54.	47.	41.	14.	42.	34.	35.	18.	21.	25.	86.	3.
22	10.	11.	10.	47.	5.	7.	12.	25.	59.	37.	25.	26.	32.	41.	55.	54.	68.	33.	13.	18.	23.	12.	16.	17.	27.	68.	5.
23	11.	8.	5.	7.	9.	9.	7.	15.	12.	10.	7.	6.	6.	9.	9.	6.	8.	10.	7.	5.	6.	7.	7.	6.	8.	15.	5.
24	6.	8.	7.	3.	2.	8.	12.	33.	26.	30.	20.	19.	13.	14.	13.	13.	12.	19.	15.	18.	17.	14.	16.	15.	15.	33.	2.
25	9.	6.	3.	1.	2.	5.	1.	0.	2.	5.	9.	7.	6.	7.	6.	6.	6.	6.			12.	11.	7.	7.	6.	12.	0.
26	10.	10.	7.	6.	9.	10.	6.	17.	17.	15.	15.	8.	7.	4.	5.	8.	10.	10.	12.	17.	8.	7.	6.	7.	10.	17.	4.
27	10.	13.	14.	12.	4.	3.	5.	0.	3.	9.	7.	4.	4.	6.	5.	6.	9.	6.	5.	7.	10.	10.	8.	10.	7.	14.	0.
28	10.	9.	12.	10.	4.	1.	3.	3.	4.	8.	10.	9.	6.	8.	6.	4.	2.	0.	4.	6.	5.	6.	4.	5.	6.	12.	0.
29	9.	8.	6.	4.	0.	1.	2.	4.	6.	5.	8.	10.	6.	26.	17.	20.	31.	22.	38.	15.	10.	6.	26.	5.	12.	38.	0.
30	6.	5.	6.	5.	1.	1.	6.	63.	51.	17.	61.	33.	85.	34.	20.	42.	281.	200.	66.	129.	60.	23.	24.	8.	51.	281.	1.
AVG	10.	8.	8.	9.	7.	8.	8.	12.	12.	11.	13.	12.	17.	18.	17.	19.	27.	22.	18.	22.	16.	13.	11.	10.	14.		
MAX	31.	36.	30.	47.	25.	36.	35.	63.	59.	41.	61.	53.	85.	86.	76.	60.	281.	200.	100.	129.	79.	56.	30.	33.		281.	
MIN	0.	1.	2.	1.	0.	1.	1.	0.	0.	0.	0.	2.	-3.	0.	2.	3.	2.	0.	1.	-1.	0.	1.	1.	2.			-3.

TOTAL HOURS = 720 NUMBER OF GOOD HOURS = 715 NUMBER OF MISSING HOURS = 5 DATA CAPTURE = 99.31 (PERCENT)

PM-10 µg/m3		DATE (DAY,HOUR)				DATE (DAY,HOUR)
MONTHLY AVERAGE	14.					
-- 1HR AVERAGE --			-- 8HR RUNNING AVERAGE --			
HIGHEST AVERAGE	281.	30 17	HIGHEST AVERAGE	107.	30 20	
2ND HIGHEST AVG.	200.	30 18	2ND HIGHEST AVG.	104.	30 21	
-- 3HR RUNNING AVERAGE --			-- 24HR RUNNING AVERAGE --			
HIGHEST AVERAGE	182.	30 19	HIGHEST AVERAGE	51.	5 22	
2ND HIGHEST AVG.	174.	30 18	2ND HIGHEST AVG.	51.	30 24	

Wainwright Near-Term Air Quality Monitoring Program - Wainwright, Alaska
SEPTEMBER 2009

PM-2.5 - µg/m3

HOURS (LST)

HR-BEG	00	01	02	03	04	05	06	07	08	09	10	11	12	13	14	15	16	17	18	19	20	21	22	23			
HR-END	01	02	03	04	05	06	07	08	09	10	11	12	13	14	15	16	17	18	19	20	21	22	23	24			
DAY																									AVG/	MAX/	MIN
1	1.	3.	6.	5.	6.	1.	-3.	1.	4.	4.	2.	4.	6.	5.	6.	7.	5.	5.	3.	4.	4.	3.	2.	2.	4.	7.	-3.
2	5.	8.	8.	3.	3.	4.	4.	4.	3.	3.	1.	3.	5.	4.	3.	-2.	0.	4.	5.	5.	3.	2.	4.	1.	3.	8.	-2.
3	-1.	0.	-1.	-1.	0.	2.	1.	3.	2.	2.	27.	16.	54.	80.	60.	35.	14.	5.	6.	6.	6.	5.	4.	4.	14.	80.	-1.
4	2.	5.	9.	3.	1.	4.	5.	4.	3.	2.	-1.	-2.	1.	4.	5.	7.	7.	4.	5.	12.	11.	10.	8.	30.	6.	30.	-2.
5	22.	25.	17.	14.	18.	23.	22.	14.	12.	10.	10.	9.	7.	13.	7.	10.	12.	12.	14.	11.	10.	5.	2.	3.	13.	25.	2.
6	3.	4.	2.	4.	5.	2.	5.	3.	-1.	2.	7.	5.	3.	4.	3.	3.	2.	2.	1.	2.	3.	3.	5.	5.	3.	7.	-1.
7	4.	2.	0.	0.	-1.	-1.	-2.	1.	3.	1.	1.	2.	0.	0.	1.	3.	5.	1.	2.	6.	4.	2.	1.	-1.	1.	6.	-2.
8	2.	4.	0.	0.	1.	3.	2.	2.	3.	1.	-1.	-1.	0.	2.	13.	15.	-2.	16.	13.	1.	1.	6.	50.	13.	6.	50.	-2.
9	23.	13.	6.	3.	2.	5.	4.	4.	8.	18.	41.	29.	32.	49.	39.	25.	17.	10.	13.	1.	0.	2.	8.	4.	15.	49.	0.
10	-1.	1.	0.	1.	1.	1.	1.	3.	3.	3.	3.	2.	0.	1.	1.	1.	1.	1.	3.	4.	3.	3.	1.	0.	2.	4.	-1.
11	3.	2.	0.	1.	-1.	-1.	3.	3.	3.	3.	5.	5.	2.	3.	6.	4.	6.	7.	2.	4.	6.	0.	4.	6.	3.	7.	-1.
12	3.	1.	2.	1.	-1.	2.	-1.	-1.	3.	4.	4.	3.	3.	2.	1.	0.	2.	2.	1.	1.	0.	1.	1.	3.	2.	4.	-1.
13	4.	2.	3.	7.	4.	1.	3.			5.	2.	0.	1.	-1.	-2.	2.	1.	1.	2.	0.	1.	4.	3.	2.	2.	7.	-2.
14	4.	2.	-1.	-1.	-1.	1.	2.	0.	0.	2.	2.	1.	3.	3.	1.	-2.	-4.	-3.	-1.	1.	1.	1.	1.	-1.	0.	4.	-4.
15	2.	4.	2.	0.	0.	-1.	1.	2.	1.	0.	0.	-4.	-3.	1.	3.	2.	1.	2.	3.	3.	-1.	-2.	1.	1.	1.	4.	-4.
16	3.	5.	1.	-1.	-1.	-3.	-2.	-2.	-1.	1.	2.	2.	2.	3.	3.	-1.	0.	5.	5.	5.	0.	2.	2.	1.	1.	5.	-3.
17	3.	4.	8.	6.	6.	9.	12.	8.	9.	19.	23.	9.	6.	17.	13.	12.	10.	8.	9.	10.	9.	6.	2.	-2.	9.	23.	-2.
18	-1.	5.	4.	1.	3.	3.	1.	0.	2.	2.	0.	2.	3.	1.	1.	2.	5.	4.	3.	3.	3.	3.	4.	3.	2.	5.	-1.
19	0.	1.	2.	3.	3.	2.	2.	1.	1.	1.	1.	5.	6.	4.	3.	1.	3.	3.	3.	3.	0.	1.	3.	2.	2.	6.	0.
20	2.	0.	-3.	-1.	2.	2.	0.	0.	1.	4.	2.	-1.	3.	3.	1.	1.	0.	-1.	-2.	-2.	3.	5.	3.	3.	1.	5.	-3.
21	1.	1.	3.	1.	-2.	3.	3.	1.	2.	3.	2.	2.	6.	10.	14.	3.	5.	8.	5.	3.	7.	9.	10.	8.	5.	14.	-2.
22	1.	4.	8.	6.	6.	6.	5.	5.	13.	3.	3.	4.	4.	1.	3.	5.	4.	5.	4.	0.	1.	1.	0.	0.	4.	13.	0.
23	2.	2.	-1.	-2.	-2.	-2.	-2.	-1.	-2.	-3.	1.	1.	-1.	1.	3.	0.	-2.	-2.	1.	2.	-1.	0.	4.	4.	0.	4.	-3.
24	4.	4.	-2.	-3.	-1.	1.	3.	4.	5.	2.	-1.	3.	2.	0.	3.	1.	0.	2.	4.	5.	3.	3.	0.	-1.	2.	5.	-3.
25	3.	8.	5.	0.	0.	-4.	-3.	0.	0.	1.	3.	1.	0.	1.	2.	-1.	-4.	-2.	1.			3.	4.	2.	1.	8.	-4.
26	-5.	-3.	1.	-1.	1.	1.	-1.	0.	1.	0.	1.	1.	1.	1.	-2.	-3.	-1.	4.	6.	2.	1.	2.	0.	-2.	0.	6.	-5.
27	0.	1.	0.	1.	2.	-1.	0.	1.	2.	3.	0.	-2.	-1.	-1.	-1.	-2.	-1.	1.	2.	1.	0.	1.	3.	2.	0.	3.	-2.
28	-1.	1.	1.	0.	0.	-3.	0.	1.	0.	0.	0.	0.	-2.	-1.	-1.	-4.	-2.	0.	-2.	-1.	0.	1.	1.	-2.	-1.	1.	-4.
29	-1.	0.	0.	0.	0.	0.	0.	0.	-2.	0.	1.	-2.	-3.	0.	-1.	0.	0.	0.	3.	-1.	-2.	-1.	-1.	1.	0.	3.	-3.
30	2.	-3.	-3.	-2.	-3.	-2.	0.	0.	0.	1.	1.	-1.	0.	0.	-2.	1.	7.	9.	6.	1.	0.	0.	-1.	0.	0.	9.	-3.
AVG	3.	4.	3.	2.	2.	2.	2.	2.	3.	3.	5.	3.	5.	7.	6.	4.	3.	4.	4.	3.	3.	3.	4.	3.	3.		
MAX	23.	25.	17.	14.	18.	23.	22.	14.	13.	19.	41.	29.	54.	80.	60.	35.	17.	16.	14.	12.	11.	10.	50.	30.		80.	
MIN	-5.	-3.	-3.	-3.	-3.	-4.	-3.	-2.	-2.	-3.	-1.	-4.	-3.	-1.	-2.	-4.	-4.	-3.	-2.	-2.	-2.	-2.	-1.	-2.			-5.

TOTAL HOURS = 720 NUMBER OF GOOD HOURS = 716 NUMBER OF MISSING HOURS = 4 DATA CAPTURE = 99.44 (PERCENT)

PM-2.5 µg/m3		DATE (DAY,HOUR)			DATE (DAY,HOUR)
MONTHLY AVERAGE	3.				
-- 1HR AVERAGE --			-- 8HR RUNNING AVERAGE --		
HIGHEST AVERAGE	80.	3 14	HIGHEST AVERAGE	36.	3 18
2ND HIGHEST AVG.	60.	3 15	2ND HIGHEST AVG.	36.	3 17
-- 3HR RUNNING AVERAGE --			-- 24HR RUNNING AVERAGE --		
HIGHEST AVERAGE	65.	3 15	HIGHEST AVERAGE	17.	9 17
2ND HIGHEST AVG.	58.	3 16	2ND HIGHEST AVG.	17.	9 18

Wainwright Near-Term Air Quality Monitoring Program - Wainwright, Alaska
SEPTEMBER 2009

SHELTER TEMPERATURE - DEGREES C

HOURS (LST)

HR-BEG	00	01	02	03	04	05	06	07	08	09	10	11	12	13	14	15	16	17	18	19	20	21	22	23			
HR-END	01	02	03	04	05	06	07	08	09	10	11	12	13	14	15	16	17	18	19	20	21	22	23	24			
DAY																									AVG/	MAX/	MIN
1	28.5	28.1	28.1	28.0	27.9	27.7	27.6	27.5	27.5	27.5	27.7	27.8	27.9	28.0	28.3	28.6	28.9	29.1	29.1	29.0	28.8	28.7	28.8	28.9	28.3	29.1	27.5
2	28.9	28.9	29.0	29.0	29.0	28.9	28.8	28.9	28.9	29.0	29.0	29.0	29.1	29.2	29.2	29.3	29.3	29.3	29.1	29.0	28.8	28.7	28.5	28.5	29.0	29.3	28.5
3	28.4	28.3	28.4	28.1	27.9	27.9	27.7	27.6	27.6	27.6	27.4	27.3	27.2	26.7	26.3	26.3	26.1	26.0	26.0	26.1	26.4	26.8	27.0	27.0	27.2	28.4	26.0
4	27.1	27.1	27.3	27.3	27.4	27.5	27.6	27.8	27.8	28.0	28.3	28.5	28.8	29.1	29.7	30.4	31.3	32.2	32.8	32.5	31.8	30.9	30.4	29.9	29.2	32.8	27.1
5	29.6	29.3	29.3	29.1	28.8	28.6	28.2	28.2	28.1	28.0	27.9	28.0	28.2	28.5	28.8	28.9	28.6	28.5	28.5	28.4	28.3	28.3	28.2	28.1	28.5	29.6	27.9
6	28.0	27.7	27.6	27.4	27.2	26.8	26.4	26.2	26.0	26.0	26.1	26.2	26.6	26.9	27.3	28.1	28.8	28.8	28.7	28.7	28.5	28.4	28.3	28.3	27.5	28.8	26.0
7	28.3	28.2	27.7	28.6	28.5	28.4	28.2	28.3	28.4	28.4	28.5	28.7	28.7	28.8	28.8	28.9	29.1	29.4	29.6	29.7	29.4	29.1	28.8	28.5	28.7	29.7	27.7
8	28.3	28.1	28.1	27.9	27.6	27.4	27.1	27.0	27.0	27.0	27.0	26.9	26.8	26.7	26.7	26.7	26.6	26.5	26.3	26.3	26.2	26.1	25.9	25.7	26.9	28.3	25.7
9	25.5	25.4	25.4	25.3	25.2	25.1	25.0	24.9	24.9	24.9	24.9	25.0	25.2	25.4	25.5	25.8	26.0	26.1	26.6	26.8	26.5	26.4	26.3	26.3	25.6	26.8	24.9
10	26.2	26.3	26.4	26.4	26.3	27.6	26.5	26.5	26.7	26.9	27.1	27.4	27.9	28.3	28.5	28.8	29.1	29.0	28.8	28.7	28.6	28.6	28.8	28.8	27.7	29.1	26.2
11	28.6	28.5	28.5	28.5	28.5	28.4	28.4	28.4	28.5	28.5	28.6	28.6	28.7	29.0	29.0	29.0	27.8	26.5	26.2	26.3	26.5	26.6	26.6	26.6	27.9	29.0	26.2
12	26.6	26.7	26.7	27.1	27.0	26.9	26.8	26.8	26.9	27.1	27.3	27.3	27.3	27.2	27.2	27.0	26.6	26.4	26.8	27.0	27.1	27.2	27.4	27.4	27.0	27.4	26.4
13	27.5	27.5	27.8	27.7	27.6	27.6	27.6	27.4	26.9	26.9	27.1	27.2	27.4	27.6	27.7	27.8	27.9	28.0	28.1	28.1	28.0	27.8	27.7	27.7	27.6	28.1	26.9
14	27.7	27.6	27.7	27.6	27.5	27.4	27.3	27.2	27.1	27.1	27.2	27.2	27.4	27.5	27.7	27.9	28.1	28.2	28.1	28.1	28.1	28.0	27.8	27.6	27.6	28.2	27.1
15	27.4	27.2	27.1	26.9	26.9	26.9	26.9	27.0	27.0	27.1	27.2	27.3	27.6	27.8	27.9	28.1	28.2	28.3	28.4	28.4	28.4	28.4	28.4	28.3	27.6	28.4	26.9
16	28.3	28.3	28.4	28.3	28.2	28.1	28.0	27.9	27.8	28.0	28.0	28.0	28.1	28.0	27.9	27.8	27.8	27.5	27.3	27.0	26.7	26.4	26.1	25.9	27.7	28.4	25.9
17	25.8	25.6	25.5	25.4	25.1	24.9	24.7	24.5	24.3	24.3	24.3	24.5	24.5	24.6	24.6	24.6	24.7	24.7	24.7	24.7	24.7	24.8	24.9	25.1	24.8	25.8	24.3
18	25.1	25.1	26.2	25.8	25.7	25.7	25.7	25.7	25.7	25.7	25.8	25.8	25.9	26.0	26.2	26.2	26.2	26.1	26.2	26.3	26.4	26.5	26.5	26.6	26.0	26.6	25.1
19	26.7	26.7	26.9	26.9	27.0	27.0	27.0	27.0	26.9	26.8	26.7	26.8	26.9	27.0	27.1	27.1	27.2	28.0	28.2	27.8	27.4	27.2	27.1	27.1	27.1	28.2	26.7
20	27.0	27.0	26.9	26.7	26.6	26.6	26.3	26.3	26.3	26.3	26.3	26.2	26.1	26.0	26.1	26.1	26.3	26.5	26.4	26.3	26.2	26.0	26.5	29.3	26.5	29.3	26.0
21	31.6	30.1	28.6	28.4	28.0	27.6	27.1	26.7	26.7	26.5	26.1	27.6	29.0	30.0	27.5	27.2	27.2	25.8	24.6	24.4	24.6	24.8	25.9	26.2	27.2	31.6	24.4
22	26.4	27.1	27.2	27.1	27.1	27.2	27.1	27.1	26.9	26.7	27.6	28.1	27.8	26.9	28.0	27.9	26.7	26.1	26.9	26.4	27.0	27.0	31.8	32.2	27.5	32.2	26.1
23	30.2	29.0	28.8	28.6	28.8	29.1	28.5	28.8	28.6	28.6	28.7	28.7	28.7	28.8	28.5	28.3	28.6	28.0	28.3	28.4	27.9	27.8	28.6	28.3	28.6	30.2	27.8
24	27.9	27.8	28.1	27.9	27.9	28.3	28.7	29.0	28.7	28.6	28.7	28.5	28.9	28.6	29.2	29.3	29.5	28.9	28.7	28.5	28.5	28.4	28.5	28.3	28.6	29.5	27.8
25	28.4	28.6	28.3	28.5	28.5	27.9	28.8	28.3	28.7	28.8	28.9	28.7	29.1	28.8	29.0	28.6	28.4	28.3	28.5	28.4	27.7	27.4	27.2	27.0	28.4	29.1	27.0
26	27.0	27.1	27.4	27.3	27.1	27.0	26.9	26.9	26.8	26.7	26.7	26.6	26.5	26.5	26.7	27.0	28.1	28.8	28.7	28.0	27.6	27.7	27.9	27.7	27.3	28.8	26.5
27	27.8	27.9	28.3	28.4	28.4	28.2	28.2	28.0	27.4	27.0	26.6	26.5	26.5	26.7	27.1	28.0	29.0	29.4	28.7	28.2	27.9	27.7	27.6	27.6	27.8	29.4	26.5
28	27.6	27.5	27.8	27.6	27.4	27.3	27.9	27.5	27.1	26.8	26.5	26.4	26.3	26.3	26.5	26.9	27.1	27.4	27.1	26.9	26.8	26.6	26.5	26.3	27.0	27.9	26.3
29	26.1	26.0	26.1	25.8	25.6	25.3	25.0	24.8	24.6	24.6	24.6	25.2	25.3	25.0	25.0	25.2	25.1	25.6	25.6	25.4	25.5	25.6	25.8	26.0	25.4	26.1	24.6
30	26.2	26.3	26.8	26.9	27.0	27.1	27.2	27.0	26.7	26.5	26.3	26.1	26.0	25.8	26.0	26.1	26.1	25.8	25.7	25.9	26.1	26.2	26.3	26.4	26.4	27.2	25.7
AVG	27.6	27.5	27.5	27.5	27.4	27.3	27.2	27.2	27.1	27.1	27.1	27.2	27.3	27.4	27.5	27.6	27.7	27.6	27.6	27.5	27.4	27.3	27.5	27.6	27.4		
MAX	31.6	30.1	29.3	29.1	29.0	29.1	28.8	29.0	28.9	29.0	29.0	29.0	29.1	30.0	29.7	30.4	31.3	32.2	32.8	32.5	31.8	30.9	31.8	32.2		32.8	
MIN	25.1	25.1	25.4	25.3	25.1	24.9	24.7	24.5	24.3	24.3	24.3	24.5	24.5	24.6	24.6	24.6	24.7	24.7	24.6	24.4	24.6	24.8	24.9	25.1			24.3

TOTAL HOURS = 720 NUMBER OF GOOD HOURS = 720 NUMBER OF MISSING HOURS = 0 DATA CAPTURE = 100.00 (PERCENT)

SHELTER TEMPERATURE DEGREES C		DATE (DAY,HOUR)	
MONTHLY AVERAGE	27.4		
MONTHLY MAXIMUM	32.8	4	19
MONTHLY MINIMUM	24.3	17	9

Wainwright Near-Term Air Quality Monitoring Program - Wainwright, Alaska
September 2009

PM_{10} and $PM_{2.5}$ – µg/m^3

Date			Concentration (Actual)	
Year	**Month**	**Day**	**PM_{10}**	**$PM_{2.5}$**
2009	9	1	20	4
2009	9	2	21	3
2009	9	3	19	14
2009	9	4	24	6
2009	9	5	50	13
2009	9	6	18	3
2009	9	7	8	1
2009	9	8	6	6
2009	9	9	4	15
2009	9	10	5	2
2009	9	11	7	3
2009	9	12	4	2
2009	9	13	3	2
2009	9	14	3	0
2009	9	15	3	1
2009	9	16	3	1
2009	9	17	8	9
2009	9	18	10	2
2009	9	19	13	2
2009	9	20	9	1
2009	9	21	25	5
2009	9	22	27	4
2009	9	23	8	0
2009	9	24	15	2
2009	9	25	6	1
2009	9	26	10	0
2009	9	27	7	0
2009	9	28	6	-1
2009	9	29	12	0
2009	9	30	51	0
Average			14	3
Maximum			51	15
Minimum			3	-1

Wainwright Near-Term Air Quality Monitoring Program - Wainwright, Alaska
OCTOBER 2009

10-M HORZ WS - M/S

HOURS (LST)

HR-BEG	00	01	02	03	04	05	06	07	08	09	10	11	12	13	14	15	16	17	18	19	20	21	22	23			
HR-END	01	02	03	04	05	06	07	08	09	10	11	12	13	14	15	16	17	18	19	20	21	22	23	24			
DAY																									AVG/	MAX/	MIN
1	5.	5.	5.	4.	4.	4.	7.	5.	4.	4.	7.	7.	6.	6.	8.	8.	7.	9.	8.	8.	9.	8.	9.	9.	7.	9.	4.
2	6.	8.	7.	8.	8.	8.	9.	8.	7.	7.	5.	6.	6.	6.	6.	8.	8.	4.	8.	9.	8.	9.	7.	8.	7.	9.	4.
3	7.	6.	7.	6.	7.	7.	6.	6.	9.	9.	7.	7.	10.	12.	10.	11.	11.	9.	11.	10.	7.	9.	9.	8.	8.	12.	6.
4	7.	10.	9.	7.	7.	8.	9.	9.	9.	9.	11.	10.	10.	10.	10.	9.	9.	8.	6.	8.	7.	7.	8.	7.	9.	11.	6.
5	7.	7.	5.	5.	5.	5.	6.	7.	6.	6.	6.	4.	5.	5.	4.	4.	5.	4.	3.	3.	3.	3.	3.	3.	5.	7.	3.
6	3.	3.	4.	3.	4.	4.	6.	5.	5.	5.	4.	4.	5.	6.	6.	6.	5.	4.	3.	4.	4.	4.	4.	4.	4.	6.	3.
7	5.	6.	8.	7.	9.	9.	9.	10.	9.	9.	9.	9.	9.	10.	8.	9.	10.	13.	11.	13.	12.	12.	11.	12.	10.	13.	5.
8	14.	14.	13.	14.	12.	14.	13.	10.	12.	11.	9.	10.	12.	10.	9.	9.	6.	7.	8.	7.	7.	6.	5.	4.	10.	14.	4.
9	3.	4.	4.	4.	4.	5.	4.	6.	6.	4.	4.	2.	1.	2.	2.	3.	3.	3.	3.	4.	3.	3.	3.	3.	3.	6.	1.
10	3.	3.	3.	4.	4.	4.	6.	4.	6.	7.	7.	8.	9.	9.	9.	9.	8.	8.	10.	8.	7.	7.	7.	6.	7.	10.	3.
11	7.	7.	6.	7.	8.	6.	4.	4.	4.	5.	5.	6.	5.	4.	4.	3.	4.	3.	4.	4.	3.	4.	3.	3.	5.	8.	3.
12	3.	3.	4.	4.	4.	3.	4.	4.	4.	3.	3.	4.	3.	3.	3.	3.	1.	4.	1.	1.	3.	3.	3.	3.	3.	4.	1.
13	3.	3.	3.	2.	3.	3.	3.	3.	3.	3.	3.	3.	3.	2.	3.	2.	3.	2.	3.	3.	3.	3.	4.	4.	3.	4.	2.
14	3.	4.	4.	3.	4.	4.	4.	4.	4.	3.	3.	4.	3.	3.	3.	3.	4.	3.	4.	4.	3.	3.	4.	4.	4.	4.	3.
15	4.	3.	4.	4.	3.	4.	4.	4.	4.	4.	4.	4.	4.	6.	5.	4.	4.	4.	4.	4.	5.	3.	5.	5.	4.	6.	3.
16	4.	4.	6.	5.	5.	4.	4.	4.	5.	4.	6.	5.	6.	5.	4.	5.	4.	5.	4.	4.	4.	5.	3.	4.	5.	6.	3.
17	5.	4.	4.	4.	5.	4.	4.	5.	4.	4.	5.	7.	6.	7.	6.	3.	5.	6.	4.	5.	4.	4.	7.	4.	5.	7.	3.
18	4.	6.	5.	4.	3.	3.	3.	3.	3.	3.	4.	4.	4.	3.	4.	3.	3.	2.	2.	1.	2.	3.	4.	4.	3.	6.	1.
19	2.	3.	4.	4.	3.	4.	6.	4.	4.	6.	6.	4.	4.	4.	4.	3.	3.	4.	3.	3.	4.	2.	4.	4.	4.	6.	2.
20	4.	5.	4.	4.	3.	4.	3.	3.	3.	3.	4.	3.	2.	2.	3.	3.	3.	3.	3.	3.	3.	3.	3.	4.	3.	5.	2.
21	4.	3.	7.	6.	9.	9.	10.	7.	10.	5.	6.	7.	6.	7.	6.	7.	6.	5.	9.	9.	9.	9.	11.	12.	7.	12.	3.
22	13.	13.	13.	14.	14.	14.	10.	10.	11.	10.	12.	11.	12.	13.	14.	13.	13.	11.	13.	11.	9.	9.	10.	9.	12.	14.	9.
23	10.	11.	11.	11.	9.	9.	9.	8.	8.	9.	9.	8.	8.	7.	6.	7.	6.	6.	5.	5.	6.	6.	6.	6.	8.	11.	5.
24	4.	4.	4.	5.	4.	3.	3.	4.	4.	5.	5.	4.	6.	4.	4.	5.	5.	4.	5.	4.	4.	4.	4.	5.	4.	6.	3.
25	5.	4.	5.	4.	3.	3.	3.	4.	4.	4.	4.	4.	4.	4.	4.	3.	3.	3.	1.	1.	1.	1.	2.	2.	3.	5.	1.
26	1.	1.	2.	2.	2.	2.	2.	2.	3.	1.	2.	3.	3.	3.	3.	3.	3.	3.	2.	4.	4.	4.	4.	3.	3.	4.	1.
27	8.	6.	6.	6.	6.	7.	6.	8.	6.	5.	6.	4.	6.	6.	7.	6.	7.	8.	10.	10.	12.	9.	8.	6.	7.	12.	4.
28	5.	4.	4.	4.	3.	3.	1.	1.	1.	2.	2.	2.	3.	3.	1.	5.	4.	1.	2.	2.	3.	3.	4.	4.	3.	5.	1.
29	4.	4.	3.	3.	4.	4.	4.	5.	5.	5.	5.	7.	6.	7.	7.	6.	7.	5.	6.	6.	9.	8.	7.	8.	6.	9.	3.
30	9.	9.	8.	7.	8.	8.	8.	6.	7.	7.	7.	5.	5.	7.	6.	5.	7.	6.	6.	10.	9.	9.	8.	8.	7.	10.	5.
31	8.	8.	7.	6.	7.	7.	8.	7.	8.	7.	8.	8.	8.	6.	5.	4.	8.	7.	9.	8.	8.	8.	7.	7.	7.	9.	4.
AVG	5.	6.	6.	6.	6.	6.	6.	5.	6.	5.	6.	6.	6.	6.	6.	6.	6.	5.	6.	6.	6.	6.	6.	6.	6.		
MAX	14.	14.	13.	14.	14.	14.	13.	10.	12.	11.	12.	11.	12.	13.	14.	13.	13.	13.	13.	13.	12.	12.	11.	12.		14.	
MIN	1.	1.	2.	2.	2.	2.	1.	1.	1.	1.	2.	2.	1.	2.	1.	2.	1.	1.	1.	1.	1.	1.	2.	2.			1.

TOTAL HOURS = 744 NUMBER OF GOOD HOURS = 744 NUMBER OF MISSING HOURS = 0 DATA CAPTURE = 100.00 (PERCENT)

10-M HORZ WS M/S		DATE (DAY,HOUR)	
MONTHLY AVERAGE	6.		
MONTHLY MAXIMUM	14.	8	1
MONTHLY MINIMUM	1.	9	13

Wainwright Near-Term Air Quality Monitoring Program - Wainwright, Alaska
OCTOBER 2009

10-M WIND DIRECTION - DEGREES

HOURS (LST)

HR-BEG	00	01	02	03	04	05	06	07	08	09	10	11	12	13	14	15	16	17	18	19	20	21	22	23
HR-END	01	02	03	04	05	06	07	08	09	10	11	12	13	14	15	16	17	18	19	20	21	22	23	24
DAY																								
1	70	90	80	90	80	70	100	90	70	80	90	90	70	100	110	90	100	110	100	110	110	110	120	110
2	110	110	110	90	110	100	110	110	100	90	100	100	110	120	100	100	100	100	90	90	90	80	70	70
3	60	60	70	60	70	80	70	60	60	60	60	60	70	60	60	60	60	60	60	50	50	50	50	50
4	50	60	70	70	60	60	60	60	60	60	60	60	60	60	60	60	60	60	50	60	60	60	60	60
5	60	60	50	60	60	70	60	50	40	40	40	50	50	50	40	50	60	50	60	50	30	40	40	50
6	50	60	60	60	60	70	80	70	80	90	80	80	90	80	80	80	70	60	50	60	70	80	90	70
7	90	80	80	80	100	90	80	80	90	90	80	70	70	80	70	80	70	80	80	90	80	80	80	80
8	90	90	80	80	80	80	80	70	70	80	80	80	80	80	80	80	90	90	90	100	90	100	90	100
9	90	90	90	90	90	90	90	110	110	110	120	130	140	140	137	133	130	120	120	120	130	180	270	290
10	310	175	40	30	20	30	30	30	30	30	40	40	40	40	40	40	50	50	50	60	50	50	70	80
11	80	70	90	90	60	80	100	70	70	60	70	60	70	90	100	90	110	90	110	110	120	130	160	180
12	165	150	140	140	130	140	120	130	130	130	130	130	130	140	110	130	150	230	150	190	160	173	187	200
13	140	150	150	180	170	130	170	140	160	120	160	140	130	150	150	130	160	150	150	160	150	120	150	150
14	150	160	160	150	190	170	150	180	180	150	170	180	180	170	190	190	190	190	180	200	180	190	180	200
15	210	200	210	210	200	220	210	210	210	190	190	190	200	210	220	220	230	220	200	200	200	190	210	210
16	210	220	220	210	200	190	200	240	230	250	260	260	240	250	260	250	250	250	250	260	240	270	250	240
17	210	200	210	200	200	190	190	190	190	190	190	200	210	220	280	290	260	250	240	240	250	250	210	220
18	210	260	210	200	200	180	150	130	190	190	190	200	190	200	220	230	170	180	180	190	120	50	50	50
19	50	50	50	40	50	50	60	90	70	70	70	80	80	80	90	80	70	60	40	40	40	70	30	80
20	70	90	90	80	40	60	80	90	30	50	60	60	50	50	20	40	30	20	50	60	50	50	40	40
21	60	50	30	50	30	40	30	50	40	50	50	60	50	40	50	50	60	50	60	60	50	50	50	40
22	40	40	40	40	40	40	50	50	50	50	60	60	60	60	60	60	60	60	60	60	60	60	60	60
23	50	60	60	60	50	50	50	50	50	40	50	50	40	40	50	40	40	40	40	50	40	40	50	50
24	50	60	60	60	60	50	50	70	70	80	70	60	70	80	70	60	50	60	80	80	90	90	70	80
25	80	80	90	80	80	80	80	70	80	100	90	90	100	90	90	70	90	90	100	77	53	30	40	50
26	60	81	103	124	146	167	189	210	220	200	200	200	180	170	150	140	170	190	160	180	210	210	270	280
27	280	310	310	310	300	310	300	300	290	270	280	270	270	250	230	230	240	230	210	210	210	200	200	240
28	285	330	310	300	310	350	350	275	200	233	265	298	330	300	290	280	300	310	50	170	130	140	150	140
29	140	140	130	150	130	130	140	140	140	160	150	150	150	150	140	140	140	140	140	130	140	140	140	130
30	130	130	130	130	130	130	130	130	120	120	120	130	110	120	110	110	100	100	100	120	120	120	120	120
31	120	120	120	120	120	120	130	130	120	120	130	120	120	120	100	90	100	100	100	100	110	110	110	110

TOTAL HOURS = 744 NUMBER OF GOOD HOURS = 744 NUMBER OF MISSING HOURS = 0 DATA CAPTURE = 100.00 (PERCENT)

Wainwright Near-Term Air Quality Monitoring Program - Wainwright, Alaska
OCTOBER 2009

10-M TEMPERATURE - DEGREES C

HOURS (LST)

HR-BEG	00	01	02	03	04	05	06	07	08	09	10	11	12	13	14	15	16	17	18	19	20	21	22	23			
HR-END	01	02	03	04	05	06	07	08	09	10	11	12	13	14	15	16	17	18	19	20	21	22	23	24			
DAY																									AVG/	MAX/	MIN
1	-5.0	-5.0	-5.6	-5.0	-5.6	-6.1	-5.6	-5.6	-5.6	-5.0	-5.0	-4.4	-4.4	-4.4	-5.0	-5.0	-5.0	-5.0	-5.0	-5.6	-6.1	-6.1	-6.7	-6.7	-5.4	-4.4	-6.7
2	-6.7	-6.7	-6.7	-7.2	-7.8	-7.8	-7.2	-8.3	-7.8	-7.8	-7.8	-7.2	-5.6	-5.0	-4.4	-4.4	-4.4	-4.4	-4.4	-4.4	-5.0	-5.6	-5.6	-5.6	-6.2	-4.4	-8.3
3	-6.7	-8.3	-8.9	-8.9	-7.8	-7.2	-6.7	-5.0	-2.8	-2.2	-1.7	-1.7	-1.7	-1.7	-2.2	-2.2	-2.2	-2.2	-2.2	-1.7	-1.7	-1.7	-1.7	-1.7	-3.8	-1.7	-8.9
4	-1.7	-1.7	-1.7	-1.7	-1.7	-1.7	-1.7	-2.2	-2.2	-2.2	-2.2	-2.2	-1.7	-2.2	-2.2	-1.7	-1.7	-1.7	-2.8	-2.8	-2.8	-2.8	-3.3	-3.3	-2.2	-1.7	-3.3
5	-3.3	-3.9	-3.9	-4.4	-3.9	-3.3	-2.8	-2.2	-2.2	-2.2	-2.2	-2.2	-2.2	-1.7	-1.1	-1.1	-1.1	-1.7	-3.3	-3.9	-2.2	-2.2	-1.7	-1.7	-2.5	-1.1	-4.4
6	-1.7	-2.2	-2.2	-2.8	-2.2	-2.2	-2.8	-3.3	-3.3	-3.3	-3.3	-3.3	-2.8	-2.8	-2.8	-2.8	-3.3	-5.0	-7.2	-7.8	-7.2	-7.2	-8.3	-8.9	-4.1	-1.7	-8.9
7	-7.8	-6.7	-6.1	-5.6	-5.0	-5.0	-4.4	-4.4	-5.0	-5.0	-4.4	-3.3	-3.3	-3.3	-3.9	-3.9	-3.3	-2.8	-2.2	-2.2	-2.8	-2.8	-2.8	-2.8	-4.1	-2.2	-7.8
8	-2.2	-2.8	-2.8	-2.8	-3.3	-3.3	-2.8	-3.3	-2.8	-2.2	-2.2	-2.8	-1.7	-1.7	-1.1	-0.6	-1.1	-1.7	-2.2	-2.2	-2.2	-2.2	-2.2	-2.8	-2.3	-0.6	-3.3
9	-2.8	-2.2	-2.2	-1.7	-1.1	-0.6	-0.6	-0.6	-0.6	-0.2	0.2	0.6	1.7	2.2	1.1	2.2	1.7	1.7	1.7	0.6	0.9	1.1	1.7	0.6	0.2	2.2	-2.8
10	2.2	-1.1	-1.1	1.7	2.8	1.1	0.6	0.8	0.9	1.1	1.7	1.7	1.7	1.7	1.1	1.1	1.1	0.6	0.6	1.1	0.6	0.6	0.6	0.6	1.0	2.8	-1.1
11	0.6	0.6	0.6	0.6	0.6	0.6	0.5	0.4	0.4	0.3	0.2	0.1	0.0	0.0	-0.1	-0.2	-0.3	-0.4	-0.4	-0.5	-0.6	-0.6	-0.6	-0.2	0.1	0.6	-0.6
12	0.2	0.6	-0.6	-1.1	-0.6	-0.6	-0.6	-0.6	-0.6	-0.6	0.6	1.7	2.2	2.8	3.3	3.3	2.2	3.9	2.8	2.2	1.1	1.7	1.7	2.2	1.1	3.9	-1.1
13	1.7	0.6	0.6	0.6	0.6	-0.6	-1.1	-1.7	-2.2	-2.2	-1.7	-0.6	0.6	0.6	0.6	-0.6	-0.6	-0.6	-0.6	-0.6	-1.1	-1.7	-1.7	-1.7	-0.6	1.7	-2.2
14	-2.8	-2.8	-2.8	-3.3	-3.3	-2.8	-3.9	-2.8	-2.8	-3.3	-1.7	-1.1	-0.6	-0.6	0.6	0.6	0.6	0.6	0.6	0.6	0.6	0.6	0.6	0.6	-1.2	0.6	-3.9
15	0.6	0.6	0.6	0.0	-0.6	-0.6	-0.6	-0.6	-0.9	-1.1	-0.6	-0.6	0.0	0.6	0.6	0.3	-0.1	-0.4	-0.8	-1.1	-1.1	-1.1	-1.1	-1.1	-0.4	0.6	-1.1
16	-1.7	-0.6	-1.7	-1.7	-2.2	-2.8	-2.8	-1.7	-1.7	-1.1	-1.1	-0.6	-0.6	-0.6	-0.6	-0.6	-1.1	-1.1	-1.1	-1.1	-1.1	-1.1	-0.6	-1.1	-1.3	-0.6	-2.8
17	-2.2	-2.2	-2.2	-2.8	-2.2	-2.8	-2.8	-2.8	-3.3	-2.8	-2.2	-1.7	-1.1	-1.1	-0.9	-0.6	-0.6	-0.6	-0.6	-0.6	-1.1	-1.1	-1.7	-2.2	-1.8	-0.6	-3.3
18	-2.2	-0.6	-1.7	-3.3	-6.1	-6.7	-5.6	-4.4	-3.9	-4.4	-3.9	-3.3	-3.3	-2.8	-1.7	-2.2	-3.3	-3.9	-5.6	-6.1	-5.0	-4.4	-7.2	-6.1	-4.1	-0.6	-7.2
19	-6.1	-6.7	-8.3	-8.3	-6.7	-5.6	-3.9	-3.9	-4.4	-5.0	-5.6	-5.6	-6.7	-6.1	-5.6	-6.1	-8.3	-11.1	-10.0	-8.3	-10.0	-8.3	-7.8	-8.3	-6.9	-3.9	-11.1
20	-8.3	-8.3	-7.8	-8.9	-7.8	-7.2	-6.7	-7.2	-7.8	-8.3	-9.4	-10.0	-8.3	-6.7	-7.2	-6.7	-6.7	-6.7	-6.7	-7.2	-7.2	-7.8	-6.7	-6.7	-7.6	-6.7	-10.0
21	-6.7	-6.7	-6.7	-6.1	-5.0	-5.0	-5.0	-6.7	-6.7	-6.7	-7.2	-8.3	-7.8	-7.2	-7.2	-7.2	-7.2	-7.2	-6.7	-6.7	-6.7	-6.7	-6.7	-6.7	-6.7	-5.0	-8.3
22	-6.7	-6.1	-5.6	-5.6	-5.6	-5.0	-3.9	-3.9	-3.9	-3.9	-3.9	-3.9	-3.9	-3.9	-3.9	-3.9	-3.9	-3.9	-3.3	-3.3	-3.3	-3.3	-3.3	-2.8	-4.2	-2.8	-6.7
23	-2.8	-2.8	-2.8	-3.3	-2.8	-3.3	-3.3	-2.8	-2.8	-2.8	-2.8	-2.8	-2.8	-2.8	-2.2	-2.2	-2.2	-2.2	-2.2	-1.7	-2.0	-1.7	-1.7	-1.7	-2.5	-1.7	-3.3
24	-1.7	-2.2	-2.2	-2.2	-2.8	-3.9	-2.8	-2.8	-2.8	-2.8	-3.3	-2.8	-2.2	-2.2	-2.8	-4.4	-5.0	-6.7	-7.2	-9.4	-8.3	-8.9	-8.3	-8.9	-4.4	-1.7	-9.4
25	-10.0	-10.6	-10.6	-11.1	-11.7	-12.2	-13.3	-13.3	-12.2	-10.6	-10.0	-9.4	-8.3	-8.3	-8.9	-10.6	-8.3	-6.7	-5.6	-5.0	-4.4	-5.0	-5.0	-5.0	-9.0	-4.4	-13.3
26	-4.4	-3.9	-3.3	-3.3	-2.8	-2.8	-2.8	-3.3	-3.3	-3.9	-3.3	-3.9	-3.9	-3.9	-3.9	-3.9	-4.0	-2.8	-3.3	-2.0	-2.2	-2.2	-1.4	-0.6	-3.1	-0.6	-4.4
27	-0.6	-0.6	-0.6	-0.6	-1.1	-1.1	-1.7	-1.7	-2.2	-2.2	-2.2	-2.2	-2.2	-2.8	-2.2	-2.2	-2.2	-2.2	-2.8	-2.8	-2.8	-3.0	-3.3	-2.2	-2.0	-0.6	-3.3
28	-1.1	-1.1	-1.1	-1.7	-1.7	-1.7	-2.2	-2.8	-3.3	-2.8	-3.3	-3.3	-1.7	-1.7	-1.7	-2.2	-2.8	-2.8	-3.9	-8.9	-10.6	-12.2	-12.8	-13.3	-4.2	-1.1	-13.3
29	-13.3	-13.9	-12.2	-10.6	-10.6	-11.1	-12.8	-11.1	-10.0	-8.9	-8.3	-7.2	-7.2	-7.8	-7.8	-7.8	-7.8	-7.8	-7.2	-7.8	-8.9	-8.9	-8.9	-8.3	-9.4	-7.2	-13.9
30	-7.8	-8.3	-9.4	-10.0	-10.6	-11.1	-11.1	-10.6	-11.7	-12.8	-12.8	-12.8	-12.8	-12.2	-11.7	-11.1	-13.3	-13.9	-14.4	-12.2	-13.3	-12.8	-13.9	-15.0	-11.9	-7.8	-15.0
31	-14.4	-14.4	-14.4	-15.0	-15.6	-12.8	-10.0	-10.0	-10.6	-12.2	-10.0	-9.4	-9.4	-10.0	-11.1	-11.7	-10.6	-10.6	-10.6	-13.9	-15.0	-14.4	-12.2	-11.7	-12.1	-9.4	-15.6
AVG	-4.0	-4.2	-4.3	-4.4	-4.3	-4.4	-4.2	-4.1	-4.1	-4.1	-3.9	-3.6	-3.2	-3.1	-3.1	-3.2	-3.4	-3.5	-3.8	-4.0	-4.2	-4.3	-4.3	-4.3	-3.9		
MAX	2.2	0.6	0.6	1.7	2.8	1.1	0.6	0.8	0.9	1.1	1.7	1.7	2.2	2.8	3.3	3.3	2.2	3.9	2.8	2.2	1.1	1.7	1.7	2.2		3.9	
MIN	-14.4	-14.4	-14.4	-15.0	-15.6	-12.8	-13.3	-13.3	-12.2	-12.8	-12.8	-12.8	-12.8	-12.2	-11.7	-11.7	-13.3	-13.9	-14.4	-13.9	-15.0	-14.4	-13.9	-15.0			-15.6

TOTAL HOURS = 744 NUMBER OF GOOD HOURS = 744 NUMBER OF MISSING HOURS = 0 DATA CAPTURE = 100.00 (PERCENT)

10-M TEMPERATURE DEGREES C		DATE (DAY,HOUR)	
MONTHLY AVERAGE	-3.9		
MONTHLY MAXIMUM	3.9	12	18
MONTHLY MINIMUM	-15.6	31	5

Wainwright Near-Term Air Quality Monitoring Program - Wainwright, Alaska
OCTOBER 2009

NITROGEN OXIDES - PPM

HOURS (LST)

HR-BEG	00	01	02	03	04	05	06	07	08	09	10	11	12	13	14	15	16	17	18	19	20	21	22	23			
HR-END	01	02	03	04	05	06	07	08	09	10	11	12	13	14	15	16	17	18	19	20	21	22	23	24			
DAY																									AVG/	MAX/	MIN
1	0.000	0.000	0.000	0.000	0.000	0.000	0.000	0.000						0.001	0.000	0.001	0.001	0.001	0.000	0.000	0.000	0.000	0.000	0.000	0.000	0.001	0.000
2	0.000	0.000		0.000	0.000	0.000	0.000	0.000	0.000	0.000	0.001	0.000	0.000	0.000	0.000	0.000	0.001	0.000	0.000	0.000	0.000	0.000	0.000	0.000	0.000	0.001	0.000
3	0.000	0.000	0.000	0.000	0.000	0.000	0.000	0.000	0.000	0.000	0.000	0.000	0.000	0.000	0.001	0.001	0.000	0.001	0.000	0.000	0.000	0.000	0.000	0.000	0.000	0.001	0.000
4	0.000	0.000	0.000	0.000	0.000	0.000	0.000	0.000	0.000	0.000	0.000	0.000	0.000	0.000	0.000	0.000	0.000	0.000	0.000	0.000	0.001	0.000	0.000	0.000	0.000	0.001	0.000
5	0.000	0.000	0.000	0.000	0.000	0.000	0.000		0.001	0.001	0.001	0.000	0.001	0.003	0.000	0.001	0.000	0.001	0.000	0.000	0.000	0.000	0.000	0.000	0.000	0.003	0.000
6	0.000	0.000	0.000	0.000	0.000	0.000	0.000	0.000	0.014	0.000	0.000	0.000	0.001	0.001	0.000	0.000	0.000	0.000	0.000	0.000	0.000	0.000	0.000	0.001	0.001	0.014	0.000
7	0.001	0.000	0.000	0.000	0.000	0.000	0.000	0.000	0.001	0.001	0.001	0.000	0.000	0.000	0.000	0.001	0.000	0.000	0.000	0.000	0.000	0.000	0.000	0.000	0.000	0.001	0.000
8	0.000	0.000	0.000	0.000	0.000	0.000	0.000	0.000	0.001	0.000	0.001	0.001	0.001	0.002	0.001	0.001	0.001	0.002	0.000	0.002	0.001	0.001	0.000	0.000	0.001	0.002	0.000
9	0.000	0.000		0.000	0.000	0.000	0.000	0.000	0.000	0.000	0.000	0.000	0.000	0.000	0.001	0.001	0.000	0.001	0.000	0.000	0.000	0.000	0.002	0.001	0.000	0.002	0.000
10	0.001	0.001	0.000	0.000	0.000	0.000	0.000	0.001	0.000	0.000	0.000	0.000	0.001	0.001	0.000	0.000	0.000	0.001	0.000	0.000	0.000	0.000	0.000	0.000	0.000	0.001	0.000
11	0.000	0.000	0.000	0.000	0.000	0.000	0.000	0.000	0.000	0.000	0.000	0.000	0.001	0.001	0.000	0.000	0.000	0.000	0.000	0.000	0.000	0.000	0.000	0.000	0.000	0.001	0.000
12	0.001	0.001	0.001	0.000	0.000	0.000	0.000	0.001	0.001	0.001	0.001	0.000	0.000	0.001	0.000	0.000	0.001	0.002	0.002	0.001	0.004	0.003	0.003	0.000	0.001	0.004	0.000
13	0.000	0.000	0.000	0.000	0.000	0.000	0.000			0.002	0.002	0.000	0.000	0.001	0.003	0.001	0.000	0.000	0.000	0.000	0.000	0.000	0.001	0.001	0.001	0.003	0.000
14	0.000	0.001	0.000	0.000	0.001	0.000	0.000	0.000	0.000	0.000	0.000	0.000	0.000	0.000	0.000	0.001	0.001	0.001	0.001	0.000	0.000	0.000	0.000	0.000	0.000	0.001	0.000
15	0.001	0.000	0.001	0.001	0.001	0.002	0.001	0.001	0.001	0.002	0.002	0.000	0.001	0.000	0.000	0.001	0.001	0.001	0.000	0.000	0.000	0.000	0.000	0.001	0.001	0.002	0.000
16	0.000	0.001		0.001	0.000	0.000	0.000	0.001	0.000	0.001	0.001	0.000	0.001	0.001	0.001	0.001	0.001	0.000	0.000	0.000	0.001	0.000	0.001	0.001	0.001	0.001	0.000
17	0.001	0.000	0.000	0.001	0.000	0.000	0.001	0.000	0.000	0.000	0.000	0.000	0.000	0.001	0.000	0.001	0.001	0.000	0.000	0.000	0.000	0.001	0.001	0.001	0.000	0.001	0.000
18	0.000	0.000	0.000	0.000	0.001	0.001	0.000	0.001	0.000	0.000	0.001	0.001	0.001	0.001	0.001	0.002	0.001	0.000	0.000	0.000	0.003	0.002	0.000	0.000	0.001	0.003	0.000
19	0.000	0.000	0.000	0.000	0.000	0.000	0.000	0.000	0.001	0.000	0.000	0.000	0.001	0.000	0.000	0.000	0.001	0.000	0.000	0.000	0.000	0.000	0.000	0.000	0.000	0.001	0.000
20	0.000	0.000	0.000	0.000	0.000	0.000		0.001	0.005	0.010	0.003	0.000	0.001	0.001	0.001	0.001	0.001	0.002	0.000	0.000	0.000	0.000	0.000	0.000	0.001	0.010	0.000
21	0.000	0.000	0.000	0.000	0.000	0.000	0.000	0.001	0.003	0.001	0.002	0.000	0.001	0.000	0.000	0.001	0.000	0.000	0.000	0.000	0.000	0.000	0.000	0.000	0.000	0.003	0.000
22	0.000	0.000	0.000	0.000	0.000	0.000	0.000	0.002	0.000	0.006	0.010	0.000	0.003	0.004	0.000	0.000	0.000	0.000	0.000	0.000	0.000	0.000	0.000	0.000	0.001	0.010	0.000
23	0.000	0.000		0.000	0.000	0.000	0.000	0.000	0.003	0.001	0.001	0.000	0.002	0.001	0.000	0.001	0.000	0.001	0.000	0.000	0.000	0.000	0.000	0.000	0.000	0.003	0.000
24	0.000	0.000	0.000	0.000	0.000	0.000	0.000	0.001	0.000	0.000	0.000	0.000	0.001	0.000	0.001	0.001	0.001	0.002	0.001	0.001	0.001	0.001	0.001	0.000	0.001	0.002	0.000
25	0.001	0.001	0.001	0.001	0.000	0.000	0.000	0.001	0.000	0.000	0.001	0.000	0.000	0.001	0.001	0.002	0.002	0.002	0.001	0.003	0.010	0.001	0.002	0.000	0.001	0.010	0.000
26	0.000	0.000	0.000	0.000	0.004	0.018	0.007	0.012			0.013	0.027	0.002	0.008	0.001	0.002	0.001	0.001	0.000	0.006	0.005	0.006	0.001	0.000	0.005	0.027	0.000
27	0.000	0.000	0.000	0.000	0.000	0.000	0.000	0.001	0.004	0.002	0.001	0.002	0.001	0.001	0.000	0.000	0.001	0.000	0.001	0.002	0.001	0.003	0.002	0.002	0.001	0.004	0.000
28	0.002	0.002	0.000	0.001	0.000	0.004	0.004	0.003			0.001	0.011	0.014	0.031	0.011	0.001	0.001	0.003	0.002	0.000	0.000	0.000	0.000	0.000	0.004	0.031	0.000
29	0.000	0.001	0.000	0.000	0.000	0.001	0.001	0.001	0.001	0.000	0.000	0.000	0.000	0.002	0.001	0.001	0.001	0.001	0.001	0.001	0.001	0.001	0.001	0.000	0.001	0.002	0.000
30	0.000	0.000		0.000	0.000	0.000	0.001	0.001	0.001	0.000	0.000	0.000	0.001	0.002	0.000	0.000	0.000	0.001	0.001	0.000	0.000	0.000	0.000	0.000	0.000	0.002	0.000
31	0.000	0.000	0.000	0.000	0.000	0.000	0.000	0.000	0.001	0.000	0.000	0.000	0.000	0.000	0.000	0.000	0.000	0.000	0.000	0.000	0.000	0.000	0.000	0.000	0.000	0.001	0.000
AVG	0.000	0.000	0.000	0.000	0.000	0.001	0.001	0.001	0.001	0.001	0.001	0.001	0.001	0.002	0.001	0.001	0.001	0.001	0.000	0.001	0.001	0.001	0.000	0.000	0.001		
MAX	0.002	0.002	0.001	0.001	0.004	0.018	0.007	0.012	0.014	0.010	0.013	0.027	0.014	0.031	0.011	0.002	0.002	0.003	0.002	0.006	0.010	0.006	0.003	0.002		0.031	
MIN	0.000	0.000	0.000	0.000	0.000	0.000	0.000	0.000	0.000	0.000	0.000	0.000	0.000	0.000	0.000	0.000	0.000	0.000	0.000	0.000	0.000	0.000	0.000	0.000			0.000

TOTAL HOURS = 744 NUMBER OF GOOD HOURS = 726 NUMBER OF MISSING HOURS = 18 DATA CAPTURE = 97.58 (PERCENT)

NITROGEN OXIDES PPM		DATE (DAY,HOUR)				DATE (DAY,HOUR)	
MONTHLY AVERAGE	0.001						
-- 1HR AVERAGE --				-- 8HR RUNNING AVERAGE --			
HIGHEST AVERAGE	0.031	28	14	HIGHEST AVERAGE	0.014	26	12
2ND HIGHEST AVG.	0.027	26	12	2ND HIGHEST AVG.	0.013	26	13
-- 3HR RUNNING AVERAGE --				-- 24HR RUNNING AVERAGE --			
HIGHEST AVERAGE	0.019	28	14	HIGHEST AVERAGE	0.005	26	22
2ND HIGHEST AVG.	0.019	28	15	2ND HIGHEST AVG.	0.005	26	16

Wainwright Near-Term Air Quality Monitoring Program - Wainwright, Alaska
OCTOBER 2009

NITROGEN DIOXIDE - PPM

HOURS (LST)

HR-BEG	00	01	02	03	04	05	06	07	08	09	10	11	12	13	14	15	16	17	18	19	20	21	22	23			
HR-END	01	02	03	04	05	06	07	08	09	10	11	12	13	14	15	16	17	18	19	20	21	22	23	24			
DAY																									AVG/	MAX/	MIN
1	0.000	0.000	0.000	0.000	0.000	0.000	0.000	0.000						0.000	0.000	0.000	0.000	0.000	0.000	0.000	0.000	0.000	0.000	0.000	0.000	0.000	0.000
2	0.000	0.000		0.000	0.000	0.000	0.000	0.000	0.000	0.000	0.000	0.000	0.000	0.000	0.000	0.000	0.001	0.000	0.000	0.000	0.000	0.000	0.000	0.000	0.000	0.001	0.000
3	0.000	0.000	0.000	0.000	0.000	0.000	0.000	0.000	0.000	0.000	0.000	0.000	0.000	0.000	0.000	0.000	0.000	0.000	0.000	0.000	0.000	0.000	0.000	0.000	0.000	0.000	0.000
4	0.000	0.000	0.000	0.000	0.000	0.000	0.000	0.000	0.000	0.000	0.000	0.000	0.000	0.000	0.000	0.000	0.000	0.000	0.000	0.000	0.000	0.000	0.000	0.000	0.000	0.000	0.000
5	0.000	0.000	0.000	0.000	0.000	0.000	0.000		0.000	0.000	0.001	0.000	0.001	0.001	0.000	0.000	0.000	0.000	0.000	0.000	0.000	0.000	0.000	0.000	0.000	0.001	0.000
6	0.000	0.000	0.000	0.000	0.000	0.000	0.000	0.000	0.007	0.000	0.000	0.000	0.000	0.001	0.000	0.000	0.000	0.000	0.000	0.000	0.000	0.000	0.000	0.000	0.000	0.007	0.000
7	0.000	0.000	0.000	0.000	0.000	0.000	0.000	0.000	0.001	0.000	0.000	0.000	0.000	0.000	0.000	0.000	0.000	0.000	0.000	0.000	0.000	0.000	0.000	0.000	0.000	0.001	0.000
8	0.000	0.000	0.000	0.000	0.000	0.000	0.000	0.000	0.000	0.000	0.000	0.000	0.001	0.001	0.001	0.001	0.001	0.001	0.000	0.001	0.000	0.000	0.000	0.000	0.000	0.001	0.000
9	0.000	0.000		0.000	0.000	0.000	0.000	0.000	0.000	0.000	0.000	0.000	0.000	0.000	0.000	0.000	0.000	0.000	0.000	0.000	0.000	0.000	0.001	0.001	0.000	0.001	0.000
10	0.001	0.001	0.000	0.000	0.000	0.000	0.000	0.001	0.000	0.000	0.000	0.000	0.000	0.001	0.000	0.000	0.000	0.000	0.000	0.000	0.000	0.000	0.000	0.000	0.000	0.001	0.000
11	0.000	0.000	0.000	0.000	0.000	0.000	0.000	0.000	0.000	0.000	0.000	0.000	0.001	0.000	0.000	0.000	0.000	0.000	0.000	0.000	0.000	0.000	0.000	0.000	0.000	0.001	0.000
12	0.000	0.000	0.000	0.000	0.000	0.000	0.000	0.001	0.001	0.000	0.000	0.000	0.000	0.001	0.001	0.000	0.000	0.001	0.001	0.000	0.002	0.001	0.001	0.000	0.000	0.002	0.000
13	0.000	0.000	0.000	0.000	0.000	0.000	0.000			0.001	0.000	0.000	0.000	0.000	0.002	0.000	0.000	0.000	0.000	0.000	0.000	0.000	0.000	0.000	0.000	0.002	0.000
14	0.000	0.000	0.000	0.000	0.000	0.000	0.000	0.000	0.000	0.000	0.000	0.000	0.000	0.000	0.000	0.000	0.000	0.000	0.000	0.000	0.000	0.000	0.000	0.000	0.000	0.000	0.000
15	0.000	0.000	0.000	0.000	0.000	0.001	0.000	0.000	0.000	0.001	0.000	0.000	0.000	0.000	0.000	0.000	0.000	0.001	0.000	0.000	0.000	0.000	0.000	0.000	0.000	0.001	0.000
16	0.000	0.000		0.000	0.000	0.000	0.000	0.000	0.000	0.000	0.000	0.000	0.001	0.000	0.000	0.000	0.000	0.000	0.000	0.000	0.000	0.000	0.001	0.000	0.000	0.001	0.000
17	0.000	0.000	0.000	0.000	0.000	0.000	0.000	0.000	0.000	0.000	0.000	0.000	0.000	0.000	0.000	0.000	0.000	0.000	0.000	0.000	0.000	0.001	0.000	0.000	0.000	0.001	0.000
18	0.000	0.000	0.000	0.000	0.000	0.000	0.000	0.000	0.000	0.000	0.000	0.000	0.000	0.000	0.001	0.001	0.000	0.000	0.000	0.000	0.001	0.001	0.000	0.000	0.000	0.001	0.000
19	0.000	0.000	0.000	0.000	0.000	0.000	0.000	0.000	0.000	0.000	0.000	0.000	0.001	0.000	0.000	0.000	0.000	0.000	0.000	0.000	0.000	0.000	0.000	0.000	0.000	0.001	0.000
20	0.000	0.000	0.000	0.000	0.000	0.000		0.000	0.003	0.006	0.002	0.000	0.000	0.000	0.000	0.000	0.000	0.001	0.000	0.000	0.000	0.000	0.000	0.000	0.001	0.006	0.000
21	0.000	0.000	0.000	0.000	0.000	0.000	0.000	0.001	0.003	0.000	0.001	0.000	0.001	0.000	0.000	0.001	0.000	0.000	0.000	0.000	0.000	0.000	0.000	0.000	0.000	0.003	0.000
22	0.000	0.000	0.000	0.000	0.000	0.000	0.000	0.001	0.000	0.004	0.002	0.000	0.003	0.002	0.000	0.000	0.000	0.000	0.000	0.000	0.000	0.000	0.000	0.000	0.001	0.004	0.000
23	0.000	0.000		0.000	0.000	0.000	0.000	0.000	0.002	0.001	0.000	0.000	0.001	0.001	0.000	0.001	0.000	0.001	0.000	0.000	0.000	0.000	0.000	0.000	0.000	0.002	0.000
24	0.000	0.000	0.000	0.000	0.000	0.000	0.000	0.001	0.000	0.000	0.000	0.000	0.001	0.000	0.001	0.001	0.001	0.002	0.001	0.001	0.001	0.001	0.001	0.001	0.001	0.002	0.000
25	0.001	0.001	0.001	0.001	0.000	0.000	0.000	0.001	0.000	0.000	0.000	0.000	0.000	0.001	0.001	0.001	0.001	0.001	0.001	0.001	0.003	0.001	0.002	0.000	0.001	0.003	0.000
26	0.000	0.000	0.000	0.000	0.002	0.010	0.004	0.007			0.007	0.010	0.001	0.003	0.001	0.001	0.000	0.001	0.000	0.003	0.003	0.004	0.001	0.000	0.003	0.010	0.000
27	0.000	0.000	0.000	0.000	0.000	0.000	0.000	0.001	0.002	0.002	0.001	0.001	0.001	0.001	0.000	0.000	0.000	0.000	0.000	0.001	0.001	0.001	0.001	0.001	0.001	0.002	0.000
28	0.001	0.002	0.000	0.001	0.000	0.003	0.003	0.002			0.000	0.006	0.006	0.017	0.007	0.001	0.001	0.002	0.001	0.000	0.000	0.000	0.000	0.000	0.002	0.017	0.000
29	0.000	0.000	0.000	0.000	0.000	0.000	0.000	0.000	0.000	0.000	0.000	0.000	0.000	0.001	0.000	0.000	0.000	0.000	0.000	0.000	0.000	0.000	0.000	0.000	0.000	0.001	0.000
30	0.000	0.000		0.000	0.000	0.000	0.000	0.000	0.000	0.000	0.000	0.000	0.001	0.000	0.000	0.000	0.000	0.000	0.001	0.000	0.000	0.000	0.000	0.000	0.000	0.001	0.000
31	0.000	0.000	0.000	0.000	0.000	0.000	0.000	0.000	0.000	0.000	0.000	0.000	0.000	0.000	0.000	0.000	0.000	0.000	0.000	0.000	0.000	0.000	0.000	0.000	0.000	0.000	0.000
AVG	0.000	0.000	0.000	0.000	0.000	0.000	0.000	0.001	0.001	0.001	0.000	0.001	0.001	0.001	0.000	0.000	0.000	0.000	0.000	0.000	0.000	0.000	0.000	0.000	0.000		
MAX	0.001	0.002	0.001	0.001	0.002	0.010	0.004	0.007	0.007	0.006	0.007	0.010	0.006	0.017	0.007	0.001	0.001	0.002	0.001	0.003	0.003	0.004	0.002	0.001		0.017	
MIN	0.000	0.000	0.000	0.000	0.000	0.000	0.000	0.000	0.000	0.000	0.000	0.000	0.000	0.000	0.000	0.000	0.000	0.000	0.000	0.000	0.000	0.000	0.000	0.000			0.000

TOTAL HOURS = 744 NUMBER OF GOOD HOURS = 726 NUMBER OF MISSING HOURS = 18 DATA CAPTURE = 97.58 (PERCENT)

NITROGEN DIOXIDE PPM		DATE (DAY,HOUR)				DATE (DAY,HOUR)	
MONTHLY AVERAGE	0.000						
-- 1HR AVERAGE --				-- 8HR RUNNING AVERAGE --			
HIGHEST AVERAGE	0.017	28	14	HIGHEST AVERAGE	0.007	26	12
2ND HIGHEST AVG.	0.010	26	6	2ND HIGHEST AVG.	0.007	26	13
-- 3HR RUNNING AVERAGE --				-- 24HR RUNNING AVERAGE --			
HIGHEST AVERAGE	0.010	28	15	HIGHEST AVERAGE	0.003	26	22
2ND HIGHEST AVG.	0.010	28	14	2ND HIGHEST AVG.	0.003	28	19

Wainwright Near-Term Air Quality Monitoring Program - Wainwright, Alaska
OCTOBER 2009

NITRIC OXIDE - PPM

HOURS (LST)

HR-BEG	00	01	02	03	04	05	06	07	08	09	10	11	12	13	14	15	16	17	18	19	20	21	22	23			
HR-END	01	02	03	04	05	06	07	08	09	10	11	12	13	14	15	16	17	18	19	20	21	22	23	24			
DAY																									AVG/	MAX/	MIN
1	0.000	0.000	0.000	0.000	0.000	0.000	0.000	0.000						0.001	0.000	0.001	0.000	0.001	0.000	0.000	0.000	0.000	0.000	0.000	0.000	0.001	0.000
2	0.000	0.000		0.000	0.000	0.000	0.000	0.000	0.000	0.000	0.001	0.000	0.000	0.000	0.000	0.000	0.000	0.000	0.000	0.000	0.000	0.000	0.000	0.000	0.000	0.001	0.000
3	0.000	0.000	0.000	0.000	0.000	0.000	0.000	0.000	0.000	0.000	0.000	0.000	0.000	0.000	0.000	0.001	0.001	0.001	0.000	0.000	0.000	0.000	0.000	0.000	0.000	0.001	0.000
4	0.000	0.000	0.000	0.000	0.000	0.000	0.000	0.000	0.000	0.000	0.000	0.000	0.000	0.000	0.000	0.000	0.000	0.000	0.000	0.000	0.001	0.000	0.000	0.000	0.000	0.001	0.000
5	0.000	0.000	0.000	0.000	0.000	0.000	0.000		0.000	0.001	0.001	0.000	0.001	0.002	0.000	0.001	0.000	0.001	0.000	0.000	0.000	0.000	0.000	0.000	0.000	0.002	0.000
6	0.000	0.000	0.000	0.000	0.000	0.000	0.000	0.001	0.007	0.001	0.000	0.000	0.001	0.001	0.000	0.001	0.000	0.000	0.000	0.000	0.000	0.001	0.000	0.001	0.001	0.007	0.000
7	0.001	0.000	0.000	0.000	0.000	0.000	0.000	0.000	0.001	0.001	0.001	0.000	0.001	0.000	0.000	0.001	0.001	0.000	0.000	0.000	0.000	0.000	0.000	0.000	0.000	0.001	0.000
8	0.000	0.000	0.000	0.000	0.000	0.000	0.000	0.001	0.001	0.000	0.001	0.001	0.001	0.000	0.000	0.001	0.000	0.001	0.000	0.001	0.001	0.001	0.000	0.000	0.000	0.001	0.000
9	0.000	0.000		0.000	0.000	0.000	0.000	0.001	0.000	0.000	0.001	0.000	0.000	0.000	0.001	0.001	0.000	0.001	0.000	0.000	0.000	0.000	0.001	0.000	0.000	0.001	0.000
10	0.000	0.001	0.000	0.000	0.000	0.000	0.000	0.001	0.000	0.000	0.000	0.000	0.000	0.000	0.000	0.000	0.000	0.001	0.000	0.000	0.000	0.000	0.000	0.000	0.000	0.001	0.000
11	0.000	0.000	0.000	0.000	0.000	0.000	0.000	0.000	0.000	0.000	0.000	0.000	0.001	0.000	0.000	0.000	0.000	0.000	0.000	0.000	0.000	0.000	0.000	0.000	0.000	0.001	0.000
12	0.001	0.001	0.001	0.001	0.000	0.000	0.000	0.001	0.001	0.002	0.002	0.000	0.000	0.002	0.000	0.000	0.001	0.001	0.001	0.000	0.003	0.003	0.002	0.000	0.001	0.003	0.000
13	0.000	0.001	0.000	0.000	0.000	0.000	0.000			0.001	0.002	0.000	0.001	0.001	0.001	0.000	0.000	0.000	0.000	0.000	0.000	0.000	0.001	0.001	0.000	0.002	0.000
14	0.000	0.001	0.000	0.000	0.001	0.000	0.000	0.000	0.000	0.000	0.000	0.000	0.000	0.000	0.000	0.000	0.001	0.001	0.000	0.000	0.000	0.000	0.000	0.000	0.000	0.001	0.000
15	0.001	0.000	0.001	0.001	0.002	0.002	0.001	0.001	0.001	0.002	0.002	0.000	0.001	0.000	0.000	0.001	0.001	0.001	0.000	0.000	0.000	0.000	0.000	0.001	0.001	0.002	0.000
16	0.000	0.001		0.000	0.000	0.000	0.000	0.000	0.000	0.000	0.000	0.000	0.000	0.000	0.000	0.000	0.000	0.000	0.000	0.000	0.000	0.000	0.000	0.000	0.000	0.001	0.000
17	0.000	0.000	0.000	0.000	0.000	0.000	0.000	0.000	0.000	0.000	0.000	0.000	0.000	0.000	0.000	0.000	0.000	0.000	0.000	0.000	0.000	0.001	0.001	0.000	0.000	0.001	0.000
18	0.000	0.000	0.000	0.000	0.001	0.001	0.001	0.001	0.001	0.000	0.001	0.000	0.001	0.001	0.001	0.001	0.001	0.000	0.000	0.000	0.002	0.001	0.000	0.000	0.001	0.002	0.000
19	0.000	0.000	0.000	0.000	0.000	0.000	0.000	0.000	0.001	0.000	0.000	0.000	0.000	0.000	0.000	0.000	0.001	0.000	0.000	0.000	0.000	0.000	0.000	0.000	0.000	0.001	0.000
20	0.000	0.000	0.000	0.000	0.000	0.000		0.001	0.002	0.004	0.002	0.000	0.001	0.001	0.001	0.000	0.000	0.001	0.000	0.000	0.000	0.000	0.000	0.000	0.001	0.004	0.000
21	0.000	0.000	0.000	0.000	0.000	0.000	0.000	0.000	0.001	0.001	0.000	0.000	0.000	0.000	0.000	0.000	0.000	0.000	0.000	0.000	0.000	0.000	0.000	0.000	0.000	0.001	0.000
22	0.000	0.000	0.000	0.000	0.000	0.000	0.000	0.001	0.001	0.004	0.010	0.000	0.001	0.003	0.000	0.000	0.000	0.000	0.000	0.000	0.000	0.000	0.000	0.000	0.001	0.010	0.000
23	0.000	0.000		0.000	0.000	0.000	0.000	0.000	0.003	0.001	0.000	0.000	0.003	0.003	0.000	0.001	0.000	0.000	0.000	0.000	0.000	0.000	0.000	0.000	0.000	0.003	0.000
24	0.000	0.000	0.000	0.000	0.000	0.000	0.000	0.000	0.001	0.000	0.000	0.002	0.000	0.000	0.000	0.001	0.000	0.001	0.000	0.000	0.000	0.001	0.000	0.000	0.000	0.002	0.000
25	0.000	0.000	0.000	0.000	0.000	0.000	0.000	0.000	0.001	0.000	0.001	0.000	0.000	0.000	0.001	0.001	0.000	0.000	0.001	0.002	0.007	0.000	0.001	0.000	0.001	0.007	0.000
26	0.000	0.000	0.000	0.000	0.002	0.009	0.003	0.005			0.006	0.018	0.001	0.007	0.001	0.001	0.000	0.001	0.000	0.002	0.002	0.003	0.000	0.000	0.003	0.018	0.000
27	0.000	0.000	0.000	0.000	0.000	0.000	0.000	0.000	0.002	0.001	0.000	0.000	0.000	0.000	0.000	0.000	0.000	0.000	0.001	0.001	0.001	0.001	0.001	0.001	0.000	0.002	0.000
28	0.001	0.000	0.000	0.000	0.000	0.001	0.001	0.001			0.001	0.005	0.011	0.021	0.005	0.000	0.000	0.001	0.001	0.000	0.000	0.000	0.000	0.000	0.002	0.021	0.000
29	0.000	0.001	0.000	0.000	0.000	0.001	0.000	0.001	0.000	0.000	0.000	0.000	0.000	0.001	0.001	0.001	0.001	0.001	0.001	0.000	0.001	0.001	0.001	0.000	0.001	0.001	0.000
30	0.000	0.000		0.000	0.000	0.000	0.001	0.001	0.001	0.000	0.000	0.000	0.001	0.002	0.001	0.000	0.000	0.000	0.001	0.000	0.000	0.000	0.000	0.000	0.000	0.002	0.000
31	0.000	0.000	0.000	0.000	0.000	0.000	0.000	0.000	0.001	0.000	0.000	0.000	0.000	0.000	0.000	0.000	0.000	0.000	0.000	0.000	0.000	0.000	0.000	0.000	0.000	0.001	0.000
AVG	0.000	0.000	0.000	0.000	0.000	0.000	0.000	0.001	0.001	0.001	0.001	0.001	0.001	0.001	0.000	0.000	0.000	0.000	0.000	0.000	0.001	0.000	0.000	0.000	0.000		
MAX	0.001	0.001	0.001	0.001	0.002	0.009	0.003	0.005	0.007	0.004	0.010	0.018	0.011	0.021	0.005	0.001	0.001	0.001	0.001	0.002	0.007	0.003	0.002	0.001		0.021	
MIN	0.000	0.000	0.000	0.000	0.000	0.000	0.000	0.000	0.000	0.000	0.000	0.000	0.000	0.000	0.000	0.000	0.000	0.000	0.000	0.000	0.000	0.000	0.000	0.000			0.000

TOTAL HOURS = 744 NUMBER OF GOOD HOURS = 726 NUMBER OF MISSING HOURS = 18 DATA CAPTURE = 97.58 (PERCENT)

NITRIC OXIDE PPM		DATE (DAY,HOUR)				DATE (DAY,HOUR)	
MONTHLY AVERAGE	0.000						
-- 1HR AVERAGE --				-- 8HR RUNNING AVERAGE --			
HIGHEST AVERAGE	0.021	28	14	HIGHEST AVERAGE	0.007	28	15
2ND HIGHEST AVG.	0.018	26	12	2ND HIGHEST AVG.	0.007	28	16
-- 3HR RUNNING AVERAGE --				-- 24HR RUNNING AVERAGE --			
HIGHEST AVERAGE	0.012	28	14	HIGHEST AVERAGE	0.003	26	18
2ND HIGHEST AVG.	0.012	28	15	2ND HIGHEST AVG.	0.003	26	14

Wainwright Near-Term Air Quality Monitoring Program - Wainwright, Alaska
OCTOBER 2009

SULFUR DIOXIDE - PPM

HOURS (LST)

HR-BEG	00	01	02	03	04	05	06	07	08	09	10	11	12	13	14	15	16	17	18	19	20	21	22	23			
HR-END	01	02	03	04	05	06	07	08	09	10	11	12	13	14	15	16	17	18	19	20	21	22	23	24			
DAY																									AVG/	MAX/	MIN
1	0.000	0.000	0.000	0.000	0.000	0.000	0.000	0.000						0.001	0.001	0.000	0.000	0.000	0.000	0.000	0.000	0.000	0.000	0.000	0.000	0.001	0.000
2	0.000	0.000		0.000	0.000	0.000	0.000	0.000	0.000	0.000	0.000	0.000	0.000	0.000	0.000	0.000	0.000	0.000	0.000	0.000	0.000	0.000	0.000	0.000	0.000	0.000	0.000
3	0.000	0.000	0.000	0.000	0.000	0.000	0.000	0.000	0.000	0.000	0.000	0.000	0.000	0.000	0.000	0.000	0.000	0.000	0.000	0.000	0.000	0.000	0.000	0.000	0.000	0.000	0.000
4	0.000	0.000	0.000	0.000	0.000	0.000	0.000	0.000	0.000	0.000	0.000	0.000	0.000	0.000	0.000	0.000	0.000	0.000	0.000	0.000	0.000	0.000	0.000	0.000	0.000	0.000	0.000
5	0.000	0.000	0.000	0.000	0.000	0.000	0.000		0.000	0.001	0.001	0.000	0.000	0.000	0.000	0.000	0.000	0.000	0.000	0.000	0.000	0.000	0.001	0.000	0.000	0.001	0.000
6	0.000	0.000	0.000	0.000	0.000	0.000	0.000	0.000	0.000	0.000	0.000	0.000	0.000	0.000	0.000	0.000	0.000	0.000	0.000	0.000	0.000	0.000	0.000	0.000	0.000	0.000	0.000
7	0.000	0.000	0.000	0.000	0.000	0.000	0.000	0.000	0.000	0.000	0.000	0.000	0.000	0.000	0.000	0.000	0.000	0.000	0.000	0.000	0.000	0.000	0.000	0.000	0.000	0.000	0.000
8	0.000	0.000	0.000	0.000	0.000	0.000	0.000	0.000	0.000	0.000	0.000	0.000	0.000	0.000	0.000	0.000	0.000	0.000	0.000	0.001	0.000	0.000	0.000	0.000	0.000	0.001	0.000
9	0.000	0.000		0.000	0.001	0.001	0.001	0.000	0.000	0.000	0.000	0.000	0.000	0.001	0.000	0.000	0.000	0.000	0.000	0.000	0.000	0.000	0.001	0.000	0.000	0.001	0.000
10	0.000	0.001	0.000	0.000	0.000	0.000	0.000	0.000	0.000	0.000	0.000	0.000	0.000	0.000	0.000	0.000	0.000	0.000	0.000	0.000	0.000	0.000	0.000	0.000	0.000	0.001	0.000
11	0.000	0.000	0.000	0.000	0.000	0.000	0.000	0.000	0.000	0.000	0.000	0.000	0.000	0.000	0.000	0.000	0.000	0.000	0.000	0.000	0.000	0.000	0.000	0.000	0.000	0.000	0.000
12	0.000	0.001	0.000	0.000	0.000	0.000	0.000	0.000	0.000	0.000	0.000	0.000	0.000	0.000	0.000	0.000	0.001	0.001	0.001	0.000	0.001	0.001	0.001	0.000	0.000	0.001	0.000
13	0.000	0.000	0.000	0.000	0.000	0.000	0.000			0.000	0.001	0.000	0.001	0.001	0.001	0.000	0.000	0.000	0.000	0.000	0.000	0.000	0.000	0.000	0.000	0.001	0.000
14	0.000	0.001	0.000	0.000	0.000	0.000	0.000	0.000	0.000	0.000	0.000	0.000	0.000	0.000	0.000	0.000	0.001	0.001	0.000	0.000	0.000	0.000	0.000	0.000	0.000	0.001	0.000
15	0.001	0.000	0.000	0.001	0.001	0.001	0.001	0.001	0.001	0.001	0.001	0.001	0.001	0.001	0.001	0.001	0.001	0.001	0.001	0.000	0.000	0.000	0.000	0.001	0.001	0.001	0.000
16	0.000	0.001		0.000	0.001	0.001	0.000	0.000	0.000	0.000	0.000	0.000	0.000	0.000	0.000	0.000	0.000	0.000	0.000	0.000	0.000	0.000	0.000	0.000	0.000	0.001	0.000
17	0.001	0.001	0.000	0.001	0.001	0.000	0.001	0.001	0.000	0.001	0.001	0.000	0.000	0.001	0.000	0.000	0.001	0.000	0.000	0.000	0.000	0.001	0.001	0.001	0.001	0.001	0.000
18	0.001	0.001	0.000	0.001	0.001	0.001	0.001	0.001	0.001	0.001	0.001	0.001	0.001	0.001	0.001	0.001	0.000	0.000	0.000	0.000	0.001	0.001	0.000	0.000	0.001	0.001	0.000
19	0.000	0.000	0.000	0.000	0.000	0.000	0.000	0.000	0.000	0.000	0.000	0.000	0.000	0.000	0.000	0.000	0.000	0.000	0.000	0.000	0.000	0.000	0.000	0.000	0.000	0.000	0.000
20	0.000	0.000	0.000	0.000	0.000	0.000		0.000	0.001	0.001	0.001	0.000	0.001	0.001	0.001	0.001	0.001	0.001	0.000	0.000	0.000	0.000	0.000	0.000	0.000	0.001	0.000
21	0.000	0.001	0.000	0.001	0.000	0.001	0.000	0.000	0.000	0.000	0.000	0.000	0.000	0.000	0.000	0.000	0.000	0.000	0.000	0.000	0.000	0.000	0.000	0.000	0.000	0.001	0.000
22	0.000	0.000	0.000	0.000	0.000	0.000	0.000	0.000	0.000	0.000	0.000	0.000	0.000	0.000	0.000	0.000	0.000	0.000	0.000	0.000	0.000	0.000	0.000	0.000	0.000	0.000	0.000
23	0.000	0.000		0.000	0.000	0.000	0.000	0.000	0.001	0.000	0.000	0.000	0.000	0.000	0.000	0.000	0.000	0.000	0.000	0.000	0.000	0.000	0.000	0.000	0.000	0.001	0.000
24	0.000	0.000	0.000	0.000	0.000	0.000	0.000	0.000	0.000	0.000	0.000	0.000	0.000	0.000	0.000	0.000	0.000	0.000	0.000	0.000	0.000	0.000	0.000	0.000	0.000	0.000	0.000
25	0.000	0.000	0.000	0.000	0.000	0.000	0.000	0.000	0.000	0.000	0.000	0.000	0.000	0.000	0.000	0.000	0.000	0.000	0.000	0.000	0.002	0.000	0.000	0.000	0.000	0.002	0.000
26	0.000	0.000	0.000	0.000	0.001	0.006	0.003	0.003			0.000	0.001	0.000	0.000	0.000	0.000	0.000	0.000	0.000	0.000	0.000	0.000	0.000	0.000	0.001	0.006	0.000
27	0.000	0.000	0.000	0.000	0.000	0.000	0.000	0.000	0.000	0.000	0.000	0.000	0.000	0.000	0.000	0.000	0.000	0.000	0.000	0.000	0.000	0.000	0.000	0.000	0.000	0.000	0.000
28	0.000	0.000	0.000	0.000	0.000	0.000	0.000	0.000			0.000	0.000	0.000	0.001	0.000	0.000	0.000	0.000	0.000	0.000	0.000	0.000	0.000	0.000	0.000	0.001	0.000
29	0.000	0.000	0.000	0.000	0.000	0.000	0.000	0.000	0.000	0.000	0.000	0.000	0.000	0.000	0.000	0.000	0.000	0.000	0.000	0.000	0.000	0.000	0.000	0.000	0.000	0.000	0.000
30	0.000	0.000		0.000	0.000	0.000	0.000	0.000	0.000	0.000	0.000	0.000	0.000	0.000	0.000	0.000	0.000	0.000	0.000	0.000	0.000	0.000	0.000	0.000	0.000	0.000	0.000
31	0.000	0.000	0.000	0.000	0.000	0.000	0.000	0.000	0.000	0.000	0.000	0.000	0.000	0.000	0.000	0.000	0.000	0.000	0.000	0.000	0.000	0.000	0.000	0.000	0.000	0.000	0.000
AVG	0.000	0.000	0.000	0.000	0.000	0.000	0.000	0.000	0.000	0.000	0.000	0.000	0.000	0.000	0.000	0.000	0.000	0.000	0.000	0.000	0.000	0.000	0.000	0.000	0.000		
MAX	0.001	0.001	0.000	0.001	0.001	0.006	0.003	0.003	0.001	0.001	0.001	0.001	0.001	0.001	0.001	0.001	0.001	0.001	0.001	0.001	0.002	0.001	0.001	0.001		0.006	
MIN	0.000	0.000	0.000	0.000	0.000	0.000	0.000	0.000	0.000	0.000	0.000	0.000	0.000	0.000	0.000	0.000	0.000	0.000	0.000	0.000	0.000	0.000	0.000	0.000			0.000

TOTAL HOURS = 744 NUMBER OF GOOD HOURS = 726 NUMBER OF MISSING HOURS = 18 DATA CAPTURE = 97.58 (PERCENT)

SULFUR DIOXIDE PPM		DATE (DAY,HOUR)				DATE (DAY,HOUR)		
MONTHLY AVERAGE	0.000							
-- 1HR AVERAGE --				-- 8HR RUNNING AVERAGE --				
HIGHEST AVERAGE	0.006	26	6	HIGHEST AVERAGE	0.002	26	12	
2ND HIGHEST AVG.	0.003	26	7	2ND HIGHEST AVG.	0.002	26	10	
-- 3HR RUNNING AVERAGE --				-- 24HR RUNNING AVERAGE --				
HIGHEST AVERAGE	0.004	26	8	HIGHEST AVERAGE	0.001	18	22	
2ND HIGHEST AVG.	0.003	26	7	2ND HIGHEST AVG.	0.001	18	21	

Wainwright Near-Term Air Quality Monitoring Program - Wainwright, Alaska
OCTOBER 2009

OZONE - PPM

HOURS (LST)

HR-BEG	00	01	02	03	04	05	06	07	08	09	10	11	12	13	14	15	16	17	18	19	20	21	22	23			
HR-END	01	02	03	04	05	06	07	08	09	10	11	12	13	14	15	16	17	18	19	20	21	22	23	24			
DAY																									AVG/	MAX/	MIN
1	0.027	0.028	0.030	0.027	0.026	0.025	0.025	0.025						0.028	0.024	0.025	0.025	0.026	0.026	0.026	0.026	0.026	0.026	0.027	0.026	0.030	0.024
2	0.026	0.027		0.028	0.026	0.025	0.026	0.025	0.025	0.025	0.025	0.024	0.023	0.023	0.023	0.024	0.025	0.026	0.025	0.025	0.026	0.026	0.025	0.025	0.025	0.028	0.023
3	0.025	0.023	0.027	0.024	0.023	0.024	0.024	0.023	0.026	0.027	0.026	0.027	0.027	0.027	0.027	0.027	0.027	0.027	0.026	0.027	0.026	0.026	0.026	0.026	0.026	0.027	0.023
4	0.026	0.026	0.028	0.024	0.025	0.025	0.026	0.026	0.026	0.026	0.026	0.026	0.026	0.026	0.026	0.025	0.025	0.024	0.024	0.025	0.025	0.025	0.025	0.025	0.025	0.028	0.024
5	0.025	0.025	0.027	0.024	0.024	0.024	0.024		0.028	0.027	0.026	0.026	0.026	0.025	0.025	0.024	0.025	0.026	0.027	0.025	0.028	0.027	0.026	0.024	0.026	0.028	0.024
6	0.024	0.024	0.027	0.023	0.023	0.025	0.025	0.025	0.024	0.026	0.026	0.026	0.025	0.027	0.028	0.028	0.028	0.027	0.025	0.025	0.026	0.025	0.024	0.023	0.025	0.028	0.023
7	0.023	0.025	0.029	0.026	0.027	0.027	0.029	0.027	0.026	0.026	0.027	0.027	0.026	0.028	0.029	0.029	0.029	0.029	0.029	0.029	0.029	0.027	0.027	0.027	0.027	0.029	0.023
8	0.027	0.028	0.031	0.027	0.029	0.027	0.027	0.028	0.028	0.027	0.026	0.026	0.026	0.025	0.026	0.027	0.026	0.026	0.027	0.026	0.026	0.025	0.026	0.025	0.027	0.031	0.025
9	0.025	0.025		0.025	0.026	0.024	0.024	0.024	0.023	0.023	0.022	0.021	0.019	0.018	0.018	0.018	0.018	0.018	0.017	0.015	0.015	0.016	0.016	0.016	0.020	0.026	0.015
10	0.016	0.015	0.017	0.015	0.018	0.016	0.015	0.014	0.015	0.015	0.017	0.020	0.021	0.023	0.023	0.023	0.023	0.024	0.025	0.024	0.022	0.021	0.020	0.020	0.019	0.025	0.014
11	0.020	0.019	0.023	0.019	0.022	0.019	0.019	0.019	0.020	0.020	0.021	0.021	0.021	0.021	0.020	0.019	0.019	0.018	0.016	0.015	0.014	0.012	0.010	0.009	0.018	0.023	0.009
12	0.009	0.011	0.013	0.011	0.013	0.014	0.015	0.016	0.016	0.015	0.016	0.016	0.016	0.015	0.015	0.015	0.015	0.015	0.016	0.016	0.015	0.016	0.015	0.018	0.015	0.018	0.009
13	0.017	0.016	0.017	0.013	0.016	0.014	0.014			0.015	0.014	0.014	0.015	0.016	0.015	0.014	0.014	0.015	0.014	0.015	0.016	0.017	0.018	0.019	0.015	0.019	0.013
14	0.019	0.019	0.023	0.019	0.019	0.019	0.019	0.018	0.021	0.021	0.020	0.021	0.021	0.020	0.019	0.021	0.021	0.022	0.022	0.022	0.022	0.021	0.020	0.021	0.020	0.023	0.018
15	0.022	0.021	0.025	0.020	0.022	0.020	0.020	0.021	0.020	0.020	0.021	0.022	0.022	0.023	0.023	0.022	0.023	0.024	0.025	0.024	0.023	0.023	0.025	0.026	0.022	0.026	0.020
16	0.026	0.027		0.028	0.024	0.025	0.024	0.024	0.027	0.028	0.028	0.028	0.027	0.027	0.028	0.028	0.027	0.028	0.028	0.031	0.032	0.033	0.032	0.032	0.028	0.033	0.024
17	0.030	0.029	0.031	0.028	0.028	0.029	0.027	0.027	0.026	0.025	0.025	0.025	0.025	0.026	0.026	0.027	0.027	0.027	0.028	0.028	0.027	0.026	0.025	0.025	0.027	0.031	0.025
18	0.027	0.028	0.030	0.024	0.024	0.023	0.022	0.021	0.021	0.022	0.024	0.024	0.024	0.024	0.025	0.025	0.024	0.023	0.022	0.021	0.020	0.023	0.022	0.021	0.024	0.030	0.020
19	0.022	0.022	0.026	0.025	0.027	0.031	0.034	0.035	0.034	0.033	0.032	0.031	0.030	0.029	0.029	0.028	0.027	0.026	0.025	0.026	0.026	0.028	0.028	0.029	0.028	0.035	0.022
20	0.029	0.029	0.033	0.029	0.029	0.029		0.031	0.027	0.023	0.026	0.026	0.025	0.026	0.026	0.026	0.026	0.025	0.026	0.026	0.026	0.026	0.027	0.028	0.027	0.033	0.023
21	0.029	0.030	0.034	0.034	0.034	0.034	0.035	0.033	0.032	0.033	0.035	0.035	0.034	0.034	0.034	0.034	0.033	0.032	0.031	0.031	0.032	0.032	0.032	0.031	0.033	0.035	0.029
22	0.031	0.031	0.035	0.031	0.031	0.030	0.029	0.029	0.029	0.029	0.027	0.029	0.029	0.029	0.029	0.028	0.029	0.028	0.027	0.027	0.028	0.028	0.029	0.029	0.029	0.035	0.027
23	0.030	0.033		0.035	0.034	0.034	0.034	0.033	0.032	0.032	0.032	0.032	0.031	0.028	0.030	0.030	0.031	0.031	0.031	0.031	0.031	0.030	0.030	0.029	0.031	0.035	0.028
24	0.027	0.027	0.029	0.026	0.026	0.025	0.025	0.025	0.025	0.025	0.024	0.024	0.024	0.024	0.023	0.023	0.022	0.022	0.022	0.021	0.021	0.022	0.022	0.022	0.024	0.029	0.021
25	0.021	0.022	0.025	0.022	0.022	0.022	0.022	0.022	0.022	0.023	0.023	0.022	0.021	0.021	0.020	0.019	0.019	0.019	0.019	0.019	0.017	0.020	0.020	0.021	0.021	0.025	0.017
26	0.021	0.020	0.024	0.020	0.021	0.016	0.019	0.017			0.016	0.012	0.019	0.018	0.018	0.018	0.020	0.022	0.024	0.023	0.024	0.023	0.024	0.024	0.020	0.024	0.012
27	0.027	0.030	0.033	0.031	0.032	0.032	0.033	0.034	0.033	0.033	0.034	0.034	0.034	0.034	0.034	0.034	0.033	0.032	0.034	0.034	0.034	0.034	0.034	0.033	0.033	0.034	0.027
28	0.029	0.027	0.030	0.027	0.029	0.026	0.025	0.026			0.025	0.022	0.026	0.023	0.025	0.034	0.034	0.032	0.030	0.032	0.032	0.032	0.032	0.032	0.029	0.034	0.022
29	0.031	0.032	0.034	0.031	0.032	0.032	0.031	0.031	0.032	0.032	0.031	0.030	0.029	0.028	0.029	0.029	0.028	0.028	0.028	0.028	0.028	0.028	0.028	0.029	0.030	0.034	0.028
30	0.029	0.029		0.031	0.029	0.030	0.030	0.030	0.030	0.030	0.029	0.029	0.029	0.028	0.028	0.028	0.028	0.028	0.028	0.028	0.028	0.028	0.029	0.028	0.029	0.031	0.028
31	0.028	0.029	0.032	0.028	0.029	0.029	0.030	0.030	0.030	0.031	0.031	0.031	0.031	0.031	0.031	0.031	0.031	0.031	0.031	0.030	0.029	0.029	0.031	0.031	0.030	0.032	0.028
AVG	0.025	0.025	0.027	0.025	0.025	0.025	0.025	0.025	0.026	0.025	0.025	0.025	0.025	0.025	0.025	0.025	0.025	0.025	0.025	0.025	0.025	0.025	0.025	0.025	0.025		
MAX	0.031	0.033	0.035	0.035	0.034	0.034	0.035	0.035	0.034	0.033	0.035	0.035	0.034	0.034	0.034	0.034	0.034	0.032	0.034	0.034	0.034	0.034	0.034	0.033		0.035	
MIN	0.009	0.011	0.013	0.011	0.013	0.014	0.014	0.014	0.015	0.015	0.014	0.012	0.015	0.015	0.015	0.014	0.014	0.015	0.014	0.015	0.014	0.012	0.010	0.009			0.009

TOTAL HOURS = 744 NUMBER OF GOOD HOURS = 726 NUMBER OF MISSING HOURS = 18 DATA CAPTURE = 97.58 (PERCENT)

OZONE PPM		DATE (DAY,HOUR)				DATE (DAY,HOUR)	
MONTHLY AVERAGE	0.025						
-- 1HR AVERAGE --				-- 8HR RUNNING AVERAGE --			
HIGHEST AVERAGE	0.035	19	8	HIGHEST AVERAGE	0.034	21	17
2ND HIGHEST AVG.	0.035	21	7	2ND HIGHEST AVG.	0.034	21	16
-- 3HR RUNNING AVERAGE --				-- 24HR RUNNING AVERAGE --			
HIGHEST AVERAGE	0.035	21	13	HIGHEST AVERAGE	0.033	28	1
2ND HIGHEST AVG.	0.034	19	9	2ND HIGHEST AVG.	0.033	22	3

Wainwright Near-Term Air Quality Monitoring Program - Wainwright, Alaska
OCTOBER 2009

CARBON MONOXIDE - PPM

HOURS (LST)

HR-BEG	00	01	02	03	04	05	06	07	08	09	10	11	12	13	14	15	16	17	18	19	20	21	22	23			
HR-END	01	02	03	04	05	06	07	08	09	10	11	12	13	14	15	16	17	18	19	20	21	22	23	24			
DAY																									AVG/	MAX/	MIN
1	0.049	0.072	0.059	0.063	0.085	0.096	0.129	0.112						0.066	0.076	0.074	0.071	0.076	0.080	0.083	0.092	0.097	0.106	0.101	0.084	0.129	0.049
2	0.111	0.117		0.111	0.115	0.114	0.112	0.115	0.131	0.144	0.157	0.163	0.156	0.137	0.129	0.134	0.137	0.107	0.117	0.144	0.148	0.203	0.185	0.179	0.138	0.203	0.107
3	0.157	0.155	0.139	0.151	0.153	0.155	0.168	0.151	0.158	0.099	0.081	0.080	0.081	0.066	0.055	0.080	0.075	0.119	0.070	0.084	0.089	0.089	0.091	0.065	0.109	0.168	0.055
4	0.057	0.063	0.049	0.048	0.042	0.033	0.029	0.037	0.047	0.048	0.049	0.045	0.053	0.044	0.044	0.047	0.038	0.034	0.024	0.005	0.060	0.020	0.002	0.000	0.038	0.063	0.000
5	0.010	0.038	0.026	0.027	0.028	0.057	0.079		0.063	0.487	0.101	0.063	0.043	0.036	0.043	0.138	0.075	0.025	0.015	0.000	0.014	0.028	0.056	0.026	0.064	0.487	0.000
6	0.027	0.021	0.058	0.015	0.011	0.019	0.049	0.046	0.085	0.049	0.077	0.069	0.074	0.045	0.033	0.052			0.033	0.079	0.082	0.045	0.030	0.170	0.053	0.170	0.011
7	0.071	0.053	0.016	0.022	0.013	0.019	0.022	0.026	0.023	0.028	0.031	0.023	0.028	0.027	0.027	0.030	0.048	0.016	0.009	0.043	0.045	0.061	0.021	0.001	0.029	0.071	0.001
8	0.006	0.032	0.016	0.023	0.010	0.009	0.040	0.048	0.040	0.021	0.034	0.029	0.067	0.059	0.066	0.058	0.054	0.041	0.036	0.031	0.035	0.078	0.066	0.067	0.040	0.078	0.006
9	0.057	0.040		0.048	0.051	0.049	0.043	0.044	0.049	0.039	0.037	0.037	0.041	0.030	0.029	0.018	0.136	0.211	0.245	0.230	0.210	0.233	0.296	0.271	0.106	0.296	0.018
10	0.345	0.283	0.224	0.237	0.289	0.303	0.302	0.292	0.293	0.294	0.309	0.312	0.331	0.348	0.327	0.329	0.325	0.318	0.319	0.327	0.328	0.328	0.328	0.337	0.310	0.348	0.224
11	0.317	0.063	0.038	0.038	0.053	0.043	0.046	0.040	0.041	0.047	0.042	0.051	0.048	0.044	0.037	0.035	0.018	0.013	0.020	0.025	0.029	0.030	0.022	0.029	0.049	0.317	0.013
12	0.064	0.042	0.022	0.030	0.038	0.035	0.035	0.044	0.045	0.037	0.014	0.019	0.025	0.047	0.033	0.045	0.060	0.136	0.135	0.088	0.098	0.100	0.126	0.099	0.059	0.136	0.014
13	0.078	0.092	0.082	0.088	0.086	0.102	0.089			0.096	0.105	0.099	0.086	0.055	0.113	0.047	0.056		0.061	0.058	0.061	0.067	0.071	0.071	0.079	0.113	0.047
14	0.083	0.097	0.072	0.097	0.092	0.089	0.095	0.085	0.075	0.079	0.068	0.067	0.080	0.088	0.089	0.127	0.085	0.074	0.053	0.032	0.034	0.032	0.036	0.030	0.073	0.127	0.030
15	0.029	0.032	0.047	0.054	0.054	0.061	0.101	0.053	0.107	0.127	0.060	0.041	0.056	0.069	0.042	0.032	0.018	0.020	0.021	0.057	0.047	0.030	0.023	0.064	0.052	0.127	0.018
16	0.057	0.025		0.000	0.000	0.023	0.040	0.000	0.006	0.010	0.014	0.051	0.039	0.044	0.054	0.030	0.024	0.060	0.123	0.130	0.130	0.126	0.132	0.113	0.054	0.132	0.000
17	0.115	0.111	0.085	0.068	0.058	0.071	0.073	0.034	0.020	0.042	0.025	0.015	0.008	0.007	0.038	0.068	0.090	0.083	0.080	0.069	0.060	0.055	0.049	0.060	0.058	0.115	0.007
18	0.042	0.078	0.065	0.048	0.052	0.046	0.057	0.045	0.056	0.045	0.072	0.062	0.087	0.070	0.102	0.085	0.090	0.136	0.178	0.167	0.189	0.177	0.197	0.224	0.099	0.224	0.042
19	0.197	0.212	0.201	0.197	0.189	0.187	0.186	0.177	0.180	0.183	0.185	0.188	0.211	0.201	0.225	0.218	0.237	0.203	0.233	0.220	0.231	0.228	0.221	0.214	0.205	0.237	0.177
20	0.214	0.223	0.200	0.209	0.216	0.244		0.215	0.289	0.288	0.274	0.231	0.267	0.250	0.294	0.276	0.250	0.234	0.228	0.235					0.244	0.294	0.200
21																0.261	0.238	0.244	0.250	0.269	0.269	0.250	0.204	0.188	0.241	0.269	0.188
22	0.198	0.217	0.198	0.183	0.152	0.162	0.196	0.242	0.229	0.237	0.222	0.059	0.028	0.029	0.035	0.090	0.096	0.100	0.109	0.096	0.089	0.096	0.062	0.055	0.133	0.242	0.028
23	0.056	0.054										0.142	0.117	0.110	0.130	0.148	0.167	0.138	0.146	0.127	0.110	0.110	0.110	0.113	0.119	0.167	0.054
24	0.106	0.122	0.098	0.104	0.115	0.117	0.105	0.110	0.126	0.122	0.111	0.099	0.139	0.099	0.112	0.160	0.101	0.107	0.109	0.102	0.086	0.136	0.137	0.094	0.113	0.160	0.086
25	0.086	0.101	0.082	0.080	0.076	0.073	0.075	0.075	0.077	0.075	0.085	0.072	0.086	0.070	0.122	0.087	0.074	0.065	0.121	0.108	0.210	0.103	0.094	0.090	0.091	0.210	0.065
26	0.093	0.109	0.095	0.095	0.183	0.135	0.122	0.177			0.115	0.126	0.104	0.096	0.091	0.088	0.099	0.097	0.099	0.098	0.111	0.118	0.174	0.092	0.114	0.183	0.088
27	0.088	0.086	0.062	0.068			0.065	0.096	0.103	0.100	0.102	0.102	0.119	0.110	0.130	0.141	0.135	0.111	0.045	0.038	0.033	0.035	0.026	0.025	0.083	0.141	0.025
28	0.043	0.039	0.033	0.026	0.028	0.028	0.036	0.025			0.091	0.156	0.178	0.270	0.252	0.097	0.116	0.235	0.197	0.061	0.062	0.084	0.093	0.068	0.101	0.270	0.025
29	0.071	0.078	0.060	0.062	0.065	0.062	0.064	0.063	0.068	0.076	0.078	0.077	0.086	0.085	0.073	0.063	0.067	0.044	0.031	0.036	0.027	0.027	0.029	0.010	0.058	0.086	0.010
30	0.025	0.030		0.035	0.044		0.044		0.047	0.043	0.050	0.046	0.054	0.058	0.062	0.085	0.094	0.092	0.190	0.099	0.097	0.106	0.101	0.110	0.072	0.190	0.025
31	0.114	0.125	0.123	0.133	0.132	0.122	0.105	0.116	0.126	0.139	0.128	0.122	0.127	0.124	0.122	0.122	0.113	0.116	0.119	0.119	0.122	0.079	0.000	0.000	0.110	0.139	0.000
AVG	0.099	0.094	0.086	0.081	0.087	0.091	0.090	0.095	0.099	0.114	0.097	0.091	0.097	0.093	0.099	0.105	0.106	0.112	0.113	0.105	0.107	0.106	0.103	0.099	0.099		
MAX	0.345	0.283	0.224	0.237	0.289	0.303	0.302	0.292	0.293	0.487	0.309	0.312	0.331	0.348	0.327	0.329	0.325	0.318	0.319	0.327	0.328	0.328	0.328	0.337		0.487	
MIN	0.006	0.021	0.016	0.000	0.000	0.009	0.022	0.000	0.006	0.010	0.014	0.015	0.008	0.007	0.027	0.018	0.018	0.013	0.009	0.000	0.014	0.020	0.000	0.000			0.000

TOTAL HOURS = 744 NUMBER OF GOOD HOURS = 692 NUMBER OF MISSING HOURS = 52 DATA CAPTURE = 93.01 (PERCENT)

CARBON MONOXIDE PPM		DATE (DAY,HOUR)				DATE (DAY,HOUR)	
MONTHLY AVERAGE	0.099						
-- 1HR AVERAGE --				-- 8HR RUNNING AVERAGE --			
HIGHEST AVERAGE	0.487	5	10	HIGHEST AVERAGE	0.328	10	20
2ND HIGHEST AVG.	0.348	10	14	2ND HIGHEST AVG.	0.328	10	21
-- 3HR RUNNING AVERAGE --				-- 24HR RUNNING AVERAGE --			
HIGHEST AVERAGE	0.335	10	15	HIGHEST AVERAGE	0.310	10	24
2ND HIGHEST AVG.	0.335	10	16	2ND HIGHEST AVG.	0.308	11	1

Wainwright Near-Term Air Quality Monitoring Program - Wainwright, Alaska
OCTOBER 2009

PM-10 - µg/m3

HOURS (LST)

HR-BEG	00	01	02	03	04	05	06	07	08	09	10	11	12	13	14	15	16	17	18	19	20	21	22	23			
HR-END	01	02	03	04	05	06	07	08	09	10	11	12	13	14	15	16	17	18	19	20	21	22	23	24			
DAY																									AVG/	MAX/	MIN
1	5.	2.	1.	2.	3.	2.	0.	1.	33.	17.	8.	10.	70.	20.	28.	45.	13.	13.	9.	6.	10.	9.	6.	6.	13.	70.	0.
2	4.	2.	3.	3.	2.	3.	3.	6.	16.	11.	35.	8.	101.	24.	39.	28.	70.	6.	9.	38.	19.	46.	20.	21.	22.	101.	2.
3	36.	3.	3.	5.	7.	5.	2.	16.	24.	42.	12.	23.	27.	13.	31.	72.	68.	33.	19.	27.	15.	13.	8.	4.	21.	72.	2.
4	5.	7.	5.	2.	3.	5.	4.	4.	4.	4.	6.	5.	6.	9.	8.	8.	7.	8.	12.	11.	9.	11.	11.	9.	7.	12.	2.
5	8.	6.	6.	3.	2.	2.	2.	7.	23.	21.	19.	8.	27.	32.	16.	39.	26.	28.	30.	48.	38.	37.	16.	11.	19.	48.	2.
6	9.	6.	5.	7.	9.	11.	11.	12.	89.	81.	116.	36.	324.	94.	109.	294.	72.	108.	50.	63.	79.	38.	8.	23.	69.	324.	5.
7	6.	4.	4.	6.	6.	10.	9.	26.	78.	42.	34.	28.	137.	119.	75.	85.	64.	109.	25.	52.	38.	61.	22.	14.	44.	137.	4.
8	41.	64.	50.	31.	20.	20.	17.	44.	122.	79.	80.	94.	74.	55.	69.	111.	119.	32.	33.	15.	20.	27.	12.	15.	52.	122.	12.
9	6.	6.	5.	5.	6.	5.	4.	3.	3.	4.	3.	2.	1.	3.	3.	3.	5.	4.	1.	2.	1.	-1.	1.	3.	3.	6.	-1.
10	0.	0.	4.	3.	1.	1.	2.	1.	1.	3.	5.	6.	6.	6.	3.	3.	5.	5.	7.	11.	22.	13.	16.	13.	6.	22.	0.
11	14.	19.	11.	17.	16.	14.	15.	16.	22.	22.	16.	16.	13.	13.	12.	11.	8.	4.	5.	6.	3.	6.	7.	6.	12.	22.	3.
12	5.	2.	1.	-1.	-2.	-1.	1.	3.	4.	4.	4.	3.	2.	3.	3.	4.	4.	5.	3.	0.	0.	2.	1.	0.	2.	5.	-2.
13	0.	2.	3.	0.	3.	6.	4.	4.	5.	4.	4.	3.	1.	3.	4.	3.	5.	6.	2.	-1.	1.	6.	6.	5.	3.	6.	-1.
14	2.	4.	4.	4.	7.	6.	4.	4.	5.	9.	7.	6.	8.	9.	8.	16.	7.	6.	6.	6.	5.	3.	2.	4.	6.	16.	2.
15	7.	15.	18.	7.	9.	9.	22.	12.	21.	16.	8.	6.	4.	16.	16.	13.	24.	15.	12.	8.	4.	5.	5.	22.	12.	24.	4.
16	8.	26.	26.	15.	14.	20.	20.	17.	19.	19.	16.	21.	21.	17.	17.	22.	21.	19.	20.	16.	23.	18.	19.	28.	19.	28.	8.
17	15.	14.	12.	7.	4.	4.	6.	4.	0.	4.	7.	16.	14.	10.	10.	12.	12.	13.	13.	18.	17.	23.	13.	12.	11.	23.	0.
18	11.	12.	17.	11.	8.	4.	5.	4.	1.	1.	2.	1.	4.	10.	12.	19.	7.	4.	1.	1.	0.	0.	3.	3.	6.	19.	0.
19	2.	1.	0.	1.	3.	-1.	1.	4.	5.	5.	4.	4.	2.	2.	3.	3.	4.	6.	6.	3.	-1.	2.	3.	0.	3.	6.	-1.
20	0.	1.	1.	3.	2.	-1.	-2.	2.	4.	4.	2.	4.	7.	6.	4.	4.	4.	4.	4.	4.	4.	4.	2.	0.	3.	7.	-2.
21	2.	2.	0.	3.	6.	5.	7.	9.	9.	10.	8.	6.	6.	4.	5.	8.	9.	8.	5.	8.	12.	13.	13.	6.	7.	13.	0.
22	6.	11.	11.	9.	8.	6.	6.	8.	10.	10.	9.	9.	7.	6.	10.	13.	12.	7.	3.	2.	1.	3.	5.	4.	7.	13.	1.
23	5.	6.	5.	2.	2.	5.	7.	7.	8.	8.	8.	7.	15.	11.	11.	13.	15.	10.	9.	11.	11.	12.	9.	6.	8.	15.	2.
24	8.	9.	6.	3.	6.	4.	1.	4.	4.	1.	1.	2.	0.	1.	4.	2.	1.	2.	1.	0.	0.	0.	4.	5.	3.	9.	0.
25	2.	1.	2.	2.	1.	1.	0.	-1.	1.	0.	-1.	-2.	-1.	0.	-2.	0.	3.	1.	2.	5.	2.	0.	1.	3.	1.	5.	-2.
26	2.	0.	2.	5.	6.	6.	3.	2.	4.	5.	5.	3.	2.	3.	3.	2.	1.	1.	1.	5.	10.	13.	11.	11.	4.	13.	0.
27	15.	16.	24.	23.	20.	27.	15.	23.	21.	22.	23.	22.	26.	30.	25.	31.	40.	24.	16.	12.	11.	10.	17.	10.	21.	40.	10.
28	10.	30.	16.	10.	18.	23.	22.	26.			2.	6.	17.	14.	12.	8.	3.	4.	5.	5.	5.	2.	0.	2.	11.	30.	0.
29	4.	6.	4.	1.	0.	2.	4.	4.	5.	3.	2.	-1.	1.	4.	2.	0.	1.	2.	0.	1.	2.	0.	-3.	-3.	2.	6.	-3.
30	1.	3.	2.	1.	3.	4.	3.	-1.	0.	2.	0.	-1.	-1.	2.	3.	1.	2.	2.	3.	3.	4.	6.	3.	-1.	2.	6.	-1.
31	-1.	2.	3.	3.	2.	0.	1.	2.	3.	4.	2.	2.	2.	2.	3.	1.	0.	1.	1.	1.	4.	4.	2.	2.	2.	4.	-1.
AVG	8.	9.	8.	6.	6.	7.	6.	9.	18.	15.	14.	11.	30.	17.	18.	28.	20.	16.	10.	12.	12.	12.	8.	8.	13.		
MAX	41.	64.	50.	31.	20.	27.	22.	44.	122.	81.	116.	94.	324.	119.	109.	294.	119.	109.	50.	63.	79.	61.	22.	28.		324.	
MIN	-1.	0.	0.	-1.	-2.	-1.	-2.	-1.	0.	0.	-1.	-2.	-1.	0.	-2.	0.	0.	1.	0.	-1.	-1.	-1.	-3.	-3.			-3.

TOTAL HOURS = 744 NUMBER OF GOOD HOURS = 742 NUMBER OF MISSING HOURS = 2 DATA CAPTURE = 99.73 (PERCENT)

PM-10 µg/m3		DATE (DAY,HOUR)				DATE (DAY,HOUR)	
MONTHLY AVERAGE	13.						
-- 1HR AVERAGE --				-- 8HR RUNNING AVERAGE --			
HIGHEST AVERAGE	324.	6	13	HIGHEST AVERAGE	144.	6	18
2ND HIGHEST AVG.	294.	6	16	2ND HIGHEST AVG.	143.	6	16
-- 3HR RUNNING AVERAGE --				-- 24HR RUNNING AVERAGE --			
HIGHEST AVERAGE	176.	6	15	HIGHEST AVERAGE	69.	7	8
2ND HIGHEST AVG.	166.	6	16	2ND HIGHEST AVG.	69.	6	24

Wainwright Near-Term Air Quality Monitoring Program - Wainwright, Alaska
OCTOBER 2009

PM-2.5 - µg/m3

HOURS (LST)

HR-BEG	00	01	02	03	04	05	06	07	08	09	10	11	12	13	14	15	16	17	18	19	20	21	22	23			
HR-END	01	02	03	04	05	06	07	08	09	10	11	12	13	14	15	16	17	18	19	20	21	22	23	24			
DAY																									AVG/	MAX/	MIN
1	-1.	0.	0.	-1.	-3.	-4.	-4.	-1.	3.	2.	1.	-1.	-2.	0.	-1.	-3.	-1.	-1.	-2.	1.	0.	-1.	-2.	0.	-1.	3.	-4.
2	-2.	1.	2.	-1.	0.	-2.	-1.	0.	-1.	0.	-1.	0.	1.	2.	2.	1.	1.	1.	0.	1.	4.	3.	2.	1.	1.	4.	-2.
3	1.	-1.	2.	4.	0.	-5.	-1.	1.	3.	3.	4.	8.	4.	4.	7.	9.	8.	3.	1.	3.	3.	1.	0.	3.	3.	9.	-5.
4	3.	1.	2.	1.	1.	0.	0.	-1.	2.	5.	2.	2.	3.	5.	2.	-1.	1.	1.	0.	-4.	-2.	1.	-1.	0.	1.	5.	-4.
5	-1.	-4.	-1.	2.	-1.	-3.	-2.	0.	-1.	16.	1.	-1.	0.	3.	2.	1.	3.	2.	-1.	2.	3.	2.	2.	2.	1.	16.	-4.
6	-2.	-1.	1.	1.	1.	1.	1.	2.	2.	1.	0.	0.	5.	7.	6.	17.	1.	6.	7.	5.	6.	4.	4.	2.	3.	17.	-2.
7	5.	8.	2.	1.	3.	1.	0.	5.	16.	10.	7.	32.	21.	34.	30.	5.	7.	44.	30.	12.	21.	38.	12.	14.	15.	44.	0.
8	57.	69.	51.	62.	33.	46.	18.	33.	25.	38.	15.	18.	18.	13.	14.	11.	11.	4.	-2.	1.	6.	4.	2.	1.	23.	69.	-2.
9	-1.	-1.	-1.	0.	0.	2.	3.	2.	2.	2.	0.	-1.	-2.	0.	0.	0.	4.	6.	2.	-1.	-3.	-2.	-1.	1.	0.	6.	-3.
10	1.	0.	0.	-1.	-1.	0.	-2.	-2.	0.	-1.	-2.	-2.	1.	5.	3.	0.	0.	1.	1.	1.	3.	5.	3.	3.	1.	5.	-2.
11	5.	6.	6.	5.	6.	4.	3.	1.	3.	3.	2.	3.	5.	5.	1.	2.	5.	4.	2.	1.	0.	2.	3.	1.	3.	6.	0.
12	1.	0.	0.	1.	1.	0.	1.	1.	0.	0.	2.	0.	-1.	1.	0.	0.	2.	4.	5.	0.	-1.	1.	-2.	-1.	1.	5.	-2.
13	2.	1.	-3.	0.	1.	-1.	-1.	-1.	0.	-1.	1.	1.	0.	-1.	1.	1.	-2.	4.	3.	0.	3.	1.	0.	1.	0.	4.	-3.
14	-1.	-3.	-1.	0.	0.	1.	2.	0.	-1.	1.	2.	1.	2.	2.	3.	3.	1.	0.	0.	-1.	0.	2.	0.	-1.	1.	3.	-3.
15	2.	0.	3.	3.	0.	-1.	0.	1.	0.	2.	0.	-1.	1.	1.	2.	1.	0.	2.	5.	5.	1.	1.	2.	0.	1.	5.	-1.
16	1.	2.	3.	3.	2.	2.	-2.	-2.	0.	0.	1.	3.	4.	3.	1.	0.	2.	3.	1.	1.	1.	1.	2.	1.	1.	4.	-2.
17	2.	3.	3.	0.	-1.	0.	0.	1.	3.	2.	1.	2.	1.	-1.	2.	1.	-1.	3.	4.	3.	0.	-1.	3.	3.	1.	4.	-1.
18	-1.	-2.	0.	3.	3.	0.	-2.	-2.	2.	1.	0.	2.	1.	2.	0.	-2.	0.	2.	1.	-2.	-2.	0.	3.	1.	0.	3.	-2.
19	2.	2.	0.	1.	3.	2.	2.	1.	-1.	0.	1.	2.	-1.	0.	4.	1.	0.	-1.	-4.	-1.	2.	0.	-1.	0.	1.	4.	-4.
20	-2.	-1.	2.	0.	1.	3.	3.	3.	0.	0.	-1.	-1.	1.	-1.	2.	4.	2.	2.	1.	1.	3.	1.	-2.	-6.	1.	4.	-6.
21	-3.	3.	-2.	-2.	-1.	1.	3.	0.	-1.	0.	2.	2.	1.	0.	1.	3.	3.	1.	1.	0.	2.	5.	4.	3.	1.	5.	-3.
22	4.	5.	8.	13.	9.	9.	5.	1.	1.	4.	7.	3.	3.	5.	7.	5.	1.	3.	6.	2.	2.	3.	0.	-2.	4.	13.	-2.
23	0.	1.	0.	0.	-1.	3.	4.	2.	3.	3.	1.	2.	4.	6.	6.	6.	6.	2.	3.	6.	6.	7.	6.	3.	3.	7.	-1.
24	1.	0.	0.	0.	2.	2.	3.	4.	-1.	-1.	-2.	-1.	-1.	-2.	-2.	0.	1.	1.	2.	0.	-1.	-1.	-1.	-1.	0.	4.	-2.
25	0.	2.	0.	-2.	0.	-1.	-4.	-2.	0.	1.	-1.	-3.	-2.	-1.	2.	1.	2.	3.	0.	1.	2.	2.	2.	2.	0.	3.	-4.
26	1.	1.	2.	0.	-1.	1.	-1.	0.	2.	1.	-3.	1.	3.	1.	-2.	-4.	-4.	-3.	-4.	-3.	0.	0.	-1.	2.	0.	3.	-4.
27	5.	1.	0.	3.	5.	6.	5.	5.	4.	3.	3.	4.	5.	5.	3.	3.	5.	6.	5.	4.	3.	4.	3.	1.	4.	6.	0.
28	3.	3.	1.	1.	2.	2.	4.	4.			-1.	0.	4.	8.	5.	2.	2.	1.	2.	-1.	0.	3.	3.	1.	2.	8.	-1.
29	-1.	2.	1.	-1.	-2.	0.	1.	-1.	-1.		0.	1.	1.	0.	2.	4.	0.	1.	0.	-1.	0.	-1.	0.	3.	0.	4.	-2.
30	1.	-1.	3.	5.	-1.	1.	3.	1.	0.	0.	0.	1.	1.	0.	2.	3.	0.	-1.	-1.	-1.	0.	0.	1.	0.	1.	5.	-1.
31	2.	2.	-2.	-2.	1.	-2.	1.	5.	3.	0.	1.	2.	3.	0.	-1.	1.	-1.	-2.	-1.	0.	0.	2.	1.	0.	1.	5.	-2.
AVG	3.	3.	3.	3.	2.	2.	1.	2.	2.	3.	1.	3.	3.	3.	3.	2.	2.	3.	2.	1.	2.	3.	2.	1.	2.		
MAX	57.	69.	51.	62.	33.	46.	18.	33.	25.	38.	15.	32.	21.	34.	30.	17.	11.	44.	30.	12.	21.	38.	12.	14.		69.	
MIN	-3.	-4.	-3.	-2.	-3.	-5.	-4.	-2.	-1.	-1.	-3.	-3.	-2.	-2.	-2.	-4.	-4.	-3.	-4.	-4.	-3.	-2.	-2.	-6.			-6.

TOTAL HOURS = 744 NUMBER OF GOOD HOURS = 741 NUMBER OF MISSING HOURS = 3 DATA CAPTURE = 99.60 (PERCENT)

PM-2.5 µg/m3		DATE (DAY,HOUR)				DATE (DAY,HOUR)	
MONTHLY AVERAGE	2.						
-- 1HR AVERAGE --				-- 8HR RUNNING AVERAGE --			
HIGHEST AVERAGE	69.	8	2	HIGHEST AVERAGE	46.	8	8
2ND HIGHEST AVG.	62.	8	4	2ND HIGHEST AVG.	44.	8	7
-- 3HR RUNNING AVERAGE --				-- 24HR RUNNING AVERAGE --			
HIGHEST AVERAGE	61.	8	4	HIGHEST AVERAGE	31.	8	11
2ND HIGHEST AVG.	59.	8	3	2ND HIGHEST AVG.	31.	8	10

Wainwright Near-Term Air Quality Monitoring Program - Wainwright, Alaska
OCTOBER 2009

SHELTER TEMPERATURE - DEGREES C

HOURS (LST)

HR-BEG	00	01	02	03	04	05	06	07	08	09	10	11	12	13	14	15	16	17	18	19	20	21	22	23			
HR-END	01	02	03	04	05	06	07	08	09	10	11	12	13	14	15	16	17	18	19	20	21	22	23	24			
DAY																									AVG/	MAX/	MIN
1	26.4	26.4	26.6	26.5	26.4	26.4	26.3	26.3		27.1	27.4	27.2	27.3	26.9	27.0	27.1	27.2	27.1	26.7	26.9	26.8	26.7	26.6	26.5	26.8	27.4	26.3
2	26.4	26.3	26.8	26.5	26.4	26.2	26.1	26.1	26.1	26.0	25.6	26.1	26.6	26.4	26.3	26.9	27.0	26.8	26.8	26.8	26.8	26.8	26.7	26.7	26.5	27.0	25.6
3	26.6	26.1	25.9	26.0	25.9	25.8	25.4	25.4	25.3	25.3	25.4	25.6	25.8	25.9	26.0	26.0	26.0	25.9	26.0	26.1	26.2	26.2	26.3	26.4	25.9	26.6	25.3
4	26.4	26.4	26.7	26.7	26.7	26.7	26.7	26.5	26.5	26.4	26.3	26.3	26.4	26.4	26.5	26.5	26.6	26.5	26.6	26.5	26.4	26.4	26.5	26.6	26.5	26.7	26.3
5	26.5	26.5	26.7	26.6	26.5	26.5	26.5	26.8	26.9	26.9	27.0	27.1	27.1	27.3	27.5	27.7	27.9	27.9	28.0	28.1	27.9	27.9	28.1	28.1	27.3	28.1	26.5
6	28.2	28.4	28.6	28.4	28.5	28.3	28.3	28.3	28.3	28.2	28.2	28.3	28.5	28.8	29.2	29.8	30.3	30.5	30.0	29.2	28.8	28.5	28.2	27.8	28.7	30.5	27.8
7	27.6	27.3	27.2	26.9	26.7	26.4	26.3	26.2	25.9	25.9	25.9	25.9	26.0	26.3	26.7	27.4	27.4	27.4	26.6	26.3	25.8	25.4	25.4	25.6	26.4	27.6	25.4
8	25.3	25.4	25.6	25.7	25.5	25.8	25.5	25.7	25.6	25.7	25.6	25.9	25.6	25.5	25.4	25.4	25.5	25.7	25.8	25.9	26.1	26.0	27.4	27.3	25.8	27.4	25.3
9	28.0	28.1	27.6	28.3	28.1	28.0	28.1	28.1	28.2	28.4	28.5	28.6	28.7	29.0	29.3	29.3	29.1	29.1	29.0	29.0	29.1	29.1	29.1	29.0	28.6	29.3	27.6
10	29.0	29.0	29.3	29.3	29.2	29.1	29.0	29.0	28.9	28.9	28.8	28.8	28.6	28.6	28.4	28.3	28.2	28.1	27.9	27.8	27.8	27.8	27.9	28.0	28.6	29.3	27.8
11	28.1	28.2	28.5	28.4	28.4	28.4	28.4	28.4	28.5	28.6	28.7	28.8	28.7	28.8	28.8	28.7	28.9	29.1	29.1	28.9	28.9	28.9	28.8	28.4	28.6	29.1	28.1
12	28.2	28.3	28.7	28.5	28.5	28.4	28.5	28.5	28.5	28.6	28.5	28.0	28.0	28.2	28.8	28.6	28.5	28.5	28.6	28.5	28.5	28.4	28.1	28.1	28.4	28.8	28.0
13	28.1	28.1	28.0	28.0	28.1	27.7	27.7	28.2	28.3	28.3	28.4	28.5	28.6	29.0	29.5	29.8	29.9	30.1	30.0	29.8	29.5	29.2	28.8	28.4	28.8	30.1	27.7
14	28.1	28.0	28.3	28.3	28.2	28.0	27.8	27.7	27.6	27.6	27.7	27.8	27.9	28.0	28.1	28.3	28.4	28.5	28.7	28.8	28.7	28.4	28.3	28.2	28.1	28.8	27.6
15	27.8	27.6	27.6	27.4	27.2	27.6	27.8	27.8	27.8	27.8	28.0	28.1	28.1	28.2	28.5	28.8	28.6	28.0	27.9	27.9	27.9	27.9	27.8	27.7	27.9	28.8	27.2
16	27.6	27.3	28.2	27.9	27.5	27.4	27.3	27.1	26.9	27.7	27.4	27.0	27.0	27.1	27.4	27.6	27.6	27.3	27.0	27.3	27.4	27.3	27.3	27.2	27.4	28.2	26.9
17	27.3	27.8	27.9	27.6	28.0	27.1	27.4	28.2	27.4	26.9	27.5	28.1	27.5	27.0	27.4	27.6	27.9	27.3	27.2	27.5	27.0	26.9	27.2	27.9	27.5	28.2	26.9
18	27.9	27.5	28.4	27.9	27.6	28.3	28.1	28.6	28.2	28.7	28.2	28.7	28.3	28.9	28.5	28.4	28.3	28.9	28.7	28.6	28.5	28.5	28.6	28.4	28.4	28.9	27.5
19	28.6	28.2	28.2	29.1	29.5	29.6	29.6	29.6	29.5	28.5	29.1	29.4	29.5	29.6	28.8	29.1	29.4	29.7	29.6	29.4	29.4	29.3	29.3	29.2	29.2	29.7	28.2
20	29.2	29.0	28.5	28.5	28.5	28.5	28.4	28.8	29.0	28.7	28.7	28.7	28.8	28.8	28.9	28.9	28.8	28.6	29.2	29.1	30.3	32.5	31.7	31.4	29.2	32.5	28.4
21	31.8	31.2	31.5	31.3	31.1	31.4	32.0	32.2	32.8	33.0	32.3	31.9	32.6	33.1	31.0	29.0	27.8	26.8	25.8	25.4	24.8	25.8	28.2	28.1	30.0	33.1	24.8
22	25.9	25.8	26.3	28.2	29.5	28.3	26.2	26.2	28.7	27.6	25.4	26.5	28.6	28.8	28.2	27.1	26.5	25.9	26.1	26.8	27.4	28.5	29.1	29.4	27.4	29.5	25.4
23	29.4	29.5	29.6	30.4	30.4	30.4	30.2	30.5	32.6	32.6	31.0	29.8	29.5	29.8	29.2	28.5	28.1	27.4	27.7	27.8	27.4	27.3	27.5	27.5	29.3	32.6	27.3
24	27.4	27.2	27.3	26.9	26.8	27.1	27.1	26.9	26.6	26.3	26.0	25.9	25.7	25.6	25.5	25.4	25.3	25.1	25.0	25.8	27.1	28.2	28.7	28.4	26.6	28.7	25.0
25	28.2	28.2	28.3	28.4	28.4	28.3	28.3	28.3	28.3	28.3	28.4	28.4	28.6	28.8	29.0	29.0	28.9	28.8	28.8	28.4	27.8	27.1	27.1	27.1	28.3	29.0	27.1
26	26.9	26.9	27.1	27.2	27.0	26.6	27.0	26.9	28.8	27.1	27.1	27.0	27.1	27.2	27.8	27.6	27.4	27.4	27.5	27.8	27.9	28.2	28.9	29.5	27.5	29.5	26.6
27	29.4	29.4	30.0	30.0	30.1	30.1	30.0	30.0	29.9	29.9	29.8	29.9	29.8	29.8	29.0	28.4	28.0	27.7	27.8	27.5	27.2	27.1	27.0	26.9	28.9	30.1	26.9
28	27.1	27.2	27.3	27.5	27.6	27.5	27.5	27.6	27.7	27.0	27.1	27.6	27.8	27.9	28.2	28.4	28.5	28.5	28.3	28.2	27.7	27.7	27.8	27.2	27.7	28.5	27.0
29	27.2	27.1	27.2	27.2	27.2	27.1	27.0	27.0	26.8	26.7	26.8	27.3	27.3	26.6	27.1	27.8	28.5	29.3	29.7	29.8	29.8	29.7	29.4	29.9	27.9	29.9	26.6
30	29.4	29.3	28.3	29.7	29.6	30.1	29.8	30.2	29.9	29.8	29.6	29.6	29.7	29.5	29.0	27.7	27.4	27.0	27.4	27.4	27.6	27.3	27.3	27.6	28.8	30.2	27.0
31	27.8	27.8	27.9	27.9	28.0	27.9	27.4	26.3	25.4	24.8	24.4	24.0	23.7	23.6	23.7	24.2	24.6	24.2	23.9	23.6	23.3	22.8	22.4	22.1	25.1	28.0	22.1
AVG	27.8	27.7	27.9	28.0	28.0	27.9	27.8	27.9	28.0	27.8	27.7	27.8	27.9	27.9	27.9	27.8	27.8	27.7	27.7	27.6	27.6	27.7	27.8	27.8	27.8		
MAX	31.8	31.2	31.5	31.3	31.1	31.4	32.0	32.2	32.8	33.0	32.3	31.9	32.6	33.1	31.0	29.8	30.3	30.5	30.0	29.8	30.3	32.5	31.7	31.4		33.1	
MIN	25.3	25.4	25.6	25.7	25.5	25.8	25.4	25.4	25.3	24.8	24.4	24.0	23.7	23.6	23.7	24.2	24.6	24.2	23.9	23.6	23.3	22.8	22.4	22.1			22.1

TOTAL HOURS = 744 NUMBER OF GOOD HOURS = 743 NUMBER OF MISSING HOURS = 1 DATA CAPTURE = 99.87 (PERCENT)

SHELTER TEMPERATURE DEGREES C		DATE (DAY,HOUR)	
MONTHLY AVERAGE	27.8		
MONTHLY MAXIMUM	33.1	21	14
MONTHLY MINIMUM	22.1	31	24

Wainwright Near-Term Air Quality Monitoring Program - Wainwright, Alaska
October 2009

PM_{10} and $PM_{2.5}$ – µg/m^3

Date			Concentration (Actual)	
Year	**Month**	**Day**	**PM_{10}**	**$PM_{2.5}$**
2009	10	1	13	-1
2009	10	2	22	1
2009	10	3	21	3
2009	10	4	7	1
2009	10	5	19	1
2009	10	6	69	3
2009	10	7	44	15
2009	10	8	52	23
2009	10	9	3	0
2009	10	10	6	1
2009	10	11	12	3
2009	10	12	2	1
2009	10	13	3	0
2009	10	14	6	1
2009	10	15	12	1
2009	10	16	19	1
2009	10	17	11	1
2009	10	18	6	0
2009	10	19	3	1
2009	10	20	3	1
2009	10	21	7	1
2009	10	22	7	4
2009	10	23	8	3
2009	10	24	3	0
2009	10	25	1	0
2009	10	26	4	0
2009	10	27	21	4
2009	10	28	11	2
2009	10	29	2	0
2009	10	30	2	1
2009	10	31	2	1
Average			13	2
Maximum			69	23
Minimum			1	-1

Appendix E

Digital Validated Data

****
Wainwright Near-Term Ambient Air Quality Monitoring Station
Fourth Quarter Monitoring Data
August 1 through October 31, 2009
****

Included with this report is a digital copy of all validated data collected during the reporting period from the Wainwright Near-Term Ambient Air Quality Monitoring station in Wainwright, Alaska, which is owned by ConocoPhillips Alaska, Inc., and operated and maintained by AECOM Environment.

Data are arranged in monthly files, which are named as follows:

WNT_0809.prd – August 2009
WNT_0909.prd – September 2009
WNT_1009.prd – October 2009

One line of descriptive text is included at the beginning of each month for the sake of clarity, and the subsequent lines contain hourly sequential data in the following format:

COLUMNS	PARAMETER	UNITS	MISSING FLAG	START DATE
01-02	YEAR			
03-05	JULIAN DAY			
06-07	HOUR ENDING			
08-13	YEAR			
14-15	MONTH			
16-17	DAY			
18-19	HOUR ENDING			
20-29	HORIZ. WIND SPEED	M/S	-999.	11-01-2008
30-39	HORIZ. WIND DIR.	DEGREES	-999.	11-01-2008
40-49	TEMPERATURE	DEGREES C	-999.	11-01-2008
50-59	OXIDES OF NITROGEN (NOx)	PPM	-999.	11-08-2008
60-69	NITROGEN DIOXIDE (NO2)	PPM	-999.	11-08-2008
70-79	NITROGEN OXIDE (NO)	PPM	-999.	11-08-2008
80-89	SULFUR DIOXIDE (SO2)	PPM	-999.	11-08-2008
90-99	OZONE	PPM	-999.	11-08-2008
100-109	CARBON MONOXIDE	PPM	-999.	11-08-2008
110-119	ACTUAL PM10	µg/m3	-999.	11-08-2008
120-129	ACTUAL PM2.5	µg/m3	-999.	11-11-2008
130-139	SHELTER TEMPERATURE	DEGREES C	-999.	11-08-2008

From: Eric Hansen [mailto:ehansen@Environcorp.com]
Sent: Tuesday, December 22, 2009 6:27 PM
To: boys.paul@epa.gov
Cc: Mark Schindler; Rodger Steen; Pat Nair
Subject: Supplemental BACT analyses for CO emissions from MLC and logging winch engines

Paul,

I have attached a narrative discussion of our investigation of the application of CDPF and oxidation catalyst technology to the mud line cellar compressor engines and to the logging winch engine. As we discussed, we think the actual emission rate of the engines will be significantly lower than the Tier 3 limits, and that the actual cost effectiveness of these add-on controls will be much lower. We request that you apply the definition of BACT (it's an emission limit – not a control technology) as you write permit conditions. If you do so, we may be able to achieve the BACT emission limit without the cost, logistical headaches, and potential operational problems of unnecessary add-on control equipment. The attached spreadsheet is the same as the one I sent an hour ago.

I am in all day tomorrow, Wednesday, and Thursday morning. Please do not hesitate to call if you have any questions.

Eric Hansen, Principal
ENVIRON International Corporation
19020 33rd Avenue West, Suite 310
Lynnwood, WA 98036
Direct dial: 425.412.1811
Cell: 206.794.6012

This message contains information that may be confidential, privileged or otherwise protected by law from disclosure. It is intended for the exclusive use of the Addressee(s). Unless you are the addressee or authorized agent of the addressee, you may not review, copy, distribute or disclose to anyone the message or any information contained within. If you have received this message in error, please contact the sender by electronic reply to email@environcorp.com and immediately delete all copies of the message.

ENVIRON

December 22, 2009

MEMORANDUM

To: Paul Boys, EPA Region 10 ENVIRON Project No: 0322090A
CC: Mark Schindler, Octane LLC

From: Eric Hansen, ENVIRON Project Name: Shell Chukchi Sea PSD Permit

Subject: Add-on control technologies to reduce CO emissions from the MLC and logging winch engines

---

EPA recently reviewed information submitted by Shell that indicated catalytic diesel particulate matter filters (CDPF) and oxidation catalysts are not cost effective control options for controlling particulate matter (PM) emissions from the three Tier 3 mud line cellar (MLC) compressor engines. EPA agreed that these technologies are not cost-effective for controlling PM emissions. However, EPA has indicated the cost information submitted suggests CDPFs and oxidation catalysts are cost-effective options for controlling carbon monoxide (CO) emissions from those engines.

Are catalytic diesel particulate filters a cost-effective option for CO emissions from the MLC engines?

We agree that cost information submitted to demonstrate that CDPFs are not cost effective for controlling particulate matter does not support the same conclusion for CO emissions. However, all the costs involved with installation of the CDPFs were not submitted in the PM BACT discussion. Although we were aware of the additional costs that would be incurred, the miniscule PM emission reduction to be achieved with installation of CDPFs resulted in a clear dismissal of this technology without the additional effort to document all the costs involved with installation.

Although the ambient impact of CO emissions is negligible, we acknowledge that disclosure of all installation costs is needed to document that CDPF technology is not cost-effective for controlling CO. ENVIRON contacted Smith Power Products of Reno, Nevada to obtain budgetary costs for equipment and installation costs of CDPFs (and oxidation catalysts) for the 540 HP MLC engines. Mr. John De La Hunt noted that a single CDPF would be appropriate for an engine of approximately 250 HP (such as the logging winch engine discussed below), but that two CDPFs are likely to be required for engines of 540 HP engines. He identified a budgetary cost of $25,000 for the equipment and $7,000 for installation.

As discussed in both the Chukchi Sea and Beaufort Sea PSD permit applications and in supplemental BACT information submitted in December 2009, the mud line cellar compressor engines are part of a packaged transportable assembly that is readily moved on and off the ship. The entire package is approximately the size of a 20-foot long shipping container. Shell's Arctic logistics team indicates the control equipment would need to be installed at a machine shop. The most cost-effective location for this work to be done would be Anchorage. Conducting the work in Anchorage reduced the installation cost by about $30,000 per engine, as

the cost of shipping the engines to the vendor location is high. However, Shell would need to bring the technician to Anchorage to oversee the modifications for installing CDPF. In addition, the attached Table 1 identifies costs for Shell personnel and other commonly acknowledged line items. If one assumes that the base case is a CO emission rate of 2.61 grams per brake horsepower hour (g/bhp-hr) and that a CDPF would reduce CO emissions by 80 percent, the CDPF would control PM emissions at a cost of $9,848 per annual ton removed. This is clearly not cost effective, especially for a pollutant such as CO.

Shell contacted the engine vendor and found that the manufacturer expects CO emissions to be on the order of 0.5 g/bhp-hr. Substituting that expected emission rate for the base CO emission rate, the calculated cost effectiveness of installing CDPF is approximately $51,000 per annual ton removed. However, Shell bases its cost effectiveness calculations primarily on the Tier 3 CO emission rate and identifies this additional information only to support our conclusion that the CDPF is not a cost effective option for controlling CO emissions from the MLC engines.

We also note that the incremental cost of installing a CDPF compared with an oxidation catalyst (addressed in Table 2 and discussed below), is approximately $18,000 per annual ton removed. This far exceeds any reasonable cost-effectiveness metric.

Are oxidation catalysts a cost-effective option for controlling CO emissions from MLC engines?

EPA's review of oxidation catalysts as a PM control technology also revealed the possibility that this technology would be cost effective for CO control. As noted above, ENVIRON contacted Smith Power Products of Reno, Nevada to obtain budgetary costs for equipment and installation costs of CDPFs and oxidation catalysts. Mr. John De La Hunt noted that an oxidation catalyst appropriate for 540 HP engine would cost approximately $4,560 and would cost approximately $1200 for installation.

The cost effectiveness calculations in Table 2 are again based on the assumption that the work could take place in Anchorage (the most cost-effective location if the ship is nearby). Based on a 2003 California Air Resources Board study of in-use equipment, we believe it is appropriate to assume a 47% reduction in CO emissions from an oxidation catalyst.[1] Assuming a base emission rate based on the Tier 3 emission limit of 2.61 g/bhp-hr, adding an oxidation catalyst would reduce CO emissions by 0.74 tons per year at a cost of $4,323 per annual ton removed. Compared with the logistical effort required to purchase, engineer, and install an oxidation catalyst (let alone the $12,000/engine capital cost), we do not believe the 0.74 ton per year reduction is sufficient to justify the effort and capital cost. Furthermore, the predicted ambient air quality impacts of the entire drilling operation are less than the threshold EPA deems to be a significant impact.

We note that if we substitute the emission rate the engine vendor expects to see in practice (0.5 g/bhp-hr) for the base case, the expected reduction is about 0.14 tons per year and the calculated cost effectiveness of installing an oxidation catalyst is approximately $22,500 per annual ton removed.

---

[1] CARB, 2003. Staff Report: Initial Statement of Reasons for Proposed Rulemaking. Airborne Toxic Control Measure for Stationary Compression Ignition Engines.

Is a catalytic diesel particulate filter a cost-effective option for CO emissions from the logging winch engine?

As noted above, ENVIRON contacted Smith Power Products of Reno, Nevada to obtain budgetary costs for equipment and installation costs of CDPFs and oxidation catalysts. Mr. John De La Hunt noted that a CDPF appropriate for 250 HP engine would cost approximately $12,500 and would cost approximately $4,000 to install.

Shell would need to bring the vendor technician to Anchorage to oversee the modifications for installing CDPF. In addition, the attached Table 3 identifies costs for Shell personnel and other commonly acknowledged line items. If one assumes that the base case is a CO emission rate of 2.61 grams per brake horsepower hour (g/bhp-hr) and that a CDPF would reduce CO emissions by 80 percent, the CDPF would reduce CO emissions 2.1 tons per year at a cost of $3,329 per annual ton removed.

We acknowledge that this appears cost effective when applying typical cost-effectiveness criteria but do not believe the time, effort, and cost to arrange for the installation of a CDPF on a leased effort is offset by an emission reduction of only 2.1 tons per year. In this application, there is no economy of scale that might justify the logistical effort.

Is catalytic oxidation a cost-effective option for CO emissions from the logging unit winch engine?

As noted above, ENVIRON contacted Smith Power Products of Reno, Nevada to obtain budgetary costs for equipment and installation costs of CDPFs and oxidation catalysts. Mr. John De La Hunt noted that an oxidation catalyst appropriate for 250 HP engine would cost approximately $2,560 and would cost approximately $1,200 for installation.

The cost effectiveness calculations in Table 4 are again based on the assumption that the work could take place in Anchorage. Based on a 2003 California Air Resources Board study of in-use equipment, we believe it is appropriate to assume a 47% reduction in CO emissions from an oxidation catalyst. Assuming a base emission rate based on the Tier 3 emission limit of 2.61 g/bhp-hr, adding an oxidation catalyst would reduce CO emissions by 1.2 tons per year at a cost of $2,123 per annual ton removed.

We acknowledge that this appears cost effective when applying typical cost-effectiveness criteria. However, compared with the logistical effort required to purchase, engineer, and install an oxidation catalyst (let alone the $10,000 capital cost), we do not believe the 1.2 ton per year reduction is sufficient to justify the effort and capital cost. Furthermore, the predicted ambient air quality impacts of the entire drilling operation are less than the threshold EPA deems to be a significant impact.

Thank you for the opportunity to provide you with a summary of our cost-effectiveness calculations. Please do not hesitate to contact me if you have any questions (425-412-1811 or ehansen@environcorp.com).

Eric Hansen, Principal

ENVIRON International Corporation

Summary of BACT Analysis

			Mud Line Cellar Compressors			Incremental Cost
	Cat C-15	Installed cost	Annual cost	Tons removed	$/ton removed	Effectiveness
Oxycat	540	$12,145	$3,184	0.7	$4,323	
CDPF	540	$48,233	$12,346	1.3	$9,848	$17,718
	Cat C-7		**Logging Winch Engine**			
Oxycat	250	$9,918	$2,618	1.2	$2,123	
CDPF	250	$27,121	$6,986	2.1	$3,329	$5,046

Table 1. Mud Line Cellar CDPF Cost Effectiveness

CAPITAL COSTS									
DIRECT COSTS								**COST**	**Source**
I. Purchased Equipment									
	a. Primary Equipment							$25,000	Smith Power Products, Inc
	b. Instrumentation (None)							$0	
	c. Sales tax (0.08*a)							$0	OAQPS
	d. Freight (0.05*a)							$1,250	OAQPS
					Total Purchases Equipment Cost [TEC]			$26,250	*Calculation*
II. Direct Installation Costs									
	a. Foundations and Supports (0.08*TEC)							$0	OAQPS
	b. Handling and Erection (0.14*TEC)							$3,675	OAQPS
	c. Electrical (0.04*TEC)							$0	OAQPS
	d. Piping (0.02*TEC)							$525	OAQPS 6" stainless
	e. Insulation for Ductwork (0.01*TEC)							$263	OAQPS
	f. Painting (0.01*TEC)							$0	OAQPS
					Total Direct Costs [TDC](I+II)			$4,463	*Calculation*
INDIRECT COSTS									
III. Indirect Installation									
	a. Engineering and Supervision (0.10*TEC)							$2,625	OAQPS
	b. Construction and Field Expenses (0.05*TEC)							$1,313	OAQPS
	c. Contractor Fee							$7,000	Smith Power Products, Inc.
	d. Contractor travel							$5,000	Shell Estimate
	e. Contingencies (0.03*TEC)							$788	OAQPS
IV. Other Indirect Costs									
	a. Startup and Testing (0.03*TEC)							$788	OAQPS
	b. Working Capital (30 days of direct operating costs [I-VII below/12])							$8	OAQPS
					Total Indirect Costs [TIC](III+IV)			$17,521	*Calculation*
					Total Capital Costs [TCC] (TEC+TDC+TIC)			$48,233	*Calculation*
					Total Annualized Capital Costs [TACC] (5 years @ 7% interest)			**$11,764**	*Calculation*
DIRECT ANNUALIZED COSTS									
DIRECT OPERATING COSTS (DOC)									
I. Labor for operations ($100/person-hour)								$0	Engineering Estimate
II. Supervisory Labor (0.15* operations labor)								$0	OAQPS
III. Maintenance Labor ($100/person-hour)(1 hr/yr)								$100	Engineering Estimate
IV. Replacement Parts									
	a. None							$0	Engineering Estimate
V. ULSD Fuel Cost = (none)								$0	Pettit Oil (2004)
VI. Urea costs =(none)								$0	CCA (2004)
VII. Fuel Penalty (5% reduction if fuel econ.) (21.3 gal/hr)*(500 hr/yr)*($1.90/gal)*(0.05)								$0	Unknown. 3" water backpressure
INDIRECT OPERATING COSTS (IOC)									
VIII. Overhead (0.6*O&M costs(I-III of DOC)								$0	OAQPS
IX. Administration (0.02*TCC)								$0	OAQPS
X. Insurance (0.01*TCC)								$482	OAQPS
					Total Direct Annualized Costs [TDAC] (DOC+IOC)			**$582**	*Calculation*
					TOTAL ANNUALIZED COSTS SCR [TAC_{SCR}] (TACC+TAC)			**$12,346**	*Calculation*
						CO		**Total**	
Baseline emissions						1.567	tons/year		*Calculation*
Controlled emissions (80% control)						0.313	tons/year		*Calculation*
Reduction from baseline						1.254	tons/year	1.3	*Calculation*
Cost per ton Conrolled							***$/ton***	**$ 9,848**	*Calculation*
OAQPS	"EPA Air Pollution Cost Manual" Sixth Edition, January 2002, EPA/452/B-02-001								
	Office of Air Quaility Planning and Standards (OAQPS).								

Table 2. Mud Line Cellar Oxidation Catalyst Cost Effectiveness

CAPITAL COSTS									
DIRECT COSTS								**COST**	**Source**
I. Purchased Equipment									
	a. Primary Equipment							$4,560	Smith Power Products, Inc
	b. Instrumentation (None)							$0	
	c. Sales tax (0.08*a)							$0	OAQPS
	d. Freight (0.05*a)							$228	OAQPS
					Total Purchases Equipment Cost [TEC]			$4,788	*Calculation*
II. Direct Installation Costs									
	a. Foundations and Supports (0.08*TEC)							$0	OAQPS
	b. Handling and Erection (0.14*TEC)							$0	OAQPS (see contractor fee)
	c. Electrical (0.04*TEC)							$0	OAQPS
	d. Piping (0.02*TEC)							$96	OAQPS 6" stainless
	e. Insulation for Ductwork (0.01*TEC)							$48	OAQPS
	f. Painting (0.01*TEC)							$0	OAQPS
					Total Direct Costs [TDC](I+II)			$144	*Calculation*
INDIRECT COSTS									
III. Indirect Installation									
	a. Engineering and Supervision (0.10*TEC)							$479	OAQPS
	b. Construction and Field Expenses (0.05*TEC)							$239	OAQPS
	c. Contractor Fee							$1,200	Smith Power Products, Inc.
	d. Contractor travel							$5,000	Shell Estimate
	e. Contingencies (0.03*TEC)							$144	OAQPS
IV. Other Indirect Costs									
	a. Startup and Testing (0.03*TEC)							$144	OAQPS
	b. Working Capital (30 days of direct operating costs [I-VII below/12])							$8	OAQPS
					Total Indirect Costs [TIC](III+IV)			$7,214	*Calculation*
					Total Capital Costs [TCC] (TEC+TDC+TIC)			$12,145	*Calculation*
					Total Annualized Capital Costs [TACC] (5 years @ 7% interest)			**$2,962**	*Calculation*
DIRECT ANNUALIZED COSTS									
DIRECT OPERATING COSTS (DOC)									
I. Labor for operations ($100/person-hour)								$0	Engineering Estimate
II. Supervisory Labor (0.15* operations labor)								$0	OAQPS
III. Maintenance Labor ($100/person-hour)(1 hr/yr)								$100	Engineering Estimate
IV. Replacement Parts									
	a. None							$0	Engineering Estimate
V. ULSD Fuel Cost = (none)								$0	Pettit Oil (2004)
VI. Urea costs =(none)								$0	CCA (2004)
VII. Fuel Penalty (5% reduction if fuel econ.) (21.3 gal/hr)*(500 hr/yr)*($1.90/gal)*(0.05)								$0	Unknown. 3" water backpressure
INDIRECT OPERATING COSTS (IOC)									
VIII. Overhead (0.6*O&M costs(I-III of DOC)								$0	OAQPS
IX. Administration (0.02*TCC)								$0	OAQPS
X. Insurance (0.01*TCC)								$121	OAQPS
					Total Direct Annualized Costs [TDAC] (DOC+IOC)			**$221**	*Calculation*
					TOTAL ANNUALIZED COSTS SCR [TAC_{SCR}] (TACC+TAC)			**$3,184**	*Calculation*
						CO		**Total**	
Baseline emissions						1.567	tons/year		*Calculation*
Controlled emissions (47% control)						0.831	tons/year		*Calculation*
Reduction from baseline						0.736	tons/year	0.74	*Calculation*
Cost per ton Conrolled							***$/ton***	**$ 4,323**	*Calculation*
OAQPS	"EPA Air Pollution Cost Manual" Sixth Edition, January 2002, EPA/452/B-02-001								
	Office of Air Quaility Planning and Standards (OAQPS).								

Table 3. Winch Engine CDPF Cost Effectiveness

CAPITAL COSTS									
DIRECT COSTS								**COST**	**Source**
I. Purchased Equipment									
	a. Primary Equipment							$12,500	Smith Power Products, Inc
	b. Instrumentation (None)							$0	
	c. Sales tax (0.08*a)							$0	OAQPS
	d. Freight (0.05*a)							$625	OAQPS
					Total Purchases Equipment Cost [TEC]			$13,125	*Calculation*
II. Direct Installation Costs									
	a. Foundations and Supports (0.08*TEC)							$0	OAQPS
	b. Handling and Erection (0.14*TEC)							$1,838	OAQPS
	c. Electrical (0.04*TEC)							$0	OAQPS
	d. Piping (0.02*TEC)							$263	OAQPS 6" stainless
	e. Insulation for Ductwork (0.01*TEC)							$131	OAQPS
	f. Painting (0.01*TEC)							$0	OAQPS
					Total Direct Costs [TDC](I+II)			$2,231	*Calculation*
INDIRECT COSTS									
III. Indirect Installation									
	a. Engineering and Supervision (0.10*TEC)							$1,313	OAQPS
	b. Construction and Field Expenses (0.05*TEC)							$656	OAQPS
	c. Contractor Fee							$4,000	Smith Power Products, Inc.
	d. Contractor travel							$5,000	Shell Estimate
	e. Contingencies (0.03*TEC)							$394	OAQPS
IV. Other Indirect Costs									
	a. Startup and Testing (0.03*TEC)							$394	OAQPS
	b. Working Capital (30 days of direct operating costs [I-VII below/12])							$8	OAQPS
					Total Indirect Costs [TIC](III+IV)			$11,765	*Calculation*
					Total Capital Costs [TCC] (TEC+TDC+TIC)			$27,121	*Calculation*
					Total Annualized Capital Costs [TACC] (5 years @ 7% interest)			**$6,615**	*Calculation*
DIRECT ANNUALIZED COSTS									
DIRECT OPERATING COSTS (DOC)									
I. Labor for operations ($100/person-hour)								$0	Engineering Estimate
II. Supervisory Labor (0.15* operations labor)								$0	OAQPS
III. Maintenance Labor ($100/person-hour)(1 hr/yr)								$100	Engineering Estimate
IV. Replacement Parts									
	a. None							$0	Engineering Estimate
V. ULSD Fuel Cost = (none)								$0	Pettit Oil (2004)
VI. Urea costs =(none)								$0	CCA (2004)
VII. Fuel Penalty (5% reduction if fuel econ.) (21.3 gal/hr)*(500 hr/yr)*($1.90/gal)*(0.05)								$0	Unknown. 3" water backpressure
INDIRECT OPERATING COSTS (IOC)									
VIII. Overhead (0.6*O&M costs(I-III of DOC)								$0	OAQPS
IX. Administration (0.02*TCC)								$0	OAQPS
X. Insurance (0.01*TCC)								$271	OAQPS
					Total Direct Annualized Costs [TDAC] (DOC+IOC)			**$371**	*Calculation*
					TOTAL ANNUALIZED COSTS SCR [TAC_{SCR}] (TACC+TAC)			**$6,986**	*Calculation*
						CO		**Total**	
Baseline emissions						2.623	tons/year		*Calculation*
Controlled emissions (80% control)						0.525	tons/year		*Calculation*
Reduction from baseline						2.099	tons/year	2.10	*Calculation*
Cost per ton Conrolled							***$/ton***	**$ 3,329**	*Calculation*
OAQPS	"EPA Air Pollution Cost Manual" Sixth Edition, January 2002, EPA/452/B-02-001								
	Office of Air Quaility Planning and Standards (OAQPS).								

Table 4. Winch Engine Oxidation Catalyst Cost Effectiveness

CAPITAL COSTS										
DIRECT COSTS									**COST**	**Source**
I. Purchased Equipment										
	a. Primary Equipment								$2,560	Smith Power Products, Inc
	b. Instrumentation (None)								$0	
	c. Sales tax (0.08*a)								$0	OAQPS
	d. Freight (0.05*a)								$128	OAQPS
					Total Purchases Equipment Cost [TEC]				$2,688	*Calculation*
II. Direct Installation Costs										
	a. Foundations and Supports (0.08*TEC)								$0	OAQPS
	b. Handling and Erection (0.14*TEC)								$376	OAQPS
	c. Electrical (0.04*TEC)								$0	OAQPS
	d. Piping (0.02*TEC)								$54	OAQPS 6" stainless
	e. Insulation for Ductwork (0.01*TEC)								$27	OAQPS
	f. Painting (0.01*TEC)								$0	OAQPS
						Total Direct Costs [TDC](I+II)			$457	*Calculation*
INDIRECT COSTS										
III. Indirect Installation										
	a. Engineering and Supervision (0.10*TEC)								$269	OAQPS
	b. Construction and Field Expenses (0.05*TEC)								$134	OAQPS
	c. Contractor Fee								$1,200	Smith Power Products, Inc.
	d. Contractor travel								$5,000	Shell Estimate
	e. Contingencies (0.03*TEC)								$81	OAQPS
IV. Other Indirect Costs										
	a. Startup and Testing (0.03*TEC)								$81	OAQPS
	b. Working Capital (30 days of direct operating costs [I-VII below/12])								$8	OAQPS
						Total Indirect Costs [TIC](III+IV)			$6,773	*Calculation*
					Total Capital Costs [TCC] (TEC+TDC+TIC)				$9,918	*Calculation*
			Total Annualized Capital Costs [TACC] (5 years @ 7% interest)						**$2,419**	*Calculation*
DIRECT ANNUALIZED COSTS										
DIRECT OPERATING COSTS (DOC)										
I. Labor for operations ($100/person-hour)									$0	Engineering Estimate
II. Supervisory Labor (0.15* operations labor)									$0	OAQPS
III. Maintenance Labor ($100/person-hour)(1 hr/yr)									$100	Engineering Estimate
IV. Replacement Parts										
	a. None								$0	Engineering Estimate
V. ULSD Fuel Cost = (none)									$0	Pettit Oil (2004)
VI. Urea costs =(none)									$0	CCA (2004)
VII. Fuel Penalty (5% reduction if fuel econ.) (21.3 gal/hr)*(500 hr/yr)*($1.90/gal)*(0.05)									$0	Unknown. 3" water backpressure
INDIRECT OPERATING COSTS (IOC)										
VIII. Overhead (0.6*O&M costs(I-III of DOC)									$0	OAQPS
IX. Administration (0.02*TCC)									$0	OAQPS
X. Insurance (0.01*TCC)									$99	OAQPS
				Total Direct Annualized Costs [TDAC] (DOC+IOC)					**$199**	*Calculation*
			TOTAL ANNUALIZED COSTS SCR [TAC_{SCR}] (TACC+TAC)						**$2,618**	*Calculation*
						CO			**Total**	
Baseline emissions						2.623	tons/year			*Calculation*
Controlled emissions (47% control)						1.390	tons/year			*Calculation*
Reduction from baseline						1.233	tons/year		1.2	*Calculation*
Cost per ton Conrolled							***$/ton***		**$ 2,123**	*Calculation*
OAQPS	"EPA Air Pollution Cost Manual" Sixth Edition, January 2002, EPA/452/B-02-001									
	Office of Air Quaility Planning and Standards (OAQPS).									

PM2.5 & PM10 Wainwright statistics

Julie Vergeront to: Suzanne Skadowski 01/05/2010 11:05 AM

From: "Rodger Steen" <rsteen@airsci.com>
To: Dave Bray/R10/USEPA/US@EPA
Cc: "'Kirk Lilley'" <kirk.lilley@comcast.net>, "'Octane - Mark Schindler'" <mark.octane@me.com>, "Duane Siler" <dsiler@crowell.com>
Date: 12/18/2009 12:05 PM
Subject: PM2.5 & PM10 Wainwright statistics

Wainwright PM25 & PM10 precip & wind stats.pdf

Wainwright PM2.5 &PM10 Baseline Data and Effect of Local Fugitive Dust Sources

	Daily PM2.5 Concentration (ug/m3)			Daily PM10 Concentration (ug/m3)		
	# Days	Average	Maximum	# Days	Average	Maximum
Precipitation Days [3]						
Non-High Wind Days [1]	52	2.8	7.0	54	13.4	54.0
High Wind Days [2]	6	3.8	7.0	4	13.8	28.0
Non-Precipitation Days [4]						
Non-High Wind Days [1]	133	2.7	11.0	126	15.7	91.0
High Wind Days [2]	36	6.1	23.0	35	20.3	114.0

[1] Days with less than 4 hours of winds greater than 10 meters/second.

[2] Days with at least 4 hours of winds greater than 10 meters/second.

[3] These days fall within the two day periods (on that day or on the previous day) where there is total precipitation > 0.01"

[4] These days fall within the two day periods (on that day or on the previous day) where there is total precipitation < 0.01"