The Johnson Company ENVIRONMENTAL SCIENCE AND ENGINEERING SOLUTIONS

ph (802) 229-4600
fax (802) 229-5876
100 State Street, Suite 600
Montpelier, VT 05602
www.johnsonco.com

SDMS DocID 474232

June 18, 2010

Joseph F. LeMay, P.E.
Office of Site Remediation and Restoration
USEPA Region 1
One Congress Street, Suite 1100
Boston, MA 02114-2023

Re: IAQA/VI Report of Results
UniFirst Property
Wells G&H Superfund Site, Woburn, Massachusetts

Dear Mr. LeMay:

As described in the Schedule of Activities included with the approved *Indoor Air Quality and Vapor Intrusion Assessment (IAQA/VI) Scope of Work Revision 2* (dated March 25, 2010), The Johnson Company, on behalf of UniFirst Corporation, is submitting the attached *Report of Results* summarizing work performed and data collected during the April 2010 IAQA/VI sampling event at the UniFirst Property in Woburn, Massachusetts. Per your request, the electronic data deliverable (EDD) for the validated data is provided in GISkey excel format. If you have any questions regarding the attached documents, please contact Tim Cosgrave.

Sincerely yours,

THE JOHNSON COMPANY, INC.

By: Bettina Longino
Bettina Longino, Ph.D.
Senior Managing Engineer

cc: Tim Cosgrave, Harvard Project Services LLC
William Graham, UniFirst Corporation
Jack Badey, UniFirst Corporation

(electronic copy without appendices distributed via email only)
Margaret McDonough, EPA
Peter Kahn, EPA
Cindy Lewis, EPA
Joe Coyne, MADEP
David Sullivan, TRC Solutions
Dianne Silverman, TRC Solutions
Elizabeth Denly, TRC Solutions
Jamie Stapleton, TRC Solutions

Superfund Records Center
Site: Wells G&H
Break: 8.3
Other: 474232

K:\1-2114-2\EPA Response 2009\Soil Vapor Response\ IAQA Report of Results June 2010\IAQA Report Trans 061810.docx

INDOOR AIR QUALITY AND VAPOR INTRUSION ASSESSMENT

REPORT OF RESULTS

UniFirst Property
Wells G&H Superfund Site
Woburn, Massachusetts

June 2010

Submitted To:
United States Environmental Protection Agency
Region 1
5 Post Office Square, Suite 100
Boston, Massachusetts 02109-3912

Prepared for:
UniFirst Corporation
68 Jonspin Road
Wilmington, Massachusetts 01887

The Johnson Company

ENVIRONMENTAL SCIENCE AND
ENGINEERING SOLUTIONS

PARTNERS FOR SMART THINKING
AND CREATIVE STRATEGIES

TABLE OF CONTENTS

EXECUTIVE SUMMARY III

1.0 INTRODUCTION 1

2.0 PROPERTY DESCRIPTION AND BACKGROUND 1

3.0 SCOPE OF WORK DEVELOPMENT AND OBJECTIVES 5

4.0 SAMPLING PROGRAM 7
- 4.1 PRE-SAMPLING ACTIVITIES 9
- 4.2 INSTALLATION OF SUB-SLAB VAPOR SAMPLING POINTS 11
- 4.3 INDOOR AMBIENT AIR ASSESSMENT 12
- 4.4 OUTDOOR AMBIENT AIR ASSESSMENT 14
- 4.5 SUB-SLAB VAPOR ASSESSMENT 16
- 4.6 FIELD ACTIVITIES QUALITY ASSURANCE EVALUATION 18

5.0 RESULTS AND DISCUSSION 19
- 5.1 DATA VALIDATION AND USABILITY EVALUATION 19
- 5.2 AMBIENT AIR SAMPLING RESULTS 21
- 5.3 SUB-SLAB SAMPLING RESULTS 23
- 5.4 PRELIMINARY HUMAN HEALTH RISK EVALUATION 26

6.0 SUMMARY AND CONCLUSIONS 29

7.0 RECOMMENDATIONS 31

8.0 REFERENCES 32

TABLES

Table 1	April 2010 Depth to Water-Table Measurements
Table 2	Analyte List for Sub-Slab Vapor and Ambient Air Sampling – April 2010
Table 3	Analytical Results for Ambient Air and Sub-Slab Vapor Samples – April 2010
Table 4	Summary Information for Ambient Air Samples
Table 5	Summary Information for Sub-Slab Vapor Samples

FIGURES

Figure 1	Property Plan
Figure 2	Current Building Layout and Final April 2010 IAQA/VI Sampling Locations
Figure 3	Approximate Locations of Former Operations Features
Figure 4	February 18, 2010 Pre-Sampling Building Inspection
Figure 5	March 15, 2010 Pre-Sampling Building Inspection
Figure 6	Select Air-Phase Petroleum Compound Concentrations in Sub-Slab Vapor and Ambient Air Samples
Figure 7	Select Chlorinated VOC Concentrations in Sub-Slab Vapor and Ambient Air Samples

APPENDICES (ON CD)

Appendix A Field Forms

A-1: PID Screening and Indoor Air Quality Building Survey, February 18, 2010

A-2: PID Screening, March 15, 2010

A-3: Structural GPR Scanning Report

A-4: Sub-Slab Vapor Sampling Point Construction Logs

A-5: Ambient Air and Sub-Slab Vapor Sample Collection Logs and Chain-of-Custody Records

Appendix B Field Activities Quality Assurance Review

Appendix C Laboratory Analytical Report

Appendix D Laboratory Analytical Data Validation Report

Appendix E Preliminary Risk Assessment Report

ATTACHMENT (ON CD)

Electronic Analytical Data Table

EXECUTIVE SUMMARY

This report summarizes work performed and data collected during the indoor air quality and vapor intrusion assessment (IAQA/VI) conducted at the UniFirst Property located at 15 Olympia Avenue in Woburn, Massachusetts between February and April 2010. Indoor air data measurements were collected previously inside the same building on the Property in 1989. Based on those indoor air data measurements, and subsequent evaluations conducted based on updated risk assessment guidance, the United States Environmental Protection Agency (USEPA) concluded that there were no unacceptable risk levels within the building. In May, 2009, however, USEPA requested a work plan to re-evaluate potential vapor intrusion risks at the Property, based on the results of new calculations that USEPA performed using historical soil and soil vapor samples collected outside the existing building. UniFirst submitted a scope of work (SOW) for the requested IAQA/VI to USEPA in October 2009, as well as revised SOWs in February and March 2010 responsive to comments received from USEPA and its contractors. The first round of IAQA/VI data collection was conducted between February and April 2010 in accordance with the revised SOW approved by USEPA in March 2010. The objectives of the IAQA/VI SOW were to:

- determine if vapor intrusion exposure pathways exist;
- collect sufficient data to evaluate any complete exposure pathways to commercial workers;
- evaluate the potential for sub-slab vapors to present an indoor air risk in the on-Property building; and
- use the data collected during this IAQA/VI to determine what, if any, mitigation measures may be appropriate.

To achieve these objectives, indoor air and sub-slab vapor samples were collected from 15 locations in the on-Property building, and outdoor air samples were collected from three locations outside the building. The in-building sampling locations provided full coverage of the building. Collection of all samples concurrently (i.e., during a single sampling event where the 15 indoor air samples were collected first and the 15 sub-slab samples were collected subsequently) from co-located sample locations allowed for direct comparison of sub-slab vapor and indoor air results.

Concentrations of volatile organic compounds (VOCs) in indoor air did not exceed acute exposure criteria or occupational criteria, and acute indoor air exposures to VOCs detected in indoor air were not estimated to pose significant risks to human health. Cumulative estimated carcinogenic and noncarcinogenic risks for current commercial/industrial workers and storage unit users did not exceed target risk levels for a short-term (5 year) exposure period. No imminent hazard condition as defined by the Massachusetts Contingency Plan (MCP) was found to exist at the Property.

Estimated excess lifetime carcinogenic risks for current commercial/industrial workers and storage unit users for a long-term (25 year) exposure period were within USEPA's target excess lifetime cancer risk range for Superfund sites of $1x10^{-6}$ to $1x10^{-4}$ and no samples exceeded $1x10^{-4}$ at any locations. Estimated excess lifetime carcinogenic risks exceeded the midpoint of the Superfund risk range ($1x10^{-5}$) at several individual locations (i.e., assuming a receptor would consistently remain at one location over the entire 25-year term). VOCs contributing to cumulative risk were tetrachloroethene (PCE), naphthalene, and 1,4-dichlorobenzene. PCE is the only potentially site-related VOC detected in indoor air samples at a concentration significantly above either ambient background or common residential air concentrations (USEPA, 2008). Naphthalene is a constituent in moth repellents and fuels and 1,4-dichlorobenzene is a constituent in moth repellents, cleaning products, and room deodorizers; both of these compounds are likely present in indoor air as a result of volatilization from materials used and stored in the on-Property building, and not from sub-slab vapor intrusion. When the risk assessment was executed for just PCE, all samples were within the Superfund target excess lifetime cancer risk range of $1x10^{-6}$ to $1x10^{-4}$ and no samples exceeded $1x10^{-4}$, but three locations in the southeastern area out of a total of 15 locations sampled in the building exceeded the midpoint of the Superfund risk range ($1x10^{-5}$) for the long-term commercial exposure period.

The monitoring results did not indicate any significant concentrations of air-phase petroleum hydrocarbons in sub-slab vapor. Elevated sub-slab vapor concentrations of PCE and, to a lesser extent, 1,1,1-trichloroethane (TCA) were observed. Sub-slab concentrations of

chlorinated VOCs were generally highest under the eastern portion of the building where elevated concentrations of these compounds were identified in soil and groundwater as a result of earlier environmental assessment activities. Sub-slab vapor data are consistent with historic detections in groundwater in soil and shallow bedrock beneath the building.

Observed PCE concentrations in sub-slab vapor are consistent with concentrations that could be generated by volatilization of PCE from underlying groundwater given the magnitude of historic PCE groundwater detections. For example, a PCE concentration in groundwater of approximately 550 micrograms per liter (μg/L) could generate a theoretical maximum equilibrium soil vapor concentration equal to the maximum observed sub-slab concentration of PCE if groundwater was the only source of VOCs to soil vapor. Thus, elevated sub-slab concentrations may be primarily, if not entirely, a result of volatilization of PCE from underlying groundwater.

Despite the fact that it is not reasonably anticipated that this building might be used for residential purposes in the future, the hypothetical future residential use scenario was evaluated. Cumulative carcinogenic and noncarcinogenic risks for hypothetical future residents on the Property for long-term (30 year) exposure periods exceeded relevant USEPA target risk ranges in several exposure areas.

A second round of sampling will be conducted in February 2011 in accordance with the revised SOW. Additional evaluation will be completed based on the data from both rounds of indoor air and sub-slab vapor sampling, and of the groundwater sampling data to be collected under a separately prepared scope of work.

1.0 INTRODUCTION

This Report of Results (Report) has been prepared on behalf of UniFirst Corporation (UniFirst) by The Johnson Company, Inc. (The Johnson Company) for submittal to the United States Environmental Protection Agency (USEPA). This Report summarizes work performed for the indoor air quality and vapor intrusion assessment (IAQA/VI) conducted at the UniFirst Property located at 15 Olympia Avenue in Woburn, Massachusetts, herein referred to as "the Property" (Figure 1), between February and April 2010, including two pre-sampling building inspections, sampling of indoor air and sub-slab vapor at 15 locations in the on-Property building, and sampling of outdoor air at three on-Property locations. All work was completed in accordance with the revised scope of work (SOW) approved by USEPA in March 2010.

2.0 PROPERTY DESCRIPTION AND BACKGROUND

The Property consists of approximately 3 acres zoned as "Industrial Park (I-P)." The chronology of building construction and operating history at the Property has been well documented in reports previously submitted to USEPA, including the *Summary of Unconsolidated-Deposits Investigations at the UniFirst Property, Woburn, Massachusetts* report (Unconsolidated Deposits Report) (Applied Groundwater Research, Ltd. and Environmental Project Control, Inc., 1994), the *Wells G and H Remedial Investigation, Part II, Final Report* prepared for USEPA (Alliance Technologies Corporation, 1986), and a letter from Harvard Project Services LLC to Joseph LeMay dated January 8, 2010 (HPS Letter).

The Property was undeveloped until 1965. Structures subsequently constructed on the property include Building A, constructed in November 1965, and two building additions: Building B added in 1966 and Building C added in 1978 (Figure 2). In the late 1970s, the loading dock at the east end of the Property was upgraded and enclosed. The current single story building encloses approximately 57,000 square feet (ft^2). All portions of the current building are slab-on-grade construction with concrete block walls. Since 1989, most of the building has been leased to Extra Space Storage, formerly known as Woburn Storage Depot. The leased space has been converted into storage units that are subleased individually to customers and a small

administration office located in the south central area of the building. The former Building A, B, and C areas and the current building configuration are shown on Figure 2.

The on-Property building is underlain by unconsolidated soils that consist of till and overlying native and non-native fill. The total thickness of unconsolidated deposits varies considerably across the Property. Beneath the northeast portion of the building, less than three feet of unconsolidated deposits are present above the underlying bedrock. This bedrock surface drops off to the west, and the unconsolidated deposits are at their thickest (approximately 55 to 65 feet) beneath the western portion of the building. Fill at the Property is generally described as a tan to brown sand and gravel with a minor silt-sized fraction. The contact of the fill with the underlying till is difficult to distinguish, likely because much of the fill was derived from similar on-Property or local deposits. Beneath the eastern portion of the building, the till is referred to as an "ablation till" and consists of a poorly-sorted mixture of silt, sand, and gravel with boulders common. An approximately 1.5-foot thick "lodgement till" has been logged beneath the ablation till and above the bedrock at some locations; however, it is not consistently present across the Property. The lodgement till is dense and has a coarse to fine sand and gravel grain size distribution with little silt. Additional geologic and hydrogeologic details for the unconsolidated soils underlying the on-Property building were presented in the Unconsolidated Deposits Report.

During the period shortly before the Property was developed, historical aerial photographs show significant surface disturbance on the Property consistent with excavation, debris piling, and surface staining. In particular, an aerial photograph taken in 1964 shows what appears to be soil-stained areas emanating from the northeast corner of the Property to the south and west, across the area over which the eastern portion of the existing building (i.e., Building B) was subsequently constructed. During Property investigations, this stained area was found to coincide with a waste-oil disposal area identified during trenching activities associated with installation of the UniFirst treatment system in 1992. Additional detail, including the 1964 aerial photograph, was presented in the November 1992 Pre-Design Work Plan (Water Waste & Land, Inc. et al., 1992) and the Unconsolidated Deposits Report.

The Property was acquired by B&S Realty Trust and leased to Interstate Uniform Service Corporation (IUS)[1] in 1965. Figure 3 illustrates approximate locations of former IUS operations features. Buildings A and C were historically used for garment storage or office space only; neither laundry operations nor storage or use of chemicals and equipment associated with those operations were conducted in Buildings A or C (HPS, 2009). For a short time, between 1967 and 1969, IUS operated a "white shirt laundry" in Building B. This operation consisted of one dry-cleaning machine and several conventional washing machines located on the west side of a north-south oriented concrete wall that remains today; the approximate locations of the washing machines and the dry cleaning machine are shown on Figure 3. The washing machines were located on a washroom trench that ultimately connected to the sanitary sewer. During the two years that the white shirt laundry operated, diatomaceous earth was used to filter tetrachloroethene (PCE) for reuse in the dry-cleaning machine. The used diatomaceous earth was put into drums for transport to a municipal landfill or placement in a facility dumpster that was subsequently offloaded by a commercial refuse hauler. There is neither historical evidence nor any data indicating that any diatomaceous earth was disposed of at the Property (HPS, 2009). All of the operations that IUS conducted on the Property that involved use or storage of PCE occurred after Building A and Building B were constructed.

Between 1977 and 1982, IUS maintained a 5000-gallon indoor storage tank that was supported on two steel cradles above the floor at the east end of Building B (Figure 3). The fill pipe for the tank was located outside the building, within the former at-grade loading dock at the east end of the building. The tank was used principally to store PCE for occasional distribution to IUS branch operations. Small quantities of less than 50 gallons at a time were reportedly pumped off for distribution to other locations. One load of 1,1,1-trichloroethane (TCA) also was reportedly delivered to the tank. In late 1979, a spill of approximately 100 gallons of PCE occurred inside Building B; the spill was reportedly noticed and cleaned up within an hour. No

[1] IUS changed its corporate name to UniFirst Corporation in 1986 and took title to the Property that same year.

floor drains or weep holes existed in this portion of the building. The solvent storage tank was permanently removed from the Property in late 1982 or early 1983.

Environmental investigations commenced at the Property in 1983. The investigations identified two areas at the Property where chlorinated solvents were apparently released to the ground surface: a waste-oil contamination area and an area to the south of the current loading dock. Investigation results showed that within the unconsolidated deposits these two release areas were limited in lateral extent (approximately 525 ft^2 and 700 ft^2, respectively), and evidence of residual dense nonaqueous phase liquid (DNAPL) was implied from concentrations detected in soil samples in small discontinuous zones within each area (Figure 3). PCE DNAPL is believed to have migrated predominantly downward with limited lateral spreading through the relatively thin (a few feet thick) unconsolidated deposits in these areas to the underlying bedrock. A substantial portion of the contaminated soils (approximately 60%) is believed to have been removed during excavation of an influent line trench and test pits between 1992 and 1994. A zone of low to moderate PCE soil concentrations extending southwestward from the east end of the Property (approximately 13,000 ft^2 in area) was identified and attributed to vapor migration upward from contaminated groundwater. Unconsolidated-deposits investigations previously undertaken at the Property prior to the results discussed in this report have included: logging and soil sampling from 32 borings and 13 test pits; installation of 14 soil vapor probes, 7 vapor monitoring wells, and 21 groundwater monitoring wells; chemical analysis of 140 unconsolidated deposit soil samples and more than 570 groundwater samples; characterization of approximately 60 soil samples for grain size, moisture content, carbon content, and other physical properties; petroleum hydrocarbon characterization of 29 unconsolidated deposit samples and bituminous-concrete pavement samples; and chemical analysis of approximately 30 soil vapor samples.

On September 30, 1992, UniFirst initiated the UC22 groundwater pumping and remediation system at the Property. UniFirst currently uses the northeast corner of the on-Property building for housing and operation of the groundwater treatment plant. Ongoing groundwater extraction from extraction well UC22, located at the northeast corner of the

Property (Figure 1), has lowered the groundwater table across the Property, and unconsolidated deposits underlying the eastern end of the building remain unsaturated throughout the year. The water table in the unconsolidated deposits is generally encountered at approximately 10 feet below ground surface (bgs) under and adjacent to the central and western portion of the building. Measured depth to water ranged from approximately 5.5 to 10 feet bgs in seven water-table wells (Table 1 and Figure 2) monitored immediately after completion of the April 2010 ambient air and sub-slab vapor sampling event.

3.0 SCOPE OF WORK DEVELOPMENT AND OBJECTIVES

Indoor air data measurements were collected inside the Property building in 1989. Based on those indoor air data measurements, and subsequent evaluations conducted based on updated risk assessment guidance, USEPA concluded that there were no unacceptable risk levels within the building (Unconsolidated Deposits Report, pp 3-4 to 3-5). In May, 2009, however, USEPA requested a work plan to re-evaluate potential vapor intrusion risks at the Property, based on the results of new, conservative calculations performed by the USEPA using historical soil and soil vapor samples collected outside the existing building.

On October 9, 2009, UniFirst submitted to USEPA an *Indoor Air Quality and Vapor Intrusion Assessment Scope of Work* (IAQA/VI SOW) for the UniFirst Property (The Johnson Company, 2009). The IAQA/VI SOW proposed collection of sub-slab vapor and indoor air data sufficient to evaluate both indoor air quality and the potential for sub-slab vapor to present an indoor air risk in the existing building, and collection of shallow groundwater data to measure concentrations of volatile organic compounds (VOCs) in shallow groundwater at the water table beneath the Property. USEPA provided comments on the IAQA/VI SOW in a December 18, 2009 letter and a January 21, 2010 meeting between USEPA, UniFirst, and W.R. Grace & Co. – Conn (W.R. Grace). In response to USEPA comments, UniFirst submitted a Revised IAQA/VI SOW and associated Quality Assurance Project Plan (QAPP) to USEPA on February 17, 2010 (The Johnson Company, 2010a,b). As agreed at the January 21, 2010 meeting, W.R. Grace and UniFirst prepared a separate *Vapor Intrusion Assessment Work Plan* (VIA Work Plan) and

associated QAPP for sampling and laboratory analysis of groundwater from on-Property and off-Property water-table wells (GeoTrans, 2010).

In response to USEPA comments on the Revised IAQA/VI SOW for the UniFirst on-Property building, UniFirst submitted a second Revised IAQA/VI SOW and a Revised QAPP to USEPA on March 25, 2010 (The Johnson Company, 2010c,d). The second Revised IAQA/VI SOW and Revised QAPP were approved by USEPA in a letter dated March 29, 2010. This Report presents data collected during implementation of the first round of sampling conducted in accordance with the approved IAQA /VI SOW.

The objectives of the approved IAQA/VI SOW were to:

- determine if vapor intrusion exposure pathways exist;
- collect sufficient data to evaluate any complete exposure pathways to commercial workers;
- evaluate the potential for sub-slab vapors to present an indoor air risk in the on-Property building; and
- use the data collected during this IAQA/VI to determine what, if any, mitigation measures may be appropriate.

To achieve these objectives, indoor air and sub-slab vapor samples were collected from 15 locations in the on-Property building. USEPA guidance recommends sampling of sub-slab or crawl space vapor concentrations and/or sampling of indoor air concentrations as the top tier (Tier 3) for site-specific evaluation of vapor intrusion to indoor air (USEPA, 2002). The collection of the samples concurrently (i.e., during a single sampling event where the 15 indoor air samples were collected first and the 15 sub-slab samples were collected subsequently) from co-located sample locations allowed for direct comparison between sub-slab vapor and indoor air results. Indoor air and sub-slab vapor samples were collected at three locations in Building A, 11 locations in Building B, and one location in Building C (Figure 2); these 15 data locations provided comprehensive coverage of the on-Property building. Exterior ambient air samples were collected at three locations outside the on-Property building (Figure 2) for purposes of correlating outdoor and indoor air quality conditions. The collection of these data provided the information necessary to meet the objectives of the IAQA/VI SOW.

The sampling program is described in Section 4.0. Analytical results for the IAQA/VI sampling event, including a discussion of data validation procedures and results, are described in Section 5.0. A summary and conclusions based on the IAQA/VI data are presented in Section 6.0. Section 7.0 presents recommendations arising from this IAQA/VI sampling event, including timing for the subsequent and final IAQA/VI sampling event.

4.0 SAMPLING PROGRAM

This section describes the IAQA/VI sampling program conducted between February and April 2010 at the UniFirst on-Property building. Additional details regarding sampling protocols and methods were provided in the approved IAQA/VI SOW and associated QAPP (The Johnson Company, 2010c,d).

The sampling program included:

- two pre-sampling visual building inspections and photoionization detector (PID) screenings of readily accessible areas of the on-Property building to identify and document conditions that could interfere with the indoor air sampling results. Features screened using the PID included all proposed sampling locations, corridors, office space, bathrooms, the treatment facility "pump room", cracks between floors and walls, and floor cracks/joints that were visible in readily accessible areas of the building;

- installation of 15 sub-slab vapor monitoring points (SV-01 through SV-15), including one location in the office area of the building, one location in the men's bathroom, and one location in the treatment facility "pump room";

- collection of indoor ambient air samples adjacent to each sub-slab monitoring point, except at four locations (SV-05, SV-07, SV-10, and SV-13) where USEPA requested that the indoor air sample be collected over a floor crack/joint and the sub-slab vapor sample be collected approximately 5 feet away from the crack/joint (an ambient air sample also was collected immediately above the sub-slab vapor sampling point at locations SV-10 and SV-13); and

- collection of exterior ambient air samples at three locations (OA-01 through OA-03) outside the building.

Massachusetts Department of Environmental Protection (MADEP) and/or USEPA or its contractors were present for or provided input during each significant field event, including building inspection, PID screening, sub-slab utility clearance, sub-slab vapor monitoring point installation, and ambient air and sub-slab vapor sample collection. Sampling locations are shown on Figure 2. Sampling locations were selected to provide comprehensive coverage of the on-Property building and took into consideration:

- several previous data sets from the Property;
- practical access constraints (i.e., storage unit areas are not readily accessible for sample collection);
- current building use (i.e., regular commercial worker use of the office, bathroom, and treatment facility "pump room");
- comments provided by USEPA in its comment letters, at the January 21, 2010 meeting, and through its contractors;
- pre-sampling visual building inspection and PID screenings conducted on February 18, 2010 and March 15, 2010; and
- the "EPA revised UniFirst VI Sampling Location Figure 03-24-10" transmitted to UniFirst by USEPA in an email dated March 24, 2010.

The Johnson Company derived a proposed analyte list for the IAQA/VI that included contaminant compounds considered to be volatile (per 40 CFR Part 51.100) and that had been detected previously in environmental samples collected on the Property. The predominant chemicals previously detected in soil vapor, soil, and/or groundwater samples collected from on-Property unconsolidated deposits were PCE, trichloroethylene (TCE), and TCA. Only PCE, TCE, and their breakdown product 1,2-dichloroethene (1,2-DCE) were previously detected in soil vapor samples. PCE and TCE degradation product vinyl chloride and TCA degradation product 1,1-dichloroethene also had been detected in groundwater samples from the Property and thus were included on the proposed analyte list. At the request of the USEPA, additional analytes, including air phase petroleum hydrocarbons, also were analyzed and evaluated during this IAQA/VI sampling event. The final analyte list for the IAQA/VI sampling event is shown in Table 2. Samples were analyzed using Modified EPA Method TO-15 with Selective Ion

Monitoring (SIM) and Massachusetts Air-Phase Petroleum Hydrocarbons (MA APH) Method, with the target reporting limits shown in Table 2.

4.1 PRE-SAMPLING ACTIVITIES

Prior to conducting the IAQA/VI sampling, The Johnson Company performed two visual building inspections and PID screenings of readily accessible areas of the on-Property building (i.e., all proposed sampling locations, corridors, office space, bathrooms, and the treatment facility "pump room") to identify and document any conditions that could interfere with the indoor air sampling results. The Johnson Company did not enter individual storage units rented to storage facility customers.

The first inspection and PID screening was performed on February 18, 2010 to allow sufficient notice and discussions of findings with USEPA regarding potential adjustments to sample locations. Representatives of The Johnson Company and HPS inspected the on-Property building for floor cracks, joints, and other slab penetrations that were visible in readily accessible areas of the building and screened the penetrations with a PID. Identified features are shown on Figure 4. PID screening of identified cracks/joints/penetrations and all proposed indoor air/sub-slab sampling locations was performed using a miniRae 3000 PID calibrated in accordance with JCO-SOP-044 (The Johnson Company, 2010d). The PID calibration and field screening form are included in Appendix A-1. During the winter heating season, the building is heated using approximately 12 ceiling-suspended thermostat-controlled natural gas heaters. The ceiling-suspended heaters were cycling on and off during the building inspection.

Non-zero PID readings were detected using the miniRae 3000 at locations H1 and J8; readings at all other locations were zero. Non-zero PID readings are shown on Figure 4. Based on the PID screening, adjustments to proposed sampling locations SV-07, SV-11, and SV-13 (highlighted in Figure 4) were recommended to the USEPA. Following the building inspection and PID screening, an interview was conducted with Mr. Pete Chambers, the on-site manager for the building tenant (Extra Space Storage). The completed Indoor Air Quality Building Survey form is included in Appendix A-1. No adjustments to proposed sampling locations were recommended based on the tenant interview. Potential VOC sources were identified in the

building, including air fresheners, carpet/upholstery cleaners, and bathroom cleaners; UniFirst requested that these chemicals be removed from the building by the tenant prior to the IAQA/VI sampling. Chemicals were removed from the building on April 9, 2010, two days before the indoor air sampling event was conducted.

USEPA was notified of the second building inspection and PID screening schedule at least one week prior to inspection. The second building inspection and PID screening was conducted on March 15, 2010 with USEPA contractor (TRC) and MADEP representatives. The Johnson Company performed a PID re-screening of the features identified during the February 18, 2010 screening (Figure 4); no new floor cracks, joints, or other slab penetrations were identified during the second building inspection. PID screening of previously-identified cracks/joints/penetrations and all proposed indoor air/sub-slab sampling locations was performed using a miniRae 3000 PID calibrated in accordance with JCO-SOP-044 (The Johnson Company, 2010d). The PID calibration and field screening form are included in Appendix A-2. TRC screened some features using a ppbRae 3000 PID; TRC calibration and PID screening records were not provided to The Johnson Company. PID readings relayed verbally by TRC were noted on the field screening form included in Appendix A-2. As noted above, the building is heated using approximately 12 ceiling-suspended thermostat-controlled natural gas heaters. The ceiling-suspended heaters also were cycling on and off during the March 15 building inspection.

Non-zero PID readings were detected using the miniRae 3000 at locations SV-13 (joints J6 to J8), C6, J1, J2, J4, and J15, and at the utility penetration in the wall of the men's bathroom; readings at all other locations were zero. Non-zero PID readings are shown on Figure 5. Based on the PID screening, adjustments to proposed sampling locations SV-05, SV-10, and SV-14 (highlighted in Figure 5) were recommended to USEPA.

On March 24, 2010, USEPA provided to UniFirst a figure titled "EPA revised UniFirst VI Sampling Location Figure 03-24-10" that was annotated with PID readings recorded by TRC during the March 15, 2010 building inspection and arrows relocating sampling locations SV-05, SV-07, SV-10, and SV-13; the figure is included in Appendix A-2. The USEPA figure also directed that at the four relocated positions (SV-05, SV-07, SV-10, and SV-13), sub-slab samples

be collected approximately five feet away from the crack/joint and indoor air samples be collected over the crack/joint with the highest recorded PID reading.

Final sub-slab vapor/indoor air sampling locations SV-01 through SV-15 are shown on Figure 2.

4.2 INSTALLATION OF SUB-SLAB VAPOR SAMPLING POINTS

Prior to installation of the sub-slab vapor sampling points, the area around each point was scanned by a private utility locator to identify sub-slab utilities, conduits, obstructions, or other drilling restrictions. The work was conducted on April 7, 2010 by ProScanning of Boston, Massachusetts under the oversight of The Johnson Company and a TRC representative. An approximately 4-foot by 4-foot area around each location was scanned with a 1600 megahertz (MHz) ground penetrating radar (GPR) to check the concrete slab and the area immediately below the slab for obstructions. Obstructions were marked on the concrete, and final locations were adjusted as necessary and approved in the field by the TRC representative. At all sampling locations, the slab was approximately 6-inch concrete slab on grade with 6-inch on center wire mesh throughout. After clearing locations SV-01 through SV-15 using the 1600 MHz antenna, ProScanning used a 400 MHz GPR antenna at some locations in an effort to obtain additional sub-slab data; the ProScanning report is included as Appendix A-3. Existing sub-slab sample points SV-01 through SV-15 will be removed to prevent tampering and damage; the points will be reinstalled using the methodology presented in the approved IAQA/VI SOW in advance of the next sampling round.

Sampling point installation and integrity testing were performed on April 7 and 8, 2010, in accordance with JCO-SOP-062 (The Johnson Company, 2010d). Each sub-slab vapor monitoring point was installed by drilling a shallow outer hole (approximately 1-inch diameter) approximately 2 inches into the concrete slab followed by a deeper inner hole (approximately ¼-inch diameter) that penetrated the approximately 6-inch concrete slab. Each sub-slab sample point consisted of ¼-inch diameter stainless steel tubing connected to ⅛-inch NPT surface connector sealed in place using permagum (Virginia Kmp PP-22 Sealing Gum) between the inner and outer holes and hydraulic cement at the slab surface. Virginia Kmp PP-22 Sealing

Gum is a product appropriate for soil vapor sampling applications (New York State Department of Health, Guidance for Evaluating Soil Vapor Intrusion in the State of New York, October 2006). Sub-slab sampling point construction logs are included in Appendix A-4.

Sub-slab sampling points were integrity tested on April 8, 2010 using ultra high purity helium as the tracer gas. At each location, the sampling point was isolated from indoor ambient air, and the tracer gas was introduced into an enclosure surrounding the sampling point while ambient air was vented from the enclosure. Sub-slab sampling points were tested for the presence of the tracer gas using a sampling rate of approximately 575 milliliters per minute (mL/min) and a MGD-2000 portable handheld gas detection meter to determine the concentration of the tracer gas in the purged vapor sample. If the helium concentration in the purge vapor exceeded one percent (1%) of the concentration within the enclosure, the sampling point was resealed and re-tested. All of the sub-slab sampling points except SV-04 and SV-09 passed the initial integrity testing. At these two locations, the probe was re-sealed with permagum and hydraulic cement, the cement was allowed to set for approximately six hours, and the point was re-tested. Both points passed integrity testing following re-sealing. Integrity testing field records are included on the sub-slab sampling point construction logs in Appendix A-4.

4.3 INDOOR AMBIENT AIR ASSESSMENT

Indoor ambient air samples were collected within the on-Property building between Sunday evening, April 11, 2010, and Monday morning, April 12, 2010. Indoor air sample collection was initiated approximately four hours after the 2 PM building closure to avoid interference with tenants and reduce the potential for outdoor air to impact indoor air sampling locations. Building windows and doors were kept closed to the extent possible during sample collection.

Indoor air sampling was conducted in accordance with JCO-SOP-063 (The Johnson Company, 2010d); sampling forms are included in Appendix A-5. Indoor air samples are denoted with an "IA" prefix followed by the sub-slab sample location number (e.g., sample IA-01 was collected at location SV-01, shown on Figure 2). Indoor ambient air sampling locations

were co-located with the sub-slab sampling points at all locations except SV-05, SV-07, SV-10, and SV-13. At these locations, USEPA directed that the sub-slab samples be collected approximately five feet away from the crack/joint and the indoor air samples be collected over the crack/joint with the highest recorded PID reading. An ambient air sample also was collected immediately above the sub-slab vapor sampling point at locations SV-10 and SV-13; these samples are labeled IA-10A and IA-13A, respectively. Field replicate samples were collected at locations SV-11 and SV-13 to evaluate field precision. Field replicates were collected simultaneously by placing two 6-Liter passivated canisters side-by-side at the replicate location and opening and closing both flow controllers at the same time.

Samples were collected into individually-certified clean evacuated 6-Liter passivated canisters, each with a pre-calibrated flow controller, provided by Alpha Analytical, Inc. of Mansfield, Massachusetts (Alpha), a National Environmental Laboratory Accreditation Conference (NELAC) (E87814) certified laboratory. Canister and flow controller certification records are provided in Appendix A-5. Upon receipt of the canisters at the Property, a calibrated digital handheld pressure gauge was used to verify each canister's vacuum pressure, and readings were recorded on the sampling forms included in Appendix A-5. Initial flow controller vacuum pressure was also recorded for each canister prior to initiating sample collection.

Sample canisters were elevated to a representative breathing zone exposure height of approximately 50 inches at each indoor air sampling location. Each sample location was screened using a miniRae 3000 PID prior to initiating sample collection; pre-sampling PID readings were recorded on the field forms in Appendix A-5. Samples were collected over an approximately 8-hour period at a target sampling rate of approximately 10 mL/min. Indoor ambient temperature and barometric pressure were recorded at the start and end of sample collection at each location. Indoor ambient temperatures ranged between 59.5 and 65.1 degrees Fahrenheit during the sampling event. Barometric pressure ranged between 764.0 and 767.3 inches of mercury (in Hg) during the sampling event. Sample canisters were closed at a flow controller vacuum gauge reading between -2 to -10 in Hg, to maintain a negative pressure in the canister following sample collection until receipt at the analytical laboratory. Flow controller

vacuum readings recorded at the end of sample collection at each location are shown on the field sampling forms included in Appendix A-5.

Following completion of the indoor air sampling event, sample canisters were moved to the main entrance vestibule outside of the office area until completion of the sub-slab vapor sampling event. Following removal of the canisters from the building on the morning of April 12, 2010, a calibrated digital handheld pressure gauge was used to verify each final canister vacuum pressure; readings were recorded on the sampling forms included in Appendix A-5. All final canister vacuum pressure readings were within the target -2 to -10 in Hg range, except IA-01. The final digital vacuum pressure reading for the IA-01 canister was -0.6 in Hg. Although sample IA-01 does not present a full 8-hour sample, the canister was checked 33 minutes prior to stopping collection, and still had an acceptable vacuum (-4.5 in Hg). Because the digital reading confirmed that a slight negative pressure remained in the canister at end of sampling, the sample was considered valid and sent to the laboratory for analysis. Results from this sample were deemed acceptable because the canister had just reached ambient pressure as sampling was concluded, and the laboratory and field vacuum measurements for the canister exhibited good correlation. A Field Activities Quality Assurance Review report is included in Appendix B and summarized in Section 4.6. Data validation and usability are discussed further in Section 5.0.

4.4 OUTDOOR AMBIENT AIR ASSESSMENT

Outdoor ambient air samples were collected at three locations outside the on-Property building (Figure 2) over the same time interval as the indoor ambient air samples for purposes of correlating outdoor and indoor air quality conditions. Outdoor air sampling was conducted in accordance with JCO-SOP-063 (The Johnson Company, 2010d); sampling forms are included in Appendix A-5. Outdoor air samples are denoted with an "OA" prefix. A field replicate sample was collected at location OA-02 to evaluate field precision. The field replicate was collected by placing two 6-Liter passivated canisters side-by-side at the replicate location and opening and closing both flow controllers at the same time.

Outdoor air sample locations were selected based on the predominant wind direction measured on the day of sampling. Before starting outdoor air sample collection on April 11,

2010, the on-Property wind direction was recorded using a handheld digital anemometer (Speedtech Instruments WindMate 300). Readings were recorded on the field forms included in Appendix A-5. Wind speed and direction measured at 5:15 PM, 5:30 PM, and 5:45 PM were 4-6 miles per hour (mph) at 305 degrees northwest (NW), 3-5 mph at 336 degrees north-northwest (NNW), and 1-3 mph at 340 degrees north-northwest (NNW), respectively. One downwind (OA-01) and two upwind (OA-02 and OA-03) sampling locations were selected, as shown on Figure 2.

Samples were collected into individually-certified clean evacuated 6-Liter passivated canisters, each with a pre-calibrated flow controller, provided by Alpha. Canister and flow controller certification records are provided in Appendix A-5, and the entire data packages are provided in Appendix C. Upon receipt of the canisters, a calibrated digital handheld pressure gauge was used to verify each canister vacuum pressure; readings were recorded on the sampling forms included in Appendix A-5. Initial flow controller vacuum pressure was also recorded for each canister prior to initiating sample collection.

Sample canisters were elevated to a representative breathing zone exposure height of approximately 50 inches at each outdoor air sampling location. Samples were collected over an approximately 8-hour period at a target sampling rate of approximately 10 mL/min. Ambient temperature and barometric pressure were recorded at the start and end of sample collection at each location. Outdoor ambient temperatures ranged between 46.5 and 68.8 degrees Fahrenheit during the sampling event. Barometric pressure ranged between 764.0 and 767.0 in Hg during the sampling event. Sample canisters were closed at a flow controller vacuum gauge reading between -2 to -10 in Hg, to maintain a negative pressure in the canister following sample collection until receipt at the analytical laboratory. Flow controller vacuum readings recorded at the end of sample collection at each location are shown on the field sampling forms included in Appendix A-5. Final outdoor ambient air sampling canister field vacuum measurements were made at the same time and location as for the indoor air sampling canisters. A calibrated digital handheld pressure gauge was used to verify each final canister vacuum pressure; readings are

recorded on the sampling forms included in Appendix A-5. All final canister vacuum pressure readings were within the target -2 to -10 in Hg range.

4.5 SUB-SLAB VAPOR ASSESSMENT

Sub-slab vapor samples SV-01 through SV-15 were collected at the locations shown on Figure 2 on Monday morning, April 12, 2010, following completion of the ambient air sampling and before the 8 AM building opening to avoid interference with tenants and to allow building windows and doors to be kept closed to the extent possible during sample collection.

Sub-slab vapor sampling was conducted in accordance with JCO-SOP-062 (The Johnson Company, 2010d); sampling forms are included in Appendix A-5. Sub-slab vapor samples are denoted with an "SV" prefix followed by the sub-slab sample location number (e.g., sample SV-01 was collected at location SV-01, shown on Figure 2). Per USEPA direction, sub-slab samples SV-05, SV-07, SV-10, and SV-13 were collected approximately five feet away from the nearest crack/joint. Prior to sample collection at each location, the sub-slab sample point was purged for 30 to 35 seconds at a rate of approximately 100 mL/min to remove approximately three internal volumes of the probe and dedicated tubing; purging details are included on the field forms in Appendix A-4. Each sample location was screened during sub-slab canister set-up using a miniRae 3000 PID; pre-sampling PID readings were recorded on the field forms in Appendix A-5.

Samples were collected into individually-certified clean evacuated 6-Liter passivated canisters provided with pre-calibrated flow controllers by Alpha. Canister and flow controller certification records are provided in Appendix A-5. Upon receipt of the canisters at the Property, a calibrated digital handheld pressure gauge was used to verify each canister vacuum pressure; readings were recorded on the sampling forms included in Appendix A-5. Initial flow controller vacuum gauge pressure was also recorded for each canister prior to initiating sample collection. Samples were collected over an approximately 1-hour period at a target sampling rate of approximately 100 mL/min. Field replicate samples were collected at locations SV-11 and SV-13 to evaluate field precision. Field replicates were collected simultaneously from the primary sample location using Teflon-lined tubing from a single vapor sampling probe connected to a tee

splitter and two 6-Liter passivated canisters. Indoor ambient temperature and barometric pressure were recorded at the start of sample collection at most locations. Indoor ambient temperatures ranged between 59.5 and 62.5 degrees Fahrenheit. Barometric pressure ranged between 767.0 and 767.3 in Hg. At all locations except SV-02, sample canisters were closed at a flow controller vacuum gauge reading between -2 to -10 in Hg, to maintain a negative pressure in the canister following sample collection until receipt at the analytical laboratory. Flow controller vacuum readings recorded at the end of sample collection at each location are shown on the field sampling forms included in Appendix A-5. At location SV-02, the sample canister flow controller vacuum reading remained at -20 in Hg after over one hour of sample collection time. Because this was the second sample collection attempt at this location and the facility was opening for business, the sample canister was closed at a vacuum higher (-21.7 in Hg) than the target -10 in Hg and sent to the laboratory for analysis. The elevated vacuum resulted in a slight dilution of the sample but the result was considered valid. Data validation and usability are discussed further in Section 5.0.

Following completion of the sub-slab sampling event, sample canisters were removed from the building and a calibrated digital handheld pressure gauge was used to verify each final canister vacuum pressure; readings were recorded on the sampling forms included in Appendix A-5. All final canister vacuum pressure readings were within the target -2 to -10 in Hg range, except SV-02 and SV-10. The final digital vacuum pressure reading for the SV-02 canister was -21.7 in Hg; the rationale for stopping sample collection at this location at a vacuum higher than the target -10 in Hg was discussed above. The final digital vacuum pressure reading for the SV-10 canister was -1.6 in Hg. Because the digital reading confirmed that a negative pressure remained in the canister at end of sampling, the sample was considered valid and sent to the laboratory for analysis. Data validation and usability are discussed further in Section 5.0.

A trip blank canister accompanied the ambient air and sub-slab vapor sample canisters through the sampling event and subsequent transport to the laboratory. This canister also was used to evaluate potential canister-to-canister carryover resulting from use of the digital handheld pressure gauge. After final canister vacuum pressure had been verified in each sub-slab vapor

sampling canister using the digital gauge, the same measurement was made on the trip blank canister. Analytes detected in the trip blank sample, if any, would represent the maximum carryover that could have been conveyed through use of the handheld digital gauge. Chain-of-custody records for all sample canisters are included in Appendix A-5.

4.6 FIELD ACTIVITIES QUALITY ASSURANCE EVALUATION

A quality assurance (QA) review of field procedures and documentation to identify deviations from the IAQA/VI SOW or QAPP (The Johnson Company, 2010c, d), response actions, and impact to data usability, if any, was conducted by Phoenix Chemistry Services (Phoenix) of North Ferrisburg, Vermont. The Field Activities Quality Assurance Review report is provided in Appendix B. The evaluation of field activities is summarized below.

Field activities were conducted according to the appropriate SOPs. The response to unforeseen circumstances was appropriate, and did not adversely affect data usability. No discernible deviations from sampling SOPs occurred. Measures of precision, accuracy, representativeness, completeness, comparability, and sensitivity were achieved as follows:

- Five sets of field duplicates were properly collected, and provide a usable measure of sample and sampling precision. Results for a single analyte (total xylenes) in one field duplicate pair (IA-13 and IA-DUP01) exceeded precision limits for the Method TO-15 SIM analysis (discussed further in Appendix D).

- The trip blank was properly handled and provides a usable measure of field contamination.

- No other measures of accuracy are included in the field sampling activities for air analyses.

- Site preparation and sampling activities were appropriate, followed all requirements in the SOW and QAPP, and provide acceptable sensitivity to determine the representativeness of the sample results.

- Sampling locations were selected and prepared using appropriate criteria, and PID readings were sufficiently sensitive to identify locations with the highest potential concentrations of target analytes.

- All samples submitted for laboratory analysis met minimum requirements and were appropriately analyzed by the requested methods. Two samples required slight dilutions due to the slightly low volumes collected. One sample was returned to the laboratory at ambient pressure; however, results from this sample were deemed acceptable because the canister had just reached ambient pressure as sampling was concluded, and laboratory and field vacuum measurements exhibited good correlation.

- Sub-slab sampling sites were appropriately sealed following sample collection.

5.0 RESULTS AND DISCUSSION

This section presents results for ambient air and sub-slab vapor samples collected between April 11 and 12, 2010 at the Property. The April 2010 sampling event is the first of two IAQA/VI sampling events to be conducted as described in the IAQA/VI SOW (The Johnson Company, 2010c). These initial results are discussed within the framework of potential human health risk for a current commercial/industrial worker, a current storage unit user, and a hypothetical future resident from short-term or long-term exposure to VOCs detected in indoor air at the on-Property building. The final conclusions of the IAQA/VI assessment will be based on the results from both rounds of IAQA/VI sampling and the results of upcoming groundwater sampling of on-Property water-table wells being conducted as part of the VIA Work Plan (GeoTrans, 2010).

Validated analytical data are presented in Table 3. The laboratory analytical data report is provided in Appendix C. APH compound concentrations in sub-slab vapor and ambient air samples are shown on Figure 6. Concentrations of key chlorinated VOCs in sub-slab vapor and ambient air samples are shown on Figure 7. A summary of the data validation and usability evaluation is presented below, followed by discussion of the ambient air and sub-slab analytical data results.

5.1 DATA VALIDATION AND USABILITY EVALUATION

A Tier III data validation and determination of data usability were conducted by Phoenix using the laboratory data packages included in Appendix C. The data review included proper holding times, proper chain-of-custody documentation, achievement of target reporting limits, acceptable laboratory calibrations and quality control parameters, and representativeness of

replicate results. Data evaluation, assessment, and response actions were described in the approved QAPP (The Johnson Company, 2010d). The data validation report is provided in Appendix D. A table summarizing the laboratory analytical data and quality control results, including revisions and qualifiers, is provided as an Attachment to this report. A summary of the data validation is presented below.

Findings of the validation effort resulted in the following qualifications:

- On the basis of percent difference values in the associated continuing calibration standard exceeding the limit specified in the QAPP, results for trans-1,3-dichloropropene in samples analyzed by Method TO-15 SIM in the analytical windows between 15:57 on 4/21/10 and 11:44 on 4/23/10 were qualified as estimated (UJ).

- On the basis of field contamination, positive results in the APH analysis for C_9-C_{12} aliphatic hydrocarbons greater than the sample-specific (adjusted) quantitation limit (QL) but less than the action limit in samples IA-13, IA-13A, SV-14, and SV-03 were qualified as less than the reported value (U).

- On the basis of field contamination, positive results for PCE in the TO-15 SIM analysis greater than the sample-specific (adjusted) QL but less than the action limit in samples OA-01, OA-03, and OA-DUP01 were qualified as less than the reported value (U).

- On the basis of the unacceptable precision in the field duplicate pair, results in the TO-15 SIM analysis for total xylenes in IA-13 and IA-DUP01 were qualified as estimated (J).

- Results for PCE in SV-07, SV-14, SV-DUP01, SV-13, SV-15, SV-12, SV-05, SV-10, SV-DUP02, SV-09, SV-08, SV-06, and SV-11 were rejected (R) due to detection of this compound outside the linear range of the instrument for method TO-15 SIM. Results for this compound were replaced with the acceptable concentrations from the more diluted analyses of these samples (SV-07DL, SV-14DL, SV-DUP01DL, SV-13DL, SV-15DL, SV-12DL, SV-05DL, SV-10DL, SV-DUP02DL, SV-09DL, SV-08DL, SV-06DL, and SV-11DL).

All positive results are listed in the electronic data deliverable (EDD) included as an Attachment to this report, whether or not the value or qualifier was changed as a result of the

validation. Where no result is listed, the compound was not detected and the reporting limit was not qualified. If the reported result was changed during the validation effort from a positive result to a value representing a concentration not detected at or below, that value is reported as the Result with a Validator Qualifier of "U" or "UJ".

5.2 AMBIENT AIR SAMPLING RESULTS

Indoor air samples were collected at 15 locations in the on-Property building selected to provide comprehensive coverage of the building. Exterior ambient air samples were collected at three outdoor on-Property locations for purposes of correlating outdoor and indoor air quality conditions. Sampling locations are shown on Figure 2. Samples were analyzed for the suite of analytes shown on Table 2 using Modified EPA Method TO-15 SIM and MA APH Method. Target reporting limits and actual laboratory reporting limits for each analyte with at least one non-detect value in an ambient air sample are shown on Table 4; target reporting limits were achieved for all ambient air samples.

Two indoor air samples were collected at each of locations SV-10 and SV-13. Per USEPA direction, the primary sample was collected over the crack/joint with the highest recorded PID reading at each sampling location (samples IA-10 and IA-13, respectively). The second sample was collected immediately above the sub-slab vapor point at each location (samples IA-10A and IA-13A, respectively); sub-slab vapor sampling points were installed approximately five feet away from the crack/joint with the highest recorded PID reading at each of these locations, per USEPA direction. As shown on Table 3, analyte concentrations in the primary and "A" samples showed a high level of correlation. Average relative percent differences (RPD) between analytes in the two samples from each location were less than 10 percent; median RPDs were less than five percent. The high level of correlation for all compounds analyzed between indoor air samples collected over joints at which non-zero PID readings were previously measured and indoor air samples collected approximately five feet away shows that the samples collected over the crack/joint were not impacted by sub-slab vapor more than the sample co-located with the corresponding sub-slab vapor sample location.

Table 4 summarizes maximum and minimum detects for each analyte in the indoor and outdoor air samples. The following analytes were not detected above laboratory reporting limits in any of the indoor air samples collected: 1,2-dibromoethane; bromoform; isopropylbenzene; 1,2-dichloropropane; trans-1,3-dichloropropene; 1,3-dichlorobenzene; bromodichloromethane; chlorobenzene; 1,1,2-trichloroethane; trans-1,2-dichloroethene; vinyl chloride; and C_9-C_{10} aromatic hydrocarbons. Analytes detected in one or more indoor air samples are discussed below.

Detected Petroleum Hydrocarbon Constituents

1,3-Butadiene was detected above the laboratory reporting limit at 12 indoor air sampling locations. It was also detected at similar concentrations in all outdoor air samples; therefore, its presence in indoor air is consistent with ambient air background, not sub-slab vapor intrusion.

With the exception of C_5-C_8 and C_9-C_{12} aliphatic hydrocarbons at locations SV-02 and SV-04, detected concentrations of all APH constituents and 1,2,4-trimethylbenzene (1,2,4-TMB, an aromatic petroleum hydrocarbon included in the TO-15 SIM analysis) in indoor air samples were similar to or higher than detected concentrations in sub-slab vapor samples (as noted above, detection limits in a number of sub-slab samples were elevated due to sample dilution). For example, naphthalene was detected above the laboratory reporting limit in indoor air samples from all locations except IA-09; however, it was detected above the laboratory reporting limit at only one sub-slab vapor location, SV-02, at half the concentration reported in the co-located indoor air sample. Naphthalene is a constituent in moth repellants, which are very likely present in private storage units in the on-Property building.

These data indicate volatilization of materials used and stored in the on-Property building as the source of APH constituents and 1,2,4-TMB in indoor air, not sub-slab vapor intrusion.

Detected Chlorinated VOCs

Chloroform concentrations in indoor air are consistent with volatilization from materials used and stored in the on-Property building, not sub-slab vapor intrusion.

Similar to naphthalene, discussed above, 1,4-dichlorobenzene (1,4-DCB) was detected above the laboratory reporting limit in indoor air samples from all locations; however, it was detected above the laboratory reporting limit at only four sub-slab vapor locations, SV-01 through SV-04, at concentrations one to two orders of magnitude less than those in the co-located indoor air samples. 1,4-DCB is the major constituent in moth repellants, cleaning products, and chemical deodorizers, all of which are very likely present in private storage units in the on-Property building. These data support volatilization from materials used and stored in the on-Property building as the source of 1,4-DCB in indoor air, rather than sub-slab vapor intrusion.

Carbon tetrachloride was detected above laboratory reporting limits at all indoor air sampling locations. It was also detected at similar concentrations in all outdoor air samples; therefore, its presence in indoor air is consistent with ambient air background, not sub-slab vapor intrusion.

Of the remaining chlorinated VOCs detected in one or more indoor air samples, only TCA, PCE, and methylene chloride were detected at concentrations greater than 1 microgram per cubic meter ($\mu g/m^3$). As discussed in Section 5.3, PCE was the predominant chemical detected in sub-slab vapor samples. A preliminary evaluation of potential risk to a current worker/storage unit user and a hypothetical future resident from PCE and other volatile constituents detected in indoor air samples during the April 2010 IAQA/VI sampling event is presented in Section 5.4. Final assessment of potential risk will be based on data from both rounds of indoor air sampling data.

5.3 SUB-SLAB SAMPLING RESULTS

Sub-slab vapor samples were collected at 15 locations in the on-Property building selected to provide comprehensive coverage of the building. Sampling locations are shown on Figure 2. Samples were analyzed for the suite of analytes shown on Table 2 using Modified EPA Method TO-15 SIM and MA APH Method. Target reporting limits and actual, sample-specific laboratory reporting limits for analytes in undiluted sub-slab vapor sample are shown on Table 5. Target reporting limits were achieved for all analytes in non-diluted sub-slab vapor

samples, with the exception of benzene and total xylenes. Reporting limits for these analytes in non-diluted samples were 1.4 and 4.3 times higher, respectively, than the target reporting limits due to laboratory calibration issues, as discussed in Appendix D. Reporting limits for samples SV-05, SV-06, SV-07, SV-09, SV-10, SV-11, SV-12, SV-13, and SV-15 were 10 times higher than target reporting limits because a 10 times dilution of the sample was required due to elevated PCE concentrations. Reporting limits for sample SV-02 were 2.73 times higher than target reporting limits because a 2.73 times dilution of this sample was required due to elevated PCE concentrations. Table 5 also summarizes maximum and minimum detects for each analyte in the sub-slab vapor samples.

The following analytes were not detected above laboratory reporting limits in any of the sub-slab vapor samples collected: 1,2-dibromoethane; bromoform; isopropylbenzene; 1,2-dichloropropane; trans-1,3-dichloropropene; 1,3-dichlorobenzene; 1,1,2-trichloroethane; 1,2-dichloroethane; methylene chloride; vinyl chloride; 1,3-butadiene; and C_9-C_{10} aromatic hydrocarbons.

Detected Petroleum Hydrocarbon Constituents

There is no indication of significant APH impact to sub-slab vapor. Sub-slab vapor concentrations for MTBE, benzene, toluene, ethylbenzene, and xylenes (collectively, BTEX), naphthalene, and 1,2,4-TMB were less than or equivalent to indoor air concentrations, and do not indicate the presence of a sub-slab source to indoor air for these constituents. C_5-C_8 and/or C_9-C_{12} aliphatic hydrocarbons were detected at concentrations between 100 and 500 $\mu g/m^3$ at locations SV-02 and SV-04 only. These low detections are unlikely to be indicative of sub-slab petroleum material in these areas.

Detected Chlorinated VOCs

As discussed in Section 3.0, the predominant chemicals previously detected in soil vapor, soil, and/or groundwater samples collected from on-Property unconsolidated deposits were PCE, TCE, and TCA. Only PCE, TCE, and their breakdown product 1,2-DCE were previously detected in soil vapor samples. The sub-slab vapor sampling results from April 2010 are consistent with previous site data. Only PCE, TCA, TCE, and cis-1,2-DCE were detected in sub-

slab vapor at concentrations greater than 100 $\mu g/m^3$. Other VOC detects in sub-slab vapor were at low concentrations (i.e., less than 20 $\mu g/m^3$).

Detected TCE and cis-1,2-DCE concentrations were significantly lower than PCE concentrations in all sub-slab samples. TCE was not detected above the laboratory reporting limit in sub-slab samples from the western and northwestern portions of the building (SV-01, SV-02, SV-03, SV-04, and SV-14), and cis-1,2-DCE was detected above the laboratory reporting limit only in sub-slab samples in the very eastern portion of the building (SV-11, SV-12, SV-13, and SV-15).

Both PCE and TCA were detected above laboratory reporting limits at all 15 sub-slab vapor sampling locations; however, TCA concentrations were significantly lower than PCE concentrations in all sub-slab samples. PCE and TCA concentrations were generally highest under the eastern portion of the building where elevated concentrations of these constituents were previously measured in soil and groundwater. Sub-slab vapor data are consistent with the presence of impacted groundwater in soil and shallow bedrock beneath the on-Property building. TCA concentrations were highest in samples from sub-slab locations SV-05, SV-06, and SV-12, all located in the southern portion of former Building B. PCE concentrations were highest in samples from sub-slab locations SV-05, SV-06, SV-07, SV-10, and SV-13, all located in the eastern portion of former Building B where IUS maintained a 5000-gallon aboveground PCE tank between 1977 and 1982 (Figure 3). The fill pipe for the tank was located outside Building B, within the former at-grade loading dock at the east end of the building (Figure 3).

PCE concentrations in sub-slab vapor samples are consistent with concentrations that could be generated by volatilization of dissolved PCE from underlying groundwater, based on the magnitude of historic detections of PCE in shallow groundwater in sampling events in 1993 and 1994. For example, using a dimensionless Henry's law coefficient of 0.765 (TRRP, 2006), a PCE concentration in groundwater of approximately 550 micrograms per liter ($\mu g/L$) could generate a theoretical maximum equilibrium soil vapor concentration of 420,000 $\mu g/m^3$ PCE if groundwater was the only source of VOCs to soil vapor. Thus, elevated PCE concentrations in sub-slab vapor do not necessarily indicate the presence of a source in soil beneath the area of

elevated sub-slab vapor concentrations; groundwater may continue to impact soil vapor to observed levels. Because ongoing groundwater extraction from extraction well UC22 has lowered the groundwater table across the Property, and recharge of clean water to unconsolidated deposits underlying the building is believed to have significantly reduced VOC concentrations in shallow groundwater since 1993, more recent groundwater concentrations at the water table under the building and across the Property are required to estimate current potential impacts. Comparison of PCE concentrations in sub-slab vapor samples with current dissolved concentrations in shallow groundwater will support interpretation of the sub-slab vapor data. Collection of shallow groundwater data to evaluate VOC concentrations at the water table beneath the Property was proposed in the IAQA/VI SOW; these data will be collected from up to 23 on-Property monitoring wells as part of the separate VIA Work Plan currently being implemented (GeoTrans, 2010).

PCE concentrations in indoor air samples averaged more than three orders of magnitude lower than concentrations in co-located sub-slab samples; however, the detection of PCE in indoor air samples suggests that a vapor intrusion exposure pathway may exist between sub-slab vapor and indoor air at one or more locations in the on-Property building. Consistent with the IAQA/VI assessment objective that potentially complete exposure pathways to commercial workers be evaluated, a preliminary evaluation of potential risk to a current commercial/industrial worker and a current storage unit user from PCE (and other volatile constituents) detected in indoor air samples during the April 2010 IAQA/VI sampling event is presented in Section 5.4. Final assessment of potentially complete exposure pathways and potential risk to commercial workers will be based on both rounds of indoor air sampling data.

5.4 PRELIMINARY HUMAN HEALTH RISK EVALUATION

Preliminary human health risk calculations were performed by ARCADIS U.S., Inc. (ARCADIS) using the April 2010 indoor air data. Data were compared to acute exposure criteria for estimation of current commercial/industrial worker exposure, current storage unit exposure, and hypothetical future resident exposure. The ARCADIS report and supporting calculations are included as Appendix E. The data evaluation methodology and conclusions are summarized below.

Indoor air data were compared to acute exposure criteria (Acute Minimal Risk Levels and Acute Exposure Guideline Levels) to screen for potential near-term human health hazards. Indoor air data were also compared to occupational criteria, including Permissible Exposure Limits and Threshold Limit Values. If no acute exposure criteria or occupational criteria were available for a given compound, surrogate values were used where appropriate. Comparisons were based on individual samples without averaging of field duplicates (i.e., as if an individual person would consistently remain at the sample location throughout the relevant exposure period). No result exceeded acute exposure or occupational criteria. Thus, acute indoor air exposures to VOCs detected in indoor air would not pose significant risks of harm to human health.

Risks from inhalation of VOCs detected in indoor air were estimated for a current commercial/industrial worker and a current storage unit user for both long- and short-term exposures, and for a hypothetical future resident for long-term exposures. Exposure assumptions were based on current USEPA guidance (USEPA 2009a,b) and building use patterns. In accordance with USEPA guidance, long-term exposure was defined as 25 years for a commercial/industrial worker or storage unit user and 30 years for a hypothetical future resident. The short-term exposure was performed for a five-year exposure in accordance with the MADEP guidance for Imminent Hazard (IH) evaluations to determine if an IH condition existed as defined in the Massachusetts Contingency Plan (MCP) (MADEP, 2008a). As specified in the MCP, the IH evaluation was performed for current use receptors: current commercial/industrial workers and current storage unit users. VOCs in indoor air were not considered to pose significant cumulative risk to human health within or below the USEPA Superfund target excess lifetime cancer risk of $1x10^{-6}$ to $1x10^{-4}$ for potential carcinogenic effects and a target Hazard Index (HI) of 1 for potential noncarcinogenic effects. The criteria applicable to the MADEP IH evaluation are a target excess lifetime cancer risk of $1x10^{-5}$ for potential carcinogenic effects and a target HI of 1 for potential noncarcinogenic effects.

Exposure areas considered included individual sampling locations, the west warehouse (average of samples IA-01, IA-02, IA-03, and IA-09), the east warehouse (average of samples

IA-04 through IA-08 and IA-10 through IA-14), and the entire warehouse (locations for west and east warehouse combined). A current receptor was assumed to be present in the warehouse areas for 3 hours per day (hr/day) as a storage unit user; in the office or warehouse for 8 hr/day as a commercial/industrial worker; in the pump room for 4 hours per week as a commercial/industrial worker; and in the bathroom for 1 hr/day as a commercial/industrial worker or storage unit user. Hypothetical future residents were assumed to be present 24 hr/day in any area of the building.

Cumulative estimated carcinogenic and noncarcinogenic risks for current commercial/industrial workers and storage unit users did not exceed target risk levels for a short-term (5 year) exposure period. No IH condition as defined by the MCP was found to exist at 15 Olympia Avenue, Woburn, MA. Estimated excess lifetime carcinogenic risks for these current land use receptors for a long-term (25 year) exposure period were within the Superfund target excess lifetime cancer risk range of $1x10^{-6}$ to $1x10^{-4}$ at all locations, and no samples exceeded $1x10^{-4}$. At several locations excess lifetime cancer risks exceed the midpoint of the Superfund risk range, $1x10^{-5}$. VOCs contributing to cumulative risk were PCE, naphthalene (a constituent in moth repellents and fuels) and 1,4-dichlorobenzene (a constituent in moth repellents, cleaning products, and room deodorizers). Both naphthalene and 1,4-dichlorobenzene are VOCs likely present in indoor air as a result of volatilization from materials used and stored in the on-Property building, and not sub-slab vapor intrusion. When the risk assessment was executed for just PCE to determine its role in posing estimated risks to receptors who might breathe PCE in indoor air, all samples were within the Superfund risk range of $1x10^{-6}$ to $1x10^{-4}$, and none exceeded $1x10^{-4}$. Only three locations in the southeastern area of the building (SV-06, SV-12, and SV-13 areas) out of a total of 15 locations sampled in the building exceeded a $1x10^{-5}$ estimated excess lifetime cancer risk for the long-term exposure period, which is the midpoint of the Superfund risk range.

Despite the fact that it is not reasonably anticipated that this building might be used for residential purposes in the future, the hypothetical future residential use scenario was evaluated. Cumulative carcinogenic and noncarcinogenic risks for hypothetical future residents for long-

term (30 year) exposure periods exceeded the Superfund target risk range in several exposure areas.

6.0 SUMMARY AND CONCLUSIONS

The April 2010 sampling event is the first of two IAQA/VI sampling events to be conducted as part of the approved IAQA/VI SOW (The Johnson Company, 2010c). Initial results are discussed within the framework of potential human health risk for a current commercial/industrial worker, a current storage unit user, and a hypothetical future resident from short-term or long-term exposure to VOCs detected in indoor air at the on-Property building. The final conclusions of the IAQA/VI assessment will be based on the results from both rounds of IAQA/VI sampling and the results of upcoming groundwater sampling of on-Property water table wells being conducted as part of the VIA Work Plan (GeoTrans, 2010).

The objectives of the approved IAQA/VI SOW were to:

- determine if vapor intrusion exposure pathways exist;
- collect sufficient data to evaluate any complete exposure pathways to commercial workers;
- evaluate the potential for sub-slab vapors to present an indoor air risk in the on-Property building; and
- use the data collected during this IAQA/VI to determine what, if any, mitigation measures may be appropriate.

PCE was the only potentially site-related VOC detected in indoor air samples at a concentration significantly above either ambient background or common residential air concentrations (USEPA, 2008). Elevated PCE concentrations also were detected in sub-slab vapor samples. Detection of PCE in indoor air samples suggests that a vapor intrusion exposure pathway may exist between sub-slab vapor and indoor air at one or more locations in the on-Property building. Preliminary human health risk calculations were performed by ARCADIS using the April 2010 indoor air data. VOC concentrations in indoor air did not exceed acute exposure criteria or occupational criteria, and acute indoor air exposures to VOCs detected in indoor air were not estimated to pose significant risks to human health. Cumulative estimated carcinogenic and noncarcinogenic risks for current commercial/industrial workers and storage

unit users did not exceed target risk levels for a short-term (5 year) exposure period. No IH condition as defined by the MCP was found to exist at the Property.

Estimated excess lifetime carcinogenic risks for these current land use receptors for a long-term (25 year) exposure period are within the Superfund target excess lifetime cancer risk range of $1x10^{-6}$ to $1x10^{-4}$ at all locations, and no samples exceeded $1x10^{-4}$. At several locations excess lifetime cancer risks exceeded the midpoint of the Superfund risk range, $1x10^{-5}$. Final assessment of potentially complete exposure pathways and exposure risk to commercial/industrial workers and storage unit users will be based on data from both rounds of indoor air sampling.

Elevated PCE concentrations of chlorinated VOCs, including PCE and TCA, were detected in sub-slab vapor samples. Sub-slab vapor concentrations of chlorinated VOCs are generally highest under the eastern portion of the building, where elevated concentrations of these compounds were measured in soil and groundwater in earlier environmental assessment activities. There is no indication of significant APH impacts to sub-slab vapor.

Sub-slab vapor data are consistent with the presence of impacted groundwater in soil and shallow bedrock beneath the on-Property building. TCA concentrations were highest in samples from sub-slab locations in the southern portion of former Building B. PCE concentrations were highest in samples from sub-slab locations in the eastern portion of former Building B, where IUS maintained a 5000-gallon PCE tank between 1977 and 1982. PCE concentrations in sub-slab vapor samples are consistent with concentrations that could be generated by volatilization of dissolved PCE from underlying groundwater. Thus, elevated PCE concentrations in sub-slab vapor do not necessarily indicate the presence of a source in soil beneath the area of elevated sub-slab vapor concentrations. Comparison of PCE concentrations in sub-slab vapor samples with current dissolved concentrations in shallow groundwater will support interpretation of the sub-slab vapor data. Collection of shallow groundwater data from up to 23 on-Property monitoring wells to evaluate VOC concentrations at the water table beneath the Property will be conducted as part of the VIA Work currently being implemented.

Despite the fact that it is not reasonably anticipated that this building might be used for residential purposes in the future, the hypothetical future residential use scenario was evaluated. Cumulative carcinogenic and noncarcinogenic risks for hypothetical future residents for long-term (30 year) exposure periods on the Property exceeded the Superfund target risk range in several exposure areas.

Evaluation of any future response actions or mitigation measures will be based on the results of both rounds of IAQA/VI sampling and the upcoming groundwater sampling at on-Property water table wells. This evaluation will be presented in the final IAQA/VI assessment report, to be submitted to USEPA following collection, validation, and review of the sampling data from the second and final IAQA/VI sampling event. To characterize worst-case potential for sub-slab vapors to present indoor air risks in the on-Property building, it is proposed that the second IAQA/VI sampling round be completed during the winter heating season, in either January or February 2011.

7.0 RECOMMENDATIONS

The following recommendations are based on the preceding evaluation of the April 2010 IAQA/VI sampling event data and the objectives of the IAQA/VI:

- The second IAQA/VI sampling round be completed during the winter heating season, in either January or February 2011, to best characterize the potential for sub-slab vapors to present an indoor air risk in the on-Property building.

- APH carbon-range fractions (C_5-C_8 aliphatics, C_9-C_{12} aliphatics, and C_9-C_{10} aromatics) and APH constituents 1,3-butadiene, MTBE, and BTEX be removed from the analyte list for the next sampling round. The April 2010 data showed no indication of significant impact to sub-slab vapor or indoor air from APH carbon-range fractions, 1,3-butadiene, MTBE, or BTEX.

- APH constituent toluene and naphthalene be analyzed using only the Modified EPA Method TO-15 with SIM in the next sampling round (i.e., not be analyzed using MA APH Method).

- Evaluation of future response actions or mitigation measures for sub-slab vapor be based on the results of both rounds of IAQA/VI sampling and the upcoming groundwater sampling at on-Property water table wells.

8.0 REFERENCES

Alliance Technologies Corporation, 1986. Wells G and H Remedial Investigation, Part II, Final Report, prepared for U.S. Environmental Protection Agency, Office of Waste Programs Enforcement, November.

Applied Groundwater Research, Ltd. and Environmental Project Control, Inc., 1994. Summary of Unconsolidated-Deposits Investigation at the UniFirst Property, Woburn, Massachusetts, September.

GeoTrans, 2010, Vapor Intrusion Assessment Work Plan, Revision 1, and Quality Assurance Project Plan for Vapor Intrusion Assessment, Wells G&H Superfund Site, Woburn, Massachusetts, March 25.

Harvard Project Services LLC, 2009. Letter to Joseph LeMay, Responses to EPA's November 30, 2009 Email Questions, January 8.

Massachusetts Department of Environmental Protection (MADEP), 2008a. Massachusetts Department of Environmental Protection: Bureau of Waste Site Cleanup, Massachusetts Contingency Plan, 310 CMR 40.0000, February.

Texas Risk Reduction Program (TRRP), 2006. Updates to the Tables Accompanying the Texas Risk Reduction Program (TRRP) Rule. http://www.tceq.state.tx.us/assets /public/remediation/trrp/trrptoxchph_2006.xls.

The Johnson Company, 2009, Indoor Air Quality and Vapor Intrusion Assessment Work Plan, UniFirst Property, Wells G&H Superfund Property, October 9.

The Johnson Company, 2010a, Indoor Air Quality and Vapor Intrusion Assessment Work Plan, Revision 1, UniFirst Property, Wells G&H Superfund Property, February 17.

The Johnson Company, 2010b, Quality Assurance Project Plan, Revision 0, Indoor Air Quality and Vapor Intrusion Assessment, UniFirst Property, Wells G&H Superfund Property, February 17.

The Johnson Company, 2010c, Indoor Air Quality and Vapor Intrusion Assessment Work Plan, Revision 2, UniFirst Property, Wells G&H Superfund Property, March 25.

The Johnson Company, 2010d, Quality Assurance Project Plan, Revision 1, Indoor Air Quality and Vapor Intrusion Assessment, UniFirst Property, Wells G&H Superfund Property, March 25.

United States Environmental Protection Agency (USEPA), 2002. OSWER Draft Guidance for Evaluating the Vapor Intrusion to Indoor Air Pathway from Groundwater and Soils (Subsurface Vapor Intrusion Guidance), EPA530-D-02-004, November 29.

USEPA, 2009a. Exposure Factors Handbook: 2009 Update. Office of Research and Development, National Center for Environmental Assessment. EPA/600/R-09/052A. July.

USEPA, 2008. Background Indoor Air Concentrations of Volatile Organic Compounds in North American Residences, Literature Review & Implications for Vapor Intrusion Assessment, Helen Dawson, Ph.D., Vapor Intrusion Workshop – AEHS, San Diego, CA, Spring.

USEPA, 2009b. Risk Assessment Guidance for Superfund, Volume I: Human Health Evaluation Manual (Part F, Supplemental Guidance for Inhalation Risk Assessment). Office of Superfund Remediation and Technology Innovation. EPA-540-R-070-002. January.

Water Waste & Land, Inc., ENSR Consulting & Engineering, Gradient Corporation, Environmental Project Control, Inc., 1992. Pre-Design Work Plan Remedial Design and Remedial Action for the Unconsolidated Deposits beneath the UniFirst Property, Wells G&H Site Woburn, Massachusetts, November 13.

K:\1-2114-2\EPA Response 2009\Soil Vapor Response\IAQA Report of Results June 2010\UniFirst IAQA VI Report of Results 061810.docx

TABLES

Table 1
April 2010 Depth to Water-Table Measurements
UniFirst Property
Woburn, Massachusetts

Well [1]	Measurement Date	Measuring Point Elevation (feet msl)	Ground Surface Elevation (feet msl)	Top of Screen Elevation (feet msl)	Bottom of Screen Elevation (feet msl)	Depth to Water (feet btc)	Water Level Elevation (feet msl)	Water Level Elevation (feet bgs)	Formation Screened
UC5	4/12/2010	72.75	73.0	64.00	54.00	9.74	63.01	10.0	UD/SHB
UC6S	4/12/2010	67.36	67.5	59.50	49.50	6.95	60.41	7.1	UD
UC10S	4/12/2010	69.48	69.6	59.60	49.60	7.01	62.47	7.1	UD
UC19S	4/12/2010	70.77	70.9	64.40	54.40	5.42	65.35	5.5	UD
UC24S	4/12/2010	69.77	69.9	60.90	50.90	8.97	60.80	9.1	UD
UC25	4/12/2010	71.73	71.9	66.40	56.40	6.08	65.65	6.3	UD
UC26S	4/12/2010	68.86	69.2	60.19	53.39	6.42	62.44	6.8	UD
UC29S	4/12/2010	70.55	70.8	60.82	54.02	NM	NM	NM	UD

Abbreviations:
bgs= below ground surface
btc= below top of casing (measuring point)
msl = above mean sea level
NM = not measured; well could not be accessed
SHB = shallow bedrock
UD = unconsolidated desposits

Note:
1. Monitoring well locations shown on Figure 3.

Table 2 Analyte List for Sub-Slab Vapor and Ambient Air Sampling – April 2010 UniFirst Property Woburn, Massachusetts		
Analyte	**Analytical Method[1]**	**Laboratory Target Reporting Limit**
Chloroform	TO-15 SIM	0.098 $\mu g/m^3$
1,1-Dichloroethane	TO-15 SIM	0.081 $\mu g/m^3$
1,2-Dichloroethane	TO-15 SIM	0.081 $\mu g/m^3$
1,1-Dichloroethene	TO-15 SIM	0.079 $\mu g/m^3$
Tetrachloroethene	TO-15 SIM	0.136 $\mu g/m^3$
Trichloroethene	TO-15 SIM	0.107 $\mu g/m^3$
Vinyl chloride	TO-15 SIM	0.051 $\mu g/m^3$
trans-1,2-Dichloroethene	TO-15 SIM	0.079 $\mu g/m^3$
cis-1,2-Dichloroethene	TO-15 SIM	0.079 $\mu g/m^3$
1,1,1-Trichloroethane	TO-15 SIM	0.109 $\mu g/m^3$
Methylene chloride	TO-15 SIM	1.740 $\mu g/m^3$
Carbon tetrachloride	TO-15 SIM	0.126 $\mu g/m^3$
Xylenes	TO-15 SIM	0.060 $\mu g/m^3$
Toluene	TO-15SIM	0.188 $\mu g/m^3$
1,2-Dibromoethane (EDB)	TO-15 SIM	0.154 $\mu g/m^3$
Benzene	TO-15 SIM	0.223 $\mu g/m^3$
Bromoform	TO-15 SIM	0.207 $\mu g/m^3$
Ethylbenzene	TO-15 SIM	0.087 $\mu g/m^3$
Isopropylbenzene (Cumene)	TO-15 SIM	2.460 $\mu g/m^3$
trans-1,3-Dichloropropene	TO-15 SIM	0.091 $\mu g/m^3$
Naphthalene	TO-15 SIM	0.262 $\mu g/m^3$
1,3-Butadiene	TO-15 SIM	0.044 $\mu g/m^3$
Methyl tert-butyl ether (MTBE)	TO-15 SIM	0.072 $\mu g/m^3$
1,1,2-Trichloroethane	TO-15 SIM	0.109 $\mu g/m^3$
1,2,4-Trimethylbenzene	TO-15 SIM	0.098 $\mu g/m^3$
1,2-Dichloropropane	TO-15 SIM	0.092 $\mu g/m^3$
1,3-Dichlorobenzene	TO-15 SIM	0.120 $\mu g/m^3$
1,4-Dichlorobenzene	TO-15 SIM	0.120 $\mu g/m^3$
Bromodichloromethane	TO-15 SIM	0.134 $\mu g/m^3$
Chlorobenzene	TO-15 SIM	0.092 $\mu g/m^3$
C5-C8 Aliphatic Hydrocarbons	MA APH	12 $\mu g/m^3$
C9-C12 Aliphatic Hydrocarbons	MA APH	14 $\mu g/m^3$
C9-C10 Aromatic Hydrocarbons	MA APH	10 $\mu g/m^3$

Note:
[1] Samples were analyzed using Modified EPA Method TO-15 with Selective Ion Monitoring (SIM) and Massachusetts Air-Phase Petroleum Hydrocarbons (MA APH) Method to achieve laboratory target reporting limits where possible.

Table 3
Analytical Results for Ambient Air and Sub-Slab Vapor Samples – April 2010
UniFirst Property
Woburn, Massachusetts

LOCATION		IA-01		SV-01		IA-02		SV-02		IA-03		SV-03	
SAMPLING DATE		4/12/2010		4/12/2010		4/12/2010		4/12/2010		4/12/2010		4/12/2010	
LAB SAMPLE ID		L1005229-19		L1005229-36		L1005229-24		L1005229-40		L1005229-22		L1005229-29	
	Units		Qual		Qual		Qual		Qual		Qual		Qual
Petroleum Hydrocarbons in Air by TO-15 SIM													
1,3-Butadiene	ug/m3	0.044	U	0.044	U	0.053		0.121	U	0.044		0.044	U
Methyl tert butyl ether	ug/m3	0.396		0.072	U	0.45		0.256		0.443		0.072	U
Benzene	ug/m3	0.728		0.319	U	0.9		0.872		0.862		0.319	U
Toluene	ug/m3	5.86		0.516		6.18		3.11		8.77		0.264	
Ethylbenzene	ug/m3	0.859		0.087	U	0.859		0.534		0.889		0.087	U
Xylenes, Total	ug/m3	2.99		0.373		2.97		2.88		3.22		0.26	U
Naphthalene	ug/m3	2.3		0.26	U	2.19		1.06		2.1		0.26	U
Petroleum Hydrocarbons in Air by MA APH													
C5-C8 Aliphatics, Adjusted	ug/m3	58		22		66		120		61		13	
C9-C12 Aliphatics, Adjusted	ug/m3	87		58		83		490		61		20	U
C9-C10 Aromatics	ug/m3	10	U	10	U	10	U	27	U	10	U	10	U
Volatile Organics in Air by TO-15 SIM													
1,1,1-Trichloroethane	ug/m3	0.251		0.234		0.3		0.67		0.294		0.681	
1,1,2-Trichloroethane	ug/m3	0.109	U	0.109	U	0.109	U	0.298	U	0.109	U	0.109	U
1,1-Dichloroethane	ug/m3	0.081	U	0.081	U	0.081	U	0.221	U	0.081	U	0.081	U
1,1-Dichloroethene	ug/m3	0.079	U	0.079	U	0.079	U	0.216	U	0.079	U	0.079	U
1,2,4-Trimethylbenzene	ug/m3	1.22		0.098	U	1.12		0.832		1.13		0.098	U
1,2-Dibromoethane	ug/m3	0.077	U	0.077	U	0.077	U	0.21	U	0.077	U	0.077	U
1,2-Dichloroethane	ug/m3	0.554		0.081	U	0.607		0.221	U	0.651		0.081	U
1,2-Dichloropropane	ug/m3	0.092	U	0.092	U	0.092	U	0.252	U	0.092	U	0.092	U
1,3-Dichlorobenzene	ug/m3	0.12	U	0.12	U	0.12	U	0.328	U	0.12	U	0.12	U
1,4-Dichlorobenzene	ug/m3	36		0.342		40.1		1.15		15.8		0.234	
Bromodichloromethane	ug/m3	0.067	U	0.067	U	0.067	U	0.183	U	0.067	U	0.067	U
Bromoform	ug/m3	0.206	U	0.206	U	0.206	U	0.564	U	0.206	U	0.206	U
Carbon tetrachloride	ug/m3	0.459		0.126	U	0.484		0.344	U	0.408		0.126	U
Chlorobenzene	ug/m3	0.092	U	0.092	U	0.092	U	0.251	U	0.092	U	0.092	U
Chloroform	ug/m3	0.215		0.854		0.263		1		0.176		0.098	U
cis-1,2-Dichloroethene	ug/m3	0.079	U	0.079	U	0.079	U	0.216	U	0.079	U	0.079	U
Methylene chloride	ug/m3	3.6		1.74	U	3.68		4.74	U	2.72		1.74	U
Tetrachloroethene	ug/m3	4.36		68		4.34		923		8.75		255	
trans-1,2-Dichloroethene	ug/m3	0.079	U	0.079	U	0.079	U	0.216	U	0.079	U	0.079	U
trans-1,3-Dichloropropene	ug/m3	0.091	U	0.091	UJ	0.091	UJ	0.248	UJ	0.091	UJ	0.091	UJ
Trichloroethene	ug/m3	0.107	U	0.107	U	0.107	U	0.293	U	0.113		0.107	U
Vinyl chloride	ug/m3	0.051	U	0.051	U	0.051	U	0.14	U	0.051	U	0.051	U
Isopropylbenzene	ug/m3	2.46	U	2.46	U	2.46	U	6.71	U	2.46	U	2.46	U

Abbreviations:
MA APH = Massachusetts Air-Phase Petroleum Hydrocarbons Method.
Qual = Data qualifier.
TO-15 SIM = Modified U.S. Environmental Protection Agency Method TO-15 with Selective Ion Monitoring.
U = Not detected at the reported detection limit for the sample.

Table 3
Analytical Results for Ambient Air and Sub-Slab Vapor Samples – April 2010
UniFirst Property
Woburn, Massachusetts

LOCATION SAMPLING DATE LAB SAMPLE ID	Units	IA-04 4/12/2010 L1005229-02	Qual	SV-04 4/12/2010 L1005229-25	Qual	IA-05 4/12/2010 L1005229-10	Qual	SV-05 4/12/2010 L1005229-32	Qual	IA-06 4/12/2010 L1005229-16	Qual	SV-06 4/12/2010 L1005229-39	Qual
Petroleum Hydrocarbons in Air by TO-15 SIM													
1,3-Butadiene	ug/m3	0.046		0.044	U	0.097		0.442	U	0.066		0.442	U
Methyl tert butyl ether	ug/m3	0.439		0.072	U	0.166		0.72	U	0.148		0.72	U
Benzene	ug/m3	0.903		0.319	U	1.14		3.19	U	1.18		3.19	U
Toluene	ug/m3	19.6		0.376		7.56		1.88	U	9.02		1.88	U
Ethylbenzene	ug/m3	1.14		0.087	U	1.01		0.868	U	0.811		0.868	U
Xylenes, Total	ug/m3	4.32		0.26	U	4.02		2.6	U	3.09		2.6	U
Naphthalene	ug/m3	4.18		0.26	U	1.17		2.62	U	3.49		2.62	U
Petroleum Hydrocarbons in Air by MA APH													
C5-C8 Aliphatics, Adjusted	ug/m3	66		20		44		120	U	51		120	U
C9-C12 Aliphatics, Adjusted	ug/m3	73		300		28		140	U	29		140	U
C9-C10 Aromatics	ug/m3	10	U	10	U	10	U	100	U	10	U	100	U
Volatile Organics in Air by TO-15 SIM													
1,1,1-Trichloroethane	ug/m3	0.294		5.45		0.218		920		0.425		1440	
1,1,2-Trichloroethane	ug/m3	0.109	U	0.109	U	0.109	U	1.09	U	0.109	U	1.09	U
1,1-Dichloroethane	ug/m3	0.081	U	0.081	U	0.081	U	0.809	U	0.081	U	0.809	
1,1-Dichloroethene	ug/m3	0.079	U	0.079	U	0.079	U	0.792	U	0.079	U	0.872	
1,2,4-Trimethylbenzene	ug/m3	1.6		0.108		1.02		0.982	U	1.04		1.67	
1,2-Dibromoethane	ug/m3	0.077	U	0.077	U	0.077	U	0.768	U	0.077	U	0.768	U
1,2-Dichloroethane	ug/m3	0.833		0.081	U	0.356		0.809	U	0.562		0.809	U
1,2-Dichloropropane	ug/m3	0.092	U	0.092	U	0.092	U	0.924	U	0.092	U	0.924	U
1,3-Dichlorobenzene	ug/m3	0.12	U	0.12	U	0.12	U	1.2	U	0.12	U	1.2	U
1,4-Dichlorobenzene	ug/m3	11.6		0.186		1.43		1.2	U	2.35		1.2	U
Bromodichloromethane	ug/m3	0.067	U	0.067	U	0.067	U	0.67	U	0.067	U	0.67	U
Bromoform	ug/m3	0.206	U	0.206	U	0.206	U	2.06	U	0.206	U	2.06	U
Carbon tetrachloride	ug/m3	0.421		0.214		0.402		1.26	U	0.453		1.26	U
Chlorobenzene	ug/m3	0.092	U	0.092	U	0.092	U	0.92	U	0.092	U	1.52	
Chloroform	ug/m3	0.161		0.098	U	0.151		1.22		0.161		16.6	
cis-1,2-Dichloroethene	ug/m3	0.079	U	0.079	U	0.079	U	0.792	U	0.079	U	0.792	U
Methylene chloride	ug/m3	2.48		1.74	U	1.74	U	17.4	U	1.74	U	17.4	U
Tetrachloroethene	ug/m3	19.1		201		9.83		203000		36.9		420000	
trans-1,2-Dichloroethene	ug/m3	0.079	U	0.079	U	0.079	U	0.792	U	0.079	U	0.792	U
trans-1,3-Dichloropropene	ug/m3	0.091	U	0.091	UJ	0.091	U	0.907	UJ	0.091	U	0.907	UJ
Trichloroethene	ug/m3	0.161		0.107	U	0.118		7.2		0.231		522	
Vinyl chloride	ug/m3	0.051	U	0.051	U	0.051	U	0.511	U	0.051	U	0.511	U
Isopropylbenzene	ug/m3	2.46	U	2.46	U	2.46	U	24.6	U	2.46	U	24.6	U

Abbreviations:
MA APH = Massachusetts Air-Phase Petroleum Hydrocarbons Method.
Qual = Data qualifier.
TO-15 SIM = Modified U.S. Environmental Protection Agency Method TO
U = Not detected at the reported detection limit for the sample.

Table 3
Analytical Results for Ambient Air and Sub-Slab Vapor Samples – April 2010
UniFirst Property
Woburn, Massachusetts

LOCATION SAMPLING DATE LAB SAMPLE ID	Units	IA-07 4/12/2010 L1005229-23	Qual	SV-07 4/12/2010 L1005229-12	Qual	IA-08 4/12/2010 L1005229-09	Qual	SV-08 4/12/2010 L1005229-37	Qual	IA-09 4/12/2010 L1005229-08	Qual	SV-09 4/12/2010 L1005229-35	Qual
Petroleum Hydrocarbons in Air by TO-15 SIM													
1,3-Butadiene	ug/m3	0.062		0.442	U	0.055		0.044	U	0.11		0.442	U
Methyl tert butyl ether	ug/m3	0.198		0.72	U	0.263		0.072	U	1.02		0.72	U
Benzene	ug/m3	0.993		3.19	U	1.11		0.319	U	1.43		3.19	U
Toluene	ug/m3	10.7		1.88	U	9.75		0.32		8.46		1.88	U
Ethylbenzene	ug/m3	0.82		0.868	U	1.53		0.087	U	1.08		0.868	U
Xylenes, Total	ug/m3	3.06		2.6	U	5.37		0.26	U	3.64		2.6	U
Naphthalene	ug/m3	4.3		2.62	U	1.93		0.26	U	0.26	U	2.62	U
Petroleum Hydrocarbons in Air by MA APH													
C5-C8 Aliphatics, Adjusted	ug/m3	46		120	U	87		46		70		120	U
C9-C12 Aliphatics, Adjusted	ug/m3	32		140	U	69		86		14	U	140	U
C9-C10 Aromatics	ug/m3	10	U	100	U	10	U	10	U	10	U	100	U
Volatile Organics in Air by TO-15 SIM													
1,1,1-Trichloroethane	ug/m3	0.491		280		0.229		2.84		0.142		33.2	
1,1,2-Trichloroethane	ug/m3	0.109	U	1.09	U	0.109	U	0.109	U	0.109	U	1.09	U
1,1-Dichloroethane	ug/m3	0.081	U	3.52		0.081	U	0.081	U	0.081	U	0.809	U
1,1-Dichloroethene	ug/m3	0.079	U	0.792	U	0.079	U	0.079	U	0.079	U	0.792	U
1,2,4-Trimethylbenzene	ug/m3	0.958		0.982	U	1.19		0.098	U	0.413		0.982	U
1,2-Dibromoethane	ug/m3	0.077	U	0.768	U	0.077	U	0.077	U	0.077	U	0.768	U
1,2-Dichloroethane	ug/m3	0.663		0.809	U	0.481		0.081	U	0.243		0.809	U
1,2-Dichloropropane	ug/m3	0.092	U	0.924	U	0.092	U	0.092	U	0.092	U	0.924	U
1,3-Dichlorobenzene	ug/m3	0.12	U	1.2	U	0.12	U	0.12	U	0.12	U	1.2	U
1,4-Dichlorobenzene	ug/m3	3.75		1.2	U	4.11		0.12	U	0.378		1.2	U
Bromodichloromethane	ug/m3	0.067	U	0.67	U	0.067	U	0.074	J	0.067	U	0.67	U
Bromoform	ug/m3	0.206	U	2.06	U	0.206	U	0.206	U	0.206	U	2.06	U
Carbon tetrachloride	ug/m3	0.421		1.26	U	0.49		0.283		0.415		1.26	U
Chlorobenzene	ug/m3	0.092	U	0.92	U	0.092	U	0.092	U	0.092	U	0.92	U
Chloroform	ug/m3	0.151		2.58		0.22		7.74		0.195		0.976	U
cis-1,2-Dichloroethene	ug/m3	0.111		0.792	U	0.079	U	0.079	U	0.079	U	0.792	U
Methylene chloride	ug/m3	1.74		17.4	U	1.74	U	1.74	U	1.74	U	17.4	U
Tetrachloroethene	ug/m3	29.9		169000		15.3		3920		4.36		25100	
trans-1,2-Dichloroethene	ug/m3	0.079	U	0.792	U	0.079	U	0.079	U	0.079	U	0.792	U
trans-1,3-Dichloropropene	ug/m3	0.091	UJ	0.907	UJ	0.091	U	0.091	UJ	0.091	U	0.907	UJ
Trichloroethene	ug/m3	0.322		13.9		0.14		0.247		0.113		4.51	
Vinyl chloride	ug/m3	0.051	U	0.511	U	0.051	U	0.051	U	0.051	U	0.511	U
Isopropylbenzene	ug/m3	2.46	U	24.6	U	2.46	U	2.46	U	2.46	U	24.6	U

Abbreviations:
MA APH = Massachusetts Air-Phase Petroleum Hydrocarbons Method.
Qual = Data qualifier.
TO-15 SIM = Modified U.S. Environmental Protection Agency Method TO
U = Not detected at the reported detection limit for the sample.

Table 3
Analytical Results for Ambient Air and Sub-Slab Vapor Samples – April 2010
UniFirst Property
Woburn, Massachusetts

LOCATION SAMPLING DATE LAB SAMPLE ID	Units	IA-10 4/12/2010 L1005229-21	Qual	SV-10 4/12/2010 L1005229-33	Qual	IA-10A 4/12/2010 L1005229-05	Qual	IA-11 4/12/2010 L1005229-06	Qual	IA-11DUP 4/12/2010 L1005229-07	Qual	SV-11 4/12/2010 L1005229-41	Qual
Petroleum Hydrocarbons in Air by TO-15 SIM													
1,3-Butadiene	ug/m3	0.044	U	0.442	U	0.044	U	0.1		0.086		0.442	U
Methyl tert butyl ether	ug/m3	0.248		0.72	U	0.266		0.072	U	0.072	U	0.72	U
Benzene	ug/m3	0.862		3.19	U	0.906		0.795		0.82		3.19	U
Toluene	ug/m3	11.9		1.88	U	12.9		2.96		2.52		1.88	U
Ethylbenzene	ug/m3	0.803		0.868	U	0.95		0.482		0.395		0.868	U
Xylenes, Total	ug/m3	2.97		2.6	U	3.52		1.78		1.4		2.6	U
Naphthalene	ug/m3	4.3		2.62	U	5.91		1.38		0.822		2.62	U
Petroleum Hydrocarbons in Air by MA APH													
C5-C8 Aliphatics, Adjusted	ug/m3	52		120	U	55		17		17		120	U
C9-C12 Aliphatics, Adjusted	ug/m3	39		140	U	47		14	U	14	U	140	U
C9-C10 Aromatics	ug/m3	10	U	100	U	10	U	10	U	10	U	100	U
Volatile Organics in Air by TO-15 SIM													
1,1,1-Trichloroethane	ug/m3	0.371		265		0.382		0.763		0.774		85.8	
1,1,2-Trichloroethane	ug/m3	0.109	U	1.09	U	0.109	U	0.109	U	0.109	U	1.09	U
1,1-Dichloroethane	ug/m3	0.081	U	1.54		0.081	U	0.081	U	0.081	U	1.38	
1,1-Dichloroethene	ug/m3	0.079	U	0.792	U	0.079	U	0.079	U	0.079	U	0.792	U
1,2,4-Trimethylbenzene	ug/m3	1.1		0.982	U	1.33		0.452		0.334		0.982	U
1,2-Dibromoethane	ug/m3	0.077	U	0.768	U	0.077	U	0.077	U	0.077	U	0.768	U
1,2-Dichloroethane	ug/m3	0.833		0.809	U	0.874		0.138		0.133		0.809	U
1,2-Dichloropropane	ug/m3	0.092	U	0.924	U	0.092	U	0.092	U	0.092	U	0.924	U
1,3-Dichlorobenzene	ug/m3	0.12	U	1.2	U	0.12	U	0.12	U	0.12	U	1.2	U
1,4-Dichlorobenzene	ug/m3	6.08		1.2	U	6.72		0.33		0.258		1.2	U
Bromodichloromethane	ug/m3	0.067	U	0.67	U	0.067	U	0.067	U	0.067	U	0.67	U
Bromoform	ug/m3	0.206	U	2.06	U	0.206	U	0.206	U	0.206	U	2.06	U
Carbon tetrachloride	ug/m3	0.44		1.26	U	0.415		0.415		0.465		1.26	U
Chlorobenzene	ug/m3	0.092	U	0.92	U	0.092	U	0.092	U	0.092	U	0.92	U
Chloroform	ug/m3	0.141		9.02		0.146		0.141		0.146		1.46	
cis-1,2-Dichloroethene	ug/m3	0.095		0.792	U	0.103		0.17		0.146		248	
Methylene chloride	ug/m3	3.82		17.4	U	1.74		1.74	U	1.74	U	17.4	U
Tetrachloroethene	ug/m3	28		214000		33.5		19.8		17.2		25500	
trans-1,2-Dichloroethene	ug/m3	0.079	U	0.792	U	0.079	U	0.079	U	0.079	U	1.82	
trans-1,3-Dichloropropene	ug/m3	0.091	U	0.907	UJ	0.091	U	0.091	U	0.091	U	0.907	UJ
Trichloroethene	ug/m3	0.22		14.6		0.231		0.521		0.505		569	
Vinyl chloride	ug/m3	0.051	U	0.511	U	0.051	U	0.051	U	0.051	U	0.511	U
Isopropylbenzene	ug/m3	2.46	U	24.6	U	2.46	U	2.46	U	2.46	U	24.6	U

Abbreviations:
MA APH = Massachusetts Air-Phase Petroleum Hydrocarbons Method.
Qual = Data qualifier.
TO-15 SIM = Modified U.S. Environmental Protection Agency Method TO
U = Not detected at the reported detection limit for the sample.

Table 3
Analytical Results for Ambient Air and Sub-Slab Vapor Samples – April 2010
UniFirst Property
Woburn, Massachusetts

LOCATION SAMPLING DATE LAB SAMPLE ID	Units	SV-11DUP 4/12/2010 L1005229-34	Qual	IA-12 4/12/2010 L1005229-01	Qual	SV-12 4/12/2010 L1005229-31	Qual	IA-13 4/12/2010 L1005229-13	Qual	IA-13DUP 4/12/2010 L1005229-15	Qual	IA-13A 4/12/2010 L1005229-20	Qual
Petroleum Hydrocarbons in Air by TO-15 SIM													
1,3-Butadiene	ug/m3	0.416	U	0.069		0.442	U	0.075		0.08		0.071	
Methyl tert butyl ether	ug/m3	0.678	U	0.13		0.72	U	0.083		0.072	U	0.072	
Benzene	ug/m3	3	U	1.06		3.19	U	0.763		0.747		0.785	
Toluene	ug/m3	1.77	U	7.98		1.88	U	4.87		4.26		4.8	
Ethylbenzene	ug/m3	0.816	U	0.833		0.868	U	0.581		0.395		0.59	
Xylenes, Total	ug/m3	2.45	U	3.14		2.6	U	2.16	J	1.31	J	2.18	
Naphthalene	ug/m3	2.46	U	3.73		2.62	U	6.63		0.367	J	15.6	
Petroleum Hydrocarbons in Air by MA APH													
C5-C8 Aliphatics, Adjusted	ug/m3	110	U	48		120	U	27		20		32	
C9-C12 Aliphatics, Adjusted	ug/m3	130	U	58		140	U	21	U	14	U	18	U
C9-C10 Aromatics	ug/m3	94	U	10	U	100	U	10	U	10	U	10	U
Volatile Organics in Air by TO-15 SIM													
1,1,1-Trichloroethane	ug/m3	67.8		0.469		1050		0.665		0.654		0.714	
1,1,2-Trichloroethane	ug/m3	1.02	U	0.109	U	1.09	U	0.109	U	0.109	U	0.109	U
1,1-Dichloroethane	ug/m3	1.06		0.081	U	3.64		0.089		0.085		0.089	
1,1-Dichloroethene	ug/m3	0.745	U	0.079	U	6.02		0.079	U	0.079	U	0.079	U
1,2,4-Trimethylbenzene	ug/m3	0.924	U	1.22		0.982	U	0.727		0.211		0.791	
1,2-Dibromoethane	ug/m3	0.722	U	0.077	U	0.768	U	0.077	U	0.077	U	0.077	U
1,2-Dichloroethane	ug/m3	0.761	U	0.542		0.809	U	0.4		0.364		0.404	
1,2-Dichloropropane	ug/m3	0.868	U	0.092	U	0.924	U	0.092	U	0.092	U	0.092	U
1,3-Dichlorobenzene	ug/m3	1.13	U	0.12	U	1.2	U	0.12	U	0.12	U	0.12	U
1,4-Dichlorobenzene	ug/m3	1.13	U	2.27		1.2	U	1.62		0.27		1.83	
Bromodichloromethane	ug/m3	0.63	U	0.067	U	0.67	U	0.067	U	0.067	U	0.067	U
Bromoform	ug/m3	1.94	U	0.206	U	2.06	U	0.206	U	0.206	U	0.206	U
Carbon tetrachloride	ug/m3	1.18	U	0.434		1.26	U	0.415		0.408		0.408	
Chlorobenzene	ug/m3	0.865	U	0.092	U	0.92	U	0.092	U	0.092	U	0.092	U
Chloroform	ug/m3	1.79		0.156		0.976	U	0.136		0.122		0.132	
cis-1,2-Dichloroethene	ug/m3	194		0.079	U	1.19		0.194		0.178		0.198	
Methylene chloride	ug/m3	16.3	U	1.74	U	17.4	U	1.74	U	4.4		1.74	U
Tetrachloroethene	ug/m3	22600		45		16000		48.2		43.6		60.2	
trans-1,2-Dichloroethene	ug/m3	1.38		0.079	U	0.792	U	0.079	U	0.079	U	0.079	U
trans-1,3-Dichloropropene	ug/m3	0.853	UJ	0.091	U	0.907	UJ	0.091	U	0.091	U	0.091	U
Trichloroethene	ug/m3	449		0.22		26.2		0.483		0.451		0.51	
Vinyl chloride	ug/m3	0.48	U	0.051	U	0.511	U	0.051	U	0.051	U	0.051	U
Isopropylbenzene	ug/m3	23.1	U	2.46	U	24.6	U	2.46	U	2.46	U	2.46	U

Abbreviations:
MA APH = Massachusetts Air-Phase Petroleum Hydrocarbons Method.
Qual = Data qualifier.
TO-15 SIM = Modified U.S. Environmental Protection Agency Method TO
U = Not detected at the reported detection limit for the sample.

Table 3
Analytical Results for Ambient Air and Sub-Slab Vapor Samples – April 2010
UniFirst Property
Woburn, Massachusetts

LOCATION SAMPLING DATE LAB SAMPLE ID	Units	SV-13 4/12/2010 L1005229-28	Qual	SV-13DUP 4/12/2010 L1005229-27	Qual	IA-14 4/12/2010 L1005229-03	Qual	SV-14 4/12/2010 L1005229-26	Qual	IA-15 4/12/2010 L1005229-18	Qual	SV-15 4/12/2010 L1005229-30	Qual
Petroleum Hydrocarbons in Air by TO-15 SIM													
1,3-Butadiene	ug/m3	0.442	U	0.442	U	0.044	U	0.044	U	0.046		0.442	U
Methyl tert butyl ether	ug/m3	0.72	U	0.72	U	0.252		0.072	U	0.072		0.72	U
Benzene	ug/m3	3.19	U	3.19	U	0.938		0.319	U	0.664		3.19	U
Toluene	ug/m3	1.88	U	1.88	U	9.58		0.29		4.74		1.88	U
Ethylbenzene	ug/m3	0.868	U	0.868	U	1.43		0.087	U	0.968		0.868	U
Xylenes, Total	ug/m3	2.6	U	2.6	U	5.11		0.26	U	3.33		2.6	U
Naphthalene	ug/m3	2.62	U	2.62	U	2.68		0.26	U	0.498	J	2.62	U
Petroleum Hydrocarbons in Air by MA APH													
C5-C8 Aliphatics, Adjusted	ug/m3	120	U	120	U	74		13		27		120	U
C9-C12 Aliphatics, Adjusted	ug/m3	140	U	140	U	82		18	U	14	U	140	U
C9-C10 Aromatics	ug/m3	100	U	100	U	10	U	10	U	10	U	100	U
Volatile Organics in Air by TO-15 SIM													
1,1,1-Trichloroethane	ug/m3	313		373		0.218		0.812		1.68		48.1	
1,1,2-Trichloroethane	ug/m3	1.09	U	1.09	U	0.109	U	0.109	U	0.109	U	1.09	U
1,1-Dichloroethane	ug/m3	7.84		9.22		0.081	U	0.081	U	0.671		15.8	
1,1-Dichloroethene	ug/m3	2.02		2.1		0.079	U	0.079	U	0.131		0.792	U
1,2,4-Trimethylbenzene	ug/m3	0.982	U	0.982	U	1.41		0.098	U	0.211		0.982	U
1,2-Dibromoethane	ug/m3	0.768	U	0.768	U	0.077	U	0.077	U	0.077	U	0.768	U
1,2-Dichloroethane	ug/m3	0.809	U	0.809	U	0.53		0.081	U	0.093		0.809	U
1,2-Dichloropropane	ug/m3	0.924	U	0.924	U	0.092	U	0.092	U	0.092	U	0.924	U
1,3-Dichlorobenzene	ug/m3	1.2	U	1.2	U	0.12	U	0.12	U	0.12	U	1.2	U
1,4-Dichlorobenzene	ug/m3	1.2	U	1.2	U	4.22		0.12	U	0.312		1.2	U
Bromodichloromethane	ug/m3	0.67	U	0.67	U	0.067	U	0.067	U	0.067	U	0.67	U
Bromoform	ug/m3	2.06	U	2.06	U	0.206	U	0.206	U	0.206	U	2.06	U
Carbon tetrachloride	ug/m3	1.26	U	1.26	U	0.44		0.314		0.421		1.26	U
Chlorobenzene	ug/m3	1.38		1.93		0.092	U	0.092	U	0.092	U	0.92	U
Chloroform	ug/m3	13.3		16		0.405		0.098	U	0.229		3.8	
cis-1,2-Dichloroethene	ug/m3	5.66		6.7		0.079	U	0.079	U	0.57		45.5	
Methylene chloride	ug/m3	17.4	U	17.4	U	1.74	U	1.74	U	1.74	U	17.4	U
Tetrachloroethene	ug/m3	196000		156000		17.9		735		12		9160	
trans-1,2-Dichloroethene	ug/m3	0.951		1.03		0.079	U	0.079	U	0.079	U	1.19	
trans-1,3-Dichloropropene	ug/m3	0.907	UJ	0.907	UJ	0.091	U	0.091	UJ	0.091	U	0.907	UJ
Trichloroethene	ug/m3	118		148		0.118		0.107	U	0.226		168	
Vinyl chloride	ug/m3	0.511	U	0.511	U	0.051	U	0.051	U	0.051	U	0.511	U
Isopropylbenzene	ug/m3	24.6	U	24.6	U	2.46	U	2.46	U	2.46	U	24.6	U

Abbreviations:
MA APH = Massachusetts Air-Phase Petroleum Hydrocarbons Method.
Qual = Data qualifier.
TO-15 SIM = Modified U.S. Environmental Protection Agency Method TO
U = Not detected at the reported detection limit for the sample.

Table 3
Analytical Results for Ambient Air and Sub-Slab Vapor Samples – April 2010
UniFirst Property
Woburn, Massachusetts

LOCATION SAMPLING DATE LAB SAMPLE ID	Units	OA-01 4/12/2010 L1005229-11	Qual	OA-02 4/12/2010 L1005229-14	Qual	OA-02DUP 4/12/2010 L1005229-17	Qual	OA-03 4/12/2010 L1005229-04	Qual	TRIP BLANK L1005229-38	Qual
Petroleum Hydrocarbons in Air by TO-15 SIM											
1,3-Butadiene	ug/m3	0.124		0.097		0.073		0.066		0.044	U
Methyl tert butyl ether	ug/m3	0.072	U	0.072	U	0.072	U	0.072	U	0.072	U
Benzene	ug/m3	0.852		0.808		0.801		0.82		0.319	U
Toluene	ug/m3	2.32		2.38		2.2		2.16		0.188	U
Ethylbenzene	ug/m3	0.369		0.325		0.299		0.312		0.087	U
Xylenes, Total	ug/m3	1.39		1.17		1.02		1.09		0.26	U
Naphthalene	ug/m3	0.26	U	0.555		0.26	U	0.26	U	0.26	U
Petroleum Hydrocarbons in Air by MA APH											
C5-C8 Aliphatics, Adjusted	ug/m3	16		15		14		12		12	U
C9-C12 Aliphatics, Adjusted	ug/m3	14	U	14	U	14	U	14	U	14	
C9-C10 Aromatics	ug/m3	10	U	10	U	10	U	10	U	10	U
Volatile Organics in Air by TO-15 SIM											
1,1,1-Trichloroethane	ug/m3	0.131		0.262		0.278		0.376		0.109	U
1,1,2-Trichloroethane	ug/m3	0.109	U	0.109	U	0.109	U	0.109	U	0.109	U
1,1-Dichloroethane	ug/m3	0.081	U	0.081	U	0.081	U	0.081	U	0.081	U
1,1-Dichloroethene	ug/m3	0.079	U	0.079	U	0.079	U	0.079	U	0.079	U
1,2,4-Trimethylbenzene	ug/m3	0.344		0.27		0.236		0.265		0.098	U
1,2-Dibromoethane	ug/m3	0.077	U	0.077	U	0.077	U	0.077	U	0.077	U
1,2-Dichloroethane	ug/m3	0.093		0.081	U	0.081	U	0.081	U	0.081	U
1,2-Dichloropropane	ug/m3	0.092	U	0.092	U	0.092	U	0.092	U	0.092	U
1,3-Dichlorobenzene	ug/m3	0.12	U	0.12	U	0.12	U	0.12	U	0.12	U
1,4-Dichlorobenzene	ug/m3	0.12	U	0.12	U	0.12	U	0.12	U	0.12	U
Bromodichloromethane	ug/m3	0.067	U	0.067	U	0.067	U	0.067	U	0.067	U
Bromoform	ug/m3	0.206	U	0.206	U	0.206	U	0.206	U	0.206	U
Carbon tetrachloride	ug/m3	0.421		0.408		0.434		0.421		0.126	U
Chlorobenzene	ug/m3	0.092	U	0.092	U	0.092	U	0.092	U	0.092	U
Chloroform	ug/m3	0.161		0.146		0.146		0.132		0.098	U
cis-1,2-Dichloroethene	ug/m3	0.079	U	0.079	U	0.079	U	0.079	U	0.079	U
Methylene chloride	ug/m3	2.39		1.74	U	1.74	U	1.74	U	1.74	U
Tetrachloroethene	ug/m3	0.156	U	0.196	U	0.19	U	0.217	U	0.732	
trans-1,2-Dichloroethene	ug/m3	0.079	U	0.079	U	0.079	U	0.079	U	0.079	U
trans-1,3-Dichloropropene	ug/m3	0.091	U	0.091	U	0.091	U	0.091	U	0.091	UJ
Trichloroethene	ug/m3	0.118		0.113		0.118		0.118		0.107	U
Vinyl chloride	ug/m3	0.051	U	0.051	U	0.051	U	0.051	U	0.051	U
Isopropylbenzene	ug/m3	2.46	U	2.46	U	2.46	U	2.46	U	2.46	U

Abbreviations:
MA APH = Massachusetts Air-Phase Petroleum Hydrocarbons Method.
Qual = Data qualifier.
TO-15 SIM = Modified U.S. Environmental Protection Agency Method TO
U = Not detected at the reported detection limit for the sample.

Table 4
Summary Information for Ambient Air Samples
UniFirst Property
Woburn, Massachusetts

	Laboratory Target Reporting Limit[1] ($\mu g/m^3$)	Actual Laboratory Reporting Limit IA and OA Samples ($\mu g/m^3$)	Minimum Detected Concentration IA Samples ($\mu g/m^3$)	Maximum Detected Concentration IA Samples ($\mu g/m^3$)	Minimum Detected Concentration OA Samples ($\mu g/m^3$)	Maximum Detected Concentration OA Samples ($\mu g/m^3$)
Air Phase Petroleum Hydrocarbons						
1,3-Butadiene	0.044	0.044	0.044	0.110	0.066	0.124
Methyl tert butyl ether	0.072	0.072	0.072	1.02	ND (<0.072)	ND (<0.072)
Benzene	0.223	0.319	0.664	1.43	0.801	0.852
Toluene	0.188	0.188	2.52	19.6	2.16	2.38
Ethylbenzene	0.087	0.087	0.395	1.53	0.299	0.369
Xylenes, Total	0.060	0.260	1.31	5.37	1.02	1.39
Naphthalene	0.262	0.260 [2]	0.367 J	15.6	0.555	0.555
C5-C8 Aliphatics, Adjusted	12	12	17	87	12	16
C9-C12 Aliphatics, Adjusted	14	14	18	87	ND (<14)	ND (<14)
C9-C10 Aromatics	10	10	ND (<10)	ND (<10)	ND (<10)	ND (<10)
Other VOCs						
1,2,4-Trimethylbenzene	0.098	0.098	0.211	1.60	0.236	0.344
1,2-Dibromoethane	0.154	0.077	ND (<0.077)	ND (<0.077)	ND (<0.077)	ND (<0.077)
Bromoform	0.207	0.206	ND (<0.206)	ND (<0.206)	ND (<0.206)	ND (<0.206)
Isopropylbenzene	2.46	2.46	ND (2.46)	ND (2.46)	ND (2.46)	ND (2.46)
Chlorinated VOCs						
1,1,1-Trichloroethane	0.109	0.109	0.142	1.68	0.131	0.376
1,1,2-Trichloroethane	0.109	0.109	ND (<0.109)	ND (<0.109)	ND (<0.109)	ND (<0.109)
1,1-Dichloroethane	0.081	0.081	0.085	0.671	ND (<0.081)	ND (<0.081)
1,1-Dichloroethene	0.079	0.079	0.131	0.131	ND (<0.079)	ND (<0.079)
1,2-Dichloroethane	0.081	0.081	0.093	0.874	ND (<0.081)	ND (<0.081)
Methylene chloride	1.74	1.74	1.74	4.40	2.39	2.39
Tetrachloroethene	0.136	0.136	4.34	60.2	ND (<0.156)	ND (<0.217)
Trichloroethene	0.107	0.107	0.113	0.521	0.113	0.118
cis-1,2-Dichloroethene	0.079	0.079	0.103	0.570	ND (<0.079)	ND (<0.079)
trans-1,2-Dichloroethene	0.079	0.079	ND (<0.079)	ND (<0.079)	ND (<0.079)	ND (<0.079)
Vinyl chloride	0.051	0.051	ND (<0.051)	ND (<0.051)	ND (<0.051)	ND (<0.051)
Chloroform	0.098	0.098	0.122	0.405	0.132	0.161
Carbon tetrachloride	0.126	0.126	0.402	0.490	0.408	0.434
1,2-Dichloropropane	0.092	0.092	ND (<0.092)	ND (<0.092)	ND (<0.092)	ND (<0.092)
trans-1,3-Dichloropropene	0.091	0.091	ND (<0.091)	ND (<0.091 UJ)	ND (<0.091)	ND (<0.091)
1,3-Dichlorobenzene	0.120	0.120	ND (<0.120)	ND (<0.120)	ND (<0.120)	ND (<0.120)
1,4-Dichlorobenzene	0.120	0.120	0.258	40.1	ND (<0.120)	ND (<0.120)
Bromodichloromethane	0.134	0.067	ND (<0.067)	ND (<0.067)	ND (<0.067)	ND (<0.067)
Chlorobenzene	0.092	0.092	ND (<0.092)	ND (<0.092)	ND (<0.092)	ND (<0.092)

Abbreviations:
IA = Indoor air
NA = Not applicable; the analyte was detected above the target reporting limit in all ambient air samples.
ND = Analyte was not detected in any samples above the laboratory reporting limit shown in parentheses.
OA = Outdoor air
$\mu g/m^3$ = micrograms per cubic meter

Note:
1. Table 2 provides the analytical method for each analyte and laboratory target reporting limit shown.
2. Non-detects were reported to one-half the laboratory-established quantitation limit (QL) of 0.52 $\mu g/m^3$; detects between the laboratory reporting limit shown and the QL were flagged as estimated (J).

Table 5
Summary Information for Sub-Slab Vapor Samples
UniFirst Property
Woburn, Massachusetts

	Laboratory Target Reporting Limit [1] ($\mu g/m^3$)	Actual Laboratory Reporting Limit (undiluted samples) ($\mu g/m^3$)	Minimum Detected Concentration SV Samples ($\mu g/m^3$)	Maximum Detected Concentration SV Samples ($\mu g/m^3$)
Air Phase Petroleum Hydrocarbons				
1,3-Butadiene	0.044	0.044	ND (<0.044)	ND (<0.44)
Methyl tert butyl ether	0.072	0.072	0.256	0.256
Benzene	0.223	0.319	0.872	0.872
Toluene	0.188	0.188	0.264	3.11
Ethylbenzene	0.087	0.087	0.534	0.534
Xylenes, Total	0.060	0.260	0.373	2.88
Naphthalene	0.262	0.260 [2]	1.06	1.06
C5-C8 Aliphatics, Adjusted	12	12	13	120
C9-C12 Aliphatics, Adjusted	14	14	18	490
C9-C10 Aromatics	10	10	ND (<10)	ND (<100)
Other VOCs				
1,2,4-Trimethylbenzene	0.098	0.098	0.108	1.67
1,2-Dibromoethane	0.154	0.077	ND (<0.077)	ND (<0.77)
Bromoform	0.207	0.206	ND (<0.206)	ND (<2.06)
Isopropylbenzene	2.46	2.46	ND (<2.46)	ND (<24.6)
Chlorinated VOCs				
1,1,1-Trichloroethane	0.109	0.109	0.234	1440
1,1,2-Trichloroethane	0.109	0.109	ND (<0.109)	ND (<1.09)
1,1-Dichloroethane	0.081	0.081	0.809	15.8
1,1-Dichloroethene	0.079	0.079	0.872	6.02
1,2-Dichloroethane	0.081	0.081	ND (<0.081)	ND (<0.81)
Methylene chloride	1.74	1.74	ND (<1.74)	ND (<17.4)
Tetrachloroethene	0.136	0.136	68	420000
Trichloroethene	0.107	0.107	0.247	569
cis-1,2-Dichloroethene	0.079	0.079	1.19	248
trans-1,2-Dichloroethene	0.079	0.079	0.951	1.82
Vinyl chloride	0.051	0.051	ND (<0.051)	ND (<0.51)
Chloroform	0.098	0.098	0.854	16.6
Carbon tetrachloride	0.126	0.126	0.214	0.314
1,2-Dichloropropane	0.092	0.092	ND (<0.092)	ND (<0.92)
trans-1,3-Dichloropropene	0.091	0.091	ND (<0.091)	ND (<0.91)
1,3-Dichlorobenzene	0.120	0.120	ND (<0.120)	ND (<1.20)
1,4-Dichlorobenzene	0.120	0.120	0.186	1.15
Bromodichloromethane	0.134	0.067 [3]	0.074	0.074
Chlorobenzene	0.092	0.092	1.38	1.93

Abbreviations:
NA = Not applicable; the analyte was detected above the target reporting limit in all ambient air samples.
ND = Analyte was not detected in any samples above the laboratory reporting limit shown in parentheses.
SV = Sub-slab vapor
$\mu g/m^3$ = micrograms per cubic meter

Note:
1. Table 2 provides the analytical method for each analyte and laboratory target reporting limit shown.
2. Non-detects were reported to one-half the laboratory-established quantitation limit (QL) of $0.52 \mu g/m^3$; detects between the laboratory reporting limit shown and the QL were flagged as estimated (J).
3. Detected concentrations between the laboratory reporting limit shown and the laboratory target reporting limit were flagged as estimated (J).

FIGURES

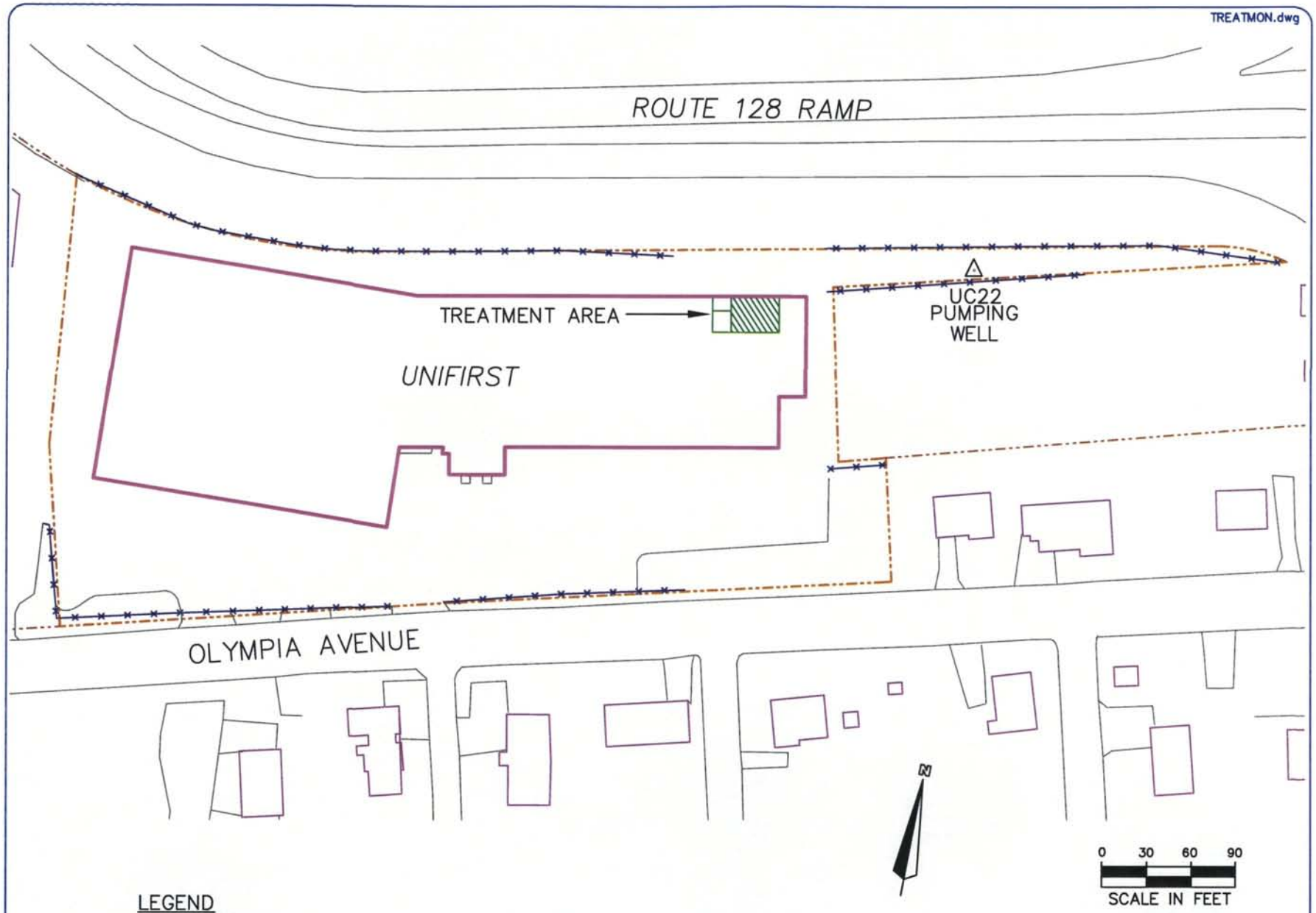

FIGURE 1: PROPERTY PLAN
UNIFIRST PROPERTY
WOBURN, MASSACHUSETTS

The Johnson Company

100 State Street, Suite 600
Montpelier, VT 05602
(802) 229-4600

Drawn by: TJK	Date:9/9/09
Chk'd by: BLL	Date:9/9/09
Scale:As Shown	Project:1-2114-2

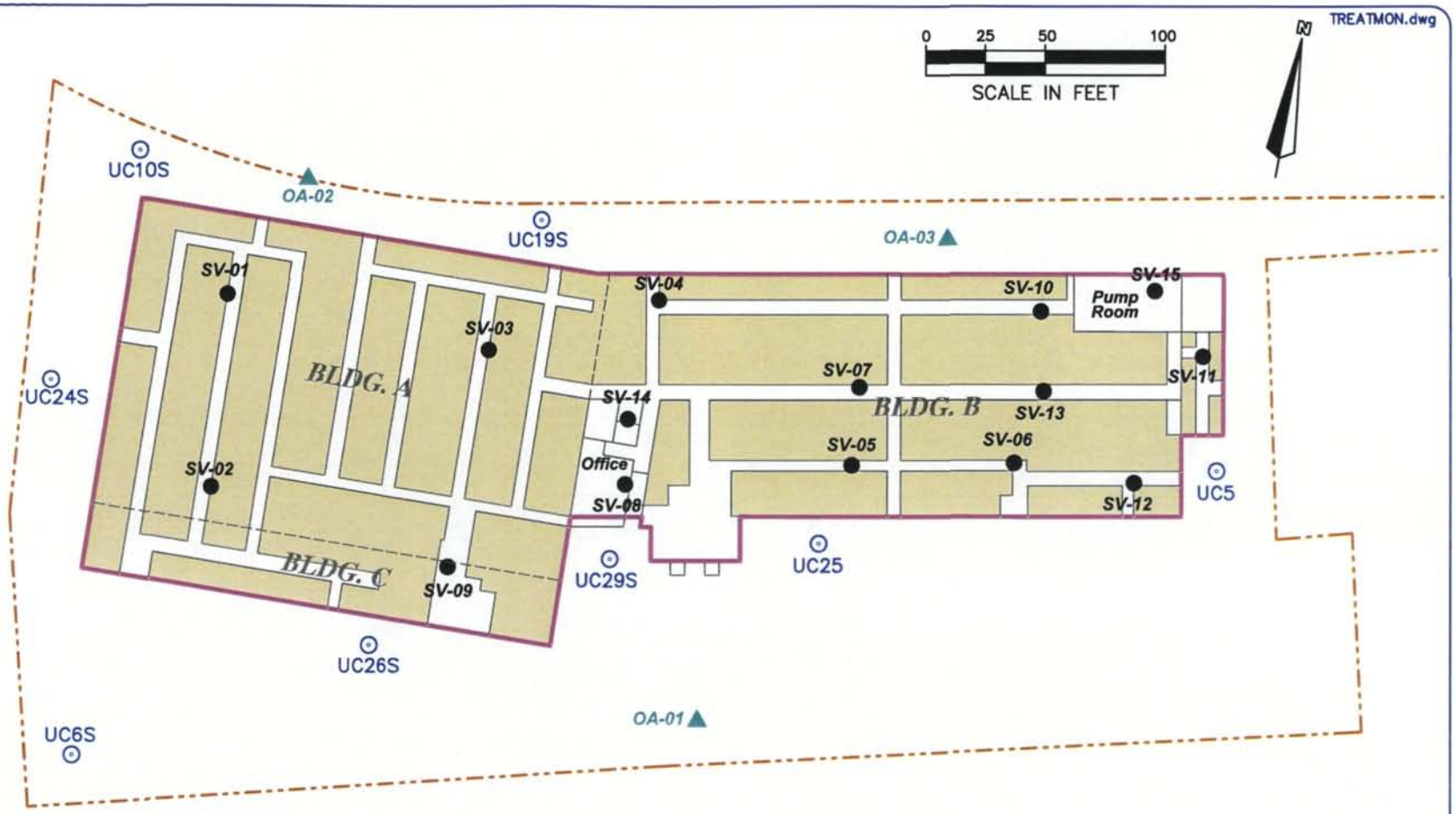

LEGEND

SV-01 ●	FINAL APRIL 2010 CO-LOCATED SUB-SLAB VAPOR / INDOOR AIR SAMPLING LOCATION
OA-01 ▲	OUTDOOR AIR SAMPLING LOCATION
UC6S ⊙	WATER-TABLE MONITORING WELL LOCATION
———	BUILDING FOOTPRINT
—·—·—	PROPERTY BOUNDARY
▭	APPROXIMATE STORAGE AREA FOOTPRINT

SOURCE:

1. UNDATED LAYOUT DRAWING OF THE EXTRA SPACE STORAGE OPERATION PROVIDED TO UNIFIRST CORP.

FIGURE 2: CURRENT BUILDING LAYOUT AND FINAL APRIL 2010 IAQA/VI SAMPLING LOCATIONS UNIFIRST PROPERTY, WOBURN, MASSACHUSETTS

The Johnson Company

100 State Street, Suite 600
Montpelier, VT 05602
(802) 229-4600

Drawn by: TJK	Date:06/14/10
Chk'd by: BLL	Date:06/14/10
Scale:As Shown	Project:1-2114-2

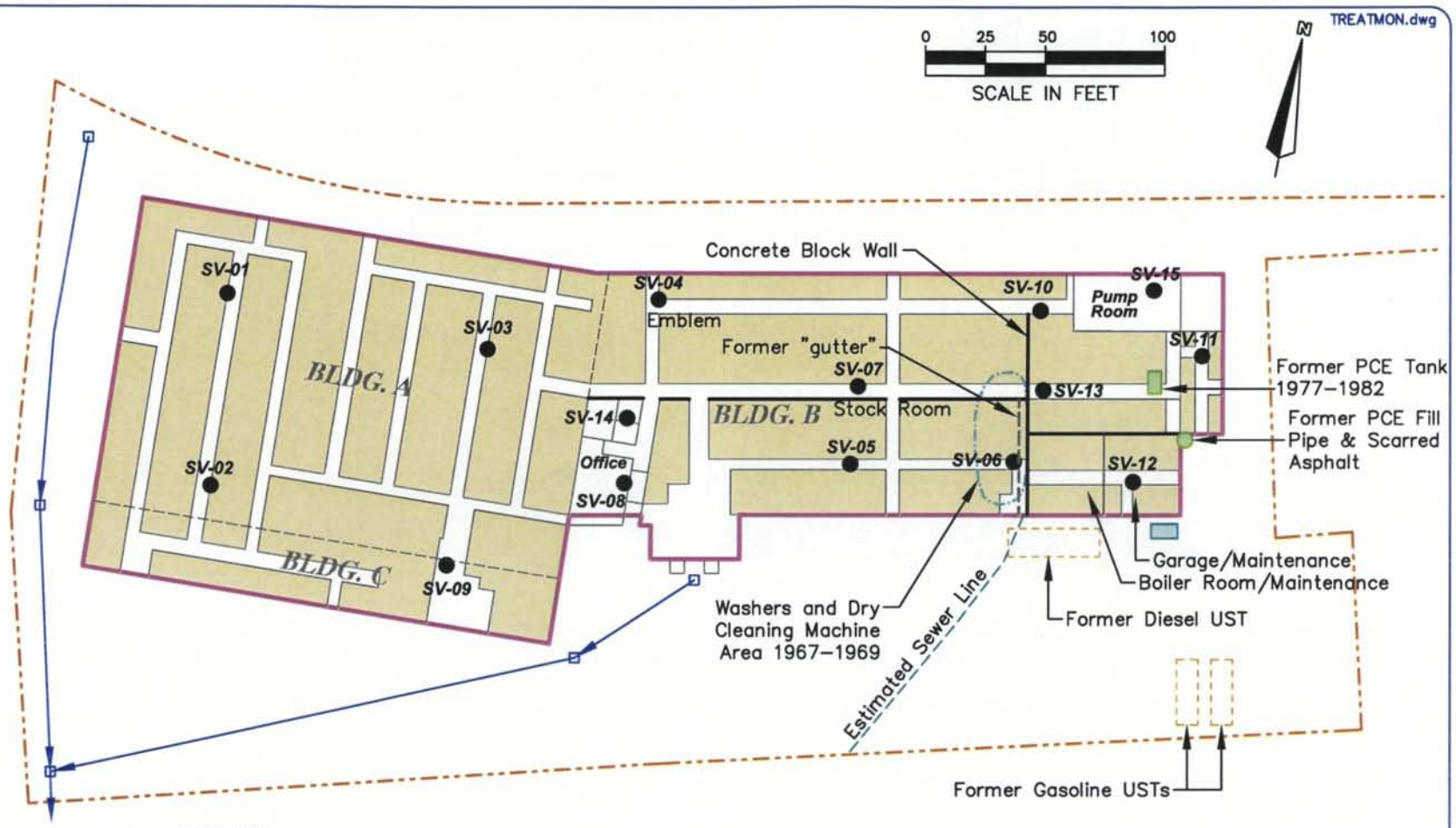

LEGEND

SV-01 ● FINAL APRIL 2010 CO-LOCATED SUB-SLAB VAPOR / INDOOR AIR SAMPLING LOCATION

STORMWATER DRAIN W/CATCH BASIN

BUILDING FOOTPRINT

PROPERTY BOUNDARY

APPROXIMATE STORAGE AREA FOOTPRINT

FORMER DUMPSTER LOCATION

NOTE:

1. ALL LOCATIONS AND DIMENSIONS ARE APPROXIMATE.

SOURCE:

1. UNDATED LAYOUT DRAWING OF THE EXTRA SPACE STORAGE OPERATION PROVIDED TO UNIFIRST CORP.

FIGURE 3: APPROXIMATE LOCATIONS OF FORMER OPERATIONS FEATURES UNIFIRST PROPERTY, WOBURN, MASSACHUSETTS

The Johnson Company

100 State Street, Suite 600
Montpelier, VT 05602
(802) 229-4600

Drawn by: TJK	Date:06/14/10
Chk'd by: BLL	Date:06/14/10
Scale:As Shown	Project:1-2114-2

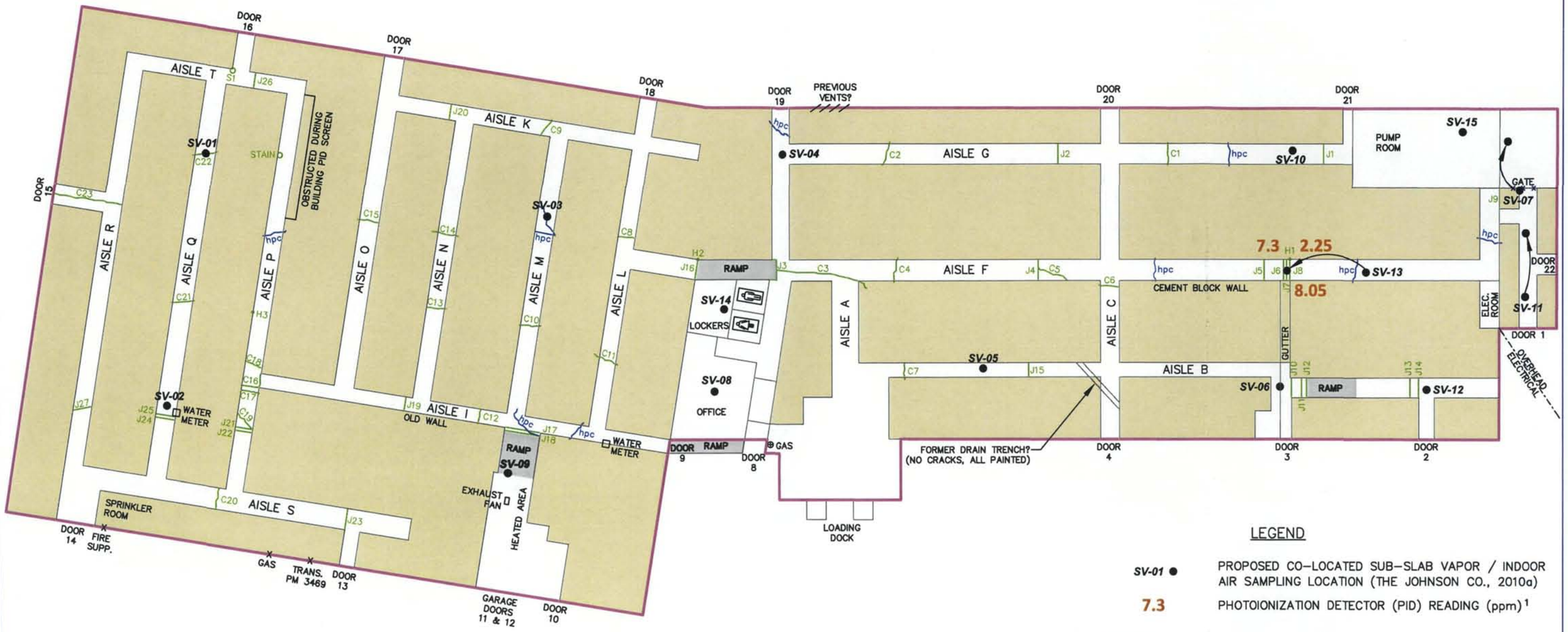

LEGEND

SV-01 ●	PROPOSED CO-LOCATED SUB-SLAB VAPOR / INDOOR AIR SAMPLING LOCATION (THE JOHNSON CO., 2010a)
7.3	PHOTOIONIZATION DETECTOR (PID) READING (ppm)[1]
	BUILDING FOOTPRINT
	APPROXIMATE STORAGE AREA FOOTPRINT[2]
J8	APPROXIMATE LOCATION OF JOINT IN FLOOR
C4	APPROXIMATE LOCATION OF CRACK IN FLOOR
hpc	APPROXIMATE LOCATION OF HAIRLINE PAINTED CRACK
	PROPOSED SAMPLING POINT RELOCATION BASED ON FIELD OBSERVATIONS ON FEBRUARY 18, 2010

NOTES:

1. PID DATA PRESENTED IN APPENDIX A-1. ONLY NON-ZERO DETECTIONS ARE SHOWN ON THIS FIGURE.
2. BASED ON AN UNDATED LAYOUT DRAWING OF THE EXTRA SPACE STORAGE OPERATION PROVIDED TO UNIFIRST CORP.

K:\1-2114-2\CAD\TREATMON.DWG

The Johnson Company
100 State Street, Suite 600
Montpelier, VT 05602
(802) 229-4600

Drawn by: TJK	Date: 06/14/10
Chk'd by: BLL	Date: 06/14/10
Scale: 1"=30'	Project: 1-2114-2

FIGURE 4: FEBRUARY 18, 2010
PRE-SAMPLING BUILDING INSPECTION
UNIFIRST PROPERTY
WOBURN, MASSACHUSETTS

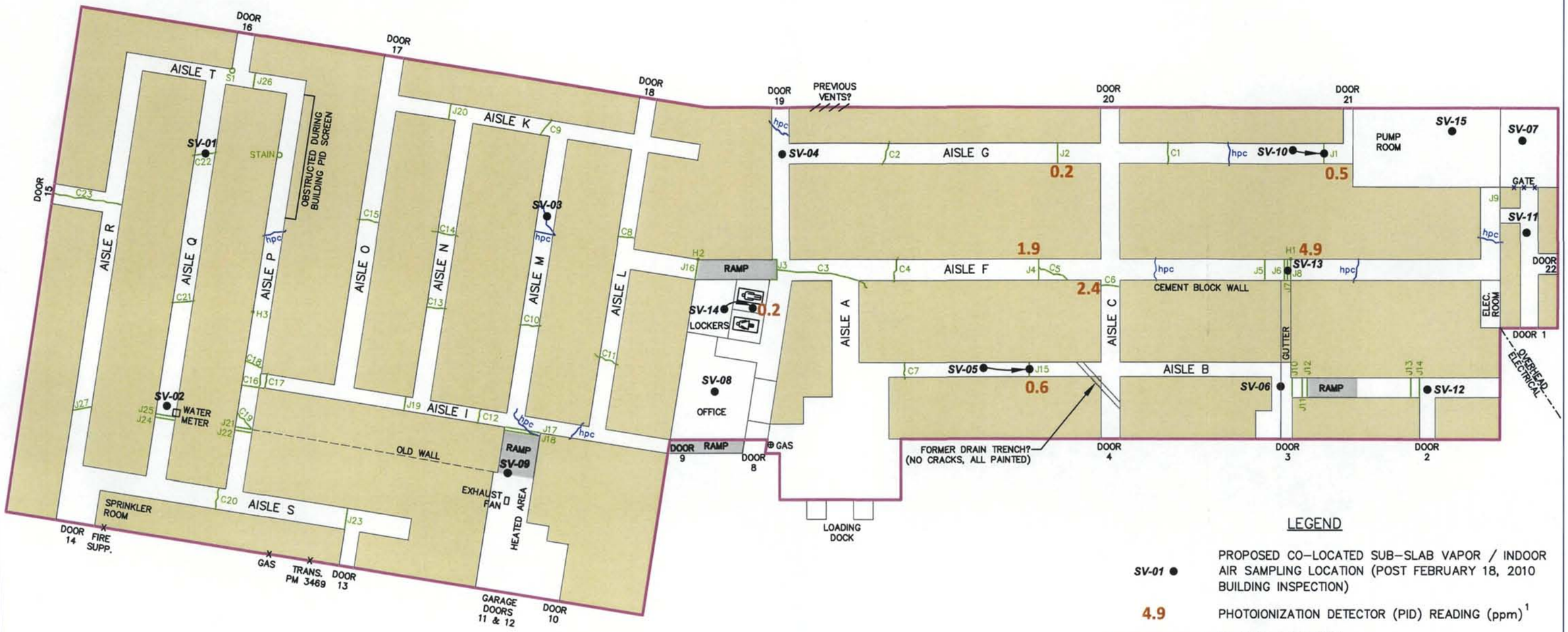

LEGEND

SV-01 ●	PROPOSED CO-LOCATED SUB-SLAB VAPOR / INDOOR AIR SAMPLING LOCATION (POST FEBRUARY 18, 2010 BUILDING INSPECTION)
4.9	PHOTOIONIZATION DETECTOR (PID) READING (ppm)[1]
	BUILDING FOOTPRINT
	APPROXIMATE STORAGE AREA FOOTPRINT[2]
J8	APPROXIMATE LOCATION OF JOINT IN FLOOR
C4	APPROXIMATE LOCATION OF CRACK IN FLOOR
hpc	APPROXIMATE LOCATION OF HAIRLINE PAINTED CRACK
	PROPOSED SAMPLING POINT RELOCATION BASED ON FIELD OBSERVATIONS ON MARCH 15, 2010

0 7.5 15 30
SCALE IN FEET

N

NOTES:

1. PID DATA PRESENTED IN APPENDIX A-2. ONLY NON-ZERO DETECTIONS MEASURED BY THE JOHNSON COMPANY ON 3/15/10 ARE SHOWN ON THIS FIGURE.
2. BASED ON AN UNDATED LAYOUT DRAWING OF THE EXTRA SPACE STORAGE OPERATION PROVIDED TO UNIFIRST CORP.

K:\1-2114-2\CAD\TREATMON.DWG

The Johnson Company
100 State Street, Suite 600
Montpelier, VT 05602
(802) 229-4600

Drawn by: TJK	Date: 06/14/10
Chk'd by: BLL	Date: 06/14/10
Scale: 1"=30'	Project: 1-2114-2

FIGURE 5: MARCH 15, 2010
PRE-SAMPLING BUILDING INSPECTION
UNIFIRST PROPERTY
WOBURN, MASSACHUSETTS

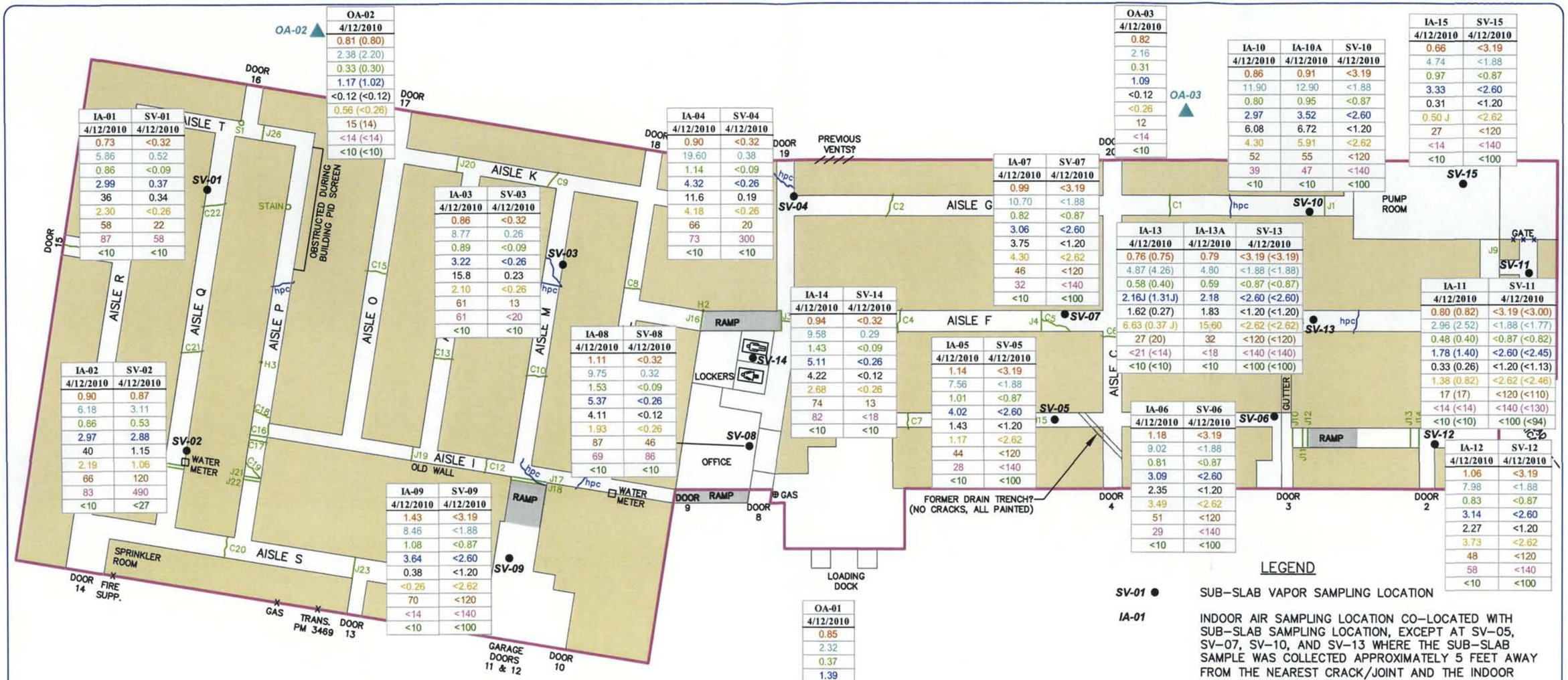

OA-02
4/12/2010
0.81 (0.80)
2.38 (2.20)
0.33 (0.30)
1.17 (1.02)
<0.12 (<0.12)
0.56 (<0.26)
15 (14)
<14 (<14)
<10 (<10)

IA-01	SV-01
4/12/2010	4/12/2010
0.73	<0.32
5.86	0.52
0.86	<0.09
2.99	0.37
36	0.34
2.30	<0.26
58	22
87	58
<10	<10

IA-02	SV-02
4/12/2010	4/12/2010
0.90	0.87
6.18	3.11
0.86	0.53
2.97	2.88
40	1.15
2.19	1.06
66	120
83	490
<10	<27

IA-03	SV-03
4/12/2010	4/12/2010
0.86	<0.32
8.77	0.26
0.89	<0.09
3.22	<0.26
15.8	0.23
2.10	<0.26
61	13
61	<20
<10	<10

IA-04	SV-04
4/12/2010	4/12/2010
0.90	<0.32
19.60	0.38
1.14	<0.09
4.32	<0.26
11.6	0.19
4.18	<0.26
66	20
73	300
<10	<10

IA-05	SV-05
4/12/2010	4/12/2010
1.14	<3.19
7.56	<1.88
1.01	<0.87
4.02	<2.60
1.43	<1.20
1.17	<2.62
44	<120
28	<140
<10	<100

IA-06	SV-06
4/12/2010	4/12/2010
1.18	<3.19
9.02	<1.88
0.81	<0.87
3.09	<2.60
2.35	<1.20
3.49	<2.62
51	<120
29	<140
<10	<100

IA-07	SV-07
4/12/2010	4/12/2010
0.99	<3.19
10.70	<1.88
0.82	<0.87
3.06	<2.60
3.75	<1.20
4.30	<2.62
46	<120
32	<140
<10	<100

IA-08	SV-08
4/12/2010	4/12/2010
1.11	<0.32
9.75	0.32
1.53	<0.09
5.37	<0.26
4.11	<0.12
1.93	<0.26
87	46
69	86
<10	<10

IA-09	SV-09
4/12/2010	4/12/2010
1.43	<3.19
8.46	<1.88
1.08	<0.87
3.64	<2.60
0.38	<1.20
<0.26	<2.62
70	<120
<14	<140
<10	<100

IA-10	IA-10A	SV-10
4/12/2010	4/12/2010	4/12/2010
0.86	0.91	<3.19
11.90	12.90	<1.88
0.80	0.95	<0.87
2.97	3.52	<2.60
6.08	6.72	<1.20
4.30	5.91	<2.62
52	55	<120
39	47	<140
<10	<10	<100

IA-11	SV-11
4/12/2010	4/12/2010
0.80 (0.82)	<3.19 (<3.00)
2.96 (2.52)	<1.88 (<1.77)
0.48 (0.40)	<0.87 (<0.82)
1.78 (1.40)	<2.60 (<2.45)
0.33 (0.26)	<1.20 (<1.13)
1.38 (0.82)	<2.62 (<2.46)
17 (17)	<120 (<110)
<14 (<14)	<140 (<130)
<10 (<10)	<100 (<94)

IA-12	SV-12
4/12/2010	4/12/2010
1.06	<3.19
7.98	<1.88
0.83	<0.87
3.14	<2.60
2.27	<1.20
3.73	<2.62
48	<120
58	<140
<10	<100

IA-13	IA-13A	SV-13
4/12/2010	4/12/2010	4/12/2010
0.76 (0.75)	0.79	<3.19 (<3.19)
4.87 (4.26)	4.80	<1.88 (<1.88)
0.58 (0.40)	0.59	<0.87 (<0.87)
2.16J (1.31J)	2.18	<2.60 (<2.60)
1.62 (0.27)	1.83	<1.20 (<1.20)
6.63 (0.37 J)	15.60	<2.62 (<2.62)
27 (20)	32	<120 (<120)
<21 (<14)	<18	<140 (<140)
<10 (<10)	<10	<100 (<100)

IA-14	SV-14
4/12/2010	4/12/2010
0.94	<0.32
9.58	0.29
1.43	<0.09
5.11	<0.26
4.22	<0.12
2.68	<0.26
74	13
82	<18
<10	<10

IA-15	SV-15
4/12/2010	4/12/2010
0.66	<3.19
4.74	<1.88
0.97	<0.87
3.33	<2.60
0.31	<1.20
0.50 J	<2.62
27	<120
<14	<140
<10	<100

OA-03
4/12/2010
0.82
2.16
0.31
1.09
<0.12
<0.26
12
<14
<10

OA-01
4/12/2010
0.85
2.32
0.37
1.39
<0.12
<0.26
16
<14
<10

KEY

IA-01	Location
4/12/2010	Sampling Date
0.73	Benzene Concentration (ug/m3)
5.86	Toluene Concentration (ug/m3)
0.86	Ethylbenzene Concentration (ug/m3)
2.99	Xylenes, Total Concentration (ug/m3)
36	1,4-Dichlorobenzene (ug/m3)
2.30	Naphthalene Concentration (ug/m3)
58	C5-C8 Aliphatics, Adjusted Concentration (ug/m3)
87	C9-C12 Aliphatics, Adjusted Concentration (ug/m3)
<10	C9-C10 Aromatics Concentration (ug/m3)
(Duplicate values shown in parentheses)	

N

0 7.5 15 30

APPROXIMATE SCALE IN FEET

LEGEND

SV-01 ●	SUB-SLAB VAPOR SAMPLING LOCATION
IA-01	INDOOR AIR SAMPLING LOCATION CO-LOCATED WITH SUB-SLAB SAMPLING LOCATION, EXCEPT AT SV-05, SV-07, SV-10, AND SV-13 WHERE THE SUB-SLAB SAMPLE WAS COLLECTED APPROXIMATELY 5 FEET AWAY FROM THE NEAREST CRACK/JOINT AND THE INDOOR AIR SAMPLE WAS COLLECTED OVER THE CRACK/JOINT.
IA-10A	INDOOR AIR SAMPLING LOCATION CO-LOCATED WITH SUB-SLAB SAMPLING LOCATION APPROXIMATELY 5 FEET AWAY FROM THE NEAREST CRACK/JOINT.
OA-01 ▲	OUTDOOR AIR SAMPLING LOCATION
	BUILDING FOOTPRINT
	APPROXIMATE STORAGE AREA FOOTPRINT
J8	LOCATION OF JOINT IN FLOOR
C4	LOCATION OF CRACK IN FLOOR
hpc	LOCATION OF HAIRLINE PAINTED CRACK

NOTES:

1. BASED ON AN UNDATED LAYOUT DRAWING OF THE EXTRA SPACE STORAGE OPERATION PROVIDED TO UNIFIRST CORP.
2. ALL LOCATIONS ARE APPROXIMATE.

K:\1-2114-2\CAD\TREATMON.DWG

The Johnson Company

100 State Street, Suite 600
Montpelier, VT 05602
(802) 229-4600

Drawn by: TJK Date: 06/15/10
Chk'd by: BLL Date: 06/15/10
Scale: 1"=~30' Project: 1-2114-2

FIGURE 6: SELECT AIR-PHASE PETROLEUM COMPOUND CONCENTRATIONS IN SUB-SLAB VAPOR AND AMBIENT AIR SAMPLES UNIFIRST PROPERTY, WOBURN, MASSACHUSETTS

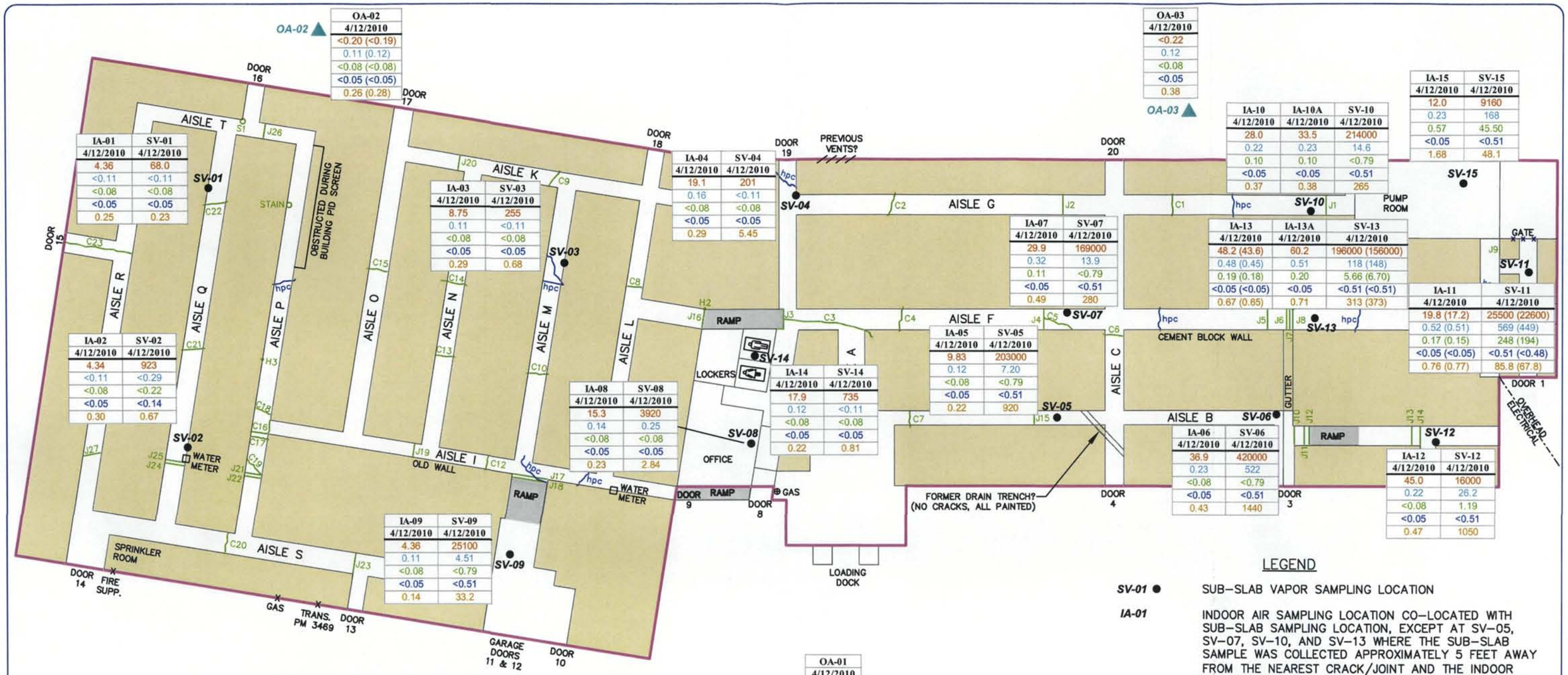

OA-02
4/12/2010
<0.20 (<0.19)
0.11 (0.12)
<0.08 (<0.08)
<0.05 (<0.05)
0.26 (0.28)

OA-03
4/12/2010
<0.22
0.12
<0.08
<0.05
0.38

IA-01	SV-01
4/12/2010	4/12/2010
4.36	68.0
<0.11	<0.11
<0.08	<0.08
<0.05	<0.05
0.25	0.23

IA-02	SV-02
4/12/2010	4/12/2010
4.34	923
<0.11	<0.29
<0.08	<0.22
<0.05	<0.14
0.30	0.67

IA-03	SV-03
4/12/2010	4/12/2010
8.75	255
0.11	<0.11
<0.08	<0.08
<0.05	<0.05
0.29	0.68

IA-04	SV-04
4/12/2010	4/12/2010
19.1	201
0.16	<0.11
<0.08	<0.08
<0.05	<0.05
0.29	5.45

IA-05	SV-05
4/12/2010	4/12/2010
9.83	203000
0.12	7.20
<0.08	<0.79
<0.05	<0.51
0.22	920

IA-06	SV-06
4/12/2010	4/12/2010
36.9	420000
0.23	522
<0.08	<0.79
<0.05	<0.51
0.43	1440

IA-07	SV-07
4/12/2010	4/12/2010
29.9	169000
0.32	13.9
0.11	<0.79
<0.05	<0.51
0.49	280

IA-08	SV-08
4/12/2010	4/12/2010
15.3	3920
0.14	0.25
<0.08	<0.08
<0.05	<0.05
0.23	2.84

IA-09	SV-09
4/12/2010	4/12/2010
4.36	25100
0.11	4.51
<0.08	<0.79
<0.05	<0.51
0.14	33.2

IA-10	IA-10A	SV-10
4/12/2010	4/12/2010	4/12/2010
28.0	33.5	214000
0.22	0.23	14.6
0.10	0.10	<0.79
<0.05	<0.05	<0.51
0.37	0.38	265

IA-11	SV-11
4/12/2010	4/12/2010
19.8 (17.2)	25500 (22600)
0.52 (0.51)	569 (449)
0.17 (0.15)	248 (194)
<0.05 (<0.05)	<0.51 (<0.48)
0.76 (0.77)	85.8 (67.8)

IA-12	SV-12
4/12/2010	4/12/2010
45.0	16000
0.22	26.2
<0.08	1.19
<0.05	<0.51
0.47	1050

IA-13	IA-13A	SV-13
4/12/2010	4/12/2010	4/12/2010
48.2 (43.6)	60.2	196000 (156000)
0.48 (0.45)	0.51	118 (148)
0.19 (0.18)	0.20	5.66 (6.70)
<0.05 (<0.05)	<0.05	<0.51 (<0.51)
0.67 (0.65)	0.71	313 (373)

IA-14	SV-14
4/12/2010	4/12/2010
17.9	735
0.12	<0.11
<0.08	<0.08
<0.05	<0.05
0.22	0.81

IA-15	SV-15
4/12/2010	4/12/2010
12.0	9160
0.23	168
0.57	45.50
<0.05	<0.51
1.68	48.1

OA-01
4/12/2010
<0.16
0.12
<0.08
<0.05
0.13

OA-01

KEY

IA-01	Location
4/12/2010	Sampling Date
4.36	PCE Concentration (ug/m3)
<0.11	TCE Concentration (ug/m3)
<0.08	c12DCE Concentration (ug/m3)
<0.05	VC Concentration (ug/m3)
0.25	111TCA Concentration (ug/m3)
(Duplicate values shown in parentheses)	

Abbr.	Description
PCE	Tetrachloroethene
TCE	Trichloroethene
c12DCE	cis-1,2-Dichloroethene
VC	Vinyl chloride
111TCA	1,1,1-Trichloroethane

0 7.5 15 30

APPROXIMATE SCALE IN FEET

LEGEND

SV-01 ●	SUB-SLAB VAPOR SAMPLING LOCATION
IA-01	INDOOR AIR SAMPLING LOCATION CO-LOCATED WITH SUB-SLAB SAMPLING LOCATION, EXCEPT AT SV-05, SV-07, SV-10, AND SV-13 WHERE THE SUB-SLAB SAMPLE WAS COLLECTED APPROXIMATELY 5 FEET AWAY FROM THE NEAREST CRACK/JOINT AND THE INDOOR AIR SAMPLE WAS COLLECTED OVER THE CRACK/JOINT.
IA-10A	INDOOR AIR SAMPLING LOCATION CO-LOCATED WITH SUB-SLAB SAMPLING LOCATION APPROXIMATELY 5 FEET AWAY FROM THE NEAREST CRACK/JOINT.
OA-01 ▲	OUTDOOR AIR SAMPLING LOCATION
	BUILDING FOOTPRINT
	APPROXIMATE STORAGE AREA FOOTPRINT
J8	LOCATION OF JOINT IN FLOOR
C4	LOCATION OF CRACK IN FLOOR
hpc	LOCATION OF HAIRLINE PAINTED CRACK

NOTES:

1. BASED ON AN UNDATED LAYOUT DRAWING OF THE EXTRA SPACE STORAGE OPERATION PROVIDED TO UNIFIRST CORP.
2. ALL LOCATIONS ARE APPROXIMATE.

K:\1-2114-2\CAD\TREATMON.DWG

The Johnson Company
100 State Street, Suite 600
Montpelier, VT 05602
(802) 229-4600

Drawn by: TJK Date: 06/15/10
Chk'd by: BLL Date: 06/15/10
Scale: 1"=~30' Project: 1-2114-2

FIGURE 7: SELECT CHLORINATED VOC CONCENTRATIONS IN SUB-SLAB VAPOR AND AMBIENT AIR SAMPLES UNIFIRST PROPERTY, WOBURN, MASSACHUSETTS

APPENDIX A

FIELD FORMS

APPENDIX A-1
PID Screening and Indoor Air Quality Building Survey, February 18, 2010

The Johnson Company, Inc.
100 State Street, Suite 600
Montpelier, VT 05602

Phone: (802) 229-4600
Fax: (802) 229-5876
www.johnsonco.com

PID CALIBRATION SHEET				
Job Name: Unifirst - Woburn, MA		Job #: 1-2114-2		
Equipment ID: Mini RAE 3000		Serial # 592 - 002198		Lamp: 11.7 eV
Brand of Standard		Spec Air		Zero Air (Pine Env)
Lot #		010859		Lot# 73092
Expiration Date		11/14/10		
Date	Time	Initials	100 ppm Isobutylene Value (ppm)	Site Background Value (ppm)
2-18-10	10:25	TRO	101 ppm	0.2 ppm (outside Building/ Treatment Area)
calibration check 2-18-10	18:40	TRO	100.2 ppm	0.0 ppm (outside Storage)

UniFirst Property Building PID Survey

JCO Project # 1-2114-2

Personnel: Longino; Osborne

Weather: partly cloudy

Outdoor Temperature: 54° F

Heating/cooling conditions (specify): gas heaters at ceiling

Indoor Temperature: 55°F

PID Equipment: miniRae 3000

See PID calibration form for PID information

PID Screening Location	Time	PID Reading	Description of Screening Location	Additional Features/Comments (Floor cracks, utility openings, potential VOC sources, etc.)
File Room	1315	0.0	Outer room of treatment plant	
SV-15	1320	0.0	"pump room" near drain	
SV-07	1322	0.0	"pump room" storage room / HW area	in newer concrete area.
SV-10	1337	0.0	Aisle G; South side; between G-34/G-32	
J1	1338	0.0	join in floor – Aisle G (G37/38)	
C1	1339	0.0	crack – Aisle G (G-24/25)	
J2	1340	0.0	join in floor – Aisle G (G17/18)	
C2	1346	0.0	crack – Aisle G (G-5/6)	
SV-04	1347	0.0	north corner	
J3	1348	0.0	join in front of washroom door	
C3	1348	0.0	long crack (21') open down Aisle ~~G~~F	F47.

Notes:

Washington + Olympia

UniFirst Property Building Inspection

JCO Project # 1-2114-2

Date: 2/18/2010

PID Screening Location	Time	PID Reading	Description of Screening Location	Additional Features/Comments (Floor cracks, utility openings, potential VOC sources, etc.)
SV-14	1352	0.0	hallway between M/W bathroom	
C4	1358	0.0	Crack – Aisle F (F5/48)	
J4	1356	0.0	join – open Aisle F (F13/53	
C5	1356	0.0	Crack – 9' long – F14	
C6	1358	0.0	Crack - mostly painted/dirt filled (C18/19)	
☆ H1	1400	7.3 peak.	hole in wall @ F-60	near old wall foundation
J5	1400	0.0	joint (F-59/19) – sealed	
J6	1401	0.0	joint (F-60/20) – sealed.	
J7	1401	0.0	joint (F-60) – old wall foundation	
J8	1401	2.25	expansion joint (F-60) – old wall foundation	
J8-2	1401	8.05	expansion joint at southwall.	
SV-13	1406.	0.0	by UC-35	

Notes:

UniFirst Property Building Inspection

JCO Project # 1-2114-2
Date: 2/18/2010

PID Screening Location	Time	PID Reading	Description of Screening Location	Additional Features/Comments (Floor cracks, utility openings, potential VOC sources, etc.)
J9	1408	0.0	expansion joint into "UC8" area.	
SV-11	1410	0.0	over UC8 cover and area (E-11)	moved out of loading ramp area; NE of test pit area.
SV-06.	1418	0.0.	north wall of Aisle B (B37/38)	outside gutter
~~C7~~ J10	1418	0.0	join – painted over.	
J11	1418	0.0	join – painted over	
J12	1418	0.0	join – painted over	
J13	1425	0.0	join of old wall (B50/51)	
J14	1425	0.0	join of old wall (B50/51)	
SV-12	1428	0.0	south wall	
J15	1431	0.0	join – construction (B21)	
SV-05	1432	0.0	north wall	
C7	1434	0.0	crack (B7/10)	

Notes:

UniFirst Property Building Inspection

JCO Project # 1-2114-2
Date: 2/18/2010.

PID Screening Location	Time	PID Reading	Description of Screening Location	Additional Features/Comments (Floor cracks, utility openings, potential VOC sources, etc.)
J16	1441	0.0	expansion joint at bottom of Faisle ramp (F4/44)	
H2	1442	0.0	Crack in wall at expansion joint	
C8	1443	0.0	Crack at L22/L30	
C9	1445	0.0	Crack at K-3	
SV-03	1447	0.0.	east wall between M27 and M25	
C10	1448	0.0	Crack (M19/20)	
C11	1450	0.0	Crack at L9	
J17	1451	0.0	joint into loading area (Doors 10, 11, 12)	
J18	1451	0.0	joint into loading area	
SV-09	1453	0.0	mark bottom of stair by loading ramp	
C12	1455	0.0	Crack at I 24/26	
J19	1458	0.0	join just past Aisle I/N intersect (I38)	

Notes:

UniFirst Property Building Inspection

JCO Project # 1-2114-2

Date: 2/18/2010

PID Screening Location	Time	PID Reading	Description of Screening Location	Additional Features/Comments (Floor cracks, utility openings, potential VOC sources, etc.)
C13	1458	0.0	Crack at N8/9	
C14	1458	0.0	Crack at. N14/15	
J20	1500	0.0	join at K7	
C15	1501	0.0	Crack at O7/20A	
C16	1502	0.0	Set of cracks E of steel disks +	
C17	1502	0.0	Set of cracks W of steel disks +	
C18	1505	0.0	Crack at (P 7/23)	
H3	1505	0.0	(P25) former utility hole.	
C19	1506	0.0	12' long crack from P21 to p4/3	
J21	1506	0.0	joint of old blg. (expasion) ~~South~~ north	
J22	1506	0.0	joint of old bldg. (expansion) South.	
J23	1510	0.0	joint expoxied over (S2)	

Notes:

UniFirst Property Building Inspection

JCO Project # 1-2114-2
Date: 2/18/2010

PID Screening Location	Time	PID Reading	Description of Screening Location	Additional Features/Comments (Floor cracks, utility openings, potential VOC sources, etc.)
C20	1510	0.0	Crack at (S7/S19)	
SV-02	1513	0.0	Q25/Q26	
J24	1515	0.0	expansion joint - old building; large joint	
J25	1515	0.0	expansion joint - old building; large joint.	
C21	1517	0.0	Crack Q9/Q31 (hallway)	
SV01	1518	0.0	West side of hall; Q14/18	
C22	1518	0.0	Crack at Q18	
S1	1519	0.0	Stain at Door 16/P8	
J26	1520	0.0	expansion joint at T4/5	
C23	1522	0.0	Crack at Aisle R/Door 15 (17' long)	
J27	1524	0.0	joint 4' S of old wall (R3/15)	
SV-08	1545	0.0	office area + outer area	

Notes:

THE JOHNSON COMPANY, INC.
100 State Street, Suite 600
Montpelier, Vermont 05602
(802) 229-4600

Indoor Air Quality Building Survey

Sampler: Bob Osborne Bettina Longino Date: 02/18/2010 JCO #: 1-2114-2

Address: 15 Olympia Avenue
Woburn, MA

Contact Name: Pete Chambers

List of Current Occupants/Occupation: No occupants

Age (if under 18)	Sex (m/f)	Occupation

Building Construction Characteristics:

What type of building is it? (Circle appropriate responses)

Single Family Multi-Family School Commercial Industrial

Ranch
Raised Ranch
Cape
Colonial
Split Level
Mobile Home

2-Family
Duplex
Apartment House (# of units ___)
Condominium (# of units ___)
Other (specify) _____

General description of building construction materials: Concrete block; concrete floor plywood interior walls.

Number of occupied stories: 1 Year built? _____

Has the building been weatherized with any of the following? (Circle all that apply)

Insulation Storm windows Energy-efficient windows Other (specify)

Attached garage? (Y/N) N Vehicle(s) present? (Y/N) N

What type of basement does the building have? (Circle all that apply)

Source: MaDEP, 2002, "Indoor Air Sampling and Evaluation Guide, WSC Policy #02-430", Office of Research and Standards, Massachusetts Department of Environmental Protection, April, 2002.

Full basement Crawlspace Slab-on-grade Other (specify)

What are the characteristics of the basement? (Circle all that apply)

Finished	Basement Floor:	Foundation Walls:	Moisture:
Unfinished	Concrete	Poured concrete	Wet
Partially finished (%)	Dirt	Block	Damp
	Other (specify)	Field stone	Dry

Is a basement sump present? (Y/N) _____ Is sump sealed to indoor air? (Y/N) _____

Does the basement have any of the following characteristics (e.g., preferential vapor pathways) that might permit soil vapor entry? (Circle all that apply)

Cracks Pipe/utility conduits Other (specify)

Foundation/slab drainage Sump pumps

Heating and Ventilation System(s) Present:

What types of heating system(s) are used in this building? (Circle all that apply)

Hot air circulation Heat pump Steam Radiation Wood stove

Other (specify) Air conditioner (central/window) Fireplace (wood/gas)

Gas-fired overhead units - blower from one to office.
2-3 open duct vents, covered in winter. Not sure if thermostatically controlled.

What types of fuels are used in this building? (Circle all that apply)

Natural gas Electric Coal Other (specify)

Fuel oil Wood Solar

electric for hot water heating in bathrooms -

What type of mechanical ventilation systems are present and/or currently operating in this building? (Circle all that apply)

Central air conditioning Mechanical fans Bathroom vent fan

Individual air conditioning Kitchen range hood Air-to-air heat exchanger

Open windows Other (specify)

Sources of Chemical Contaminants:

Which of these are present in the building?

Source: MaDEP, 2002, "Indoor Air Sampling and Evaluation Guide, WSC Policy #02-430", Office of Research and Standards, Massachusetts Department of Environmental Protection, April, 2002.

Potential VOC Source	Location of Source	Major Ingredients	Removed Prior to Air Sampling (Y/N/NA)
Paint or paint thinners			
Gas-powered equipment			
Gasoline storage cans			
Cleaning solvents			
Air fresheners	bathrooms		
Oven cleaners			
Carpet/ upholstery cleaners	office		
Hairspray			
Nail polish/ remover			
Bathroom cleaner	bathroom		
Appliance cleaner			
Furniture/ floor polish			
Moth balls			
Fuel oil tank			
Wood stove			
Fireplace			
Perfume/ colognes			
Hobby supplies			
Scented potpourri, etc			
Brake cleaner			
Liquid Wrench			
Other			
Other			
Other			

Do one or more smokers occupy this building on a regular basis? Y

Has anyone smoked in the building in the last 48 hours? (Y/N) No smoking in building.

Do the occupants frequently have clothes dry-cleaned? (Y/N) N

Any recent remodeling or repainting (Y/N, describe) roofing repairs last 3 years

Any obvious pressed wood products (e.g. hardwood plywood paneling, particleboard, fiberboard)? (Y/N) plywood walls to units.

Are there any new upholstery, drapes, carpets, or other textiles? (Y/N) office carpet > 3 years old.

Has the building been treated with any insecticides/pesticides? If so, how often and what chemicals were used? Serviced by Truly Nolan weekly/ biweekly to check traps (1/mo winter; 2/mo summer)

Source: MaDEP, 2002, "Indoor Air Sampling and Evaluation Guide, WSC Policy #02-430", Office of Research and Standards, Massachusetts Department of Environmental Protection, April, 2002.

- Sprays spider dust spray at entry doors; glue traps
- Company policy is to clean units between rentals if there is a problem, but use glue trap or spider dust.

Do any of the occupants apply pesticides/herbicides in the yard or garden? If so, how often and what chemicals are used? no lawns at site; service maintains shrubbery; chips in place; no knowledge of herbicides/pesticides.

Outdoor Sources of Contamination:

Is there any stationary emission source in the vicinity of the building? parking lots in vicinity

Are there any mobile emission sources (e.g., highway; bus stop; high-traffic area) in the vicinity of the building?

Highway offramp immediately behind building (north) from Northbound 128.

Weather Conditions During Sampling:

Outside Temperature (°F): 54°F

Prevailing wind direction: WSW

Describe the general weather conditions (e.g., sunny, cloudy, rain):

overcast to partly cloudy.

Was there any significant precipitation (0.1 inches) within 12 hours preceding the sampling event? N

Type of ground cover (e.g., grass, pavement, etc.) outside the building: paved

General Comments

Is there any other information about the structural features of this building, the habits of its occupants or potential sources of chemical contaminants to the indoor air that may be of importance in facilitating the evaluation of the indoor air quality of the building? FROM MANAGER (PETE CHAMBERS) ON 2/18/10:

Commercial tenants who store ~~chemicals~~ commercial products but they are told they can't store chemicals; painting is only touch-up for the last few years. Nothing that can or will hold fuel is allowed in units. Every now and then Pete will see power equipment and will inform owners that storage is not allowed.

– 700+ storage units in building; 5x5 up to 10x20 in size; lockers on top.

Source: MaDEP, 2002, "Indoor Air Sampling and Evaluation Guide, WSC Policy #02-430", Office of Research and Standards, Massachusetts Department of Environmental Protection, April, 2002.

APPENDIX A-2
PID Screening, March 15, 2010

1-2114-2 (FN)(#101 02/810 PID Calibration Sheet

The Johnson Company, Inc.
100 State Street, Suite 600
Montpelier, VT 05602

Phone: (802) 229-4600
Fax: (802) 229-5876
www.johnsonco.com

PID CALIBRATION SHEET				
Job Name: Unifirst - Woburn, MA		Job #: 1-2114-2		
Equipment ID: Mini RAE 3000		Serial # 592-002198		Lamp: 11.7 eV
Brand of Standard		Spec Air		Zero Air (Pine Env)
Lot #		010859		Lot# 73092
Expiration Date		11/14/10		
Date	Time	Initials	100 ppm Isobutylene Value (ppm)	Site Background Value (ppm)
2-18-10	10:25	TRO	101 ppm	0.2 ppm (outside Building/ Treatment Area)
Calibration check 2-18-10	18:40	TRO	100.2 ppm	0.0 ppm (outside Storage)
S/N = 592-002198 3-15-10	10:10	TRO	99.95 ppm	0.2 ppm (outside Building)
Pine Rental 3-15-10	10:15	TRO	100.4	0.0 ppm
S/N 592-000305	Zero Air =	0.0 Lot# 73092		
	Spec Air	100 ppm Isobutylene Lot # 010879		
			exp Date 10-01-10	

UniFirst Property Building PID Survey JCO Project # 1-2114-2

Personnel: Longino Osburne
Weather: Rain; 42°F Outdoor Temperature: 42°F
Heating/cooling conditions (specify): heaters cycling on/off Indoor Temperature: 16°C
PID Equipment: MiniRae 3000 - see calibration sheet *See PID calibration form for PID information*

PID Screening Location	Time	PID Reading	Description of Screening Location	Additional Features/Comments (Floor cracks, utility openings, potential VOC sources, etc.)
SV-15	1053	0.0	breathing zone (BZ)	
SV-07	1055	0.0	" "	
Crack by SV-07	" "	0.0	TRC screen crack.	
SV-11	1101	0.0	(BZ); marked location by E-11	near UC-8 and old test pit
SV-11	1102	0.0	TRC screen at SV-11 and E-11	
SV-13	1108	810 ppb	TRC in hole N	
SV-13	"	4.9 ppm	JCO	TRC agreed with single location.
SV-13	1110	200 ppb	TRC in hole S	Concentrations variable/down to zero
SV-13	1110	3.2 ppm	JCO	
SV-13	1117.	0.0	breathing zone	
C6	1120	-1 ppm	TRC	

Notes: TRC brought and used a ppb RAE 3000 calibrated with isobutylene to 10 ppb span gas. Rine rental.
Mass DEP photographed/videoed all locations and pump room features.
TC led site walk and responded to questions.

UniFirst Property Building Inspection

JCO Project # 1-2114-2
Date: 3/15/2010

PID Screening Location	Time	PID Reading	Description of Screening Location	Additional Features/Comments (Floor cracks, utility openings, potential VOC sources, etc.)
C6	1120	2.4 peak	JCO (0.9 on west side)	
SV-06	1123	0.0	location, were, B-39 all zero.	taped location removed.
SV-06	1125	0.0	TRC	
SV-12	1125	0.0	JCO - location and vicinity	
SV-12	1125	0.0	TRC - location and vicinity.	tape removed.
SV-05	1125	0.0	breathing zone	
J15	1128	130 ppb	TRC - 215 ppb peak	
J15	1128	0.6	JCO peak - 0.4 N/0.9 S	move to S side of wall
C7	1132	0.0	~~both TRC and~~ JCO	
C7	1132	10 ppb	TRC	
office	1142	0.0	BZ	
office bathroom	1143	20 ppb	~20 ppb TRC (28 on duct tape)	cleaning fluids; cutting oil duct tape on shelf by reading

Notes:

UniFirst Property Building Inspection

JCO Project # 1-2114-2

Date: 3/15/2010

PID Screening Location	Time	PID Reading	Description of Screening Location	Additional Features/Comments (Floor cracks, utility openings, potential VOC sources, etc.)
SV-14	1144	0.0	BZ	
mens bathroom	1145	63ppb	TRC peak at pipe back of toilet.	
" "	" "	0.0	JCO — " " " "	move location to pipe back of toilet, pending Lemay approval
cabinet in men's bathroom	1146	0.2	JCO cleaning cabinet - locked	inventory cabinet
hallway outside bathroom	1150	low ppb	slightly elevated ambient ppb	discuss presence of cleaning supplies duct tape.
J3/C3	1153	0.0	JCO and TRC	
C4	1154	0	TRC	
J4	1155	930ppb	TRC - at F-13 end.	
J4	1155	1.9	JCO - " " " (under F-13)	
J4	1156	0.0	JCO - at F-53 end	
J1	1158	30ppb	TRC	
J1	1158	0.5	JCO - center. (move to G-37)	TRC = 0.05 ppm. TRC noted that conc's variable over time.

Notes: Re J4 - readings were ~~from~~ highest from under locker F-13. Mass DEP Rep commented that what is in lockers is unknown. SV-10 moved to J1 location per TRC. Mass DEP not sure about move.

UniFirst Property Building Inspection

JCO Project # 1-2114-2

Date: 3/15/2010

PID Screening Location	Time	PID Reading	Description of Screening Location	Additional Features/Comments (Floor cracks, utility openings, potential VOC sources, etc.)
J7	1203	~100 ppb	peak TRC	
J2	1203	0.2	Center of crack	
C2	1204	0.0	TRC and JCO	
SV-04	1205	0.0	BZ	
H2	1206	0.0	TRC + JCO	
J16	1206	0.0	TRC + JCO	
SV-03	1210	0.0	TRC at crack.	
C10	1211	0.0	TRC + JCO	
SV-09	1212	0.0	JCO – BZ.	
C-12	1215	0.0	JCO + TRC	
J20	1215	0.0	JCO	
C14	1216	0.0	JCO + TRC	

Notes: Tim noted Dave S. recommended the SV-04 location due to old vents and old emblem room. Building A cooler than Building B

UniFirst Property Building Inspection

JCO Project # 1-2114-2
Date: 3/15/2010

PID Screening Location	Time	PID Reading	Description of Screening Location	Additional Features/Comments (Floor cracks, utility openings, potential VOC sources, etc.)
JCO	1216	0.0	TRC + JCO	
O-14	1217	0.0	spots on floor	
C15	1218	0.0	TRC + JCO	
C16/17	1220	0.0	TRC + JCO - at area of small dishes	
Crack	1222	0.0	P-31 to P-13	
J26	1223	0.0	JCO	
J26	1223	1.0 ppb	TRC	
SV-01	1225	0.0	BZ	- TRC/Mass DEP may come back with a blanket move on crack or 2' off crack
C-22	1225	0.0	both ends / TRC + JCO	
water metershump	1228	19 ppb	TRC - vary 0-19 ppb - to 32 - to 0	near SV-02
" "	1229	0.0	JCO	
C23	1230	0.0	JCO + TRC	

Notes: TRC noted good correlation between two PIDs. Mass DEP confirmed that we had screened top of well covers on building and BUBO confirmed that we did not open well covers but did PID over top of wells.

UniFirst Property Building Inspection

JCO Project # 1-2114-2
Date: 3/15/2010

PID Screening Location	Time	PID Reading	Description of Screening Location	Additional Features/Comments (Floor cracks, utility openings, potential VOC sources, etc.)
C23	1232	8ppb	BZ – sustained at R/S Aisle int²	R-31 : 18ppb R-35 – 4ppb R-33 : 18ppb in opening to locker.
C20	1234	0.0	TRC + JCO	
J21/22	1235	0.0	JCO	
J23	1236	0.0	JCO	
J23	1236	1.0ppb	TRC	

Notes: Aisle R/S : TRC noted may be due to storage in lockers of "fresh carpets".

TRC inputted 3-15-10 PID Reading on figure

All results are in parts per billion/volume

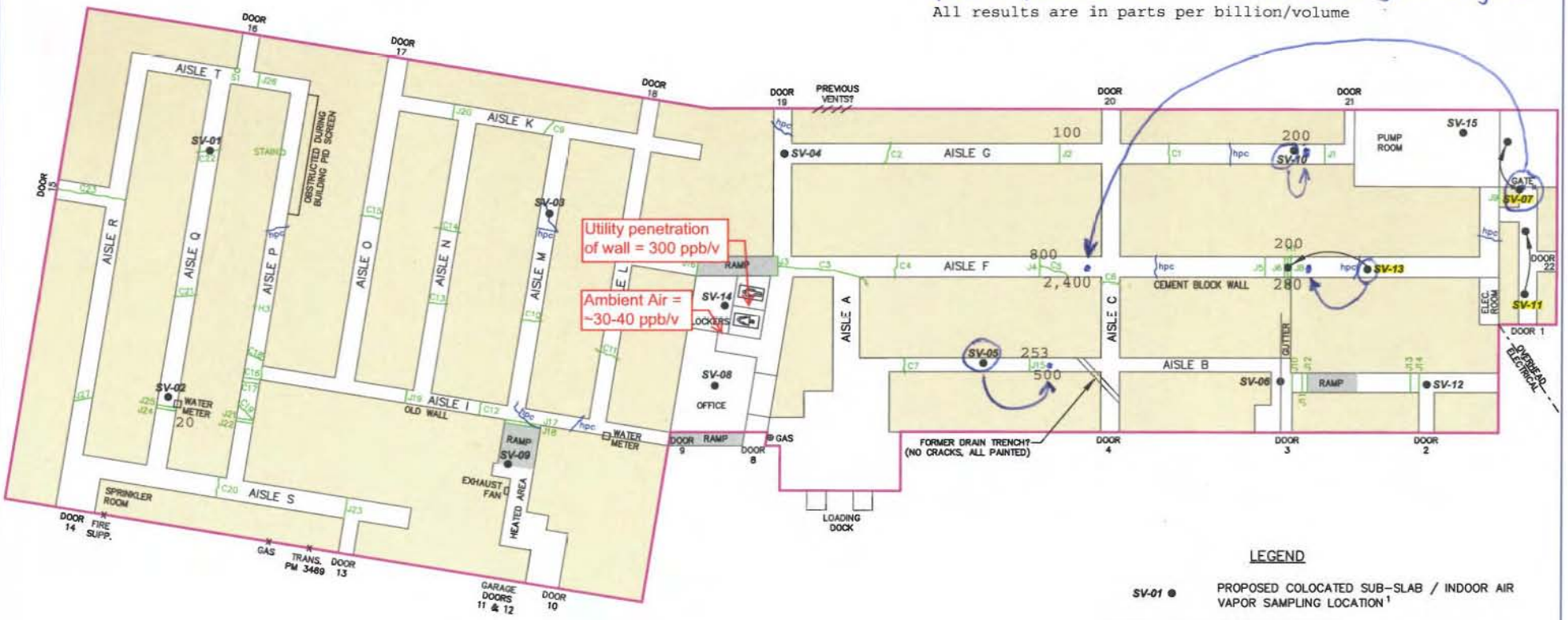

LEGEND

SV-01 ●	PROPOSED COLOCATED SUB-SLAB / INDOOR AIR VAPOR SAMPLING LOCATION [1]
———	BUILDING FOOTPRINT
	APPROXIMATE STORAGE AREA FOOTPRINT
J#	APPROXIMATE LOCATION OF JOINT IN FLOOR
C#	APPROXIMATE LOCATION OF CRACK IN FLOOR
hpc	APPROXIMATE LOCATION OF HAIRLINE PAINTED CRACK

NOTES:

1. PROPOSED SAMPLING LOCATIONS ARE APPROXIMATE AND MAY BE ADJUSTED FOLLOWING FIELD REVIEW.
2. BASED ON AN UNDATED LAYOUT DRAWING OF THE EXTRA SPACE STORAGE OPERATION PROVIDED TO UNIFIRST CORP.

DRAFT

K:\1-2114-2\CAD\TREATMON.DWG

The Johnson Company
100 State Street, Suite 600
Montpelier, VT 05602
(802) 229-4600
Drawn by: TJK Date: 03/11/10
Chk'd by: BLL Date: 03/11/10
Scale: 1"=30' Project: 1-2114-2

PRE-SAMPLING BUILDING INSPECTION
FEBRUARY 15, 2010
UNIFIRST CORPORATION
WOBURN, MASSACHUSETTS

See blue arrows for relocation of SV-05, SV-07, SV-10 & SV-13. For these four relocated ~~sampling~~ positions: sub-slab samples shall be collected approx. 5 feet away from the crack/joint; indoor air samples shall be collected over the crack/joint with the highest recorded PID readings.

APPENDIX A-3
Structural GPR Scanning Report

STRUCTURAL GPR SCANNING REPORT

Customer: The Johnson Company

Site Location: 15 Olympia Ave., Woburn, MA

On Site Scan Date: April 7, 2010

Scanning Technicians: Joseph Simonson

Report Date: June 17, 2010

SCANNING PROCEDURE

Scanning completed onsite per direction of Bob Osborne of The Johnson Company. 15 areas for vapor point installation were scanned in an attempt to avoid all slab run obstructions/conduits as well as any below slab utilities. First, all areas were scanned with a 1600 MHz Ground Penetrating Radar which operates best in checking concrete slabs and the immediate area below the slab for obstructions. After conferring with the drawing provided, Bob Osborne would mark a spot on the floor where the penetrations were supposed to be placed. The Pro Scanning tech then scanned roughly a 4' x 4' area around the mark. Primarily, throughout the building all locations were to be placed in an approximate 6" slab on grade with 6" on center wire mesh throughout. If obstructions were found, they were marked at that point on the concrete and Bob O. and the tech would adjust the mark area accordingly to avoid any known obstructions.

After scanning all areas with the 1600 MHz antenna, the technician set up the 400 MHz antenna in attempts to gain information deeper in the ground past the slab. Sample readings of each location were taken per direction of Bob Osborne, and stored on the GPR hard drive so that they could accompany this report.

SV-01, 02, 03, 04, 05, 06, 08, 13, 14, & 15

In these areas no readings showed definitive evidence that a sub-floor or second slab existed. 400 MHz data showed the 6" slab on grade with wire mesh, and no conclusive readings further below except for some plumbing lines and localized utilities that were marked out onsite if they affected the vapor point locations. Due to slab conditions and the highly reflective and interfering properties of the welded wire mesh in the slab, GPR readings diminish in their effectiveness the further they travel past the reinforcement. The mesh reflects much of the dispersed radar immediately upon entering the slab, and therefore leaves less radar to reflect off deeper surfaces, making readings fainter. Therefore it can be stated that although all efforts were

made to collect the most information possible, physical limitations of the equipment and composition of the concrete/ground limited penetration of the signal.

SV-09

In area SV-09, located in the front of the building near the garage doors, different readings were found. The readings showed the possible existence of a second surface approximately 2' from the surface of the slab. Theses readings could be consistent with a second flooring system, however, due to the above stated slab conditions combined with the possibility of the ground/fill settling from the bottom of the slab in this area to cause a small void that was seen with the 1600 MHz antennae readings, no conclusion could be made about the existence or composition of the sub floor area at that depth.

SV-07 & SV-11
LOADING DOCK AREA

In the loading dock area, the readings for SV-11 and SV-07 were consistent with the description given by Tim Cosgrave of Harvard Project Services about the sub-slab conditions. GPR readings appear to verify that the original loading dock ramp was filled in place. Although GPR cannot provide information regarding the composition of the base of that former truck ramp (concrete or asphalt), there were strong readings that suggested that the original flat surface was still in place.

SV-10

SV-10 was located in an area where apparently one sheet of wire mesh was not installed when the slab was poured. This allowed for the deepest penetration of the 400 MHz GPR and showed different results than other areas. At approximately 2' from the surface of the slab a change in radar reading suggested a change in the sub slab conditions. Readings could coincide with the presence of a second slab or footing in this area, or a change in the fill composition.

SV-12

The hallway where SV-12 is located was scanned in both directions and the information saved for this report. The attempts were made per direction of the managers onsite to ascertain data about the composition of the sub floor area. For the most part, the floor was typical of having a 6" slab on grade with wire mesh throughout. However, near the top of the ramp, GPR readings coincided with the belief that there was a buried stair case. Readings were consistent with the manner and construction of a buried staircase in that area. The entire hallway was scanned between Door 2 and Door 3. At the highest point in the hallway by Door 3, a former trench was found. GPR readings showed the presence of a metal plate or tight

reinforcement at the top of the trench below 3” of topping slab. GPR cannot determine the thickness or composition of the metal used at that trench location.

Please see the attached files that are the GPR print outs for 400 MHz antenna scanning done in each of the locations. Please feel free to view them and contact us with any further questions you may have about the data.

SV-01, 02, 03, 04, 05, 06, 08, 13, 14, & 15

SV-01

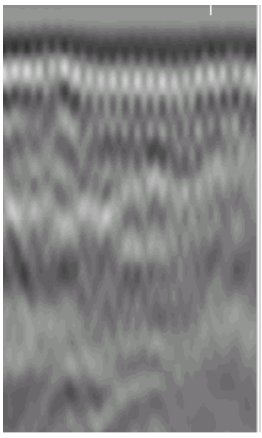

SV-02

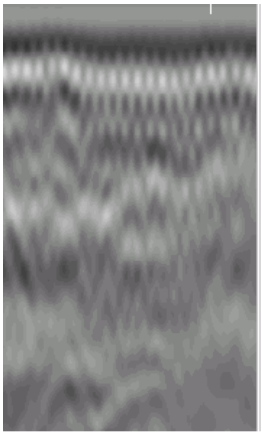

SV-03

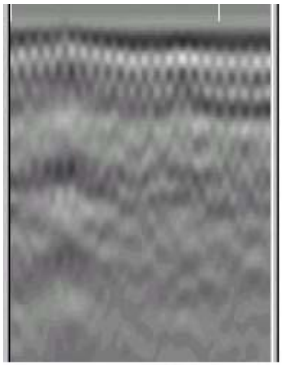

SV-04

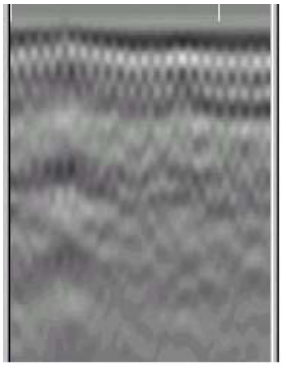

SV-05

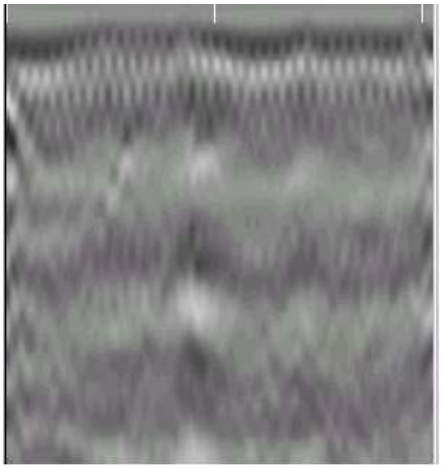

SV-06

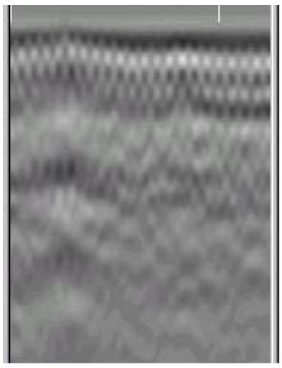

SV-08

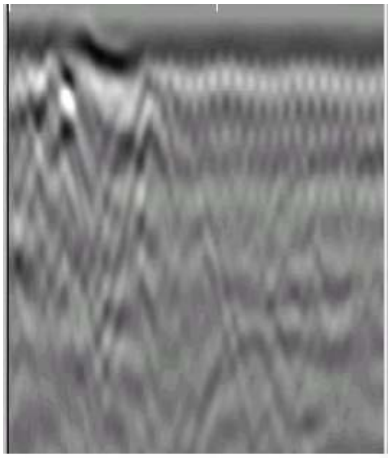

SV-13

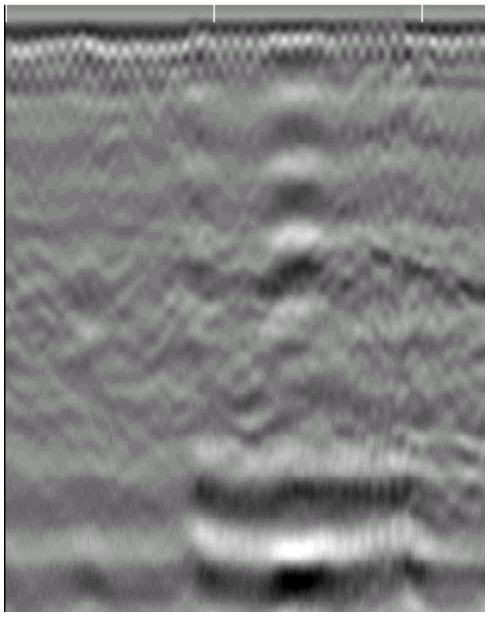

SV-14

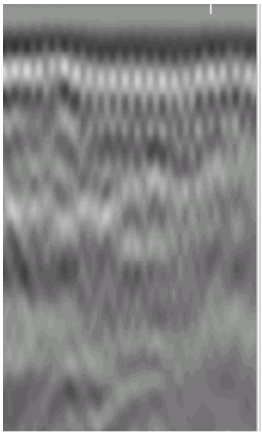

SV-15

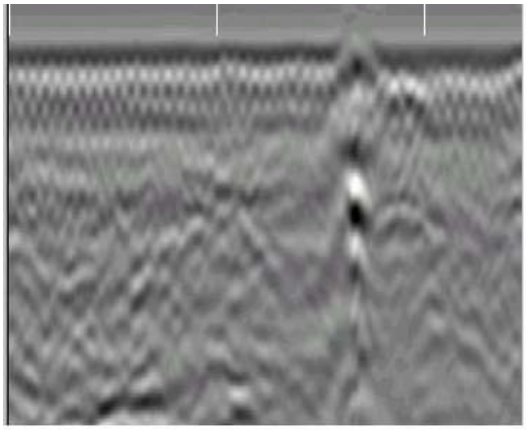

SV-07 & 11
LOADING DOCK

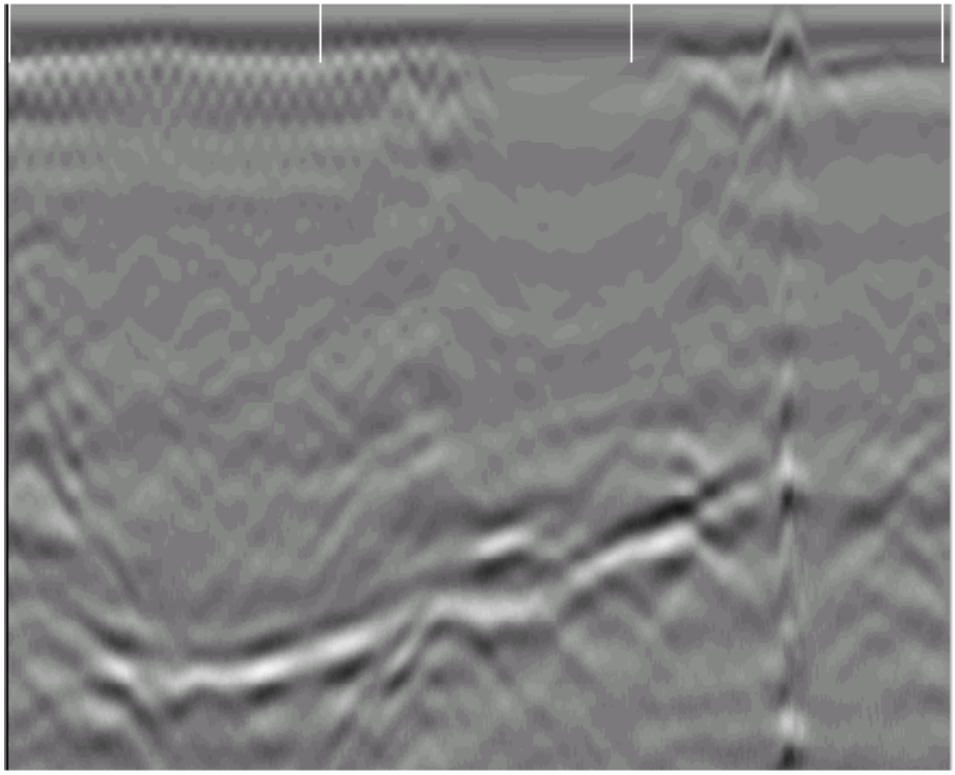

SV-10

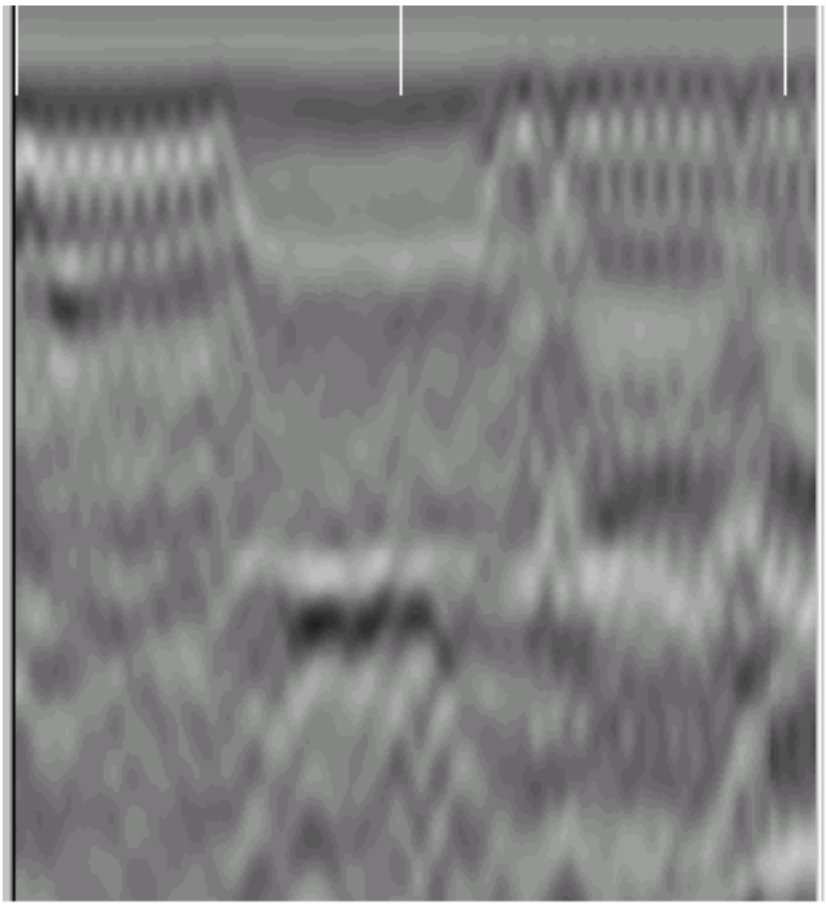

P.O. Box 320488 • Boston, MA 02132 • Phone: 617-799-9777 • Fax: 781-686-9661

SV-12

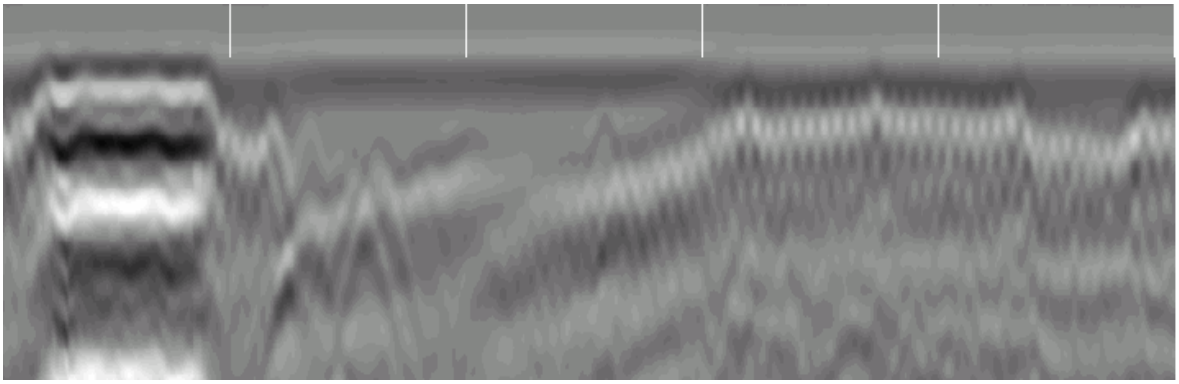

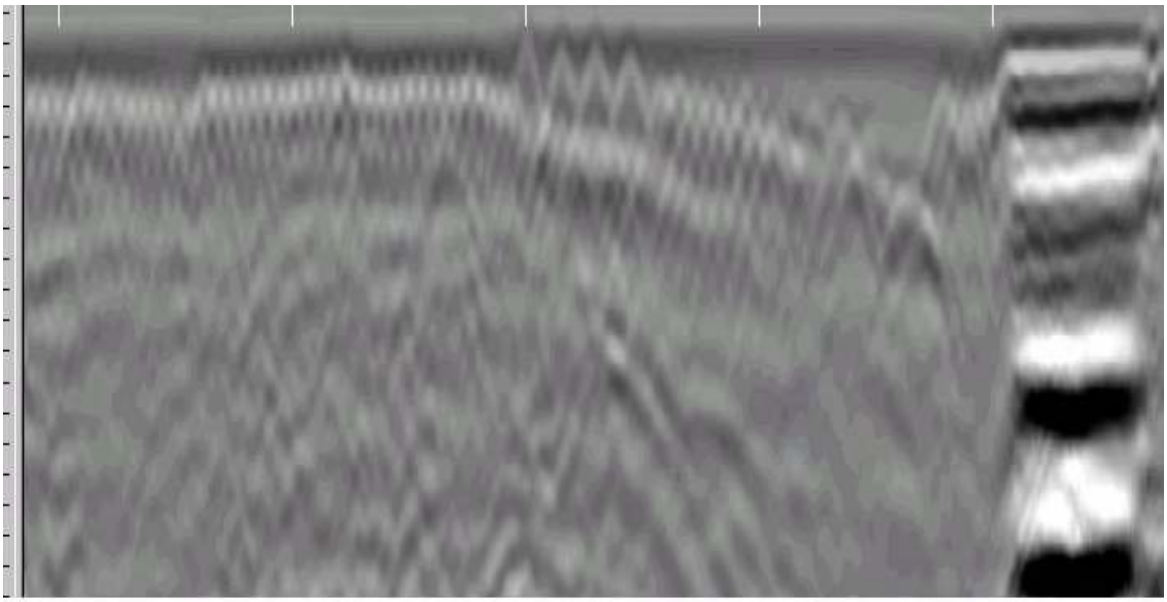

PRO SCANNING MAKES NO, AND HEREBY EXPRESSLY DISCLAIMS ALL, WARRANTIES, EXPRESS OR IMPLIED, WITH RESPECT TO THE NATURE, QUANTITY OR QUALITY OF THE SERVICES TO BE PERFORMED HEREUNDER. EXCEPT TO THE EXTENT OF ITS GROSS NEGLIGENCE OR WILLFUL MISCONDUCT, PRO SCANNING SHALL NOT BE LIABLE TO THE CUSTOMER FOR ANY DAMAGES AS A RESULT OF ITS PERFORMANCE OR FAILURE TO PERFORM THE SERVICES. THE SURVEY REPORT IS COMPILED OF APPROXIMATIONS BASED UPON PRO SCANNING'S INTERPRETATION OF THE DATA COLLECTED AND IS PROVIDED SOLELY FOR ILLUSTRATION AND INFORMATIONAL PURPOSES, PRO SCANNING IS NOT RESPONSIBLE FOR ANY LOSS OR DAMAGE CAUSED, ARISING OUT OF THE USE OF, OR RELIANCE ON THE DATA COLLECTED OR THE REPORT GENERATED. AFTER WE PROVIDE THE INTERPRETATION, THE DECISION TO PROCEED IS ENTIRELY UP TO THE CUSTOMER.

APPENDIX A-4
Sub-Slab Vapor Sampling Point Construction Logs

The Johnson Company, Inc.
100 State Street, Suite 600
Montpelier, VT 05602

Phone: (802) 229-4600
Fax: (802) 229-5876
www.johnsonco.com

PID CALIBRATION SHEET				
Job Name: Unifirst - Woburn		Job #: 1-2114-2		
Equipment ID: Mini Rae 3000		Serial # 592-903085		Lamp: 11.7 eV
Brand of Standard		Spec Air		
Lot #		011409		
Expiration Date		03/02/11		
Date	Time	Initials	100 ppm Isobutylene Value (ppm)	Site Background Value (ppm)
04/06/2010	1230	RVJ	100.4	0.0
04/07/2010	0715	RVJ	100.5	0.0
04/11/2010	1615	TEH	100.1	0.0
4/12/10	TRO	TRO	100.4	0.0

Soil Gas Well Construction Log

The Johnson Company, Inc.
100 State Street, Suite 600
Montpelier, VT 05602
Tel. (802) 229-4600

pg.

Project Name: Unifirst
Project Number: 1-2114-2
Site Location: Woburn MA

Well ID: SV-01 **Field Personnel:** TRO/RVJ **Recorded by:** TRO

Permit Number: — Installation Date: 4-7-10 Driller: JCO

Drilling Method: Hammer Drill Drilling Fluid: Dry Fluid Loss During Drilling: —

Ambient PID Reading: 0.0 Borehole PID Reading: 0.0ppm

Well Construction Details: (all measurements relative to ground surface)

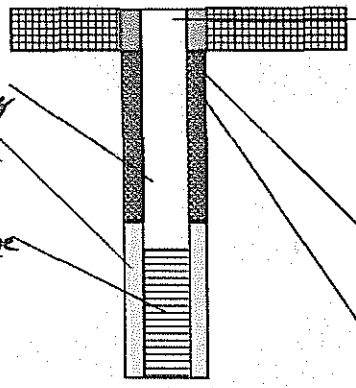

Protective Casing
Material: 1/8" NTP Plug
Slab Thickness: 0.38'
Material Under Slab: —
Road Box Seal: —

Riser Pipe Material: SS 1/4" Tubing

Sandpack Material: —
Top: — Bottom: —

Screen Material: 1/4" ID open Tube
Top: — Bottom: —
Length: — Diameter: 1/4"

Annular Seal Material: Hydraulic Cement
Top: 0.0' Bottom: 0.11'

Secondary Seal Material: Permagum
Top: 0.11' Bottom: 0.18'

Notes: 1" x 0.18' outer hole Top of port 0.05 TD = 0.28'
1/4" x 0.58" for Inner drilled hole

Integrity Testing:
Date Completed: 4-8-10 Injection Pressure: —
Tracer Type: Ultra High Tracer Grade: Helium

Tracer Gas Detection Meter:
Model: MGD-2002
Serial: Pine # 08228

Time	Sampling Rate	Concentration
13:43	575 ml/m	200 ppm Bkgrnd
13:44	↓	0 ppm Helium on
13:45	↓	0 ppm
13:46	↓	0 ppm

13:47 - 0.0ppm 13:48 - 0 ppm 13:49 - 0ppm

Purging Details: Date: 4-12-10 Personnel: TEH Pump/Equipment: SKC pump/Dry cal.
Purging Rate: ≈ 100 ml/min Start Time: 0:00 End Time: 0:30 sec.

See Ambient Air and Soil Vapor Sampling Form for sample collection details.

Notes: Placed Wand under Bucket w/out Helium running 26.2% Recorded
Located north end of aisle 8.

F:\STANDARD\JCO Forms\SoilGasWell.pub

COPYRIGHT© 2010 THE JOHNSON COMPANY, INC. DO NOT REPRODUCE OR DISTRIBUTE

Soil Gas Well Construction Log

The Johnson Company, Inc.
100 State Street, Suite 600
Montpelier, VT 05602
Tel. (802) 229-4600

pg.

Project Name: Unifirst
Project Number: 1-2114-2
Site Location: Woburn MA

Well ID: SV-02 **Field Personnel:** TRW / RVJ **Recorded by:** TRO

Permit Number: — Installation Date: 4/7/10 Driller: JCO

Drilling Method: Hammer Drill Drilling Fluid: Dry Fluid Loss During Drilling: —

Ambient PID Reading: 0.0 ppm Borehole PID Reading: 0.0 ppm

Well Construction Details: (all measurements relative to ground surface)

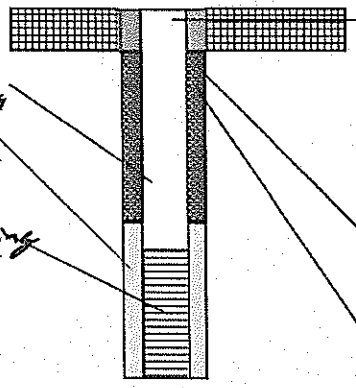

Protective Casing
Material: 1/8" NTP Plug
Slab Thickness: 0.43
Material Under Slab: —
Road Box Seal: —

Riser Pipe Material: SS 1/4" Tubing

Sandpack Material: —
Top: — Bottom: —

Screen Material: 1/4" Open Tubing
Top: — Bottom: —
Length: — Diameter: 1/4" ID

Annular Seal Material: Hydraulic Cement 19100
Top: 0.0 Bottom: 0.11

Secondary Seal Material: Permagum
Top: 0.11 Bottom: 0.18

Notes: 1"x 0.18' outer hole too deep (0.25) Redrilled out hole, sealed orig. hole 1/4" x 0.41' 2nd hole, 1"x 0.15' set pnt. Top of pnt. 0.04, TD = 0.27

Integrity Testing:
Date Completed: 4/8/10 Injection Pressure: —
Tracer Type: Helium Tracer Grade: UHP

Tracer Gas Detection Meter:
Model: MGD-2002
Serial: Pine # 08278

Time	Sampling Rate	Concentration
12:56	575 ml/min	3500 ppm BKgrnd
13:58		3550 ppm
13:59		3575 ppm
14:00		3600 ppm
14:01		3625 ppm
~~14:02~~		~~3625 ppm~~

Purging Details: Date: 4-12-10 Personnel: TEH Pump/Equipment: SKC pump / Dry Cal.
Purging Rate: ≈ 100 ml/min Start Time: 0.0 End Time: 0:30 sec

See Ambient Air and Soil Vapor Sampling Form for sample collection details.

Notes: Original outer hole drilled too Deep patched old hole w/ hydraulic cement Drilled replacement hole re-installed pnt. Located in western part of facility (circle Q) around Corner of Door 14.

F:\STANDARD\JCO Forms\SoilGasWell.pub

COPYRIGHT© 2010 THE JOHNSON COMPANY, INC. DO NOT REPRODUCE OR DISTRIBUTE

Soil Gas Well Construction Log

The Johnson Company, Inc.
100 State Street, Suite 600
Montpelier, VT 05602
Tel. (802) 229-4600

pg.

Project Name: Unifirst
Project Number: L2114-2
Site Location: Woburn MA

Well ID: SV-03 **Field Personnel:** TRO / RVJ **Recorded by:** TRO

Permit Number: — Installation Date: 4/7/10 Driller: JCO

Drilling Method: Hammer Drill Drilling Fluid: Dry Fluid Loss During Drilling: —

Ambient PID Reading: 0.0 ppm Borehole PID Reading: 0.0 ppm

Well Construction Details: (all measurements relative to ground surface)

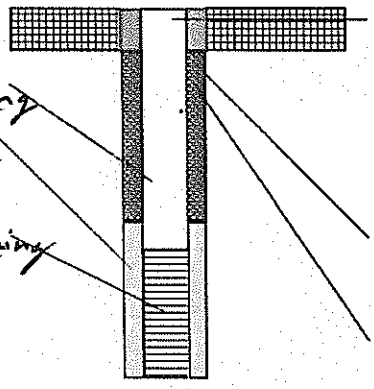

Protective Casing
Material: 1/8" NPP Plug
Slab Thickness: 0.30'
Material Under Slab: —
Road Box Seal: —

Riser Pipe Material: SS 1/4" Tubing
Sandpack Material: —
Top: — Bottom: —
Screen Material: 1/4" SS opening
Top: — Bottom: —
Length: — Diameter: 1/4" ID

Annular Seal Material: Hydraulic Cement
Top: 0.0 Bottom: 0.11
Secondary Seal Material: Permagum
Top: 0.11 Bottom: 0.18

Notes: 1" x 0.18' Probe bottom 0.29' BTOS Top of Probe 0.06
1/4" x 0.5' Top of slab to cored hole into slab

Integrity Testing:
Date Completed: 4/8/10 Injection Pressure: 120 psi
Tracer Type: Helium Tracer Grade: UHP

Tracer Gas Detection Meter:
Model: MGD-2002
Serial: Pine # 08225

Time	Sampling Rate 575 ml/min	Concentration
14:25		0.0 Dkgr
14:28		0.0 ppm
14:29		0.0 ppm
14:30		0.0 ppm
14:31		0.0 ppm
14:32		0.0 ppm

Purging Details: Date: 4/12/10 Personnel: TEH Pump/Equipment: SKC Pump / Dry Col.
Purging Rate: ≈ 100 ml/min Start Time: 0:0 End Time: 0:30 sec

See Ambient Air and Soil Vapor Sampling Form for sample collection details.

Notes: Western area of facility aide M. Towards North

F:\STANDARD\JCO Forms\SoilGasWell.pub

COPYRIGHT© 2010 THE JOHNSON COMPANY, INC. DO NOT REPRODUCE OR DISTRIBUTE

Soil Gas Well Construction Log

The Johnson Company, Inc.
100 State Street, Suite 600
Montpelier, VT 05602
Tel. (802) 229-4600

pg.

Project Name: Unifirst
Project Number: 1-2114-2
Site Location: Woburn MA

Well ID: SV-04 **Field Personnel:** TRO / RVJ **Recorded by:** TRO

Permit Number: — Installation Date: 4/8/10 Driller: JCO

Drilling Method: Hammer Drill Drilling Fluid: Dry Fluid Loss During Drilling: —

Ambient PID Reading: 0.0 ppm Borehole PID Reading: 0.0 ppm

Well Construction Details: (all measurements relative to ground surface)

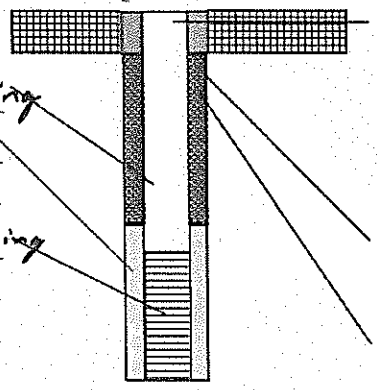

Riser Pipe Material: 1/4" SS Tubing

Sandpack Material: —

Top: — Bottom: —

Screen Material: 1/4" SS Opening

Top: — Bottom: —

Length: — Diameter: 1/4 ID

Protective Casing

Material: 1/8" NTP Plug

Slab Thickness: 0.32

Material Under Slab: —

Road Box Seal: —

Annular Seal Material: Hydraulic Cement 15:35

Top: 0.0' Bottom: 0.11'

Secondary Seal Material: Permagum

Top: 0.11' Bottom: 0.19'

Notes: 1" x 0.19',
Top of Slab to top of probe 0.05' probe 0.23' Bottom of probe 0.28' BTS

Integrity Testing:

Date Completed: 4/8/10 Injection Pressure: —

Tracer Type: Helium Tracer Grade: UHP

Tracer Gas Detection Meter:

Model: MGD - 2002

Serial: Pine # 08228

Time	Sampling Rate	Concentration
21:35	575 ml/min	0.0 ppm
21:36		0.0 ppm
21:38		2200 ppm
21:39		8124 ppm
Reset connections		

Ambient 250 ppm

Leak

Purging Details: Date: 4-12-10 Personnel: TEH Pump/Equipment: Stec Pump / Dry Cal

Purging Rate: 100 ml/min Start Time: 0:00 End Time: 0:30 sec

See Ambient Air and Soil Vapor Sampling Form for sample collection details.

Notes: Hydraulic Cement Did not set up properly. Reset pnt. Top of pnt 0.05' BTS
Repotted & Set Hydraulic Cement 15:35
Re test for leaks.

21:51	Dropped back to 0.0 ppm.	12:55	725 ppm	3rd Attempt after changing fittings. 22:06	175 ppm	22:12	1325 ppm
21:52	0.0 ppm	12:56	1600	22:07	0.0 ppm	22:13	1800
21:54	125 ppm	12:57	2400	22:08	0.0 ppm	22:14	2175
		12:58	3500	22:09	125 ppm	22:15	2600
				22:10	475 ppm	22:16	2900
				22:11	975 ppm		

4th Attempt Reseat Couplings Cleaned out teflon tape, cleaned threads

COPYRIGHT © 2010 THE JOHNSON COMPANY, INC. DO NOT REPRODUCE OR DISTRIBUTE

22:25	525 ppm	22:30	0.0 ppm
22:26	200 ppm	22:31	0.0 ppm
22:27	0.0 ppm	22:32	0.0 ppm
22:28	0.0 ppm	22:33	0.0 ppm
22:29	0.0 ppm		

Located inside door #19. @ Corner

Soil Gas Well Construction Log

The Johnson Company, Inc.
100 State Street, Suite 600
Montpelier, VT 05602
Tel. (802) 229-4600

pg.

Project Name: Unifirst
Project Number: 1-2114-2
Site Location: Woburn MA

Well ID: SV-05 **Field Personnel:** TRO / RVJ **Recorded by:** TRO

Permit Number: — Installation Date: 4/8/10 7:30 Driller: JCO

Drilling Method: Hammer Drill Drilling Fluid: Dry Fluid Loss During Drilling: —

Ambient PID Reading: 0.0 ppm Borehole PID Reading: 0.0 ppm

Well Construction Details: (all measurements relative to ground surface)

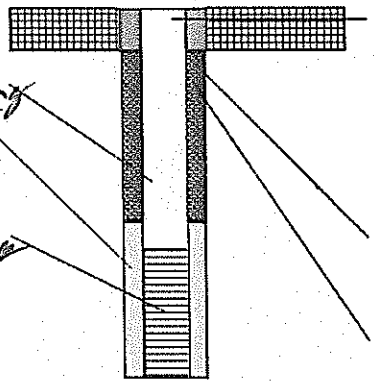

Riser Pipe Material: 1/4" SS Tubing

Sandpack Material: —

Top: — Bottom: —

Screen Material: 1/4" opening

Top: — Bottom: —

Length: — Diameter: 1/4" ID

Protective Casing

Material: 1/8" NTP Plug

Slab Thickness: 0.34'

Material Under Slab: —

Road Box Seal: —

Annular Seal Material: Hydraulic Cement 10:15

Top: 0.0 Bottom: 0.09'

Secondary Seal Material: Permagum

Top: 0.09 Bottom: 0.18

Notes: 1" X 0.18' outer hole, opened hole to ≈ 0.55' probe 0.22'

Integrity Testing:

Date Completed: 4/8/10 Injection Pressure: —

Tracer Type: Helium Tracer Grade: UHP

Tracer Gas Detection Meter:

Model: MGD-2002

Serial: Pine # 08228

Time	Sampling Rate	Concentration
17:06	575 ml/min	500 Drysta 0 ppm
17:09	↓	0.0 ppm
17:11		0.0 ppm
17:13		0.0 ppm
17:14		0.0 ppm

Purging Details: Date: 4/12/10 Personnel: TCH Pump/Equipment: STC Pump / Dry Col

Purging Rate: 100 ml/min Start Time: 0:00 End Time: 0:29 sec

See Ambient Air and Soil Vapor Sampling Form for sample collection details.

Notes: Eastern part of facility 5' off joint, around corner of Door #4

F:\STANDARD\JCO Forms\SoilGasWell.pub

COPYRIGHT© 2010 THE JOHNSON COMPANY, INC. DO NOT REPRODUCE OR DISTRIBUTE

Soil Gas Well Construction Log

The Johnson Company, Inc.
100 State Street, Suite 600
Montpelier, VT 05602
Tel. (802) 229-4600

pg.

Project Name: Unifirst
Project Number: 1-2114-2
Site Location: Woburn MA

Well ID: SV-06 **Field Personnel:** TRO/RVJ **Recorded by:** TRO

Permit Number: — Installation Date: 4/8/10 Driller: JCO

Drilling Method: Hammer Drill Drilling Fluid: Dry Fluid Loss During Drilling: —

Ambient PID Reading: 0.0 ppm Borehole PID Reading: 0.7 ppm peak, Back to 0.0 ppm

Well Construction Details: (all measurements relative to ground surface)

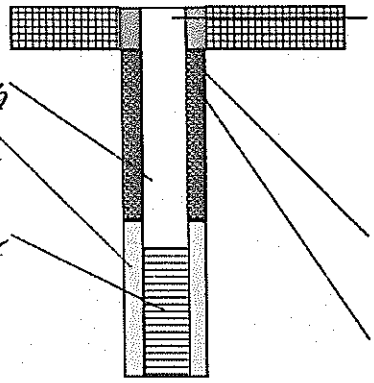

Riser Pipe Material: 1/4" SS Tubing

Sandpack Material: —

Top: — Bottom: —

Screen Material: 1/4" Opening

Top: — Bottom: —

Length: — Diameter: 1/4" ID

Protective Casing

Material: 1/8" NTP Plug

Slab Thickness: 0.40'

Material Under Slab: —

Road Box Seal: —

Annular Seal Material: Hydraulic Cement 10:10

Top: 0.0 Bottom: 0.07

Secondary Seal Material: Permagum

Top: 0.07' Bottom: 0.17'

Notes: 1" x 0.17' probe length 0.23', Probe Depth 0.28'

Integrity Testing:

Date Completed: 4/8/10 Injection Pressure: —

Tracer Type: Helium Tracer Grade: UHP

Tracer Gas Detection Meter:

Model: MGD-2002

Serial: Pine # 08228

Time	Sampling Rate	Concentration
16:54	575 ml/min	0.0 ppm Bkgrd
16:56	↓	0.0 ppm
16:58	↓	0.0 ppm
17:00	575 ml/min	0.0 ppm

Purging Details: Date: 4-12-10 Personnel: TEH Pump/Equipment: Sfec Pump/Dry Cal

Purging Rate: 100 ml/min Start Time: 0:00 End Time: 0:30 sec

See Ambient Air and Soil Vapor Sampling Form for sample collection details.

Notes: Along former Trench near Door #3 Along North wall of hallway,

F:\STANDARD\JCO Forms\SoilGasWell.pub

COPYRIGHT© 2010 THE JOHNSON COMPANY, INC. DO NOT REPRODUCE OR DISTRIBUTE

Soil Gas Well Construction Log

The Johnson Company, Inc.
100 State Street, Suite 600
Montpelier, VT 05602
Tel. (802) 229-4600

pg.

Project Name: Unifirst
Project Number: J-2114-2
Site Location: Woburn MA

Well ID: SV07 **Field Personnel:** TRO / RVJ **Recorded by:** TRO

Permit Number: — Installation Date: 4/7/10 Driller: JCO
Drilling Method: Hammer Drill Drilling Fluid: Dry Fluid Loss During Drilling: —
Ambient PID Reading: 0.0 ppm Borehole PID Reading: 0.0 ppm

Well Construction Details: (all measurements relative to ground surface)

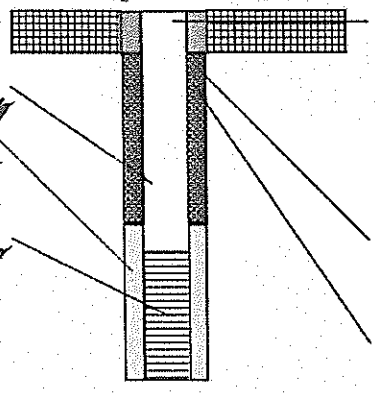

Riser Pipe Material: 1/4" SS Tubing
Sandpack Material: —
Top: — Bottom: —
Screen Material: 1/4" Opening
Top: — Bottom: —
Length: — Diameter: 1/4" ID

Protective Casing
Material: 1/8" NTP Plug
Slab Thickness: 0.40'
Material Under Slab: —
Road Box Seal: —
Annular Seal Material: Hydraulic Cement 20:4
Top: 0.0 Bottom: 0.10
Secondary Seal Material: Permagum
Top: 0.10 Bottom: 0.18'

Notes: 1" x 0.18'
ToS to Top of probe 0.06 probe = 0.23' TD = 0.29 BTS

Integrity Testing:
Date Completed: 4/8/10 Injection Pressure: —
Tracer Type: Helium Tracer Grade: UHP

Tracer Gas Detection Meter:
Model: MGD - 2002
Serial: Pinc # 08228

Time	Sampling Rate 575	Concentration
16:23		0.0 ppm Bkg.
16:24		0.0 ppm
16:25		0.0 ppm
16:26		0.0 ppm
16:27		0.0 ppm
16:28		0.0 ppm

Purging Details: Date: 4-12-10 Personnel: TEH Pump/Equipment: SKC Pump / Dry Cal.
Purging Rate: 100 ml/min Start Time: 0:00 End Time: 0:30 sec

See Ambient Air and Soil Vapor Sampling Form for sample collection details.

Notes: Central Hallway Eastern part of facility

F:\STANDARD\JCO Forms\SoilGasWell.pub

COPYRIGHT© 2010 THE JOHNSON COMPANY, INC. DO NOT REPRODUCE OR DISTRIBUTE

Soil Gas Well Construction Log

The Johnson Company, Inc.
100 State Street, Suite 600
Montpelier, VT 05602
Tel. (802) 229-4600

pg.

Project Name: Unifirst
Project Number: 1-2114-2
Site Location: Woburn MA

Well ID: SV-08 **Field Personnel:** TRO / RVJ **Recorded by:** TRO

Permit Number: — Installation Date: 4/7/10 Driller: JCO

Drilling Method: Hammer Drill Drilling Fluid: Dry Fluid Loss During Drilling: —

Ambient PID Reading: 0.0 ppm Borehole PID Reading: 0.0 ppm

Well Construction Details: (all measurements relative to ground surface)

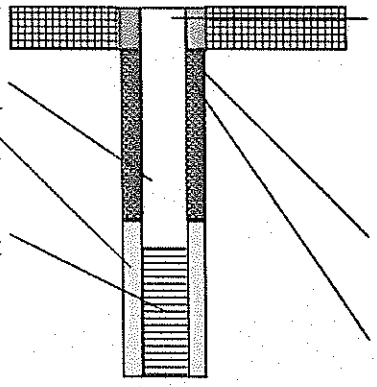

Protective Casing
Material: 1/8" NTP Plug
Slab Thickness: 0.43
Material Under Slab: —
Road Box Seal: —

Riser Pipe Material: 1/4" SS

Sandpack Material: —
Top: — Bottom: —

Screen Material: 1/4" Opening
Top: — Bottom: —
Length: — Diameter: 1/4" ID

Annular Seal Material: Hydraulic Cement
Top: 0.0 Bottom: 0.10

Secondary Seal Material: Permagum
Top: 0.10 Bottom: 0.18'

Notes: Carpet 0.02' 1" x 0.18' TOS to Top of point 0.05', TD = 0.28'

Integrity Testing:
Date Completed: 4/8/10 Injection Pressure: —
Tracer Type: Helium Tracer Grade: UHP.

Tracer Gas Detection Meter:
Model: MGD - 2002
Serial: Pine # 08228

Time	Sampling Rate	Concentration
16:05	575	25 ppm
16:06	↓	50 ppm
16:07	↓	0.0 ppm
16:08	↓	0.0 ppm
16:09	↓	0.0 ppm
16:10	↓	0.0 ppm

Purging Details: Date: 4/12/10 Personnel: TEH Pump/Equipment: SRC Pump / Dry Cal
Purging Rate: 100 ml/min Start Time: 0:00 End Time: 0:30 sec

See Ambient Air and Soil Vapor Sampling Form for sample collection details.

Notes: Bucket Reading 8% Helium after Test + Helium tank turned off. Located in carpeted area in office below window next to entrance door from vestible.

F:\STANDARD\JCO Forms\SoilGasWell.pub

COPYRIGHT© 2010 THE JOHNSON COMPANY, INC. DO NOT REPRODUCE OR DISTRIBUTE

Soil Gas Well Construction Log

The Johnson Company, Inc.
100 State Street, Suite 600
Montpelier, VT 05602
Tel. (802) 229-4600

pg.

Project Name: Unifirst
Project Number: 1-2114-2
Site Location: Woburn MA

Well ID: SV09 **Field Personnel:** TRO JRVJ **Recorded by:** TRO

Permit Number: — Installation Date: 4-7-10 Driller: JCO

Drilling Method: Hammer Drill Drilling Fluid: Dry Fluid Loss During Drilling: —

Ambient PID Reading: 0.0 ppm Borehole PID Reading: 0.0 ppm

Well Construction Details: (all measurements relative to ground surface)

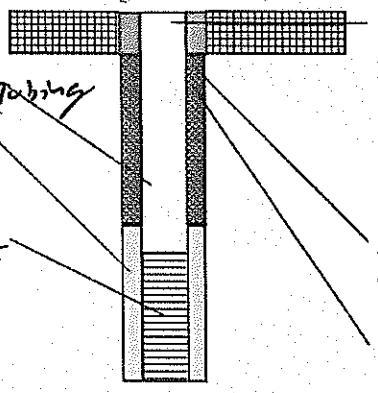

Protective Casing
Material: 1/8" NTP Plug
Slab Thickness: 0.41'
Material Under Slab: —
Road Box Seal: —

Riser Pipe Material: (0.23') 1/4" SS Tubing

Sandpack Material: —
Top: — Bottom: —

Screen Material: 1/4" Opening
Top: — Bottom: —
Length: — Diameter: 1/4" ID

Annular Seal Material: Hydraulic Cement
Top: 0.0' Bottom: 0.11'

Secondary Seal Material: Permagum
Top: 0.11' Bottom: 0.18'

Notes: 1" x 0.18' outer hole Top of point 0.05' BTS TD = 0.28'
1/4" x 0.59' Soft.

Integrity Testing:
Date Completed: 4/8/10 Injection Pressure: —
Tracer Type: Helium Tracer Grade: UHP

Tracer Gas Detection Meter:
Model: MGD-2002
Serial: Pine# 08228

Time	Sampling Rate	Concentration
14:13	575	0.0 ppm Bkgrn
14:14		0.0 ppm
14:15		0.0 ppm
14:16		0.0 ppm
14:17		0.0 ppm
14:18		0.0 ppm

14:19 - 0.0 ppm

Purging Details: Date: 4-12-10 Personnel: TEH Pump/Equipment: SKC Pump / Dry Cal

Purging Rate: 100 ml/min Start Time: 0:0 End Time: 0:31 sec.

See Ambient Air and Soil Vapor Sampling Form for sample collection details.

14:50 Notes: Pnt. started to spin in his socket, Removed pnt. cleaned out hole to install Replacement pnt. Repotted Tube + set Top of pnt. (0.28' long) to 0.5' BTS. Hydraulic Cement set @ 15:00.

20:00 Redue Heilum Test 250 ppm Bkgrd. 21:02 625 ppm set @ 575 ml/min

Bkgrd Tube 21:03 125 ppm 21:05 0.0 ppm 21:08 0.0 ppm

Heilum on 21:04 0.0 ppm 21:06 0.0 ppm 21:10 0.0 ppm

Checked pump rate of helium Detector average 563 ml/min.

Located in loading dock area below ramp inside Door #10 (South Central)

COPYRIGHT© 2010 THE JOHNSON COMPANY, INC. DO NOT REPRODUCE OR DISTRIBUTE

Soil Gas Well Construction Log

The Johnson Company, Inc.
100 State Street, Suite 600
Montpelier, VT 05602
Tel. (802) 229-4600

pg.

Project Name: unifirst
Project Number: 1-2114-2
Site Location: Woburn MA

Well ID: SV-10 **Field Personnel:** TRO / RVJ **Recorded by:** TRO

Permit Number: — Installation Date: 4/8/10 Driller: JCO

Drilling Method: Hammer Drill Drilling Fluid: Dry Fluid Loss During Drilling: —

Ambient PID Reading: 0.0 Borehole PID Reading: 0.0 ppm

Well Construction Details: (all measurements relative to ground surface)

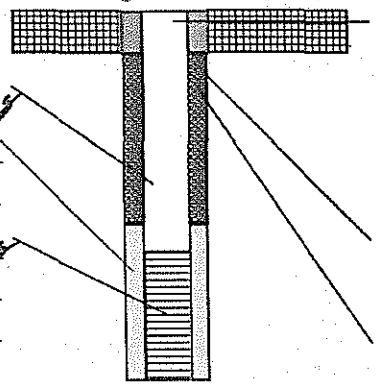

Riser Pipe Material: 1/4" SS Tubing

Sandpack Material: —

Top: — Bottom: —

Screen Material: 1/4" Opening

Top: — Bottom: —

Length: — Diameter: 1/4" ID

Protective Casing

Material: 1/8" NTP Plug

Slab Thickness: 0.36'

Material Under Slab: —

Road Box Seal: —

Annular Seal Material: Hydraulic Cement 10:55

Top: 0.0 Bottom: 0.11

Secondary Seal Material: Permagum

Top: 0.11 Bottom: 0.19

Notes: 1" x 0.19', probe length 0.23' TD = 0.55' (Hole) Probe length 0.29' BTS

Integrity Testing:

Date Completed: 4/8/10 Injection Pressure: —

Tracer Type: Helium Tracer Grade: UHP

Tracer Gas Detection Meter:

Model: MGD-2002

Serial: Pine H 08228

Time	Sampling Rate	Concentration
18:16	575 ml/min	25 ppm
18:18	↓	0.0 ppm
18:20		0.0 ppm
18:22		0.0 ppm
18:23		0.0 ppm

Purging Details: Date: 4/12/10 Personnel: TEH Pump/Equipment: SRC Pump / Dry Cal

Purging Rate: 100 ml/min Start Time: 0:00 End Time: 0:30 sec.

See Ambient Air and Soil Vapor Sampling Form for sample collection details.

Notes: Located in hallway (along South wall) NE area of building along pump room.

F:\STANDARD\JCO Forms\SoilGasWell.pub

COPYRIGHT© 2010 THE JOHNSON COMPANY, INC. DO NOT REPRODUCE OR DISTRIBUTE

Soil Gas Well Construction Log

The Johnson Company, Inc.
100 State Street, Suite 600
Montpelier, VT 05602
Tel. (802) 229-4600

pg.

Project Name: Unifirst
Project Number: 1-2114-2
Site Location: Woburn MA

Well ID: SY-11 **Field Personnel:** TRO / RVJ **Recorded by:** TRO

Permit Number: — Installation Date: 4/8/10 Driller: JCO

Drilling Method: Hammer Drill Drilling Fluid: Dry Fluid Loss During Drilling: —

Ambient PID Reading: 0.0 ppm Borehole PID Reading: old 0.5-9.4 | Now 3.1 ppm / Peak old 14.6 ppm

Well Construction Details: (all measurements relative to ground surface)

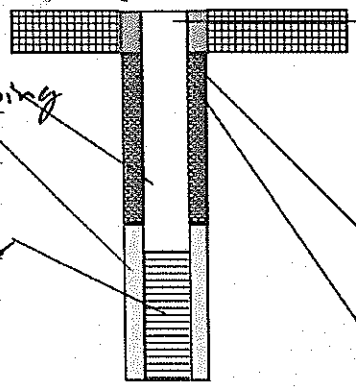

Riser Pipe Material: 1/4" SS Tubing

Sandpack Material: —

Top: — Bottom: —

Screen Material: 1/4" Opening

Top: — Bottom: —

Length: — Diameter: 1/4" ID

Protective Casing

Material: 1/8" NTP Plug

Slab Thickness: 0.20

Material Under Slab: —

Road Box Seal: —

Annular Seal Material: Hydraulic Cement 9:50

Top: 0.0 Bottom: 0.09

Secondary Seal Material: Perma gum

Top: 0.09 Bottom: 0.17

Notes: Probe length 0.17'. Top of probe 0.4' BTS. TD of probe 0.21'.

Integrity Testing:

Date Completed: 4/8/10 Injection Pressure: —

Tracer Type: Helium Tracer Grade: UHP

Tracer Gas Detection Meter:

Model: MGD-2002

Serial: Pine # 03228

Time	Sampling Rate	Concentration
17:22	575 ml/min	1550 ppm
17:24	↓	2300 ppm
17:26		2675 ppm
17:28		2875 ppm
17:30	575 ml/min	3000 ppm

Purging Details: Date: 4/12/10 Personnel: TEH Pump/Equipment: Stc Pump / Dry Col

Purging Rate: 100 ml/min Start Time: 0:00 End Time: 0:35 sec.

See Ambient Air and Soil Vapor Sampling Form for sample collection details.

Notes: PID Reading through Duct Tape after hole was closed over night 14.6 ppm
Hole was cored 4/7/10 through thin slab.
10.2 ppm Sustained. w/out Duct tape PID fluctuates 0.5-9.4 ppm.
Slab thickness 0.20'. Probed to 0.92' into gravel No refusal Hydraulic Cement hole close
Set off 0.4' toward West. 1" x 0.14' outer hole 1/4 x 0.24' (slab thickness) through
concrete Bore hole reading 3.1 ppm peak. PID screen of Baggie w/ Duct tape
= 0.3 ppm. after Baggie set for 25 min.
Located East end of building in Loading Dock area.

COPYRIGHT© 2010 THE JOHNSON COMPANY, INC. DO NOT REPRODUCE OR DISTRIBUTE

Soil Gas Well Construction Log

The Johnson Company, Inc.
100 State Street, Suite 600
Montpelier, VT 05602
Tel. (802) 229-4600

pg.

Project Name: Unifirst
Project Number: 1-2114-7
Site Location: Woburn MA

Well ID: SV-12 **Field Personnel:** TRO / RVJ **Recorded by:** TRO

Permit Number: — Installation Date: 4/8/10 Driller: JCO

Drilling Method: Hammer Drill Drilling Fluid: Dry Fluid Loss During Drilling: —

Ambient PID Reading: 0.0ppm Borehole PID Reading: 0.0ppm

Well Construction Details: (all measurements relative to ground surface)

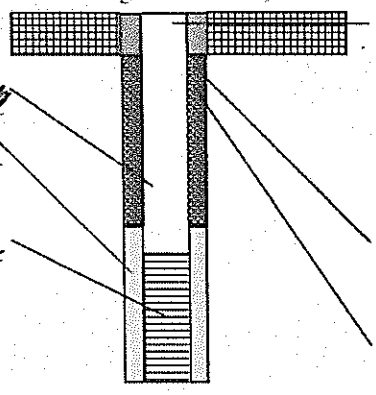

Riser Pipe Material: 1/4" SS Tubing

Sandpack Material: —

Top: — Bottom: —

Screen Material: 1/4" opening

Top: — Bottom: —

Length: — Diameter: 1/4" ID

Protective Casing

Material: 1/8" NTP Plug

Slab Thickness: 0.51'

Material Under Slab: —

Road Box Seal: —

Annular Seal Material: Hydraulic Cement 10:05

Top: 0.0 Bottom: 0.10

Secondary Seal Material: Permagum

Top: 0.10 Bottom: 0.17

Notes: 1' x 0.17', TD cord 0.70', probe 0.23' Probe Depth 0.27'

Integrity Testing:

Date Completed: 4-8-10 Injection Pressure: —

Tracer Type: Helium Tracer Grade: UHP

Tracer Gas Detection Meter:

Model: MGD-2002

Serial: Pine # 08228

Time	Sampling Rate	Concentration
16:36	575 ml/min	1350 ppm
16:38		1275 ppm
16:39		2000 ppm
16:40		2375 ppm
16:41		2650 ppm
16:42		2800 ppm
16:43		2925 ppm

16:44 3000
16:45 3075
16:46 3150

Purging Details: Date: 4/12/10 Personnel: TEH Pump/Equipment: SKC Pump / Dry Cal.

Purging Rate: 100 ml/min Start Time: 0:00 End Time: 0:30 sec

See Ambient Air and Soil Vapor Sampling Form for sample collection details.

Notes: Against wall @ Corner in SE corner of building, Near door #2

F:\STANDARD\JCO Forms\SoilGasWell.pub

COPYRIGHT© 2010 THE JOHNSON COMPANY, INC. DO NOT REPRODUCE OR DISTRIBUTE

Soil Gas Well Construction Log

The Johnson Company, Inc.
100 State Street, Suite 600
Montpelier, VT 05602
Tel. (802) 229-4600

pg.

Project Name: Unifirst
Project Number: 1-2114-2
Site Location: Woburn MA

Well ID: SV-13 **Field Personnel:** TRO / RVJ **Recorded by:** TRO

Permit Number: — Installation Date: 4/8/10 Driller: JCO

Drilling Method: Hammer Drill Drilling Fluid: Dry Fluid Loss During Drilling: —

Ambient PID Reading: 0.0 ppm Borehole PID Reading: 0.0 ppm

Well Construction Details: (all measurements relative to ground surface)

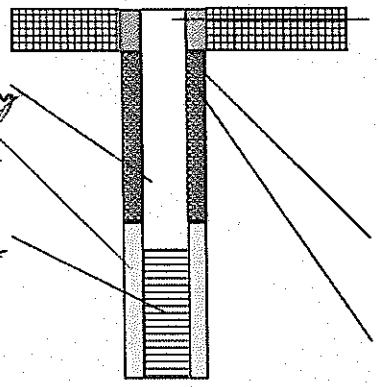

Riser Pipe Material: 1/4" SS Tubing

Sandpack Material: —
Top: — Bottom: —

Screen Material: 1/4" opening
Top: — Bottom: —
Length: — Diameter: 1/4" ID

Protective Casing
Material: 1/8" NTP Plug
Slab Thickness: 0.36'
Material Under Slab: —
Road Box Seal: —

Annular Seal Material: Hydralic Cement 10:30
Top: 0.0 Bottom: 0.11

Secondary Seal Material: Permaguard
Top: 0.11 Bottom: 0.20

Notes: 1" x 0.20', TD = 0.52', Top of Probe 0.07', TD probe = 0.30'

Integrity Testing:
Date Completed: 4/8/10 Injection Pressure: —
Tracer Type: Helium Tracer Grade: UHP

Tracer Gas Detection Meter:
Model: MGD - 2002
Serial: Pump # 08228

Time	Sampling Rate	Concentration
17:37	575 ml/min	0.0 ppm Bkgrnd
17:38	↓	0.0 ppm
17:40		0.0 ppm
17:42		0.0 ppm
17:43		0.0 ppm

Purging Details: Date: 4/12/10 Personnel: TEH Pump/Equipment: SKC Pump / Dry Col.
Purging Rate: 100 ml/min Start Time: 0:00 End Time: 0:35 sec

See Ambient Air and Soil Vapor Sampling Form for sample collection details.

Notes: Set 5' off (towards East) cracks in foundation wall.

F:\STANDARD\JCO Forms\SoilGasWell.pub

COPYRIGHT© 2010 THE JOHNSON COMPANY, INC. DO NOT REPRODUCE OR DISTRIBUTE

Soil Gas Well Construction Log

The Johnson Company, Inc.
100 State Street, Suite 600
Montpelier, VT 05602
Tel. (802) 229-4600

pg.

Project Name: Unifirst
Project Number: 1-2114.2
Site Location: Woburn MA

Well ID: SV-14 **Field Personnel:** TRO / RVJ **Recorded by:** TRO

Permit Number: — Installation Date: 4/7/10 Driller: JCO

Drilling Method: Hammer Drill Drilling Fluid: Dry Fluid Loss During Drilling: —

Ambient PID Reading: 0.0 ppm Borehole PID Reading: 0.0 ppm

Well Construction Details: (all measurements relative to ground surface)

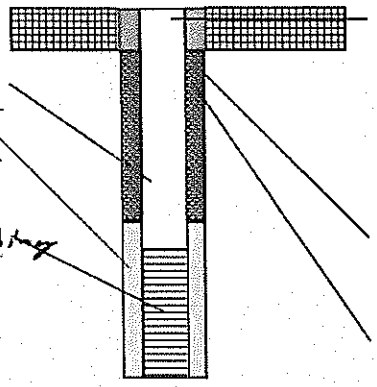

Protective Casing
Material: 1/8" NTP Plug
Slab Thickness: 0.42'
Material Under Slab: —
Road Box Seal: —

Riser Pipe Material: 1/4" SS Tube

Sandpack Material: —
Top: — Bottom: —

Screen Material: 1/4" Open Tubing
Top: — Bottom: —
Length: — Diameter: 1/4" ID

Annular Seal Material: Hydraulic Cement
Top: 0.00 Bottom: 0.09

Secondary Seal Material: Permagum
Top: 0.09 Bottom: 0.18

Notes: 1" x 0.18'
Top of Slab to top of probe 0.05', Bottom of probe 0.28' B Top Slab

Integrity Testing:
Date Completed: 4/8/10 Injection Pressure: —
Tracer Type: Helium Tracer Grade: UHP

Tracer Gas Detection Meter:
Model: MGD-2002
Serial: Pine # 08228

Time	Sampling Rate	Concentration
15:47	5.75	0.0 ppm Blgnd
15:48		0.0 ppm
15:49		0.0 ppm
15:50		0.0 ppm
15:51		0.0 ppm
15:52		0.0 ppm

15:53 - 0.0 ppm

Purging Details: Date: 4-12-10 Personnel: TEH Pump/Equipment: SKC Pump / Dry Cat
Purging Rate: 100 ml/min Start Time: 0:00 End Time: 0:30 Sec

See Ambient Air and Soil Vapor Sampling Form for sample collection details.

Notes: Located in Bathroom / Lynolium floor Between toilet + Sink.

F:\STANDARD\JCO Forms\SoilGasWell.pub

COPYRIGHT© 2010 THE JOHNSON COMPANY, INC. DO NOT REPRODUCE OR DISTRIBUTE

Soil Gas Well Construction Log

The Johnson Company, Inc.
100 State Street, Suite 600
Montpelier, VT 05602
Tel. (802) 229-4600

pg.

Project Name: Unifirst
Project Number: 1-2114-2
Site Location: Woburn MA

Well ID: SV-15 **Field Personnel:** TRW / RVJ **Recorded by:** TRO

Permit Number: — Installation Date: 4/8/10 Driller: JCO
Drilling Method: Hammer Drill Drilling Fluid: Dry Fluid Loss During Drilling: —
Ambient PID Reading: 0.0 ppm Borehole PID Reading: 0.0 ppm

Well Construction Details: (all measurements relative to ground surface)

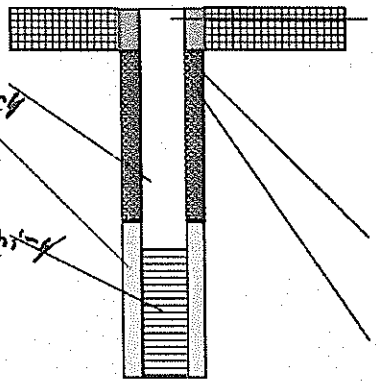

Protective Casing
Material: 1/8"
Slab Thickness: 0.53'
Material Under Slab: —
Road Box Seal: —

Riser Pipe Material: SS 1/4" Tubing
Sandpack Material: —
Top: — Bottom: —
Screen Material: 1/4" Open Tubing
Top: — Bottom: —
Length: — Diameter: 1/4" ID

Annular Seal Material: Hydraulic Cement 10:45
Top: 0.0 Bottom: 1.0'
Secondary Seal Material: Permagum
Top: 1.0' Bottom: 0.19

Notes: 1" x 0.19', TD of hole 0.65', Probe Length = 0.22', Probe Depth = 0.27' BTOS

Integrity Testing:
Date Completed: 4/8/10 Injection Pressure: —
Tracer Type: Helium Tracer Grade: UHP

Tracer Gas Detection Meter:
Model: MGD-2002
Serial: Pine # 08228

Time	Sampling Rate	Concentration
17:53	575 ml/min	525 ppm
17:55	↓	450 ppm
17:57	↓	300 ppm
17:59	↓	225 ppm

Purging Details: Date: 4-12-10 Personnel: TEH Pump/Equipment: SKC Pump / Dry Cal
Purging Rate: 100 ml/min Start Time: 0:00 End Time: 0:30 sec

See Ambient Air and Soil Vapor Sampling Form for sample collection details.

Notes: Located NE corner area in front of shelve just off floor drain trench.

F:\STANDARD\JCO Forms\SoilGasWell.pub

COPYRIGHT© 2010 THE JOHNSON COMPANY, INC. DO NOT REPRODUCE OR DISTRIBUTE

APPENDIX A-5
Ambient Air and Sub-Slab Vapor Sample Collection Logs and Chain-of-Custody Records

THE JOHNSON COMPANY, INC.
100 State Street, Suite 600
Montpelier, Vermont 05602
(802) 229-4600

DRAFT

Unifirst Woburn MA
1-2114-2

Background outside 0.4ppm / Inside PID=0.5 Readings @ Locations (create: 0.2ppm Peak)

Sample ID	IA-01	IA-02	IA-09	IA-03	IA-14	IA-04	IA-10
	0.5ppm	0.6ppm	0.5ppm	0.5 ppm	0.4ppm	0.5ppm	
Summa Canister ID (not barcode)	695	949	1667	986	945	1559	1676
Flow Controller #	290	242	379	406	256	074	205
Sampling Height (ft)	49.5"	49"	47"	48"	51.5"	47"	51"
Date	Start: 4/11/10	Start: 4/11/10	Start: 4/11/10	Start: 4/11/10	Start: 4/11/10	Start: 4/11/10	Start: 4/11/10
	End: 4/12/10	End: 4/12/10	End: 4/12/10	End: 4/12/10	End: 4/12/10	End: 4/12/10	End: 4/12/10
Time	Start: 18:25	Start: 18:27	Start: 18:29	Start: 18:31	Start: 18:33	Start: 18:35	Start: 18:40
	End: 00:39	End: 02:22	End: 01:10	End: 02:01	End: 01:40	End: 0235	End: 0227
Flow Controller Vacuum (in Hg)	Start: 7-30	Start: 7-30	Start: -31"	Start: -31	Start: -29"	Start: 7-30"	Start: -31
	End: -4"	End: -6	End: -5"	End: -6	End: -5"	End: -6"	End: -6"
Digital Pressure Gauge (in Hg)	Start: -30.2	Start: -30.1"	Start: -30.1"	Start: -30.1	Start: -30.0"	Start: -30.0"	Start: -30.1"
	End: -0.6"	End: -5.2"	End: -5.5"	End: -4.4	End: -5.6"	End: -2.6"	End: -4.1"
Ambient Temperature (°F)	Start: 62.7	Start: 62.6	Start: 63.4	Start: 62.9	Start: 61.8	Start: 62.4	Start: 61.7
	End: 59.5	End: 59.9	End: 60.5	End: 60.6	End: 60.6	End: 60.8	End: 60.2
Barometric Pressure (in Hg)	Start: 764.1	Start: 764.2	Start: 764.2	Start: 764.2	Start: 764.0	Start: 764.1	Start: 764.0
	End: 767.0	End: 767.0	End: 767.0	End: 767.1	End: 767.1	End: 767.1	End: 767.1
Controller Flow Rate (mL/min)	10	10	10	10	10	10	10
COC Number	7391	7392	7390	7392	7390	7390	7392

Background Sample Information: Sample Name: — Location: —

Other weather conditions: P. Cloudy - Clear Breezy 60's to Start Wind Speed/Direction (Start): (17:15) 4-6 MPH ~305° NW

Wind Speed/Direction (specify interval): (17:30) 3-5MPH ≈ 336° NNW / (17:45) 1-3 MPH 340° NNW

Shipping Information: Shipping Method: JCO Drop Date Shipped: 4-12-10

Notes: IA-01 initial check 1206Am - 4.5", IA-02 1", IA-09 - 8" (0009), IA-03

COPYRIGHT© 2010 THE JOHNSON COMPANY, INC. DO NOT REPRODUCE OR DISTRIBUTE

THE JOHNSON COMPANY, INC.
100 State Street, Suite 600
Montpelier, Vermont 05602
(802) 229-4600

DRAFT

Ambient Air and Soil Vapor Sampling Form

Site Name: Unifirst, Woburn, MA Personnel: TRO/TEH JCO #: 1-2114-2

Canister Size: 6 L Barometer/Thermometer Source/ID: Air Velocity Meter - TSI 9555

Pressure Check: Summa Canister ID #: — Pressure Gauge Make/Model: Dwyer/DPGA-00-NIST (S/N-NV18020688)

Gauge Calibration Date: — *Pre-Sampling* Pressure Check: Location: Outside plant Inside gated parking lot Pressure Gauge Reading: —

Post-Sampling Pressure Check: Location: outside plant, inside gate. Pressure Gauge Reading: —

Sample ID	IA-15 0.5 ppm	IA-10A	IA-13 2.4 ppm (crash)	IA-Dup01 0.5	IA-13A 0.5	IA-11	IA-Dup02
Summa Canister ID (not barcode)	1626	1707	972	1614	609	983	618
Flow Controller #	002	356	277	309	183	349	047
Sampling Height (ft)	50"	47"	51"	51"	48"	51"	51"
Date	Start: 4/11/10	Start: 4/11/10	Start: 4/11/10	Start: 4/11/10	Start: 4/11/10	Start: 4/11/10	Start: 4/11/10
	End: 4/12/10	End: 4/12/10	End: 4/12/10	End: 4/12/10	End: 4/12/10	End: 4/12/10	End: 4/12/10
Time	Start: 18:09	Start: 18:40	Start: 18:44	Start: 18:54	Start: 18:44	Start: 18:46	Start: 18:56
	End: 0209	End: 0230	End: 0246	End: 0256	End: 0246	End: 0218	End: 0228
Flow Controller Vacuum (in Hg)	Start: -32"	Start: -31"	Start: -30	Start: -31	Start: -30	Start: 731"	Start: 751"
	End: -6"	End: -7"	End: -6"	End: -8"	End: -7"	End: -7"	End: -6"
Digital Pressure Gauge (in Hg)	Start: -30.0"	Start: -30"	Start: -30.1"	Start: 30.1"	Start: -30.1"	Start: -30.1"	Start: -28.8"
	End: -4.6"	End: -4.3"	End: -6.0"	End: -5.0"	End: -5.6"	End: -3.9"	End: -3.8"
Ambient Temperature (°F/°C)	Start: 65°	Start: 61.7	Start: 61.8	Start: 61.8	Start: 61.8	Start: 62.0	Start: 62.0
	End:	End: 60.2	End: 60.5	End: 60.5	End: 60.5	End: 60.3	End: 60.3
Barometric Pressure (in Hg)	Start: 764.1	Start: 764.0	Start: 764.0	Start: 764.0	Start: 764.0	Start: 764.0	Start: 764.0
	End:	End: 767.1	End: 767.2	End: 767.2	End: 767.2	End: 767.2	End: 767.2
Controller Flow Rate (mL/min)	10	10	10	10	10	10	10
COC Number	7391	7390	7391	7391	7392	7390	7390

Replicate Information: Original Sample Name: IA-11, IA-13 Replicate Name: IA-Dup02, IA-Dup01

Replicate Collection Method (Circle one): T-Connection or Side-by Side or Consecutive or Other (specify):

0200 Outside Ambient PID - range 0.4-0.9ppm
Inside Ambient PID range 0.5-0.6ppm Treatment Rm 0.5ppm

COPYRIGHT© 2010 THE JOHNSON COMPANY, INC. DO NOT REPRODUCE OR DISTRIBUTE

THE JOHNSON COMPANY, INC.
100 State Street, Suite 600
Montpelier, Vermont 05602
(802) 229-4600

DRAFT
unifirst woburn MA
1-2114-2

PID screening – Breathing Zone → 0.6ppm (crack 0.6ppm) 0.6ppm (crack 0.4ppm) 0.5ppm 0.7ppm 0.6ppm

Sample ID	IA-07	IA-05	IA-12	IA-06	IA-08	OA-01	OA-02
Summa Canister ID (not barcode)	1704	1836	785	639	584	782	1690
Flow Controller #	369	333	298	231	081	175	028
Sampling Height (ft)	48"	51"	48"	48"	52"	50"	50"
Date	Start: 4/11/10	Start: 4/11/10	Start: 4/11/10	Start: 4/11/10	Start: 4/11/10	Start: 4/11/10	Start: 4/11/10
	End: 4/12/10	End: 4/12/10	End: 4/12/10	End: 4/12/10	End: 4/12/10	End: 4/12/10	End: 4/12/10
Time	Start: 1904	Start: 1856	Start: 1858	Start: 19:00	Start: 1907	Start: 1801	Start: 1809
	End: 0236	End: 0206	End: 0258	End: 0230	End: 01:55	End: 0100	End: 0137
Flow Controller Vacuum (in Hg)	Start: -30"	Start: -30"	Start: -31"	Start: -29"	Start: -30"	Start: -28.5	Start: -30
	End: -6"	End: -6"	End: -6"	End: -6"	End: -6"	End: -6"	End: -10"
Digital Pressure Gauge (in Hg)	Start: -30.1"	Start: -30.1"	Start: -30.0"	Start: -30.1"	Start: -30.0"	Start: 29.4"	Start: 30.1"
	End: 6.5"	End: -6.7"	End: -4.8"	End: -5.4"	End: -6.4"	End: -6.3"	End: 5.0"
Ambient Temperature (°F) (~~°C~~)	Start: 61.7	Start: 61.9	Start: 61.8	Start: 62.1	Start: 65.1	Start: 68.8°	Start: 68.2
	End: 60.5	End: 60.3	End: 60.4	End: 60.4	End: 62.5	End: 48.2"	End: 46.5
Barometric Pressure (mm ~~in~~ Hg)	Start: 764.1	Start: 764.0	Start: 764.2	Start: 764.1	Start: 764.3	Start: 764.1	Start: 764.2
	End: 767.1	End: 767.2	End: 767.2	End: 767.3	End: 767.0	End: 766.6	End: 767.0
Controller Flow Rate (mL/min)	10	10	10	10	10	10	10
COC Number	7392	7391	7390	7391	7390	7391	7391

Background Sample Information: Sample Name: — Location: —

Other weather conditions: Clear/P.Cloudy Breezy 60's to start Wind Speed/Direction (Start): (17:15) 4-6 MPH ≈ 305° NW

Wind Speed/Direction (specify interval): 17:30 3-5 mph ≈ 336 NNW / 17:45 1-3 mph 340° NNW

Shipping Information: Shipping Method: _____ Date Shipped: _____

Notes: _____

COPYRIGHT© 2010 THE JOHNSON COMPANY, INC. DO NOT REPRODUCE OR DISTRIBUTE

THE JOHNSON COMPANY, INC.
100 State Street, Suite 600
Montpelier, Vermont 05602
(802) 229-4600

DRAFT

Ambient Air and Soil Vapor Sampling Form

Site Name: Unifirst Woburn, MA Personnel: TRO/TEH JCO #: 1-2114-2

Canister Size: 6 L Barometer/Thermometer Source/ID: Air Velocity Meter - TSI 9555

Pressure Check: Summa Canister ID #: — Pressure Gauge Make/Model: Dwyer / DPGA-00 · NIST (SN - NV1802062)

Gauge Calibration Date: — *Pre-Sampling* Pressure Check: Location: Inside gate/outside plant. Pressure Gauge Reading: —

Post-Sampling Pressure Check: Location: Inside gate, outside plant Pressure Gauge Reading: —

Sample ID	OA-DUP1	OA-03					
Summa Canister ID (not barcode)	1566	762					
Flow Controller #	262	253					
Sampling Height (ft)	50"	50"					
Date	Start: 4/11/10	Start: 4/11/10	Start:	Start:	Start:	Start:	Start:
	End: 4/12/10	End: 4/12/10	End:	End:	End:	End:	End:
Time	Start: 1819	Start: 1811	Start:	Start:	Start:	Start:	Start:
	End: 0149	End: 0212	End:	End:	End:	End:	End:
Flow Controller Vacuum (in Hg)	Start: -29	Start: -31	Start:	Start:	Start:	Start:	Start:
	End: -6"	End: -8"	End:	End:	End:	End:	End:
Digital Pressure Gauge (in Hg)	Start: -30.1"	Start: -30.1"	Start:	Start:	Start:	Start:	Start:
	End: -6.0"	End: -6.3"	End:	End:	End:	End:	End:
Ambient Temperature (°F) (°C)	Start: 68.2°	Start: 68.3	Start:	Start:	Start:	Start:	Start:
	End: 46.5°	End: 46.6°	End:	End:	End:	End:	End:
Barometric Pressure (in Hg)	Start: 764.2	Start: 764.0	Start:	Start:	Start:	Start:	Start:
	End: 767.0	End: 766.9	End:	End:	End:	End:	End:
Controller Flow Rate (mL/min)	10	10					
COC Number	7391	7390					

Replicate Information: Original Sample Name: OA-02 Replicate Name: OA-Dup1

Replicate Collection Method (Circle one): T-Connection or Side-by Side or Consecutive or Other (specify):

COPYRIGHT© 2010 THE JOHNSON COMPANY, INC. DO NOT REPRODUCE OR DISTRIBUTE

THE JOHNSON COMPANY, INC.
100 State Street, Suite 600
Montpelier, Vermont 05602
(802) 229-4600

DRAFT

Unifirst, Woburn 1-2114-2

	Setup 0325 PID - 0.6-0.9ppm	3:35 PID=0.6-0.9 ppm	3:50 PID 0.6-0.8	4:02 PID 0.6-0.7	4:18 PID 0.6-0.8	4:25 PID 0.6-0.9	4:07 PID 0.6-0.8ppm
Sample ID	SV-01	SV-02	SV-03	SV-04	SV-05	SV-06	SV-07
Summa Canister ID (not barcode)	696	1053	965	652	1520	1646	1628
Flow Controller #	303	269	367	466	463	090	360
Sampling Height (ft)	—	—	—	—	—	—	—
Date	Start: 4/12/10	Start: 4/12/10	Start: 4/12/10	Start: 4/12/10	Start: 4/12/10	Start: 4/12/10	Start: 4/12/10
	End: 4/12/10	End: 4/12/10	End: 4/12/10	End: 4/12/10	End: 4/12/10	End: 4/12/10	End: 4/12/10
Time	Start: 348	Start: 0354	Start: 0402	Start: 0415	Start: 0425	Start: 0435	Start: 0418
	End: 437	End: 0454	End: 0448	End: 0507	End: 0515	End: 0522	End: 0506
Flow Controller Vacuum (in Hg)	Start: 28.5	Start: -30	Start: -31"	Start: -30"	Start: -31"	Start: -30"	Start: -29"
	End: -3"	End: -28"	End: -6"	End: -5"	End: -6"	End: -6"	End: -5"
Digital Pressure Gauge (in Hg)	Start: -30.0	Start:	Start: -30.0"	Start: -30.0"	Start: -30.0"	Start: -29.6"	Start: -29.7"
	End: -4.8	End:	End: -5.4"	End: -3.8"	End: -2.7"	End: -4.8"	End: -2.9"
Ambient Temperature (°C)	Start: 59.5	Start: 59.9	Start: 60.6	Start: 60.8	Start: 60.3	Start: 60.4	Start: 60.5
	End: ~~59.5~~ TM 4/12/10	End:	End: —	End: —	End: —	End: —	End: —
Barometric Pressure (in Hg)	Start: 767.0	Start: 767.0	Start: 767.1	Start: 767.1	Start: 767.2	Start: 767.3	Start: 767.1
	End: ~~767.0~~ TM 4/12/10	End:	End: —	End: —	End: —	End: —	End: —
Controller Flow Rate (mL/min)	100	—	100	100	100	100	100
COC Number	7393	—	7392	7392	7393	7394	7391

Rec'd

Background Sample Information: Sample Name: — Location: —

Other weather conditions: Clear Calm 46° Wind Speed/Direction (Start): —

Wind Speed/Direction (specify interval): — / —

Shipping Information: Shipping Method: JCO Drop Date Shipped: 4/12/10

Notes:

COPYRIGHT© 2010 THE JOHNSON COMPANY, INC. DO NOT REPRODUCE OR DISTRIBUTE

THE JOHNSON COMPANY, INC.
100 State Street, Suite 600
Montpelier, Vermont 05602
(802) 229-4600

DRAFT

Ambient Air and Soil Vapor Sampling Form

Site Name: Unifirst Woburn MA Personnel: TRO/TEH JCO #: 1-2114-2

Canister Size: 6L Barometer/Thermometer Source/ID: Air Velocity Meter TSI-9555

Pressure Check: Summa Canister ID #: — Pressure Gauge Make/Model: Dwyer / DPGA-00-NIST (SN-NV1802069)

Gauge Calibration Date: — *Pre-Sampling* Pressure Check: Location: outside plant in Parking lot Pressure Gauge Reading: —

Post-Sampling Pressure Check: Location: outside Plant in Parking lot Pressure Gauge Reading: — 4:55 556 PID=0.5

3:42 PID 0.6-0.8 4:13 0.6 3:04 0.07 4:30 PID=0.6 0.7-0.9ppm

Sample ID	SV-08	SV-09	SV-10	SV-11	SV-12	SV-13	SV-14
Summa Canister ID (not barcode)	1576	1655	764	1556	956	1692	998
Flow Controller #	343	275	257	390	019	368	045
Sampling Height (ft)	—	—	—	—	—	—	—
Date	Start: 4/12/10	Start: 4/12/10	Start: 4/12/10	Start: 4/12/10	Start: 4/12/10	Start: 4/12/10	Start: 4/12/10
	End: 4/12/10	End: 4/12/10	End: 4/12/10	End: 4/12/10	End: 4/12/10	End: 4/12/10	End: 4/12/10
Time	Start: 0545	Start: 0359	Start: 0421	Start: 0512	Start: 0438	Start: 0504	Start: 0407
	End: 0632	End: 0447	End: 0514	End: 0602	End: 0524	End: 0549	End: 0455
Flow Controller Vacuum (in Hg)	Start: -28.5"	Start: -30"	Start: -31"	Start: -31"	Start: -29"	Start: -29"	Start: —
	End: -6"	End: -6"	End: -5"	End: -6"	End: -6"	End: -5"	End: —
Digital Pressure Gauge (in Hg)	Start: -29.9"	Start: -30.0"	Start: -30.0"	Start: -30.0"	Start: -30.0"	Start: -30.0"	Start: -30.0"
	End: -7.7"	End: -5.5"	End: -1.6"	End: -3.3"	End: -6.2"	End: -7.8"	End: -5.3"
Ambient Temperature (°C)	Start: 62.5	Start: 60.5	Start: 60.2	Start: 60.3	Start: 60.4	Start: 60.5	Start: 60.6
	End: —	End: —	End: —	End: —	End: —	End:	End: —
Barometric Pressure (in Hg)	Start: 767.0	Start: 767.0	Start: 767.1	Start: 767.2	Start: 767.2	Start: 767.2	Start: 767.1
	End: —	End: —	End: —	End: —	End: —	End:	End: —
Controller Flow Rate (mL/min)	100	100	100	100	100	100	100
COC Number	7394	7393	7393	7394	7393	7392	7392

Replicate Information: Original Sample Name: _____ Replicate Name: _____

Replicate Collection Method (Circle one): T-Connection or Side-by Side or Consecutive or Other (specify): _____

COPYRIGHT© 2010 THE JOHNSON COMPANY, INC. DO NOT REPRODUCE OR DISTRIBUTE

THE JOHNSON COMPANY, INC.
100 State Street, Suite 600
Montpelier, Vermont 05602
(802) 229-4600

DRAFT

Ambient Air and Soil Vapor Sampling Form

Site Name: Unifirst Woburn MA Personnel: TRO/TEH JCO #: 1-2114-2

Canister Size: 6L Barometer/Thermometer Source/ID: Air Velocity Meter TSI - 9555

Pressure Check: Summa Canister ID #: — Pressure Gauge Make/Model: Dwyer / DPGA-00 - NIST (SN-NV1802069)

Gauge Calibration Date: — *Pre-Sampling* Pressure Check: Location: outside Plant in Parking lot Pressure Gauge Reading: —

Post-Sampling Pressure Check: Location: outside Plant in Parking lot Pressure Gauge Reading: —

Sample ID	SV-15	SV-Dup03	SV-Dup02	SV-02 (Redone)			
Summa Canister ID (not barcode)	587	1706	1633	963			
Flow Controller #	465	291	208	451			
Sampling Height (ft)	—	—	—	—			
Date	Start: 4/12/10	Start: 4/12/10	Start: 4/12/10	Start: 4/12/10	Start:	Start:	Start:
	End: 4/12/10	End: 4/12/10	End: 4/12/10	End: 4/12/10	End:	End:	End:
Time	Start: 0540	Start: 0514	Start: 0522	Start: 0646	Start:	Start:	Start:
	End: 0626	End: 0559	End: 0612	End: 0755	End:	End:	End:
Flow Controller Vacuum (in Hg)	Start: -31"	Start: -29"	Start: -31"	Start: -28.5"	Start:	Start:	Start:
	End: -6"	End: -5"	End: -20"	End: -20"	End:	End:	End:
Digital Pressure Gauge (in Hg)	Start: -30.0"	Start: -30.0"	Start: -30.0"	Start: -30.0	Start:	Start:	Start:
	End: -6.1"	End: -4.8"	End: -17.4"	End: -21.7	End:	End:	End:
Ambient Temperature (°C)	Start: —	Start: 60.5	Start: ~~59.9~~ 60.3	Start: 59.9	Start:	Start:	Start:
	End: —	End: —	End: —	End: —	End:	End:	End:
Barometric Pressure (in Hg)	Start: —	Start: 767.2	Start: 767.2	Start: 767.0	Start:	Start:	Start:
	End: —	End: —	End: —	End: —	End:	End:	End:
Controller Flow Rate (mL/min)	100	100	100	100			
COC Number	7393	7392	7393	7394			

Replicate Information: Original Sample Name: _____ Replicate Name: _____

Replicate Collection Method (Circle one): T-Connection or Side-by Side or Consecutive or Other (specify): _____

COPYRIGHT© 2010 THE JOHNSON COMPANY, INC. DO NOT REPRODUCE OR DISTRIBUTE

CHAIN OF CUSTODY RECORD

L1005229- 7390

Client / Project Name	Project Location
UniFirst Property IAQ/VI Assessment	Woburn, MA

Project No.	Field Logbook No.
1-2114-2	Field Forms/Notes

Sampler: (Signature) [signature]

Chain of Custody Tape No. —

ANALYZES

Please Fax a copy to Bethna (802) 229-5876

	Sample No. / Identification	Date	Time	Lab Sample Number (*)		Type of Sample	TO-15 SIM	MA APH	Compound List for Woburn	Digital Pressure Gauge Reading - Leaving LAB	Digital Pressure Gauge Reading - Receipt at Site	Digital Pressure Gauge Reading - Leaving SITE	Digital Pressure Gauge Reading - Receipt at LAB	REMARKS
-1	IA-12	4/11-12/10	1858-0258	Can 785	FC 298	IA Ambient	X	X		-29.3	-30.0	-4.8	-4.3	Analyte List/QAPP
-2	IA-04	4/11-12/10	1835-0235	1559	074	Ambient	X	X		-29.3	-30.0	-2.6	-2.1	
-3	IA-14	4/11-12/10	1833-0140	945	256	Ambient	X	X		-29.3	-30.0	-5.6	-4.4	
-4	OA-03	4/11-12/10	1811-0212	762	233	Ambient	X	X		-29.3	-30.1	-6.3	-5.1	
-5	IA-10A	4/11-12/10	1840-0230	1707	356	Ambient	X	X		-29.3	-30.0	-4.3	-3.8	
-6	IA-11	4/11-12/10	1846-0218	983	344	Ambient	X	X		-29.3	-30.1	-3.9	-3.1	
-7	IA-Dup02	4/11-12/10	1856-0228	618	047	Ambient	X	X		-29.3	-29.8	-3.8	-3.2	
-8	IA-09	4/11-12/10	1829-0110	1667	379	Ambient	X	X		-29.3	-30.1	-5.5	-4.2	
-9	IA-08	4/11-12/10	1907-0155	584	081	Ambient	X	X		-29.3	-30.0	-6.4	-5.0	
				~~1036~~	~~333~~	~~Ambient~~ TICO 4/11/10				~~-29.3~~	~~-30.0~~			

Relinquished by: (Signature)	Date	Time	Received by: (Signature)	Date	Time
LAB to FIELD [signature] 4/11/10	4/11/10	1205	Receipt at Site [signature]	4/11/10	1205
Relinquished by: (Signature) FIELD to LAB [signature]	4/12/10	14:15	Received for Laboratory: (Signature) T Fley	4/12/10	1415
Sample Disposal Method: Ret. to Client			Disposed of by: (Signature)	Date	Time

SAMPLE COLLECTOR
Rec: P. Gilbert 4/12/10 14:55

100 State Street, Suite 600
Montpelier, VT 05602
(802) 229-4600
Fax (802) 229-5876
THE JOHNSON COMPANY, INC.
Environmental Sciences and Engineering

Rel: P. Gilbert 4/12/10 16:00 Rec'd [signature] 4/12/10 16:00

ANALYTICAL LABORATORY
Alpha Analytical, Inc.
Mansfield, MA

(*) = Canister ID / Flow controller Numbers

Shipper ID # JCO Drum

Barometric Pressure 4/8/10 - 29.75
4/9/10 29.67
4/11/10 30.11

WHITE - To accompany sample to the lab and returned to the Johnson Co. YELLOW - Lab copy PINK - Transporter copy GOLD - Sampler copy

Reorder from NEBS CUSTOM printing service 1-800-888-6327 NEBS, Inc. Petersborough, NH 03458 www.nebs.com

Ref. No: G 164100504

CHAIN OF CUSTODY RECORD

L1005229 7391

Client / Project Name	Project Location
Unifirst Property IAQ/VI Assessment	Woburn, MA
Project No. 1-2114-2	**Field Logbook No.** Field Forms/Notes
Sampler: (Signature)	**Chain of Custody Tape No.** —

ANALYZES

Please Fax a copy to Bettina (802) 229-5876

	Sample No. / Identification	Date	Time	Lab Sample Number (*)		Type of Sample	TO-15 SIM	MA APH	Compound List for Woburn	Digital Pressure Gauge Reading - Leaving LAB	Digital Pressure Gauge Reading - Receipt at SITE	Digital Pressure Gauge Reading - Leaving SITE	Digital Pressure Gauge Reading - Receipt at LAB	REMARKS
10	IA-05	4/11-12/10	1856-0206	Can 1036	FC 333	Ambient	X	X		-29.3	-30.1	-6.7	-5.6	Analyte List/QAPP
11	OA-01	4/11-12/10	1801-0100	782	175	Ambient	X	X		-29.3	-29.4	-6.3	-5.1	
12	SV-07	4/12/10	0418-0506	1628	360	Soil Vapor	X	X		-29.5	-29.7	-2.9	-2.7	
13	IA-13	4/11-12/10	1844-0246	972	277	Ambient	X	X		-29.3	-30.1	-6.0	-5.2	
14	OA-02	4/11-12/10	1809-0137	1690	028	Ambient	X	X		-29.3	-30.2	-5.7	-4.7	
15	IA-Dup 01	4/11/12/10	1854-0256	1614	309	Ambient	X	X		-29.3	-30.1	-5.0	-4.1	
16	IA-06	4/11-12/10	1900-0230	639	231	Ambient	X	X		-29.3	-30.1	-5.4	-4.8	
17	OA-DUP1	4/11-12/10	1819-0147	1566	262	Ambient	X	X		-29.3	-30.1	-6.0	-5.0	
18	IA-15	4/11-12/10	1809-0209	1626	002	Ambient	X	X		-29.3	-30.0	-4.6	-3.9	
19	IA-01	4/11-12/10	1825-0039	645	290	Ambient	X	X		-29.3	-30.2	-0.6	0.6	

	Date	Time		Date	Time
Relinquished by: (Signature) LAB to FIELD 4/11/10	4/11/10	1205	Received by: (Signature) Receipt at SITE	4/11/10	1205
Relinquished by: (Signature) FIELD to LAB	4/12/10	14:15	Received for Laboratory: (Signature)	4/12/10	1415
Sample Disposal Method: Relinquished			Disposed of by: (Signature)		

SAMPLE COLLECTOR: Rec: P. Gilbert 4/12/10 14:55

100 State Street, Suite 600
Montpelier, VT 05602
(802) 229-4600
Fax (802) 229-5876
THE JOHNSON COMPANY, INC.
Environmental Sciences and Engineering

Rel: P. Gilbert 4/12/10 16:00 Rec'd 4/12/10 1600

ANALYTICAL LABORATORY: Alpha Analytical, Inc. Mansfield, MA

(*) = Canister ID / Flow controller Numbers

Shipper ID # JCO Drop

WHITE - To accompany sample to the lab and returned to the Johnson Co. YELLOW - Lab copy PINK - Transporter copy GOLD - Sampler copy

Reorder From NEBS CUSTOM™ printing service 1-800-888-6327 NEBS, Inc. Peterborough, NH 03458 www.nebs.com

Ref. No: G 104100504

CHAIN OF CUSTODY RECORD

L1005229 7392

Client / Project Name	Project Location
Unifirst Property IAQ/VI Assessment	Woburn, MA
Project No. 1-2114-2	**Field Logbook No.** Field Forms / Notes
Sampler: (Signature)	**Chain of Custody Tape No.**

ANALYZES: Compound List for Woburn; TO-15 SIM; MA APH

Please Fax a copy to Bethina (802) 229-5876

	Sample No. / Identification	Date	Time	Lab Sample Number (*)		Type of Sample	TO-15 SIM	MA APH	Digital Pressure Gauge Reading - Leaving LAB	Digital Pressure Gauge Reading - Receipt at SITE	Digital Pressure Gauge Reading - Leaving SITE	Digital Pressure Gauge Reading - Receipt at LAB	REMARKS
20	IA-3A	4/11-12/10	1844-0246	Can 609	FC 183	Ambient	X	X	-29.3	-30.1	-5.6	-4.8	Analyte List / APH
21	IA-10	4/11-12/10	1840-0207	1676	205	Ambient	X	X	-29.3	-30.1	-4.1	-3.8	
22	IA-03	4/11-12/10	1831-0201	986	406	Ambient	X	X	-29.3	-30.1	-4.4	-3.2	
23	IA-07	4/11-12/10	1904-0236	1704	369	Ambient	X	X	-29.3	-30.1	-6.5	-5.4	
24	IA-02	4/11-12/10	1927-0222	944	242 1A	Ambient	X	X	-29.3	-30.1	-5.2	-4.2	
25	SV-04	4/12/10	0415-0507	652	466	Soil Vapor	X	X	-29.2	-30.0	-3.84	-2.4	
26	SV-14	4/12/10	0407-0455	998	045	Soil Vapor	X	X	-29.2	-30.0	-5.3	-3.9	
27	SV-Dup01	4/12/10	0514-0559	1706	291	Soil Vapor	X	X	-29.2	-30.0	-4.8	-4.6	
28	SV-13	4/12/10	0504-0549	1692	368	Soil Vapor	X	X	-29.2	-30.0	-7.8	-7.2	
29	SV-03	4/12/10	0402-0448	965	367	Soil Vapor	X	X	-29.2	-30.0	-5.41	-4.2	

	Date	Time		Date	Time
Relinquished by: (Signature) LAB to FIELD 4/11/10	4/11/10	1205	Received by: (Signature) Receipt at SITE	4/11/10	12:05
Relinquished by: (Signature) FIELD to LAB	4/12/10	14:15	Received for Laboratory: (Signature)	4/12/10	1415
~~Sample Disposal Method:~~ Relinquished			Disposed of by: (Signature)	Date	Time

SAMPLE COLLECTOR
Rec: P. Gilbert 4/12/10 14:55

100 State Street, Suite 600
Montpelier, VT 05602
(802) 229-4600
Fax (802) 229-5876
THE JOHNSON COMPANY, INC.
Environmental Sciences and Engineering

Rel: P. Gilbert 4/12/10 16:00 Rec'd 4/12/10 1600

ANALYTICAL LABORATORY
Alpha Analytical, Inc.
Mansfield, MA

(*) Canister ID / Flow Controller Numbers

Shipper ID # JCO Prop

WHITE - To accompany sample to the lab and returned to the Johnson Co. YELLOW - Lab copy PINK - Transporter copy GOLD - Sampler copy

Reorder From NEBS CUSTOM printing service 1-800-888-6307 NEBS, Inc. Peterborough, NH 03458 www.nebs.com

Ref. No. G 164100504

CHAIN OF CUSTODY RECORD

L1005229 7393

Client / Project Name	Project Location
UniFirst Property IAQ/VI Assessment	Woburn, MA
Project No.	**Field Logbook No.**
1-2114-2	Field Forms/Notes
Sampler: (Signature)	**Chain of Custody Tape No.**
[signature]	—

ANALYZES: Compound List for Woburn; Please Fax a Copy to Bethina (802)229-5876

	Sample No. / Identification	Date	Time	Lab Sample Number (*)	Type of Sample	TO-15 SIM	MA APH	Digital Pressure Gauge Reading - Leaving Site	Digital Pressure Gauge Reading - Receipt at Site	Digital Pressure Gauge Reading - Leaving Site	Digital Pressure Gauge Reading - Receipt at LAB	REMARKS
30	SV-15	4/12/10	0540-0626	Can 587 FC 465	Soil Vapor	X	X	-29.3	-30.0	-6.1	-5.6	Analyte List/QAPP
31	SV-12	4/12/10	0458-0524	956 019	Soil Vapor	X	X	-29.2	-30.0	-6.2	-5.6	↓ ↓
32	SV-05	4/12/10	0425-0515	1520 463	Soil Vapor	X	X	-29.2	-30.0	-2.7	-2.5	↓ ↓
33	SV-10	4/12/10	0421-0514	764 257	Soil Vapor	X	X	-29.2	-30.0	-1.6	-1.3	↓ ↓
42	—	—	—	1053 269	Soil Vapor			-29.2	-30.0	-28.4'		Faulty Regulator
34	SV-DUP02	4/12/10	0522-0612	1633 208	Soil Vapor	X	X	-29.2	-30.0	-17.4	-17.1	↓ ↓
35	SV-09	4/12/10	0359-0447	1655 275	Soil Vapor	X	X	-29.3	-30.0	-5.47	-4.1	↓ ↓
43	—	—	—	969 158	Soil Vapor			-29.2	-30.0			Extra
36	SV-01	4/12/10	0348-0437	696 303	Soil Vapor	X	X	-29.2	-30.0	-4.8	-3.5	↓ ↓
44	—	—	—	1562 166	Soil Vapor			-29.1	-29.9			Extra

Relinquished by: (Signature)	Date	Time	Received by: (Signature)	Date	Time
LAB to FIELD [signature] 4/11/10	4/11/10	1205	Receipt at SITE [signature]	4/11/10	12:05
Relinquished by: (Signature) ~~LAB~~ FIELD to LAB [signature]	4/12/10	14:15	Received for Laboratory: (Signature) [signature]	4/12/10	1415
~~Sample Disposal Method:~~ Ret. [signature]			Disposed of by: (Signature)	Date	Time

SAMPLE COLLECTOR
Reli P. Gilbert 4/12/10 14:55
100 State Street, Suite 600
Montpelier, VT 05602
(802) 229-4600
Fax (802) 229-5876
THE JOHNSON COMPANY, INC.
Environmental Sciences and Engineering
Reli P. Gilbert 4/12/10 16:00
Rec'd [signature] 4/14/10 1600

ANALYTICAL LABORATORY
Alpha Analytical, Inc.
Mansfield, MA

(*) = Canister ID / Flow Controller Numbers

Shipper ID # JCO Prop

WHITE - To accompany sample to the lab and returned to the Johnson Co. YELLOW - Lab copy PINK - Transporter copy GOLD - Sampler copy

Reorder From NEBS CUSTOM printing service 1-800-888-8327 NEBS, Inc. Petoborough, NH 03458 www.nebs.com

Ref. No: B 104100504

CHAIN OF CUSTODY RECORD

L1005229 7394

Client / Project Name	Project Location
UniFirst Property IAQ/VI Assessment	Woburn, MA
Project No. 1-2114-2	**Field Logbook No.** Field Forms / Notes
Sampler: (Signature)	**Chain of Custody Tape No.** —

ANALYZES: TO-15 SIM; Compound List for Woburn; AHA APH; Digital Pressure Gauge Reading - Leaving LAB; Digital Pressure Gauge Reading - Receipt at SITE; Digital Pressure Gauge Reading - Leaving SITE; Digital Pressure Gauge Reading - Receipt at LAB

Please Fax copy to Bettina (802) 229-5876

	Sample No. / Identification	Date	Time	Lab Sample Number (*)	Type of Sample	TO-15 SIM	AHA APH	Digital Pressure Gauge Reading - Leaving LAB	Digital Pressure Gauge Reading - Receipt at SITE	Digital Pressure Gauge Reading - Leaving SITE	Digital Pressure Gauge Reading - Receipt at LAB	REMARKS
7	SV-08 TEH	4/12/10 4/11-12/10	0545-0632	Can 1576 FC 343	Soil Vapor	X	X	-29.3	-29.9	-7.7	-6.6	Analyte List/QAP
8	Trip Blank	—	—	932 332	~~Soil~~ TEH 4/11/10	X	X	-29.2	-30.0	-30.3	-30.0	
9	SV-06	4/12/10	0435-0522	1646 090	Soil Vapor	X	X	-29.3	-29.6	-4.8	-4.6	
10	SV-02	4/12/10	0646-0755	963 451	Soil Vapor	X	X	-29.2	-30.0	-21.7	-21.1	
11	SV-11	4/12/10	0512-0602	1556 390	Soil Vapor	X	X	-29.3	-30.0	-3.3	-3.1	

Relinquished by: (Signature)	Date	Time	Received by: (Signature)	Date	Time
LAB to FIELD 4/11/10	4/11/10	1205	Receipt at SITE	4/11/10	1205
Relinquished by: (Signature) FIELD to LAB	4/12/10	14:15	Received for Laboratory: (Signature)	4/12/10	14:15
~~Sample Disposal Method:~~ Rel.			Disposed of by: (Signature)	Date	Time

SAMPLE COLLECTOR
Rec: P. Gillett 4/12/10 14:55

100 State Street, Suite 600
Montpelier, VT 05602
(802) 229-4600
Fax (802) 229-5876
THE JOHNSON COMPANY, INC.
Environmental Sciences and Engineering

Rel: P. Gillett 4/12/10 16:00 Rec'd 4/12/10 16:00

ANALYTICAL LABORATORY
Alpha Analytical, Inc.
Mansfield, MA

(*) = Canister ID / Flow Controller Numbers

Shipper ID # JCO Prop

WHITE - To accompany sample to the lab and returned to the Johnson Co. YELLOW - Lab copy PINK - Transporter copy GOLD - Sampler copy

Reorder From NEBS CUSTOM printing service 1-800-886-6327 NEBS, Inc. Peterborough, NH 03458 www.nebs.com

Ref. No. © 1041300504

1-2114-2

Canister and Flow controller certification Reports

04101021:12

ALPHA ANALYTICAL

ANALYTICAL REPORT

Lab Number:	L1004705
Client:	The Johnson Company, Inc 100 State Street Suite 600 Montpelier, VT 05602
ATTN:	Bettina Longino
Project Name:	UNIFIRST PROPERTY IA / VI
Project Number:	1-2114-2
Report Date:	04/10/10

Certifications & Approvals: MA (M-MA030), NY (11627), CT (PH-0141), NH (2206), NJ (MA015), RI (LAO00299), ME (MA0030), PA (Registration #68-02089), LA NELAC (03090), FL NELAC (E87814), US Army Corps of Engineers.

320 Forbes Boulevard, Mansfield, MA 02048-1806
508-822-9300 (Fax) 508-822-3288 800-624-9220 - www.alphalab.com

Project Name: UNIFIRST PROPERTY IA / VI
Project Number: 1-2114-2

Lab Number: L1004705
Report Date: 04/10/10

Alpha Sample ID	Client ID	Sample Location	Collection Date/Time
L1004705-01	CAN 652 FC 466	WOBURN, MA	04/01/10 00:00
L1004705-02	CAN 998 FC 045	WOBURN, MA	04/01/10 00:00
L1004705-03	CAN 1706 FC 291	WOBURN, MA	04/01/10 00:00
L1004705-04	CAN 1692 FC 368	WOBURN, MA	04/01/10 00:00
L1004705-05	CAN 965 FC 367	WOBURN, MA	04/01/10 00:00
L1004705-06	CAN 587 FC 465	WOBURN, MA	04/01/10 00:00
L1004705-07	CAN 956 FC 019	WOBURN, MA	04/01/10 00:00
L1004705-08	CAN 1520 FC 463	WOBURN, MA	04/01/10 00:00
L1004705-09	CAN 764 FC 257	WOBURN, MA	04/01/10 00:00
L1004705-10	CAN 1053 FC 269	WOBURN, MA	04/01/10 00:00
L1004705-11	CAN 1633 FC 208	WOBURN, MA	04/01/10 00:00
L1004705-12	CAN 1655 FC 275	WOBURN, MA	04/01/10 00:00
L1004705-13	CAN 969 FC 158	WOBURN, MA	04/01/10 00:00
L1004705-14	CAN 696 FC 303	WOBURN, MA	04/01/10 00:00
L1004705-15	CAN 1562 FC 166	WOBURN, MA	04/01/10 00:00
L1004705-16	CAN 1576 FC 343	WOBURN, MA	04/01/10 00:00
L1004705-17	CAN 932 FC 332	WOBURN, MA	04/01/10 00:00
L1004705-18	CAN 1646 FC 090	WOBURN, MA	04/01/10 00:00
L1004705-19	CAN 963 FC 451	WOBURN, MA	04/01/10 00:00
L1004705-20	CAN 1556 FC 390	WOBURN, MA	04/01/10 00:00

Project Name:	UNIFIRST PROPERTY IA / VI	**Lab Number:**	L1004705
Project Number:	1-2114-2	**Report Date:**	04/10/10

MADEP MCP Response Action Analytical Report Certification

This form provides certifications for all samples performed by MCP methods. Please refer to the Sample Results and Container Information sections of this report for specification of MCP methods used for each analysis. The following questions pertain only to MCP Analytical Methods.

An affirmative response to questions A, B, C & D is required for "Presumptive Certainty" status		
A	Were all samples received by the laboratory in a condition consistent with those described on their Chain-of-Custody documentation for the data set?	YES
B	Were all QA/QC procedures required for the specified analytical methods(s) included in this report followed, including the requirement to note and discuss in a narrative QC data that did not meet appropriate performance standards or guidelines?	YES
C	Does the analytical data included in this report meet all the requirements for "Presumptive Certainty", as described in section 2.0 of the MADEP document CAM VII A, "Quality Assurance and Quality Control Guidelines for the Acquisition and Reporting of Analytical Data"?	YES
D	VPH and EPH methods only: Was the VPH or EPH method run without significant modifications, as specified in Section 11.3?	N/A
A response to questions E and F is required for "Presumptive Certainty" status		
E	Were all QC performance standards and recommendations for the specified method(s) achieved?	YES
F	Were results for all analyte-list compounds/elements for the specified method(s) reported?	YES

For any questions answered "No", please refer to the case narrative section on the following page(s).

Please note that sample matrix information is located in the Sample Results section of this report.

Project Name: UNIFIRST PROPERTY IA / VI **Lab Number:** L1004705
Project Number: 1-2114-2 **Report Date:** 04/10/10

Case Narrative

The samples were received in accordance with the Chain of Custody and no significant deviations were encountered during the preparation or analysis unless otherwise noted. Sample Receipt, Container Information, and the Chain of Custody are located at the back of the report.

Results contained within this report relate only to the samples submitted under this Alpha Lab Number and meet all of the requirements of NELAC, for all NELAC accredited parameters. The data presented in this report is organized by parameter (i.e. VOC, SVOC, etc.). Sample specific Quality Control data (i.e. Surrogate Spike Recovery) is reported at the end of the target analyte list for each individual sample, followed by the Laboratory Batch Quality Control at the end of each parameter. If a sample was re-analyzed or re-extracted due to a required quality control corrective action and if both sets of data are reported, the Laboratory ID of the re-analysis or re-extraction is designated with an "R" or "RE", respectively. When multiple Batch Quality Control elements are reported (e.g. more than one LCS), the associated samples for each element are noted in the grey shaded header line of each data table. Any Laboratory Batch, Sample Specific % recovery or RPD value that is outside the listed Acceptance Criteria is bolded in the report. Definitions of all data qualifiers and acronyms used in this report are provided in the Glossary located at the back of the report.

Please see the associated ADEx data file for a comparison of laboratory reporting limits that were achieved with the regulatory Numerical Standards requested on the Chain of Custody.

For additional information, please contact Client Services at 800-624-9220.

Individual Canister and Flow Controller Certification.

Volatile Organics in Air (SIM)

1,2-Dibromoethane and Naphthalene were evaluated to 1/2 the RL and are 'J' qualified if the concentration is below the quantitation limit (RDL), but greater than or equal to 1/2 the RDL. Values are estimated.

MCP Related Narratives

Petroleum Hydrocarbons in Air

All MCP required questions were answered with affirmative responses; therefore, there are no relevant data issues to discuss.

The internal standards were within method criteria.

I, the undersigned, attest under the pains and penalties of perjury that, to the best of my knowledge and belief and based upon my personal inquiry of those responsible for providing the information contained in this analytical report, such information is accurate and complete. This certificate of analysis is not complete unless this page accompanies any and all pages of this report.

Authorized Signature: Kathleen M. O'Brien

Title: Technical Director/Representative Date: 04/10/10

AIR

Project Name: UNIFIRST PROPERTY IA / VI
Project Number: 1-2114-2

Lab Number: L1004705
Report Date: 04/10/10

SAMPLE RESULTS

Lab ID: L1004705-01
Client ID: CAN 652 FC 466
Sample Location: WOBURN, MA
Matrix: Air
Anaytical Method: 48,TO-15-SIM
Analytical Date: 04/08/10 15:51
Analyst: RY

Date Collected: 04/01/10 00:00
Date Received: 04/02/10
Field Prep: Not Specified

Parameter	ppbV Results	ppbV RDL	ug/m3 Results	ug/m3 RDL	Qualifier	Dilution Factor
Volatile Organics in Air by SIM - Mansfield Lab						
1,1,1-Trichloroethane	ND	0.020	ND	0.109		1
1,1,2-Trichloroethane	ND	0.020	ND	0.109		1
1,1-Dichloroethane	ND	0.020	ND	0.081		1
1,1-Dichloroethene	ND	0.020	ND	0.079		1
1,2,4-Trimethylbenzene	ND	0.020	ND	0.098		1
1,2-Dibromoethane	ND	0.020	ND	0.154		1
1,2-Dichloroethane	ND	0.020	ND	0.081		1
1,2-Dichloropropane	ND	0.020	ND	0.092		1
1,3-Butadiene	ND	0.020	ND	0.044		1
1,3-Dichlorobenzene	ND	0.020	ND	0.120		1
1,4-Dichlorobenzene	ND	0.020	ND	0.120		1
Benzene	ND	0.070	ND	0.223		1
Bromodichloromethane	ND	0.020	ND	0.134		1
Bromoform	ND	0.020	ND	0.206		1
Carbon tetrachloride	ND	0.020	ND	0.126		1
Chlorobenzene	ND	0.020	ND	0.092		1
Chloroform	ND	0.020	ND	0.098		1
cis-1,2-Dichloroethene	ND	0.020	ND	0.079		1
Ethylbenzene	ND	0.020	ND	0.087		1
Methylene chloride	ND	0.500	ND	1.74		1
Methyl tert butyl ether	ND	0.020	ND	0.072		1
Naphthalene	ND	0.050	ND	0.262		1
Xylenes, Total	ND	0.060	ND	0.260		1
Tetrachloroethene	ND	0.020	ND	0.136		1
Toluene	ND	0.050	ND	0.188		1

Project Name:	UNIFIRST PROPERTY IA / VI	**Lab Number:**	L1004705
Project Number:	1-2114-2	**Report Date:**	04/10/10

SAMPLE RESULTS

Lab ID:	L1004705-01	Date Collected:	04/01/10 00:00
Client ID:	CAN 652 FC 466	Date Received:	04/02/10
Sample Location:	WOBURN, MA	Field Prep:	Not Specified

Parameter	ppbV Results	ppbV RDL	ug/m3 Results	ug/m3 RDL	Qualifier	Dilution Factor
Volatile Organics in Air by SIM - Mansfield Lab						
trans-1,2-Dichloroethene	ND	0.020	ND	0.079		1
trans-1,3-Dichloropropene	ND	0.020	ND	0.091		1
Trichloroethene	ND	0.020	ND	0.107		1
Vinyl chloride	ND	0.020	ND	0.051		1
Isopropylbenzene	ND	0.500	ND	2.46		1

Project Name: UNIFIRST PROPERTY IA / VI
Project Number: 1-2114-2

Lab Number: L1004705
Report Date: 04/10/10

SAMPLE RESULTS

Lab ID: L1004705-02
Client ID: CAN 998 FC 045
Sample Location: WOBURN, MA
Matrix: Air
Anaytical Method: 48,TO-15-SIM
Analytical Date: 04/08/10 16:27
Analyst: RY

Date Collected: 04/01/10 00:00
Date Received: 04/02/10
Field Prep: Not Specified

Parameter	ppbV Results	ppbV RDL	ug/m3 Results	ug/m3 RDL	Qualifier	Dilution Factor
Volatile Organics in Air by SIM - Mansfield Lab						
1,1,1-Trichloroethane	ND	0.020	ND	0.109		1
1,1,2-Trichloroethane	ND	0.020	ND	0.109		1
1,1-Dichloroethane	ND	0.020	ND	0.081		1
1,1-Dichloroethene	ND	0.020	ND	0.079		1
1,2,4-Trimethylbenzene	ND	0.020	ND	0.098		1
1,2-Dibromoethane	ND	0.020	ND	0.154		1
1,2-Dichloroethane	ND	0.020	ND	0.081		1
1,2-Dichloropropane	ND	0.020	ND	0.092		1
1,3-Butadiene	ND	0.020	ND	0.044		1
1,3-Dichlorobenzene	ND	0.020	ND	0.120		1
1,4-Dichlorobenzene	ND	0.020	ND	0.120		1
Benzene	ND	0.070	ND	0.223		1
Bromodichloromethane	ND	0.020	ND	0.134		1
Bromoform	ND	0.020	ND	0.206		1
Carbon tetrachloride	ND	0.020	ND	0.126		1
Chlorobenzene	ND	0.020	ND	0.092		1
Chloroform	ND	0.020	ND	0.098		1
cis-1,2-Dichloroethene	ND	0.020	ND	0.079		1
Ethylbenzene	ND	0.020	ND	0.087		1
Methylene chloride	ND	0.500	ND	1.74		1
Methyl tert butyl ether	ND	0.020	ND	0.072		1
Naphthalene	ND	0.050	ND	0.262		1
Xylenes, Total	ND	0.060	ND	0.260		1
Tetrachloroethene	ND	0.020	ND	0.136		1
Toluene	ND	0.050	ND	0.188		1

Project Name: UNIFIRST PROPERTY IA / VI
Project Number: 1-2114-2

Lab Number: L1004705
Report Date: 04/10/10

SAMPLE RESULTS

Lab ID: L1004705-02
Client ID: CAN 998 FC 045
Sample Location: WOBURN, MA

Date Collected: 04/01/10 00:00
Date Received: 04/02/10
Field Prep: Not Specified

Parameter	ppbV Results	ppbV RDL	ug/m3 Results	ug/m3 RDL	Qualifier	Dilution Factor
Volatile Organics in Air by SIM - Mansfield Lab						
trans-1,2-Dichloroethene	ND	0.020	ND	0.079		1
trans-1,3-Dichloropropene	ND	0.020	ND	0.091		1
Trichloroethene	ND	0.020	ND	0.107		1
Vinyl chloride	ND	0.020	ND	0.051		1
Isopropylbenzene	ND	0.500	ND	2.46		1

Project Name: UNIFIRST PROPERTY IA / VI
Project Number: 1-2114-2

Lab Number: L1004705
Report Date: 04/10/10

SAMPLE RESULTS

Lab ID: L1004705-03
Client ID: CAN 1706 FC 291
Sample Location: WOBURN, MA
Matrix: Air
Anaytical Method: 48,TO-15-SIM
Analytical Date: 04/08/10 18:28
Analyst: RY

Date Collected: 04/01/10 00:00
Date Received: 04/02/10
Field Prep: Not Specified

Parameter	ppbV Results	ppbV RDL	ug/m3 Results	ug/m3 RDL	Qualifier	Dilution Factor
Volatile Organics in Air by SIM - Mansfield Lab						
1,1,1-Trichloroethane	ND	0.020	ND	0.109		1
1,1,2-Trichloroethane	ND	0.020	ND	0.109		1
1,1-Dichloroethane	ND	0.020	ND	0.081		1
1,1-Dichloroethene	ND	0.020	ND	0.079		1
1,2,4-Trimethylbenzene	ND	0.020	ND	0.098		1
1,2-Dibromoethane	ND	0.020	ND	0.154		1
1,2-Dichloroethane	ND	0.020	ND	0.081		1
1,2-Dichloropropane	ND	0.020	ND	0.092		1
1,3-Butadiene	ND	0.020	ND	0.044		1
1,3-Dichlorobenzene	ND	0.020	ND	0.120		1
1,4-Dichlorobenzene	ND	0.020	ND	0.120		1
Benzene	ND	0.070	ND	0.223		1
Bromodichloromethane	ND	0.020	ND	0.134		1
Bromoform	ND	0.020	ND	0.206		1
Carbon tetrachloride	ND	0.020	ND	0.126		1
Chlorobenzene	ND	0.020	ND	0.092		1
Chloroform	ND	0.020	ND	0.098		1
cis-1,2-Dichloroethene	ND	0.020	ND	0.079		1
Ethylbenzene	ND	0.020	ND	0.087		1
Methylene chloride	ND	0.500	ND	1.74		1
Methyl tert butyl ether	ND	0.020	ND	0.072		1
Naphthalene	ND	0.050	ND	0.262		1
Xylenes, Total	ND	0.060	ND	0.260		1
Tetrachloroethene	ND	0.020	ND	0.136		1
Toluene	ND	0.050	ND	0.188		1

Project Name: UNIFIRST PROPERTY IA / VI
Project Number: 1-2114-2

Lab Number: L1004705
Report Date: 04/10/10

SAMPLE RESULTS

Lab ID: L1004705-03
Client ID: CAN 1706 FC 291
Sample Location: WOBURN, MA

Date Collected: 04/01/10 00:00
Date Received: 04/02/10
Field Prep: Not Specified

Parameter	ppbV Results	ppbV RDL	ug/m3 Results	ug/m3 RDL	Qualifier	Dilution Factor
Volatile Organics in Air by SIM - Mansfield Lab						
trans-1,2-Dichloroethene	ND	0.020	ND	0.079		1
trans-1,3-Dichloropropene	ND	0.020	ND	0.091		1
Trichloroethene	ND	0.020	ND	0.107		1
Vinyl chloride	ND	0.020	ND	0.051		1
Isopropylbenzene	ND	0.500	ND	2.46		1

Project Name: UNIFIRST PROPERTY IA / VI
Project Number: 1-2114-2

Lab Number: L1004705
Report Date: 04/10/10

SAMPLE RESULTS

Lab ID: L1004705-04
Client ID: CAN 1692 FC 368
Sample Location: WOBURN, MA
Matrix: Air
Anaytical Method: 48,TO-15-SIM
Analytical Date: 04/08/10 17:01
Analyst: RY

Date Collected: 04/01/10 00:00
Date Received: 04/02/10
Field Prep: Not Specified

Parameter	ppbV Results	ppbV RDL	ug/m3 Results	ug/m3 RDL	Qualifier	Dilution Factor
Volatile Organics in Air by SIM - Mansfield Lab						
1,1,1-Trichloroethane	ND	0.020	ND	0.109		1
1,1,2-Trichloroethane	ND	0.020	ND	0.109		1
1,1-Dichloroethane	ND	0.020	ND	0.081		1
1,1-Dichloroethene	ND	0.020	ND	0.079		1
1,2,4-Trimethylbenzene	ND	0.020	ND	0.098		1
1,2-Dibromoethane	ND	0.020	ND	0.154		1
1,2-Dichloroethane	ND	0.020	ND	0.081		1
1,2-Dichloropropane	ND	0.020	ND	0.092		1
1,3-Butadiene	ND	0.020	ND	0.044		1
1,3-Dichlorobenzene	ND	0.020	ND	0.120		1
1,4-Dichlorobenzene	ND	0.020	ND	0.120		1
Benzene	ND	0.070	ND	0.223		1
Bromodichloromethane	ND	0.020	ND	0.134		1
Bromoform	ND	0.020	ND	0.206		1
Carbon tetrachloride	ND	0.020	ND	0.126		1
Chlorobenzene	ND	0.020	ND	0.092		1
Chloroform	ND	0.020	ND	0.098		1
cis-1,2-Dichloroethene	ND	0.020	ND	0.079		1
Ethylbenzene	ND	0.020	ND	0.087		1
Methylene chloride	ND	0.500	ND	1.74		1
Methyl tert butyl ether	ND	0.020	ND	0.072		1
Naphthalene	ND	0.050	ND	0.262		1
Xylenes, Total	ND	0.060	ND	0.260		1
Tetrachloroethene	ND	0.020	ND	0.136		1
Toluene	ND	0.050	ND	0.188		1

Project Name: UNIFIRST PROPERTY IA / VI
Project Number: 1-2114-2

Lab Number: L1004705
Report Date: 04/10/10

SAMPLE RESULTS

Lab ID: L1004705-04
Client ID: CAN 1692 FC 368
Sample Location: WOBURN, MA

Date Collected: 04/01/10 00:00
Date Received: 04/02/10
Field Prep: Not Specified

Parameter	ppbV Results	ppbV RDL	ug/m3 Results	ug/m3 RDL	Qualifier	Dilution Factor
Volatile Organics in Air by SIM - Mansfield Lab						
trans-1,2-Dichloroethene	ND	0.020	ND	0.079		1
trans-1,3-Dichloropropene	ND	0.020	ND	0.091		1
Trichloroethene	ND	0.020	ND	0.107		1
Vinyl chloride	ND	0.020	ND	0.051		1
Isopropylbenzene	ND	0.500	ND	2.46		1

Project Name: UNIFIRST PROPERTY IA / VI
Project Number: 1-2114-2

Lab Number: L1004705
Report Date: 04/10/10

SAMPLE RESULTS

Lab ID: L1004705-05
Client ID: CAN 965 FC 367
Sample Location: WOBURN, MA
Matrix: Air
Anaytical Method: 48,TO-15-SIM
Analytical Date: 04/08/10 17:35
Analyst: RY

Date Collected: 04/01/10 00:00
Date Received: 04/02/10
Field Prep: Not Specified

Parameter	ppbV Results	ppbV RDL	ug/m3 Results	ug/m3 RDL	Qualifier	Dilution Factor
Volatile Organics in Air by SIM - Mansfield Lab						
1,1,1-Trichloroethane	ND	0.020	ND	0.109		1
1,1,2-Trichloroethane	ND	0.020	ND	0.109		1
1,1-Dichloroethane	ND	0.020	ND	0.081		1
1,1-Dichloroethene	ND	0.020	ND	0.079		1
1,2,4-Trimethylbenzene	ND	0.020	ND	0.098		1
1,2-Dibromoethane	ND	0.020	ND	0.154		1
1,2-Dichloroethane	ND	0.020	ND	0.081		1
1,2-Dichloropropane	ND	0.020	ND	0.092		1
1,3-Butadiene	ND	0.020	ND	0.044		1
1,3-Dichlorobenzene	ND	0.020	ND	0.120		1
1,4-Dichlorobenzene	ND	0.020	ND	0.120		1
Benzene	ND	0.070	ND	0.223		1
Bromodichloromethane	ND	0.020	ND	0.134		1
Bromoform	ND	0.020	ND	0.206		1
Carbon tetrachloride	ND	0.020	ND	0.126		1
Chlorobenzene	ND	0.020	ND	0.092		1
Chloroform	ND	0.020	ND	0.098		1
cis-1,2-Dichloroethene	ND	0.020	ND	0.079		1
Ethylbenzene	ND	0.020	ND	0.087		1
Methylene chloride	ND	0.500	ND	1.74		1
Methyl tert butyl ether	ND	0.020	ND	0.072		1
Naphthalene	ND	0.050	ND	0.262		1
Xylenes, Total	ND	0.060	ND	0.260		1
Tetrachloroethene	ND	0.020	ND	0.136		1
Toluene	ND	0.050	ND	0.188		1

Project Name: UNIFIRST PROPERTY IA / VI
Project Number: 1-2114-2

Lab Number: L1004705
Report Date: 04/10/10

SAMPLE RESULTS

Lab ID: L1004705-05
Client ID: CAN 965 FC 367
Sample Location: WOBURN, MA

Date Collected: 04/01/10 00:00
Date Received: 04/02/10
Field Prep: Not Specified

Parameter	ppbV Results	ppbV RDL	ug/m3 Results	ug/m3 RDL	Qualifier	Dilution Factor
Volatile Organics in Air by SIM - Mansfield Lab						
trans-1,2-Dichloroethene	ND	0.020	ND	0.079		1
trans-1,3-Dichloropropene	ND	0.020	ND	0.091		1
Trichloroethene	ND	0.020	ND	0.107		1
Vinyl chloride	ND	0.020	ND	0.051		1
Isopropylbenzene	ND	0.500	ND	2.46		1

Project Name: UNIFIRST PROPERTY IA / VI
Project Number: 1-2114-2

Lab Number: L1004705
Report Date: 04/10/10

SAMPLE RESULTS

Lab ID: L1004705-06
Client ID: CAN 587 FC 465
Sample Location: WOBURN, MA
Matrix: Air
Anaytical Method: 48,TO-15-SIM
Analytical Date: 04/08/10 19:03
Analyst: RY

Date Collected: 04/01/10 00:00
Date Received: 04/02/10
Field Prep: Not Specified

Parameter	ppbV Results	ppbV RDL	ug/m3 Results	ug/m3 RDL	Qualifier	Dilution Factor
Volatile Organics in Air by SIM - Mansfield Lab						
1,1,1-Trichloroethane	ND	0.020	ND	0.109		1
1,1,2-Trichloroethane	ND	0.020	ND	0.109		1
1,1-Dichloroethane	ND	0.020	ND	0.081		1
1,1-Dichloroethene	ND	0.020	ND	0.079		1
1,2,4-Trimethylbenzene	ND	0.020	ND	0.098		1
1,2-Dibromoethane	ND	0.020	ND	0.154		1
1,2-Dichloroethane	ND	0.020	ND	0.081		1
1,2-Dichloropropane	ND	0.020	ND	0.092		1
1,3-Butadiene	ND	0.020	ND	0.044		1
1,3-Dichlorobenzene	ND	0.020	ND	0.120		1
1,4-Dichlorobenzene	ND	0.020	ND	0.120		1
Benzene	ND	0.070	ND	0.223		1
Bromodichloromethane	ND	0.020	ND	0.134		1
Bromoform	ND	0.020	ND	0.206		1
Carbon tetrachloride	ND	0.020	ND	0.126		1
Chlorobenzene	ND	0.020	ND	0.092		1
Chloroform	ND	0.020	ND	0.098		1
cis-1,2-Dichloroethene	ND	0.020	ND	0.079		1
Ethylbenzene	ND	0.020	ND	0.087		1
Methylene chloride	ND	0.500	ND	1.74		1
Methyl tert butyl ether	ND	0.020	ND	0.072		1
Naphthalene	ND	0.050	ND	0.262		1
Xylenes, Total	ND	0.060	ND	0.260		1
Tetrachloroethene	ND	0.020	ND	0.136		1
Toluene	ND	0.050	ND	0.188		1

Project Name: UNIFIRST PROPERTY IA / VI
Project Number: 1-2114-2

Lab Number: L1004705
Report Date: 04/10/10

SAMPLE RESULTS

Lab ID: L1004705-06
Client ID: CAN 587 FC 465
Sample Location: WOBURN, MA

Date Collected: 04/01/10 00:00
Date Received: 04/02/10
Field Prep: Not Specified

Parameter	ppbV Results	ppbV RDL	ug/m3 Results	ug/m3 RDL	Qualifier	Dilution Factor
Volatile Organics in Air by SIM - Mansfield Lab						
trans-1,2-Dichloroethene	ND	0.020	ND	0.079		1
trans-1,3-Dichloropropene	ND	0.020	ND	0.091		1
Trichloroethene	ND	0.020	ND	0.107		1
Vinyl chloride	ND	0.020	ND	0.051		1
Isopropylbenzene	ND	0.500	ND	2.46		1

Project Name: UNIFIRST PROPERTY IA / VI
Project Number: 1-2114-2

Lab Number: L1004705
Report Date: 04/10/10

SAMPLE RESULTS

Lab ID: L1004705-07
Client ID: CAN 956 FC 019
Sample Location: WOBURN, MA
Matrix: Air
Anaytical Method: 48,TO-15-SIM
Analytical Date: 04/08/10 19:38
Analyst: RY

Date Collected: 04/01/10 00:00
Date Received: 04/02/10
Field Prep: Not Specified

Parameter	ppbV Results	ppbV RDL	ug/m3 Results	ug/m3 RDL	Qualifier	Dilution Factor
Volatile Organics in Air by SIM - Mansfield Lab						
1,1,1-Trichloroethane	ND	0.020	ND	0.109		1
1,1,2-Trichloroethane	ND	0.020	ND	0.109		1
1,1-Dichloroethane	ND	0.020	ND	0.081		1
1,1-Dichloroethene	ND	0.020	ND	0.079		1
1,2,4-Trimethylbenzene	ND	0.020	ND	0.098		1
1,2-Dibromoethane	ND	0.020	ND	0.154		1
1,2-Dichloroethane	ND	0.020	ND	0.081		1
1,2-Dichloropropane	ND	0.020	ND	0.092		1
1,3-Butadiene	ND	0.020	ND	0.044		1
1,3-Dichlorobenzene	ND	0.020	ND	0.120		1
1,4-Dichlorobenzene	ND	0.020	ND	0.120		1
Benzene	ND	0.070	ND	0.223		1
Bromodichloromethane	ND	0.020	ND	0.134		1
Bromoform	ND	0.020	ND	0.206		1
Carbon tetrachloride	ND	0.020	ND	0.126		1
Chlorobenzene	ND	0.020	ND	0.092		1
Chloroform	ND	0.020	ND	0.098		1
cis-1,2-Dichloroethene	ND	0.020	ND	0.079		1
Ethylbenzene	ND	0.020	ND	0.087		1
Methylene chloride	ND	0.500	ND	1.74		1
Methyl tert butyl ether	ND	0.020	ND	0.072		1
Naphthalene	ND	0.050	ND	0.262		1
Xylenes, Total	ND	0.060	ND	0.260		1
Tetrachloroethene	ND	0.020	ND	0.136		1
Toluene	ND	0.050	ND	0.188		1

Project Name: UNIFIRST PROPERTY IA / VI
Project Number: 1-2114-2

Lab Number: L1004705
Report Date: 04/10/10

SAMPLE RESULTS

Lab ID: L1004705-07
Client ID: CAN 956 FC 019
Sample Location: WOBURN, MA

Date Collected: 04/01/10 00:00
Date Received: 04/02/10
Field Prep: Not Specified

Parameter	ppbV Results	ppbV RDL	ug/m3 Results	ug/m3 RDL	Qualifier	Dilution Factor
Volatile Organics in Air by SIM - Mansfield Lab						
trans-1,2-Dichloroethene	ND	0.020	ND	0.079		1
trans-1,3-Dichloropropene	ND	0.020	ND	0.091		1
Trichloroethene	ND	0.020	ND	0.107		1
Vinyl chloride	ND	0.020	ND	0.051		1
Isopropylbenzene	ND	0.500	ND	2.46		1

Project Name: UNIFIRST PROPERTY IA / VI
Project Number: 1-2114-2

Lab Number: L1004705
Report Date: 04/10/10

SAMPLE RESULTS

Lab ID: L1004705-08
Client ID: CAN 1520 FC 463
Sample Location: WOBURN, MA
Matrix: Air
Anaytical Method: 48,TO-15-SIM
Analytical Date: 04/08/10 20:13
Analyst: RY

Date Collected: 04/01/10 00:00
Date Received: 04/02/10
Field Prep: Not Specified

Parameter	ppbV Results	ppbV RDL	ug/m3 Results	ug/m3 RDL	Qualifier	Dilution Factor
Volatile Organics in Air by SIM - Mansfield Lab						
1,1,1-Trichloroethane	ND	0.020	ND	0.109		1
1,1,2-Trichloroethane	ND	0.020	ND	0.109		1
1,1-Dichloroethane	ND	0.020	ND	0.081		1
1,1-Dichloroethene	ND	0.020	ND	0.079		1
1,2,4-Trimethylbenzene	ND	0.020	ND	0.098		1
1,2-Dibromoethane	ND	0.020	ND	0.154		1
1,2-Dichloroethane	ND	0.020	ND	0.081		1
1,2-Dichloropropane	ND	0.020	ND	0.092		1
1,3-Butadiene	ND	0.020	ND	0.044		1
1,3-Dichlorobenzene	ND	0.020	ND	0.120		1
1,4-Dichlorobenzene	ND	0.020	ND	0.120		1
Benzene	ND	0.070	ND	0.223		1
Bromodichloromethane	ND	0.020	ND	0.134		1
Bromoform	ND	0.020	ND	0.206		1
Carbon tetrachloride	ND	0.020	ND	0.126		1
Chlorobenzene	ND	0.020	ND	0.092		1
Chloroform	ND	0.020	ND	0.098		1
cis-1,2-Dichloroethene	ND	0.020	ND	0.079		1
Ethylbenzene	ND	0.020	ND	0.087		1
Methylene chloride	ND	0.500	ND	1.74		1
Methyl tert butyl ether	ND	0.020	ND	0.072		1
Naphthalene	ND	0.050	ND	0.262		1
Xylenes, Total	ND	0.060	ND	0.260		1
Tetrachloroethene	ND	0.020	ND	0.136		1
Toluene	ND	0.050	ND	0.188		1

Project Name: UNIFIRST PROPERTY IA / VI
Project Number: 1-2114-2
Lab Number: L1004705
Report Date: 04/10/10

SAMPLE RESULTS

Lab ID: L1004705-08
Client ID: CAN 1520 FC 463
Sample Location: WOBURN, MA
Date Collected: 04/01/10 00:00
Date Received: 04/02/10
Field Prep: Not Specified

Parameter	ppbV Results	ppbV RDL	ug/m3 Results	ug/m3 RDL	Qualifier	Dilution Factor
Volatile Organics in Air by SIM - Mansfield Lab						
trans-1,2-Dichloroethene	ND	0.020	ND	0.079		1
trans-1,3-Dichloropropene	ND	0.020	ND	0.091		1
Trichloroethene	ND	0.020	ND	0.107		1
Vinyl chloride	ND	0.020	ND	0.051		1
Isopropylbenzene	ND	0.500	ND	2.46		1

Project Name: UNIFIRST PROPERTY IA / VI
Project Number: 1-2114-2

Lab Number: L1004705
Report Date: 04/10/10

SAMPLE RESULTS

Lab ID: L1004705-09
Client ID: CAN 764 FC 257
Sample Location: WOBURN, MA
Matrix: Air
Anaytical Method: 48,TO-15-SIM
Analytical Date: 04/08/10 20:48
Analyst: RY

Date Collected: 04/01/10 00:00
Date Received: 04/02/10
Field Prep: Not Specified

Parameter	ppbV Results	ppbV RDL	ug/m3 Results	ug/m3 RDL	Qualifier	Dilution Factor
Volatile Organics in Air by SIM - Mansfield Lab						
1,1,1-Trichloroethane	ND	0.020	ND	0.109		1
1,1,2-Trichloroethane	ND	0.020	ND	0.109		1
1,1-Dichloroethane	ND	0.020	ND	0.081		1
1,1-Dichloroethene	ND	0.020	ND	0.079		1
1,2,4-Trimethylbenzene	ND	0.020	ND	0.098		1
1,2-Dibromoethane	ND	0.020	ND	0.154		1
1,2-Dichloroethane	ND	0.020	ND	0.081		1
1,2-Dichloropropane	ND	0.020	ND	0.092		1
1,3-Butadiene	ND	0.020	ND	0.044		1
1,3-Dichlorobenzene	ND	0.020	ND	0.120		1
1,4-Dichlorobenzene	ND	0.020	ND	0.120		1
Benzene	ND	0.070	ND	0.223		1
Bromodichloromethane	ND	0.020	ND	0.134		1
Bromoform	ND	0.020	ND	0.206		1
Carbon tetrachloride	ND	0.020	ND	0.126		1
Chlorobenzene	ND	0.020	ND	0.092		1
Chloroform	ND	0.020	ND	0.098		1
cis-1,2-Dichloroethene	ND	0.020	ND	0.079		1
Ethylbenzene	ND	0.020	ND	0.087		1
Methylene chloride	ND	0.500	ND	1.74		1
Methyl tert butyl ether	ND	0.020	ND	0.072		1
Naphthalene	ND	0.050	ND	0.262		1
Xylenes, Total	ND	0.060	ND	0.260		1
Tetrachloroethene	ND	0.020	ND	0.136		1
Toluene	ND	0.050	ND	0.188		1

Project Name: UNIFIRST PROPERTY IA / VI
Project Number: 1-2114-2

Lab Number: L1004705
Report Date: 04/10/10

SAMPLE RESULTS

Lab ID: L1004705-09
Client ID: CAN 764 FC 257
Sample Location: WOBURN, MA

Date Collected: 04/01/10 00:00
Date Received: 04/02/10
Field Prep: Not Specified

Parameter	ppbV Results	ppbV RDL	ug/m3 Results	ug/m3 RDL	Qualifier	Dilution Factor
Volatile Organics in Air by SIM - Mansfield Lab						
trans-1,2-Dichloroethene	ND	0.020	ND	0.079		1
trans-1,3-Dichloropropene	ND	0.020	ND	0.091		1
Trichloroethene	ND	0.020	ND	0.107		1
Vinyl chloride	ND	0.020	ND	0.051		1
Isopropylbenzene	ND	0.500	ND	2.46		1

Project Name: UNIFIRST PROPERTY IA / VI
Project Number: 1-2114-2

Lab Number: L1004705
Report Date: 04/10/10

SAMPLE RESULTS

Lab ID: L1004705-10
Client ID: CAN 1053 FC 269
Sample Location: WOBURN, MA
Matrix: Air
Anaytical Method: 48,TO-15-SIM
Analytical Date: 04/08/10 21:24
Analyst: RY

Date Collected: 04/01/10 00:00
Date Received: 04/02/10
Field Prep: Not Specified

Parameter	ppbV Results	ppbV RDL	ug/m3 Results	ug/m3 RDL	Qualifier	Dilution Factor
Volatile Organics in Air by SIM - Mansfield Lab						
1,1,1-Trichloroethane	ND	0.020	ND	0.109		1
1,1,2-Trichloroethane	ND	0.020	ND	0.109		1
1,1-Dichloroethane	ND	0.020	ND	0.081		1
1,1-Dichloroethene	ND	0.020	ND	0.079		1
1,2,4-Trimethylbenzene	ND	0.020	ND	0.098		1
1,2-Dibromoethane	ND	0.020	ND	0.154		1
1,2-Dichloroethane	ND	0.020	ND	0.081		1
1,2-Dichloropropane	ND	0.020	ND	0.092		1
1,3-Butadiene	ND	0.020	ND	0.044		1
1,3-Dichlorobenzene	ND	0.020	ND	0.120		1
1,4-Dichlorobenzene	ND	0.020	ND	0.120		1
Benzene	ND	0.070	ND	0.223		1
Bromodichloromethane	ND	0.020	ND	0.134		1
Bromoform	ND	0.020	ND	0.206		1
Carbon tetrachloride	ND	0.020	ND	0.126		1
Chlorobenzene	ND	0.020	ND	0.092		1
Chloroform	ND	0.020	ND	0.098		1
cis-1,2-Dichloroethene	ND	0.020	ND	0.079		1
Ethylbenzene	ND	0.020	ND	0.087		1
Methylene chloride	ND	0.500	ND	1.74		1
Methyl tert butyl ether	ND	0.020	ND	0.072		1
Naphthalene	ND	0.050	ND	0.262		1
Xylenes, Total	ND	0.060	ND	0.260		1
Tetrachloroethene	ND	0.020	ND	0.136		1
Toluene	ND	0.050	ND	0.188		1

Project Name: UNIFIRST PROPERTY IA / VI
Project Number: 1-2114-2

Lab Number: L1004705
Report Date: 04/10/10

SAMPLE RESULTS

Lab ID: L1004705-10
Client ID: CAN 1053 FC 269
Sample Location: WOBURN, MA

Date Collected: 04/01/10 00:00
Date Received: 04/02/10
Field Prep: Not Specified

Parameter	ppbV Results	ppbV RDL	ug/m3 Results	ug/m3 RDL	Qualifier	Dilution Factor
Volatile Organics in Air by SIM - Mansfield Lab						
trans-1,2-Dichloroethene	ND	0.020	ND	0.079		1
trans-1,3-Dichloropropene	ND	0.020	ND	0.091		1
Trichloroethene	ND	0.020	ND	0.107		1
Vinyl chloride	ND	0.020	ND	0.051		1
Isopropylbenzene	ND	0.500	ND	2.46		1

Project Name: UNIFIRST PROPERTY IA / VI
Project Number: 1-2114-2

Lab Number: L1004705
Report Date: 04/10/10

SAMPLE RESULTS

Lab ID: L1004705-11
Client ID: CAN 1633 FC 208
Sample Location: WOBURN, MA
Matrix: Air
Anaytical Method: 48,TO-15-SIM
Analytical Date: 04/08/10 21:58
Analyst: RY

Date Collected: 04/01/10 00:00
Date Received: 04/02/10
Field Prep: Not Specified

Parameter	ppbV Results	ppbV RDL	ug/m3 Results	ug/m3 RDL	Qualifier	Dilution Factor
Volatile Organics in Air by SIM - Mansfield Lab						
1,1,1-Trichloroethane	ND	0.020	ND	0.109		1
1,1,2-Trichloroethane	ND	0.020	ND	0.109		1
1,1-Dichloroethane	ND	0.020	ND	0.081		1
1,1-Dichloroethene	ND	0.020	ND	0.079		1
1,2,4-Trimethylbenzene	ND	0.020	ND	0.098		1
1,2-Dibromoethane	ND	0.020	ND	0.154		1
1,2-Dichloroethane	ND	0.020	ND	0.081		1
1,2-Dichloropropane	ND	0.020	ND	0.092		1
1,3-Butadiene	ND	0.020	ND	0.044		1
1,3-Dichlorobenzene	ND	0.020	ND	0.120		1
1,4-Dichlorobenzene	ND	0.020	ND	0.120		1
Benzene	ND	0.070	ND	0.223		1
Bromodichloromethane	ND	0.020	ND	0.134		1
Bromoform	ND	0.020	ND	0.206		1
Carbon tetrachloride	ND	0.020	ND	0.126		1
Chlorobenzene	ND	0.020	ND	0.092		1
Chloroform	ND	0.020	ND	0.098		1
cis-1,2-Dichloroethene	ND	0.020	ND	0.079		1
Ethylbenzene	ND	0.020	ND	0.087		1
Methylene chloride	ND	0.500	ND	1.74		1
Methyl tert butyl ether	ND	0.020	ND	0.072		1
Naphthalene	ND	0.050	ND	0.262		1
Xylenes, Total	ND	0.060	ND	0.260		1
Tetrachloroethene	ND	0.020	ND	0.136		1
Toluene	ND	0.050	ND	0.188		1

Project Name: UNIFIRST PROPERTY IA / VI
Project Number: 1-2114-2

Lab Number: L1004705
Report Date: 04/10/10

SAMPLE RESULTS

Lab ID: L1004705-11
Client ID: CAN 1633 FC 208
Sample Location: WOBURN, MA

Date Collected: 04/01/10 00:00
Date Received: 04/02/10
Field Prep: Not Specified

Parameter	ppbV Results	ppbV RDL	ug/m3 Results	ug/m3 RDL	Qualifier	Dilution Factor
Volatile Organics in Air by SIM - Mansfield Lab						
trans-1,2-Dichloroethene	ND	0.020	ND	0.079		1
trans-1,3-Dichloropropene	ND	0.020	ND	0.091		1
Trichloroethene	ND	0.020	ND	0.107		1
Vinyl chloride	ND	0.020	ND	0.051		1
Isopropylbenzene	ND	0.500	ND	2.46		1

Project Name: UNIFIRST PROPERTY IA / VI
Project Number: 1-2114-2

Lab Number: L1004705
Report Date: 04/10/10

SAMPLE RESULTS

Lab ID: L1004705-12
Client ID: CAN 1655 FC 275
Sample Location: WOBURN, MA
Matrix: Air
Anaytical Method: 48,TO-15-SIM
Analytical Date: 04/08/10 22:33
Analyst: RY

Date Collected: 04/01/10 00:00
Date Received: 04/02/10
Field Prep: Not Specified

Parameter	ppbV Results	ppbV RDL	ug/m3 Results	ug/m3 RDL	Qualifier	Dilution Factor
Volatile Organics in Air by SIM - Mansfield Lab						
1,1,1-Trichloroethane	ND	0.020	ND	0.109		1
1,1,2-Trichloroethane	ND	0.020	ND	0.109		1
1,1-Dichloroethane	ND	0.020	ND	0.081		1
1,1-Dichloroethene	ND	0.020	ND	0.079		1
1,2,4-Trimethylbenzene	ND	0.020	ND	0.098		1
1,2-Dibromoethane	ND	0.020	ND	0.154		1
1,2-Dichloroethane	ND	0.020	ND	0.081		1
1,2-Dichloropropane	ND	0.020	ND	0.092		1
1,3-Butadiene	ND	0.020	ND	0.044		1
1,3-Dichlorobenzene	ND	0.020	ND	0.120		1
1,4-Dichlorobenzene	ND	0.020	ND	0.120		1
Benzene	ND	0.070	ND	0.223		1
Bromodichloromethane	ND	0.020	ND	0.134		1
Bromoform	ND	0.020	ND	0.206		1
Carbon tetrachloride	ND	0.020	ND	0.126		1
Chlorobenzene	ND	0.020	ND	0.092		1
Chloroform	ND	0.020	ND	0.098		1
cis-1,2-Dichloroethene	ND	0.020	ND	0.079		1
Ethylbenzene	ND	0.020	ND	0.087		1
Methylene chloride	ND	0.500	ND	1.74		1
Methyl tert butyl ether	ND	0.020	ND	0.072		1
Naphthalene	ND	0.050	ND	0.262		1
Xylenes, Total	ND	0.060	ND	0.260		1
Tetrachloroethene	ND	0.020	ND	0.136		1
Toluene	ND	0.050	ND	0.188		1

Project Name: UNIFIRST PROPERTY IA / VI
Project Number: 1-2114-2

Lab Number: L1004705
Report Date: 04/10/10

SAMPLE RESULTS

Lab ID: L1004705-12
Client ID: CAN 1655 FC 275
Sample Location: WOBURN, MA

Date Collected: 04/01/10 00:00
Date Received: 04/02/10
Field Prep: Not Specified

Parameter	ppbV Results	ppbV RDL	ug/m3 Results	ug/m3 RDL	Qualifier	Dilution Factor
Volatile Organics in Air by SIM - Mansfield Lab						
trans-1,2-Dichloroethene	ND	0.020	ND	0.079		1
trans-1,3-Dichloropropene	ND	0.020	ND	0.091		1
Trichloroethene	ND	0.020	ND	0.107		1
Vinyl chloride	ND	0.020	ND	0.051		1
Isopropylbenzene	ND	0.500	ND	2.46		1

Project Name: UNIFIRST PROPERTY IA / VI
Project Number: 1-2114-2

Lab Number: L1004705
Report Date: 04/10/10

SAMPLE RESULTS

Lab ID: L1004705-13
Client ID: CAN 969 FC 158
Sample Location: WOBURN, MA
Matrix: Air
Anaytical Method: 48,TO-15-SIM
Analytical Date: 04/08/10 23:10
Analyst: RY

Date Collected: 04/01/10 00:00
Date Received: 04/02/10
Field Prep: Not Specified

Parameter	ppbV Results	ppbV RDL	ug/m3 Results	ug/m3 RDL	Qualifier	Dilution Factor
Volatile Organics in Air by SIM - Mansfield Lab						
1,1,1-Trichloroethane	ND	0.020	ND	0.109		1
1,1,2-Trichloroethane	ND	0.020	ND	0.109		1
1,1-Dichloroethane	ND	0.020	ND	0.081		1
1,1-Dichloroethene	ND	0.020	ND	0.079		1
1,2,4-Trimethylbenzene	ND	0.020	ND	0.098		1
1,2-Dibromoethane	ND	0.020	ND	0.154		1
1,2-Dichloroethane	ND	0.020	ND	0.081		1
1,2-Dichloropropane	ND	0.020	ND	0.092		1
1,3-Butadiene	ND	0.020	ND	0.044		1
1,3-Dichlorobenzene	ND	0.020	ND	0.120		1
1,4-Dichlorobenzene	ND	0.020	ND	0.120		1
Benzene	ND	0.070	ND	0.223		1
Bromodichloromethane	ND	0.020	ND	0.134		1
Bromoform	ND	0.020	ND	0.206		1
Carbon tetrachloride	ND	0.020	ND	0.126		1
Chlorobenzene	ND	0.020	ND	0.092		1
Chloroform	ND	0.020	ND	0.098		1
cis-1,2-Dichloroethene	ND	0.020	ND	0.079		1
Ethylbenzene	ND	0.020	ND	0.087		1
Methylene chloride	ND	0.500	ND	1.74		1
Methyl tert butyl ether	ND	0.020	ND	0.072		1
Naphthalene	ND	0.050	ND	0.262		1
Xylenes, Total	ND	0.060	ND	0.260		1
Tetrachloroethene	ND	0.020	ND	0.136		1
Toluene	ND	0.050	ND	0.188		1

Project Name: UNIFIRST PROPERTY IA / VI
Project Number: 1-2114-2

Lab Number: L1004705
Report Date: 04/10/10

SAMPLE RESULTS

Lab ID: L1004705-13
Client ID: CAN 969 FC 158
Sample Location: WOBURN, MA

Date Collected: 04/01/10 00:00
Date Received: 04/02/10
Field Prep: Not Specified

Parameter	ppbV Results	ppbV RDL	ug/m3 Results	ug/m3 RDL	Qualifier	Dilution Factor
Volatile Organics in Air by SIM - Mansfield Lab						
trans-1,2-Dichloroethene	ND	0.020	ND	0.079		1
trans-1,3-Dichloropropene	ND	0.020	ND	0.091		1
Trichloroethene	ND	0.020	ND	0.107		1
Vinyl chloride	ND	0.020	ND	0.051		1
Isopropylbenzene	ND	0.500	ND	2.46		1

Project Name: UNIFIRST PROPERTY IA / VI
Project Number: 1-2114-2

Lab Number: L1004705
Report Date: 04/10/10

SAMPLE RESULTS

Lab ID: L1004705-14
Client ID: CAN 696 FC 303
Sample Location: WOBURN, MA
Matrix: Air
Anaytical Method: 48,TO-15-SIM
Analytical Date: 04/08/10 23:44
Analyst: RY

Date Collected: 04/01/10 00:00
Date Received: 04/02/10
Field Prep: Not Specified

Parameter	ppbV Results	ppbV RDL	ug/m3 Results	ug/m3 RDL	Qualifier	Dilution Factor
Volatile Organics in Air by SIM - Mansfield Lab						
1,1,1-Trichloroethane	ND	0.020	ND	0.109		1
1,1,2-Trichloroethane	ND	0.020	ND	0.109		1
1,1-Dichloroethane	ND	0.020	ND	0.081		1
1,1-Dichloroethene	ND	0.020	ND	0.079		1
1,2,4-Trimethylbenzene	ND	0.020	ND	0.098		1
1,2-Dibromoethane	ND	0.020	ND	0.154		1
1,2-Dichloroethane	ND	0.020	ND	0.081		1
1,2-Dichloropropane	ND	0.020	ND	0.092		1
1,3-Butadiene	ND	0.020	ND	0.044		1
1,3-Dichlorobenzene	ND	0.020	ND	0.120		1
1,4-Dichlorobenzene	ND	0.020	ND	0.120		1
Benzene	ND	0.070	ND	0.223		1
Bromodichloromethane	ND	0.020	ND	0.134		1
Bromoform	ND	0.020	ND	0.206		1
Carbon tetrachloride	ND	0.020	ND	0.126		1
Chlorobenzene	ND	0.020	ND	0.092		1
Chloroform	ND	0.020	ND	0.098		1
cis-1,2-Dichloroethene	ND	0.020	ND	0.079		1
Ethylbenzene	ND	0.020	ND	0.087		1
Methylene chloride	ND	0.500	ND	1.74		1
Methyl tert butyl ether	ND	0.020	ND	0.072		1
Naphthalene	ND	0.050	ND	0.262		1
Xylenes, Total	ND	0.060	ND	0.260		1
Tetrachloroethene	ND	0.020	ND	0.136		1
Toluene	ND	0.050	ND	0.188		1

Project Name: UNIFIRST PROPERTY IA / VI
Project Number: 1-2114-2

Lab Number: L1004705
Report Date: 04/10/10

SAMPLE RESULTS

Lab ID: L1004705-14
Client ID: CAN 696 FC 303
Sample Location: WOBURN, MA

Date Collected: 04/01/10 00:00
Date Received: 04/02/10
Field Prep: Not Specified

Parameter	ppbV Results	ppbV RDL	ug/m3 Results	ug/m3 RDL	Qualifier	Dilution Factor
Volatile Organics in Air by SIM - Mansfield Lab						
trans-1,2-Dichloroethene	ND	0.020	ND	0.079		1
trans-1,3-Dichloropropene	ND	0.020	ND	0.091		1
Trichloroethene	ND	0.020	ND	0.107		1
Vinyl chloride	ND	0.020	ND	0.051		1
Isopropylbenzene	ND	0.500	ND	2.46		1

Project Name: UNIFIRST PROPERTY IA / VI
Project Number: 1-2114-2

Lab Number: L1004705
Report Date: 04/10/10

SAMPLE RESULTS

Lab ID: L1004705-15
Client ID: CAN 1562 FC 166
Sample Location: WOBURN, MA
Matrix: Air
Anaytical Method: 48,TO-15-SIM
Analytical Date: 04/09/10 00:19
Analyst: RY

Date Collected: 04/01/10 00:00
Date Received: 04/02/10
Field Prep: Not Specified

Parameter	ppbV Results	ppbV RDL	ug/m3 Results	ug/m3 RDL	Qualifier	Dilution Factor
Volatile Organics in Air by SIM - Mansfield Lab						
1,1,1-Trichloroethane	ND	0.020	ND	0.109		1
1,1,2-Trichloroethane	ND	0.020	ND	0.109		1
1,1-Dichloroethane	ND	0.020	ND	0.081		1
1,1-Dichloroethene	ND	0.020	ND	0.079		1
1,2,4-Trimethylbenzene	ND	0.020	ND	0.098		1
1,2-Dibromoethane	ND	0.020	ND	0.154		1
1,2-Dichloroethane	ND	0.020	ND	0.081		1
1,2-Dichloropropane	ND	0.020	ND	0.092		1
1,3-Butadiene	ND	0.020	ND	0.044		1
1,3-Dichlorobenzene	ND	0.020	ND	0.120		1
1,4-Dichlorobenzene	ND	0.020	ND	0.120		1
Benzene	ND	0.070	ND	0.223		1
Bromodichloromethane	ND	0.020	ND	0.134		1
Bromoform	ND	0.020	ND	0.206		1
Carbon tetrachloride	ND	0.020	ND	0.126		1
Chlorobenzene	ND	0.020	ND	0.092		1
Chloroform	ND	0.020	ND	0.098		1
cis-1,2-Dichloroethene	ND	0.020	ND	0.079		1
Ethylbenzene	ND	0.020	ND	0.087		1
Methylene chloride	ND	0.500	ND	1.74		1
Methyl tert butyl ether	ND	0.020	ND	0.072		1
Naphthalene	ND	0.050	ND	0.262		1
Xylenes, Total	ND	0.060	ND	0.260		1
Tetrachloroethene	ND	0.020	ND	0.136		1
Toluene	ND	0.050	ND	0.188		1

Project Name: UNIFIRST PROPERTY IA / VI
Project Number: 1-2114-2

Lab Number: L1004705
Report Date: 04/10/10

SAMPLE RESULTS

Lab ID: L1004705-15
Client ID: CAN 1562 FC 166
Sample Location: WOBURN, MA

Date Collected: 04/01/10 00:00
Date Received: 04/02/10
Field Prep: Not Specified

Parameter	ppbV Results	ppbV RDL	ug/m3 Results	ug/m3 RDL	Qualifier	Dilution Factor
Volatile Organics in Air by SIM - Mansfield Lab						
trans-1,2-Dichloroethene	ND	0.020	ND	0.079		1
trans-1,3-Dichloropropene	ND	0.020	ND	0.091		1
Trichloroethene	ND	0.020	ND	0.107		1
Vinyl chloride	ND	0.020	ND	0.051		1
Isopropylbenzene	ND	0.500	ND	2.46		1

Project Name: UNIFIRST PROPERTY IA / VI
Project Number: 1-2114-2

Lab Number: L1004705
Report Date: 04/10/10

SAMPLE RESULTS

Lab ID: L1004705-16
Client ID: CAN 1576 FC 343
Sample Location: WOBURN, MA
Matrix: Air
Anaytical Method: 48,TO-15-SIM
Analytical Date: 04/09/10 00:55
Analyst: RY

Date Collected: 04/01/10 00:00
Date Received: 04/02/10
Field Prep: Not Specified

Parameter	ppbV Results	ppbV RDL	ug/m3 Results	ug/m3 RDL	Qualifier	Dilution Factor
Volatile Organics in Air by SIM - Mansfield Lab						
1,1,1-Trichloroethane	ND	0.020	ND	0.109		1
1,1,2-Trichloroethane	ND	0.020	ND	0.109		1
1,1-Dichloroethane	ND	0.020	ND	0.081		1
1,1-Dichloroethene	ND	0.020	ND	0.079		1
1,2,4-Trimethylbenzene	ND	0.020	ND	0.098		1
1,2-Dibromoethane	ND	0.020	ND	0.154		1
1,2-Dichloroethane	ND	0.020	ND	0.081		1
1,2-Dichloropropane	ND	0.020	ND	0.092		1
1,3-Butadiene	ND	0.020	ND	0.044		1
1,3-Dichlorobenzene	ND	0.020	ND	0.120		1
1,4-Dichlorobenzene	ND	0.020	ND	0.120		1
Benzene	ND	0.070	ND	0.223		1
Bromodichloromethane	ND	0.020	ND	0.134		1
Bromoform	ND	0.020	ND	0.206		1
Carbon tetrachloride	ND	0.020	ND	0.126		1
Chlorobenzene	ND	0.020	ND	0.092		1
Chloroform	ND	0.020	ND	0.098		1
cis-1,2-Dichloroethene	ND	0.020	ND	0.079		1
Ethylbenzene	ND	0.020	ND	0.087		1
Methylene chloride	ND	0.500	ND	1.74		1
Methyl tert butyl ether	ND	0.020	ND	0.072		1
Naphthalene	ND	0.050	ND	0.262		1
Xylenes, Total	ND	0.060	ND	0.260		1
Tetrachloroethene	ND	0.020	ND	0.136		1
Toluene	ND	0.050	ND	0.188		1

Project Name: UNIFIRST PROPERTY IA / VI
Project Number: 1-2114-2

Lab Number: L1004705
Report Date: 04/10/10

SAMPLE RESULTS

Lab ID: L1004705-16
Client ID: CAN 1576 FC 343
Sample Location: WOBURN, MA

Date Collected: 04/01/10 00:00
Date Received: 04/02/10
Field Prep: Not Specified

Parameter	ppbV Results	ppbV RDL	ug/m3 Results	ug/m3 RDL	Qualifier	Dilution Factor
Volatile Organics in Air by SIM - Mansfield Lab						
trans-1,2-Dichloroethene	ND	0.020	ND	0.079		1
trans-1,3-Dichloropropene	ND	0.020	ND	0.091		1
Trichloroethene	ND	0.020	ND	0.107		1
Vinyl chloride	ND	0.020	ND	0.051		1
Isopropylbenzene	ND	0.500	ND	2.46		1

Project Name: UNIFIRST PROPERTY IA / VI
Project Number: 1-2114-2

Lab Number: L1004705
Report Date: 04/10/10

SAMPLE RESULTS

Lab ID: L1004705-17
Client ID: CAN 932 FC 332
Sample Location: WOBURN, MA
Matrix: Air
Anaytical Method: 48,TO-15-SIM
Analytical Date: 04/09/10 01:28
Analyst: RY

Date Collected: 04/01/10 00:00
Date Received: 04/02/10
Field Prep: Not Specified

Parameter	ppbV Results	ppbV RDL	ug/m3 Results	ug/m3 RDL	Qualifier	Dilution Factor
Volatile Organics in Air by SIM - Mansfield Lab						
1,1,1-Trichloroethane	ND	0.020	ND	0.109		1
1,1,2-Trichloroethane	ND	0.020	ND	0.109		1
1,1-Dichloroethane	ND	0.020	ND	0.081		1
1,1-Dichloroethene	ND	0.020	ND	0.079		1
1,2,4-Trimethylbenzene	ND	0.020	ND	0.098		1
1,2-Dibromoethane	ND	0.020	ND	0.154		1
1,2-Dichloroethane	ND	0.020	ND	0.081		1
1,2-Dichloropropane	ND	0.020	ND	0.092		1
1,3-Butadiene	ND	0.020	ND	0.044		1
1,3-Dichlorobenzene	ND	0.020	ND	0.120		1
1,4-Dichlorobenzene	ND	0.020	ND	0.120		1
Benzene	ND	0.070	ND	0.223		1
Bromodichloromethane	ND	0.020	ND	0.134		1
Bromoform	ND	0.020	ND	0.206		1
Carbon tetrachloride	ND	0.020	ND	0.126		1
Chlorobenzene	ND	0.020	ND	0.092		1
Chloroform	ND	0.020	ND	0.098		1
cis-1,2-Dichloroethene	ND	0.020	ND	0.079		1
Ethylbenzene	ND	0.020	ND	0.087		1
Methylene chloride	ND	0.500	ND	1.74		1
Methyl tert butyl ether	ND	0.020	ND	0.072		1
Naphthalene	ND	0.050	ND	0.262		1
Xylenes, Total	ND	0.060	ND	0.260		1
Tetrachloroethene	ND	0.020	ND	0.136		1
Toluene	ND	0.050	ND	0.188		1

Project Name: UNIFIRST PROPERTY IA / VI
Project Number: 1-2114-2
Lab Number: L1004705
Report Date: 04/10/10

SAMPLE RESULTS

Lab ID: L1004705-17
Client ID: CAN 932 FC 332
Sample Location: WOBURN, MA
Date Collected: 04/01/10 00:00
Date Received: 04/02/10
Field Prep: Not Specified

Parameter	ppbV Results	ppbV RDL	ug/m3 Results	ug/m3 RDL	Qualifier	Dilution Factor
Volatile Organics in Air by SIM - Mansfield Lab						
trans-1,2-Dichloroethene	ND	0.020	ND	0.079		1
trans-1,3-Dichloropropene	ND	0.020	ND	0.091		1
Trichloroethene	ND	0.020	ND	0.107		1
Vinyl chloride	ND	0.020	ND	0.051		1
Isopropylbenzene	ND	0.500	ND	2.46		1

Project Name: UNIFIRST PROPERTY IA / VI
Project Number: 1-2114-2
Lab Number: L1004705
Report Date: 04/10/10

SAMPLE RESULTS

Lab ID: L1004705-18
Client ID: CAN 1646 FC 090
Sample Location: WOBURN, MA
Matrix: Air
Anaytical Method: 48,TO-15-SIM
Analytical Date: 04/09/10 02:05
Analyst: RY

Date Collected: 04/01/10 00:00
Date Received: 04/02/10
Field Prep: Not Specified

Parameter	ppbV Results	ppbV RDL	ug/m3 Results	ug/m3 RDL	Qualifier	Dilution Factor
Volatile Organics in Air by SIM - Mansfield Lab						
1,1,1-Trichloroethane	ND	0.020	ND	0.109		1
1,1,2-Trichloroethane	ND	0.020	ND	0.109		1
1,1-Dichloroethane	ND	0.020	ND	0.081		1
1,1-Dichloroethene	ND	0.020	ND	0.079		1
1,2,4-Trimethylbenzene	ND	0.020	ND	0.098		1
1,2-Dibromoethane	ND	0.020	ND	0.154		1
1,2-Dichloroethane	ND	0.020	ND	0.081		1
1,2-Dichloropropane	ND	0.020	ND	0.092		1
1,3-Butadiene	ND	0.020	ND	0.044		1
1,3-Dichlorobenzene	ND	0.020	ND	0.120		1
1,4-Dichlorobenzene	ND	0.020	ND	0.120		1
Benzene	ND	0.070	ND	0.223		1
Bromodichloromethane	ND	0.020	ND	0.134		1
Bromoform	ND	0.020	ND	0.206		1
Carbon tetrachloride	ND	0.020	ND	0.126		1
Chlorobenzene	ND	0.020	ND	0.092		1
Chloroform	ND	0.020	ND	0.098		1
cis-1,2-Dichloroethene	ND	0.020	ND	0.079		1
Ethylbenzene	ND	0.020	ND	0.087		1
Methylene chloride	ND	0.500	ND	1.74		1
Methyl tert butyl ether	ND	0.020	ND	0.072		1
Naphthalene	ND	0.050	ND	0.262		1
Xylenes, Total	ND	0.060	ND	0.260		1
Tetrachloroethene	ND	0.020	ND	0.136		1
Toluene	ND	0.050	ND	0.188		1

Project Name: UNIFIRST PROPERTY IA / VI
Project Number: 1-2114-2
Lab Number: L1004705
Report Date: 04/10/10

SAMPLE RESULTS

Lab ID: L1004705-18
Client ID: CAN 1646 FC 090
Sample Location: WOBURN, MA
Date Collected: 04/01/10 00:00
Date Received: 04/02/10
Field Prep: Not Specified

Parameter	ppbV Results	ppbV RDL	ug/m3 Results	ug/m3 RDL	Qualifier	Dilution Factor
Volatile Organics in Air by SIM - Mansfield Lab						
trans-1,2-Dichloroethene	ND	0.020	ND	0.079		1
trans-1,3-Dichloropropene	ND	0.020	ND	0.091		1
Trichloroethene	ND	0.020	ND	0.107		1
Vinyl chloride	ND	0.020	ND	0.051		1
Isopropylbenzene	ND	0.500	ND	2.46		1

Project Name: UNIFIRST PROPERTY IA / VI
Project Number: 1-2114-2

Lab Number: L1004705
Report Date: 04/10/10

SAMPLE RESULTS

Lab ID: L1004705-19
Client ID: CAN 963 FC 451
Sample Location: WOBURN, MA
Matrix: Air
Anaytical Method: 48,TO-15-SIM
Analytical Date: 04/09/10 02:39
Analyst: RY

Date Collected: 04/01/10 00:00
Date Received: 04/02/10
Field Prep: Not Specified

Parameter	ppbV Results	ppbV RDL	ug/m3 Results	ug/m3 RDL	Qualifier	Dilution Factor
Volatile Organics in Air by SIM - Mansfield Lab						
1,1,1-Trichloroethane	ND	0.020	ND	0.109		1
1,1,2-Trichloroethane	ND	0.020	ND	0.109		1
1,1-Dichloroethane	ND	0.020	ND	0.081		1
1,1-Dichloroethene	ND	0.020	ND	0.079		1
1,2,4-Trimethylbenzene	ND	0.020	ND	0.098		1
1,2-Dibromoethane	ND	0.020	ND	0.154		1
1,2-Dichloroethane	ND	0.020	ND	0.081		1
1,2-Dichloropropane	ND	0.020	ND	0.092		1
1,3-Butadiene	ND	0.020	ND	0.044		1
1,3-Dichlorobenzene	ND	0.020	ND	0.120		1
1,4-Dichlorobenzene	ND	0.020	ND	0.120		1
Benzene	ND	0.070	ND	0.223		1
Bromodichloromethane	ND	0.020	ND	0.134		1
Bromoform	ND	0.020	ND	0.206		1
Carbon tetrachloride	ND	0.020	ND	0.126		1
Chlorobenzene	ND	0.020	ND	0.092		1
Chloroform	ND	0.020	ND	0.098		1
cis-1,2-Dichloroethene	ND	0.020	ND	0.079		1
Ethylbenzene	ND	0.020	ND	0.087		1
Methylene chloride	ND	0.500	ND	1.74		1
Methyl tert butyl ether	ND	0.020	ND	0.072		1
Naphthalene	ND	0.050	ND	0.262		1
Xylenes, Total	ND	0.060	ND	0.260		1
Tetrachloroethene	ND	0.020	ND	0.136		1
Toluene	ND	0.050	ND	0.188		1

Project Name: UNIFIRST PROPERTY IA / VI
Project Number: 1-2114-2

Lab Number: L1004705
Report Date: 04/10/10

SAMPLE RESULTS

Lab ID: L1004705-19
Client ID: CAN 963 FC 451
Sample Location: WOBURN, MA

Date Collected: 04/01/10 00:00
Date Received: 04/02/10
Field Prep: Not Specified

Parameter	ppbV Results	ppbV RDL	ug/m3 Results	ug/m3 RDL	Qualifier	Dilution Factor
Volatile Organics in Air by SIM - Mansfield Lab						
trans-1,2-Dichloroethene	ND	0.020	ND	0.079		1
trans-1,3-Dichloropropene	ND	0.020	ND	0.091		1
Trichloroethene	ND	0.020	ND	0.107		1
Vinyl chloride	ND	0.020	ND	0.051		1
Isopropylbenzene	ND	0.500	ND	2.46		1

Project Name: UNIFIRST PROPERTY IA / VI
Project Number: 1-2114-2

Lab Number: L1004705
Report Date: 04/10/10

SAMPLE RESULTS

Lab ID: L1004705-20
Client ID: CAN 1556 FC 390
Sample Location: WOBURN, MA
Matrix: Air
Anaytical Method: 48,TO-15-SIM
Analytical Date: 04/09/10 03:14
Analyst: RY

Date Collected: 04/01/10 00:00
Date Received: 04/02/10
Field Prep: Not Specified

Parameter	ppbV Results	ppbV RDL	ug/m3 Results	ug/m3 RDL	Qualifier	Dilution Factor
Volatile Organics in Air by SIM - Mansfield Lab						
1,1,1-Trichloroethane	ND	0.020	ND	0.109		1
1,1,2-Trichloroethane	ND	0.020	ND	0.109		1
1,1-Dichloroethane	ND	0.020	ND	0.081		1
1,1-Dichloroethene	ND	0.020	ND	0.079		1
1,2,4-Trimethylbenzene	ND	0.020	ND	0.098		1
1,2-Dibromoethane	ND	0.020	ND	0.154		1
1,2-Dichloroethane	ND	0.020	ND	0.081		1
1,2-Dichloropropane	ND	0.020	ND	0.092		1
1,3-Butadiene	ND	0.020	ND	0.044		1
1,3-Dichlorobenzene	ND	0.020	ND	0.120		1
1,4-Dichlorobenzene	ND	0.020	ND	0.120		1
Benzene	ND	0.070	ND	0.223		1
Bromodichloromethane	ND	0.020	ND	0.134		1
Bromoform	ND	0.020	ND	0.206		1
Carbon tetrachloride	ND	0.020	ND	0.126		1
Chlorobenzene	ND	0.020	ND	0.092		1
Chloroform	ND	0.020	ND	0.098		1
cis-1,2-Dichloroethene	ND	0.020	ND	0.079		1
Ethylbenzene	ND	0.020	ND	0.087		1
Methylene chloride	ND	0.500	ND	1.74		1
Methyl tert butyl ether	ND	0.020	ND	0.072		1
Naphthalene	ND	0.050	ND	0.262		1
Xylenes, Total	ND	0.060	ND	0.260		1
Tetrachloroethene	ND	0.020	ND	0.136		1
Toluene	ND	0.050	ND	0.188		1

Project Name: UNIFIRST PROPERTY IA / VI
Project Number: 1-2114-2
Lab Number: L1004705
Report Date: 04/10/10

SAMPLE RESULTS

Lab ID: L1004705-20
Client ID: CAN 1556 FC 390
Sample Location: WOBURN, MA
Date Collected: 04/01/10 00:00
Date Received: 04/02/10
Field Prep: Not Specified

Parameter	ppbV Results	ppbV RDL	ug/m3 Results	ug/m3 RDL	Qualifier	Dilution Factor
Volatile Organics in Air by SIM - Mansfield Lab						
trans-1,2-Dichloroethene	ND	0.020	ND	0.079		1
trans-1,3-Dichloropropene	ND	0.020	ND	0.091		1
Trichloroethene	ND	0.020	ND	0.107		1
Vinyl chloride	ND	0.020	ND	0.051		1
Isopropylbenzene	ND	0.500	ND	2.46		1

Project Name: UNIFIRST PROPERTY IA / VI
Project Number: 1-2114-2

Lab Number: L1004705
Report Date: 04/10/10

Method Blank Analysis
Batch Quality Control

Analytical Method: 48,TO-15-SIM
Analytical Date: 04/08/10 14:34

Parameter	ppbV Results	ppbV RDL	ug/m3 Results	ug/m3 RDL	Qualifier	Dilution Factor
Volatile Organics in Air by SIM - Mansfield Lab for sample(s): 01-20 Batch: WG406613-4						
1,1,1-Trichloroethane	ND	0.020	ND	0.109		1
1,1,2-Trichloroethane	ND	0.020	ND	0.109		1
1,1-Dichloroethane	ND	0.020	ND	0.081		1
1,1-Dichloroethene	ND	0.020	ND	0.079		1
1,2,4-Trimethylbenzene	ND	0.020	ND	0.098		1
1,2-Dibromoethane	ND	0.020	ND	0.154		1
1,2-Dichloroethane	ND	0.020	ND	0.081		1
1,2-Dichloropropane	ND	0.020	ND	0.092		1
1,3-Butadiene	ND	0.020	ND	0.044		1
1,3-Dichlorobenzene	ND	0.020	ND	0.120		1
1,4-Dichlorobenzene	ND	0.020	ND	0.120		1
Benzene	ND	0.070	ND	0.223		1
Bromodichloromethane	ND	0.020	ND	0.134		1
Bromoform	ND	0.020	ND	0.206		1
Carbon tetrachloride	ND	0.020	ND	0.126		1
Chlorobenzene	ND	0.020	ND	0.092		1
Chloroform	ND	0.020	ND	0.098		1
cis-1,2-Dichloroethene	ND	0.020	ND	0.079		1
Ethylbenzene	ND	0.020	ND	0.087		1
Methylene chloride	ND	0.500	ND	1.74		1
Methyl tert butyl ether	ND	0.020	ND	0.072		1
Naphthalene	ND	0.050	ND	0.262		1
Xylenes, Total	ND	0.060	ND	0.260		1
Tetrachloroethene	ND	0.020	ND	0.136		1
Toluene	ND	0.050	ND	0.188		1

Project Name: UNIFIRST PROPERTY IA / VI
Project Number: 1-2114-2

Lab Number: L1004705
Report Date: 04/10/10

Method Blank Analysis
Batch Quality Control

Analytical Method: 48,TO-15-SIM
Analytical Date: 04/08/10 14:34

Parameter	ppbV Results	ppbV RDL	ug/m3 Results	ug/m3 RDL	Qualifier	Dilution Factor
Volatile Organics in Air by SIM - Mansfield Lab for sample(s): 01-20 Batch: WG406613-4						
trans-1,2-Dichloroethene	ND	0.020	ND	0.079		1
trans-1,3-Dichloropropene	ND	0.020	ND	0.091		1
Trichloroethene	ND	0.020	ND	0.107		1
Vinyl chloride	ND	0.020	ND	0.051		1
Isopropylbenzene	ND	0.500	ND	2.46		1

Lab Control Sample Analysis
Batch Quality Control

Project Name: UNIFIRST PROPERTY IA / VI
Project Number: 1-2114-2
Lab Number: L1004705
Report Date: 04/10/10

Parameter	LCS %Recovery	Qual	LCSD %Recovery	Qual	%Recovery Limits	RPD	Qual	RPD Limits
Volatile Organics in Air by SIM - Mansfield Lab Associated sample(s): 01-20 Batch: WG406613-3								
1,1,1-Trichloroethane	101		-		70-130	-		25
1,1,2-Trichloroethane	93		-		70-130	-		25
1,1-Dichloroethane	89		-		70-130	-		25
1,1-Dichloroethene	89		-		70-130	-		25
1,2,4-Trimethylbenzene	89		-		70-130	-		25
1,2-Dibromoethane	94		-		70-130	-		25
1,2-Dichloroethane	96		-		70-130	-		25
1,2-Dichloropropane	89		-		70-130	-		25
1,3-Butadiene	105		-		70-130	-		25
1,3-Dichlorobenzene	100		-		70-130	-		25
1,4-Dichlorobenzene	102		-		70-130	-		25
Benzene	87		-		70-130	-		25
Bromodichloromethane	97		-		70-130	-		25
Bromoform	102		-		70-130	-		25
Carbon tetrachloride	108		-		70-130	-		25
Chlorobenzene	93		-		70-130	-		25
Chloroform	94		-		70-130	-		25
cis-1,2-Dichloroethene	93		-		70-130	-		25
Ethylbenzene	82		-		70-130	-		25
Methylene chloride	80		-		70-130	-		25
Methyl tert butyl ether	72		-		70-130	-		25

Lab Control Sample Analysis
Batch Quality Control

Project Name: UNIFIRST PROPERTY IA / VI
Project Number: 1-2114-2

Lab Number: L1004705
Report Date: 04/10/10

Parameter	LCS %Recovery	Qual	LCSD %Recovery	Qual	%Recovery Limits	RPD	Qual	RPD Limits
Volatile Organics in Air by SIM - Mansfield Lab Associated sample(s): 01-20 Batch: WG406613-3								
Naphthalene	102		-		70-130	-		25
XYLENE (TOTAL)	83		-		70-130	-		25
Tetrachloroethene	96		-		70-130	-		25
Toluene	83		-		70-130	-		25
trans-1,2-Dichloroethene	91		-		70-130	-		25
trans-1,3-Dichloropropene	83		-		70-130	-		25
Trichloroethene	96		-		70-130	-		25
Vinyl chloride	95		-		70-130	-		25
Isopropylbenzene	79		-		70-130	-		25

Project Name:	UNIFIRST PROPERTY IA / VI	**Lab Number:**	L1004705
Project Number:	1-2114-2	**Report Date:**	04/10/10

SAMPLE RESULTS

Lab ID:	L1004705-01	Date Collected:	04/01/10 00:00
Client ID:	CAN 652 FC 466	Date Received:	04/02/10
Sample Location:	WOBURN, MA	Field Prep:	Not Specified
Matrix:	Air		
Analytical Method:	96,APH		
Analytical Date:	04/08/10 15:51		
Analyst:	RY		

Quality Control Information

Sample Type:	100 ml/min Composite
Sample Container Type:	Canister - 6 Liter
Sampling Flow Controller:	Mechanical
Sampling Zone:	Unknown
Sampling Flow Meter RPD of pre & post-sampling calibration check:	<=20%
Were all QA/QC procedures REQUIRED by the method followed?	Yes
Were all performance/acceptance standards for the required procedures achieved?	Yes
Were significant modifications made to the method as specified in Sect 11.1.2?	No

Parameter	Result	Qualifier	Units	RDL	Dilution Factor
Petroleum Hydrocarbons in Air - Mansfield Lab					
1,3-Butadiene	ND		ug/m3	2.0	1
Methyl tert butyl ether	ND		ug/m3	2.0	1
Benzene	ND		ug/m3	2.0	1
Toluene	ND		ug/m3	2.0	1
Ethylbenzene	ND		ug/m3	2.0	1
p/m-Xylene	ND		ug/m3	4.0	1
o-Xylene	ND		ug/m3	2.0	1
Naphthalene	ND		ug/m3	2.0	1
C5-C8 Aliphatics, Adjusted	ND		ug/m3	12	1
C9-C12 Aliphatics, Adjusted	ND		ug/m3	14	1
C9-C10 Aromatics	ND		ug/m3	10	1

Project Name:	UNIFIRST PROPERTY IA / VI	**Lab Number:**	L1004705
Project Number:	1-2114-2	**Report Date:**	04/10/10

SAMPLE RESULTS

Lab ID:	L1004705-02	Date Collected:	04/01/10 00:00
Client ID:	CAN 998 FC 045	Date Received:	04/02/10
Sample Location:	WOBURN, MA	Field Prep:	Not Specified
Matrix:	Air		
Analytical Method:	96,APH		
Analytical Date:	04/08/10 16:27		
Analyst:	RY		

Quality Control Information

Sample Type:	100 ml/min Composite
Sample Container Type:	Canister - 6 Liter
Sampling Flow Controller:	Mechanical
Sampling Zone:	Unknown
Sampling Flow Meter RPD of pre & post-sampling calibration check:	<=20%
Were all QA/QC procedures REQUIRED by the method followed?	Yes
Were all performance/acceptance standards for the required procedures achieved?	Yes
Were significant modifications made to the method as specified in Sect 11.1.2?	No

Parameter	Result	Qualifier	Units	RDL	Dilution Factor
Petroleum Hydrocarbons in Air - Mansfield Lab					
1,3-Butadiene	ND		ug/m3	2.0	1
Methyl tert butyl ether	ND		ug/m3	2.0	1
Benzene	ND		ug/m3	2.0	1
Toluene	ND		ug/m3	2.0	1
Ethylbenzene	ND		ug/m3	2.0	1
p/m-Xylene	ND		ug/m3	4.0	1
o-Xylene	ND		ug/m3	2.0	1
Naphthalene	ND		ug/m3	2.0	1
C5-C8 Aliphatics, Adjusted	ND		ug/m3	12	1
C9-C12 Aliphatics, Adjusted	ND		ug/m3	14	1
C9-C10 Aromatics	ND		ug/m3	10	1

Project Name:	UNIFIRST PROPERTY IA / VI	**Lab Number:**	L1004705
Project Number:	1-2114-2	**Report Date:**	04/10/10

SAMPLE RESULTS

Lab ID:	L1004705-03	Date Collected:	04/01/10 00:00
Client ID:	CAN 1706 FC 291	Date Received:	04/02/10
Sample Location:	WOBURN, MA	Field Prep:	Not Specified
Matrix:	Air		
Analytical Method:	96,APH		
Analytical Date:	04/08/10 18:28		
Analyst:	RY		

Quality Control Information

Sample Type:	100 ml/min Composite
Sample Container Type:	Canister - 6 Liter
Sampling Flow Controller:	Mechanical
Sampling Zone:	Unknown
Sampling Flow Meter RPD of pre & post-sampling calibration check:	<=20%
Were all QA/QC procedures REQUIRED by the method followed?	Yes
Were all performance/acceptance standards for the required procedures achieved?	Yes
Were significant modifications made to the method as specified in Sect 11.1.2?	No

Parameter	Result	Qualifier	Units	RDL	Dilution Factor
Petroleum Hydrocarbons in Air - Mansfield Lab					
1,3-Butadiene	ND		ug/m3	2.0	1
Methyl tert butyl ether	ND		ug/m3	2.0	1
Benzene	ND		ug/m3	2.0	1
Toluene	ND		ug/m3	2.0	1
Ethylbenzene	ND		ug/m3	2.0	1
p/m-Xylene	ND		ug/m3	4.0	1
o-Xylene	ND		ug/m3	2.0	1
Naphthalene	ND		ug/m3	2.0	1
C5-C8 Aliphatics, Adjusted	ND		ug/m3	12	1
C9-C12 Aliphatics, Adjusted	ND		ug/m3	14	1
C9-C10 Aromatics	ND		ug/m3	10	1

Project Name:	UNIFIRST PROPERTY IA / VI	**Lab Number:**	L1004705
Project Number:	1-2114-2	**Report Date:**	04/10/10

SAMPLE RESULTS

Lab ID:	L1004705-04	Date Collected:	04/01/10 00:00
Client ID:	CAN 1692 FC 368	Date Received:	04/02/10
Sample Location:	WOBURN, MA	Field Prep:	Not Specified
Matrix:	Air		
Analytical Method:	96,APH		
Analytical Date:	04/08/10 17:01		
Analyst:	RY		

Quality Control Information

Sample Type:	100 ml/min Composite
Sample Container Type:	Canister - 6 Liter
Sampling Flow Controller:	Mechanical
Sampling Zone:	Unknown
Sampling Flow Meter RPD of pre & post-sampling calibration check:	<=20%
Were all QA/QC procedures REQUIRED by the method followed?	Yes
Were all performance/acceptance standards for the required procedures achieved?	Yes
Were significant modifications made to the method as specified in Sect 11.1.2?	No

Parameter	Result	Qualifier	Units	RDL	Dilution Factor
Petroleum Hydrocarbons in Air - Mansfield Lab					
1,3-Butadiene	ND		ug/m3	2.0	1
Methyl tert butyl ether	ND		ug/m3	2.0	1
Benzene	ND		ug/m3	2.0	1
Toluene	ND		ug/m3	2.0	1
Ethylbenzene	ND		ug/m3	2.0	1
p/m-Xylene	ND		ug/m3	4.0	1
o-Xylene	ND		ug/m3	2.0	1
Naphthalene	ND		ug/m3	2.0	1
C5-C8 Aliphatics, Adjusted	ND		ug/m3	12	1
C9-C12 Aliphatics, Adjusted	ND		ug/m3	14	1
C9-C10 Aromatics	ND		ug/m3	10	1

Project Name:	UNIFIRST PROPERTY IA / VI	**Lab Number:**	L1004705
Project Number:	1-2114-2	**Report Date:**	04/10/10

SAMPLE RESULTS

Lab ID:	L1004705-05	Date Collected:	04/01/10 00:00
Client ID:	CAN 965 FC 367	Date Received:	04/02/10
Sample Location:	WOBURN, MA	Field Prep:	Not Specified
Matrix:	Air		
Analytical Method:	96,APH		
Analytical Date:	04/08/10 17:35		
Analyst:	RY		

Quality Control Information

Sample Type:	100 ml/min Composite
Sample Container Type:	Canister - 6 Liter
Sampling Flow Controller:	Mechanical
Sampling Zone:	Unknown
Sampling Flow Meter RPD of pre & post-sampling calibration check:	<=20%
Were all QA/QC procedures REQUIRED by the method followed?	Yes
Were all performance/acceptance standards for the required procedures achieved?	Yes
Were significant modifications made to the method as specified in Sect 11.1.2?	No

Parameter	Result	Qualifier	Units	RDL	Dilution Factor
Petroleum Hydrocarbons in Air - Mansfield Lab					
1,3-Butadiene	ND		ug/m3	2.0	1
Methyl tert butyl ether	ND		ug/m3	2.0	1
Benzene	ND		ug/m3	2.0	1
Toluene	ND		ug/m3	2.0	1
Ethylbenzene	ND		ug/m3	2.0	1
p/m-Xylene	ND		ug/m3	4.0	1
o-Xylene	ND		ug/m3	2.0	1
Naphthalene	ND		ug/m3	2.0	1
C5-C8 Aliphatics, Adjusted	ND		ug/m3	12	1
C9-C12 Aliphatics, Adjusted	ND		ug/m3	14	1
C9-C10 Aromatics	ND		ug/m3	10	1

Project Name:	UNIFIRST PROPERTY IA / VI	**Lab Number:**	L1004705
Project Number:	1-2114-2	**Report Date:**	04/10/10

SAMPLE RESULTS

Lab ID:	L1004705-06	Date Collected:	04/01/10 00:00
Client ID:	CAN 587 FC 465	Date Received:	04/02/10
Sample Location:	WOBURN, MA	Field Prep:	Not Specified
Matrix:	Air		
Analytical Method:	96,APH		
Analytical Date:	04/08/10 19:03		
Analyst:	RY		

Quality Control Information

Sample Type:	100 ml/min Composite
Sample Container Type:	Canister - 6 Liter
Sampling Flow Controller:	Mechanical
Sampling Zone:	Unknown
Sampling Flow Meter RPD of pre & post-sampling calibration check:	<=20%
Were all QA/QC procedures REQUIRED by the method followed?	Yes
Were all performance/acceptance standards for the required procedures achieved?	Yes
Were significant modifications made to the method as specified in Sect 11.1.2?	No

Parameter	Result	Qualifier	Units	RDL	Dilution Factor
Petroleum Hydrocarbons in Air - Mansfield Lab					
1,3-Butadiene	ND		ug/m3	2.0	1
Methyl tert butyl ether	ND		ug/m3	2.0	1
Benzene	ND		ug/m3	2.0	1
Toluene	ND		ug/m3	2.0	1
Ethylbenzene	ND		ug/m3	2.0	1
p/m-Xylene	ND		ug/m3	4.0	1
o-Xylene	ND		ug/m3	2.0	1
Naphthalene	ND		ug/m3	2.0	1
C5-C8 Aliphatics, Adjusted	ND		ug/m3	12	1
C9-C12 Aliphatics, Adjusted	ND		ug/m3	14	1
C9-C10 Aromatics	ND		ug/m3	10	1

Project Name:	UNIFIRST PROPERTY IA / VI	**Lab Number:**	L1004705
Project Number:	1-2114-2	**Report Date:**	04/10/10

SAMPLE RESULTS

Lab ID:	L1004705-07	Date Collected:	04/01/10 00:00
Client ID:	CAN 956 FC 019	Date Received:	04/02/10
Sample Location:	WOBURN, MA	Field Prep:	Not Specified
Matrix:	Air		
Analytical Method:	96,APH		
Analytical Date:	04/08/10 19:38		
Analyst:	RY		

Quality Control Information

Sample Type:	100 ml/min Composite
Sample Container Type:	Canister - 6 Liter
Sampling Flow Controller:	Mechanical
Sampling Zone:	Unknown
Sampling Flow Meter RPD of pre & post-sampling calibration check:	<=20%
Were all QA/QC procedures REQUIRED by the method followed?	Yes
Were all performance/acceptance standards for the required procedures achieved?	Yes
Were significant modifications made to the method as specified in Sect 11.1.2?	No

Parameter	Result	Qualifier	Units	RDL	Dilution Factor
Petroleum Hydrocarbons in Air - Mansfield Lab					
1,3-Butadiene	ND		ug/m3	2.0	1
Methyl tert butyl ether	ND		ug/m3	2.0	1
Benzene	ND		ug/m3	2.0	1
Toluene	ND		ug/m3	2.0	1
Ethylbenzene	ND		ug/m3	2.0	1
p/m-Xylene	ND		ug/m3	4.0	1
o-Xylene	ND		ug/m3	2.0	1
Naphthalene	ND		ug/m3	2.0	1
C5-C8 Aliphatics, Adjusted	ND		ug/m3	12	1
C9-C12 Aliphatics, Adjusted	ND		ug/m3	14	1
C9-C10 Aromatics	ND		ug/m3	10	1

Project Name:	UNIFIRST PROPERTY IA / VI	**Lab Number:**	L1004705
Project Number:	1-2114-2	**Report Date:**	04/10/10

SAMPLE RESULTS

Lab ID:	L1004705-08	Date Collected:	04/01/10 00:00
Client ID:	CAN 1520 FC 463	Date Received:	04/02/10
Sample Location:	WOBURN, MA	Field Prep:	Not Specified
Matrix:	Air		
Analytical Method:	96,APH		
Analytical Date:	04/08/10 20:13		
Analyst:	RY		

Quality Control Information

Sample Type:	100 ml/min Composite
Sample Container Type:	Canister - 6 Liter
Sampling Flow Controller:	Mechanical
Sampling Zone:	Unknown
Sampling Flow Meter RPD of pre & post-sampling calibration check:	<=20%
Were all QA/QC procedures REQUIRED by the method followed?	Yes
Were all performance/acceptance standards for the required procedures achieved?	Yes
Were significant modifications made to the method as specified in Sect 11.1.2?	No

Parameter	Result	Qualifier	Units	RDL	Dilution Factor
Petroleum Hydrocarbons in Air - Mansfield Lab					
1,3-Butadiene	ND		ug/m3	2.0	1
Methyl tert butyl ether	ND		ug/m3	2.0	1
Benzene	ND		ug/m3	2.0	1
Toluene	ND		ug/m3	2.0	1
Ethylbenzene	ND		ug/m3	2.0	1
p/m-Xylene	ND		ug/m3	4.0	1
o-Xylene	ND		ug/m3	2.0	1
Naphthalene	ND		ug/m3	2.0	1
C5-C8 Aliphatics, Adjusted	ND		ug/m3	12	1
C9-C12 Aliphatics, Adjusted	ND		ug/m3	14	1
C9-C10 Aromatics	ND		ug/m3	10	1

Project Name:	UNIFIRST PROPERTY IA / VI	**Lab Number:**	L1004705
Project Number:	1-2114-2	**Report Date:**	04/10/10

SAMPLE RESULTS

Lab ID:	L1004705-09	Date Collected:	04/01/10 00:00
Client ID:	CAN 764 FC 257	Date Received:	04/02/10
Sample Location:	WOBURN, MA	Field Prep:	Not Specified
Matrix:	Air		
Analytical Method:	96,APH		
Analytical Date:	04/08/10 20:48		
Analyst:	RY		

Quality Control Information

Sample Type:	100 ml/min Composite
Sample Container Type:	Canister - 6 Liter
Sampling Flow Controller:	Mechanical
Sampling Zone:	Unknown
Sampling Flow Meter RPD of pre & post-sampling calibration check:	<=20%
Were all QA/QC procedures REQUIRED by the method followed?	Yes
Were all performance/acceptance standards for the required procedures achieved?	Yes
Were significant modifications made to the method as specified in Sect 11.1.2?	No

Parameter	Result	Qualifier	Units	RDL	Dilution Factor
Petroleum Hydrocarbons in Air - Mansfield Lab					
1,3-Butadiene	ND		ug/m3	2.0	1
Methyl tert butyl ether	ND		ug/m3	2.0	1
Benzene	ND		ug/m3	2.0	1
Toluene	ND		ug/m3	2.0	1
Ethylbenzene	ND		ug/m3	2.0	1
p/m-Xylene	ND		ug/m3	4.0	1
o-Xylene	ND		ug/m3	2.0	1
Naphthalene	ND		ug/m3	2.0	1
C5-C8 Aliphatics, Adjusted	ND		ug/m3	12	1
C9-C12 Aliphatics, Adjusted	ND		ug/m3	14	1
C9-C10 Aromatics	ND		ug/m3	10	1

Project Name:	UNIFIRST PROPERTY IA / VI	**Lab Number:**	L1004705
Project Number:	1-2114-2	**Report Date:**	04/10/10

SAMPLE RESULTS

Lab ID:	L1004705-10	Date Collected:	04/01/10 00:00
Client ID:	CAN 1053 FC 269	Date Received:	04/02/10
Sample Location:	WOBURN, MA	Field Prep:	Not Specified
Matrix:	Air		
Analytical Method:	96,APH		
Analytical Date:	04/08/10 21:24		
Analyst:	RY		

Quality Control Information

Sample Type:	100 ml/min Composite
Sample Container Type:	Canister - 6 Liter
Sampling Flow Controller:	Mechanical
Sampling Zone:	Unknown
Sampling Flow Meter RPD of pre & post-sampling calibration check:	<=20%
Were all QA/QC procedures REQUIRED by the method followed?	Yes
Were all performance/acceptance standards for the required procedures achieved?	Yes
Were significant modifications made to the method as specified in Sect 11.1.2?	No

Parameter	Result	Qualifier	Units	RDL	Dilution Factor
Petroleum Hydrocarbons in Air - Mansfield Lab					
1,3-Butadiene	ND		ug/m3	2.0	1
Methyl tert butyl ether	ND		ug/m3	2.0	1
Benzene	ND		ug/m3	2.0	1
Toluene	ND		ug/m3	2.0	1
Ethylbenzene	ND		ug/m3	2.0	1
p/m-Xylene	ND		ug/m3	4.0	1
o-Xylene	ND		ug/m3	2.0	1
Naphthalene	ND		ug/m3	2.0	1
C5-C8 Aliphatics, Adjusted	ND		ug/m3	12	1
C9-C12 Aliphatics, Adjusted	ND		ug/m3	14	1
C9-C10 Aromatics	ND		ug/m3	10	1

Project Name:	UNIFIRST PROPERTY IA / VI	**Lab Number:**	L1004705
Project Number:	1-2114-2	**Report Date:**	04/10/10

SAMPLE RESULTS

Lab ID:	L1004705-11	Date Collected:	04/01/10 00:00
Client ID:	CAN 1633 FC 208	Date Received:	04/02/10
Sample Location:	WOBURN, MA	Field Prep:	Not Specified
Matrix:	Air		
Analytical Method:	96,APH		
Analytical Date:	04/08/10 21:58		
Analyst:	RY		

Quality Control Information

Sample Type:	100 ml/min Composite
Sample Container Type:	Canister - 6 Liter
Sampling Flow Controller:	Mechanical
Sampling Zone:	Unknown
Sampling Flow Meter RPD of pre & post-sampling calibration check:	<=20%
Were all QA/QC procedures REQUIRED by the method followed?	Yes
Were all performance/acceptance standards for the required procedures achieved?	Yes
Were significant modifications made to the method as specified in Sect 11.1.2?	No

Parameter	Result	Qualifier	Units	RDL	Dilution Factor
Petroleum Hydrocarbons in Air - Mansfield Lab					
1,3-Butadiene	ND		ug/m3	2.0	1
Methyl tert butyl ether	ND		ug/m3	2.0	1
Benzene	ND		ug/m3	2.0	1
Toluene	ND		ug/m3	2.0	1
Ethylbenzene	ND		ug/m3	2.0	1
p/m-Xylene	ND		ug/m3	4.0	1
o-Xylene	ND		ug/m3	2.0	1
Naphthalene	ND		ug/m3	2.0	1
C5-C8 Aliphatics, Adjusted	ND		ug/m3	12	1
C9-C12 Aliphatics, Adjusted	ND		ug/m3	14	1
C9-C10 Aromatics	ND		ug/m3	10	1

Project Name:	UNIFIRST PROPERTY IA / VI	**Lab Number:**	L1004705
Project Number:	1-2114-2	**Report Date:**	04/10/10

SAMPLE RESULTS

Lab ID:	L1004705-12	Date Collected:	04/01/10 00:00
Client ID:	CAN 1655 FC 275	Date Received:	04/02/10
Sample Location:	WOBURN, MA	Field Prep:	Not Specified
Matrix:	Air		
Analytical Method:	96,APH		
Analytical Date:	04/08/10 22:33		
Analyst:	RY		

Quality Control Information

Sample Type:	100 ml/min Composite
Sample Container Type:	Canister - 6 Liter
Sampling Flow Controller:	Mechanical
Sampling Zone:	Unknown
Sampling Flow Meter RPD of pre & post-sampling calibration check:	<=20%
Were all QA/QC procedures REQUIRED by the method followed?	Yes
Were all performance/acceptance standards for the required procedures achieved?	Yes
Were significant modifications made to the method as specified in Sect 11.1.2?	No

Parameter	Result	Qualifier	Units	RDL	Dilution Factor
Petroleum Hydrocarbons in Air - Mansfield Lab					
1,3-Butadiene	ND		ug/m3	2.0	1
Methyl tert butyl ether	ND		ug/m3	2.0	1
Benzene	ND		ug/m3	2.0	1
Toluene	ND		ug/m3	2.0	1
Ethylbenzene	ND		ug/m3	2.0	1
p/m-Xylene	ND		ug/m3	4.0	1
o-Xylene	ND		ug/m3	2.0	1
Naphthalene	ND		ug/m3	2.0	1
C5-C8 Aliphatics, Adjusted	ND		ug/m3	12	1
C9-C12 Aliphatics, Adjusted	ND		ug/m3	14	1
C9-C10 Aromatics	ND		ug/m3	10	1

Project Name:	UNIFIRST PROPERTY IA / VI	**Lab Number:**	L1004705
Project Number:	1-2114-2	**Report Date:**	04/10/10

SAMPLE RESULTS

Lab ID:	L1004705-13	Date Collected:	04/01/10 00:00
Client ID:	CAN 969 FC 158	Date Received:	04/02/10
Sample Location:	WOBURN, MA	Field Prep:	Not Specified
Matrix:	Air		
Analytical Method:	96,APH		
Analytical Date:	04/08/10 23:10		
Analyst:	RY		

Quality Control Information

Sample Type:	100 ml/min Composite
Sample Container Type:	Canister - 6 Liter
Sampling Flow Controller:	Mechanical
Sampling Zone:	Unknown
Sampling Flow Meter RPD of pre & post-sampling calibration check:	<=20%
Were all QA/QC procedures REQUIRED by the method followed?	Yes
Were all performance/acceptance standards for the required procedures achieved?	Yes
Were significant modifications made to the method as specified in Sect 11.1.2?	No

Parameter	Result	Qualifier	Units	RDL	Dilution Factor
Petroleum Hydrocarbons in Air - Mansfield Lab					
1,3-Butadiene	ND		ug/m3	2.0	1
Methyl tert butyl ether	ND		ug/m3	2.0	1
Benzene	ND		ug/m3	2.0	1
Toluene	ND		ug/m3	2.0	1
Ethylbenzene	ND		ug/m3	2.0	1
p/m-Xylene	ND		ug/m3	4.0	1
o-Xylene	ND		ug/m3	2.0	1
Naphthalene	ND		ug/m3	2.0	1
C5-C8 Aliphatics, Adjusted	ND		ug/m3	12	1
C9-C12 Aliphatics, Adjusted	ND		ug/m3	14	1
C9-C10 Aromatics	ND		ug/m3	10	1

Project Name:	UNIFIRST PROPERTY IA / VI	**Lab Number:**	L1004705
Project Number:	1-2114-2	**Report Date:**	04/10/10

SAMPLE RESULTS

Lab ID:	L1004705-14	Date Collected:	04/01/10 00:00
Client ID:	CAN 696 FC 303	Date Received:	04/02/10
Sample Location:	WOBURN, MA	Field Prep:	Not Specified
Matrix:	Air		
Analytical Method:	96,APH		
Analytical Date:	04/08/10 23:44		
Analyst:	RY		

Quality Control Information

Sample Type:	100 ml/min Composite
Sample Container Type:	Canister - 6 Liter
Sampling Flow Controller:	Mechanical
Sampling Zone:	Unknown
Sampling Flow Meter RPD of pre & post-sampling calibration check:	<=20%
Were all QA/QC procedures REQUIRED by the method followed?	Yes
Were all performance/acceptance standards for the required procedures achieved?	Yes
Were significant modifications made to the method as specified in Sect 11.1.2?	No

Parameter	Result	Qualifier	Units	RDL	Dilution Factor
Petroleum Hydrocarbons in Air - Mansfield Lab					
1,3-Butadiene	ND		ug/m3	2.0	1
Methyl tert butyl ether	ND		ug/m3	2.0	1
Benzene	ND		ug/m3	2.0	1
Toluene	ND		ug/m3	2.0	1
Ethylbenzene	ND		ug/m3	2.0	1
p/m-Xylene	ND		ug/m3	4.0	1
o-Xylene	ND		ug/m3	2.0	1
Naphthalene	ND		ug/m3	2.0	1
C5-C8 Aliphatics, Adjusted	ND		ug/m3	12	1
C9-C12 Aliphatics, Adjusted	ND		ug/m3	14	1
C9-C10 Aromatics	ND		ug/m3	10	1

Project Name:	UNIFIRST PROPERTY IA / VI	**Lab Number:**	L1004705
Project Number:	1-2114-2	**Report Date:**	04/10/10

SAMPLE RESULTS

Lab ID:	L1004705-15	Date Collected:	04/01/10 00:00
Client ID:	CAN 1562 FC 166	Date Received:	04/02/10
Sample Location:	WOBURN, MA	Field Prep:	Not Specified
Matrix:	Air		
Analytical Method:	96,APH		
Analytical Date:	04/09/10 00:19		
Analyst:	RY		

Quality Control Information

Sample Type:	100 ml/min Composite
Sample Container Type:	Canister - 6 Liter
Sampling Flow Controller:	Mechanical
Sampling Zone:	Unknown
Sampling Flow Meter RPD of pre & post-sampling calibration check:	<=20%
Were all QA/QC procedures REQUIRED by the method followed?	Yes
Were all performance/acceptance standards for the required procedures achieved?	Yes
Were significant modifications made to the method as specified in Sect 11.1.2?	No

Parameter	Result	Qualifier	Units	RDL	Dilution Factor
Petroleum Hydrocarbons in Air - Mansfield Lab					
1,3-Butadiene	ND		ug/m3	2.0	1
Methyl tert butyl ether	ND		ug/m3	2.0	1
Benzene	ND		ug/m3	2.0	1
Toluene	ND		ug/m3	2.0	1
Ethylbenzene	ND		ug/m3	2.0	1
p/m-Xylene	ND		ug/m3	4.0	1
o-Xylene	ND		ug/m3	2.0	1
Naphthalene	ND		ug/m3	2.0	1
C5-C8 Aliphatics, Adjusted	ND		ug/m3	12	1
C9-C12 Aliphatics, Adjusted	ND		ug/m3	14	1
C9-C10 Aromatics	ND		ug/m3	10	1

Project Name:	UNIFIRST PROPERTY IA / VI	**Lab Number:**	L1004705
Project Number:	1-2114-2	**Report Date:**	04/10/10

SAMPLE RESULTS

Lab ID:	L1004705-16	Date Collected:	04/01/10 00:00
Client ID:	CAN 1576 FC 343	Date Received:	04/02/10
Sample Location:	WOBURN, MA	Field Prep:	Not Specified
Matrix:	Air		
Analytical Method:	96,APH		
Analytical Date:	04/09/10 00:55		
Analyst:	RY		

Quality Control Information

Sample Type:	100 ml/min Composite
Sample Container Type:	Canister - 6 Liter
Sampling Flow Controller:	Mechanical
Sampling Zone:	Unknown
Sampling Flow Meter RPD of pre & post-sampling calibration check:	<=20%
Were all QA/QC procedures REQUIRED by the method followed?	Yes
Were all performance/acceptance standards for the required procedures achieved?	Yes
Were significant modifications made to the method as specified in Sect 11.1.2?	No

Parameter	Result	Qualifier	Units	RDL	Dilution Factor
Petroleum Hydrocarbons in Air - Mansfield Lab					
1,3-Butadiene	ND		ug/m3	2.0	1
Methyl tert butyl ether	ND		ug/m3	2.0	1
Benzene	ND		ug/m3	2.0	1
Toluene	ND		ug/m3	2.0	1
Ethylbenzene	ND		ug/m3	2.0	1
p/m-Xylene	ND		ug/m3	4.0	1
o-Xylene	ND		ug/m3	2.0	1
Naphthalene	ND		ug/m3	2.0	1
C5-C8 Aliphatics, Adjusted	ND		ug/m3	12	1
C9-C12 Aliphatics, Adjusted	ND		ug/m3	14	1
C9-C10 Aromatics	ND		ug/m3	10	1

Project Name:	UNIFIRST PROPERTY IA / VI	**Lab Number:**	L1004705
Project Number:	1-2114-2	**Report Date:**	04/10/10

SAMPLE RESULTS

Lab ID:	L1004705-17	Date Collected:	04/01/10 00:00
Client ID:	CAN 932 FC 332	Date Received:	04/02/10
Sample Location:	WOBURN, MA	Field Prep:	Not Specified
Matrix:	Air		
Analytical Method:	96,APH		
Analytical Date:	04/09/10 01:28		
Analyst:	RY		

Quality Control Information

Sample Type:	100 ml/min Composite
Sample Container Type:	Canister - 6 Liter
Sampling Flow Controller:	Mechanical
Sampling Zone:	Unknown
Sampling Flow Meter RPD of pre & post-sampling calibration check:	<=20%
Were all QA/QC procedures REQUIRED by the method followed?	Yes
Were all performance/acceptance standards for the required procedures achieved?	Yes
Were significant modifications made to the method as specified in Sect 11.1.2?	No

Parameter	Result	Qualifier	Units	RDL	Dilution Factor
Petroleum Hydrocarbons in Air - Mansfield Lab					
1,3-Butadiene	ND		ug/m3	2.0	1
Methyl tert butyl ether	ND		ug/m3	2.0	1
Benzene	ND		ug/m3	2.0	1
Toluene	ND		ug/m3	2.0	1
Ethylbenzene	ND		ug/m3	2.0	1
p/m-Xylene	ND		ug/m3	4.0	1
o-Xylene	ND		ug/m3	2.0	1
Naphthalene	ND		ug/m3	2.0	1
C5-C8 Aliphatics, Adjusted	ND		ug/m3	12	1
C9-C12 Aliphatics, Adjusted	ND		ug/m3	14	1
C9-C10 Aromatics	ND		ug/m3	10	1

Project Name:	UNIFIRST PROPERTY IA / VI	**Lab Number:**	L1004705
Project Number:	1-2114-2	**Report Date:**	04/10/10

SAMPLE RESULTS

Lab ID:	L1004705-18	Date Collected:	04/01/10 00:00
Client ID:	CAN 1646 FC 090	Date Received:	04/02/10
Sample Location:	WOBURN, MA	Field Prep:	Not Specified
Matrix:	Air		
Analytical Method:	96,APH		
Analytical Date:	04/09/10 02:05		
Analyst:	RY		

Quality Control Information

Sample Type:	100 ml/min Composite
Sample Container Type:	Canister - 6 Liter
Sampling Flow Controller:	Mechanical
Sampling Zone:	Unknown
Sampling Flow Meter RPD of pre & post-sampling calibration check:	<=20%
Were all QA/QC procedures REQUIRED by the method followed?	Yes
Were all performance/acceptance standards for the required procedures achieved?	Yes
Were significant modifications made to the method as specified in Sect 11.1.2?	No

Parameter	Result	Qualifier	Units	RDL	Dilution Factor
Petroleum Hydrocarbons in Air - Mansfield Lab					
1,3-Butadiene	ND		ug/m3	2.0	1
Methyl tert butyl ether	ND		ug/m3	2.0	1
Benzene	ND		ug/m3	2.0	1
Toluene	ND		ug/m3	2.0	1
Ethylbenzene	ND		ug/m3	2.0	1
p/m-Xylene	ND		ug/m3	4.0	1
o-Xylene	ND		ug/m3	2.0	1
Naphthalene	ND		ug/m3	2.0	1
C5-C8 Aliphatics, Adjusted	ND		ug/m3	12	1
C9-C12 Aliphatics, Adjusted	ND		ug/m3	14	1
C9-C10 Aromatics	ND		ug/m3	10	1

Project Name:	UNIFIRST PROPERTY IA / VI	**Lab Number:**	L1004705
Project Number:	1-2114-2	**Report Date:**	04/10/10

SAMPLE RESULTS

Lab ID:	L1004705-19	Date Collected:	04/01/10 00:00
Client ID:	CAN 963 FC 451	Date Received:	04/02/10
Sample Location:	WOBURN, MA	Field Prep:	Not Specified
Matrix:	Air		
Analytical Method:	96,APH		
Analytical Date:	04/09/10 02:39		
Analyst:	RY		

Quality Control Information

Sample Type:	100 ml/min Composite
Sample Container Type:	Canister - 6 Liter
Sampling Flow Controller:	Mechanical
Sampling Zone:	Unknown
Sampling Flow Meter RPD of pre & post-sampling calibration check:	<=20%
Were all QA/QC procedures REQUIRED by the method followed?	Yes
Were all performance/acceptance standards for the required procedures achieved?	Yes
Were significant modifications made to the method as specified in Sect 11.1.2?	No

Parameter	Result	Qualifier	Units	RDL	Dilution Factor
Petroleum Hydrocarbons in Air - Mansfield Lab					
1,3-Butadiene	ND		ug/m3	2.0	1
Methyl tert butyl ether	ND		ug/m3	2.0	1
Benzene	ND		ug/m3	2.0	1
Toluene	ND		ug/m3	2.0	1
Ethylbenzene	ND		ug/m3	2.0	1
p/m-Xylene	ND		ug/m3	4.0	1
o-Xylene	ND		ug/m3	2.0	1
Naphthalene	ND		ug/m3	2.0	1
C5-C8 Aliphatics, Adjusted	ND		ug/m3	12	1
C9-C12 Aliphatics, Adjusted	ND		ug/m3	14	1
C9-C10 Aromatics	ND		ug/m3	10	1

Project Name:	UNIFIRST PROPERTY IA / VI	**Lab Number:**	L1004705
Project Number:	1-2114-2	**Report Date:**	04/10/10

SAMPLE RESULTS

Lab ID:	L1004705-20	Date Collected:	04/01/10 00:00
Client ID:	CAN 1556 FC 390	Date Received:	04/02/10
Sample Location:	WOBURN, MA	Field Prep:	Not Specified
Matrix:	Air		
Analytical Method:	96,APH		
Analytical Date:	04/09/10 03:14		
Analyst:	RY		

Quality Control Information

Sample Type:	100 ml/min Composite
Sample Container Type:	Canister - 6 Liter
Sampling Flow Controller:	Mechanical
Sampling Zone:	Unknown
Sampling Flow Meter RPD of pre & post-sampling calibration check:	<=20%
Were all QA/QC procedures REQUIRED by the method followed?	Yes
Were all performance/acceptance standards for the required procedures achieved?	Yes
Were significant modifications made to the method as specified in Sect 11.1.2?	No

Parameter	Result	Qualifier	Units	RDL	Dilution Factor
Petroleum Hydrocarbons in Air - Mansfield Lab					
1,3-Butadiene	ND		ug/m3	2.0	1
Methyl tert butyl ether	ND		ug/m3	2.0	1
Benzene	ND		ug/m3	2.0	1
Toluene	ND		ug/m3	2.0	1
Ethylbenzene	ND		ug/m3	2.0	1
p/m-Xylene	ND		ug/m3	4.0	1
o-Xylene	ND		ug/m3	2.0	1
Naphthalene	ND		ug/m3	2.0	1
C5-C8 Aliphatics, Adjusted	ND		ug/m3	12	1
C9-C12 Aliphatics, Adjusted	ND		ug/m3	14	1
C9-C10 Aromatics	ND		ug/m3	10	1

Project Name: UNIFIRST PROPERTY IA / VI **Lab Number:** L1004705

Project Number: 1-2114-2 **Report Date:** 04/10/10

Method Blank Analysis
Batch Quality Control

Analytical Method: 96,APH
Analytical Date: 04/08/10 14:34
Analyst: RY

Parameter	Result	Qualifier	Units	RDL
Petroleum Hydrocarbons in Air - Mansfield Lab for sample(s): 01-20 Batch: WG406612-4				
1,3-Butadiene	ND		ug/m3	2.0
Methyl tert butyl ether	ND		ug/m3	2.0
Benzene	ND		ug/m3	2.0
Toluene	ND		ug/m3	2.0
Ethylbenzene	ND		ug/m3	2.0
p/m-Xylene	ND		ug/m3	4.0
o-Xylene	ND		ug/m3	2.0
Naphthalene	ND		ug/m3	2.0
C5-C8 Aliphatics, Adjusted	ND		ug/m3	12
C9-C12 Aliphatics, Adjusted	ND		ug/m3	14
C9-C10 Aromatics	ND		ug/m3	10

Lab Control Sample Analysis
Batch Quality Control

Project Name: UNIFIRST PROPERTY IA / VI
Project Number: 1-2114-2

Lab Number: L1004705
Report Date: 04/10/10

Parameter	LCS %Recovery	Qual	LCSD %Recovery	Qual	%Recovery Limits	RPD	Qual	RPD Limits
Petroleum Hydrocarbons in Air - Mansfield Lab Associated sample(s): 01-20 Batch: WG406612-3								
1,3-Butadiene	109		-		70-130	-		
Methyl tert butyl ether	125		-		70-130	-		
Benzene	108		-		70-130	-		
Toluene	112		-		70-130	-		
Ethylbenzene	108		-		70-130	-		
p/m-Xylene	104		-		70-130	-		
o-Xylene	105		-		70-130	-		
Naphthalene	118		-		50-150	-		
C5-C8 Aliphatics, Adjusted	106		-		70-130	-		
C9-C12 Aliphatics, Adjusted	115		-		70-130	-		
C9-C10 Aromatics	89		-		70-130	-		

Project Name: UNIFIRST PROPERTY IA / VI
Project Number: 1-2114-2

Lab Number: L1004705
Report Date: 04/10/10

Sample Receipt and Container Information

Were project specific reporting limits specified? YES

Cooler Information

Cooler	Custody Seal
NA	Absent

Container Information

Container ID	Container Type	Cooler	pH	Temp deg C	Pres	Seal	Analysis
L1004705-01A	Canister - 6 Liter	NA	NA	NA	NA	Absent	APH-10(30),TO15-SIM(30)
L1004705-02A	Canister - 6 Liter	NA	NA	NA	NA	Absent	APH-10(30),TO15-SIM(30)
L1004705-03A	Canister - 6 Liter	NA	NA	NA	NA	Absent	APH-10(30),TO15-SIM(30)
L1004705-04A	Canister - 6 Liter	NA	NA	NA	NA	Absent	APH-10(30),TO15-SIM(30)
L1004705-05A	Canister - 6 Liter	NA	NA	NA	NA	Absent	APH-10(30),TO15-SIM(30)
L1004705-06A	Canister - 6 Liter	NA	NA	NA	NA	Absent	APH-10(30),TO15-SIM(30)
L1004705-07A	Canister - 6 Liter	NA	NA	NA	NA	Absent	APH-10(30),TO15-SIM(30)
L1004705-08A	Canister - 6 Liter	NA	NA	NA	NA	Absent	APH-10(30),TO15-SIM(30)
L1004705-09A	Canister - 6 Liter	NA	NA	NA	NA	Absent	APH-10(30),TO15-SIM(30)
L1004705-10A	Canister - 6 Liter	NA	NA	NA	NA	Absent	APH-10(30),TO15-SIM(30)
L1004705-11A	Canister - 6 Liter	NA	NA	NA	NA	Absent	APH-10(30),TO15-SIM(30)
L1004705-12A	Canister - 6 Liter	NA	NA	NA	NA	Absent	APH-10(30),TO15-SIM(30)
L1004705-13A	Canister - 6 Liter	NA	NA	NA	NA	Absent	APH-10(30),TO15-SIM(30)
L1004705-14A	Canister - 6 Liter	NA	NA	NA	NA	Absent	APH-10(30),TO15-SIM(30)
L1004705-15A	Canister - 6 Liter	NA	NA	NA	NA	Absent	APH-10(30),TO15-SIM(30)
L1004705-16A	Canister - 6 Liter	NA	NA	NA	NA	Absent	APH-10(30),TO15-SIM(30)
L1004705-17A	Canister - 6 Liter	NA	NA	NA	NA	Absent	APH-10(30),TO15-SIM(30)
L1004705-18A	Canister - 6 Liter	NA	NA	NA	NA	Absent	APH-10(30),TO15-SIM(30)
L1004705-19A	Canister - 6 Liter	NA	NA	NA	NA	Absent	APH-10(30),TO15-SIM(30)
L1004705-20A	Canister - 6 Liter	NA	NA	NA	NA	Absent	APH-10(30),TO15-SIM(30)

*Hold days indicated by values in parentheses

Project Name:	UNIFIRST PROPERTY IA / VI	**Lab Number:**	L1004705
Project Number:	1-2114-2	**Report Date:**	04/10/10

GLOSSARY

Acronyms

EPA · Environmental Protection Agency.

LCS · Laboratory Control Sample: A sample matrix, free from the analytes of interest, spiked with verified known amounts of analytes or a material containing known and verified amounts of analytes.

LCSD · Laboratory Control Sample Duplicate: Refer to LCS.

MS · Matrix Spike Sample: A sample prepared by adding a known mass of target analyte to a specified amount of matrix sample for which an independent estimate of target analyte concentration is available.

MSD · Matrix Spike Sample Duplicate: Refer to MS.

NA · Not Applicable.

NC · Not Calculated: Term is utilized when one or more of the results utilized in the calculation are non-detect at the parameter's reporting unit.

NI · Not Ignitable.

RDL · Reported Detection Limit: The value at which an instrument can accurately measure an analyte at a specific concentration. The RDL includes any adjustments from dilutions, concentrations or moisture content, where applicable.

RPD · Relative Percent Difference: The results from matrix and/or matrix spike duplicates are primarily designed to assess the precision of analytical results in a given matrix and are expressed as relative percent difference (RPD). Values which are less than five times the reporting limit for any individual parameter are evaluated by utilizing the absolute difference between the values; although the RPD value will be provided in the report.

Terms

Analytical Method: Both the document from which the method originates and the analytical reference method. (Example: EPA 8260B is shown as 1,8260B.) The codes for the reference method documents are provided in the References section of the Addendum.

Data Qualifiers

A · Spectra identified as "Aldol Condensation Product".

B · The analyte was detected above the reporting limit in the associated method blank. Flag only applies to associated field samples that have detectable concentrations of the analyte at less than five times (5x) the concentration found in the blank. For DOD-related projects, flag only applies to associated field samples that have detectable concentrations of the analyte at less than ten times (10x) the concentration found in the blank AND the analyte was detected above one-half the reporting limit (or above the reporting limit for common lab contaminants) in the associated method blank.

D · Concentration of analyte was quantified from diluted analysis. Flag only applies to field samples that have detectable concentrations of the analyte.

E · Concentration of analyte exceeds the range of the calibration curve and/or linear range of the instrument.

H · The analysis of pH was performed beyond the regulatory-required holding time of 15 minutes from the time of sample collection.

P · The RPD between the results for the two columns exceeds the method-specified criteria.

Q · The quality control sample exceeds the associated acceptance criteria. Note: This flag is not applicable for matrix spike recoveries when the sample concentration is greater than 4x the spike added or for batch duplicate RPD when the sample concentrations are less than 5x the RDL. (Metals only.)

R · Analytical results are from sample re-analysis.

RE · Analytical results are from sample re-extraction.

J · Estimated value. This represents an estimated concentration for Tentatively Identified Compounds (TICs).

ND · Not detected at the reported detection limit (RDL) for the sample.

Report Format: Data Usability Report

Project Name:	UNIFIRST PROPERTY IA / VI	**Lab Number:**	L1004705
Project Number:	1-2114-2	**Report Date:**	04/10/10

REFERENCES

48 Compendium of Methods for the Determination of Toxic Organic Compounds in Ambient Air. Second Edition. EPA/625/R-96/010b, January 1999.

96 Method for the Determination of Air-Phase Petroleum Hydrocarbons (APH), Massachusetts Department of Environmental Protection (MassDEP), December 2009, Revision 1.

LIMITATION OF LIABILITIES

Alpha Analytical performs services with reasonable care and diligence normal to the analytical testing laboratory industry. In the event of an error, the sole and exclusive responsibility of Alpha Woods Hole Labs shall be to re-perform the work at it's own expense. In no event shall Alpha Analytical be held liable for any incidental, consequential or special damages, including but not limited to, damages in any way connected with the use of, interpretation of, information or analysis provided by Alpha Woods Hole Labs.

We strongly urge our clients to comply with EPA protocol regarding sample volume, preservation, cooling, containers, sampling procedures, holding time and splitting of samples in the field.

Certificate/Approval Program Summary

Last revised December 15, 2009 – Mansfield Facility

The following list includes only those analytes/methods for which certification/approval is currently held.
For a complete listing of analytes for the referenced methods, please contact your Alpha Customer Service Representative.

Connecticut Department of Public Health Certificate/Lab ID: PH-0141.

Wastewater/Non-Potable Water (Inorganic Parameters: pH, Turbidity, Conductivity, Alkalinity, Aluminum, Antimony, Arsenic, Barium, Beryllium, Boron, Cadmium, Calcium, Chromium, Cobalt, Copper, Iron, Lead, Magnesium, Manganese, Mercury, Molybdenum, Nickel, Potassium, Selenium, Silver, Sodium, Strontium, Thallium, Tin, Vanadium, Zinc, Total Residue (Solids), Total Suspended Solids (non-filterable), Total Cyanide. Organic Parameters: PCBs, Organochlorine Pesticides, Technical Chlordane, Toxaphene, Acid Extractables, Benzidines, Phthalate Esters, Nitrosamines, Nitroaromatics & Isophorone, PAHs, Haloethers, Chlorinated Hydrocarbons, Volatile Organics.)

Solid Waste/Soil (Inorganic Parameters: pH, Aluminum, Antimony, Arsenic, Barium, Beryllium, Cadmium, Calcium, Chromium, Hexavalent Chromium, Cobalt, Copper, Iron, Lead, Magnesium, Manganese, Mercury, Molybdenum, Nickel, Potassium, Selenium, Silver, Sodium, Thallium, Vanadium, Zinc, Total Organic Carbon, Total Cyanide, Corrosivity, TCLP 1311. Organic Parameters: PCBs, Organochlorine Pesticides, Technical Chlordane, Toxaphene, Volatile Organics, Acid Extractables, Benzidines, Phthalates, Nitrosamines, Nitroaromatics & Cyclic Ketones, PAHs, Haloethers, Chlorinated Hydrocarbons.)

Florida Department of Health Certificate/Lab ID: E87814. ***NELAP Accredited.***

Non-Potable Water (Inorganic Parameters: SM2320B, EPA 120.1, SM2510B, EPA 245.1, EPA 150.1, EPA 160.2, SM2540D, EPA 335.2, SM2540G, EPA 180.1. Organic Parameters: EPA 625, 608.)

Solid & Chemical Materials (Inorganic Parameters: 6020, 7470, 7471, 9045, 9014. Organic Parameters: EPA 8260, 8270, 8082, 8081.)

Air & Emissions (EPA TO-15.)

Louisiana Department of Environmental Quality Certificate/Lab ID: 03090. ***NELAP Accredited.***

Non-Potable Water (Inorganic Parameters: EPA 120.1, 150.1, 160.2, 180.1, 200.8, 245.1, 310.1, 335.2, 608, 625, 1631, 3010, 3015, 3020, 6020, 9010, 9014, 9040, SM2320B, 2510B, 2540D, 2540G, 4500CN-E, 4500H-B, Organic Parameters: EPA 3510, 3580, 3630, 3640, 3660, 3665, 5030, 8015 (mod), 3570, 8081, 8082, 8260, 8270,)

Solid & Chemical Materials (Inorganic Parameters: 6020, 7196, 7470, 7471, 7474, 9010, 9014, 9040, 9045, 9060. Organic Parameters: EPA 8015 (mod), EPA 3570, 1311, 3050, 3051, 3060, 3580, 3630, 3640, 3660, 3665, 5035, 8081, 8082, 8260, 8270.)

Biological Tissue (Inorganic Parameters: EPA 6020. Organic Parameters: EPA 3570, 3510, 3610, 3630, 3640, 8270.)

Maine Department of Human Services Certificate/Lab ID: MA0030.

Wastewater (Inorganic Parameters: EPA 120.1, 300.0, SM 2320, 2510B, 2540C, 2540D, EPA 245.1. Organic Parameters: 608, 624.)

Massachusetts Department of Environmental Protection Certificate/Lab ID: M-MA030.

Non-Potable Water (Inorganic Parameters: SM4500H+B. Organic Parameters: EPA 624.)

New Hampshire Department of Environmental Services Certificate/Lab ID: 2206. ***NELAP Accredited.***

Non-Potable Water (Inorganic Parameters: EPA 200.8, 245.1, 1631E, 120.1, 150.1, 180.1, 310.1, 335.2, 160.2, SM2540D, 2540G, 4500CN-E, 4500H+B, 2320B, 2510B. Organic Parameters: EPA 625, 608.)

New Jersey Department of Environmental Protection Certificate/Lab ID: MA015. ***NELAP Accredited.***

Non-Potable Water (Inorganic Parameters: SW-846 1312, 3010, 3020A, 3015, 6020, SM2320B, EPA 200.8, SM2540C, 2540D, 2540G, EPA 120.1, SM2510B, EPA 180.1, 245.1, 1631E, SW-846 9040B, 6020, 9010B, 9014 Organic Parameters: EPA 608, 625, SW-846 3510C, 3580A, 5030B, 3035L, 5035H, 3630C, 3640A, 3660B, 3665A, 8081A, 8082 8260B, 8270C)

Solid & Chemical Materials (Inorganic Parameters: SW-846 6020, 9010B, 9014, 1311, 1312, 3050B, 3051, 3060A, 7196A, 7470A, 7471A, 9045C, 9060. Organic Parameters: SW-846 3580A, 5030B, 3035L, 5035H, 3630C, 3640A, 3660B, 3665A, 8081A, 8082, 8260B, 8270C, 3570, 8015B.)

Atmospheric Organic Parameters (EPA TO-15)

Biological Tissue (Inorganic Parameters: SW-846 6020 Organic Parameters: SW-846 8270C, 3510C, 3570, 3610B, 3630C, 3640A)

New York Department of Health Certificate/Lab ID: 11627. ***NELAP Accredited.***

Non-Potable Water (Inorganic Parameters: EPA 310.1, SM2320B, EPA 365.2, 160.1, EPA 160.2, SM2540D, EPA 200.8, 6020, 1631E, 245.1, 335.2, 9014, 150.1, 9040B, 120.1, SM2510B, EPA 376.2, 180.1, 9010B. Organic Parameters: EPA 624, 8260B, 8270C, 608, 8081A, 625, 8082, 3510C, 3511, 5030B.)

Solid & Hazardous Waste (Inorganic Parameters: EPA 9040B, 9045C, SW-846 Ch7 Sec 7.3, EPA 6020, 7196A, 7471A, 7474, 9014, 9040B, 9045C, 9010B. Organic Parameters: EPA 8260B, 8270C, 8081A, DRO 8015B, 8082, 1311, 3050B, 3580, 3050B, 3035, 3570, 3051, 5035, 5030B.)

Air & Emissions (EPA TO-15.)

Pennsylvania Department of Environmental Protection Certificate/Lab ID: 68-02089. ***NELAP Accredited.***

Non-Potable Water (Organic Parameters: EPA 5030B, EPA 8260)

Rhode Island Department of Health Certificate/Lab ID: LAO00299. ***NELAP Accredited via LA-DEQ.***

Refer to MA-DEP Certificate for Non-Potable Water.

Refer to LA-DEQ Certificate for Non-Potable Water.

Texas Commission of Environmental Quality Certificate/Lab ID: T104704419-08-TX. ***NELAP Accredited.***

Solid & Chemical Materials (Inorganic Parameters: EPA 6020, 7470, 7471, 1311, 7196, 9014, 9040, 9045, 9060. Organic Parameters: EPA 8015, 8270, 8260, 8081, 8082.)

U.S. Army Corps of Engineers

Department of Defense Certificate/Lab ID: L2217.01.

Non-Potable Water (Inorganic Parameters: EPA 3005A,3020, 6020, 245.1, 245.7, 1631E, 7470A, 7474, 9014, 120.1, 9050A, 180.1, SM4500H-B, 2320B, 2510B, 2540D,9040. Organic Parameters: EPA 3510C, 5030B, 9010B, 624, 8260B, 8270C, 8270 Alk-PAH, 8082, 8081A, 8015 (SHC), 8015 (DRO).)

Solid & Hazardous Waste (Inorganic Parameters: EPA 1311, 1312,3051, 6020, 747A, 7474, 9045C,9060, SM 2540G, ASTM D422-63. Organic Parameters: EPA 3580, 3570, 3540C, 5035, 8260B, 8270C, 8270 Alk-PAH, 8082, 8081A, 8015 (SHC), 8015 (DRO).

Air & Emissions (EPA TO-15.)

Analytes Not Accredited by NELAP
Certification is not available by NELAP for the following analytes: **8270C:** Biphenyl.

AIR ANALYSIS

ALPHA ANALYTICAL — CHAIN OF CUSTODY

PAGE 1 OF 2

Date Rec'd in Lab:

ALPHA Job #: L0047705

320 Forbes Blvd, Mansfield, MA 02048
TEL: 508-822-9300 FAX: 508-822-3288

Client Information

Client: Johnson Co.
Address:
Phone:
Fax:
Email:
☐ These samples have been previously analyzed by Alpha

Project Information

Project Name: Unisirsd/wells G&H
Project Location:
Project #:
Project Manager: Bob Osborne
ALPHA Quote #:

Turn-Around Time

☐ Standard ☐ RUSH (only confirmed if pre-approved!)
Date Due: Time:

Report Information - Data Deliverables

☐ FAX
☐ ADEx
Criteria Checker:
(Default based on Regulatory Criteria Indicated)
Other Formats:
☐ EMAIL (standard pdf report)
☐ Additional Deliverables:
Report to: (if different than Project Manager)

Billing Information

☐ Same as Client info PO #:

Regulatory Requirements/Report Limits

State/Fed	Program	Criteria

Other Project Specific Requirements/Comments:

All Columns Below Must Be Filled Out

ALPHA Lab ID (Lab Use Only)	Sample ID	Collection Date	Start Time	End Time	Initial Vacuum	Final Vacuum	Sample Matrix*	Sampler's Initials	Can Size	ID Can	ID - Flow Controller	TO-14A by TO-15	TO-15	TO-15 SIM	APH	FIXED GASES	TO-13A	TO-4/TO-10	Sample Comments (i.e. PID)
L0047705-01	Can 652 FC 466	4/1/10					SU							✓	✓				
-02	Can 998 FC 045																		
-03	Can 1706 FC 291																		
-04	Can 1692 FC 368																		
-05	Can 965 FC 367																		
-06	Can 587 FC 465																		
-07	Can 956 FC 019																		
-08	Can 1520 FC 463																		
-09	Can 764 FC 257																		
-10	Can 1053 FC 269																		

*SAMPLE MATRIX CODES
AA = Ambient Air (Indoor/Outdoor)
SV = Soil Vapor/Landfill Gas/SVE
Other = Please Specify

Container Type

Relinquished By:	Date/Time	Received By:	Date/Time:
[illegible]	4/1/10		

Please print clearly, legibly and completely. Samples can not be logged in and turnaround time clock will not start until any ambiguities are resolved. All samples submitted are subject to Alpha's Terms and Conditions. See reverse side.

Form No: 101-02 (19-Jun-09)

04101021:12

AIR ANALYSIS

PAGE: 2 OF 2

ALPHA ANALYTICAL

CHAIN OF CUSTODY

320 Forbes Blvd, Mansfield, MA 02048
TEL: 508-822-9300 FAX: 508-822-3288

Date Rec'd In Lab:

ALPHA Job #: L1004705

Client Information

Client: Johnson Co.
Address:
Phone:
Fax:
Email:
☐ These samples have been previously analyzed by Alpha

Project Information

Project Name: Universal / Wells G&H
Project Location:
Project #:
Project Manager: Bob Osborne
ALPHA Quote #:

Turn-Around Time

☐ Standard ☐ RUSH (only confirmed if pre-approved)
Date Due: Time:

Report Information - Data Deliverables

☐ FAX
☐ ADEx
Criteria Checker:
(Default based on Regulatory Criteria Indicated)
Other Formats:
☐ EMAIL (standard pdf report)
☐ Additional Deliverables:
Report to: (if different than Project Manager)

Billing Information

☐ Same as Client info PO #:

Regulatory Requirements/Report Limits

State/Fed	Program	Criteria

Other Project Specific Requirements/Comments:

All Columns Below Must Be Filled Out

ALPHA Lab ID (Lab Use Only)	Sample ID	Collection Date	Start Time	End Time	Initial Vacuum	Final Vacuum	Sample Matrix*	Sampler's Initials	Can Size	I D Can	I D - Flow Controller	TO-14A by TO-15	TO-15	TO-15 SIM	APH	FIXED GASES	TO-13A	TO-4 / TO-10	Sample Comments (i.e. PID)
1004705-11	Can 1633 FC 208	4/1/10					SV							✓	✓				
-12	Can 1655 FC 275	↓					↓							↓	↓				
-13	Can 969 FC 158																		
-14	Can 1696 FC 303																		
-15	Can 1562 FC 166																		
-16	Can 1576 FC 343																		
-17	Can 932 FC 332																		
-18	Can 1646 FC 090																		
-19	Can 963 FC 451																		
-20	Can 1556 FC 390																		

*SAMPLE MATRIX CODES
AA = Ambient Air (Indoor/Outdoor)
SV = Soil Vapor/Landfill Gas/SVE
Other = Please Specify

Container Type

Relinquished By:	Date/Time	Received By:	Date/Time:
[signature]	4/1/10		

Please print clearly, legibly and completely. Samples can not be logged in and turnaround time clock will not start until any ambiguities are resolved. All samples submitted are subject to Alpha's Terms and Conditions. See reverse side.

Form No: 101-02 (19-Jun-09)

04101021:12

1-2114-2
Canister and Flow Controler
Certification Reports

04101021:32

ALPHA ANALYTICAL

ANALYTICAL REPORT

Lab Number:	L1004721
Client:	The Johnson Company, Inc 100 State Street Suite 600 Montpelier, VT 05602
ATTN:	Bettina Longino
Project Name:	UNIFIRST PROPERTY IA / VI
Project Number:	1-2114-2
Report Date:	04/10/10

Certifications & Approvals: MA (M-MA030), NY (11627), CT (PH-0141), NH (2206), NJ (MA015), RI (LAO00299), ME (MA0030), PA (Registration #68-02089), LA NELAC (03090), FL NELAC (E87814), US Army Corps of Engineers.

320 Forbes Boulevard, Mansfield, MA 02048-1806
508-822-9300 (Fax) 508-822-3288 800-624-9220 - www.alphalab.com

Project Name: UNIFIRST PROPERTY IA / VI
Project Number: 1-2114-2

Lab Number: L1004721
Report Date: 04/10/10

Alpha Sample ID	Client ID	Sample Location	Collection Date/Time
L1004721-01	CAN 785 FC 298	WOBURN, MA	04/02/10 00:00
L1004721-03	CAN 1559 FC 074	WOBURN, MA	04/02/10 00:00
L1004721-04	CAN 945 FC 256	WOBURN, MA	04/02/10 00:00
L1004721-05	CAN 762 FC 233	WOBURN, MA	04/02/10 00:00
L1004721-06	CAN 1707 FC 356	WOBURN, MA	04/02/10 00:00
L1004721-07	CAN 983 FC 349	WOBURN, MA	04/02/10 00:00
L1004721-08	CAN 618 FC 047	WOBURN, MA	04/02/10 00:00
L1004721-09	CAN 1667 FC 379	WOBURN, MA	04/02/10 00:00
L1004721-10	CAN 584 FC 081	WOBURN, MA	04/02/10 00:00
L1004721-11	CAN 1036 FC 333	WOBURN, MA	04/02/10 00:00
L1004721-12	CAN 782 FC 175	WOBURN, MA	04/02/10 00:00
L1004721-13	CAN 1628 FC 360	WOBURN, MA	04/02/10 00:00
L1004721-14	CAN 972 FC 277	WOBURN, MA	04/02/10 00:00
L1004721-15	CAN 1690 FC 028	WOBURN, MA	04/02/10 00:00
L1004721-16	CAN 1614 FC 309	WOBURN, MA	04/02/10 00:00
L1004721-17	CAN 639 FC 231	WOBURN, MA	04/02/10 00:00
L1004721-18	CAN 1566 FC 262	WOBURN, MA	04/02/10 00:00
L1004721-19	CAN 1626 FC 002	WOBURN, MA	04/02/10 00:00
L1004721-20	CAN 695 FC 290	WOBURN, MA	04/02/10 00:00
L1004721-21	CAN 609 FC 183	WOBURN, MA	04/02/10 00:00
L1004721-22	CAN 1676 FC 205	WOBURN, MA	04/02/10 00:00
L1004721-23	CAN 986 FC 406	WOBURN, MA	04/02/10 00:00
L1004721-24	CAN 1704 FC 369	WOBURN, MA	04/02/10 00:00
L1004721-25	CAN 949 FC 242	WOBURN, MA	04/02/10 00:00

Project Name:	UNIFIRST PROPERTY IA / VI	**Lab Number:**	L1004721
Project Number:	1-2114-2	**Report Date:**	04/10/10

MADEP MCP Response Action Analytical Report Certification

This form provides certifications for all samples performed by MCP methods. Please refer to the Sample Results and Container Information sections of this report for specification of MCP methods used for each analysis. The following questions pertain only to MCP Analytical Methods.

An affirmative response to questions A, B, C & D is required for "Presumptive Certainty" status		
A	Were all samples received by the laboratory in a condition consistent with those described on their Chain-of-Custody documentation for the data set?	YES
B	Were all QA/QC procedures required for the specified analytical methods(s) included in this report followed, including the requirement to note and discuss in a narrative QC data that did not meet appropriate performance standards or guidelines?	YES
C	Does the analytical data included in this report meet all the requirements for "Presumptive Certainty", as described in section 2.0 of the MADEP document CAM VII A, "Quality Assurance and Quality Control Guidelines for the Acquisition and Reporting of Analytical Data"?	YES
D	VPH and EPH methods only: Was the VPH or EPH method run without significant modifications, as specified in Section 11.3?	N/A

A response to questions E and F is required for "Presumptive Certainty" status		
E	Were all QC performance standards and recommendations for the specified method(s) achieved?	YES
F	Were results for all analyte-list compounds/elements for the specified method(s) reported?	YES

For any questions answered "No", please refer to the case narrative section on the following page(s).

Please note that sample matrix information is located in the Sample Results section of this report.

Project Name:	UNIFIRST PROPERTY IA / VI	**Lab Number:**	L1004721
Project Number:	1-2114-2	**Report Date:**	04/10/10

Case Narrative

The samples were received in accordance with the Chain of Custody and no significant deviations were encountered during the preparation or analysis unless otherwise noted. Sample Receipt, Container Information, and the Chain of Custody are located at the back of the report.

Results contained within this report relate only to the samples submitted under this Alpha Lab Number and meet all of the requirements of NELAC, for all NELAC accredited parameters. The data presented in this report is organized by parameter (i.e. VOC, SVOC, etc.). Sample specific Quality Control data (i.e. Surrogate Spike Recovery) is reported at the end of the target analyte list for each individual sample, followed by the Laboratory Batch Quality Control at the end of each parameter. If a sample was re-analyzed or re-extracted due to a required quality control corrective action and if both sets of data are reported, the Laboratory ID of the re-analysis or re-extraction is designated with an "R" or "RE", respectively. When multiple Batch Quality Control elements are reported (e.g. more than one LCS), the associated samples for each element are noted in the grey shaded header line of each data table. Any Laboratory Batch, Sample Specific % recovery or RPD value that is outside the listed Acceptance Criteria is bolded in the report. Definitions of all data qualifiers and acronyms used in this report are provided in the Glossary located at the back of the report.

Please see the associated ADEx data file for a comparison of laboratory reporting limits that were achieved with the regulatory Numerical Standards requested on the Chain of Custody.

For additional information, please contact Client Services at 800-624-9220.

Individual Canister and Flow Controller Certification.

Volatile Organics in Air (SIM)

1,2-Dibromoethane and Naphthalene were evaluated to 1/2 the RL and are 'J' qualified if the concentration is below the quantitation limit (RDL), but greater than or equal to 1/2 the RDL. Values are estimated.

MCP Related Narratives

Petroleum Hydrocarbons in Air

The internal standards were within method criteria.

The WG407080-3 LCS recoveries for Ethyl benzene (132%) and o-Xylene (131%) are above the 70%-130% acceptance limit. The associated samples did not have reportable concentrations of Ethyl benzene or o-Xylene, therefore the results were released without qualification per the method.

Project Name:	UNIFIRST PROPERTY IA / VI	**Lab Number:**	L1004721
Project Number:	1-2114-2	**Report Date:**	04/10/10

Case Narrative (continued)

I, the undersigned, attest under the pains and penalties of perjury that, to the best of my knowledge and belief and based upon my personal inquiry of those responsible for providing the information contained in this analytical report, such information is accurate and complete. This certificate of analysis is not complete unless this page accompanies any and all pages of this report.

Authorized Signature: Kathleen M. Ahern

Title: Technical Director/Representative

Date: 04/10/10

AIR

Project Name: UNIFIRST PROPERTY IA / VI
Project Number: 1-2114-2

Lab Number: L1004721
Report Date: 04/10/10

SAMPLE RESULTS

Lab ID: L1004721-01
Client ID: CAN 785 FC 298
Sample Location: WOBURN, MA
Matrix: Air
Anaytical Method: 48,TO-15-SIM
Analytical Date: 04/06/10 08:08
Analyst: AJ

Date Collected: 04/02/10 00:00
Date Received: 04/03/10
Field Prep: Not Specified

Parameter	ppbV Results	ppbV RDL	ug/m3 Results	ug/m3 RDL	Qualifier	Dilution Factor
Volatile Organics in Air by SIM - Mansfield Lab						
1,1,1-Trichloroethane	ND	0.020	ND	0.109		1
1,1,2-Trichloroethane	ND	0.020	ND	0.109		1
1,1-Dichloroethane	ND	0.020	ND	0.081		1
1,1-Dichloroethene	ND	0.020	ND	0.079		1
1,2,4-Trimethylbenzene	ND	0.020	ND	0.098		1
1,2-Dibromoethane	ND	0.020	ND	0.154		1
1,2-Dichlorobenzene	ND	0.020	ND	0.120		1
1,2-Dichloroethane	ND	0.020	ND	0.081		1
1,3-Butadiene	ND	0.020	ND	0.044		1
1,3-Dichlorobenzene	ND	0.020	ND	0.120		1
1,4-Dichlorobenzene	ND	0.020	ND	0.120		1
Benzene	ND	0.070	ND	0.223		1
Bromodichloromethane	ND	0.020	ND	0.134		1
Bromoform	ND	0.020	ND	0.206		1
Carbon tetrachloride	ND	0.020	ND	0.126		1
Chlorobenzene	ND	0.020	ND	0.092		1
Chloroform	ND	0.020	ND	0.098		1
cis-1,2-Dichloroethene	ND	0.020	ND	0.079		1
Ethylbenzene	ND	0.020	ND	0.087		1
Methylene chloride	ND	0.500	ND	1.74		1
Methyl tert butyl ether	ND	0.020	ND	0.072		1
Naphthalene	ND	0.050	ND	0.262		1
Xylenes, Total	ND	0.060	ND	0.260		1
Tetrachloroethene	ND	0.020	ND	0.136		1
Toluene	ND	0.050	ND	0.188		1

Project Name: UNIFIRST PROPERTY IA / VI
Project Number: 1-2114-2

Lab Number: L1004721
Report Date: 04/10/10

SAMPLE RESULTS

Lab ID: L1004721-01
Client ID: CAN 785 FC 298
Sample Location: WOBURN, MA

Date Collected: 04/02/10 00:00
Date Received: 04/03/10
Field Prep: Not Specified

Parameter	ppbV Results	ppbV RDL	ug/m3 Results	ug/m3 RDL	Qualifier	Dilution Factor
Volatile Organics in Air by SIM - Mansfield Lab						
trans-1,2-Dichloroethene	ND	0.020	ND	0.079		1
trans-1,3-Dichloropropene	ND	0.020	ND	0.091		1
Trichloroethene	ND	0.020	ND	0.107		1
Vinyl chloride	ND	0.020	ND	0.051		1
Isopropylbenzene	ND	0.500	ND	2.46		1

Project Name: UNIFIRST PROPERTY IA / VI
Project Number: 1-2114-2

Lab Number: L1004721
Report Date: 04/10/10

SAMPLE RESULTS

Lab ID: L1004721-03
Client ID: CAN 1559 FC 074
Sample Location: WOBURN, MA
Matrix: Air
Anaytical Method: 48,TO-15-SIM
Analytical Date: 04/05/10 21:34
Analyst: AJ

Date Collected: 04/02/10 00:00
Date Received: 04/03/10
Field Prep: Not Specified

Parameter	ppbV Results	ppbV RDL	ug/m3 Results	ug/m3 RDL	Qualifier	Dilution Factor
Volatile Organics in Air by SIM - Mansfield Lab						
1,1,1-Trichloroethane	ND	0.020	ND	0.109		1
1,1,2-Trichloroethane	ND	0.020	ND	0.109		1
1,1-Dichloroethane	ND	0.020	ND	0.081		1
1,1-Dichloroethene	ND	0.020	ND	0.079		1
1,2,4-Trimethylbenzene	ND	0.020	ND	0.098		1
1,2-Dibromoethane	ND	0.020	ND	0.154		1
1,2-Dichloroethane	ND	0.020	ND	0.081		1
1,2-Dichloropropane	ND	0.020	ND	0.092		1
1,3-Buladiene	ND	0.020	ND	0.044		1
1,3-Dichlorobenzene	ND	0.020	ND	0.120		1
1,4-Dichlorobenzene	ND	0.020	ND	0.120		1
Benzene	ND	0.070	ND	0.223		1
Bromodichloromethane	ND	0.020	ND	0.134		1
Bromoform	ND	0.020	ND	0.206		1
Carbon tetrachloride	ND	0.020	ND	0.126		1
Chlorobenzene	ND	0.020	ND	0.092		1
Chloroform	ND	0.020	ND	0.098		1
cis-1,2-Dichloroethene	ND	0.020	ND	0.079		1
Ethylbenzene	ND	0.020	ND	0.087		1
Methylene chloride	ND	0.500	ND	1.74		1
Methyl tert butyl ether	ND	0.020	ND	0.072		1
Naphthalene	ND	0.050	ND	0.262		1
Xylenes, Total	ND	0.060	ND	0.260		1
Tetrachloroethene	ND	0.020	ND	0.136		1
Toluene	ND	0.050	ND	0.188		1

Project Name: UNIFIRST PROPERTY IA / VI
Project Number: 1-2114-2

Lab Number: L1004721
Report Date: 04/10/10

SAMPLE RESULTS

Lab ID: L1004721-03
Client ID: CAN 1559 FC 074
Sample Location: WOBURN, MA

Date Collected: 04/02/10 00:00
Date Received: 04/03/10
Field Prep: Not Specified

Parameter	ppbV Results	ppbV RDL	ug/m3 Results	ug/m3 RDL	Qualifier	Dilution Factor
Volatile Organics in Air by SIM - Mansfield Lab						
trans-1,2-Dichloroethene	ND	0.020	ND	0.079		1
trans-1,3-Dichloropropene	ND	0.020	ND	0.091		1
Trichloroethene	ND	0.020	ND	0.107		1
Vinyl chloride	ND	0.020	ND	0.051		1
Isopropylbenzene	ND	0.500	ND	2.46		1

Project Name: UNIFIRST PROPERTY IA / VI
Project Number: 1-2114-2

Lab Number: L1004721
Report Date: 04/10/10

SAMPLE RESULTS

Lab ID: L1004721-04
Client ID: CAN 945 FC 256
Sample Location: WOBURN, MA
Matrix: Air
Anaytical Method: 48,TO-15-SIM
Analytical Date: 04/05/10 22:10
Analyst: AJ

Date Collected: 04/02/10 00:00
Date Received: 04/03/10
Field Prep: Not Specified

Parameter	ppbV Results	ppbV RDL	ug/m3 Results	ug/m3 RDL	Qualifier	Dilution Factor
Volatile Organics in Air by SIM - Mansfield Lab						
1,1,1-Trichloroethane	ND	0.020	ND	0.109		1
1,1,2-Trichloroethane	ND	0.020	ND	0.109		1
1,1-Dichloroethane	ND	0.020	ND	0.081		1
1,1-Dichloroethene	ND	0.020	ND	0.079		1
1,2,4-Trimethylbenzene	ND	0.020	ND	0.098		1
1,2-Dibromoethane	ND	0.020	ND	0.154		1
1,2-Dichloroethane	ND	0.020	ND	0.081		1
1,2-Dichloropropane	ND	0.020	ND	0.092		1
1,3-Butadiene	ND	0.020	ND	0.044		1
1,3-Dichlorobenzene	ND	0.020	ND	0.120		1
1,4-Dichlorobenzene	ND	0.020	ND	0.120		1
Benzene	ND	0.070	ND	0.223		1
Bromodichloromethane	ND	0.020	ND	0.134		1
Bromoform	ND	0.020	ND	0.206		1
Carbon tetrachloride	ND	0.020	ND	0.126		1
Chlorobenzene	ND	0.020	ND	0.092		1
Chloroform	ND	0.020	ND	0.098		1
cis-1,2-Dichloroethene	ND	0.020	ND	0.079		1
Ethylbenzene	ND	0.020	ND	0.087		1
Methylene chloride	ND	0.500	ND	1.74		1
Methyl tert butyl ether	ND	0.020	ND	0.072		1
Naphthalene	ND	0.050	ND	0.262		1
Xylenes, Total	ND	0.060	ND	0.260		1
Tetrachloroethene	ND	0.020	ND	0.136		1
Toluene	ND	0.050	ND	0.188		1

Project Name: UNIFIRST PROPERTY IA / VI
Project Number: 1-2114-2
Lab Number: L1004721
Report Date: 04/10/10

SAMPLE RESULTS

Lab ID: L1004721-04
Client ID: CAN 945 FC 256
Sample Location: WOBURN, MA
Date Collected: 04/02/10 00:00
Date Received: 04/03/10
Field Prep: Not Specified

Parameter	ppbV Results	ppbV RDL	ug/m3 Results	ug/m3 RDL	Qualifier	Dilution Factor
Volatile Organics in Air by SIM - Mansfield Lab						
trans-1,2-Dichloroethene	ND	0.020	ND	0.079		1
trans-1,3-Dichloropropene	ND	0.020	ND	0.091		1
Trichloroethene	ND	0.020	ND	0.107		1
Vinyl chloride	ND	0.020	ND	0.051		1
Isopropylbenzene	ND	0.500	ND	2.46		1

Project Name: UNIFIRST PROPERTY IA / VI
Project Number: 1-2114-2

Lab Number: L1004721
Report Date: 04/10/10

SAMPLE RESULTS

Lab ID: L1004721-05
Client ID: CAN 762 FC 233
Sample Location: WOBURN, MA
Matrix: Air
Anaytical Method: 48,TO-15-SIM
Analytical Date: 04/05/10 22:46
Analyst: AJ

Date Collected: 04/02/10 00:00
Date Received: 04/03/10
Field Prep: Not Specified

Parameter	ppbV Results	ppbV RDL	ug/m3 Results	ug/m3 RDL	Qualifier	Dilution Factor
Volatile Organics in Air by SIM - Mansfield Lab						
1,1,1-Trichloroethane	ND	0.020	ND	0.109		1
1,1,2-Trichloroethane	ND	0.020	ND	0.109		1
1,1-Dichloroethane	ND	0.020	ND	0.081		1
1,1-Dichloroethene	ND	0.020	ND	0.079		1
1,2,4-Trimethylbenzene	ND	0.020	ND	0.098		1
1,2-Dibromoethane	ND	0.020	ND	0.154		1
1,2-Dichloroethane	ND	0.020	ND	0.081		1
1,2-Dichloropropane	ND	0.020	ND	0.092		1
1,3-Butadiene	ND	0.020	ND	0.044		1
1,3-Dichlorobenzene	ND	0.020	ND	0.120		1
1,4-Dichlorobenzene	ND	0.020	ND	0.120		1
Benzene	ND	0.070	ND	0.223		1
Bromodichloromethane	ND	0.020	ND	0.134		1
Bromoform	ND	0.020	ND	0.206		1
Carbon tetrachloride	ND	0.020	ND	0.126		1
Chlorobenzene	ND	0.020	ND	0.092		1
Chloroform	ND	0.020	ND	0.098		1
cis-1,2-Dichloroethene	ND	0.020	ND	0.079		1
Ethylbenzene	ND	0.020	ND	0.087		1
Methylene chloride	ND	0.500	ND	1.74		1
Methyl tert butyl ether	ND	0.020	ND	0.072		1
Naphthalene	ND	0.050	ND	0.262		1
Xylenes, Total	ND	0.060	ND	0.260		1
Tetrachloroethene	ND	0.020	ND	0.136		1
Toluene	ND	0.050	ND	0.188		1

Project Name: UNIFIRST PROPERTY IA / VI
Project Number: 1-2114-2

Lab Number: L1004721
Report Date: 04/10/10

SAMPLE RESULTS

Lab ID: L1004721-05
Client ID: CAN 762 FC 233
Sample Location: WOBURN, MA

Date Collected: 04/02/10 00:00
Date Received: 04/03/10
Field Prep: Not Specified

Parameter	ppbV Results	ppbV RDL	ug/m3 Results	ug/m3 RDL	Qualifier	Dilution Factor
Volatile Organics in Air by SIM - Mansfield Lab						
trans-1,2-Dichloroethene	ND	0.020	ND	0.079		1
trans-1,3-Dichloropropene	ND	0.020	ND	0.091		1
Trichloroethene	ND	0.020	ND	0.107		1
Vinyl chloride	ND	0.020	ND	0.051		1
Isopropylbenzene	ND	0.500	ND	2.46		1

Project Name: UNIFIRST PROPERTY IA / VI
Project Number: 1-2114-2

Lab Number: L1004721
Report Date: 04/10/10

SAMPLE RESULTS

Lab ID: L1004721-06
Client ID: CAN 1707 FC 356
Sample Location: WOBURN, MA
Matrix: Air
Anaytical Method: 48,TO-15-SIM
Analytical Date: 04/05/10 23:21
Analyst: AJ

Date Collected: 04/02/10 00:00
Date Received: 04/03/10
Field Prep: Not Specified

Parameter	ppbV Results	ppbV RDL	ug/m3 Results	ug/m3 RDL	Qualifier	Dilution Factor
Volatile Organics in Air by SIM - Mansfield Lab						
1,1,1-Trichloroethane	ND	0.020	ND	0.109		1
1,1,2-Trichloroethane	ND	0.020	ND	0.109		1
1,1-Dichloroethane	ND	0.020	ND	0.081		1
1,1-Dichloroethene	ND	0.020	ND	0.079		1
1,2,4-Trimethylbenzene	ND	0.020	ND	0.098		1
1,2-Dibromoethane	ND	0.020	ND	0.154		1
1,2-Dichloroethane	ND	0.020	ND	0.081		1
1,2-Dichloropropane	ND	0.020	ND	0.092		1
1,3-Butadiene	ND	0.020	ND	0.044		1
1,3-Dichlorobenzene	ND	0.020	ND	0.120		1
1,4-Dichlorobenzene	ND	0.020	ND	0.120		1
Benzene	ND	0.070	ND	0.223		1
Bromodichloromethane	ND	0.020	ND	0.134		1
Bromoform	ND	0.020	ND	0.206		1
Carbon tetrachloride	ND	0.020	ND	0.126		1
Chlorobenzene	ND	0.020	ND	0.092		1
Chloroform	ND	0.020	ND	0.098		1
cis-1,2-Dichloroethene	ND	0.020	ND	0.079		1
Ethylbenzene	ND	0.020	ND	0.087		1
Methylene chloride	ND	0.500	ND	1.74		1
Methyl tert butyl ether	ND	0.020	ND	0.072		1
Naphthalene	ND	0.050	ND	0.262		1
Xylenes, Total	ND	0.060	ND	0.260		1
Tetrachloroethene	ND	0.020	ND	0.136		1
Toluene	ND	0.050	ND	0.188		1

Project Name: UNIFIRST PROPERTY IA / VI
Project Number: 1-2114-2

Lab Number: L1004721
Report Date: 04/10/10

SAMPLE RESULTS

Lab ID: L1004721-06
Client ID: CAN 1707 FC 356
Sample Location: WOBURN, MA

Date Collected: 04/02/10 00:00
Date Received: 04/03/10
Field Prep: Not Specified

Parameter	ppbV Results	ppbV RDL	ug/m3 Results	ug/m3 RDL	Qualifier	Dilution Factor
Volatile Organics in Air by SIM - Mansfield Lab						
trans-1,2-Dichloroethene	ND	0.020	ND	0.079		1
trans-1,3-Dichloropropene	ND	0.020	ND	0.091		1
Trichloroethene	ND	0.020	ND	0.107		1
Vinyl chloride	ND	0.020	ND	0.051		1
Isopropylbenzene	ND	0.500	ND	2.46		1

Project Name: UNIFIRST PROPERTY IA / VI
Project Number: 1-2114-2

Lab Number: L1004721
Report Date: 04/10/10

SAMPLE RESULTS

Lab ID: L1004721-07
Client ID: CAN 983 FC 349
Sample Location: WOBURN, MA
Matrix: Air
Anaytical Method: 48,TO-15-SIM
Analytical Date: 04/05/10 23:58
Analyst: AJ

Date Collected: 04/02/10 00:00
Date Received: 04/03/10
Field Prep: Not Specified

Parameter	ppbV Results	ppbV RDL	ug/m3 Results	ug/m3 RDL	Qualifier	Dilution Factor
Volatile Organics in Air by SIM - Mansfield Lab						
1,1,1-Trichloroethane	ND	0.020	ND	0.109		1
1,1,2-Trichloroethane	ND	0.020	ND	0.109		1
1,1-Dichloroethane	ND	0.020	ND	0.081		1
1,1-Dichloroethene	ND	0.020	ND	0.079		1
1,2,4-Trimethylbenzene	ND	0.020	ND	0.098		1
1,2-Dibromoethane	ND	0.020	ND	0.154		1
1,2-Dichloroethane	ND	0.020	ND	0.081		1
1,2-Dichloropropane	ND	0.020	ND	0.092		1
1,3-Butadiene	ND	0.020	ND	0.044		1
1,3-Dichlorobenzene	ND	0.020	ND	0.120		1
1,4-Dichlorobenzene	ND	0.020	ND	0.120		1
Benzene	ND	0.070	ND	0.223		1
Bromodichloromethane	ND	0.020	ND	0.134		1
Bromoform	ND	0.020	ND	0.206		1
Carbon tetrachloride	ND	0.020	ND	0.126		1
Chlorobenzene	ND	0.020	ND	0.092		1
Chloroform	ND	0.020	ND	0.098		1
cis-1,2-Dichloroethene	ND	0.020	ND	0.079		1
Ethylbenzene	ND	0.020	ND	0.087		1
Methylene chloride	ND	0.500	ND	1.74		1
Methyl tert butyl ether	ND	0.020	ND	0.072		1
Naphthalene	ND	0.050	ND	0.262		1
Xylenes, Total	ND	0.060	ND	0.260		1
Tetrachloroethene	ND	0.020	ND	0.136		1
Toluene	ND	0.050	ND	0.188		1

Project Name: UNIFIRST PROPERTY IA / VI
Project Number: 1-2114-2

Lab Number: L1004721
Report Date: 04/10/10

SAMPLE RESULTS

Lab ID: L1004721-07
Client ID: CAN 983 FC 349
Sample Location: WOBURN, MA

Date Collected: 04/02/10 00:00
Date Received: 04/03/10
Field Prep: Not Specified

Parameter	ppbV Results	ppbV RDL	ug/m3 Results	ug/m3 RDL	Qualifier	Dilution Factor
Volatile Organics in Air by SIM - Mansfield Lab						
trans-1,2-Dichloroethene	ND	0.020	ND	0.079		1
trans-1,3-Dichloropropene	ND	0.020	ND	0.091		1
Trichloroethene	ND	0.020	ND	0.107		1
Vinyl chloride	ND	0.020	ND	0.051		1
Isopropylbenzene	ND	0.500	ND	2.46		1

Project Name: UNIFIRST PROPERTY IA / VI
Project Number: 1-2114-2

Lab Number: L1004721
Report Date: 04/10/10

SAMPLE RESULTS

Lab ID: L1004721-08
Client ID: CAN 618 FC 047
Sample Location: WOBURN, MA
Matrix: Air
Anaytical Method: 48,TO-15-SIM
Analytical Date: 04/06/10 00:34
Analyst: AJ

Date Collected: 04/02/10 00:00
Date Received: 04/03/10
Field Prep: Not Specified

Parameter	ppbV Results	ppbV RDL	ug/m3 Results	ug/m3 RDL	Qualifier	Dilution Factor
Volatile Organics in Air by SIM - Mansfield Lab						
1,1,1-Trichloroethane	ND	0.020	ND	0.109		1
1,1,2-Trichloroethane	ND	0.020	ND	0.109		1
1,1-Dichloroethane	ND	0.020	ND	0.081		1
1,1-Dichloroethene	ND	0.020	ND	0.079		1
1,2,4-Trimethylbenzene	ND	0.020	ND	0.098		1
1,2-Dibromoethane	ND	0.020	ND	0.154		1
1,2-Dichloroethane	ND	0.020	ND	0.081		1
1,2-Dichloropropane	ND	0.020	ND	0.092		1
1,3-Butadiene	ND	0.020	ND	0.044		1
1,3-Dichlorobenzene	ND	0.020	ND	0.120		1
1,4-Dichlorobenzene	ND	0.020	ND	0.120		1
Benzene	ND	0.070	ND	0.223		1
Bromodichloromethane	ND	0.020	ND	0.134		1
Bromoform	ND	0.020	ND	0.206		1
Carbon tetrachloride	ND	0.020	ND	0.126		1
Chlorobenzene	ND	0.020	ND	0.092		1
Chloroform	ND	0.020	ND	0.098		1
cis-1,2-Dichloroethene	ND	0.020	ND	0.079		1
Ethylbenzene	ND	0.020	ND	0.087		1
Methylene chloride	ND	0.500	ND	1.74		1
Methyl tert butyl ether	ND	0.020	ND	0.072		1
Naphthalene	ND	0.050	ND	0.262		1
Xylenes, Total	ND	0.060	ND	0.260		1
Tetrachloroethene	ND	0.020	ND	0.136		1
Toluene	ND	0.050	ND	0.188		1

Project Name: UNIFIRST PROPERTY IA / VI
Project Number: 1-2114-2

Lab Number: L1004721
Report Date: 04/10/10

SAMPLE RESULTS

Lab ID: L1004721-08
Client ID: CAN 618 FC 047
Sample Location: WOBURN, MA

Date Collected: 04/02/10 00:00
Date Received: 04/03/10
Field Prep: Not Specified

Parameter	ppbV Results	ppbV RDL	ug/m3 Results	ug/m3 RDL	Qualifier	Dilution Factor
Volatile Organics in Air by SIM - Mansfield Lab						
trans-1,2-Dichloroethene	ND	0.020	ND	0.079		1
trans-1,3-Dichloropropene	ND	0.020	ND	0.091		1
Trichloroethene	ND	0.020	ND	0.107		1
Vinyl chloride	ND	0.020	ND	0.051		1
Isopropylbenzene	ND	0.500	ND	2.46		1

Project Name: UNIFIRST PROPERTY IA / VI
Project Number: 1-2114-2

Lab Number: L1004721
Report Date: 04/10/10

SAMPLE RESULTS

Lab ID: L1004721-09
Client ID: CAN 1667 FC 379
Sample Location: WOBURN, MA
Matrix: Air
Anaytical Method: 48,TO-15-SIM
Analytical Date: 04/06/10 01:10
Analyst: AJ

Date Collected: 04/02/10 00:00
Date Received: 04/03/10
Field Prep: Not Specified

Parameter	ppbV Results	ppbV RDL	ug/m3 Results	ug/m3 RDL	Qualifier	Dilution Factor
Volatile Organics in Air by SIM - Mansfield Lab						
1,1,1-Trichloroethane	ND	0.020	ND	0.109		1
1,1,2-Trichloroethane	ND	0.020	ND	0.109		1
1,1-Dichloroethane	ND	0.020	ND	0.081		1
1,1-Dichloroethene	ND	0.020	ND	0.079		1
1,2,4-Trimethylbenzene	ND	0.020	ND	0.098		1
1,2-Dibromoethane	ND	0.020	ND	0.154		1
1,2-Dichloroethane	ND	0.020	ND	0.081		1
1,2-Dichloropropane	ND	0.020	ND	0.092		1
1,3-Butadiene	ND	0.020	ND	0.044		1
1,3-Dichlorobenzene	ND	0.020	ND	0.120		1
1,4-Dichlorobenzene	ND	0.020	ND	0.120		1
Benzene	ND	0.070	ND	0.223		1
Bromodichloromethane	ND	0.020	ND	0.134		1
Bromoform	ND	0.020	ND	0.206		1
Carbon tetrachloride	ND	0.020	ND	0.126		1
Chlorobenzene	ND	0.020	ND	0.092		1
Chloroform	ND	0.020	ND	0.098		1
cis-1,2-Dichloroethene	ND	0.020	ND	0.079		1
Ethylbenzene	ND	0.020	ND	0.087		1
Methylene chloride	ND	0.500	ND	1.74		1
Methyl tert butyl ether	ND	0.020	ND	0.072		1
Naphthalene	ND	0.050	ND	0.262		1
Xylenes, Total	ND	0.060	ND	0.260		1
Tetrachloroethene	ND	0.020	ND	0.136		1
Toluene	ND	0.050	ND	0.188		1

Project Name: UNIFIRST PROPERTY IA / VI
Project Number: 1-2114-2

Lab Number: L1004721
Report Date: 04/10/10

SAMPLE RESULTS

Lab ID: L1004721-09
Client ID: CAN 1667 FC 379
Sample Location: WOBURN, MA

Date Collected: 04/02/10 00:00
Date Received: 04/03/10
Field Prep: Not Specified

Parameter	ppbV Results	ppbV RDL	ug/m3 Results	ug/m3 RDL	Qualifier	Dilution Factor
Volatile Organics in Air by SIM - Mansfield Lab						
trans-1,2-Dichloroethene	ND	0.020	ND	0.079		1
trans-1,3-Dichloropropene	ND	0.020	ND	0.091		1
Trichloroethene	ND	0.020	ND	0.107		1
Vinyl chloride	ND	0.020	ND	0.051		1
Isopropylbenzene	ND	0.500	ND	2.46		1

Project Name: UNIFIRST PROPERTY IA / VI
Project Number: 1-2114-2

Lab Number: L1004721
Report Date: 04/10/10

SAMPLE RESULTS

Lab ID: L1004721-10
Client ID: CAN 584 FC 081
Sample Location: WOBURN, MA
Matrix: Air
Anaytical Method: 48,TO-15-SIM
Analytical Date: 04/06/10 01:44
Analyst: AJ

Date Collected: 04/02/10 00:00
Date Received: 04/03/10
Field Prep: Not Specified

Parameter	ppbV Results	ppbV RDL	ug/m3 Results	ug/m3 RDL	Qualifier	Dilution Factor
Volatile Organics in Air by SIM - Mansfield Lab						
1,1,1-Trichloroethane	ND	0.020	ND	0.109		1
1,1,2-Trichloroethane	ND	0.020	ND	0.109		1
1,1-Dichloroethane	ND	0.020	ND	0.081		1
1,1-Dichloroethene	ND	0.020	ND	0.079		1
1,2,4-Trimethylbenzene	ND	0.020	ND	0.098		1
1,2-Dibromoethane	ND	0.020	ND	0.154		1
1,2-Dichloroethane	ND	0.020	ND	0.081		1
1,2-Dichloropropane	ND	0.020	ND	0.092		1
1,3-Butadiene	ND	0.020	ND	0.044		1
1,3-Dichlorobenzene	ND	0.020	ND	0.120		1
1,4-Dichlorobenzene	ND	0.020	ND	0.120		1
Benzene	ND	0.070	ND	0.223		1
Bromodichloromethane	ND	0.020	ND	0.134		1
Bromoform	ND	0.020	ND	0.206		1
Carbon tetrachloride	ND	0.020	ND	0.126		1
Chlorobenzene	ND	0.020	ND	0.092		1
Chloroform	ND	0.020	ND	0.098		1
cis-1,2-Dichloroethene	ND	0.020	ND	0.079		1
Ethylbenzene	ND	0.020	ND	0.087		1
Methylene chloride	ND	0.500	ND	1.74		1
Methyl tert butyl ether	ND	0.020	ND	0.072		1
Naphthalene	ND	0.050	ND	0.262		1
Xylenes, Total	ND	0.060	ND	0.260		1
Tetrachloroethene	ND	0.020	ND	0.136		1
Toluene	ND	0.050	ND	0.188		1

Project Name: UNIFIRST PROPERTY IA / VI
Project Number: 1-2114-2

Lab Number: L1004721
Report Date: 04/10/10

SAMPLE RESULTS

Lab ID: L1004721-10
Client ID: CAN 584 FC 081
Sample Location: WOBURN, MA

Date Collected: 04/02/10 00:00
Date Received: 04/03/10
Field Prep: Not Specified

Parameter	ppbV Results	ppbV RDL	ug/m3 Results	ug/m3 RDL	Qualifier	Dilution Factor
Volatile Organics in Air by SIM - Mansfield Lab						
trans-1,2-Dichloroethene	ND	0.020	ND	0.079		1
trans-1,3-Dichloropropene	ND	0.020	ND	0.091		1
Trichloroethene	ND	0.020	ND	0.107		1
Vinyl chloride	ND	0.020	ND	0.051		1
Isopropylbenzene	ND	0.500	ND	2.46		1

Project Name: UNIFIRST PROPERTY IA / VI
Project Number: 1-2114-2

Lab Number: L1004721
Report Date: 04/10/10

SAMPLE RESULTS

Lab ID: L1004721-11
Client ID: CAN 1036 FC 333
Sample Location: WOBURN, MA
Matrix: Air
Anaytical Method: 48,TO-15-SIM
Analytical Date: 04/06/10 02:19
Analyst: AJ

Date Collected: 04/02/10 00:00
Date Received: 04/03/10
Field Prep: Not Specified

Parameter	ppbV Results	ppbV RDL	ug/m3 Results	ug/m3 RDL	Qualifier	Dilution Factor
Volatile Organics in Air by SIM - Mansfield Lab						
1,1,1-Trichloroethane	ND	0.020	ND	0.109		1
1,1,2-Trichloroethane	ND	0.020	ND	0.109		1
1,1-Dichloroethane	ND	0.020	ND	0.081		1
1,1-Dichloroethene	ND	0.020	ND	0.079		1
1,2,4-Trimethylbenzene	ND	0.020	ND	0.098		1
1,2-Dibromoethane	ND	0.020	ND	0.154		1
1,2-Dichloroethane	ND	0.020	ND	0.081		1
1,2-Dichloropropane	ND	0.020	ND	0.092		1
1,3-Buladiene	ND	0.020	ND	0.044		1
1,3-Dichlorobenzene	ND	0.020	ND	0.120		1
1,4-Dichlorobenzene	ND	0.020	ND	0.120		1
Benzene	ND	0.070	ND	0.223		1
Bromodichloromethane	ND	0.020	ND	0.134		1
Bromoform	ND	0.020	ND	0.206		1
Carbon tetrachloride	ND	0.020	ND	0.126		1
Chlorobenzene	ND	0.020	ND	0.092		1
Chloroform	ND	0.020	ND	0.098		1
cis-1,2-Dichloroethene	ND	0.020	ND	0.079		1
Ethylbenzene	ND	0.020	ND	0.087		1
Methylene chloride	ND	0.500	ND	1.74		1
Methyl tert butyl ether	ND	0.020	ND	0.072		1
Naphthalene	ND	0.050	ND	0.262		1
Xylenes, Total	ND	0.060	ND	0.260		1
Tetrachloroethene	ND	0.020	ND	0.136		1
Toluene	ND	0.050	ND	0.188		1

Project Name: UNIFIRST PROPERTY IA / VI
Project Number: 1-2114-2

Lab Number: L1004721
Report Date: 04/10/10

SAMPLE RESULTS

Lab ID: L1004721-11
Client ID: CAN 1036 FC 333
Sample Location: WOBURN, MA

Date Collected: 04/02/10 00:00
Date Received: 04/03/10
Field Prep: Not Specified

Parameter	ppbV Results	ppbV RDL	ug/m3 Results	ug/m3 RDL	Qualifier	Dilution Factor
Volatile Organics in Air by SIM - Mansfield Lab						
trans-1,2-Dichloroethene	ND	0.020	ND	0.079		1
trans-1,3-Dichloropropene	ND	0.020	ND	0.091		1
Trichloroethene	ND	0.020	ND	0.107		1
Vinyl chloride	ND	0.020	ND	0.051		1
Isopropylbenzene	ND	0.500	ND	2.46		1

Project Name: UNIFIRST PROPERTY IA / VI
Project Number: 1-2114-2

Lab Number: L1004721
Report Date: 04/10/10

SAMPLE RESULTS

Lab ID: L1004721-12
Client ID: CAN 782 FC 175
Sample Location: WOBURN, MA
Matrix: Air
Anaytical Method: 48,TO-15-SIM
Analytical Date: 04/06/10 02:53
Analyst: AJ

Date Collected: 04/02/10 00:00
Date Received: 04/03/10
Field Prep: Not Specified

Parameter	ppbV Results	ppbV RDL	ug/m3 Results	ug/m3 RDL	Qualifier	Dilution Factor
Volatile Organics in Air by SIM - Mansfield Lab						
1,1,1-Trichloroethane	ND	0.020	ND	0.109		1
1,1,2-Trichloroethane	ND	0.020	ND	0.109		1
1,1-Dichloroethane	ND	0.020	ND	0.081		1
1,1-Dichloroethene	ND	0.020	ND	0.079		1
1,2,4-Trimethylbenzene	ND	0.020	ND	0.098		1
1,2-Dibromoethane	ND	0.020	ND	0.154		1
1,2-Dichloroethane	ND	0.020	ND	0.081		1
1,2-Dichloropropane	ND	0.020	ND	0.092		1
1,3-Butadiene	ND	0.020	ND	0.044		1
1,3-Dichlorobenzene	ND	0.020	ND	0.120		1
1,4-Dichlorobenzene	ND	0.020	ND	0.120		1
Benzene	ND	0.070	ND	0.223		1
Bromodichloromethane	ND	0.020	ND	0.134		1
Bromoform	ND	0.020	ND	0.206		1
Carbon tetrachloride	ND	0.020	ND	0.126		1
Chlorobenzene	ND	0.020	ND	0.092		1
Chloroform	ND	0.020	ND	0.098		1
cis-1,2-Dichloroethene	ND	0.020	ND	0.079		1
Ethylbenzene	ND	0.020	ND	0.087		1
Methylene chloride	ND	0.500	ND	1.74		1
Methyl tert butyl ether	ND	0.020	ND	0.072		1
Naphthalene	ND	0.050	ND	0.262		1
Xylenes, Total	ND	0.060	ND	0.260		1
Tetrachloroethene	ND	0.020	ND	0.136		1
Toluene	ND	0.050	ND	0.188		1

Project Name: UNIFIRST PROPERTY IA / VI
Project Number: 1-2114-2

Lab Number: L1004721
Report Date: 04/10/10

SAMPLE RESULTS

Lab ID: L1004721-12
Client ID: CAN 782 FC 175
Sample Location: WOBURN, MA

Date Collected: 04/02/10 00:00
Date Received: 04/03/10
Field Prep: Not Specified

Parameter	ppbV Results	ppbV RDL	ug/m3 Results	ug/m3 RDL	Qualifier	Dilution Factor
Volatile Organics in Air by SIM - Mansfield Lab						
trans-1,2-Dichloroethene	ND	0.020	ND	0.079		1
trans-1,3-Dichloropropene	ND	0.020	ND	0.091		1
Trichloroethene	ND	0.020	ND	0.107		1
Vinyl chloride	ND	0.020	ND	0.051		1
Isopropylbenzene	ND	0.500	ND	2.46		1

Project Name: UNIFIRST PROPERTY IA / VI
Project Number: 1-2114-2

Lab Number: L1004721
Report Date: 04/10/10

SAMPLE RESULTS

Lab ID: L1004721-13
Client ID: CAN 1628 FC 360
Sample Location: WOBURN, MA
Matrix: Air
Anaytical Method: 48,TO-15-SIM
Analytical Date: 04/06/10 03:27
Analyst: AJ

Date Collected: 04/02/10 00:00
Date Received: 04/03/10
Field Prep: Not Specified

Parameter	ppbV Results	ppbV RDL	ug/m3 Results	ug/m3 RDL	Qualifier	Dilution Factor
Volatile Organics in Air by SIM - Mansfield Lab						
1,1,1-Trichloroethane	ND	0.020	ND	0.109		1
1,1,2-Trichloroethane	ND	0.020	ND	0.109		1
1,1-Dichloroethane	ND	0.020	ND	0.081		1
1,1-Dichloroethene	ND	0.020	ND	0.079		1
1,2,4-Trimethylbenzene	ND	0.020	ND	0.098		1
1,2-Dibromoethane	ND	0.020	ND	0.154		1
1,2-Dichloroethane	ND	0.020	ND	0.081		1
1,2-Dichloropropane	ND	0.020	ND	0.092		1
1,3-Butadiene	ND	0.020	ND	0.044		1
1,3-Dichlorobenzene	ND	0.020	ND	0.120		1
1,4-Dichlorobenzene	ND	0.020	ND	0.120		1
Benzene	ND	0.070	ND	0.223		1
Bromodichloromethane	ND	0.020	ND	0.134		1
Bromoform	ND	0.020	ND	0.206		1
Carbon tetrachloride	ND	0.020	ND	0.126		1
Chlorobenzene	ND	0.020	ND	0.092		1
Chloroform	ND	0.020	ND	0.098		1
cis-1,2-Dichloroethene	ND	0.020	ND	0.079		1
Ethylbenzene	ND	0.020	ND	0.087		1
Methylene chloride	ND	0.500	ND	1.74		1
Methyl tert butyl ether	ND	0.020	ND	0.072		1
Naphthalene	ND	0.050	ND	0.262		1
Xylenes, Total	ND	0.060	ND	0.260		1
Tetrachloroethene	ND	0.020	ND	0.136		1
Toluene	ND	0.050	ND	0.188		1

Project Name: UNIFIRST PROPERTY IA / VI
Project Number: 1-2114-2

Lab Number: L1004721
Report Date: 04/10/10

SAMPLE RESULTS

Lab ID: L1004721-13
Client ID: CAN 1628 FC 360
Sample Location: WOBURN, MA

Date Collected: 04/02/10 00:00
Date Received: 04/03/10
Field Prep: Not Specified

Parameter	ppbV Results	ppbV RDL	ug/m3 Results	ug/m3 RDL	Qualifier	Dilution Factor
Volatile Organics in Air by SIM - Mansfield Lab						
trans-1,2-Dichloroethene	ND	0.020	ND	0.079		1
trans-1,3-Dichloropropene	ND	0.020	ND	0.091		1
Trichloroethene	ND	0.020	ND	0.107		1
Vinyl chloride	ND	0.020	ND	0.051		1
Isopropylbenzene	ND	0.500	ND	2.46		1

Project Name: UNIFIRST PROPERTY IA / VI
Project Number: 1-2114-2

Lab Number: L1004721
Report Date: 04/10/10

SAMPLE RESULTS

Lab ID: L1004721-14
Client ID: CAN 972 FC 277
Sample Location: WOBURN, MA
Matrix: Air
Anaytical Method: 48,TO-15-SIM
Analytical Date: 04/06/10 17:18
Analyst: AJ

Date Collected: 04/02/10 00:00
Date Received: 04/03/10
Field Prep: Not Specified

Parameter	ppbV Results	ppbV RDL	ug/m3 Results	ug/m3 RDL	Qualifier	Dilution Factor
Volatile Organics in Air by SIM - Mansfield Lab						
1,1,1-Trichloroethane	ND	0.020	ND	0.109		1
1,1,2-Trichloroethane	ND	0.020	ND	0.109		1
1,1-Dichloroethane	ND	0.020	ND	0.081		1
1,1-Dichloroethene	ND	0.020	ND	0.079		1
1,2,4-Trimethylbenzene	ND	0.020	ND	0.098		1
1,2-Dibromoethane	ND	0.020	ND	0.154		1
1,2-Dichloroethane	ND	0.020	ND	0.081		1
1,2-Dichloropropane	ND	0.020	ND	0.092		1
1,3-Butadiene	ND	0.020	ND	0.044		1
1,3-Dichlorobenzene	ND	0.020	ND	0.120		1
1,4-Dichlorobenzene	ND	0.020	ND	0.120		1
Benzene	ND	0.070	ND	0.223		1
Bromodichloromethane	ND	0.020	ND	0.134		1
Bromoform	ND	0.020	ND	0.206		1
Carbon tetrachloride	ND	0.020	ND	0.126		1
Chlorobenzene	ND	0.020	ND	0.092		1
Chloroform	ND	0.020	ND	0.098		1
cis-1,2-Dichloroethene	ND	0.020	ND	0.079		1
Ethylbenzene	ND	0.020	ND	0.087		1
Methylene chloride	ND	0.500	ND	1.74		1
Methyl tert butyl ether	ND	0.020	ND	0.072		1
Naphthalene	ND	0.050	ND	0.262		1
Xylenes, Total	ND	0.060	ND	0.260		1
Tetrachloroethene	ND	0.020	ND	0.136		1
Toluene	ND	0.050	ND	0.188		1

Project Name: UNIFIRST PROPERTY IA / VI
Project Number: 1-2114-2

Lab Number: L1004721
Report Date: 04/10/10

SAMPLE RESULTS

Lab ID: L1004721-14
Client ID: CAN 972 FC 277
Sample Location: WOBURN, MA

Date Collected: 04/02/10 00:00
Date Received: 04/03/10
Field Prep: Not Specified

Parameter	ppbV Results	ppbV RDL	ug/m3 Results	ug/m3 RDL	Qualifier	Dilution Factor
Volatile Organics in Air by SIM - Mansfield Lab						
trans-1,2-Dichloroethene	ND	0.020	ND	0.079		1
trans-1,3-Dichloropropene	ND	0.020	ND	0.091		1
Trichloroethene	ND	0.020	ND	0.107		1
Vinyl chloride	ND	0.020	ND	0.051		1
Isopropylbenzene	ND	0.500	ND	2.46		1

Project Name: UNIFIRST PROPERTY IA / VI
Project Number: 1-2114-2

Lab Number: L1004721
Report Date: 04/10/10

SAMPLE RESULTS

Lab ID: L1004721-15
Client ID: CAN 1690 FC 028
Sample Location: WOBURN, MA
Matrix: Air
Anaytical Method: 48,TO-15-SIM
Analytical Date: 04/06/10 17:53
Analyst: AJ

Date Collected: 04/02/10 00:00
Date Received: 04/03/10
Field Prep: Not Specified

Parameter	ppbV Results	ppbV RDL	ug/m3 Results	ug/m3 RDL	Qualifier	Dilution Factor
Volatile Organics in Air by SIM - Mansfield Lab						
1,1,1-Trichloroethane	ND	0.020	ND	0.109		1
1,1,2-Trichloroethane	ND	0.020	ND	0.109		1
1,1-Dichloroethane	ND	0.020	ND	0.081		1
1,1-Dichloroethene	ND	0.020	ND	0.079		1
1,2,4-Trimethylbenzene	ND	0.020	ND	0.098		1
1,2-Dibromoethane	ND	0.020	ND	0.154		1
1,2-Dichloroethane	ND	0.020	ND	0.081		1
1,2-Dichloropropane	ND	0.020	ND	0.092		1
1,3-Butadiene	ND	0.020	ND	0.044		1
1,3-Dichlorobenzene	ND	0.020	ND	0.120		1
1,4-Dichlorobenzene	ND	0.020	ND	0.120		1
Benzene	ND	0.070	ND	0.223		1
Bromodichloromethane	ND	0.020	ND	0.134		1
Bromoform	ND	0.020	ND	0.206		1
Carbon tetrachloride	ND	0.020	ND	0.126		1
Chlorobenzene	ND	0.020	ND	0.092		1
Chloroform	ND	0.020	ND	0.098		1
cis-1,2-Dichloroethene	ND	0.020	ND	0.079		1
Ethylbenzene	ND	0.020	ND	0.087		1
Methylene chloride	ND	0.500	ND	1.74		1
Methyl tert butyl ether	ND	0.020	ND	0.072		1
Naphthalene	ND	0.050	ND	0.262		1
Xylenes, Total	ND	0.060	ND	0.260		1
Tetrachloroethene	ND	0.020	ND	0.136		1
Toluene	ND	0.050	ND	0.188		1

Project Name: UNIFIRST PROPERTY IA / VI
Project Number: 1-2114-2

Lab Number: L1004721
Report Date: 04/10/10

SAMPLE RESULTS

Lab ID: L1004721-15
Client ID: CAN 1690 FC 028
Sample Location: WOBURN, MA

Date Collected: 04/02/10 00:00
Date Received: 04/03/10
Field Prep: Not Specified

Parameter	ppbV Results	ppbV RDL	ug/m3 Results	ug/m3 RDL	Qualifier	Dilution Factor
Volatile Organics in Air by SIM - Mansfield Lab						
trans-1,2-Dichloroethene	ND	0.020	ND	0.079		1
trans-1,3-Dichloropropene	ND	0.020	ND	0.091		1
Trichloroethene	ND	0.020	ND	0.107		1
Vinyl chloride	ND	0.020	ND	0.051		1
Isopropylbenzene	ND	0.500	ND	2.46		1

Project Name: UNIFIRST PROPERTY IA / VI
Project Number: 1-2114-2

Lab Number: L1004721
Report Date: 04/10/10

SAMPLE RESULTS

Lab ID: L1004721-16
Client ID: CAN 1614 FC 309
Sample Location: WOBURN, MA
Matrix: Air
Anaytical Method: 48,TO-15-SIM
Analytical Date: 04/06/10 18:28
Analyst: AJ

Date Collected: 04/02/10 00:00
Date Received: 04/03/10
Field Prep: Not Specified

Parameter	ppbV Results	ppbV RDL	ug/m3 Results	ug/m3 RDL	Qualifier	Dilution Factor
Volatile Organics in Air by SIM - Mansfield Lab						
1,1,1-Trichloroethane	ND	0.020	ND	0.109		1
1,1,2-Trichloroethane	ND	0.020	ND	0.109		1
1,1-Dichloroethane	ND	0.020	ND	0.081		1
1,1-Dichloroethene	ND	0.020	ND	0.079		1
1,2,4-Trimethylbenzene	ND	0.020	ND	0.098		1
1,2-Dibromoethane	ND	0.020	ND	0.154		1
1,2-Dichloroethane	ND	0.020	ND	0.081		1
1,2-Dichloropropane	ND	0.020	ND	0.092		1
1,3-Buladiene	ND	0.020	ND	0.044		1
1,3-Dichlorobenzene	ND	0.020	ND	0.120		1
1,4-Dichlorobenzene	ND	0.020	ND	0.120		1
Benzene	ND	0.070	ND	0.223		1
Bromodichloromethane	ND	0.020	ND	0.134		1
Bromoform	ND	0.020	ND	0.206		1
Carbon tetrachloride	ND	0.020	ND	0.126		1
Chlorobenzene	ND	0.020	ND	0.092		1
Chloroform	ND	0.020	ND	0.098		1
cis-1,2-Dichloroethene	ND	0.020	ND	0.079		1
Ethylbenzene	ND	0.020	ND	0.087		1
Methylene chloride	ND	0.500	ND	1.74		1
Methyl tert butyl ether	ND	0.020	ND	0.072		1
Naphthalene	ND	0.050	ND	0.262		1
Xylenes, Total	ND	0.060	ND	0.260		1
Tetrachloroethene	ND	0.020	ND	0.136		1
Toluene	ND	0.050	ND	0.188		1

Project Name: UNIFIRST PROPERTY IA / VI
Project Number: 1-2114-2

Lab Number: L1004721
Report Date: 04/10/10

SAMPLE RESULTS

Lab ID: L1004721-16
Client ID: CAN 1614 FC 309
Sample Location: WOBURN, MA

Date Collected: 04/02/10 00:00
Date Received: 04/03/10
Field Prep: Not Specified

Parameter	ppbV Results	ppbV RDL	ug/m3 Results	ug/m3 RDL	Qualifier	Dilution Factor
Volatile Organics in Air by SIM - Mansfield Lab						
trans-1,2-Dichloroethene	ND	0.020	ND	0.079		1
trans-1,3-Dichloropropene	ND	0.020	ND	0.091		1
Trichloroethene	ND	0.020	ND	0.107		1
Vinyl chloride	ND	0.020	ND	0.051		1
Isopropylbenzene	ND	0.500	ND	2.46		1

Project Name: UNIFIRST PROPERTY IA / VI
Project Number: 1-2114-2

Lab Number: L1004721
Report Date: 04/10/10

SAMPLE RESULTS

Lab ID: L1004721-17
Client ID: CAN 639 FC 231
Sample Location: WOBURN, MA
Matrix: Air
Anaytical Method: 48,TO-15-SIM
Analytical Date: 04/06/10 19:03
Analyst: AJ

Date Collected: 04/02/10 00:00
Date Received: 04/03/10
Field Prep: Not Specified

Parameter	ppbV Results	ppbV RDL	ug/m3 Results	ug/m3 RDL	Qualifier	Dilution Factor
Volatile Organics in Air by SIM - Mansfield Lab						
1,1,1-Trichloroethane	ND	0.020	ND	0.109		1
1,1,2-Trichloroethane	ND	0.020	ND	0.109		1
1,1-Dichloroethane	ND	0.020	ND	0.081		1
1,1-Dichloroethene	ND	0.020	ND	0.079		1
1,2,4-Trimethylbenzene	ND	0.020	ND	0.098		1
1,2-Dibromoethane	ND	0.020	ND	0.154		1
1,2-Dichloroethane	ND	0.020	ND	0.081		1
1,2-Dichloropropane	ND	0.020	ND	0.092		1
1,3-Butadiene	ND	0.020	ND	0.044		1
1,3-Dichlorobenzene	ND	0.020	ND	0.120		1
1,4-Dichlorobenzene	ND	0.020	ND	0.120		1
Benzene	ND	0.070	ND	0.223		1
Bromodichloromethane	ND	0.020	ND	0.134		1
Bromoform	ND	0.020	ND	0.206		1
Carbon tetrachloride	ND	0.020	ND	0.126		1
Chlorobenzene	ND	0.020	ND	0.092		1
Chloroform	ND	0.020	ND	0.098		1
cis-1,2-Dichloroethene	ND	0.020	ND	0.079		1
Ethylbenzene	ND	0.020	ND	0.087		1
Methylene chloride	ND	0.500	ND	1.74		1
Methyl tert butyl ether	ND	0.020	ND	0.072		1
Naphthalene	ND	0.050	ND	0.262		1
Xylenes, Total	ND	0.060	ND	0.260		1
Tetrachloroethene	ND	0.020	ND	0.136		1
Toluene	ND	0.050	ND	0.188		1

Project Name: UNIFIRST PROPERTY IA / VI
Project Number: 1-2114-2
Lab Number: L1004721
Report Date: 04/10/10

SAMPLE RESULTS

Lab ID: L1004721-17
Client ID: CAN 639 FC 231
Sample Location: WOBURN, MA
Date Collected: 04/02/10 00:00
Date Received: 04/03/10
Field Prep: Not Specified

Parameter	ppbV Results	ppbV RDL	ug/m3 Results	ug/m3 RDL	Qualifier	Dilution Factor
Volatile Organics in Air by SIM - Mansfield Lab						
trans-1,2-Dichloroethene	ND	0.020	ND	0.079		1
trans-1,3-Dichloropropene	ND	0.020	ND	0.091		1
Trichloroethene	ND	0.020	ND	0.107		1
Vinyl chloride	ND	0.020	ND	0.051		1
Isopropylbenzene	ND	0.500	ND	2.46		1

Project Name: UNIFIRST PROPERTY IA / VI
Project Number: 1-2114-2

Lab Number: L1004721
Report Date: 04/10/10

SAMPLE RESULTS

Lab ID: L1004721-18
Client ID: CAN 1566 FC 262
Sample Location: WOBURN, MA
Matrix: Air
Anaytical Method: 48,TO-15-SIM
Analytical Date: 04/06/10 19:38
Analyst: AJ

Date Collected: 04/02/10 00:00
Date Received: 04/03/10
Field Prep: Not Specified

Parameter	ppbV Results	ppbV RDL	ug/m3 Results	ug/m3 RDL	Qualifier	Dilution Factor
Volatile Organics in Air by SIM - Mansfield Lab						
1,1,1-Trichloroethane	ND	0.020	ND	0.109		1
1,1,2-Trichloroethane	ND	0.020	ND	0.109		1
1,1-Dichloroethane	ND	0.020	ND	0.081		1
1,1-Dichloroethene	ND	0.020	ND	0.079		1
1,2,4-Trimethylbenzene	ND	0.020	ND	0.098		1
1,2-Dibromoethane	ND	0.020	ND	0.154		1
1,2-Dichloroethane	ND	0.020	ND	0.081		1
1,2-Dichloropropane	ND	0.020	ND	0.092		1
1,3-Butadiene	ND	0.020	ND	0.044		1
1,3-Dichlorobenzene	ND	0.020	ND	0.120		1
1,4-Dichlorobenzene	ND	0.020	ND	0.120		1
Benzene	ND	0.070	ND	0.223		1
Bromodichloromethane	ND	0.020	ND	0.134		1
Bromoform	ND	0.020	ND	0.206		1
Carbon tetrachloride	ND	0.020	ND	0.126		1
Chlorobenzene	ND	0.020	ND	0.092		1
Chloroform	ND	0.020	ND	0.098		1
cis-1,2-Dichloroethene	ND	0.020	ND	0.079		1
Ethylbenzene	ND	0.020	ND	0.087		1
Methylene chloride	ND	0.500	ND	1.74		1
Methyl tert butyl ether	ND	0.020	ND	0.072		1
Naphthalene	ND	0.050	ND	0.262		1
Xylenes, Total	ND	0.060	ND	0.260		1
Tetrachloroethene	ND	0.020	ND	0.136		1
Toluene	ND	0.050	ND	0.188		1

Project Name: UNIFIRST PROPERTY IA / VI
Project Number: 1-2114-2

Lab Number: L1004721
Report Date: 04/10/10

SAMPLE RESULTS

Lab ID: L1004721-18
Client ID: CAN 1566 FC 262
Sample Location: WOBURN, MA

Date Collected: 04/02/10 00:00
Date Received: 04/03/10
Field Prep: Not Specified

Parameter	ppbV Results	ppbV RDL	ug/m3 Results	ug/m3 RDL	Qualifier	Dilution Factor
Volatile Organics in Air by SIM - Mansfield Lab						
trans-1,2-Dichloroethene	ND	0.020	ND	0.079		1
trans-1,3-Dichloropropene	ND	0.020	ND	0.091		1
Trichloroethene	ND	0.020	ND	0.107		1
Vinyl chloride	ND	0.020	ND	0.051		1
Isopropylbenzene	ND	0.500	ND	2.46		1

Project Name: UNIFIRST PROPERTY IA / VI
Project Number: 1-2114-2

Lab Number: L1004721
Report Date: 04/10/10

SAMPLE RESULTS

Lab ID: L1004721-19
Client ID: CAN 1626 FC 002
Sample Location: WOBURN, MA
Matrix: Air
Anaytical Method: 48,TO-15-SIM
Analytical Date: 04/06/10 20:13
Analyst: AJ

Date Collected: 04/02/10 00:00
Date Received: 04/03/10
Field Prep: Not Specified

Parameter	ppbV Results	ppbV RDL	ug/m3 Results	ug/m3 RDL	Qualifier	Dilution Factor
Volatile Organics in Air by SIM - Mansfield Lab						
1,1,1-Trichloroethane	ND	0.020	ND	0.109		1
1,1,2-Trichloroethane	ND	0.020	ND	0.109		1
1,1-Dichloroethane	ND	0.020	ND	0.081		1
1,1-Dichloroethene	ND	0.020	ND	0.079		1
1,2,4-Trimethylbenzene	ND	0.020	ND	0.098		1
1,2-Dibromoethane	ND	0.020	ND	0.154		1
1,2-Dichloroethane	ND	0.020	ND	0.081		1
1,2-Dichloropropane	ND	0.020	ND	0.092		1
1,3-Butadiene	ND	0.020	ND	0.044		1
1,3-Dichlorobenzene	ND	0.020	ND	0.120		1
1,4-Dichlorobenzene	ND	0.020	ND	0.120		1
Benzene	ND	0.070	ND	0.223		1
Bromodichloromethane	ND	0.020	ND	0.134		1
Bromoform	ND	0.020	ND	0.206		1
Carbon tetrachloride	ND	0.020	ND	0.126		1
Chlorobenzene	ND	0.020	ND	0.092		1
Chloroform	ND	0.020	ND	0.098		1
cis-1,2-Dichloroethene	ND	0.020	ND	0.079		1
Ethylbenzene	ND	0.020	ND	0.087		1
Methylene chloride	ND	0.500	ND	1.74		1
Methyl tert butyl ether	ND	0.020	ND	0.072		1
Naphthalene	ND	0.050	ND	0.262		1
Xylenes, Total	ND	0.060	ND	0.260		1
Tetrachloroethene	ND	0.020	ND	0.136		1
Toluene	ND	0.050	ND	0.188		1

Project Name: UNIFIRST PROPERTY IA / VI
Project Number: 1-2114-2

Lab Number: L1004721
Report Date: 04/10/10

SAMPLE RESULTS

Lab ID: L1004721-19
Client ID: CAN 1626 FC 002
Sample Location: WOBURN, MA

Date Collected: 04/02/10 00:00
Date Received: 04/03/10
Field Prep: Not Specified

Parameter	ppbV Results	ppbV RDL	ug/m3 Results	ug/m3 RDL	Qualifier	Dilution Factor
Volatile Organics in Air by SIM - Mansfield Lab						
trans-1,2-Dichloroethene	ND	0.020	ND	0.079		1
trans-1,3-Dichloropropene	ND	0.020	ND	0.091		1
Trichloroethene	ND	0.020	ND	0.107		1
Vinyl chloride	ND	0.020	ND	0.051		1
Isopropylbenzene	ND	0.500	ND	2.46		1

Project Name: UNIFIRST PROPERTY IA / VI
Project Number: 1-2114-2

Lab Number: L1004721
Report Date: 04/10/10

SAMPLE RESULTS

Lab ID: L1004721-20
Client ID: CAN 695 FC 290
Sample Location: WOBURN, MA
Matrix: Air
Anaytical Method: 48,TO-15-SIM
Analytical Date: 04/06/10 20:48
Analyst: AJ

Date Collected: 04/02/10 00:00
Date Received: 04/03/10
Field Prep: Not Specified

Parameter	ppbV Results	ppbV RDL	ug/m3 Results	ug/m3 RDL	Qualifier	Dilution Factor
Volatile Organics in Air by SIM - Mansfield Lab						
1,1,1-Trichloroethane	ND	0.020	ND	0.109		1
1,1,2-Trichloroethane	ND	0.020	ND	0.109		1
1,1-Dichloroethane	ND	0.020	ND	0.081		1
1,1-Dichloroethene	ND	0.020	ND	0.079		1
1,2,4-Trimethylbenzene	ND	0.020	ND	0.098		1
1,2-Dibromoethane	ND	0.020	ND	0.154		1
1,2-Dichloroethane	ND	0.020	ND	0.081		1
1,2-Dichloropropane	ND	0.020	ND	0.092		1
1,3-Butadiene	ND	0.020	ND	0.044		1
1,3-Dichlorobenzene	ND	0.020	ND	0.120		1
1,4-Dichlorobenzene	ND	0.020	ND	0.120		1
Benzene	ND	0.070	ND	0.223		1
Bromodichloromethane	ND	0.020	ND	0.134		1
Bromoform	ND	0.020	ND	0.206		1
Carbon tetrachloride	ND	0.020	ND	0.126		1
Chlorobenzene	ND	0.020	ND	0.092		1
Chloroform	ND	0.020	ND	0.098		1
cis-1,2-Dichloroethene	ND	0.020	ND	0.079		1
Ethylbenzene	ND	0.020	ND	0.087		1
Methylene chloride	ND	0.500	ND	1.74		1
Methyl tert butyl ether	ND	0.020	ND	0.072		1
Naphthalene	ND	0.050	ND	0.262		1
Xylenes, Total	ND	0.060	ND	0.260		1
Tetrachloroethene	ND	0.020	ND	0.136		1
Toluene	ND	0.050	ND	0.188		1

Project Name: UNIFIRST PROPERTY IA / VI
Project Number: 1-2114-2

Lab Number: L1004721
Report Date: 04/10/10

SAMPLE RESULTS

Lab ID: L1004721-20
Client ID: CAN 695 FC 290
Sample Location: WOBURN, MA

Date Collected: 04/02/10 00:00
Date Received: 04/03/10
Field Prep: Not Specified

Parameter	ppbV Results	ppbV RDL	ug/m3 Results	ug/m3 RDL	Qualifier	Dilution Factor
Volatile Organics in Air by SIM - Mansfield Lab						
trans-1,2-Dichloroethene	ND	0.020	ND	0.079		1
trans-1,3-Dichloropropene	ND	0.020	ND	0.091		1
Trichloroethene	ND	0.020	ND	0.107		1
Vinyl chloride	ND	0.020	ND	0.051		1
Isopropylbenzene	ND	0.500	ND	2.46		1

Project Name: UNIFIRST PROPERTY IA / VI
Project Number: 1-2114-2

Lab Number: L1004721
Report Date: 04/10/10

SAMPLE RESULTS

Lab ID: L1004721-21
Client ID: CAN 609 FC 183
Sample Location: WOBURN, MA
Matrix: Air
Anaytical Method: 48,TO-15-SIM
Analytical Date: 04/06/10 21:23
Analyst: AJ

Date Collected: 04/02/10 00:00
Date Received: 04/03/10
Field Prep: Not Specified

Parameter	ppbV Results	ppbV RDL	ug/m3 Results	ug/m3 RDL	Qualifier	Dilution Factor
Volatile Organics in Air by SIM - Mansfield Lab						
1,1,1-Trichloroethane	ND	0.020	ND	0.109		1
1,1,2-Trichloroethane	ND	0.020	ND	0.109		1
1,1-Dichloroethane	ND	0.020	ND	0.081		1
1,1-Dichloroethene	ND	0.020	ND	0.079		1
1,2,4-Trimethylbenzene	ND	0.020	ND	0.098		1
1,2-Dibromoethane	ND	0.020	ND	0.154		1
1,2-Dichloroethane	ND	0.020	ND	0.081		1
1,2-Dichloropropane	ND	0.020	ND	0.092		1
1,3-Butadiene	ND	0.020	ND	0.044		1
1,3-Dichlorobenzene	ND	0.020	ND	0.120		1
1,4-Dichlorobenzene	ND	0.020	ND	0.120		1
Benzene	ND	0.070	ND	0.223		1
Bromodichloromethane	ND	0.020	ND	0.134		1
Bromoform	ND	0.020	ND	0.206		1
Carbon tetrachloride	ND	0.020	ND	0.126		1
Chlorobenzene	ND	0.020	ND	0.092		1
Chloroform	ND	0.020	ND	0.098		1
cis-1,2-Dichloroethene	ND	0.020	ND	0.079		1
Ethylbenzene	ND	0.020	ND	0.087		1
Methylene chloride	ND	0.500	ND	1.74		1
Methyl tert butyl ether	ND	0.020	ND	0.072		1
Naphthalene	ND	0.050	ND	0.262		1
Xylenes, Total	ND	0.060	ND	0.260		1
Tetrachloroethene	ND	0.020	ND	0.136		1
Toluene	ND	0.050	ND	0.188		1

Project Name: UNIFIRST PROPERTY IA / VI
Project Number: 1-2114-2

Lab Number: L1004721
Report Date: 04/10/10

SAMPLE RESULTS

Lab ID: L1004721-21
Client ID: CAN 609 FC 183
Sample Location: WOBURN, MA

Date Collected: 04/02/10 00:00
Date Received: 04/03/10
Field Prep: Not Specified

Parameter	ppbV Results	ppbV RDL	ug/m3 Results	ug/m3 RDL	Qualifier	Dilution Factor
Volatile Organics in Air by SIM - Mansfield Lab						
trans-1,2-Dichloroethene	ND	0.020	ND	0.079		1
trans-1,3-Dichloropropene	ND	0.020	ND	0.091		1
Trichloroethene	ND	0.020	ND	0.107		1
Vinyl chloride	ND	0.020	ND	0.051		1
Isopropylbenzene	ND	0.500	ND	2.46		1

Project Name: UNIFIRST PROPERTY IA / VI
Project Number: 1-2114-2

Lab Number: L1004721
Report Date: 04/10/10

SAMPLE RESULTS

Lab ID:	L1004721-22	Date Collected:	04/02/10 00:00
Client ID:	CAN 1676 FC 205	Date Received:	04/03/10
Sample Location:	WOBURN, MA	Field Prep:	Not Specified
Matrix:	Air		
Anaytical Method:	48,TO-15-SIM		
Analytical Date:	04/06/10 21:56		
Analyst:	AJ		

Parameter	ppbV Results	ppbV RDL	ug/m3 Results	ug/m3 RDL	Qualifier	Dilution Factor
Volatile Organics in Air by SIM - Mansfield Lab						
1,1,1-Trichloroethane	ND	0.020	ND	0.109		1
1,1,2-Trichloroethane	ND	0.020	ND	0.109		1
1,1-Dichloroethane	ND	0.020	ND	0.081		1
1,1-Dichloroethene	ND	0.020	ND	0.079		1
1,2,4-Trimethylbenzene	ND	0.020	ND	0.098		1
1,2-Dibromoethane	ND	0.020	ND	0.154		1
1,2-Dichloroethane	ND	0.020	ND	0.081		1
1,2-Dichloropropane	ND	0.020	ND	0.092		1
1,3-Buladiene	ND	0.020	ND	0.044		1
1,3-Dichlorobenzene	ND	0.020	ND	0.120		1
1,4-Dichlorobenzene	ND	0.020	ND	0.120		1
Benzene	ND	0.070	ND	0.223		1
Bromodichloromethane	ND	0.020	ND	0.134		1
Bromoform	ND	0.020	ND	0.206		1
Carbon tetrachloride	ND	0.020	ND	0.126		1
Chlorobenzene	ND	0.020	ND	0.092		1
Chloroform	ND	0.020	ND	0.098		1
cis-1,2-Dichloroethene	ND	0.020	ND	0.079		1
Ethylbenzene	ND	0.020	ND	0.087		1
Methylene chloride	ND	0.500	ND	1.74		1
Methyl tert butyl ether	ND	0.020	ND	0.072		1
Naphthalene	ND	0.050	ND	0.262		1
Xylenes, Total	ND	0.060	ND	0.260		1
Tetrachloroethene	ND	0.020	ND	0.136		1
Toluene	ND	0.050	ND	0.188		1

Project Name: UNIFIRST PROPERTY IA / VI
Project Number: 1-2114-2

Lab Number: L1004721
Report Date: 04/10/10

SAMPLE RESULTS

Lab ID: L1004721-22
Client ID: CAN 1676 FC 205
Sample Location: WOBURN, MA

Date Collected: 04/02/10 00:00
Date Received: 04/03/10
Field Prep: Not Specified

Parameter	ppbV Results	ppbV RDL	ug/m3 Results	ug/m3 RDL	Qualifier	Dilution Factor
Volatile Organics in Air by SIM - Mansfield Lab						
trans-1,2-Dichloroethene	ND	0.020	ND	0.079		1
trans-1,3-Dichloropropene	ND	0.020	ND	0.091		1
Trichloroethene	ND	0.020	ND	0.107		1
Vinyl chloride	ND	0.020	ND	0.051		1
Isopropylbenzene	ND	0.500	ND	2.46		1

Project Name: UNIFIRST PROPERTY IA / VI
Project Number: 1-2114-2

Lab Number: L1004721
Report Date: 04/10/10

SAMPLE RESULTS

Lab ID: L1004721-23
Client ID: CAN 986 FC 406
Sample Location: WOBURN, MA
Matrix: Air
Anaytical Method: 48,TO-15-SIM
Analytical Date: 04/06/10 22:31
Analyst: AJ

Date Collected: 04/02/10 00:00
Date Received: 04/03/10
Field Prep: Not Specified

Parameter	ppbV Results	ppbV RDL	ug/m3 Results	ug/m3 RDL	Qualifier	Dilution Factor
Volatile Organics in Air by SIM - Mansfield Lab						
1,1,1-Trichloroethane	ND	0.020	ND	0.109		1
1,1,2-Trichloroethane	ND	0.020	ND	0.109		1
1,1-Dichloroethane	ND	0.020	ND	0.081		1
1,1-Dichloroethene	ND	0.020	ND	0.079		1
1,2,4-Trimethylbenzene	ND	0.020	ND	0.098		1
1,2-Dibromoethane	ND	0.020	ND	0.154		1
1,2-Dichloroethane	ND	0.020	ND	0.081		1
1,2-Dichloropropane	ND	0.020	ND	0.092		1
1,3-Butadiene	ND	0.020	ND	0.044		1
1,3-Dichlorobenzene	ND	0.020	ND	0.120		1
1,4-Dichlorobenzene	ND	0.020	ND	0.120		1
Benzene	ND	0.070	ND	0.223		1
Bromodichloromethane	ND	0.020	ND	0.134		1
Bromoform	ND	0.020	ND	0.206		1
Carbon tetrachloride	ND	0.020	ND	0.126		1
Chlorobenzene	ND	0.020	ND	0.092		1
Chloroform	ND	0.020	ND	0.098		1
cis-1,2-Dichloroethene	ND	0.020	ND	0.079		1
Ethylbenzene	ND	0.020	ND	0.087		1
Methylene chloride	ND	0.500	ND	1.74		1
Methyl tert butyl ether	ND	0.020	ND	0.072		1
Naphthalene	ND	0.050	ND	0.262		1
Xylenes, Total	ND	0.060	ND	0.260		1
Tetrachloroethene	ND	0.020	ND	0.136		1
Toluene	ND	0.050	ND	0.188		1

Project Name: UNIFIRST PROPERTY IA / VI
Project Number: 1-2114-2

Lab Number: L1004721
Report Date: 04/10/10

SAMPLE RESULTS

Lab ID: L1004721-23
Client ID: CAN 986 FC 406
Sample Location: WOBURN, MA

Date Collected: 04/02/10 00:00
Date Received: 04/03/10
Field Prep: Not Specified

Parameter	ppbV Results	ppbV RDL	ug/m3 Results	ug/m3 RDL	Qualifier	Dilution Factor
Volatile Organics in Air by SIM - Mansfield Lab						
trans-1,2-Dichloroethene	ND	0.020	ND	0.079		1
trans-1,3-Dichloropropene	ND	0.020	ND	0.091		1
Trichloroethene	ND	0.020	ND	0.107		1
Vinyl chloride	ND	0.020	ND	0.051		1
Isopropylbenzene	ND	0.500	ND	2.46		1

Project Name: UNIFIRST PROPERTY IA / VI
Project Number: 1-2114-2

Lab Number: L1004721
Report Date: 04/10/10

SAMPLE RESULTS

Lab ID: L1004721-24
Client ID: CAN 1704 FC 369
Sample Location: WOBURN, MA
Matrix: Air
Anaytical Method: 48,TO-15-SIM
Analytical Date: 04/06/10 23:06
Analyst: AJ

Date Collected: 04/02/10 00:00
Date Received: 04/03/10
Field Prep: Not Specified

Parameter	ppbV Results	ppbV RDL	ug/m3 Results	ug/m3 RDL	Qualifier	Dilution Factor
Volatile Organics in Air by SIM - Mansfield Lab						
1,1,1-Trichloroethane	ND	0.020	ND	0.109		1
1,1,2-Trichloroethane	ND	0.020	ND	0.109		1
1,1-Dichloroethane	ND	0.020	ND	0.081		1
1,1-Dichloroethene	ND	0.020	ND	0.079		1
1,2,4-Trimethylbenzene	ND	0.020	ND	0.098		1
1,2-Dibromoethane	ND	0.020	ND	0.154		1
1,2-Dichloroethane	ND	0.020	ND	0.081		1
1,2-Dichloropropane	ND	0.020	ND	0.092		1
1,3-Butadiene	ND	0.020	ND	0.044		1
1,3-Dichlorobenzene	ND	0.020	ND	0.120		1
1,4-Dichlorobenzene	ND	0.020	ND	0.120		1
Benzene	ND	0.070	ND	0.223		1
Bromodichloromethane	ND	0.020	ND	0.134		1
Bromoform	ND	0.020	ND	0.206		1
Carbon tetrachloride	ND	0.020	ND	0.126		1
Chlorobenzene	ND	0.020	ND	0.092		1
Chloroform	ND	0.020	ND	0.098		1
cis-1,2-Dichloroethene	ND	0.020	ND	0.079		1
Ethylbenzene	ND	0.020	ND	0.087		1
Methylene chloride	ND	0.500	ND	1.74		1
Methyl tert butyl ether	ND	0.020	ND	0.072		1
Naphthalene	ND	0.050	ND	0.262		1
Xylenes, Total	ND	0.060	ND	0.260		1
Tetrachloroethene	ND	0.020	ND	0.136		1
Toluene	ND	0.050	ND	0.188		1

Project Name: UNIFIRST PROPERTY IA / VI
Project Number: 1-2114-2

Lab Number: L1004721
Report Date: 04/10/10

SAMPLE RESULTS

Lab ID: L1004721-24
Client ID: CAN 1704 FC 369
Sample Location: WOBURN, MA

Date Collected: 04/02/10 00:00
Date Received: 04/03/10
Field Prep: Not Specified

Parameter	ppbV Results	ppbV RDL	ug/m3 Results	ug/m3 RDL	Qualifier	Dilution Factor
Volatile Organics in Air by SIM - Mansfield Lab						
trans-1,2-Dichloroethene	ND	0.020	ND	0.079		1
trans-1,3-Dichloropropene	ND	0.020	ND	0.091		1
Trichloroethene	ND	0.020	ND	0.107		1
Vinyl chloride	ND	0.020	ND	0.051		1
Isopropylbenzene	ND	0.500	ND	2.46		1

Project Name: UNIFIRST PROPERTY IA / VI
Project Number: 1-2114-2

Lab Number: L1004721
Report Date: 04/10/10

SAMPLE RESULTS

Lab ID: L1004721-25
Client ID: CAN 949 FC 242
Sample Location: WOBURN, MA
Matrix: Air
Anaytical Method: 48,TO-15-SIM
Analytical Date: 04/06/10 23:43
Analyst: AJ

Date Collected: 04/02/10 00:00
Date Received: 04/03/10
Field Prep: Not Specified

Parameter	ppbV Results	ppbV RDL	ug/m3 Results	ug/m3 RDL	Qualifier	Dilution Factor
Volatile Organics in Air by SIM - Mansfield Lab						
1,1,1-Trichloroethane	ND	0.020	ND	0.109		1
1,1,2-Trichloroethane	ND	0.020	ND	0.109		1
1,1-Dichloroethane	ND	0.020	ND	0.081		1
1,1-Dichloroethene	ND	0.020	ND	0.079		1
1,2,4-Trimethylbenzene	ND	0.020	ND	0.098		1
1,2-Dibromoethane	ND	0.020	ND	0.154		1
1,2-Dichloroethane	ND	0.020	ND	0.081		1
1,2-Dichloropropane	ND	0.020	ND	0.092		1
1,3-Butadiene	ND	0.020	ND	0.044		1
1,3-Dichlorobenzene	ND	0.020	ND	0.120		1
1,4-Dichlorobenzene	ND	0.020	ND	0.120		1
Benzene	ND	0.070	ND	0.223		1
Bromodichloromethane	ND	0.020	ND	0.134		1
Bromoform	ND	0.020	ND	0.206		1
Carbon tetrachloride	ND	0.020	ND	0.126		1
Chlorobenzene	ND	0.020	ND	0.092		1
Chloroform	ND	0.020	ND	0.098		1
cis-1,2-Dichloroethene	ND	0.020	ND	0.079		1
Ethylbenzene	ND	0.020	ND	0.087		1
Methylene chloride	ND	0.500	ND	1.74		1
Methyl tert butyl ether	ND	0.020	ND	0.072		1
Naphthalene	ND	0.050	ND	0.262		1
Xylenes, Total	ND	0.060	ND	0.260		1
Tetrachloroethene	ND	0.020	ND	0.136		1
Toluene	ND	0.050	ND	0.188		1

Project Name: UNIFIRST PROPERTY IA / VI
Project Number: 1-2114-2

Lab Number: L1004721
Report Date: 04/10/10

SAMPLE RESULTS

Lab ID: L1004721-25
Client ID: CAN 949 FC 242
Sample Location: WOBURN, MA

Date Collected: 04/02/10 00:00
Date Received: 04/03/10
Field Prep: Not Specified

Parameter	ppbV Results	ppbV RDL	ug/m3 Results	ug/m3 RDL	Qualifier	Dilution Factor
Volatile Organics in Air by SIM - Mansfield Lab						
trans-1,2-Dichloroethene	ND	0.020	ND	0.079		1
trans-1,3-Dichloropropene	ND	0.020	ND	0.091		1
Trichloroethene	ND	0.020	ND	0.107		1
Vinyl chloride	ND	0.020	ND	0.051		1
Isopropylbenzene	ND	0.500	ND	2.46		1

Project Name: UNIFIRST PROPERTY IA / VI
Project Number: 1-2114-2

Lab Number: L1004721
Report Date: 04/10/10

Method Blank Analysis
Batch Quality Control

Analytical Method: 48,TO-15-SIM
Analytical Date: 04/05/10 17:49

Parameter	ppbV Results	ppbV RDL	ug/m3 Results	ug/m3 RDL	Qualifier	Dilution Factor
Volatile Organics in Air by SIM - Mansfield Lab for sample(s): 01,03-13 Batch: WG406829-4						
1,1,1-Trichloroethane	ND	0.020	ND	0.109		1
1,1,2-Trichloroethane	ND	0.020	ND	0.109		1
1,1-Dichloroethane	ND	0.020	ND	0.081		1
1,1-Dichloroethene	ND	0.020	ND	0.079		1
1,2,4-Trimethylbenzene	ND	0.020	ND	0.098		1
1,2-Dibromoethane	ND	0.020	ND	0.154		1
1,2-Dichloroethane	ND	0.020	ND	0.081		1
1,2-Dichloropropane	ND	0.020	ND	0.092		1
1,3-Butadiene	ND	0.020	ND	0.044		1
1,3-Dichlorobenzene	ND	0.020	ND	0.120		1
1,4-Dichlorobenzene	ND	0.020	ND	0.120		1
Benzene	ND	0.070	ND	0.223		1
Bromodichloromethane	ND	0.020	ND	0.134		1
Bromoform	ND	0.020	ND	0.206		1
Carbon tetrachloride	ND	0.020	ND	0.126		1
Chlorobenzene	ND	0.020	ND	0.092		1
Chloroform	ND	0.020	ND	0.098		1
cis-1,2-Dichloroethene	ND	0.020	ND	0.079		1
Ethylbenzene	ND	0.020	ND	0.087		1
Methylene chloride	ND	0.500	ND	1.74		1
Methyl tert butyl ether	ND	0.020	ND	0.072		1
Naphthalene	ND	0.050	ND	0.262		1
Xylenes, Total	ND	0.060	ND	0.260		1
Tetrachloroethene	ND	0.020	ND	0.136		1
Toluene	ND	0.050	ND	0.188		1

Project Name: UNIFIRST PROPERTY IA / VI
Project Number: 1-2114-2

Lab Number: L1004721
Report Date: 04/10/10

Method Blank Analysis
Batch Quality Control

Analytical Method: 48,TO-15-SIM
Analytical Date: 04/05/10 17:49

Parameter	ppbV Results	ppbV RDL	ug/m3 Results	ug/m3 RDL	Qualifier	Dilution Factor
Volatile Organics in Air by SIM - Mansfield Lab for sample(s): 01,03-13 Batch: WG406829-4						
trans-1,2-Dichloroethene	ND	0.020	ND	0.079		1
trans-1,3-Dichloropropene	ND	0.020	ND	0.091		1
Trichloroethene	ND	0.020	ND	0.107		1
Vinyl chloride	ND	0.020	ND	0.051		1
Isopropylbenzene	ND	0.500	ND	2.46		1

Project Name: UNIFIRST PROPERTY IA / VI
Project Number: 1-2114-2

Lab Number: L1004721
Report Date: 04/10/10

Method Blank Analysis
Batch Quality Control

Analytical Method: 48,TO-15-SIM
Analytical Date: 04/06/10 16:42

Parameter	ppbV Results	ppbV RDL	ug/m3 Results	ug/m3 RDL	Qualifier	Dilution Factor
Volatile Organics in Air by SIM - Mansfield Lab for sample(s): 14-25 Batch: WG407057-4						
1,1,1-Trichloroethane	ND	0.020	ND	0.109		1
1,1,2-Trichloroethane	ND	0.020	ND	0.109		1
1,1-Dichloroethane	ND	0.020	ND	0.081		1
1,1-Dichloroethene	ND	0.020	ND	0.079		1
1,2,4-Trimethylbenzene	ND	0.020	ND	0.098		1
1,2-Dibromoethane	ND	0.020	ND	0.154		1
1,2-Dichloroethane	ND	0.020	ND	0.081		1
1,2-Dichloropropane	ND	0.020	ND	0.092		1
1,3-Butadiene	ND	0.020	ND	0.044		1
1,3-Dichlorobenzene	ND	0.020	ND	0.120		1
1,4-Dichlorobenzene	ND	0.020	ND	0.120		1
Benzene	ND	0.070	ND	0.223		1
Bromodichloromethane	ND	0.020	ND	0.134		1
Bromoform	ND	0.020	ND	0.206		1
Carbon tetrachloride	ND	0.020	ND	0.126		1
Chlorobenzene	ND	0.020	ND	0.092		1
Chloroform	ND	0.020	ND	0.098		1
cis-1,2-Dichloroethene	ND	0.020	ND	0.079		1
Ethylbenzene	ND	0.020	ND	0.087		1
Methylene chloride	ND	0.500	ND	1.74		1
Methyl tert butyl ether	ND	0.020	ND	0.072		1
Naphthalene	ND	0.050	ND	0.262		1
Xylenes, Total	ND	0.060	ND	0.260		1
Tetrachloroethene	ND	0.020	ND	0.136		1
Toluene	ND	0.050	ND	0.188		1

Project Name: UNIFIRST PROPERTY IA / VI
Project Number: 1-2114-2

Lab Number: L1004721
Report Date: 04/10/10

Method Blank Analysis
Batch Quality Control

Analytical Method: 48,TO-15-SIM
Analytical Date: 04/06/10 16:42

Parameter	ppbV Results	ppbV RDL	ug/m3 Results	ug/m3 RDL	Qualifier	Dilution Factor
Volatile Organics in Air by SIM - Mansfield Lab for sample(s): 14-25 Batch: WG407057-4						
trans-1,2-Dichloroethene	ND	0.020	ND	0.079		1
trans-1,3-Dichloropropene	ND	0.020	ND	0.091		1
Trichloroethene	ND	0.020	ND	0.107		1
Vinyl chloride	ND	0.020	ND	0.051		1
Isopropylbenzene	ND	0.500	ND	2.46		1

Lab Control Sample Analysis
Batch Quality Control

Project Name: UNIFIRST PROPERTY IA / VI
Project Number: 1-2114-2

Lab Number: L1004721
Report Date: 04/10/10

Parameter	LCS %Recovery	Qual	LCSD %Recovery	Qual	%Recovery Limits	RPD	Qual	RPD Limits
Volatile Organics in Air by SIM - Mansfield Lab Associated sample(s): 01,03-13 Batch: WG406829-3								
1,1,1-Trichloroethane	100		-		70-130	-		25
1,1,2-Trichloroethane	95		-		70-130	-		25
1,1-Dichloroethane	92		-		70-130	-		25
1,1-Dichloroethene	88		-		70-130	-		25
1,2,4-Trimethylbenzene	105		-		70-130	-		25
1,2-Dibromoethane	101		-		70-130	-		25
1,2-Dichloroethane	83		-		70-130	-		25
1,2-Dichloropropane	91		-		70-130	-		25
1,3-Butadiene	102		-		70-130	-		25
1,3-Dichlorobenzene	108		-		70-130	-		25
1,4-Dichlorobenzene	110		-		70-130	-		25
Benzene	90		-		70-130	-		25
Bromodichloromethane	96		-		70-130	-		25
Bromoform	110		-		70-130	-		25
Carbon tetrachloride	109		-		70-130	-		25
Chlorobenzene	102		-		70-130	-		25
Chloroform	92		-		70-130	-		25
cis-1,2-Dichloroethene	95		-		70-130	-		25
Ethylbenzene	97		-		70-130	-		25
Methylene chloride	81		-		70-130	-		25
Methyl tert butyl ether	88		-		70-130	-		25

Lab Control Sample Analysis
Batch Quality Control

Project Name: UNIFIRST PROPERTY IA / VI
Project Number: 1-2114-2

Lab Number: L1004721
Report Date: 04/10/10

Parameter	LCS %Recovery	Qual	LCSD %Recovery	Qual	%Recovery Limits	RPD	Qual	RPD Limits
Volatile Organics in Air by SIM - Mansfield Lab Associated sample(s): 01,03-13 Batch: WG406829-3								
Naphthalene	94		-		70-130	-		25
XYLENE (TOTAL)	99		-		70-130	-		25
Tetrachloroethene	100		-		70-130	-		25
Toluene	93		-		70-130	-		25
trans-1,2-Dichloroethene	93		-		70-130	-		25
trans-1,3-Dichloropropene	90		-		70-130	-		25
Trichloroethene	97		-		70-130	-		25
Vinyl chloride	95		-		70-130	-		25
Isopropylbenzene	94		-		70-130	-		25
Volatile Organics in Air by SIM - Mansfield Lab Associated sample(s): 14-25 Batch: WG407057-3								
1,1,1-Trichloroethane	109		-		70-130	-		25
1,1,2-Trichloroethane	88		-		70-130	-		25
1,1-Dichloroethane	83		-		70-130	-		25
1,1-Dichloroethene	91		-		70-130	-		25
1,2,4-Trimethylbenzene	90		-		70-130	-		25
1,2-Dibromoethane	91		-		70-130	-		25
1,2-Dichloroethane	90		-		70-130	-		25
1,2-Dichloropropane	79		-		70-130	-		25
1,3-Butadiene	91		-		70-130	-		25

Lab Control Sample Analysis
Batch Quality Control

Project Name: UNIFIRST PROPERTY IA / VI
Project Number: 1-2114-2

Lab Number: L1004721
Report Date: 04/10/10

Parameter	LCS %Recovery	Qual	LCSD %Recovery	Qual	%Recovery Limits	RPD	Qual	RPD Limits
Volatile Organics in Air by SIM - Mansfield Lab Associated sample(s): 14-25 Batch: WG407057-3								
1,3-Dichlorobenzene	101		-		70-130	-		25
1,4-Dichlorobenzene	102		-		70-130	-		25
Benzene	85		-		70-130	-		25
Bromodichloromethane	88		-		70-130	-		25
Bromoform	100		-		70-130	-		25
Carbon tetrachloride	96		-		70-130	-		25
Chlorobenzene	90		-		70-130	-		25
Chloroform	92		-		70-130	-		25
cis-1,2-Dichloroethene	86		-		70-130	-		25
Ethylbenzene	79		-		70-130	-		25
Methylene chloride	86		-		70-130	-		25
Methyl tert butyl ether	76		-		70-130	-		25
Naphthalene	103		-		70-130	-		25
XYLENE (TOTAL)	81		-		70-130	-		25
Tetrachloroethene	93		-		70-130	-		25
Toluene	79		-		70-130	-		25
trans-1,2-Dichloroethene	86		-		70-130	-		25
trans-1,3-Dichloropropene	78		-		70-130	-		25
Trichloroethene	91		-		70-130	-		25
Vinyl chloride	89		-		70-130	-		25
Isopropylbenzene	79		-		70-130	-		25

Lab Control Sample Analysis

Batch Quality Control

Project Name: UNIFIRST PROPERTY IA / VI

Project Number: 1-2114-2

Lab Number: L1004721

Report Date: 04/10/10

Parameter	LCS %Recovery	Qual	LCSD %Recovery	Qual	%Recovery Limits	RPD	Qual	RPD Limits
Volatile Organics in Air by SIM - Mansfield Lab Associated sample(s): 14-25 Batch: WG407057-3								

Project Name:	UNIFIRST PROPERTY IA / VI	**Lab Number:**	L1004721
Project Number:	1-2114-2	**Report Date:**	04/10/10

SAMPLE RESULTS

Lab ID:	L1004721-01	Date Collected:	04/02/10 00:00
Client ID:	CAN 785 FC 298	Date Received:	04/03/10
Sample Location:	WOBURN, MA	Field Prep:	Not Specified
Matrix:	Air		
Analytical Method:	96,APH		
Analytical Date:	04/06/10 08:08		
Analyst:	RY		

Quality Control Information

Sample Type:	10 ml/min Composite
Sample Container Type:	Canister - 6 Liter
Sampling Flow Controller:	Mechanical
Sampling Zone:	Unknown
Sampling Flow Meter RPD of pre & post-sampling calibration check:	<=20%
Were all QA/QC procedures REQUIRED by the method followed?	Yes
Were all performance/acceptance standards for the required procedures achieved?	Yes
Were significant modifications made to the method as specified in Sect 11.1.2?	No

Parameter	Result	Qualifier	Units	RDL	Dilution Factor
Petroleum Hydrocarbons in Air - Mansfield Lab					
1,3-Butadiene	ND		ug/m3	2.0	1
Methyl tert butyl ether	ND		ug/m3	2.0	1
Benzene	ND		ug/m3	2.0	1
Toluene	ND		ug/m3	2.0	1
Ethylbenzene	ND		ug/m3	2.0	1
p/m-Xylene	ND		ug/m3	4.0	1
o-Xylene	ND		ug/m3	2.0	1
Naphthalene	ND		ug/m3	2.0	1
C5-C8 Aliphatics, Adjusted	ND		ug/m3	12	1
C9-C12 Aliphatics, Adjusted	ND		ug/m3	14	1
C9-C10 Aromatics	ND		ug/m3	10	1

Project Name:	UNIFIRST PROPERTY IA / VI	**Lab Number:**	L1004721
Project Number:	1-2114-2	**Report Date:**	04/10/10

SAMPLE RESULTS

Lab ID:	L1004721-03	Date Collected:	04/02/10 00:00
Client ID:	CAN 1559 FC 074	Date Received:	04/03/10
Sample Location:	WOBURN, MA	Field Prep:	Not Specified
Matrix:	Air		
Analytical Method:	96,APH		
Analytical Date:	04/05/10 21:34		
Analyst:	RY		

Quality Control Information

Sample Type:	10 ml/min Composite
Sample Container Type:	Canister - 6 Liter
Sampling Flow Controller:	Mechanical
Sampling Zone:	Unknown
Sampling Flow Meter RPD of pre & post-sampling calibration check:	<=20%
Were all QA/QC procedures REQUIRED by the method followed?	Yes
Were all performance/acceptance standards for the required procedures achieved?	Yes
Were significant modifications made to the method as specified in Sect 11.1.2?	No

Parameter	Result	Qualifier	Units	RDL	Dilution Factor
Petroleum Hydrocarbons in Air - Mansfield Lab					
1,3-Butadiene	ND		ug/m3	2.0	1
Methyl tert butyl ether	ND		ug/m3	2.0	1
Benzene	ND		ug/m3	2.0	1
Toluene	ND		ug/m3	2.0	1
Ethylbenzene	ND		ug/m3	2.0	1
p/m-Xylene	ND		ug/m3	4.0	1
o-Xylene	ND		ug/m3	2.0	1
Naphthalene	ND		ug/m3	2.0	1
C5-C8 Aliphatics, Adjusted	ND		ug/m3	12	1
C9-C12 Aliphatics, Adjusted	ND		ug/m3	14	1
C9-C10 Aromatics	ND		ug/m3	10	1

Project Name:	UNIFIRST PROPERTY IA / VI	**Lab Number:**	L1004721
Project Number:	1-2114-2	**Report Date:**	04/10/10

SAMPLE RESULTS

Lab ID:	L1004721-04	Date Collected:	04/02/10 00:00
Client ID:	CAN 945 FC 256	Date Received:	04/03/10
Sample Location:	WOBURN, MA	Field Prep:	Not Specified
Matrix:	Air		
Analytical Method:	96,APH		
Analytical Date:	04/05/10 22:10		
Analyst:	RY		

Quality Control Information

Sample Type:	10 ml/min Composite
Sample Container Type:	Canister - 6 Liter
Sampling Flow Controller:	Mechanical
Sampling Zone:	Unknown
Sampling Flow Meter RPD of pre & post-sampling calibration check:	<=20%
Were all QA/QC procedures REQUIRED by the method followed?	Yes
Were all performance/acceptance standards for the required procedures achieved?	Yes
Were significant modifications made to the method as specified in Sect 11.1.2?	No

Parameter	Result	Qualifier	Units	RDL	Dilution Factor
Petroleum Hydrocarbons in Air - Mansfield Lab					
1,3-Butadiene	ND		ug/m3	2.0	1
Methyl tert butyl ether	ND		ug/m3	2.0	1
Benzene	ND		ug/m3	2.0	1
Toluene	ND		ug/m3	2.0	1
Ethylbenzene	ND		ug/m3	2.0	1
p/m-Xylene	ND		ug/m3	4.0	1
o-Xylene	ND		ug/m3	2.0	1
Naphthalene	ND		ug/m3	2.0	1
C5-C8 Aliphatics, Adjusted	ND		ug/m3	12	1
C9-C12 Aliphatics, Adjusted	ND		ug/m3	14	1
C9-C10 Aromatics	ND		ug/m3	10	1

Project Name:	UNIFIRST PROPERTY IA / VI	**Lab Number:**	L1004721
Project Number:	1-2114-2	**Report Date:**	04/10/10

SAMPLE RESULTS

Lab ID:	L1004721-05	Date Collected:	04/02/10 00:00
Client ID:	CAN 762 FC 233	Date Received:	04/03/10
Sample Location:	WOBURN, MA	Field Prep:	Not Specified
Matrix:	Air		
Analytical Method:	96,APH		
Analytical Date:	04/05/10 22:46		
Analyst:	RY		

Quality Control Information

Sample Type:	10 ml/min Composite
Sample Container Type:	Canister - 6 Liter
Sampling Flow Controller:	Mechanical
Sampling Zone:	Unknown
Sampling Flow Meter RPD of pre & post-sampling calibration check:	<=20%
Were all QA/QC procedures REQUIRED by the method followed?	Yes
Were all performance/acceptance standards for the required procedures achieved?	Yes
Were significant modifications made to the method as specified in Sect 11.1.2?	No

Parameter	Result	Qualifier	Units	RDL	Dilution Factor
Petroleum Hydrocarbons in Air - Mansfield Lab					
1,3-Butadiene	ND		ug/m3	2.0	1
Methyl tert butyl ether	ND		ug/m3	2.0	1
Benzene	ND		ug/m3	2.0	1
Toluene	ND		ug/m3	2.0	1
Ethylbenzene	ND		ug/m3	2.0	1
p/m-Xylene	ND		ug/m3	4.0	1
o-Xylene	ND		ug/m3	2.0	1
Naphthalene	ND		ug/m3	2.0	1
C5-C8 Aliphatics, Adjusted	ND		ug/m3	12	1
C9-C12 Aliphatics, Adjusted	ND		ug/m3	14	1
C9-C10 Aromatics	ND		ug/m3	10	1

Project Name:	UNIFIRST PROPERTY IA / VI	**Lab Number:**	L1004721
Project Number:	1-2114-2	**Report Date:**	04/10/10

SAMPLE RESULTS

Lab ID:	L1004721-06	Date Collected:	04/02/10 00:00
Client ID:	CAN 1707 FC 356	Date Received:	04/03/10
Sample Location:	WOBURN, MA	Field Prep:	Not Specified
Matrix:	Air		
Analytical Method:	96,APH		
Analytical Date:	04/05/10 23:21		
Analyst:	RY		

Quality Control Information

Sample Type:	10 ml/min Composite
Sample Container Type:	Canister - 6 Liter
Sampling Flow Controller:	Mechanical
Sampling Zone:	Unknown
Sampling Flow Meter RPD of pre & post-sampling calibration check:	<=20%
Were all QA/QC procedures REQUIRED by the method followed?	Yes
Were all performance/acceptance standards for the required procedures achieved?	Yes
Were significant modifications made to the method as specified in Sect 11.1.2?	No

Parameter	Result	Qualifier	Units	RDL	Dilution Factor
Petroleum Hydrocarbons in Air - Mansfield Lab					
1,3-Butadiene	ND		ug/m3	2.0	1
Methyl tert butyl ether	ND		ug/m3	2.0	1
Benzene	ND		ug/m3	2.0	1
Toluene	ND		ug/m3	2.0	1
Ethylbenzene	ND		ug/m3	2.0	1
p/m-Xylene	ND		ug/m3	4.0	1
o-Xylene	ND		ug/m3	2.0	1
Naphthalene	ND		ug/m3	2.0	1
C5-C8 Aliphatics, Adjusted	ND		ug/m3	12	1
C9-C12 Aliphatics, Adjusted	ND		ug/m3	14	1
C9-C10 Aromatics	ND		ug/m3	10	1

Project Name:	UNIFIRST PROPERTY IA / VI	**Lab Number:**	L1004721
Project Number:	1-2114-2	**Report Date:**	04/10/10

SAMPLE RESULTS

Lab ID:	L1004721-07	Date Collected:	04/02/10 00:00
Client ID:	CAN 983 FC 349	Date Received:	04/03/10
Sample Location:	WOBURN, MA	Field Prep:	Not Specified
Matrix:	Air		
Analytical Method:	96,APH		
Analytical Date:	04/05/10 23:58		
Analyst:	RY		

Quality Control Information

Sample Type:	10 ml/min Composite
Sample Container Type:	Canister - 6 Liter
Sampling Flow Controller:	Mechanical
Sampling Zone:	Unknown
Sampling Flow Meter RPD of pre & post-sampling calibration check:	<=20%
Were all QA/QC procedures REQUIRED by the method followed?	Yes
Were all performance/acceptance standards for the required procedures achieved?	Yes
Were significant modifications made to the method as specified in Sect 11.1.2?	No

Parameter	Result	Qualifier	Units	RDL	Dilution Factor
Petroleum Hydrocarbons in Air - Mansfield Lab					
1,3-Butadiene	ND		ug/m3	2.0	1
Methyl tert butyl ether	ND		ug/m3	2.0	1
Benzene	ND		ug/m3	2.0	1
Toluene	ND		ug/m3	2.0	1
Ethylbenzene	ND		ug/m3	2.0	1
p/m-Xylene	ND		ug/m3	4.0	1
o-Xylene	ND		ug/m3	2.0	1
Naphthalene	ND		ug/m3	2.0	1
C5-C8 Aliphatics, Adjusted	ND		ug/m3	12	1
C9-C12 Aliphatics, Adjusted	ND		ug/m3	14	1
C9-C10 Aromatics	ND		ug/m3	10	1

Project Name:	UNIFIRST PROPERTY IA / VI	**Lab Number:**	L1004721
Project Number:	1-2114-2	**Report Date:**	04/10/10

SAMPLE RESULTS

Lab ID:	L1004721-08	Date Collected:	04/02/10 00:00
Client ID:	CAN 618 FC 047	Date Received:	04/03/10
Sample Location:	WOBURN, MA	Field Prep:	Not Specified
Matrix:	Air		
Analytical Method:	96,APH		
Analytical Date:	04/06/10 00:34		
Analyst:	RY		

Quality Control Information

Sample Type:	10 ml/min Composite
Sample Container Type:	Canister - 6 Liter
Sampling Flow Controller:	Mechanical
Sampling Zone:	Unknown
Sampling Flow Meter RPD of pre & post-sampling calibration check:	<=20%
Were all QA/QC procedures REQUIRED by the method followed?	Yes
Were all performance/acceptance standards for the required procedures achieved?	Yes
Were significant modifications made to the method as specified in Sect 11.1.2?	No

Parameter	Result	Qualifier	Units	RDL	Dilution Factor
Petroleum Hydrocarbons in Air - Mansfield Lab					
1,3-Buladiene	ND		ug/m3	2.0	1
Methyl tert butyl ether	ND		ug/m3	2.0	1
Benzene	ND		ug/m3	2.0	1
Toluene	ND		ug/m3	2.0	1
Ethylbenzene	ND		ug/m3	2.0	1
p/m-Xylene	ND		ug/m3	4.0	1
o-Xylene	ND		ug/m3	2.0	1
Naphthalene	ND		ug/m3	2.0	1
C5-C8 Aliphatics, Adjusted	ND		ug/m3	12	1
C9-C12 Aliphatics, Adjusted	ND		ug/m3	14	1
C9-C10 Aromatics	ND		ug/m3	10	1

Project Name:	UNIFIRST PROPERTY IA / VI	**Lab Number:**	L1004721
Project Number:	1-2114-2	**Report Date:**	04/10/10

SAMPLE RESULTS

Lab ID:	L1004721-09	Date Collected:	04/02/10 00:00
Client ID:	CAN 1667 FC 379	Date Received:	04/03/10
Sample Location:	WOBURN, MA	Field Prep:	Not Specified
Matrix:	Air		
Analytical Method:	96,APH		
Analytical Date:	04/06/10 01:10		
Analyst:	RY		

Quality Control Information

Sample Type:	10 ml/min Composite
Sample Container Type:	Canister - 6 Liter
Sampling Flow Controller:	Mechanical
Sampling Zone:	Unknown
Sampling Flow Meter RPD of pre & post-sampling calibration check:	<=20%
Were all QA/QC procedures REQUIRED by the method followed?	Yes
Were all performance/acceptance standards for the required procedures achieved?	Yes
Were significant modifications made to the method as specified in Sect 11.1.2?	No

Parameter	Result	Qualifier	Units	RDL	Dilution Factor
Petroleum Hydrocarbons in Air - Mansfield Lab					
1,3-Butadiene	ND		ug/m3	2.0	1
Methyl tert butyl ether	ND		ug/m3	2.0	1
Benzene	ND		ug/m3	2.0	1
Toluene	ND		ug/m3	2.0	1
Ethylbenzene	ND		ug/m3	2.0	1
p/m-Xylene	ND		ug/m3	4.0	1
o-Xylene	ND		ug/m3	2.0	1
Naphthalene	ND		ug/m3	2.0	1
C5-C8 Aliphatics, Adjusted	ND		ug/m3	12	1
C9-C12 Aliphatics, Adjusted	ND		ug/m3	14	1
C9-C10 Aromatics	ND		ug/m3	10	1

Project Name:	UNIFIRST PROPERTY IA / VI	**Lab Number:**	L1004721
Project Number:	1-2114-2	**Report Date:**	04/10/10

SAMPLE RESULTS

Lab ID:	L1004721-10	Date Collected:	04/02/10 00:00
Client ID:	CAN 584 FC 081	Date Received:	04/03/10
Sample Location:	WOBURN, MA	Field Prep:	Not Specified
Matrix:	Air		
Analytical Method:	96,APH		
Analytical Date:	04/06/10 01:44		
Analyst:	RY		

Quality Control Information

Sample Type:	10 ml/min Composite
Sample Container Type:	Canister - 6 Liter
Sampling Flow Controller:	Mechanical
Sampling Zone:	Unknown
Sampling Flow Meter RPD of pre & post-sampling calibration check:	<=20%
Were all QA/QC procedures REQUIRED by the method followed?	Yes
Were all performance/acceptance standards for the required procedures achieved?	Yes
Were significant modifications made to the method as specified in Sect 11.1.2?	No

Parameter	Result	Qualifier	Units	RDL	Dilution Factor
Petroleum Hydrocarbons in Air - Mansfield Lab					
1,3-Butadiene	ND		ug/m3	2.0	1
Methyl tert butyl ether	ND		ug/m3	2.0	1
Benzene	ND		ug/m3	2.0	1
Toluene	ND		ug/m3	2.0	1
Ethylbenzene	ND		ug/m3	2.0	1
p/m-Xylene	ND		ug/m3	4.0	1
o-Xylene	ND		ug/m3	2.0	1
Naphthalene	ND		ug/m3	2.0	1
C5-C8 Aliphatics, Adjusted	ND		ug/m3	12	1
C9-C12 Aliphatics, Adjusted	ND		ug/m3	14	1
C9-C10 Aromatics	ND		ug/m3	10	1

Project Name:	UNIFIRST PROPERTY IA / VI	**Lab Number:**	L1004721
Project Number:	1-2114-2	**Report Date:**	04/10/10

SAMPLE RESULTS

Lab ID:	L1004721-11	Date Collected:	04/02/10 00:00
Client ID:	CAN 1036 FC 333	Date Received:	04/03/10
Sample Location:	WOBURN, MA	Field Prep:	Not Specified
Matrix:	Air		
Analytical Method:	96,APH		
Analytical Date:	04/06/10 02:19		
Analyst:	RY		

Quality Control Information

Sample Type:	10 ml/min Composite
Sample Container Type:	Canister - 6 Liter
Sampling Flow Controller:	Mechanical
Sampling Zone:	Unknown
Sampling Flow Meter RPD of pre & post-sampling calibration check:	<=20%
Were all QA/QC procedures REQUIRED by the method followed?	Yes
Were all performance/acceptance standards for the required procedures achieved?	Yes
Were significant modifications made to the method as specified in Sect 11.1.2?	No

Parameter	Result	Qualifier	Units	RDL	Dilution Factor
Petroleum Hydrocarbons in Air - Mansfield Lab					
1,3-Butadiene	ND		ug/m3	2.0	1
Methyl tert butyl ether	ND		ug/m3	2.0	1
Benzene	ND		ug/m3	2.0	1
Toluene	ND		ug/m3	2.0	1
Ethylbenzene	ND		ug/m3	2.0	1
p/m-Xylene	ND		ug/m3	4.0	1
o-Xylene	ND		ug/m3	2.0	1
Naphthalene	ND		ug/m3	2.0	1
C5-C8 Aliphatics, Adjusted	ND		ug/m3	12	1
C9-C12 Aliphatics, Adjusted	ND		ug/m3	14	1
C9-C10 Aromatics	ND		ug/m3	10	1

Project Name:	UNIFIRST PROPERTY IA / VI	**Lab Number:**	L1004721
Project Number:	1-2114-2	**Report Date:**	04/10/10

SAMPLE RESULTS

Lab ID:	L1004721-12	Date Collected:	04/02/10 00:00
Client ID:	CAN 782 FC 175	Date Received:	04/03/10
Sample Location:	WOBURN, MA	Field Prep:	Not Specified
Matrix:	Air		
Analytical Method:	96,APH		
Analytical Date:	04/06/10 02:53		
Analyst:	RY		

Quality Control Information

Sample Type:	10 ml/min Composite
Sample Container Type:	Canister - 6 Liter
Sampling Flow Controller:	Mechanical
Sampling Zone:	Unknown
Sampling Flow Meter RPD of pre & post-sampling calibration check:	<=20%
Were all QA/QC procedures REQUIRED by the method followed?	Yes
Were all performance/acceptance standards for the required procedures achieved?	Yes
Were significant modifications made to the method as specified in Sect 11.1.2?	No

Parameter	Result	Qualifier	Units	RDL	Dilution Factor
Petroleum Hydrocarbons in Air - Mansfield Lab					
1,3-Butadiene	ND		ug/m3	2.0	1
Methyl tert butyl ether	ND		ug/m3	2.0	1
Benzene	ND		ug/m3	2.0	1
Toluene	ND		ug/m3	2.0	1
Ethylbenzene	ND		ug/m3	2.0	1
p/m-Xylene	ND		ug/m3	4.0	1
o-Xylene	ND		ug/m3	2.0	1
Naphthalene	ND		ug/m3	2.0	1
C5-C8 Aliphatics, Adjusted	ND		ug/m3	12	1
C9-C12 Aliphatics, Adjusted	ND		ug/m3	14	1
C9-C10 Aromatics	ND		ug/m3	10	1

Project Name:	UNIFIRST PROPERTY IA / VI	**Lab Number:**	L1004721
Project Number:	1-2114-2	**Report Date:**	04/10/10

SAMPLE RESULTS

Lab ID:	L1004721-13	Date Collected:	04/02/10 00:00
Client ID:	CAN 1628 FC 360	Date Received:	04/03/10
Sample Location:	WOBURN, MA	Field Prep:	Not Specified
Matrix:	Air		
Analytical Method:	96,APH		
Analytical Date:	04/06/10 03:27		
Analyst:	RY		

Quality Control Information

Sample Type:	100 ml/min Composite
Sample Container Type:	Canister - 6 Liter
Sampling Flow Controller:	Mechanical
Sampling Zone:	Unknown
Sampling Flow Meter RPD of pre & post-sampling calibration check:	<=20%
Were all QA/QC procedures REQUIRED by the method followed?	Yes
Were all performance/acceptance standards for the required procedures achieved?	Yes
Were significant modifications made to the method as specified in Sect 11.1.2?	No

Parameter	Result	Qualifier	Units	RDL	Dilution Factor
Petroleum Hydrocarbons in Air - Mansfield Lab					
1,3-Butadiene	ND		ug/m3	2.0	1
Methyl tert butyl ether	ND		ug/m3	2.0	1
Benzene	ND		ug/m3	2.0	1
Toluene	ND		ug/m3	2.0	1
Ethylbenzene	ND		ug/m3	2.0	1
p/m-Xylene	ND		ug/m3	4.0	1
o-Xylene	ND		ug/m3	2.0	1
Naphthalene	ND		ug/m3	2.0	1
C5-C8 Aliphatics, Adjusted	ND		ug/m3	12	1
C9-C12 Aliphatics, Adjusted	ND		ug/m3	14	1
C9-C10 Aromatics	ND		ug/m3	10	1

Project Name:	UNIFIRST PROPERTY IA / VI	**Lab Number:**	L1004721
Project Number:	1-2114-2	**Report Date:**	04/10/10

SAMPLE RESULTS

Lab ID:	L1004721-14	Date Collected:	04/02/10 00:00
Client ID:	CAN 972 FC 277	Date Received:	04/03/10
Sample Location:	WOBURN, MA	Field Prep:	Not Specified
Matrix:	Air		
Analytical Method:	96,APH		
Analytical Date:	04/06/10 17:18		
Analyst:	RY		

Quality Control Information

Sample Type:	10 ml/min Composite
Sample Container Type:	Canister - 6 Liter
Sampling Flow Controller:	Mechanical
Sampling Zone:	Unknown
Sampling Flow Meter RPD of pre & post-sampling calibration check:	<=20%
Were all QA/QC procedures REQUIRED by the method followed?	Yes
Were all performance/acceptance standards for the required procedures achieved?	Yes
Were significant modifications made to the method as specified in Sect 11.1.2?	No

Parameter	Result	Qualifier	Units	RDL	Dilution Factor
Petroleum Hydrocarbons in Air - Mansfield Lab					
1,3-Butadiene	ND		ug/m3	2.0	1
Methyl tert butyl ether	ND		ug/m3	2.0	1
Benzene	ND		ug/m3	2.0	1
Toluene	ND		ug/m3	2.0	1
Ethylbenzene	ND		ug/m3	2.0	1
p/m-Xylene	ND		ug/m3	4.0	1
o-Xylene	ND		ug/m3	2.0	1
Naphthalene	ND		ug/m3	2.0	1
C5-C8 Aliphatics, Adjusted	ND		ug/m3	12	1
C9-C12 Aliphatics, Adjusted	ND		ug/m3	14	1
C9-C10 Aromatics	ND		ug/m3	10	1

Project Name:	UNIFIRST PROPERTY IA / VI	**Lab Number:**	L1004721
Project Number:	1-2114-2	**Report Date:**	04/10/10

SAMPLE RESULTS

Lab ID:	L1004721-15	Date Collected:	04/02/10 00:00
Client ID:	CAN 1690 FC 028	Date Received:	04/03/10
Sample Location:	WOBURN, MA	Field Prep:	Not Specified
Matrix:	Air		
Analytical Method:	96,APH		
Analytical Date:	04/06/10 17:53		
Analyst:	RY		

Quality Control Information

Sample Type:	10 ml/min Composite
Sample Container Type:	Canister - 6 Liter
Sampling Flow Controller:	Mechanical
Sampling Zone:	Unknown
Sampling Flow Meter RPD of pre & post-sampling calibration check:	<=20%
Were all QA/QC procedures REQUIRED by the method followed?	Yes
Were all performance/acceptance standards for the required procedures achieved?	Yes
Were significant modifications made to the method as specified in Sect 11.1.2?	No

Parameter	Result	Qualifier	Units	RDL	Dilution Factor
Petroleum Hydrocarbons in Air - Mansfield Lab					
1,3-Butadiene	ND		ug/m3	2.0	1
Methyl tert butyl ether	ND		ug/m3	2.0	1
Benzene	ND		ug/m3	2.0	1
Toluene	ND		ug/m3	2.0	1
Ethylbenzene	ND		ug/m3	2.0	1
p/m-Xylene	ND		ug/m3	4.0	1
o-Xylene	ND		ug/m3	2.0	1
Naphthalene	ND		ug/m3	2.0	1
C5-C8 Aliphatics, Adjusted	ND		ug/m3	12	1
C9-C12 Aliphatics, Adjusted	ND		ug/m3	14	1
C9-C10 Aromatics	ND		ug/m3	10	1

Project Name:	UNIFIRST PROPERTY IA / VI	**Lab Number:**	L1004721
Project Number:	1-2114-2	**Report Date:**	04/10/10

SAMPLE RESULTS

Lab ID:	L1004721-16	Date Collected:	04/02/10 00:00
Client ID:	CAN 1614 FC 309	Date Received:	04/03/10
Sample Location:	WOBURN, MA	Field Prep:	Not Specified
Matrix:	Air		
Analytical Method:	96,APH		
Analytical Date:	04/06/10 18:28		
Analyst:	RY		

Quality Control Information

Sample Type:	10 ml/min Composite
Sample Container Type:	Canister - 6 Liter
Sampling Flow Controller:	Mechanical
Sampling Zone:	Unknown
Sampling Flow Meter RPD of pre & post-sampling calibration check:	<=20%
Were all QA/QC procedures REQUIRED by the method followed?	Yes
Were all performance/acceptance standards for the required procedures achieved?	Yes
Were significant modifications made to the method as specified in Sect 11.1.2?	No

Parameter	Result	Qualifier	Units	RDL	Dilution Factor
Petroleum Hydrocarbons in Air - Mansfield Lab					
1,3-Butadiene	ND		ug/m3	2.0	1
Methyl tert butyl ether	ND		ug/m3	2.0	1
Benzene	ND		ug/m3	2.0	1
Toluene	ND		ug/m3	2.0	1
Ethylbenzene	ND		ug/m3	2.0	1
p/m-Xylene	ND		ug/m3	4.0	1
o-Xylene	ND		ug/m3	2.0	1
Naphthalene	ND		ug/m3	2.0	1
C5-C8 Aliphatics, Adjusted	ND		ug/m3	12	1
C9-C12 Aliphatics, Adjusted	ND		ug/m3	14	1
C9-C10 Aromatics	ND		ug/m3	10	1

Project Name:	UNIFIRST PROPERTY IA / VI	**Lab Number:**	L1004721
Project Number:	1-2114-2	**Report Date:**	04/10/10

SAMPLE RESULTS

Lab ID:	L1004721-17	Date Collected:	04/02/10 00:00
Client ID:	CAN 639 FC 231	Date Received:	04/03/10
Sample Location:	WOBURN, MA	Field Prep:	Not Specified
Matrix:	Air		
Analytical Method:	96,APH		
Analytical Date:	04/06/10 19:03		
Analyst:	RY		

Quality Control Information

Sample Type:	10 ml/min Composite
Sample Container Type:	Canister - 6 Liter
Sampling Flow Controller:	Mechanical
Sampling Zone:	Unknown
Sampling Flow Meter RPD of pre & post-sampling calibration check:	<=20%
Were all QA/QC procedures REQUIRED by the method followed?	Yes
Were all performance/acceptance standards for the required procedures achieved?	Yes
Were significant modifications made to the method as specified in Sect 11.1.2?	No

Parameter	Result	Qualifier	Units	RDL	Dilution Factor
Petroleum Hydrocarbons in Air - Mansfield Lab					
1,3-Butadiene	ND		ug/m3	2.0	1
Methyl tert butyl ether	ND		ug/m3	2.0	1
Benzene	ND		ug/m3	2.0	1
Toluene	ND		ug/m3	2.0	1
Ethylbenzene	ND		ug/m3	2.0	1
p/m-Xylene	ND		ug/m3	4.0	1
o-Xylene	ND		ug/m3	2.0	1
Naphthalene	ND		ug/m3	2.0	1
C5-C8 Aliphatics, Adjusted	ND		ug/m3	12	1
C9-C12 Aliphatics, Adjusted	ND		ug/m3	14	1
C9-C10 Aromatics	ND		ug/m3	10	1

Project Name:	UNIFIRST PROPERTY IA / VI	**Lab Number:**	L1004721
Project Number:	1-2114-2	**Report Date:**	04/10/10

SAMPLE RESULTS

Lab ID:	L1004721-18	Date Collected:	04/02/10 00:00
Client ID:	CAN 1566 FC 262	Date Received:	04/03/10
Sample Location:	WOBURN, MA	Field Prep:	Not Specified
Matrix:	Air		
Analytical Method:	96,APH		
Analytical Date:	04/06/10 19:38		
Analyst:	RY		

Quality Control Information

Sample Type:	10 ml/min Composite
Sample Container Type:	Canister - 6 Liter
Sampling Flow Controller:	Mechanical
Sampling Zone:	Unknown
Sampling Flow Meter RPD of pre & post-sampling calibration check:	<=20%
Were all QA/QC procedures REQUIRED by the method followed?	Yes
Were all performance/acceptance standards for the required procedures achieved?	Yes
Were significant modifications made to the method as specified in Sect 11.1.2?	No

Parameter	Result	Qualifier	Units	RDL	Dilution Factor
Petroleum Hydrocarbons in Air - Mansfield Lab					
1,3-Butadiene	ND		ug/m3	2.0	1
Methyl tert butyl ether	ND		ug/m3	2.0	1
Benzene	ND		ug/m3	2.0	1
Toluene	ND		ug/m3	2.0	1
Ethylbenzene	ND		ug/m3	2.0	1
p/m-Xylene	ND		ug/m3	4.0	1
o-Xylene	ND		ug/m3	2.0	1
Naphthalene	ND		ug/m3	2.0	1
C5-C8 Aliphatics, Adjusted	ND		ug/m3	12	1
C9-C12 Aliphatics, Adjusted	ND		ug/m3	14	1
C9-C10 Aromatics	ND		ug/m3	10	1

Project Name:	UNIFIRST PROPERTY IA / VI	**Lab Number:**	L1004721
Project Number:	1-2114-2	**Report Date:**	04/10/10

SAMPLE RESULTS

Lab ID:	L1004721-19	Date Collected:	04/02/10 00:00
Client ID:	CAN 1626 FC 002	Date Received:	04/03/10
Sample Location:	WOBURN, MA	Field Prep:	Not Specified
Matrix:	Air		
Analytical Method:	96,APH		
Analytical Date:	04/06/10 20:13		
Analyst:	RY		

Quality Control Information

Sample Type:	10 ml/min Composite
Sample Container Type:	Canister - 6 Liter
Sampling Flow Controller:	Mechanical
Sampling Zone:	Unknown
Sampling Flow Meter RPD of pre & post-sampling calibration check:	<=20%
Were all QA/QC procedures REQUIRED by the method followed?	Yes
Were all performance/acceptance standards for the required procedures achieved?	Yes
Were significant modifications made to the method as specified in Sect 11.1.2?	No

Parameter	Result	Qualifier	Units	RDL	Dilution Factor
Petroleum Hydrocarbons in Air - Mansfield Lab					
1,3-Butadiene	ND		ug/m3	2.0	1
Methyl tert butyl ether	ND		ug/m3	2.0	1
Benzene	ND		ug/m3	2.0	1
Toluene	ND		ug/m3	2.0	1
Ethylbenzene	ND		ug/m3	2.0	1
p/m-Xylene	ND		ug/m3	4.0	1
o-Xylene	ND		ug/m3	2.0	1
Naphthalene	ND		ug/m3	2.0	1
C5-C8 Aliphatics, Adjusted	ND		ug/m3	12	1
C9-C12 Aliphatics, Adjusted	ND		ug/m3	14	1
C9-C10 Aromatics	ND		ug/m3	10	1

Project Name:	UNIFIRST PROPERTY IA / VI	**Lab Number:**	L1004721
Project Number:	1-2114-2	**Report Date:**	04/10/10

SAMPLE RESULTS

Lab ID:	L1004721-20	Date Collected:	04/02/10 00:00
Client ID:	CAN 695 FC 290	Date Received:	04/03/10
Sample Location:	WOBURN, MA	Field Prep:	Not Specified
Matrix:	Air		
Analytical Method:	96,APH		
Analytical Date:	04/06/10 20:48		
Analyst:	RY		

Quality Control Information

Sample Type:	10 ml/min Composite
Sample Container Type:	Canister - 6 Liter
Sampling Flow Controller:	Mechanical
Sampling Zone:	Unknown
Sampling Flow Meter RPD of pre & post-sampling calibration check:	<=20%
Were all QA/QC procedures REQUIRED by the method followed?	Yes
Were all performance/acceptance standards for the required procedures achieved?	Yes
Were significant modifications made to the method as specified in Sect 11.1.2?	No

Parameter	Result	Qualifier	Units	RDL	Dilution Factor
Petroleum Hydrocarbons in Air - Mansfield Lab					
1,3-Butadiene	ND		ug/m3	2.0	1
Methyl tert butyl ether	ND		ug/m3	2.0	1
Benzene	ND		ug/m3	2.0	1
Toluene	ND		ug/m3	2.0	1
Ethylbenzene	ND		ug/m3	2.0	1
p/m-Xylene	ND		ug/m3	4.0	1
o-Xylene	ND		ug/m3	2.0	1
Naphthalene	ND		ug/m3	2.0	1
C5-C8 Aliphatics, Adjusted	ND		ug/m3	12	1
C9-C12 Aliphatics, Adjusted	ND		ug/m3	14	1
C9-C10 Aromatics	ND		ug/m3	10	1

Project Name:	UNIFIRST PROPERTY IA / VI	**Lab Number:**	L1004721
Project Number:	1-2114-2	**Report Date:**	04/10/10

SAMPLE RESULTS

Lab ID:	L1004721-21	Date Collected:	04/02/10 00:00
Client ID:	CAN 609 FC 183	Date Received:	04/03/10
Sample Location:	WOBURN, MA	Field Prep:	Not Specified
Matrix:	Air		
Analytical Method:	96,APH		
Analytical Date:	04/06/10 21:23		
Analyst:	RY		

Quality Control Information

Sample Type:	10 ml/min Composite
Sample Container Type:	Canister - 6 Liter
Sampling Flow Controller:	Mechanical
Sampling Zone:	Unknown
Sampling Flow Meter RPD of pre & post-sampling calibration check:	<=20%
Were all QA/QC procedures REQUIRED by the method followed?	Yes
Were all performance/acceptance standards for the required procedures achieved?	Yes
Were significant modifications made to the method as specified in Sect 11.1.2?	No

Parameter	Result	Qualifier	Units	RDL	Dilution Factor
Petroleum Hydrocarbons in Air - Mansfield Lab					
1,3-Butadiene	ND		ug/m3	2.0	1
Methyl tert butyl ether	ND		ug/m3	2.0	1
Benzene	ND		ug/m3	2.0	1
Toluene	ND		ug/m3	2.0	1
Ethylbenzene	ND		ug/m3	2.0	1
p/m-Xylene	ND		ug/m3	4.0	1
o-Xylene	ND		ug/m3	2.0	1
Naphthalene	ND		ug/m3	2.0	1
C5-C8 Aliphatics, Adjusted	ND		ug/m3	12	1
C9-C12 Aliphatics, Adjusted	ND		ug/m3	14	1
C9-C10 Aromatics	ND		ug/m3	10	1

Project Name:	UNIFIRST PROPERTY IA / VI	**Lab Number:**	L1004721
Project Number:	1-2114-2	**Report Date:**	04/10/10

SAMPLE RESULTS

Lab ID:	L1004721-22	Date Collected:	04/02/10 00:00
Client ID:	CAN 1676 FC 205	Date Received:	04/03/10
Sample Location:	WOBURN, MA	Field Prep:	Not Specified
Matrix:	Air		
Analytical Method:	96,APH		
Analytical Date:	04/06/10 21:56		
Analyst:	RY		

Quality Control Information

Sample Type:	10 ml/min Composite
Sample Container Type:	Canister - 6 Liter
Sampling Flow Controller:	Mechanical
Sampling Zone:	Unknown
Sampling Flow Meter RPD of pre & post-sampling calibration check:	<=20%
Were all QA/QC procedures REQUIRED by the method followed?	Yes
Were all performance/acceptance standards for the required procedures achieved?	Yes
Were significant modifications made to the method as specified in Sect 11.1.2?	No

Parameter	Result	Qualifier	Units	RDL	Dilution Factor
Petroleum Hydrocarbons in Air - Mansfield Lab					
1,3-Butadiene	ND		ug/m3	2.0	1
Methyl tert butyl ether	ND		ug/m3	2.0	1
Benzene	ND		ug/m3	2.0	1
Toluene	ND		ug/m3	2.0	1
Ethylbenzene	ND		ug/m3	2.0	1
p/m-Xylene	ND		ug/m3	4.0	1
o-Xylene	ND		ug/m3	2.0	1
Naphthalene	ND		ug/m3	2.0	1
C5-C8 Aliphatics, Adjusted	ND		ug/m3	12	1
C9-C12 Aliphatics, Adjusted	ND		ug/m3	14	1
C9-C10 Aromatics	ND		ug/m3	10	1

Project Name:	UNIFIRST PROPERTY IA / VI	**Lab Number:**	L1004721
Project Number:	1-2114-2	**Report Date:**	04/10/10

SAMPLE RESULTS

Lab ID:	L1004721-23	Date Collected:	04/02/10 00:00
Client ID:	CAN 986 FC 406	Date Received:	04/03/10
Sample Location:	WOBURN, MA	Field Prep:	Not Specified
Matrix:	Air		
Analytical Method:	96,APH		
Analytical Date:	04/06/10 22:31		
Analyst:	RY		

Quality Control Information

Sample Type:	10 ml/min Composite
Sample Container Type:	Canister - 6 Liter
Sampling Flow Controller:	Mechanical
Sampling Zone:	Unknown
Sampling Flow Meter RPD of pre & post-sampling calibration check:	<=20%
Were all QA/QC procedures REQUIRED by the method followed?	Yes
Were all performance/acceptance standards for the required procedures achieved?	Yes
Were significant modifications made to the method as specified in Sect 11.1.2?	No

Parameter	Result	Qualifier	Units	RDL	Dilution Factor
Petroleum Hydrocarbons in Air - Mansfield Lab					
1,3-Butadiene	ND		ug/m3	2.0	1
Methyl tert butyl ether	ND		ug/m3	2.0	1
Benzene	ND		ug/m3	2.0	1
Toluene	ND		ug/m3	2.0	1
Ethylbenzene	ND		ug/m3	2.0	1
p/m-Xylene	ND		ug/m3	4.0	1
o-Xylene	ND		ug/m3	2.0	1
Naphthalene	ND		ug/m3	2.0	1
C5-C8 Aliphatics, Adjusted	ND		ug/m3	12	1
C9-C12 Aliphatics, Adjusted	ND		ug/m3	14	1
C9-C10 Aromatics	ND		ug/m3	10	1

Project Name:	UNIFIRST PROPERTY IA / VI	**Lab Number:**	L1004721
Project Number:	1-2114-2	**Report Date:**	04/10/10

SAMPLE RESULTS

Lab ID:	L1004721-24	Date Collected:	04/02/10 00:00
Client ID:	CAN 1704 FC 369	Date Received:	04/03/10
Sample Location:	WOBURN, MA	Field Prep:	Not Specified
Matrix:	Air		
Analytical Method:	96,APH		
Analytical Date:	04/06/10 23:06		
Analyst:	RY		

Quality Control Information

Sample Type:	10 ml/min Composite
Sample Container Type:	Canister - 6 Liter
Sampling Flow Controller:	Mechanical
Sampling Zone:	Unknown
Sampling Flow Meter RPD of pre & post-sampling calibration check:	<=20%
Were all QA/QC procedures REQUIRED by the method followed?	Yes
Were all performance/acceptance standards for the required procedures achieved?	Yes
Were significant modifications made to the method as specified in Sect 11.1.2?	No

Parameter	Result	Qualifier	Units	RDL	Dilution Factor
Petroleum Hydrocarbons in Air - Mansfield Lab					
1,3-Butadiene	ND		ug/m3	2.0	1
Methyl tert butyl ether	ND		ug/m3	2.0	1
Benzene	ND		ug/m3	2.0	1
Toluene	ND		ug/m3	2.0	1
Ethylbenzene	ND		ug/m3	2.0	1
p/m-Xylene	ND		ug/m3	4.0	1
o-Xylene	ND		ug/m3	2.0	1
Naphthalene	ND		ug/m3	2.0	1
C5-C8 Aliphatics, Adjusted	ND		ug/m3	12	1
C9-C12 Aliphatics, Adjusted	ND		ug/m3	14	1
C9-C10 Aromatics	ND		ug/m3	10	1

Project Name:	UNIFIRST PROPERTY IA / VI	**Lab Number:**	L1004721
Project Number:	1-2114-2	**Report Date:**	04/10/10

SAMPLE RESULTS

Lab ID:	L1004721-25	Date Collected:	04/02/10 00:00
Client ID:	CAN 949 FC 242	Date Received:	04/03/10
Sample Location:	WOBURN, MA	Field Prep:	Not Specified
Matrix:	Air		
Analytical Method:	96,APH		
Analytical Date:	04/06/10 23:43		
Analyst:	RY		

Quality Control Information

Sample Type:	10 ml/min Composite
Sample Container Type:	Canister - 6 Liter
Sampling Flow Controller:	Mechanical
Sampling Zone:	Unknown
Sampling Flow Meter RPD of pre & post-sampling calibration check:	<=20%
Were all QA/QC procedures REQUIRED by the method followed?	Yes
Were all performance/acceptance standards for the required procedures achieved?	Yes
Were significant modifications made to the method as specified in Sect 11.1.2?	No

Parameter	Result	Qualifier	Units	RDL	Dilution Factor
Petroleum Hydrocarbons in Air - Mansfield Lab					
1,3-Butadiene	ND		ug/m3	2.0	1
Methyl tert butyl ether	ND		ug/m3	2.0	1
Benzene	ND		ug/m3	2.0	1
Toluene	ND		ug/m3	2.0	1
Ethylbenzene	ND		ug/m3	2.0	1
p/m-Xylene	ND		ug/m3	4.0	1
o-Xylene	ND		ug/m3	2.0	1
Naphthalene	ND		ug/m3	2.0	1
C5-C8 Aliphatics, Adjusted	ND		ug/m3	12	1
C9-C12 Aliphatics, Adjusted	ND		ug/m3	14	1
C9-C10 Aromatics	ND		ug/m3	10	1

Project Name: UNIFIRST PROPERTY IA / VI **Lab Number:** L1004721
Project Number: 1-2114-2 **Report Date:** 04/10/10

Method Blank Analysis
Batch Quality Control

Analytical Method: 96,APH
Analytical Date: 04/05/10 17:49
Analyst: RY

Parameter	Result	Qualifier	Units	RDL
Petroleum Hydrocarbons in Air - Mansfield Lab for sample(s): 01,03-13 Batch: WG407080-4				
1,3-Butadiene	ND		ug/m3	2.0
Methyl tert butyl ether	ND		ug/m3	2.0
Benzene	ND		ug/m3	2.0
Toluene	ND		ug/m3	2.0
Ethylbenzene	ND		ug/m3	2.0
p/m-Xylene	ND		ug/m3	4.0
o-Xylene	ND		ug/m3	2.0
Naphthalene	ND		ug/m3	2.0
C5-C8 Aliphatics, Adjusted	ND		ug/m3	12
C9-C12 Aliphatics, Adjusted	ND		ug/m3	14
C9-C10 Aromatics	ND		ug/m3	10

Project Name: UNIFIRST PROPERTY IA / VI **Lab Number:** L1004721

Project Number: 1-2114-2 **Report Date:** 04/10/10

Method Blank Analysis
Batch Quality Control

Analytical Method: 96,APH
Analytical Date: 04/06/10 16:42
Analyst: RY

Parameter	Result	Qualifier	Units	RDL
Petroleum Hydrocarbons in Air - Mansfield Lab for sample(s): 14-25 Batch: WG407083-4				
1,3-Butadiene	ND		ug/m3	2.0
Methyl tert butyl ether	ND		ug/m3	2.0
Benzene	ND		ug/m3	2.0
Toluene	ND		ug/m3	2.0
Ethylbenzene	ND		ug/m3	2.0
p/m-Xylene	ND		ug/m3	4.0
o-Xylene	ND		ug/m3	2.0
Naphthalene	ND		ug/m3	2.0
C5-C8 Aliphatics, Adjusted	ND		ug/m3	12
C9-C12 Aliphatics, Adjusted	ND		ug/m3	14
C9-C10 Aromatics	ND		ug/m3	10

Lab Control Sample Analysis
Batch Quality Control

Project Name: UNIFIRST PROPERTY IA / VI
Project Number: 1-2114-2

Lab Number: L1004721
Report Date: 04/10/10

Parameter	LCS %Recovery	Qual	LCSD %Recovery	Qual	%Recovery Limits	RPD	Qual	RPD Limits
Petroleum Hydrocarbons in Air - Mansfield Lab Associated sample(s): 01,03-13 Batch: WG407080-3								
1,3-Butadiene	80		-		70-130	-		
Methyl tert butyl ether	130		-		70-130	-		
Benzene	112		-		70-130	-		
Toluene	127		-		70-130	-		
Ethylbenzene	132	Q	-		70-130	-		
p/m-Xylene	130		-		70-130	-		
o-Xylene	131	Q	-		70-130	-		
Naphthalene	138		-		50-150	-		
C5-C8 Aliphatics, Adjusted	103		-		70-130	-		
C9-C12 Aliphatics, Adjusted	128		-		70-130	-		
C9-C10 Aromatics	113		-		70-130	-		

Lab Control Sample Analysis
Batch Quality Control

Project Name: UNIFIRST PROPERTY IA / VI
Project Number: 1-2114-2

Lab Number: L1004721
Report Date: 04/10/10

Parameter	LCS %Recovery	Qual	LCSD %Recovery	Qual	%Recovery Limits	RPD	Qual	RPD Limits
Petroleum Hydrocarbons in Air - Mansfield Lab Associated sample(s): 14-25 Batch: WG407083-3								
1,3-Butadiene	89		-		70-130	-		
Methyl tert butyl ether	94		-		70-130	-		
Benzene	90		-		70-130	-		
Toluene	92		-		70-130	-		
Ethylbenzene	92		-		70-130	-		
p/m-Xylene	90		-		70-130	-		
o-Xylene	92		-		70-130	-		
Naphthalene	107		-		50-150	-		
C5-C8 Aliphatics, Adjusted	86		-		70-130	-		
C9-C12 Aliphatics, Adjusted	101		-		70-130	-		
C9-C10 Aromatics	82		-		70-130	-		

Project Name: UNIFIRST PROPERTY IA / VI
Project Number: 1-2114-2

Lab Number: L1004721
Report Date: 04/10/10

Sample Receipt and Container Information

Were project specific reporting limits specified? YES

Cooler Information

Cooler	Custody Seal
NA	Absent

Container Information

Container ID	Container Type	Cooler	pH	Temp deg C	Pres	Seal	Analysis
L1004721-01A	Canister - 6 Liter	NA	NA	NA	NA	Absent	APH-10(30),TO15-SIM(30)
L1004721-03A	Canister - 6 Liter	NA	NA	NA	NA	Absent	APH-10(30),TO15-SIM(30)
L1004721-04A	Canister - 6 Liter	NA	NA	NA	NA	Absent	APH-10(30),TO15-SIM(30)
L1004721-05A	Canister - 6 Liter	NA	NA	NA	NA	Absent	APH-10(30),TO15-SIM(30)
L1004721-06A	Canister - 6 Liter	NA	NA	NA	NA	Absent	APH-10(30),TO15-SIM(30)
L1004721-07A	Canister - 6 Liter	NA	NA	NA	NA	Absent	APH-10(30),TO15-SIM(30)
L1004721-08A	Canister - 6 Liter	NA	NA	NA	NA	Absent	APH-10(30),TO15-SIM(30)
L1004721-09A	Canister - 6 Liter	NA	NA	NA	NA	Absent	APH-10(30),TO15-SIM(30)
L1004721-10A	Canister - 6 Liter	NA	NA	NA	NA	Absent	APH-10(30),TO15-SIM(30)
L1004721-11A	Canister - 6 Liter	NA	NA	NA	NA	Absent	APH-10(30),TO15-SIM(30)
L1004721-12A	Canister - 6 Liter	NA	NA	NA	NA	Absent	APH-10(30),TO15-SIM(30)
L1004721-13A	Canister - 6 Liter	NA	NA	NA	NA	Absent	APH-10(30),TO15-SIM(30)
L1004721-14A	Canister - 6 Liter	NA	NA	NA	NA	Absent	APH-10(30),TO15-SIM(30)
L1004721-15A	Canister - 6 Liter	NA	NA	NA	NA	Absent	APH-10(30),TO15-SIM(30)
L1004721-16A	Canister - 6 Liter	NA	NA	NA	NA	Absent	APH-10(30),TO15-SIM(30)
L1004721-17A	Canister - 6 Liter	NA	NA	NA	NA	Absent	APH-10(30),TO15-SIM(30)
L1004721-18A	Canister - 6 Liter	NA	NA	NA	NA	Absent	APH-10(30),TO15-SIM(30)
L1004721-19A	Canister - 6 Liter	NA	NA	NA	NA	Absent	APH-10(30),TO15-SIM(30)
L1004721-20A	Canister - 6 Liter	NA	NA	NA	NA	Absent	APH-10(30),TO15-SIM(30)
L1004721-21A	Canister - 6 Liter	NA	NA	NA	NA	Absent	APH-10(30),TO15-SIM(30)
L1004721-22A	Canister - 6 Liter	NA	NA	NA	NA	Absent	APH-10(30),TO15-SIM(30)
L1004721-23A	Canister - 6 Liter	NA	NA	NA	NA	Absent	APH-10(30),TO15-SIM(30)
L1004721-24A	Canister - 6 Liter	NA	NA	NA	NA	Absent	APH-10(30),TO15-SIM(30)
L1004721-25A	Canister - 6 Liter	NA	NA	NA	NA	Absent	APH-10(30),TO15-SIM(30)

*Hold days indicated by values in parentheses

Project Name:	UNIFIRST PROPERTY IA / VI	**Lab Number:**	L1004721
Project Number:	1-2114-2	**Report Date:**	04/10/10

GLOSSARY

Acronyms

EPA · Environmental Protection Agency.

LCS · Laboratory Control Sample: A sample matrix, free from the analytes of interest, spiked with verified known amounts of analytes or a material containing known and verified amounts of analytes.

LCSD · Laboratory Control Sample Duplicate: Refer to LCS.

MS · Matrix Spike Sample: A sample prepared by adding a known mass of target analyte to a specified amount of matrix sample for which an independent estimate of target analyte concentration is available.

MSD · Matrix Spike Sample Duplicate: Refer to MS.

NA · Not Applicable.

NC · Not Calculated: Term is utilized when one or more of the results utilized in the calculation are non-detect at the parameter's reporting unit.

NI · Not Ignitable.

RDL · Reported Detection Limit: The value at which an instrument can accurately measure an analyte at a specific concentration. The RDL includes any adjustments from dilutions, concentrations or moisture content, where applicable.

RPD · Relative Percent Difference: The results from matrix and/or matrix spike duplicates are primarily designed to assess the precision of analytical results in a given matrix and are expressed as relative percent difference (RPD). Values which are less than five times the reporting limit for any individual parameter are evaluated by utilizing the absolute difference between the values; although the RPD value will be provided in the report.

Terms

Analytical Method: Both the document from which the method originates and the analytical reference method. (Example: EPA 8260B is shown as 1,8260B.) The codes for the reference method documents are provided in the References section of the Addendum.

Data Qualifiers

A · Spectra identified as "Aldol Condensation Product".

B · The analyte was detected above the reporting limit in the associated method blank. Flag only applies to associated field samples that have detectable concentrations of the analyte at less than five times (5x) the concentration found in the blank. For DOD-related projects, flag only applies to associated field samples that have detectable concentrations of the analyte at less than ten times (10x) the concentration found in the blank AND the analyte was detected above one-half the reporting limit (or above the reporting limit for common lab contaminants) in the associated method blank.

D · Concentration of analyte was quantified from diluted analysis. Flag only applies to field samples that have detectable concentrations of the analyte.

E · Concentration of analyte exceeds the range of the calibration curve and/or linear range of the instrument.

H · The analysis of pH was performed beyond the regulatory-required holding time of 15 minutes from the time of sample collection.

P · The RPD between the results for the two columns exceeds the method-specified criteria.

Q · The quality control sample exceeds the associated acceptance criteria. Note: This flag is not applicable for matrix spike recoveries when the sample concentration is greater than 4x the spike added or for batch duplicate RPD when the sample concentrations are less than 5x the RDL. (Metals only.)

R · Analytical results are from sample re-analysis.

RE · Analytical results are from sample re-extraction.

J · Estimated value. The Target analyte concentration is below the quantitation limit (RDL), but above one half the RDL. This represents an estimated concentration for Tentatively Identified Compounds (TICs).

ND · Not detected at one half the reported detection limit (RDL) for the sample.

Report Format: DU "J" Qualify to 1/2 the RDL

Project Name:	UNIFIRST PROPERTY IA / VI	**Lab Number:**	L1004721
Project Number:	1-2114-2	**Report Date:**	04/10/10

REFERENCES

48 Compendium of Methods for the Determination of Toxic Organic Compounds in Ambient Air. Second Edition. EPA/625/R-96/010b, January 1999.

96 Method for the Determination of Air-Phase Petroleum Hydrocarbons (APH), Massachusetts Department of Environmental Protection (MassDEP), December 2009, Revision 1.

LIMITATION OF LIABILITIES

Alpha Analytical performs services with reasonable care and diligence normal to the analytical testing laboratory industry. In the event of an error, the sole and exclusive responsibility of Alpha Woods Hole Labs shall be to re-perform the work at it's own expense. In no event shall Alpha Analytical be held liable for any incidental, consequential or special damages, including but not limited to, damages in any way connected with the use of, interpretation of, information or analysis provided by Alpha Woods Hole Labs.

We strongly urge our clients to comply with EPA protocol regarding sample volume, preservation, cooling, containers, sampling procedures, holding time and splitting of samples in the field.

Certificate/Approval Program Summary

Last revised December 15, 2009 – Mansfield Facility

The following list includes only those analytes/methods for which certification/approval is currently held.
For a complete listing of analytes for the referenced methods, please contact your Alpha Customer Service Representative.

Connecticut Department of Public Health Certificate/Lab ID: PH-0141.

Wastewater/Non-Potable Water (Inorganic Parameters: pH, Turbidity, Conductivity, Alkalinity, Aluminum, Antimony, Arsenic, Barium, Beryllium, Boron, Cadmium, Calcium, Chromium, Cobalt, Copper, Iron, Lead, Magnesium, Manganese, Mercury, Molybdenum, Nickel, Potassium, Selenium, Silver, Sodium, Strontium, Thallium, Tin, Vanadium, Zinc, Total Residue (Solids), Total Suspended Solids (non-filterable), Total Cyanide. Organic Parameters: PCBs, Organochlorine Pesticides, Technical Chlordane, Toxaphene, Acid Extractables, Benzidines, Phthalate Esters, Nitrosamines, Nitroaromatics & Isophorone, PAHs, Haloethers, Chlorinated Hydrocarbons, Volatile Organics.)

Solid Waste/Soil (Inorganic Parameters: pH, Aluminum, Antimony, Arsenic, Barium, Beryllium, Cadmium, Calcium, Chromium, Hexavalent Chromium, Cobalt, Copper, Iron, Lead, Magnesium, Manganese, Mercury, Molybdenum, Nickel, Potassium, Selenium, Silver, Sodium, Thallium, Vanadium, Zinc, Total Organic Carbon, Total Cyanide, Corrosivity, TCLP 1311. Organic Parameters: PCBs, Organochlorine Pesticides, Technical Chlordane, Toxaphene, Volatile Organics, Acid Extractables, Benzidines, Phthalates, Nitrosamines, Nitroaromatics & Cyclic Ketones, PAHs, Haloethers, Chlorinated Hydrocarbons.)

Florida Department of Health Certificate/Lab ID: E87814. ***NELAP Accredited.***

Non-Potable Water (Inorganic Parameters: SM2320B, EPA 120.1, SM2510B, EPA 245.1, EPA 150.1, EPA 160.2, SM2540D, EPA 335.2, SM2540G, EPA 180.1. Organic Parameters: EPA 625, 608.)

Solid & Chemical Materials (Inorganic Parameters: 6020, 7470, 7471, 9045, 9014. Organic Parameters: EPA 8260, 8270, 8082, 8081.)

Air & Emissions (EPA TO-15.)

Louisiana Department of Environmental Quality Certificate/Lab ID: 03090. ***NELAP Accredited.***

Non-Potable Water (Inorganic Parameters: EPA 120.1, 150.1, 160.2, 180.1, 200.8, 245.1, 310.1, 335.2, 608, 625, 1631, 3010, 3015, 3020, 6020, 9010, 9014, 9040, SM2320B, 2510B, 2540D, 2540G, 4500CN-E, 4500H-B, Organic Parameters: EPA 3510, 3580, 3630, 3640, 3660, 3665, 5030, 8015 (mod), 3570, 8081, 8082, 8260, 8270,)

Solid & Chemical Materials (Inorganic Parameters: 6020, 7196, 7470, 7471, 7474, 9010, 9014, 9040, 9045, 9060. Organic Parameters: EPA 8015 (mod), EPA 3570, 1311, 3050, 3051, 3060, 3580, 3630, 3640, 3660, 3665, 5035, 8081, 8082, 8260, 8270.)

Biological Tissue (Inorganic Parameters: EPA 6020. Organic Parameters: EPA 3570, 3510, 3610, 3630, 3640, 8270.)

Maine Department of Human Services Certificate/Lab ID: MA0030.

Wastewater (Inorganic Parameters: EPA 120.1, 300.0, SM 2320, 2510B, 2540C, 2540D, EPA 245.1. Organic Parameters: 608, 624.)

Massachusetts Department of Environmental Protection Certificate/Lab ID: M-MA030.

Non-Potable Water (Inorganic Parameters: SM4500H+B. Organic Parameters: EPA 624.)

New Hampshire Department of Environmental Services Certificate/Lab ID: 2206. ***NELAP Accredited.***

Non-Potable Water (Inorganic Parameters: EPA 200.8, 245.1, 1631E, 120.1, 150.1, 180.1, 310.1, 335.2, 160.2, SM2540D, 2540G, 4500CN-E, 4500H+B, 2320B, 2510B. Organic Parameters: EPA 625, 608.)

New Jersey Department of Environmental Protection Certificate/Lab ID: MA015. ***NELAP Accredited.***

Non-Potable Water (Inorganic Parameters: SW-846 1312, 3010, 3020A, 3015, 6020, SM2320B, EPA 200.8, SM2540C, 2540D, 2540G, EPA 120.1, SM2510B, EPA 180.1, 245.1, 1631E, SW-846 9040B, 6020, 9010B, 9014 Organic Parameters: EPA 608, 625, SW-846 3510C, 3580A, 5030B, 3035L, 5035H, 3630C, 3640A, 3660B, 3665A, 8081A, 8082 8260B, 8270C)

Solid & Chemical Materials (Inorganic Parameters: SW-846 6020, 9010B, 9014, 1311, 1312, 3050B, 3051, 3060A, 7196A, 7470A, 7471A, 9045C, 9060. Organic Parameters: SW-846 3580A, 5030B, 3035L, 5035H, 3630C, 3640A, 3660B, 3665A, 8081A, 8082, 8260B, 8270C, 3570, 8015B.)

Atmospheric Organic Parameters (EPA TO-15)

Biological Tissue (Inorganic Parameters: SW-846 6020 Organic Parameters: SW-846 8270C, 3510C, 3570, 3610B, 3630C, 3640A)

New York Department of Health Certificate/Lab ID: 11627. ***NELAP Accredited.***

Non-Potable Water (Inorganic Parameters: EPA 310.1, SM2320B, EPA 365.2, 160.1, EPA 160.2, SM2540D, EPA 200.8, 6020, 1631E, 245.1, 335.2, 9014, 150.1, 9040B, 120.1, SM2510B, EPA 376.2, 180.1, 9010B. Organic Parameters: EPA 624, 8260B, 8270C, 608, 8081A, 625, 8082, 3510C, 3511, 5030B.)

Solid & Hazardous Waste (Inorganic Parameters: EPA 9040B, 9045C, SW-846 Ch7 Sec 7.3, EPA 6020, 7196A, 7471A, 7474, 9014, 9040B, 9045C, 9010B. Organic Parameters: EPA 8260B, 8270C, 8081A, DRO 8015B, 8082, 1311, 3050B, 3580, 3050B, 3035, 3570, 3051, 5035, 5030B.)

Air & Emissions (EPA TO-15.)

Pennsylvania Department of Environmental Protection Certificate/Lab ID: 68-02089. ***NELAP Accredited.***

Non-Potable Water (Organic Parameters: EPA 5030B, EPA 8260)

Rhode Island Department of Health Certificate/Lab ID: LAO00299. ***NELAP Accredited via LA-DEQ.***

Refer to MA-DEP Certificate for Non-Potable Water.

Refer to LA-DEQ Certificate for Non-Potable Water.

Texas Commission of Environmental Quality Certificate/Lab ID: T104704419-08-TX. ***NELAP Accredited.***

Solid & Chemical Materials (Inorganic Parameters: EPA 6020, 7470, 7471, 1311, 7196, 9014, 9040, 9045, 9060. Organic Parameters: EPA 8015, 8270, 8260, 8081, 8082.)

U.S. Army Corps of Engineers

Department of Defense Certificate/Lab ID: L2217.01.

Non-Potable Water (Inorganic Parameters: EPA 3005A,3020, 6020, 245.1, 245.7, 1631E, 7470A, 7474, 9014, 120.1, 9050A, 180.1, SM4500H-B, 2320B, 2510B, 2540D,9040. Organic Parameters: EPA 3510C, 5030B, 9010B, 624, 8260B, 8270C, 8270 Alk-PAH, 8082, 8081A, 8015 (SHC), 8015 (DRO).)

Solid & Hazardous Waste (Inorganic Parameters: EPA 1311, 1312,3051, 6020, 747A, 7474, 9045C,9060, SM 2540G, ASTM D422-63. Organic Parameters: EPA 3580, 3570, 3540C, 5035, 8260B, 8270C, 8270 Alk-PAH, 8082, 8081A, 8015 (SHC), 8015 (DRO).

Air & Emissions (EPA TO-15.)

Analytes Not Accredited by NELAP
Certification is not available by NELAP for the following analytes: **8270C:** Biphenyl.

AIR ANALYSIS

PAGE 1 OF 3

CHAIN OF CUSTODY

ALPHA ANALYTICAL
320 Forbes Blvd, Mansfield, MA 02048
TEL: 508-822-9300 FAX: 508-822-3288

04101021:32

Client Information

Client: Johnson Company
Address:
Phone:
Fax:
Email:
☐ These samples have been previously analyzed by Alpha

Project Information

Project Name: Unifirst/Wells G&H
Project Location:
Project #:
Project Manager: Bob Osborne
ALPHA Quote #:

Turn-Around Time

☐ Standard ☐ RUSH (only confirmed if pre-approved)
Date Due: Time:

Date Rec'd in Lab:

Report Information - Data Deliverables

☐ FAX
☐ ADEx
Criteria Checker:
(Default based on Regulatory Criteria Indicated)
Other Formats:
☐ EMAIL (standard pdf report)
☐ Additional Deliverables:
Report to: (if different than Project Manager)

ALPHA Job #: L1004721

Billing Information

☐ Same as Client info PO #:

Regulatory Requirements/Report Limits

State/Fed	Program	Criteria

Other Project Specific Requirements/Comments:

All Columns Below Must Be Filled Out

ANALYSIS

ALPHA Lab ID (Lab Use Only)	Sample ID	Collection Date	Start Time	End Time	Initial Vacuum	Final Vacuum	Sample Matrix*	Sampler's Initials	Can Size	I D Can	I D - Flow Controller	TO-14A by TO-15	TO-15	TO-15 SIM	APH	FIXED GASES	TO-13A	TO-4/TO-10	Sample Comments (i.e. PID)
1004721-01	Can 785 FC 298	4/2/10					AA							SS					
~~-02~~	~~Can 923 FC 432~~															(LB)	4/8/10		
-03	Can 1559 FC 074																		
-04	Can 945 FC 256																		
-05	Can 762 FC 233																		
-06	Can 1707 FC 356																		
-07	Can 983 FC 349																		
-08	Can 618 FC 047																		
-09	Can 1467 FC 379																		
-10	Can 584 FC 081																		

*SAMPLE MATRIX CODES
AA = Ambient Air (Indoor/Outdoor)
SV = Soil Vapor/Landfill Gas/SVE
Other = Please Specify

Container Type

Relinquished By:	Date/Time	Received By:	Date/Time:
Ric Bu	4/10/10		

Please print clearly, legibly and completely. Samples can not be logged in and turnaround time clock will not start until any ambiguities are resolved. All samples submitted are subject to Alpha's Terms and Conditions. See reverse side.

Form No: 101-02 (19-Jun-09)

AIR ANALYSIS

PAGE 2 OF 3

ALPHA ANALYTICAL

CHAIN OF CUSTODY

320 Forbes Blvd, Mansfield, MA 02048
TEL: 508-822-9300 FAX: 508-822-3288

Date Rec'd in Lab:

ALPHA Job #: L1004721

Client Information

Client: Johnson Company

Address:

Phone:

Fax:

Email:

☐ These samples have been previously analyzed by Alpha

Project Information

Project Name: Unifirst / Wells 6th

Project Location:

Project #:

Project Manager:

ALPHA Quote #:

Turn-Around Time

☐ Standard ☐ RUSH (only confirmed if pre-approved)

Date Due: Time:

Report Information - Data Deliverables

☐ FAX
☐ ADEx
Criteria Checker:
(Default based on Regulatory Criteria Indicated)
Other Formats:
☐ EMAIL (standard pdf report)
☐ Additional Deliverables:

Report to: (if different than Project Manager)

Billing Information

☐ Same as Client info PO #:

Regulatory Requirements/Report Limits

State/Fed	Program	Criteria

Other Project Specific Requirements/Comments:

All Columns Below Must Be Filled Out

ANALYSIS

ALPHA Lab ID (Lab Use Only)	Sample ID	Collection Date	Start Time	End Time	Initial Vacuum	Final Vacuum	Sample Matrix*	Sampler's Initials	Can Size	ID Can	ID - Flow Controller	TO-14A by TO-15	TO-15	TO-15 SIM	APH	FIXED GASES	TO-13A	TO-4 / TO-10	Sample Comments (i.e. PID)
1004721-11	Con 1036 FC 333	4/2/10					AA							X	X				
-12	Con 782 FC 175	↓					↓												
-13	Con 1628 FC 360	4/1/10					SU												
-14	Con 972 FC 222	4/6/10					AA												
-15	Con 1690 FC 028																		
-16	Con 1614 FC 309																		
-17	Con 639 FC 231																		
-18	Con 1566 FC 262																		
-19	Con 1626 FC 002																		
-20	Con 695 FC 290																		

*SAMPLE MATRIX CODES
AA = Ambient Air (Indoor/Outdoor)
SV = Soil Vapor/Landfill Gas/SVE
Other = Please Specify

Container Type

Relinquished By:	Date/Time	Received By:	Date/Time:
Lin Bure	4/6/10		

Please print clearly, legibly and completely. Samples can not be logged in and turnaround time clock will not start until any ambiguities are resolved. All samples submitted are subject to Alpha's Terms and Conditions. See reverse side.

Form No: 101-02 (19-Jun-09)

04101021:32

AIR ANALYSIS

PAGE 3 OF 3

ALPHA ANALYTICAL

CHAIN OF CUSTODY

320 Forbes Blvd, Mansfield, MA 02048
TEL: 508-822-9300 FAX: 508-822-3288

Date Rec'd in Lab:

ALPHA Job #: 1004721

Client Information

Client: Johnson Company

Address:

Phone:

Fax:

Email:

☐ These samples have been previously analyzed by Alpha

Project Information

Project Name: Unifirst / Wells G & H

Project Location:

Project #:

Project Manager: Bob Osborne

ALPHA Quote #:

Turn-Around Time

☐ Standard ☐ RUSH (only confirmed if pre-approved!)

Date Due: Time:

Report Information - Data Deliverables

☐ FAX
☐ ADEx
Criteria Checker: _____
(Default based on Regulatory Criteria Indicated)
Other Formats: _____
☐ EMAIL (standard pdf report)
☐ Additional Deliverables: _____

Report to: (if different than Project Manager)

Billing Information

☐ Same as Client info PO #:

Regulatory Requirements/Report Limits

State/Fed	Program	Criteria

Other Project Specific Requirements/Comments:

All Columns Below Must Be Filled Out

ALPHA Lab ID (Lab Use Only)	Sample ID	Collection Date	Start Time	End Time	Initial Vacuum	Final Vacuum	Sample Matrix*	Sampler's Initials	Can Size	I D Can	I D - Flow Controller	TO-14A by TO-15	TO-15	TO-15 SIM	APH	FIXED GASES	TO-13A	TO-4/TO-10	Sample Comments (i.e. PID)
1004721-21	Can 609 FC 183	4/6/10					AA							✓	✓				
-22	Can 1676 FC 205	↓					↓							↓	↓				
-23	Can 986 FC 406	↓					↓							↓	↓				
-24	Can 1704 FC 369	↓					↓							↓	↓				
-25	Can 949 FC 242	↓					↓							↓	↓				

*SAMPLE MATRIX CODES
AA = Ambient Air (Indoor/Outdoor)
SV = Soil Vapor/Landfill Gas/SVE
Other = Please Specify

Container Type

Relinquished By:	Date/Time	Received By:	Date/Time:
Kim BMV	4/6/10		

Please print clearly, legibly and completely. Samples can not be logged in and turnaround time clock will not start until any ambiguities are resolved. All samples submitted are subject to Alpha's Terms and Conditions. See reverse side.

Form No: 101-02 (10-Jun-09)

04101021:32

APPENDIX B

FIELD ACTIVITIES QUALITY ASSURANCE REVIEW

Sampling Performed by:	**Quality Assurance Review by:**
The Johnson Company **100 State Street, Suite 600** **Montpelier, VT 05602**	**Phoenix Chemistry Services** **126 Covered Bridge Rd.** **N. Ferrisburg, VT 05473**

Phoenix Chemistry Services (Phoenix) has completed the review of the documentation for the field activities in support of the indoor air quality and vapor intrusion (IAQA/VI) assessment at the UniFirst Property in Woburn, MA. These activities were conducted in February, March, and April 2010 and included the following: two building inspections, installation of fifteen (15) sub-slab vapor sampling points, and collection of nineteen (19) indoor air samples, seventeen (17) sub-slab vapor samples, four (4) outdoor air samples, and one (1) trip blank (TB) sample for analysis of selected volatiles and air-phase petroleum hydrocarbons. The sample set included one duplicate outdoor air sample, two duplicate indoor air samples, and two duplicate sub-slab vapor samples.

Field activities are detailed in the Indoor Air Quality and Vapor Intrusion Assessment Scope of Work (SOW) Rev. 2, March, 2010 and the Quality Assurance Project Plan (QAPP), Rev. 1, March, 2010. The Quality Assurance and Quality Control Guidelines for the Acquisition and Reporting of Analytical Data in Support of Response Actions Conducted Under the Massachusetts Contingency Plan, Rev. 3.2, May 21, 2004 was also used for this review. Samples were collected for analysis of selected volatiles according to Method TO-15, as modified for Selected Ion Monitoring (SIM), and for air-phase petroleum hydrocarbons according to SOP No. A-003 and the Massachusetts Method for the Determination of Air-Phase Petroleum Hydrocarbons (APH), Massachusetts Department of Environmental Protection, December, 2009, Final, Revision 1. Laboratory analyses were performed by Alpha Analytical Laboratories, Inc. (Alpha) of Marshfield, MA. Laboratory results were submitted in SDG No. L1005229. A Data Validation report for the laboratory results submitted as SDG No. L1005229 was prepared separately by Phoenix and submitted to The Johnson Company.

This review encompasses field activities and their proper documentation during site preparation prior to sampling and during sample collection. Identified deviations from the IAQA/VI SOW or QAPP, response actions, and impact to data usability, if any, are described here. Records of field activities examined include the following:

- PID Calibration Sheets from 2/18/10, 3/15/10, 4/6/10, 4/7/10, 4/11/10, and 4/12/10
- PID Building Surveys (2/18/10 and 3/15/10)
- Field Notes (4/7/10 – 4/12/10)
- Soil Gas Well Construction Logs, SV-01 through SV-15
- Ambient Air and Soil Vapor Sampling Forms (4/11/10 - 4/12/10)
- Digital Vacuum Gauge Certificate of Calibration (2/22/10)
- Quality Assurance Unit Reports of Unforeseen Circumstances (Samples IA-01, SV-02, SV-10, and SV-DUP02)
- Chain of Custody documents (#7390 – 7394)
- Structural GPR Scanning Report (PRO Scanning)

I. Pre-Sampling Activities

Pre-sampling activities included two building inspections with air screening using a Mini Rae 3000 photoionization detector (PID), an interview with the facility manager at the UniFirst Property storage facility, selection of sampling sites, and installation of sub-slab vapor probes. The first building inspection was performed on February 18, 2010, and was described in the SOW. The second building inspection was performed on March 15, 2010. The PID was properly calibrated and readings for site background and the calibration standard were properly documented for each day of use. The locations of joints and cracks listed on the PID Screening Form are identified on the Pre-Sampling Building Inspection Figure included in Appendix A2. It was noted by personnel from The Johnson Company on the PID Screening Form that personnel from TRC were present for the March 15, 2010 inspection, with a second PID instrument, and readings were taken at several locations by both parties. TRC data was not submitted for this report, although the notes indicate that good correlation was observed by TRC personnel. Some improper edits (multiple cross-outs, write-overs) were noted in the PID Screening Form. The first page of the PID Screening Form for the February 18 and March 15, 2010 inspections does not give the date of the survey; the following pages are properly dated in both sets.

The sub-slab locations were scanned using ground-penetrating radar (GPR) prior to installing the sub-slab vapor sampling probes to ensure that no buried utilities or other inappropriate materials were encountered during the probe installation. The date of the GPR scan is documented in the field notes but not in the report submitted by PRO Scanning. A revision has been requested.

The Soil Gas Well Construction Log documents the installation and integrity testing of the fifteen sub-slab vapor sampling probes. No unusual or unforeseen problems were encountered during construction; several locations required repeating some installation steps to achieve a seal or to achieve the correct depth.

During the final pre-sampling walk-through on April 11, compliance was checked for all pre-sampling requirements (the windows were closed, aisles cleared, potential sources of interference removed, etc.).

II. Sample Collection

The air samples for TO-15 and APH analysis were collected overnight between April 11 and 12, 2010 at the UniFirst Property in Woburn, MA. Individually certified clean canisters equipped with calibrated flow controllers for time-integrated air sampling (1 hour samples for sub-slab sites and 8 hour samples for indoor and outdoor air sites) were obtained from Alpha Analytical Laboratories, Inc. (Alpha) of Marshfield, MA. Analyses of the samples collected were performed by Alpha by Method TO-15 modified for Selected Ion Monitoring (SIM) and the Massachusetts Air-Phase Hydrocarbon (APH) method.

The sampling equipment provided by the laboratory included passivated (fused silica lined, FSL) 6 liter canisters and calibrated flow controllers for each canister, set at a rate of 100 ml/min for the sub-slab vapor locations and at 10 ml/min for the indoor and outdoor ambient air locations. The sampling equipment was properly cleaned, calibrated, and tested prior to release from the laboratory. The sampling equipment was re-tested immediately upon receipt at the laboratory following sampling. All canisters and flow controllers submitted to the field for use met all applicable method requirements.

Sample canisters were collected and transported according to method specifications, and field records were properly completed. Indoor and outdoor ambient air samples were collected according to the SOW and QAPP, as were the sub-slab vapor samples. Minor difficulties in sample collection that did not constitute a deviation from the SOW or QAPP are well documented in the field notes and on the sample collection forms.

Table 1 provides details of final sample vacuum and sampling duration for all samples or equipment that exceeded specifications for change in flow rate, target sampling duration, or final canister vacuum.

Table 1. Sample Collection Exceedances

Sample ID	Flow Controller ID	Rate on release (mL/min)	Rate on return (mL/min)	Change	Final Vacuum* (inches Hg)	Sampling Duration
IA-04	0074	10	11.4	+13 %	-2.1	8 hr 00 min
IA-09	0379	10	11.9	+ 17 %	-4.2	6 hr 41 min
IA-08	0081	10	11.4	+ 13 %	-5.0	6 hr 48 min
IA-01	0290	10	24.4	+ 84 %	+0.5	6 hr 04 min
SV-DUP02	0208	100	104	+4%	-17.1	50 min
SV-02	0451	100	105	+5%	-21.1	49 min
SV-10	0257	100	100	0%	-1.3	53 min

* measured at the laboratory; field measurements were consistently slightly lower (approximately 0.2 to 1.4 in Hg) than laboratory measurements.

As documented on the Soil Gas Construction Log, the outer hole at point SV-02 had to be re-drilled because the original outer hole was too deep; although it is not anticipated that re-drilling at this location resulted in low flow for this canister, the sampling equipment does not appear to be responsible for the low flow. No well construction problems were encountered at point SV-11, and the primary canister at this location (identified as sample SV-11) collected the expected volume in the expected time. Precision was acceptable (range 12.1 – 24.4 % relative percent difference) for values greater than five times the quantitation limit in the paired samples at SV-11, so the low sample volume collected in SV-DUP02 did not adversely affect the ability to demonstrate reproducibility in duplicate samples.

Sample collection was stopped early for sample IA-01 as it reached ambient conditions (-0.6 in Hg as measured in the field). Although sample IA-01 does not present a full 8-hour sample, the canister was checked 33 minutes prior to stopping collection, and still had an acceptable vacuum (-4.5 in Hg).

Canister vacuum status was monitored by the field team using the flow controller vacuum gauges, then checked by the field team following sample collection using a newly calibrated NIST-traceable digital vacuum gauge. The checks were properly documented by field personnel, and the appropriate records were submitted for samples exceeding final canister vacuum; these forms are included in the Appendix B. Sample integrity was deemed acceptable for all samples.

A. Blanks

In accordance with the QAPP and SOW, one trip blank (TB) was collected in this field event. A trip blank is not required for either Method TO-15 or the MA APH method, nor is a field blank required for either Method TO-15 or the MA APH method. The trip blank submitted with this sample set was used as both a trip blank and as a field blank (the canister was subjected to the same post-sampling vacuum checks as all sample canisters). No target compounds were detected in the TB, with the exception that C9 – C12 aliphatic hydrocarbons at the reporting limit (14 ug/m^3) were reported in the APH analysis; and tetrachloroethene at a low concentration (0.732 ug/m^3) was reported in the TO-15 SIM analysis (see Data Validation report for SDG No. L1005229). On the basis of field contamination, a total of eight results in field samples were qualified as less than the reported value (U), raising the reporting limit above the target value. Details may be found in the Data Validation Report for SDG No. L1005229.

B. Field Duplicates

In accordance with the QAPP and SOW, five field duplicate pairs were collected: two indoor air sample sets; two sub-slab vapor sample sets; and one outdoor air sample set.

Results for a single analyte (total xylenes) in one field duplicate pair (IA-13 and IA-DUP01) exceeded precision limits for the Method TO-15 SIM analysis and were therefore qualified (see Data Validation Report for SDG No. L1005229).

III. Overall Evaluation of Field Activities

Field activities were conducted according to the appropriate SOPs. The response to unforeseen circumstances was appropriate, and did not adversely affect data usability. No discernible deviations from sampling SOPs occurred. Measures of precision, accuracy, representativeness, completeness, comparability, and sensitivity were achieved as follows:

- Five sets of field duplicates were properly collected, and provide a usable measure of sample and sampling precision. Results for a single analyte (total xylenes) in one field duplicate pair (IA-13 and IA-DUP01) exceeded precision limits for the Method TO-15 SIM analysis (see Data Validation Report for SDG No. L1005229).

- The trip blank was properly handled and provides a usable measure of field contamination.

- No other measures of accuracy are included in the field sampling activities for air analyses.

- Site preparation and sampling activities were appropriate, followed all requirements in the SOW and QAPP, and provide acceptable sensitivity to determine the representativeness of the sample results.

- Sampling locations were selected and prepared using appropriate criteria, and PID readings were sufficiently sensitive to identify locations with the highest potential concentrations of target analytes.

- All samples submitted for laboratory analysis met minimum requirements and were appropriately analyzed by the requested methods. Two samples required slight dilutions due

to the slightly low volumes collected. One sample was returned to the laboratory at ambient pressure; however, results from this sample were deemed acceptable because the canister had just reached ambient pressure as sampling was concluded, and laboratory and field vacuum measurements exhibited good correlation.

- Sub-slab sampling sites were appropriately sealed following sample collection.

IV. Documentation

Records of all field activities were present and accurately completed for all site activities and samples. Documentation of field activities was acceptable, with the following exceptions:

- Some improper edits (multiple cross-outs, write-overs) were noted in the PID Screening Form, the Ambient Air and Soil Vapor Sampling Form, and on the chain of custody (COC). All corrections should be made by making a single line through the edit, adding the correct information, and recording the editor's initials and the date.

- The first page of the PID Screening Form for the February 18 and March 15, 2010 inspections does not give the date of the survey; the following pages are properly dated in both sets.

- The date of the GPR scan is not documented in the report submitted by PRO Scanning; a revision has been requested.

Quality Assurance Unit
Record of
(Check One)

[ ] A. *Deviation from Protocol or Standard Operating Procedure*
or
[X] B. *Notation, Correction and Documentation of Unforeseen Circumstances*

Ref: 40 CFR § 160.81, § 160.33 and § 160.35 and SOP-JCO-018

Date(s) of Occurrence: 4/12/2010

Study Designation: Unifirst Property (Project # 1-2114-2)

Study Location: Woburn, MA, USA

Test substance: Sub-slab soil vapor CAS No.: --

Study Sponsor: UniFirst Corporation

Study phase (or segment): Indoor Air Quality and Vapor Intrusion Assessment

Site of problem: SV-10

Scientist, engineer or technician: Initials: TRO/TEH Date: 4/12/2010

Findings:

Weather: 60.2 °F; Inside Facility

List: Personnel, Visitors, Contractors: Thomas Osborne (JCO), Tristan Hardy (JCO), TRC

Equipment: Air Sampling Canister, canister flow controller.

Protocol title, date and section number: Indoor Air Quality and Vapor Intrusion Assessment

Standard Operating Procedure title: Standard Operating Procedure for Soil Vapor Sampling

SOP No: SOP-JCO-062

Type of deviation (inadvertent or planned): No Deviation from SOP

Nature of deviation or unforeseen circumstance: End canister vacuum measured using digital vacuum gauge outside of targeted range (-2 inHg to -10 inHg).

Observations: Certified digital vacuum gauge read -1.6 inHg after sampling was complete.

Problems: The flow controller vacuum gauge was inaccurate. Flow controller vacuum reading was within the targeted range when sampling stopped; end canister vacuum measured during the pressure checks after sampling using the digital vacuum gauge was below the targeted range.

Continuation Sheet Initials:TRO/TEH Date:4/12/210

(Instruction: Number paragraphs consistent with the numbers of items listed under Procedure A or B in SOP-JCO-018. Begin with No. 2. Sheet 1 of this report addresses Item No. 1.)

2. List the consequences of the unforeseen circumstance.

Final vacuum of canister was not within the targeted range of -2 inHg to -10 inHg.

3. Determine if corrective action is possible.

No

4. List corrective action alternatives with most desirable first.

None

9. Prepare full documentation of the facts of the unforeseen circumstances, notification, authorization, and corrective action on Form JCO-QAU-005.

See sampling forms for times and personnel. After the hour sampling time the vacuum reading on the flow controller gauge for SV-10 read -5 inHg and was then turned off to end the sampling. During the pressure verification process using the certified digital vacuum gauge, the vacuum was measured to be -1.6 inHg in the canister. We suspect that the gauge on the flow controller was inaccurate. Due to a residual amount of vacuum still in the canister it was decided to ship the canister to the lab for analysis.

Quality Assurance Unit
Record of
(Check One)

[ ] A. *Deviation from Protocol or Standard Operating Procedure*
or
[X] B. *Notation, Correction and Documentation of Unforeseen Circumstances*

Ref: 40 CFR § 160.81, § 160.33 and § 160.35 and SOP-JCO-018

Date(s) of Occurrence: 4/12/2010

Study Designation: Unifirst Property (Project # 1-2114-2)

Study Location: Woburn, MA, USA

Test substance: Sub-slab soil vapor CAS No.: --

Study Sponsor: UniFirst Corporation

Study phase (or segment): Indoor Air Quality and Vapor Intrusion Assessment

Site of problem: SV-02

Scientist, engineer or technician: Initials: TRO/TEH Date: 4/12/2010

Findings:

Weather: 59.9 °F; Inside Facility

List: Personnel, Visitors, Contractors: Thomas Osborne (JCO), Tristan Hardy (JCO), TRC

Equipment: Air Sampling Canister, canister flow controller.

Protocol title, date and section number: Indoor Air Quality and Vapor Intrusion Assessment

Standard Operating Procedure title: Standard Operating Procedure for Soil Vapor Sampling

SOP No: SOP-JCO-062

Type of deviation (inadvertent or planned): No Deviation from SOP

Nature of deviation or unforeseen circumstance: Determined to be either a faulty soil vapor point or flow controller to sampling canister.

Observations: Gauge on sample canister indicated that very little vapor was sampled over the hour long sampling time. (Start: -30 inHg End: -28 inHg)

Problems: Insufficient flow to the sampling canister.

Continuation Sheet Initials:TRO/TEH Date:4/12/210

(Instruction: Number paragraphs consistent with the numbers of items listed under Procedure A or B in SOP-JCO-018. Begin with No. 2. Sheet 1 of this report addresses Item No. 1.)

2. List the consequences of the unforeseen circumstance.

Insufficient sample was collected into the canister.

3. Determine if corrective action is possible.

Yes

4. List corrective action alternatives with most desirable first.

Availability of an extra canister and flow controller and time allowed for a redo of the sampling procedure at SV-02.

7. Document the corrective action, e.g. change in procedure, materials, equipment, personnel, time.

See sampling forms for times and personnel. Used an extra canister and flow controller to re-run the sample procedure at SV-02. The second run showed an improved sample capture over the first set up. However, the ending pressure still had not reached the goal of 10 inHg (-21.7 inHg). From the two results we suspect that the fault is with the soil vapor point itself.

Quality Assurance Unit
Record of
(Check One)

[ ] A. *Deviation from Protocol or Standard Operating Procedure*
or
[X] B. *Notation, Correction and Documentation of Unforeseen Circumstances*

Ref: 40 CFR § 160.81, § 160.33 and § 160.35 and SOP-JCO-018

Date(s) of Occurrence: 4/11-12/2010

Study Designation: Unifirst Property (Project # 1-2114-2)

Study Location: Woburn, MA, USA

Test substance: Indoor Ambient Air CAS No.: --

Study Sponsor: UniFirst Corporation

Study phase (or segment): Indoor Air Quality and Vapor Intrusion Assessment

Site of problem: IA-01

Scientist, engineer or technician: Initials: TRO/TEH Date: 4/12/2010

Findings:

Weather: 62.7 °F; Inside Facility

List: Personnel, Visitors, Contractors: Thomas Osborne (JCO), Tristan Hardy (JCO), TRC

Equipment: Air Sampling Canister, canister flow controller.

Protocol title, date and section number: Indoor Air Quality and Vapor Intrusion Assessment

Standard Operating Procedure title: Standard Operating Procedure for Indoor Air Sampling for TO-15 Analysis

SOP No: SOP-JCO-063

Type of deviation (inadvertent or planned): No Deviation from SOP

Nature of deviation or unforeseen circumstance: End canister vacuum measured using digital vacuum gauge outside of targeted range (-2 inHg to -10 inHg).

Observations: Certified digital vacuum gauge read -0.6 inHg after sampling was complete.

Problems: The flow controller vacuum gauge was inaccurate. Flow controller vacuum reading was within the targeted range when sampling stopped; end canister vacuum measured during the pressure checks after sampling using the digital vacuum gauge was below the targeted range.

Continuation Sheet Initials:TRO/TEH Date:4/12/210

(Instruction: Number paragraphs consistent with the numbers of items listed under Procedure A or B in SOP-JCO-018. Begin with No. 2. Sheet 1 of this report addresses Item No. 1.)

2. List the consequences of the unforeseen circumstance.

Final vacuum of canister was not within the targeted range of -2 inHg to -10 inHg.

3. Determine if corrective action is possible.

No

4. List corrective action alternatives with most desirable first.

None

9. Prepare full documentation of the facts of the unforeseen circumstances, notification, authorization, and corrective action on Form JCO-QAU-005.

See sampling forms for times and personnel. After the 8 hour sampling time the vacuum reading on the flow controller gauge for IA-01 read -4 inHg and was then turned off to end the sampling. During the pressure verification process using the certified digital vacuum gauge, the vacuum was measured to be -0.6 inHg in the canister. We suspect that the gauge on the flow controller was inaccurate. Due to a residual amount of vacuum still in the canister it was decided to ship the canister to the lab for analysis.

Quality Assurance Unit
Record of
(Check One)

[ ] A. *Deviation from Protocol or Standard Operating Procedure*
or
[X] B. *Notation, Correction and Documentation of Unforeseen Circumstances*

Ref: 40 CFR § 160.81, § 160.33 and § 160.35 and SOP-JCO-018

Date(s) of Occurrence: 4/12/2010

Study Designation: Unifirst Property (Project # 1-2114-2)

Study Location: Woburn, MA, USA

Test substance: Sub-slab soil vapor CAS No.: --

Study Sponsor: UniFirst Corporation

Study phase (or segment): Indoor Air Quality and Vapor Intrusion Assessment

Site of problem: SV-Dup02

Scientist, engineer or technician: Initials: TRO/TEH Date: 4/12/2010

Findings:

Weather: 60.3 °F; Inside Facility

List: Personnel, Visitors, Contractors: Thomas Osborne (JCO), Tristan Hardy (JCO), TRC

Equipment: Air Sampling Canister, canister flow controller.

Protocol title, date and section number: Indoor Air Quality and Vapor Intrusion Assessment

Standard Operating Procedure title: Standard Operating Procedure for Soil Vapor Sampling

SOP No: SOP-JCO-062

Type of deviation (inadvertent or planned): No Deviation from SOP

Nature of deviation or unforeseen circumstance: End canister vacuum measured using digital vacuum gauge outside of targeted range (-2 inHg to -10 inHg).

Observations: Certified digital gauge read -17.4 inHg during the pressure checks after sampling was complete. The paired sample canister for this location, SV-11, was shut off at the same time and had an end sample pressure of -3.3 inHg.

Problems: Faulty flow controller.

Continuation Sheet Initials:TRO/TEH Date:4/12/210

(Instruction: Number paragraphs consistent with the numbers of items listed under Procedure A or B in SOP-JCO-018. Begin with No. 2. Sheet 1 of this report addresses Item No. 1.)

2. List the consequences of the unforeseen circumstance.

Vacuum in canister did not reach the targeted range of -2 inHg to -10 inHg after approximately one hour of sampling time. We were not able to extend sampling time as this was a duplicate sample and the paired canister had reached a pressure of -3.3 inHg.

3. Determine if corrective action is possible.

No

4. List corrective action alternatives with most desirable first.

None

9. Prepare full documentation of the facts of the unforeseen circumstances, notification, authorization, and corrective action on Form JCO-QAU-005.

See sampling forms for times and personnel. After the hour sampling time, the vacuum on the flow controller gauge for SV-Dup02 read -20 inHg and the vacuum on the flow controller for the paired canister (primary SV-11 sample) read -6 inHg. Both canisters were shut off at the same time. During the pressure verification process using the certified digital vacuum gauge, the vacuum was measured to be -17.4 inHg for SV-Dup02 and -3.3 inHg for the paired canister. Due to the paired canister having reached the lower end of the targeted vacuum range, allowing more time for SV-Dup02 to sample could not happen.

APPENDIX C

LABORATORY ANALYTICAL REPORT

ANALYTICAL REPORT

Lab Number:	L1005229
Client:	The Johnson Company, Inc 100 State Street Suite 600 Montpelier, VT 05602
ATTN:	Bettina Longino
Phone:	(802) 229-4600
Project Name:	UNIFIRST PROPERTY IA / VI
Project Number:	1-2114-2
Report Date:	04/29/10

Certifications & Approvals: MA (M-MA030), NY (11627), CT (PH-0141), NH (2206), NJ (MA015), RI (LAO00299), ME (MA0030), PA (Registration #68-02089), LA NELAC (03090), FL NELAC (E87814), US Army Corps of Engineers.

320 Forbes Boulevard, Mansfield, MA 02048-1806
508-822-9300 (Fax) 508-822-3288 800-624-9220 - www.alphalab.com

Project Name: UNIFIRST PROPERTY IA / VI
Project Number: 1-2114-2

Lab Number: L1005229
Report Date: 04/29/10

Alpha Sample ID	Client ID	Sample Location	Collection Date/Time
L1005229-01	IA-12	WOBURN, MA	04/12/10 02:58
L1005229-02	IA-04	WOBURN, MA	04/12/10 02:35
L1005229-03	IA-14	WOBURN, MA	04/12/10 01:40
L1005229-04	OA-03	WOBURN, MA	04/12/10 02:12
L1005229-05	IA-10A	WOBURN, MA	04/12/10 02:30
L1005229-06	IA-11	WOBURN, MA	04/12/10 02:18
L1005229-07	IA-DUP02	WOBURN, MA	04/12/10 02:28
L1005229-08	IA-09	WOBURN, MA	04/12/10 01:10
L1005229-09	IA-08	WOBURN, MA	04/12/10 01:55
L1005229-10	IA-05	WOBURN, MA	04/12/10 02:06
L1005229-11	OA-01	WOBURN, MA	04/12/10 01:00
L1005229-12	SV-07	WOBURN, MA	04/12/10 05:06
L1005229-13	IA-13	WOBURN, MA	04/12/10 02:46
L1005229-14	OA-02	WOBURN, MA	04/12/10 01:37
L1005229-15	IA-DUP01	WOBURN, MA	04/12/10 02:56
L1005229-16	IA-06	WOBURN, MA	04/12/10 02:30
L1005229-17	OA-DUP1	WOBURN, MA	04/12/10 01:47
L1005229-18	IA-15	WOBURN, MA	04/12/10 02:09
L1005229-19	IA-01	WOBURN, MA	04/12/10 00:39
L1005229-20	IA-13A	WOBURN, MA	04/12/10 02:46
L1005229-21	IA-10	WOBURN, MA	04/12/10 02:27
L1005229-22	IA-03	WOBURN, MA	04/12/10 02:01
L1005229-23	IA-07	WOBURN, MA	04/12/10 02:36
L1005229-24	IA-02	WOBURN, MA	04/12/10 02:22
L1005229-25	SV-04	WOBURN, MA	04/12/10 05:07
L1005229-26	SV-14	WOBURN, MA	04/12/10 04:55
L1005229-27	SV-DUP01	WOBURN, MA	04/12/10 05:59
L1005229-28	SV-13	WOBURN, MA	04/12/10 05:49
L1005229-29	SV-03	WOBURN, MA	04/12/10 04:48
L1005229-30	SV-15	WOBURN, MA	04/12/10 06:26
L1005229-31	SV-12	WOBURN, MA	04/12/10 05:24

Alpha Sample ID	Client ID	Sample Location	Collection Date/Time
L1005229-32	SV-05	WOBURN, MA	04/12/10 05:15
L1005229-33	SV-10	WOBURN, MA	04/12/10 05:14
L1005229-34	SV-DUP02	WOBURN, MA	04/12/10 06:12
L1005229-35	SV-09	WOBURN, MA	04/12/10 04:47
L1005229-36	SV-01	WOBURN, MA	04/12/10 04:37
L1005229-37	SV-08	WOBURN, MA	04/12/10 06:32
L1005229-38	TRIP BLANK	WOBURN, MA	
L1005229-39	SV-06	WOBURN, MA	04/12/10 05:22
L1005229-40	SV-02	WOBURN, MA	04/12/10 07:55
L1005229-41	SV-11	WOBURN, MA	04/12/10 06:02
L1005229-42	CAN 1053 FC 269	WOBURN, MA	
L1005229-43	CAN 969 FC 158	WOBURN, MA	
L1005229-44	CAN 1562 FC 166	WOBURN, MA	

Project Name:	UNIFIRST PROPERTY IA / VI	**Lab Number:**	L1005229
Project Number:	1-2114-2	**Report Date:**	04/29/10

MADEP MCP Response Action Analytical Report Certification

This form provides certifications for all samples performed by MCP methods. Please refer to the Sample Results and Container Information sections of this report for specification of MCP methods used for each analysis. The following questions pertain only to MCP Analytical Methods.

An affirmative response to questions A, B, C & D is required for "Presumptive Certainty" status		
A	Were all samples received by the laboratory in a condition consistent with those described on their Chain-of-Custody documentation for the data set?	YES
B	Were all QA/QC procedures required for the specified analytical methods(s) included in this report followed, including the requirement to note and discuss in a narrative QC data that did not meet appropriate performance standards or guidelines?	YES
C	Does the analytical data included in this report meet all the requirements for "Presumptive Certainty", as described in section 2.0 of the MADEP document CAM VII A, "Quality Assurance and Quality Control Guidelines for the Acquisition and Reporting of Analytical Data"?	YES
D	VPH and EPH methods only: Was the VPH or EPH method run without significant modifications, as specified in Section 11.3?	N/A

A response to questions E and F is required for "Presumptive Certainty" status		
E	Were all QC performance standards and recommendations for the specified method(s) achieved?	YES
F	Were results for all analyte-list compounds/elements for the specified method(s) reported?	YES

For any questions answered "No", please refer to the case narrative section on the following page(s).

Please note that sample matrix information is located in the Sample Results section of this report.

Project Name:	UNIFIRST PROPERTY IA / VI	**Lab Number:**	L1005229
Project Number:	1-2114-2	**Report Date:**	04/29/10

Case Narrative

The samples were received in accordance with the Chain of Custody and no significant deviations were encountered during the preparation or analysis unless otherwise noted. Sample Receipt, Container Information, and the Chain of Custody are located at the back of the report.

Results contained within this report relate only to the samples submitted under this Alpha Lab Number and meet all of the requirements of NELAC, for all NELAC accredited parameters. The data presented in this report is organized by parameter (i.e. VOC, SVOC, etc.). Sample specific Quality Control data (i.e. Surrogate Spike Recovery) is reported at the end of the target analyte list for each individual sample, followed by the Laboratory Batch Quality Control at the end of each parameter. If a sample was re-analyzed or re-extracted due to a required quality control corrective action and if both sets of data are reported, the Laboratory ID of the re-analysis or re-extraction is designated with an "R" or "RE", respectively. When multiple Batch Quality Control elements are reported (e.g. more than one LCS), the associated samples for each element are noted in the grey shaded header line of each data table. Any Laboratory Batch, Sample Specific % recovery or RPD value that is outside the listed Acceptance Criteria is bolded in the report. Definitions of all data qualifiers and acronyms used in this report are provided in the Glossary located at the back of the report.

Please see the associated ADEx data file for a comparison of laboratory reporting limits that were achieved with the regulatory Numerical Standards requested on the Chain of Custody.

For additional information, please contact Client Services at 800-624-9220.

Sample Receipt

Several samples had flow controllers that had RSDs >10% and the post flow rate is higher than the pre-sampling flow rate. Client authorized analysis to proceed.

L1005229-19 The RPD of the pre- and post-flow controller calibration check (% RPD) was outside acceptable limits (< or = 20% RPD). Client authorized analysis to proceed.

L1005229-34 and -40: the canister vacuum was > 15 in. Hg upon receipt. Client authorized analysis to proceed.

The canister certification results are provided as an addendum.

The internal standards were within method criteria.

Project Name:	UNIFIRST PROPERTY IA / VI	**Lab Number:**	L1005229
Project Number:	1-2114-2	**Report Date:**	04/29/10

Case Narrative (continued)

Volatile Organics in Air (SIM)

The following compounds: 1,2-Dibromoethane, Bromodichloromethane, and Naphthalene were evaluated down to 1/2 the reporting limit. Any concentration detected in a sample below the standard reporting limit and above 1/2 of this reporting limit will be estimated and qualified with a 'J' flag.

L1005229-15 and -18: the result for Naphthalene should be reported with a 'J' qualifier.

L1005229-37: the result for Bromodichloromethane should be reported with a 'J' qualifier.

L1005229-12, -27, -28, -30 through -35, -39, -41 and the associated duplicate WG409385-5 have elevated detection limits due to the dilution required by the elevated concentrations of target compounds in the samples. The samples were re-analyzed on dilution in order to quantitate the sample within the calibration range. The result should be considered estimated, and is qualified with an E flag, for any compound that exceeded the calibration on the initial analysis. The re-analysis was performed only for the compound that exceeded the calibration range.

L1005229-26 and -37 were re-analyzed on dilution in order to quantitate the sample within the calibration range. The result should be considered estimated, and is qualified with an E flag, for any compound that exceeded the calibration on the initial analysis. The re-analysis was performed only for the compound that exceeded the calibration range.

L1005229-40: Prior to sample analysis, the canisters were pressurized with UHP Nitrogen due to low sample volume upon receipt. The pressurization resulted in a dilution of the sample. The reporting limits have been elevated accordingly.

The WG409175-3 LCS recovery for trans-1,3-Dichloropropene (65%) are outside the 70%-130% acceptance limit. The LCS was within overall method allowances, therefore the analysis proceeded.

The WG409385-3 LCS recovery for trans-1,3-Dichloropropene (68%) is outside the 70%-130% acceptance limit. The LCS was within overall method allowances, therefore the analysis proceeded.

Project Name:	UNIFIRST PROPERTY IA / VI	**Lab Number:**	L1005229
Project Number:	1-2114-2	**Report Date:**	04/29/10

Case Narrative (continued)

The WG409385-9 Method Blank, associated with re-analysis of samples -27, -28, -30 through -35, -39, -41 and the associated duplicate WG409385-5 has a detection for Tetrachloroethene. The results in samples are greater than 100x the blank concentration; therefore, no qualification of results was performed.
MCP Related Narratives

Petroleum Hydrocarbons in Air
All MCP required questions were answered with affirmative responses; therefore, there are no relevant data issues to discuss.
The internal standards were within method criteria.

All significant concentrations of non-petroleum VOCs detected in the TO-15 analysis were subtracted from the corresponding hydrocarbon ranges.

L1005229-12, -27, -28, -30 through -35, -39, -41 and the associated duplicate WG409385-5 have elevated detection limits due to the dilution required by the elevated concentrations of non-target compounds in the sample.

L1005229-01 through -03, -05 through -07, -09, -10, -13, -16, -18, -20, -22, WG409161-5 (duplicate), -23, -26, -29, -35, -36, -40 and the associated duplicate WG409161-5: Tetrachloroethane is present in the C5-C8 Aliphatic Hydrocarbon range. The response for this analyte was not included in the calculation of the C5-C8 range result since it is not a petroleum hydrocarbon.

L1005229-12, -25, -31 through -33 and WG409173-5: 1,1,1-Trichloroethane and Tetrachloroethene are present in the C5-C8 Aliphatic Hydrocarbon range. The response for these analytes was not included in the calculation of the C5-C8 range result since they are not petroleum hydrocarbons.

L1005229-15 and -21: Methylene chloride and Tetrachloroethane are present in the C5-C8 Aliphatic Hydrocarbon range. The response for these analytes was not included in the calculation of the C5-C8 range

Project Name:	UNIFIRST PROPERTY IA / VI	**Lab Number:**	L1005229
Project Number:	1-2114-2	**Report Date:**	04/29/10

Case Narrative (continued)

result since they are not petroleum hydrocarbons.

L1005229-19 and -24: Methylene Chloride is present in the C5-C8 Aliphatic Hydrocarbon range. The response for this analyte was not included in the calculation of the C5-C8 range result since it is not a petroleum hydrocarbon.

L1005229-27, -28, and -39: 1,1,1-Trichloroethane, Trichloroethene, and Tetrachloroethene are present in the C5-C8 Aliphatic Hydrocarbon range. The response for these analytes was not included in the calculation of the C5-C8 range result since they are not petroleum hydrocarbons.

L1005229-30 and WG409386-5: cis-1,2-Dichloroethene, Trichloroethene, and Tetrachloroethene are present in the C5-C8 Aliphatic Hydrocarbon range. The response for these analytes was not included in the calculation of the C5-C8 range result since they are not petroleum hydrocarbons.L1005229-34 and -41: cis-1,2-Dichloroethene, 1,1,1-Trichloroethane, Trichloroethene, and Tetrachloroethene are present in the C5-C8 Aliphatic Hydrocarbon range. The response for these analytes was not included in the calculation of the C5-C8 range result since they are not petroleum hydrocarbons.

L1005229-37: Chloroform and Tetrachloroethane are present in the C5-C8 Aliphatic Hydrocarbon range. The response for these analytes was not included in the calculation of the C5-C8 range result since they are not petroleum hydrocarbons.

L1005229-40: Prior to sample analysis, the canister was pressurized with UHP Nitrogen due to low sample volume upon receipt. The pressurization resulted in a dilution of the sample. The reporting limits have been elevated accordingly.

WG409161-5: The relative percent difference for C9-C12 Aliphatics, adjusted (37%) is above the RPD limit of 25%. The concentration in both the sample and the duplicate is less than five times the reporting limit, therefore no further action was required per the method.

I, the undersigned, attest under the pains and penalties of perjury that, to the best of my knowledge and belief and based upon my personal inquiry of those responsible for providing the information contained in this analytical report, such information is accurate and complete. This certificate of analysis is not complete unless this page accompanies any and all pages of this report.

Authorized Signature: Kathleen M. O'Brien Kathleen O'Brien

Title: Technical Director/Representative Date: 04/29/10

AIR

Project Name: UNIFIRST PROPERTY IA / VI
Project Number: 1-2114-2

Lab Number: L1005229
Report Date: 04/29/10

SAMPLE RESULTS

Lab ID: L1005229-01
Client ID: IA-12
Sample Location: WOBURN, MA
Matrix: Air
Anaytical Method: 48,TO-15-SIM
Analytical Date: 04/20/10 23:35
Analyst: AJ

Date Collected: 04/12/10 02:58
Date Received: 04/12/10
Field Prep: Not Specified

Parameter	ppbV Results	ppbV RDL	ug/m3 Results	ug/m3 RDL	Qualifier	Dilution Factor
Volatile Organics in Air by SIM - Mansfield Lab						
1,1,1-Trichloroethane	0.086	0.020	0.469	0.109		1
1,1,2-Trichloroethane	ND	0.020	ND	0.109		1
1,1-Dichloroethane	ND	0.020	ND	0.081		1
1,1-Dichloroethene	ND	0.020	ND	0.079		1
1,2,4-Trimethylbenzene	0.248	0.020	1.22	0.098		1
1,2-Dibromoethane	ND	0.010	ND	0.077		1
1,2-Dichloroethane	0.134	0.020	0.542	0.081		1
1,2-Dichloropropane	ND	0.020	ND	0.092		1
1,3-Butadiene	0.031	0.020	0.069	0.044		1
1,3-Dichlorobenzene	ND	0.020	ND	0.120		1
1,4-Dichlorobenzene	0.378	0.020	2.27	0.120		1
Benzene	0.332	0.100	1.06	0.319		1
Bromodichloromethane	ND	0.010	ND	0.067		1
Bromoform	ND	0.020	ND	0.206		1
Carbon tetrachloride	0.069	0.020	0.434	0.126		1
Chlorobenzene	ND	0.020	ND	0.092		1
Chloroform	0.032	0.020	0.156	0.098		1
cis-1,2-Dichloroethene	ND	0.020	ND	0.079		1
Ethylbenzene	0.192	0.020	0.833	0.087		1
Methylene chloride	ND	0.500	ND	1.74		1
Methyl tert butyl ether	0.036	0.020	0.130	0.072		1
Naphthalene	0.712	0.050	3.73	0.260		1
Xylenes, Total	0.724	0.060	3.14	0.260		1
Tetrachloroethene	6.64	0.020	45.0	0.136		1
Toluene	2.12	0.050	7.98	0.188		1

Project Name: UNIFIRST PROPERTY IA / VI
Project Number: 1-2114-2

Lab Number: L1005229
Report Date: 04/29/10

SAMPLE RESULTS

Lab ID: L1005229-01
Client ID: IA-12
Sample Location: WOBURN, MA

Date Collected: 04/12/10 02:58
Date Received: 04/12/10
Field Prep: Not Specified

Parameter	ppbV Results	ppbV RDL	ug/m3 Results	ug/m3 RDL	Qualifier	Dilution Factor
Volatile Organics in Air by SIM - Mansfield Lab						
trans-1,2-Dichloroethene	ND	0.020	ND	0.079		1
trans-1,3-Dichloropropene	ND	0.020	ND	0.091		1
Trichloroethene	0.041	0.020	0.220	0.107		1
Vinyl chloride	ND	0.020	ND	0.051		1
Isopropylbenzene	ND	0.500	ND	2.46		1

Project Name: UNIFIRST PROPERTY IA / VI
Project Number: 1-2114-2

Lab Number: L1005229
Report Date: 04/29/10

SAMPLE RESULTS

Lab ID:	L1005229-02	Date Collected:	04/12/10 02:35
Client ID:	IA-04	Date Received:	04/12/10
Sample Location:	WOBURN, MA	Field Prep:	Not Specified
Matrix:	Air		
Anaytical Method:	48,TO-15-SIM		
Analytical Date:	04/21/10 00:14		
Analyst:	AJ		

Parameter	ppbV Results	ppbV RDL	ug/m3 Results	ug/m3 RDL	Qualifier	Dilution Factor
Volatile Organics in Air by SIM - Mansfield Lab						
1,1,1-Trichloroethane	0.054	0.020	0.294	0.109		1
1,1,2-Trichloroethane	ND	0.020	ND	0.109		1
1,1-Dichloroethane	ND	0.020	ND	0.081		1
1,1-Dichloroethene	ND	0.020	ND	0.079		1
1,2,4-Trimethylbenzene	0.326	0.020	1.60	0.098		1
1,2-Dibromoethane	ND	0.010	ND	0.077		1
1,2-Dichloroethane	0.206	0.020	0.833	0.081		1
1,2-Dichloropropane	ND	0.020	ND	0.092		1
1,3-Butadiene	0.021	0.020	0.046	0.044		1
1,3-Dichlorobenzene	ND	0.020	ND	0.120		1
1,4-Dichlorobenzene	1.93	0.020	11.6	0.120		1
Benzene	0.283	0.100	0.903	0.319		1
Bromodichloromethane	ND	0.010	ND	0.067		1
Bromoform	ND	0.020	ND	0.206		1
Carbon tetrachloride	0.067	0.020	0.421	0.126		1
Chlorobenzene	ND	0.020	ND	0.092		1
Chloroform	0.033	0.020	0.161	0.098		1
cis-1,2-Dichloroethene	ND	0.020	ND	0.079		1
Ethylbenzene	0.262	0.020	1.14	0.087		1
Methylene chloride	0.715	0.500	2.48	1.74		1
Methyl tert butyl ether	0.122	0.020	0.439	0.072		1
Naphthalene	0.799	0.050	4.18	0.260		1
Xylenes, Total	0.996	0.060	4.32	0.260		1
Tetrachloroethene	2.82	0.020	19.1	0.136		1
Toluene	5.20	0.050	19.6	0.188		1

Project Name: UNIFIRST PROPERTY IA / VI
Project Number: 1-2114-2

Lab Number: L1005229
Report Date: 04/29/10

SAMPLE RESULTS

Lab ID: L1005229-02
Client ID: IA-04
Sample Location: WOBURN, MA

Date Collected: 04/12/10 02:35
Date Received: 04/12/10
Field Prep: Not Specified

Parameter	ppbV Results	ppbV RDL	ug/m3 Results	ug/m3 RDL	Qualifier	Dilution Factor
Volatile Organics in Air by SIM - Mansfield Lab						
trans-1,2-Dichloroethene	ND	0.020	ND	0.079		1
trans-1,3-Dichloropropene	ND	0.020	ND	0.091		1
Trichloroethene	0.030	0.020	0.161	0.107		1
Vinyl chloride	ND	0.020	ND	0.051		1
Isopropylbenzene	ND	0.500	ND	2.46		1

Project Name: UNIFIRST PROPERTY IA / VI
Project Number: 1-2114-2

Lab Number: L1005229
Report Date: 04/29/10

SAMPLE RESULTS

Lab ID: L1005229-03
Client ID: IA-14
Sample Location: WOBURN, MA
Matrix: Air
Anaytical Method: 48,TO-15-SIM
Analytical Date: 04/21/10 00:53
Analyst: AJ

Date Collected: 04/12/10 01:40
Date Received: 04/12/10
Field Prep: Not Specified

Parameter	ppbV Results	ppbV RDL	ug/m3 Results	ug/m3 RDL	Qualifier	Dilution Factor
Volatile Organics in Air by SIM - Mansfield Lab						
1,1,1-Trichloroethane	0.040	0.020	0.218	0.109		1
1,1,2-Trichloroethane	ND	0.020	ND	0.109		1
1,1-Dichloroethane	ND	0.020	ND	0.081		1
1,1-Dichloroethene	ND	0.020	ND	0.079		1
1,2,4-Trimethylbenzene	0.287	0.020	1.41	0.098		1
1,2-Dibromoethane	ND	0.010	ND	0.077		1
1,2-Dichloroethane	0.131	0.020	0.530	0.081		1
1,2-Dichloropropane	ND	0.020	ND	0.092		1
1,3-Butadiene	ND	0.020	ND	0.044		1
1,3-Dichlorobenzene	ND	0.020	ND	0.120		1
1,4-Dichlorobenzene	0.702	0.020	4.22	0.120		1
Benzene	0.294	0.100	0.938	0.319		1
Bromodichloromethane	ND	0.010	ND	0.067		1
Bromoform	ND	0.020	ND	0.206		1
Carbon tetrachloride	0.070	0.020	0.440	0.126		1
Chlorobenzene	ND	0.020	ND	0.092		1
Chloroform	0.083	0.020	0.405	0.098		1
cis-1,2-Dichloroethene	ND	0.020	ND	0.079		1
Ethylbenzene	0.329	0.020	1.43	0.087		1
Methylene chloride	ND	0.500	ND	1.74		1
Methyl tert butyl ether	0.070	0.020	0.252	0.072		1
Naphthalene	0.511	0.050	2.68	0.260		1
Xylenes, Total	1.18	0.060	5.11	0.260		1
Tetrachloroethene	2.64	0.020	17.9	0.136		1
Toluene	2.54	0.050	9.58	0.188		1

Project Name: UNIFIRST PROPERTY IA / VI
Project Number: 1-2114-2

Lab Number: L1005229
Report Date: 04/29/10

SAMPLE RESULTS

Lab ID: L1005229-03
Client ID: IA-14
Sample Location: WOBURN, MA

Date Collected: 04/12/10 01:40
Date Received: 04/12/10
Field Prep: Not Specified

Parameter	ppbV Results	ppbV RDL	ug/m3 Results	ug/m3 RDL	Qualifier	Dilution Factor
Volatile Organics in Air by SIM - Mansfield Lab						
trans-1,2-Dichloroethene	ND	0.020	ND	0.079		1
trans-1,3-Dichloropropene	ND	0.020	ND	0.091		1
Trichloroethene	0.022	0.020	0.118	0.107		1
Vinyl chloride	ND	0.020	ND	0.051		1
Isopropylbenzene	ND	0.500	ND	2.46		1

Project Name: UNIFIRST PROPERTY IA / VI
Project Number: 1-2114-2

Lab Number: L1005229
Report Date: 04/29/10

SAMPLE RESULTS

Lab ID:	L1005229-04	Date Collected:	04/12/10 02:12
Client ID:	OA-03	Date Received:	04/12/10
Sample Location:	WOBURN, MA	Field Prep:	Not Specified
Matrix:	Air		
Anaytical Method:	48,TO-15-SIM		
Analytical Date:	04/21/10 01:32		
Analyst:	AJ		

Parameter	ppbV Results	ppbV RDL	ug/m3 Results	ug/m3 RDL	Qualifier	Dilution Factor
Volatile Organics in Air by SIM - Mansfield Lab						
1,1,1-Trichloroethane	0.069	0.020	0.376	0.109		1
1,1,2-Trichloroethane	ND	0.020	ND	0.109		1
1,1-Dichloroethane	ND	0.020	ND	0.081		1
1,1-Dichloroethene	ND	0.020	ND	0.079		1
1,2,4-Trimethylbenzene	0.054	0.020	0.265	0.098		1
1,2-Dibromoethane	ND	0.010	ND	0.077		1
1,2-Dichloroethane	0.020	0.020	ND	0.081		1
1,2-Dichloropropane	ND	0.020	ND	0.092		1
1,3-Butadiene	0.030	0.020	0.066	0.044		1
1,3-Dichlorobenzene	ND	0.020	ND	0.120		1
1,4-Dichlorobenzene	ND	0.020	ND	0.120		1
Benzene	0.257	0.100	0.820	0.319		1
Bromodichloromethane	ND	0.010	ND	0.067		1
Bromoform	ND	0.020	ND	0.206		1
Carbon tetrachloride	0.067	0.020	0.421	0.126		1
Chlorobenzene	ND	0.020	ND	0.092		1
Chloroform	0.027	0.020	0.132	0.098		1
cis-1,2-Dichloroethene	ND	0.020	ND	0.079		1
Ethylbenzene	0.072	0.020	0.312	0.087		1
Methylene chloride	ND	0.500	ND	1.74		1
Methyl tert butyl ether	ND	0.020	ND	0.072		1
Naphthalene	ND	0.050	ND	0.260		1
Xylenes, Total	0.251	0.060	1.09	0.260		1
Tetrachloroethene	0.032	0.020	0.217	0.136		1
Toluene	0.575	0.050	2.16	0.188		1

Project Name: UNIFIRST PROPERTY IA / VI
Project Number: 1-2114-2

Lab Number: L1005229
Report Date: 04/29/10

SAMPLE RESULTS

Lab ID: L1005229-04
Client ID: OA-03
Sample Location: WOBURN, MA

Date Collected: 04/12/10 02:12
Date Received: 04/12/10
Field Prep: Not Specified

Parameter	ppbV Results	ppbV RDL	ug/m3 Results	ug/m3 RDL	Qualifier	Dilution Factor
Volatile Organics in Air by SIM - Mansfield Lab						
trans-1,2-Dichloroethene	ND	0.020	ND	0.079		1
trans-1,3-Dichloropropene	ND	0.020	ND	0.091		1
Trichloroethene	0.022	0.020	0.118	0.107		1
Vinyl chloride	ND	0.020	ND	0.051		1
Isopropylbenzene	ND	0.500	ND	2.46		1

Project Name: UNIFIRST PROPERTY IA / VI
Project Number: 1-2114-2

Lab Number: L1005229
Report Date: 04/29/10

SAMPLE RESULTS

Lab ID: L1005229-05
Client ID: IA-10A
Sample Location: WOBURN, MA
Matrix: Air
Anaytical Method: 48,TO-15-SIM
Analytical Date: 04/21/10 02:11
Analyst: AJ

Date Collected: 04/12/10 02:30
Date Received: 04/12/10
Field Prep: Not Specified

Parameter	ppbV Results	ppbV RDL	ug/m3 Results	ug/m3 RDL	Qualifier	Dilution Factor
Volatile Organics in Air by SIM - Mansfield Lab						
1,1,1-Trichloroethane	0.070	0.020	0.382	0.109		1
1,1,2-Trichloroethane	ND	0.020	ND	0.109		1
1,1-Dichloroethane	ND	0.020	ND	0.081		1
1,1-Dichloroethene	ND	0.020	ND	0.079		1
1,2,4-Trimethylbenzene	0.270	0.020	1.33	0.098		1
1,2-Dibromoethane	ND	0.010	ND	0.077		1
1,2-Dichloroethane	0.216	0.020	0.874	0.081		1
1,2-Dichloropropane	ND	0.020	ND	0.092		1
1,3-Butadiene	ND	0.020	ND	0.044		1
1,3-Dichlorobenzene	ND	0.020	ND	0.120		1
1,4-Dichlorobenzene	1.12	0.020	6.72	0.120		1
Benzene	0.284	0.100	0.906	0.319		1
Bromodichloromethane	ND	0.010	ND	0.067		1
Bromoform	ND	0.020	ND	0.206		1
Carbon tetrachloride	0.066	0.020	0.415	0.126		1
Chlorobenzene	ND	0.020	ND	0.092		1
Chloroform	0.030	0.020	0.146	0.098		1
cis-1,2-Dichloroethene	0.026	0.020	0.103	0.079		1
Ethylbenzene	0.219	0.020	0.950	0.087		1
Methylene chloride	0.503	0.500	1.74	1.74		1
Methyl tert butyl ether	0.074	0.020	0.266	0.072		1
Naphthalene	1.13	0.050	5.91	0.260		1
Xylenes, Total	0.812	0.060	3.52	0.260		1
Tetrachloroethene	4.95	0.020	33.5	0.136		1
Toluene	3.42	0.050	12.9	0.188		1

Project Name: UNIFIRST PROPERTY IA / VI
Project Number: 1-2114-2

Lab Number: L1005229
Report Date: 04/29/10

SAMPLE RESULTS

Lab ID: L1005229-05
Client ID: IA-10A
Sample Location: WOBURN, MA

Date Collected: 04/12/10 02:30
Date Received: 04/12/10
Field Prep: Not Specified

Parameter	ppbV Results	ppbV RDL	ug/m3 Results	ug/m3 RDL	Qualifier	Dilution Factor
Volatile Organics in Air by SIM - Mansfield Lab						
trans-1,2-Dichloroethene	ND	0.020	ND	0.079		1
trans-1,3-Dichloropropene	ND	0.020	ND	0.091		1
Trichloroethene	0.043	0.020	0.231	0.107		1
Vinyl chloride	ND	0.020	ND	0.051		1
Isopropylbenzene	ND	0.500	ND	2.46		1

Project Name: UNIFIRST PROPERTY IA / VI
Project Number: 1-2114-2

Lab Number: L1005229
Report Date: 04/29/10

SAMPLE RESULTS

Lab ID: L1005229-06
Client ID: IA-11
Sample Location: WOBURN, MA
Matrix: Air
Anaytical Method: 48,TO-15-SIM
Analytical Date: 04/21/10 02:49
Analyst: AJ

Date Collected: 04/12/10 02:18
Date Received: 04/12/10
Field Prep: Not Specified

Parameter	ppbV Results	ppbV RDL	ug/m3 Results	ug/m3 RDL	Qualifier	Dilution Factor
Volatile Organics in Air by SIM - Mansfield Lab						
1,1,1-Trichloroethane	0.140	0.020	0.763	0.109		1
1,1,2-Trichloroethane	ND	0.020	ND	0.109		1
1,1-Dichloroethane	ND	0.020	ND	0.081		1
1,1-Dichloroethene	ND	0.020	ND	0.079		1
1,2,4-Trimethylbenzene	0.092	0.020	0.452	0.098		1
1,2-Dibromoethane	ND	0.010	ND	0.077		1
1,2-Dichloroethane	0.034	0.020	0.138	0.081		1
1,2-Dichloropropane	ND	0.020	ND	0.092		1
1,3-Butadiene	0.045	0.020	0.10	0.044		1
1,3-Dichlorobenzene	ND	0.020	ND	0.120		1
1,4-Dichlorobenzene	0.055	0.020	0.330	0.120		1
Benzene	0.249	0.100	0.795	0.319		1
Bromodichloromethane	ND	0.010	ND	0.067		1
Bromoform	ND	0.020	ND	0.206		1
Carbon tetrachloride	0.066	0.020	0.415	0.126		1
Chlorobenzene	ND	0.020	ND	0.092		1
Chloroform	0.029	0.020	0.141	0.098		1
cis-1,2-Dichloroethene	0.043	0.020	0.170	0.079		1
Ethylbenzene	0.111	0.020	0.482	0.087		1
Methylene chloride	ND	0.500	ND	1.74		1
Methyl tert butyl ether	ND	0.020	ND	0.072		1
Naphthalene	0.264	0.050	1.38	0.260		1
Xylenes, Total	0.411	0.060	1.78	0.260		1
Tetrachloroethene	2.92	0.020	19.8	0.136		1
Toluene	0.787	0.050	2.96	0.188		1

Project Name: UNIFIRST PROPERTY IA / VI
Project Number: 1-2114-2

Lab Number: L1005229
Report Date: 04/29/10

SAMPLE RESULTS

Lab ID: L1005229-06
Client ID: IA-11
Sample Location: WOBURN, MA

Date Collected: 04/12/10 02:18
Date Received: 04/12/10
Field Prep: Not Specified

Parameter	ppbV Results	ppbV RDL	ug/m3 Results	ug/m3 RDL	Qualifier	Dilution Factor
Volatile Organics in Air by SIM - Mansfield Lab						
trans-1,2-Dichloroethene	ND	0.020	ND	0.079		1
trans-1,3-Dichloropropene	ND	0.020	ND	0.091		1
Trichloroethene	0.097	0.020	0.521	0.107		1
Vinyl chloride	ND	0.020	ND	0.051		1
Isopropylbenzene	ND	0.500	ND	2.46		1

Project Name: UNIFIRST PROPERTY IA / VI
Project Number: 1-2114-2

Lab Number: L1005229
Report Date: 04/29/10

SAMPLE RESULTS

Lab ID: L1005229-07
Client ID: IA-DUP02
Sample Location: WOBURN, MA
Matrix: Air
Anaytical Method: 48,TO-15-SIM
Analytical Date: 04/21/10 03:28
Analyst: AJ

Date Collected: 04/12/10 02:28
Date Received: 04/12/10
Field Prep: Not Specified

Parameter	ppbV Results	ppbV RDL	ug/m3 Results	ug/m3 RDL	Qualifier	Dilution Factor
Volatile Organics in Air by SIM - Mansfield Lab						
1,1,1-Trichloroethane	0.142	0.020	0.774	0.109		1
1,1,2-Trichloroethane	ND	0.020	ND	0.109		1
1,1-Dichloroethane	ND	0.020	ND	0.081		1
1,1-Dichloroethene	ND	0.020	ND	0.079		1
1,2,4-Trimethylbenzene	0.068	0.020	0.334	0.098		1
1,2-Dibromoethane	ND	0.010	ND	0.077		1
1,2-Dichloroethane	0.033	0.020	0.133	0.081		1
1,2-Dichloropropane	ND	0.020	ND	0.092		1
1,3-Butadiene	0.039	0.020	0.086	0.044		1
1,3-Dichlorobenzene	ND	0.020	ND	0.120		1
1,4-Dichlorobenzene	0.043	0.020	0.258	0.120		1
Benzene	0.257	0.100	0.820	0.319		1
Bromodichloromethane	ND	0.010	ND	0.067		1
Bromoform	ND	0.020	ND	0.206		1
Carbon tetrachloride	0.074	0.020	0.465	0.126		1
Chlorobenzene	ND	0.020	ND	0.092		1
Chloroform	0.030	0.020	0.146	0.098		1
cis-1,2-Dichloroethene	0.037	0.020	0.146	0.079		1
Ethylbenzene	0.091	0.020	0.395	0.087		1
Methylene chloride	ND	0.500	ND	1.74		1
Methyl tert butyl ether	ND	0.020	ND	0.072		1
Naphthalene	0.157	0.050	0.822	0.260		1
Xylenes, Total	0.324	0.060	1.40	0.260		1
Tetrachloroethene	2.54	0.020	17.2	0.136		1
Toluene	0.670	0.050	2.52	0.188		1

Project Name: UNIFIRST PROPERTY IA / VI
Project Number: 1-2114-2
Lab Number: L1005229
Report Date: 04/29/10

SAMPLE RESULTS

Lab ID: L1005229-07
Client ID: IA-DUP02
Sample Location: WOBURN, MA
Date Collected: 04/12/10 02:28
Date Received: 04/12/10
Field Prep: Not Specified

Parameter	ppbV Results	ppbV RDL	ug/m3 Results	ug/m3 RDL	Qualifier	Dilution Factor
Volatile Organics in Air by SIM - Mansfield Lab						
trans-1,2-Dichloroethene	ND	0.020	ND	0.079		1
trans-1,3-Dichloropropene	ND	0.020	ND	0.091		1
Trichloroethene	0.094	0.020	0.505	0.107		1
Vinyl chloride	ND	0.020	ND	0.051		1
Isopropylbenzene	ND	0.500	ND	2.46		1

Project Name: UNIFIRST PROPERTY IA / VI
Project Number: 1-2114-2

Lab Number: L1005229
Report Date: 04/29/10

SAMPLE RESULTS

Lab ID: L1005229-08
Client ID: IA-09
Sample Location: WOBURN, MA
Matrix: Air
Anaytical Method: 48,TO-15-SIM
Analytical Date: 04/21/10 04:07
Analyst: AJ

Date Collected: 04/12/10 01:10
Date Received: 04/12/10
Field Prep: Not Specified

Parameter	ppbV Results	ppbV RDL	ug/m3 Results	ug/m3 RDL	Qualifier	Dilution Factor
Volatile Organics in Air by SIM - Mansfield Lab						
1,1,1-Trichloroethane	0.026	0.020	0.142	0.109		1
1,1,2-Trichloroethane	ND	0.020	ND	0.109		1
1,1-Dichloroethane	ND	0.020	ND	0.081		1
1,1-Dichloroethene	ND	0.020	ND	0.079		1
1,2,4-Trimethylbenzene	0.084	0.020	0.413	0.098		1
1,2-Dibromoethane	ND	0.010	ND	0.077		1
1,2-Dichloroethane	0.060	0.020	0.243	0.081		1
1,2-Dichloropropane	ND	0.020	ND	0.092		1
1,3-Butadiene	0.050	0.020	0.110	0.044		1
1,3-Dichlorobenzene	ND	0.020	ND	0.120		1
1,4-Dichlorobenzene	0.063	0.020	0.378	0.120		1
Benzene	0.447	0.100	1.43	0.319		1
Bromodichloromethane	ND	0.010	ND	0.067		1
Bromoform	ND	0.020	ND	0.206		1
Carbon tetrachloride	0.066	0.020	0.415	0.126		1
Chlorobenzene	ND	0.020	ND	0.092		1
Chloroform	0.040	0.020	0.195	0.098		1
cis-1,2-Dichloroethene	ND	0.020	ND	0.079		1
Ethylbenzene	0.248	0.020	1.08	0.087		1
Methylene chloride	ND	0.500	ND	1.74		1
Methyl tert butyl ether	0.284	0.020	1.02	0.072		1
Naphthalene	ND	0.050	ND	0.260		1
Xylenes, Total	0.838	0.060	3.64	0.260		1
Tetrachloroethene	0.643	0.020	4.36	0.136		1
Toluene	2.25	0.050	8.46	0.188		1

Project Name: UNIFIRST PROPERTY IA / VI
Project Number: 1-2114-2

Lab Number: L1005229
Report Date: 04/29/10

SAMPLE RESULTS

Lab ID: L1005229-08
Client ID: IA-09
Sample Location: WOBURN, MA

Date Collected: 04/12/10 01:10
Date Received: 04/12/10
Field Prep: Not Specified

Parameter	ppbV Results	ppbV RDL	ug/m3 Results	ug/m3 RDL	Qualifier	Dilution Factor
Volatile Organics in Air by SIM - Mansfield Lab						
trans-1,2-Dichloroethene	ND	0.020	ND	0.079		1
trans-1,3-Dichloropropene	ND	0.020	ND	0.091		1
Trichloroethene	0.021	0.020	0.113	0.107		1
Vinyl chloride	ND	0.020	ND	0.051		1
Isopropylbenzene	ND	0.500	ND	2.46		1

Project Name: UNIFIRST PROPERTY IA / VI
Project Number: 1-2114-2

Lab Number: L1005229
Report Date: 04/29/10

SAMPLE RESULTS

Lab ID: L1005229-09
Client ID: IA-08
Sample Location: WOBURN, MA
Matrix: Air
Anaytical Method: 48,TO-15-SIM
Analytical Date: 04/21/10 04:45
Analyst: AJ

Date Collected: 04/12/10 01:55
Date Received: 04/12/10
Field Prep: Not Specified

Parameter	ppbV Results	ppbV RDL	ug/m3 Results	ug/m3 RDL	Qualifier	Dilution Factor
Volatile Organics in Air by SIM - Mansfield Lab						
1,1,1-Trichloroethane	0.042	0.020	0.229	0.109		1
1,1,2-Trichloroethane	ND	0.020	ND	0.109		1
1,1-Dichloroethane	ND	0.020	ND	0.081		1
1,1-Dichloroethene	ND	0.020	ND	0.079		1
1,2,4-Trimethylbenzene	0.243	0.020	1.19	0.098		1
1,2-Dibromoethane	ND	0.010	ND	0.077		1
1,2-Dichloroethane	0.119	0.020	0.481	0.081		1
1,2-Dichloropropane	ND	0.020	ND	0.092		1
1,3-Butadiene	0.025	0.020	0.055	0.044		1
1,3-Dichlorobenzene	ND	0.020	ND	0.120		1
1,4-Dichlorobenzene	0.684	0.020	4.11	0.120		1
Benzene	0.347	0.100	1.11	0.319		1
Bromodichloromethane	ND	0.010	ND	0.067		1
Bromoform	ND	0.020	ND	0.206		1
Carbon tetrachloride	0.078	0.020	0.490	0.126		1
Chlorobenzene	ND	0.020	ND	0.092		1
Chloroform	0.045	0.020	0.220	0.098		1
cis-1,2-Dichloroethene	ND	0.020	ND	0.079		1
Ethylbenzene	0.353	0.020	1.53	0.087		1
Methylene chloride	ND	0.500	ND	1.74		1
Methyl tert butyl ether	0.073	0.020	0.263	0.072		1
Naphthalene	0.368	0.050	1.93	0.260		1
Xylenes, Total	1.24	0.060	5.37	0.260		1
Tetrachloroethene	2.26	0.020	15.3	0.136		1
Toluene	2.59	0.050	9.75	0.188		1

Project Name: UNIFIRST PROPERTY IA / VI
Project Number: 1-2114-2

Lab Number: L1005229
Report Date: 04/29/10

SAMPLE RESULTS

Lab ID: L1005229-09
Client ID: IA-08
Sample Location: WOBURN, MA

Date Collected: 04/12/10 01:55
Date Received: 04/12/10
Field Prep: Not Specified

Parameter	ppbV Results	ppbV RDL	ug/m3 Results	ug/m3 RDL	Qualifier	Dilution Factor
Volatile Organics in Air by SIM - Mansfield Lab						
trans-1,2-Dichloroethene	ND	0.020	ND	0.079		1
trans-1,3-Dichloropropene	ND	0.020	ND	0.091		1
Trichloroethene	0.026	0.020	0.140	0.107		1
Vinyl chloride	ND	0.020	ND	0.051		1
Isopropylbenzene	ND	0.500	ND	2.46		1

Project Name: UNIFIRST PROPERTY IA / VI
Project Number: 1-2114-2

Lab Number: L1005229
Report Date: 04/29/10

SAMPLE RESULTS

Lab ID:	L1005229-10	Date Collected:	04/12/10 02:06
Client ID:	IA-05	Date Received:	04/12/10
Sample Location:	WOBURN, MA	Field Prep:	Not Specified
Matrix:	Air		
Anaytical Method:	48,TO-15-SIM		
Analytical Date:	04/21/10 05:24		
Analyst:	AJ		

	ppbV		ug/m3			
Parameter	**Results**	**RDL**	**Results**	**RDL**	**Qualifier**	**Dilution Factor**
Volatile Organics in Air by SIM - Mansfield Lab						
1,1,1-Trichloroethane	0.040	0.020	0.218	0.109		1
1,1,2-Trichloroethane	ND	0.020	ND	0.109		1
1,1-Dichloroethane	ND	0.020	ND	0.081		1
1,1-Dichloroethene	ND	0.020	ND	0.079		1
1,2,4-Trimethylbenzene	0.208	0.020	1.02	0.098		1
1,2-Dibromoethane	ND	0.010	ND	0.077		1
1,2-Dichloroethane	0.088	0.020	0.356	0.081		1
1,2-Dichloropropane	ND	0.020	ND	0.092		1
1,3-Butadiene	0.044	0.020	0.097	0.044		1
1,3-Dichlorobenzene	ND	0.020	ND	0.120		1
1,4-Dichlorobenzene	0.238	0.020	1.43	0.120		1
Benzene	0.356	0.100	1.14	0.319		1
Bromodichloromethane	ND	0.010	ND	0.067		1
Bromoform	ND	0.020	ND	0.206		1
Carbon tetrachloride	0.064	0.020	0.402	0.126		1
Chlorobenzene	ND	0.020	ND	0.092		1
Chloroform	0.031	0.020	0.151	0.098		1
cis-1,2-Dichloroethene	ND	0.020	ND	0.079		1
Ethylbenzene	0.233	0.020	1.01	0.087		1
Methylene chloride	ND	0.500	ND	1.74		1
Methyl tert butyl ether	0.046	0.020	0.166	0.072		1
Naphthalene	0.224	0.100	1.17	0.524		1
Xylenes, Total	0.926	0.060	4.02	0.260		1
Tetrachloroethene	1.45	0.020	9.83	0.136		1
Toluene	2.01	0.050	7.56	0.188		1

Project Name: UNIFIRST PROPERTY IA / VI
Project Number: 1-2114-2

Lab Number: L1005229
Report Date: 04/29/10

SAMPLE RESULTS

Lab ID: L1005229-10
Client ID: IA-05
Sample Location: WOBURN, MA

Date Collected: 04/12/10 02:06
Date Received: 04/12/10
Field Prep: Not Specified

Parameter	ppbV Results	ppbV RDL	ug/m3 Results	ug/m3 RDL	Qualifier	Dilution Factor
Volatile Organics in Air by SIM - Mansfield Lab						
trans-1,2-Dichloroethene	ND	0.020	ND	0.079		1
trans-1,3-Dichloropropene	ND	0.020	ND	0.091		1
Trichloroethene	0.022	0.020	0.118	0.107		1
Vinyl chloride	ND	0.020	ND	0.051		1
Isopropylbenzene	ND	0.500	ND	2.46		1

Project Name: UNIFIRST PROPERTY IA / VI
Project Number: 1-2114-2

Lab Number: L1005229
Report Date: 04/29/10

SAMPLE RESULTS

Lab ID: L1005229-11
Client ID: OA-01
Sample Location: WOBURN, MA
Matrix: Air
Anaytical Method: 48,TO-15-SIM
Analytical Date: 04/21/10 06:02
Analyst: AJ

Date Collected: 04/12/10 01:00
Date Received: 04/12/10
Field Prep: Not Specified

Parameter	ppbV Results	ppbV RDL	ug/m3 Results	ug/m3 RDL	Qualifier	Dilution Factor
Volatile Organics in Air by SIM - Mansfield Lab						
1,1,1-Trichloroethane	0.024	0.020	0.131	0.109		1
1,1,2-Trichloroethane	ND	0.020	ND	0.109		1
1,1-Dichloroethane	ND	0.020	ND	0.081		1
1,1-Dichloroethene	ND	0.020	ND	0.079		1
1,2,4-Trimethylbenzene	0.070	0.020	0.344	0.098		1
1,2-Dibromoethane	ND	0.010	ND	0.077		1
1,2-Dichloroethane	0.023	0.020	0.093	0.081		1
1,2-Dichloropropane	ND	0.020	ND	0.092		1
1,3-Butadiene	0.056	0.020	0.124	0.044		1
1,3-Dichlorobenzene	ND	0.020	ND	0.120		1
1,4-Dichlorobenzene	ND	0.020	ND	0.120		1
Benzene	0.267	0.100	0.852	0.319		1
Bromodichloromethane	ND	0.010	ND	0.067		1
Bromoform	ND	0.020	ND	0.206		1
Carbon tetrachloride	0.067	0.020	0.421	0.126		1
Chlorobenzene	ND	0.020	ND	0.092		1
Chloroform	0.033	0.020	0.161	0.098		1
cis-1,2-Dichloroethene	ND	0.020	ND	0.079		1
Ethylbenzene	0.085	0.020	0.369	0.087		1
Methylene chloride	0.689	0.500	2.39	1.74		1
Methyl tert butyl ether	ND	0.020	ND	0.072		1
Naphthalene	ND	0.050	ND	0.260		1
Xylenes, Total	0.320	0.060	1.39	0.260		1
Tetrachloroethene	0.023	0.020	0.156	0.136		1
Toluene	0.616	0.050	2.32	0.188		1

Project Name: UNIFIRST PROPERTY IA / VI
Project Number: 1-2114-2

Lab Number: L1005229
Report Date: 04/29/10

SAMPLE RESULTS

Lab ID: L1005229-11
Client ID: OA-01
Sample Location: WOBURN, MA

Date Collected: 04/12/10 01:00
Date Received: 04/12/10
Field Prep: Not Specified

Parameter	ppbV Results	ppbV RDL	ug/m3 Results	ug/m3 RDL	Qualifier	Dilution Factor
Volatile Organics in Air by SIM - Mansfield Lab						
trans-1,2-Dichloroethene	ND	0.020	ND	0.079		1
trans-1,3-Dichloropropene	ND	0.020	ND	0.091		1
Trichloroethene	0.022	0.020	0.118	0.107		1
Vinyl chloride	ND	0.020	ND	0.051		1
Isopropylbenzene	ND	0.500	ND	2.46		1

Project Name: UNIFIRST PROPERTY IA / VI
Project Number: 1-2114-2

Lab Number: L1005229
Report Date: 04/29/10

SAMPLE RESULTS

Lab ID: L1005229-12 D
Client ID: SV-07
Sample Location: WOBURN, MA
Matrix: Soil_Vapor
Anaytical Method: 48,TO-15-SIM
Analytical Date: 04/23/10 03:40
Analyst: AJ

Date Collected: 04/12/10 05:06
Date Received: 04/12/10
Field Prep: Not Specified

Parameter	ppbV Results	ppbV RDL	ug/m3 Results	ug/m3 RDL	Qualifier	Dilution Factor
Volatile Organics in Air by SIM - Mansfield Lab						
1,1,1-Trichloroethane	51.5	0.200	280	1.09		10
1,1,2-Trichloroethane	ND	0.200	ND	1.09		10
1,1-Dichloroethane	0.870	0.200	3.52	0.809		10
1,1-Dichloroethene	ND	0.200	ND	0.792		10
1,2,4-Trimethylbenzene	ND	0.200	ND	0.982		10
1,2-Dibromoethane	ND	0.100	ND	0.768		10
1,2-Dichloroethane	ND	0.200	ND	0.809		10
1,2-Dichloropropane	ND	0.200	ND	0.924		10
1,3-Butadiene	ND	0.200	ND	0.442		10
1,3-Dichlorobenzene	ND	0.200	ND	1.20		10
1,4-Dichlorobenzene	ND	0.200	ND	1.20		10
Benzene	ND	1.00	ND	3.19		10
Bromodichloromethane	ND	0.100	ND	0.670		10
Bromoform	ND	0.200	ND	2.06		10
Carbon tetrachloride	ND	0.200	ND	1.26		10
Chlorobenzene	ND	0.200	ND	0.920		10
Chloroform	0.530	0.200	2.58	0.976		10
cis-1,2-Dichloroethene	ND	0.200	ND	0.792		10
Ethylbenzene	ND	0.200	ND	0.868		10
Methylene chloride	ND	5.00	ND	17.4		10
Methyl tert butyl ether	ND	0.200	ND	0.720		10
Naphthalene	ND	0.500	ND	2.62		10
Xylenes, Total	ND	0.600	ND	2.60		10
Tetrachloroethene	6990	0.200	47400	1.36	E	10
Toluene	ND	0.500	ND	1.88		10

Project Name: UNIFIRST PROPERTY IA / VI
Project Number: 1-2114-2

Lab Number: L1005229
Report Date: 04/29/10

SAMPLE RESULTS

Lab ID: L1005229-12 D
Client ID: SV-07
Sample Location: WOBURN, MA

Date Collected: 04/12/10 05:06
Date Received: 04/12/10
Field Prep: Not Specified

Parameter	ppbV Results	ppbV RDL	ug/m3 Results	ug/m3 RDL	Qualifier	Dilution Factor
Volatile Organics in Air by SIM - Mansfield Lab						
trans-1,2-Dichloroethene	ND	0.200	ND	0.792		10
trans-1,3-Dichloropropene	ND	0.200	ND	0.907		10
Trichloroethene	2.59	0.200	13.9	1.07		10
Vinyl chloride	ND	0.200	ND	0.511		10
Isopropylbenzene	ND	5.00	ND	24.6		10

Project Name: UNIFIRST PROPERTY IA / VI
Project Number: 1-2114-2

Lab Number: L1005229
Report Date: 04/29/10

SAMPLE RESULTS

Lab ID:	L1005229-12 D2	Date Collected:	04/12/10 05:06
Client ID:	SV-07	Date Received:	04/12/10
Sample Location:	WOBURN, MA	Field Prep:	Not Specified
Matrix:	Soil_Vapor		
Anaytical Method:	48,TO-15-SIM		
Analytical Date:	04/24/10 11:20		
Analyst:	AJ		

Parameter	ppbV Results	ppbV RDL	ug/m3 Results	ug/m3 RDL	Qualifier	Dilution Factor
Volatile Organics in Air by SIM - Mansfield Lab						
Tetrachloroethene	25000	14.7	169000	99.9		736.8

Project Name: UNIFIRST PROPERTY IA / VI
Project Number: 1-2114-2

Lab Number: L1005229
Report Date: 04/29/10

SAMPLE RESULTS

Lab ID: L1005229-13
Client ID: IA-13
Sample Location: WOBURN, MA
Matrix: Air
Anaytical Method: 48,TO-15-SIM
Analytical Date: 04/21/10 06:40
Analyst: AJ

Date Collected: 04/12/10 02:46
Date Received: 04/12/10
Field Prep: Not Specified

Parameter	ppbV Results	ppbV RDL	ug/m3 Results	ug/m3 RDL	Qualifier	Dilution Factor
Volatile Organics in Air by SIM - Mansfield Lab						
1,1,1-Trichloroethane	0.122	0.020	0.665	0.109		1
1,1,2-Trichloroethane	ND	0.020	ND	0.109		1
1,1-Dichloroethane	0.022	0.020	0.089	0.081		1
1,1-Dichloroethene	ND	0.020	ND	0.079		1
1,2,4-Trimethylbenzene	0.148	0.020	0.727	0.098		1
1,2-Dibromoethane	ND	0.010	ND	0.077		1
1,2-Dichloroethane	0.099	0.020	0.400	0.081		1
1,2-Dichloropropane	ND	0.020	ND	0.092		1
1,3-Butadiene	0.034	0.020	0.075	0.044		1
1,3-Dichlorobenzene	ND	0.020	ND	0.120		1
1,4-Dichlorobenzene	0.269	0.020	1.62	0.120		1
Benzene	0.239	0.100	0.763	0.319		1
Bromodichloromethane	ND	0.010	ND	0.067		1
Bromoform	ND	0.020	ND	0.206		1
Carbon tetrachloride	0.066	0.020	0.415	0.126		1
Chlorobenzene	ND	0.020	ND	0.092		1
Chloroform	0.028	0.020	0.136	0.098		1
cis-1,2-Dichloroethene	0.049	0.020	0.194	0.079		1
Ethylbenzene	0.134	0.020	0.581	0.087		1
Methylene chloride	ND	0.500	ND	1.74		1
Methyl tert butyl ether	0.023	0.020	0.083	0.072		1
Naphthalene	1.27	0.050	6.63	0.260		1
Xylenes, Total	0.498	0.060	2.16	0.260		1
Tetrachloroethene	7.11	0.020	48.2	0.136		1
Toluene	1.29	0.050	4.87	0.188		1

Project Name: UNIFIRST PROPERTY IA / VI
Project Number: 1-2114-2

Lab Number: L1005229
Report Date: 04/29/10

SAMPLE RESULTS

Lab ID: L1005229-13
Client ID: IA-13
Sample Location: WOBURN, MA

Date Collected: 04/12/10 02:46
Date Received: 04/12/10
Field Prep: Not Specified

Parameter	ppbV Results	ppbV RDL	ug/m3 Results	ug/m3 RDL	Qualifier	Dilution Factor
Volatile Organics in Air by SIM - Mansfield Lab						
trans-1,2-Dichloroethene	ND	0.020	ND	0.079		1
trans-1,3-Dichloropropene	ND	0.020	ND	0.091		1
Trichloroethene	0.090	0.020	0.483	0.107		1
Vinyl chloride	ND	0.020	ND	0.051		1
Isopropylbenzene	ND	0.500	ND	2.46		1

Project Name: UNIFIRST PROPERTY IA / VI
Project Number: 1-2114-2

Lab Number: L1005229
Report Date: 04/29/10

SAMPLE RESULTS

Lab ID:	L1005229-14	Date Collected:	04/12/10 01:37
Client ID:	OA-02	Date Received:	04/12/10
Sample Location:	WOBURN, MA	Field Prep:	Not Specified
Matrix:	Air		
Anaytical Method:	48,TO-15-SIM		
Analytical Date:	04/21/10 08:16		
Analyst:	AJ		

	ppbV		ug/m3			
Parameter	**Results**	**RDL**	**Results**	**RDL**	**Qualifier**	**Dilution Factor**
Volatile Organics in Air by SIM - Mansfield Lab						
1,1,1-Trichloroethane	0.048	0.020	0.262	0.109		1
1,1,2-Trichloroethane	ND	0.020	ND	0.109		1
1,1-Dichloroethane	ND	0.020	ND	0.081		1
1,1-Dichloroethene	ND	0.020	ND	0.079		1
1,2,4-Trimethylbenzene	0.055	0.020	0.270	0.098		1
1,2-Dibromoethane	ND	0.010	ND	0.077		1
1,2-Dichloroethane	0.020	0.020	ND	0.081		1
1,2-Dichloropropane	ND	0.020	ND	0.092		1
1,3-Butadiene	0.044	0.020	0.097	0.044		1
1,3-Dichlorobenzene	ND	0.020	ND	0.120		1
1,4-Dichlorobenzene	ND	0.020	ND	0.120		1
Benzene	0.253	0.100	0.808	0.319		1
Bromodichloromethane	ND	0.010	ND	0.067		1
Bromoform	ND	0.020	ND	0.206		1
Carbon tetrachloride	0.065	0.020	0.408	0.126		1
Chlorobenzene	ND	0.020	ND	0.092		1
Chloroform	0.030	0.020	0.146	0.098		1
cis-1,2-Dichloroethene	ND	0.020	ND	0.079		1
Ethylbenzene	0.075	0.020	0.325	0.087		1
Methylene chloride	ND	0.500	ND	1.74		1
Methyl tert butyl ether	ND	0.020	ND	0.072		1
Naphthalene	0.106	0.050	0.555	0.260		1
Xylenes, Total	0.269	0.060	1.17	0.260		1
Tetrachloroethene	0.029	0.020	0.196	0.136		1
Toluene	0.632	0.050	2.38	0.188		1

Project Name: UNIFIRST PROPERTY IA / VI
Project Number: 1-2114-2

Lab Number: L1005229
Report Date: 04/29/10

SAMPLE RESULTS

Lab ID: L1005229-14
Client ID: OA-02
Sample Location: WOBURN, MA

Date Collected: 04/12/10 01:37
Date Received: 04/12/10
Field Prep: Not Specified

Parameter	ppbV Results	ppbV RDL	ug/m3 Results	ug/m3 RDL	Qualifier	Dilution Factor
Volatile Organics in Air by SIM - Mansfield Lab						
trans-1,2-Dichloroethene	ND	0.020	ND	0.079		1
trans-1,3-Dichloropropene	ND	0.020	ND	0.091		1
Trichloroethene	0.021	0.020	0.113	0.107		1
Vinyl chloride	ND	0.020	ND	0.051		1
Isopropylbenzene	ND	0.500	ND	2.46		1

Project Name: UNIFIRST PROPERTY IA / VI
Project Number: 1-2114-2

Lab Number: L1005229
Report Date: 04/29/10

SAMPLE RESULTS

Lab ID: L1005229-15
Client ID: IA-DUP01
Sample Location: WOBURN, MA
Matrix: Air
Anaytical Method: 48,TO-15-SIM
Analytical Date: 04/21/10 14:43
Analyst: AJ

Date Collected: 04/12/10 02:56
Date Received: 04/12/10
Field Prep: Not Specified

Parameter	ppbV Results	ppbV RDL	ug/m3 Results	ug/m3 RDL	Qualifier	Dilution Factor
Volatile Organics in Air by SIM - Mansfield Lab						
1,1,1-Trichloroethane	0.120	0.020	0.654	0.109		1
1,1,2-Trichloroethane	ND	0.020	ND	0.109		1
1,1-Dichloroethane	0.021	0.020	0.085	0.081		1
1,1-Dichloroethene	ND	0.020	ND	0.079		1
1,2,4-Trimethylbenzene	0.043	0.020	0.211	0.098		1
1,2-Dibromoethane	ND	0.010	ND	0.077		1
1,2-Dichloroethane	0.090	0.020	0.364	0.081		1
1,2-Dichloropropane	ND	0.020	ND	0.092		1
1,3-Butadiene	0.036	0.020	0.080	0.044		1
1,3-Dichlorobenzene	ND	0.020	ND	0.120		1
1,4-Dichlorobenzene	0.045	0.020	0.270	0.120		1
Benzene	0.234	0.100	0.747	0.319		1
Bromodichloromethane	ND	0.010	ND	0.067		1
Bromoform	ND	0.020	ND	0.206		1
Carbon tetrachloride	0.065	0.020	0.408	0.126		1
Chlorobenzene	ND	0.020	ND	0.092		1
Chloroform	0.025	0.020	0.122	0.098		1
cis-1,2-Dichloroethene	0.045	0.020	0.178	0.079		1
Ethylbenzene	0.091	0.020	0.395	0.087		1
Methylene chloride	1.27	0.500	4.40	1.74		1
Methyl tert butyl ether	ND	0.020	ND	0.072		1
Naphthalene	0.070	0.050	0.367	0.260		1
Xylenes, Total	0.303	0.060	1.31	0.260		1
Tetrachloroethene	6.43	0.020	43.6	0.136		1
Toluene	1.13	0.050	4.26	0.188		1

Project Name: UNIFIRST PROPERTY IA / VI
Project Number: 1-2114-2

Lab Number: L1005229
Report Date: 04/29/10

SAMPLE RESULTS

Lab ID: L1005229-15
Client ID: IA-DUP01
Sample Location: WOBURN, MA

Date Collected: 04/12/10 02:56
Date Received: 04/12/10
Field Prep: Not Specified

Parameter	ppbV Results	ppbV RDL	ug/m3 Results	ug/m3 RDL	Qualifier	Dilution Factor
Volatile Organics in Air by SIM - Mansfield Lab						
trans-1,2-Dichloroethene	ND	0.020	ND	0.079		1
trans-1,3-Dichloropropene	ND	0.020	ND	0.091		1
Trichloroethene	0.084	0.020	0.451	0.107		1
Vinyl chloride	ND	0.020	ND	0.051		1
Isopropylbenzene	ND	0.500	ND	2.46		1

Project Name: UNIFIRST PROPERTY IA / VI
Project Number: 1-2114-2

Lab Number: L1005229
Report Date: 04/29/10

SAMPLE RESULTS

Lab ID:	L1005229-16	Date Collected:	04/12/10 02:30
Client ID:	IA-06	Date Received:	04/12/10
Sample Location:	WOBURN, MA	Field Prep:	Not Specified
Matrix:	Air		
Anaytical Method:	48,TO-15-SIM		
Analytical Date:	04/21/10 10:15		
Analyst:	AJ		

Parameter	ppbV Results	ppbV RDL	ug/m3 Results	ug/m3 RDL	Qualifier	Dilution Factor
Volatile Organics in Air by SIM - Mansfield Lab						
1,1,1-Trichloroethane	0.078	0.020	0.425	0.109		1
1,1,2-Trichloroethane	ND	0.020	ND	0.109		1
1,1-Dichloroethane	ND	0.020	ND	0.081		1
1,1-Dichloroethene	ND	0.020	ND	0.079		1
1,2,4-Trimethylbenzene	0.212	0.020	1.04	0.098		1
1,2-Dibromoethane	ND	0.010	ND	0.077		1
1,2-Dichloroethane	0.139	0.020	0.562	0.081		1
1,2-Dichloropropane	ND	0.020	ND	0.092		1
1,3-Butadiene	0.030	0.020	0.066	0.044		1
1,3-Dichlorobenzene	ND	0.020	ND	0.120		1
1,4-Dichlorobenzene	0.391	0.020	2.35	0.120		1
Benzene	0.370	0.100	1.18	0.319		1
Bromodichloromethane	ND	0.010	ND	0.067		1
Bromoform	ND	0.020	ND	0.206		1
Carbon tetrachloride	0.072	0.020	0.453	0.126		1
Chlorobenzene	ND	0.020	ND	0.092		1
Chloroform	0.033	0.020	0.161	0.098		1
cis-1,2-Dichloroethene	ND	0.020	ND	0.079		1
Ethylbenzene	0.187	0.020	0.811	0.087		1
Methylene chloride	ND	0.500	ND	1.74		1
Methyl tert butyl ether	0.041	0.020	0.148	0.072		1
Naphthalene	0.666	0.050	3.49	0.260		1
Xylenes, Total	0.713	0.060	3.09	0.260		1
Tetrachloroethene	5.45	0.020	36.9	0.136		1
Toluene	2.40	0.050	9.02	0.188		1

Project Name: UNIFIRST PROPERTY IA / VI
Project Number: 1-2114-2

Lab Number: L1005229
Report Date: 04/29/10

SAMPLE RESULTS

Lab ID: L1005229-16
Client ID: IA-06
Sample Location: WOBURN, MA

Date Collected: 04/12/10 02:30
Date Received: 04/12/10
Field Prep: Not Specified

Parameter	ppbV Results	ppbV RDL	ug/m3 Results	ug/m3 RDL	Qualifier	Dilution Factor
Volatile Organics in Air by SIM - Mansfield Lab						
trans-1,2-Dichloroethene	ND	0.020	ND	0.079		1
trans-1,3-Dichloropropene	ND	0.020	ND	0.091		1
Trichloroethene	0.043	0.020	0.231	0.107		1
Vinyl chloride	ND	0.020	ND	0.051		1
Isopropylbenzene	ND	0.500	ND	2.46		1

Project Name: UNIFIRST PROPERTY IA / VI
Project Number: 1-2114-2

Lab Number: L1005229
Report Date: 04/29/10

SAMPLE RESULTS

Lab ID: L1005229-17
Client ID: OA-DUP1
Sample Location: WOBURN, MA
Matrix: Air
Anaytical Method: 48,TO-15-SIM
Analytical Date: 04/21/10 11:32
Analyst: AJ

Date Collected: 04/12/10 01:47
Date Received: 04/12/10
Field Prep: Not Specified

Parameter	ppbV Results	ppbV RDL	ug/m3 Results	ug/m3 RDL	Qualifier	Dilution Factor
Volatile Organics in Air by SIM - Mansfield Lab						
1,1,1-Trichloroethane	0.051	0.020	0.278	0.109		1
1,1,2-Trichloroethane	ND	0.020	ND	0.109		1
1,1-Dichloroethane	ND	0.020	ND	0.081		1
1,1-Dichloroethene	ND	0.020	ND	0.079		1
1,2,4-Trimethylbenzene	0.048	0.020	0.236	0.098		1
1,2-Dibromoethane	ND	0.010	ND	0.077		1
1,2-Dichloroethane	ND	0.020	ND	0.081		1
1,2-Dichloropropane	ND	0.020	ND	0.092		1
1,3-Butadiene	0.033	0.020	0.073	0.044		1
1,3-Dichlorobenzene	ND	0.020	ND	0.120		1
1,4-Dichlorobenzene	ND	0.020	ND	0.120		1
Benzene	0.251	0.100	0.801	0.319		1
Bromodichloromethane	ND	0.010	ND	0.067		1
Bromoform	ND	0.020	ND	0.206		1
Carbon tetrachloride	0.069	0.020	0.434	0.126		1
Chlorobenzene	ND	0.020	ND	0.092		1
Chloroform	0.030	0.020	0.146	0.098		1
cis-1,2-Dichloroethene	ND	0.020	ND	0.079		1
Ethylbenzene	0.069	0.020	0.299	0.087		1
Methylene chloride	ND	0.500	ND	1.74		1
Methyl tert butyl ether	ND	0.020	ND	0.072		1
Naphthalene	ND	0.050	ND	0.260		1
Xylenes, Total	0.235	0.060	1.02	0.260		1
Tetrachloroethene	0.028	0.020	0.190	0.136		1
Toluene	0.585	0.050	2.20	0.188		1

Project Name: UNIFIRST PROPERTY IA / VI
Project Number: 1-2114-2

Lab Number: L1005229
Report Date: 04/29/10

SAMPLE RESULTS

Lab ID: L1005229-17
Client ID: OA-DUP1
Sample Location: WOBURN, MA

Date Collected: 04/12/10 01:47
Date Received: 04/12/10
Field Prep: Not Specified

Parameter	ppbV Results	ppbV RDL	ug/m3 Results	ug/m3 RDL	Qualifier	Dilution Factor
Volatile Organics in Air by SIM - Mansfield Lab						
trans-1,2-Dichloroethene	ND	0.020	ND	0.079		1
trans-1,3-Dichloropropene	ND	0.020	ND	0.091		1
Trichloroethene	0.022	0.020	0.118	0.107		1
Vinyl chloride	ND	0.020	ND	0.051		1
Isopropylbenzene	ND	0.500	ND	2.46		1

Project Name: UNIFIRST PROPERTY IA / VI
Project Number: 1-2114-2

Lab Number: L1005229
Report Date: 04/29/10

SAMPLE RESULTS

Lab ID:	L1005229-18	Date Collected:	04/12/10 02:09
Client ID:	IA-15	Date Received:	04/12/10
Sample Location:	WOBURN, MA	Field Prep:	Not Specified
Matrix:	Air		
Anaytical Method:	48,TO-15-SIM		
Analytical Date:	04/21/10 12:10		
Analyst:	AJ		

Parameter	ppbV Results	ppbV RDL	ug/m3 Results	ug/m3 RDL	Qualifier	Dilution Factor
Volatile Organics in Air by SIM - Mansfield Lab						
1,1,1-Trichloroethane	0.308	0.020	1.68	0.109		1
1,1,2-Trichloroethane	ND	0.020	ND	0.109		1
1,1-Dichloroethane	0.166	0.020	0.671	0.081		1
1,1-Dichloroethene	0.033	0.020	0.131	0.079		1
1,2,4-Trimethylbenzene	0.043	0.020	0.211	0.098		1
1,2-Dibromoethane	ND	0.010	ND	0.077		1
1,2-Dichloroethane	0.023	0.020	0.093	0.081		1
1,2-Dichloropropane	ND	0.020	ND	0.092		1
1,3-Butadiene	0.021	0.020	0.046	0.044		1
1,3-Dichlorobenzene	ND	0.020	ND	0.120		1
1,4-Dichlorobenzene	0.052	0.020	0.312	0.120		1
Benzene	0.208	0.100	0.664	0.319		1
Bromodichloromethane	ND	0.010	ND	0.067		1
Bromoform	ND	0.020	ND	0.206		1
Carbon tetrachloride	0.067	0.020	0.421	0.126		1
Chlorobenzene	ND	0.020	ND	0.092		1
Chloroform	0.047	0.020	0.229	0.098		1
cis-1,2-Dichloroethene	0.144	0.020	0.570	0.079		1
Ethylbenzene	0.223	0.020	0.968	0.087		1
Methylene chloride	ND	0.500	ND	1.74		1
Methyl tert butyl ether	0.020	0.020	0.072	0.072		1
Naphthalene	0.095	0.050	0.498	0.260		1
Xylenes, Total	0.768	0.060	3.33	0.260		1
Tetrachloroethene	1.78	0.020	12.0	0.136		1
Toluene	1.26	0.050	4.74	0.188		1

Project Name: UNIFIRST PROPERTY IA / VI
Project Number: 1-2114-2

Lab Number: L1005229
Report Date: 04/29/10

SAMPLE RESULTS

Lab ID: L1005229-18
Client ID: IA-15
Sample Location: WOBURN, MA

Date Collected: 04/12/10 02:09
Date Received: 04/12/10
Field Prep: Not Specified

Parameter	ppbV Results	ppbV RDL	ug/m3 Results	ug/m3 RDL	Qualifier	Dilution Factor
Volatile Organics in Air by SIM - Mansfield Lab						
trans-1,2-Dichloroethene	ND	0.020	ND	0.079		1
trans-1,3-Dichloropropene	ND	0.020	ND	0.091		1
Trichloroethene	0.042	0.020	0.226	0.107		1
Vinyl chloride	ND	0.020	ND	0.051		1
Isopropylbenzene	ND	0.500	ND	2.46		1

Project Name: UNIFIRST PROPERTY IA / VI
Project Number: 1-2114-2

Lab Number: L1005229
Report Date: 04/29/10

SAMPLE RESULTS

Lab ID:	L1005229-19	Date Collected:	04/12/10 00:39
Client ID:	IA-01	Date Received:	04/12/10
Sample Location:	WOBURN, MA	Field Prep:	Not Specified
Matrix:	Air		
Anaytical Method:	48,TO-15-SIM		
Analytical Date:	04/21/10 12:48		
Analyst:	AJ		

Parameter	ppbV Results	ppbV RDL	ug/m3 Results	ug/m3 RDL	Qualifier	Dilution Factor
Volatile Organics in Air by SIM - Mansfield Lab						
1,1,1-Trichloroethane	0.046	0.020	0.251	0.109		1
1,1,2-Trichloroethane	ND	0.020	ND	0.109		1
1,1-Dichloroethane	ND	0.020	ND	0.081		1
1,1-Dichloroethene	ND	0.020	ND	0.079		1
1,2,4-Trimethylbenzene	0.249	0.020	1.22	0.098		1
1,2-Dibromoethane	ND	0.010	ND	0.077		1
1,2-Dichloroethane	0.137	0.020	0.554	0.081		1
1,2-Dichloropropane	ND	0.020	ND	0.092		1
1,3-Butadiene	ND	0.020	ND	0.044		1
1,3-Dichlorobenzene	ND	0.020	ND	0.120		1
1,4-Dichlorobenzene	5.98	0.020	36.0	0.120		1
Benzene	0.228	0.100	0.728	0.319		1
Bromodichloromethane	ND	0.010	ND	0.067		1
Bromoform	ND	0.020	ND	0.206		1
Carbon tetrachloride	0.073	0.020	0.459	0.126		1
Chlorobenzene	ND	0.020	ND	0.092		1
Chloroform	0.044	0.020	0.215	0.098		1
cis-1,2-Dichloroethene	ND	0.020	ND	0.079		1
Ethylbenzene	0.198	0.020	0.859	0.087		1
Methylene chloride	1.04	0.500	3.60	1.74		1
Methyl tert butyl ether	0.110	0.020	0.396	0.072		1
Naphthalene	0.440	0.050	2.30	0.260		1
Xylenes, Total	0.690	0.060	2.99	0.260		1
Tetrachloroethene	0.644	0.020	4.36	0.136		1
Toluene	1.56	0.050	5.86	0.188		1

Project Name: UNIFIRST PROPERTY IA / VI
Project Number: 1-2114-2

Lab Number: L1005229
Report Date: 04/29/10

SAMPLE RESULTS

Lab ID: L1005229-19
Client ID: IA-01
Sample Location: WOBURN, MA

Date Collected: 04/12/10 00:39
Date Received: 04/12/10
Field Prep: Not Specified

Parameter	ppbV Results	ppbV RDL	ug/m3 Results	ug/m3 RDL	Qualifier	Dilution Factor
Volatile Organics in Air by SIM - Mansfield Lab						
trans-1,2-Dichloroethene	ND	0.020	ND	0.079		1
trans-1,3-Dichloropropene	ND	0.020	ND	0.091		1
Trichloroethene	ND	0.020	ND	0.107		1
Vinyl chloride	ND	0.020	ND	0.051		1
Isopropylbenzene	ND	0.500	ND	2.46		1

Project Name: UNIFIRST PROPERTY IA / VI
Project Number: 1-2114-2

Lab Number: L1005229
Report Date: 04/29/10

SAMPLE RESULTS

Lab ID: L1005229-20
Client ID: IA-13A
Sample Location: WOBURN, MA
Matrix: Air
Anaytical Method: 48,TO-15-SIM
Analytical Date: 04/21/10 13:26
Analyst: AJ

Date Collected: 04/12/10 02:46
Date Received: 04/12/10
Field Prep: Not Specified

Parameter	ppbV Results	ppbV RDL	ug/m3 Results	ug/m3 RDL	Qualifier	Dilution Factor
Volatile Organics in Air by SIM - Mansfield Lab						
1,1,1-Trichloroethane	0.131	0.020	0.714	0.109		1
1,1,2-Trichloroethane	ND	0.020	ND	0.109		1
1,1-Dichloroethane	0.022	0.020	0.089	0.081		1
1,1-Dichloroethene	ND	0.020	ND	0.079		1
1,2,4-Trimethylbenzene	0.161	0.020	0.791	0.098		1
1,2-Dibromoethane	ND	0.010	ND	0.077		1
1,2-Dichloroethane	0.100	0.020	0.404	0.081		1
1,2-Dichloropropane	ND	0.020	ND	0.092		1
1,3-Butadiene	0.032	0.020	0.071	0.044		1
1,3-Dichlorobenzene	ND	0.020	ND	0.120		1
1,4-Dichlorobenzene	0.304	0.020	1.83	0.120		1
Benzene	0.246	0.100	0.785	0.319		1
Bromodichloromethane	ND	0.010	ND	0.067		1
Bromoform	ND	0.020	ND	0.206		1
Carbon tetrachloride	0.065	0.020	0.408	0.126		1
Chlorobenzene	ND	0.020	ND	0.092		1
Chloroform	0.027	0.020	0.132	0.098		1
cis-1,2-Dichloroethene	0.050	0.020	0.198	0.079		1
Ethylbenzene	0.136	0.020	0.590	0.087		1
Methylene chloride	ND	0.500	ND	1.74		1
Methyl tert butyl ether	0.020	0.020	0.072	0.072		1
Naphthalene	2.98	0.050	15.6	0.260		1
Xylenes, Total	0.502	0.060	2.18	0.260		1
Tetrachloroethene	8.88	0.020	60.2	0.136		1
Toluene	1.27	0.050	4.80	0.188		1

Project Name: UNIFIRST PROPERTY IA / VI
Project Number: 1-2114-2

Lab Number: L1005229
Report Date: 04/29/10

SAMPLE RESULTS

Lab ID: L1005229-20
Client ID: IA-13A
Sample Location: WOBURN, MA

Date Collected: 04/12/10 02:46
Date Received: 04/12/10
Field Prep: Not Specified

Parameter	ppbV Results	ppbV RDL	ug/m3 Results	ug/m3 RDL	Qualifier	Dilution Factor
Volatile Organics in Air by SIM - Mansfield Lab						
trans-1,2-Dichloroethene	ND	0.020	ND	0.079		1
trans-1,3-Dichloropropene	ND	0.020	ND	0.091		1
Trichloroethene	0.095	0.020	0.510	0.107		1
Vinyl chloride	ND	0.020	ND	0.051		1
Isopropylbenzene	ND	0.500	ND	2.46		1

Project Name: UNIFIRST PROPERTY IA / VI
Project Number: 1-2114-2

Lab Number: L1005229
Report Date: 04/29/10

SAMPLE RESULTS

Lab ID: L1005229-21
Client ID: IA-10
Sample Location: WOBURN, MA
Matrix: Air
Anaytical Method: 48,TO-15-SIM
Analytical Date: 04/21/10 14:05
Analyst: AJ

Date Collected: 04/12/10 02:27
Date Received: 04/12/10
Field Prep: Not Specified

Parameter	ppbV Results	ppbV RDL	ug/m3 Results	ug/m3 RDL	Qualifier	Dilution Factor
Volatile Organics in Air by SIM - Mansfield Lab						
1,1,1-Trichloroethane	0.068	0.020	0.371	0.109		1
1,1,2-Trichloroethane	ND	0.020	ND	0.109		1
1,1-Dichloroethane	ND	0.020	ND	0.081		1
1,1-Dichloroethene	ND	0.020	ND	0.079		1
1,2,4-Trimethylbenzene	0.225	0.020	1.10	0.098		1
1,2-Dibromoethane	ND	0.010	ND	0.077		1
1,2-Dichloroethane	0.206	0.020	0.833	0.081		1
1,2-Dichloropropane	ND	0.020	ND	0.092		1
1,3-Butadiene	ND	0.020	ND	0.044		1
1,3-Dichlorobenzene	ND	0.020	ND	0.120		1
1,4-Dichlorobenzene	1.01	0.020	6.08	0.120		1
Benzene	0.270	0.100	0.862	0.319		1
Bromodichloromethane	ND	0.010	ND	0.067		1
Bromoform	ND	0.020	ND	0.206		1
Carbon tetrachloride	0.070	0.020	0.440	0.126		1
Chlorobenzene	ND	0.020	ND	0.092		1
Chloroform	0.029	0.020	0.141	0.098		1
cis-1,2-Dichloroethene	0.024	0.020	0.095	0.079		1
Ethylbenzene	0.185	0.020	0.803	0.087		1
Methylene chloride	1.10	0.500	3.82	1.74		1
Methyl tert butyl ether	0.069	0.020	0.248	0.072		1
Naphthalene	0.822	0.050	4.30	0.260		1
Xylenes, Total	0.685	0.060	2.97	0.260		1
Tetrachloroethene	4.13	0.020	28.0	0.136		1
Toluene	3.15	0.050	11.9	0.188		1

Project Name: UNIFIRST PROPERTY IA / VI
Project Number: 1-2114-2

Lab Number: L1005229
Report Date: 04/29/10

SAMPLE RESULTS

Lab ID: L1005229-21
Client ID: IA-10
Sample Location: WOBURN, MA

Date Collected: 04/12/10 02:27
Date Received: 04/12/10
Field Prep: Not Specified

Parameter	ppbV Results	ppbV RDL	ug/m3 Results	ug/m3 RDL	Qualifier	Dilution Factor
Volatile Organics in Air by SIM - Mansfield Lab						
trans-1,2-Dichloroethene	ND	0.020	ND	0.079		1
trans-1,3-Dichloropropene	ND	0.020	ND	0.091		1
Trichloroethene	0.041	0.020	0.220	0.107		1
Vinyl chloride	ND	0.020	ND	0.051		1
Isopropylbenzene	ND	0.500	ND	2.46		1

Project Name: UNIFIRST PROPERTY IA / VI
Project Number: 1-2114-2

Lab Number: L1005229
Report Date: 04/29/10

SAMPLE RESULTS

Lab ID: L1005229-22
Client ID: IA-03
Sample Location: WOBURN, MA
Matrix: Air
Anaytical Method: 48,TO-15-SIM
Analytical Date: 04/21/10 23:28
Analyst: AJ

Date Collected: 04/12/10 02:01
Date Received: 04/12/10
Field Prep: Not Specified

Parameter	ppbV Results	ppbV RDL	ug/m3 Results	ug/m3 RDL	Qualifier	Dilution Factor
Volatile Organics in Air by SIM - Mansfield Lab						
1,1,1-Trichloroethane	0.054	0.020	0.294	0.109		1
1,1,2-Trichloroethane	ND	0.020	ND	0.109		1
1,1-Dichloroethane	ND	0.020	ND	0.081		1
1,1-Dichloroethene	ND	0.020	ND	0.079		1
1,2,4-Trimethylbenzene	0.230	0.020	1.13	0.098		1
1,2-Dibromoethane	ND	0.010	ND	0.077		1
1,2-Dichloroethane	0.161	0.020	0.651	0.081		1
1,2-Dichloropropane	ND	0.020	ND	0.092		1
1,3-Butadiene	0.020	0.020	0.044	0.044		1
1,3-Dichlorobenzene	ND	0.020	ND	0.120		1
1,4-Dichlorobenzene	2.63	0.020	15.8	0.120		1
Benzene	0.270	0.100	0.862	0.319		1
Bromodichloromethane	ND	0.010	ND	0.067		1
Bromoform	ND	0.020	ND	0.206		1
Carbon tetrachloride	0.065	0.020	0.408	0.126		1
Chlorobenzene	ND	0.020	ND	0.092		1
Chloroform	0.036	0.020	0.176	0.098		1
cis-1,2-Dichloroethene	ND	0.020	ND	0.079		1
Ethylbenzene	0.205	0.020	0.889	0.087		1
Methylene chloride	0.785	0.500	2.72	1.74		1
Methyl tert butyl ether	0.123	0.020	0.443	0.072		1
Naphthalene	0.401	0.050	2.10	0.260		1
Xylenes, Total	0.742	0.060	3.22	0.260		1
Tetrachloroethene	1.29	0.020	8.75	0.136		1
Toluene	2.33	0.050	8.77	0.188		1

Project Name: UNIFIRST PROPERTY IA / VI
Project Number: 1-2114-2

Lab Number: L1005229
Report Date: 04/29/10

SAMPLE RESULTS

Lab ID: L1005229-22
Client ID: IA-03
Sample Location: WOBURN, MA

Date Collected: 04/12/10 02:01
Date Received: 04/12/10
Field Prep: Not Specified

Parameter	ppbV Results	ppbV RDL	ug/m3 Results	ug/m3 RDL	Qualifier	Dilution Factor
Volatile Organics in Air by SIM - Mansfield Lab						
trans-1,2-Dichloroethene	ND	0.020	ND	0.079		1
trans-1,3-Dichloropropene	ND	0.020	ND	0.091		1
Trichloroethene	0.021	0.020	0.113	0.107		1
Vinyl chloride	ND	0.020	ND	0.051		1
Isopropylbenzene	ND	0.500	ND	2.46		1

Project Name: UNIFIRST PROPERTY IA / VI
Project Number: 1-2114-2

Lab Number: L1005229
Report Date: 04/29/10

SAMPLE RESULTS

Lab ID:	L1005229-23	Date Collected:	04/12/10 02:36
Client ID:	IA-07	Date Received:	04/12/10
Sample Location:	WOBURN, MA	Field Prep:	Not Specified
Matrix:	Air		
Anaytical Method:	48,TO-15-SIM		
Analytical Date:	04/22/10 00:06		
Analyst:	AJ		

Parameter	ppbV Results	ppbV RDL	ug/m3 Results	ug/m3 RDL	Qualifier	Dilution Factor
Volatile Organics in Air by SIM - Mansfield Lab						
1,1,1-Trichloroethane	0.090	0.020	0.491	0.109		1
1,1,2-Trichloroethane	ND	0.020	ND	0.109		1
1,1-Dichloroethane	ND	0.020	ND	0.081		1
1,1-Dichloroethene	ND	0.020	ND	0.079		1
1,2,4-Trimethylbenzene	0.195	0.020	0.958	0.098		1
1,2-Dibromoethane	ND	0.010	ND	0.077		1
1,2-Dichloroethane	0.164	0.020	0.663	0.081		1
1,2-Dichloropropane	ND	0.020	ND	0.092		1
1,3-Butadiene	0.028	0.020	0.062	0.044		1
1,3-Dichlorobenzene	ND	0.020	ND	0.120		1
1,4-Dichlorobenzene	0.625	0.020	3.75	0.120		1
Benzene	0.311	0.100	0.993	0.319		1
Bromodichloromethane	ND	0.010	ND	0.067		1
Bromoform	ND	0.020	ND	0.206		1
Carbon tetrachloride	0.067	0.020	0.421	0.126		1
Chlorobenzene	ND	0.020	ND	0.092		1
Chloroform	0.031	0.020	0.151	0.098		1
cis-1,2-Dichloroethene	0.028	0.020	0.111	0.079		1
Ethylbenzene	0.189	0.020	0.820	0.087		1
Methylene chloride	0.502	0.500	1.74	1.74		1
Methyl tert butyl ether	0.055	0.020	0.198	0.072		1
Naphthalene	0.821	0.050	4.30	0.260		1
Xylenes, Total	0.706	0.060	3.06	0.260		1
Tetrachloroethene	4.41	0.020	29.9	0.136		1
Toluene	2.85	0.050	10.7	0.188		1

Project Name: UNIFIRST PROPERTY IA / VI
Project Number: 1-2114-2

Lab Number: L1005229
Report Date: 04/29/10

SAMPLE RESULTS

Lab ID: L1005229-23
Client ID: IA-07
Sample Location: WOBURN, MA

Date Collected: 04/12/10 02:36
Date Received: 04/12/10
Field Prep: Not Specified

Parameter	ppbV Results	ppbV RDL	ug/m3 Results	ug/m3 RDL	Qualifier	Dilution Factor
Volatile Organics in Air by SIM - Mansfield Lab						
trans-1,2-Dichloroethene	ND	0.020	ND	0.079		1
trans-1,3-Dichloropropene	ND	0.020	ND	0.091		1
Trichloroethene	0.060	0.020	0.322	0.107		1
Vinyl chloride	ND	0.020	ND	0.051		1
Isopropylbenzene	ND	0.500	ND	2.46		1

Project Name: UNIFIRST PROPERTY IA / VI
Project Number: 1-2114-2

Lab Number: L1005229
Report Date: 04/29/10

SAMPLE RESULTS

Lab ID:	L1005229-24	Date Collected:	04/12/10 02:22
Client ID:	IA-02	Date Received:	04/12/10
Sample Location:	WOBURN, MA	Field Prep:	Not Specified
Matrix:	Air		
Anaytical Method:	48,TO-15-SIM		
Analytical Date:	04/22/10 00:45		
Analyst:	AJ		

Parameter	ppbV Results	ppbV RDL	ug/m3 Results	ug/m3 RDL	Qualifier	Dilution Factor
Volatile Organics in Air by SIM - Mansfield Lab						
1,1,1-Trichloroethane	0.055	0.020	0.300	0.109		1
1,1,2-Trichloroethane	ND	0.020	ND	0.109		1
1,1-Dichloroethane	ND	0.020	ND	0.081		1
1,1-Dichloroethene	ND	0.020	ND	0.079		1
1,2,4-Trimethylbenzene	0.227	0.020	1.12	0.098		1
1,2-Dibromoethane	ND	0.010	ND	0.077		1
1,2-Dichloroethane	0.150	0.020	0.607	0.081		1
1,2-Dichloropropane	ND	0.020	ND	0.092		1
1,3-Butadiene	0.024	0.020	0.053	0.044		1
1,3-Dichlorobenzene	ND	0.020	ND	0.120		1
1,4-Dichlorobenzene	6.68	0.020	40.1	0.120		1
Benzene	0.282	0.100	0.900	0.319		1
Bromodichloromethane	ND	0.010	ND	0.067		1
Bromoform	ND	0.020	ND	0.206		1
Carbon tetrachloride	0.077	0.020	0.484	0.126		1
Chlorobenzene	ND	0.020	ND	0.092		1
Chloroform	0.054	0.020	0.263	0.098		1
cis-1,2-Dichloroethene	ND	0.020	ND	0.079		1
Ethylbenzene	0.198	0.020	0.859	0.087		1
Methylene chloride	1.06	0.500	3.68	1.74		1
Methyl tert butyl ether	0.125	0.020	0.450	0.072		1
Naphthalene	0.419	0.050	2.19	0.260		1
Xylenes, Total	0.685	0.060	2.97	0.260		1
Tetrachloroethene	0.641	0.020	4.34	0.136		1
Toluene	1.64	0.050	6.18	0.188		1

Project Name: UNIFIRST PROPERTY IA / VI
Project Number: 1-2114-2

Lab Number: L1005229
Report Date: 04/29/10

SAMPLE RESULTS

Lab ID: L1005229-24
Client ID: IA-02
Sample Location: WOBURN, MA

Date Collected: 04/12/10 02:22
Date Received: 04/12/10
Field Prep: Not Specified

Parameter	ppbV Results	ppbV RDL	ug/m3 Results	ug/m3 RDL	Qualifier	Dilution Factor
Volatile Organics in Air by SIM - Mansfield Lab						
trans-1,2-Dichloroethene	ND	0.020	ND	0.079		1
trans-1,3-Dichloropropene	ND	0.020	ND	0.091		1
Trichloroethene	ND	0.020	ND	0.107		1
Vinyl chloride	ND	0.020	ND	0.051		1
Isopropylbenzene	ND	0.500	ND	2.46		1

Project Name: UNIFIRST PROPERTY IA / VI
Project Number: 1-2114-2

Lab Number: L1005229
Report Date: 04/29/10

SAMPLE RESULTS

Lab ID: L1005229-25
Client ID: SV-04
Sample Location: WOBURN, MA
Matrix: Soil_Vapor
Anaytical Method: 48,TO-15-SIM
Analytical Date: 04/22/10 02:39
Analyst: AJ

Date Collected: 04/12/10 05:07
Date Received: 04/12/10
Field Prep: Not Specified

Parameter	ppbV Results	ppbV RDL	ug/m3 Results	ug/m3 RDL	Qualifier	Dilution Factor
Volatile Organics in Air by SIM - Mansfield Lab						
1,1,1-Trichloroethane	0.999	0.020	5.45	0.109		1
1,1,2-Trichloroethane	ND	0.020	ND	0.109		1
1,1-Dichloroethane	ND	0.020	ND	0.081		1
1,1-Dichloroethene	ND	0.020	ND	0.079		1
1,2,4-Trimethylbenzene	0.022	0.020	0.108	0.098		1
1,2-Dibromoethane	ND	0.010	ND	0.077		1
1,2-Dichloroethane	ND	0.020	ND	0.081		1
1,2-Dichloropropane	ND	0.020	ND	0.092		1
1,3-Butadiene	ND	0.020	ND	0.044		1
1,3-Dichlorobenzene	ND	0.020	ND	0.120		1
1,4-Dichlorobenzene	0.031	0.020	0.186	0.120		1
Benzene	ND	0.100	ND	0.319		1
Bromodichloromethane	ND	0.010	ND	0.067		1
Bromoform	ND	0.020	ND	0.206		1
Carbon tetrachloride	0.034	0.020	0.214	0.126		1
Chlorobenzene	ND	0.020	ND	0.092		1
Chloroform	ND	0.020	ND	0.098		1
cis-1,2-Dichloroethene	ND	0.020	ND	0.079		1
Ethylbenzene	ND	0.020	ND	0.087		1
Methylene chloride	ND	0.500	ND	1.74		1
Methyl tert butyl ether	ND	0.020	ND	0.072		1
Naphthalene	ND	0.050	ND	0.260		1
Xylenes, Total	ND	0.060	ND	0.260		1
Tetrachloroethene	29.7	0.020	201	0.136		1
Toluene	0.100	0.050	0.376	0.188		1

Project Name: UNIFIRST PROPERTY IA / VI
Project Number: 1-2114-2

Lab Number: L1005229
Report Date: 04/29/10

SAMPLE RESULTS

Lab ID: L1005229-25
Client ID: SV-04
Sample Location: WOBURN, MA

Date Collected: 04/12/10 05:07
Date Received: 04/12/10
Field Prep: Not Specified

Parameter	ppbV Results	ppbV RDL	ug/m3 Results	ug/m3 RDL	Qualifier	Dilution Factor
Volatile Organics in Air by SIM - Mansfield Lab						
trans-1,2-Dichloroethene	ND	0.020	ND	0.079		1
trans-1,3-Dichloropropene	ND	0.020	ND	0.091		1
Trichloroethene	ND	0.020	ND	0.107		1
Vinyl chloride	ND	0.020	ND	0.051		1
Isopropylbenzene	ND	0.500	ND	2.46		1

Project Name: UNIFIRST PROPERTY IA / VI
Project Number: 1-2114-2

Lab Number: L1005229
Report Date: 04/29/10

SAMPLE RESULTS

Lab ID: L1005229-26
Client ID: SV-14
Sample Location: WOBURN, MA
Matrix: Soil_Vapor
Anaytical Method: 48,TO-15-SIM
Analytical Date: 04/22/10 05:49
Analyst: AJ

Date Collected: 04/12/10 04:55
Date Received: 04/12/10
Field Prep: Not Specified

Parameter	ppbV Results	ppbV RDL	ug/m3 Results	ug/m3 RDL	Qualifier	Dilution Factor
Volatile Organics in Air by SIM - Mansfield Lab						
1,1,1-Trichloroethane	0.149	0.020	0.812	0.109		1
1,1,2-Trichloroethane	ND	0.020	ND	0.109		1
1,1-Dichloroethane	ND	0.020	ND	0.081		1
1,1-Dichloroethene	ND	0.020	ND	0.079		1
1,2,4-Trimethylbenzene	ND	0.020	ND	0.098		1
1,2-Dibromoethane	ND	0.010	ND	0.077		1
1,2-Dichloroethane	ND	0.020	ND	0.081		1
1,2-Dichloropropane	ND	0.020	ND	0.092		1
1,3-Butadiene	ND	0.020	ND	0.044		1
1,3-Dichlorobenzene	ND	0.020	ND	0.120		1
1,4-Dichlorobenzene	ND	0.020	ND	0.120		1
Benzene	ND	0.100	ND	0.319		1
Bromodichloromethane	ND	0.010	ND	0.067		1
Bromoform	ND	0.020	ND	0.206		1
Carbon tetrachloride	0.050	0.020	0.314	0.126		1
Chlorobenzene	ND	0.020	ND	0.092		1
Chloroform	ND	0.020	ND	0.098		1
cis-1,2-Dichloroethene	ND	0.020	ND	0.079		1
Ethylbenzene	ND	0.020	ND	0.087		1
Methylene chloride	ND	0.500	ND	1.74		1
Methyl tert butyl ether	ND	0.020	ND	0.072		1
Naphthalene	ND	0.050	ND	0.260		1
Xylenes, Total	ND	0.060	ND	0.260		1
Tetrachloroethene	121	0.020	818	0.136	E	1
Toluene	0.077	0.050	0.290	0.188		1

Project Name: UNIFIRST PROPERTY IA / VI
Project Number: 1-2114-2

Lab Number: L1005229
Report Date: 04/29/10

SAMPLE RESULTS

Lab ID: L1005229-26
Client ID: SV-14
Sample Location: WOBURN, MA

Date Collected: 04/12/10 04:55
Date Received: 04/12/10
Field Prep: Not Specified

Parameter	ppbV Results	ppbV RDL	ug/m3 Results	ug/m3 RDL	Qualifier	Dilution Factor
Volatile Organics in Air by SIM - Mansfield Lab						
trans-1,2-Dichloroethene	ND	0.020	ND	0.079		1
trans-1,3-Dichloropropene	ND	0.020	ND	0.091		1
Trichloroethene	ND	0.020	ND	0.107		1
Vinyl chloride	ND	0.020	ND	0.051		1
Isopropylbenzene	ND	0.500	ND	2.46		1

Project Name: UNIFIRST PROPERTY IA / VI
Project Number: 1-2114-2

Lab Number: L1005229
Report Date: 04/29/10

SAMPLE RESULTS

Lab ID:	L1005229-26 D2	Date Collected:	04/12/10 04:55
Client ID:	SV-14	Date Received:	04/12/10
Sample Location:	WOBURN, MA	Field Prep:	Not Specified
Matrix:	Soil_Vapor		
Anaytical Method:	48,TO-15-SIM		
Analytical Date:	04/22/10 09:03		
Analyst:	AJ		

	ppbV		ug/m3			
Parameter	**Results**	**RDL**	**Results**	**RDL**	**Qualifier**	**Dilution Factor**
Volatile Organics in Air by SIM - Mansfield Lab						
Tetrachloroethene	108	0.067	735	0.452		3.333

Project Name: UNIFIRST PROPERTY IA / VI
Project Number: 1-2114-2

Lab Number: L1005229
Report Date: 04/29/10

SAMPLE RESULTS

Lab ID: L1005229-27 D
Client ID: SV-DUP01
Sample Location: WOBURN, MA
Matrix: Soil_Vapor
Anaytical Method: 48,TO-15-SIM
Analytical Date: 04/23/10 03:03
Analyst: AJ

Date Collected: 04/12/10 05:59
Date Received: 04/12/10
Field Prep: Not Specified

Parameter	ppbV Results	ppbV RDL	ug/m3 Results	ug/m3 RDL	Qualifier	Dilution Factor
Volatile Organics in Air by SIM - Mansfield Lab						
1,1,1-Trichloroethane	68.5	0.200	373	1.09		10
1,1,2-Trichloroethane	ND	0.200	ND	1.09		10
1,1-Dichloroethane	2.28	0.200	9.22	0.809		10
1,1-Dichloroethene	0.530	0.200	2.10	0.792		10
1,2,4-Trimethylbenzene	ND	0.200	ND	0.982		10
1,2-Dibromoethane	ND	0.100	ND	0.768		10
1,2-Dichloroethane	ND	0.200	ND	0.809		10
1,2-Dichloropropane	ND	0.200	ND	0.924		10
1,3-Butadiene	ND	0.200	ND	0.442		10
1,3-Dichlorobenzene	ND	0.200	ND	1.20		10
1,4-Dichlorobenzene	ND	0.200	ND	1.20		10
Benzene	ND	1.00	ND	3.19		10
Bromodichloromethane	ND	0.100	ND	0.670		10
Bromoform	ND	0.200	ND	2.06		10
Carbon tetrachloride	ND	0.200	ND	1.26		10
Chlorobenzene	0.420	0.200	1.93	0.920		10
Chloroform	3.27	0.200	16.0	0.976		10
cis-1,2-Dichloroethene	1.69	0.200	6.70	0.792		10
Ethylbenzene	ND	0.200	ND	0.868		10
Methylene chloride	ND	5.00	ND	17.4		10
Methyl tert butyl ether	ND	0.200	ND	0.720		10
Naphthalene	ND	0.500	ND	2.62		10
Xylenes, Total	ND	0.600	ND	2.60		10
Tetrachloroethene	6660	0.200	45200	1.36	E	10
Toluene	ND	0.500	ND	1.88		10

Project Name: UNIFIRST PROPERTY IA / VI
Project Number: 1-2114-2

Lab Number: L1005229
Report Date: 04/29/10

SAMPLE RESULTS

Lab ID: L1005229-27 D
Client ID: SV-DUP01
Sample Location: WOBURN, MA

Date Collected: 04/12/10 05:59
Date Received: 04/12/10
Field Prep: Not Specified

Parameter	ppbV Results	ppbV RDL	ug/m3 Results	ug/m3 RDL	Qualifier	Dilution Factor
Volatile Organics in Air by SIM - Mansfield Lab						
trans-1,2-Dichloroethene	0.260	0.200	1.03	0.792		10
trans-1,3-Dichloropropene	ND	0.200	ND	0.907		10
Trichloroethene	27.6	0.200	148	1.07		10
Vinyl chloride	ND	0.200	ND	0.511		10
Isopropylbenzene	ND	5.00	ND	24.6		10

Project Name: UNIFIRST PROPERTY IA / VI
Project Number: 1-2114-2

Lab Number: L1005229
Report Date: 04/29/10

SAMPLE RESULTS

Lab ID:	L1005229-27 D2	Date Collected:	04/12/10 05:59
Client ID:	SV-DUP01	Date Received:	04/12/10
Sample Location:	WOBURN, MA	Field Prep:	Not Specified
Matrix:	Soil_Vapor		
Anaytical Method:	48,TO-15-SIM		
Analytical Date:	04/24/10 10:48		
Analyst:	AJ		

	ppbV		ug/m3			
Parameter	**Results**	**RDL**	**Results**	**RDL**	**Qualifier**	**Dilution Factor**
Volatile Organics in Air by SIM - Mansfield Lab						
Tetrachloroethene	23000	16.2	156000	110		808

Project Name: UNIFIRST PROPERTY IA / VI
Project Number: 1-2114-2

Lab Number: L1005229
Report Date: 04/29/10

SAMPLE RESULTS

Lab ID: L1005229-28 D
Client ID: SV-13
Sample Location: WOBURN, MA
Matrix: Soil_Vapor
Anaytical Method: 48,TO-15-SIM
Analytical Date: 04/23/10 02:27
Analyst: AJ

Date Collected: 04/12/10 05:49
Date Received: 04/12/10
Field Prep: Not Specified

Parameter	ppbV Results	ppbV RDL	ug/m3 Results	ug/m3 RDL	Qualifier	Dilution Factor
Volatile Organics in Air by SIM - Mansfield Lab						
1,1,1-Trichloroethane	57.4	0.200	313	1.09		10
1,1,2-Trichloroethane	ND	0.200	ND	1.09		10
1,1-Dichloroethane	1.94	0.200	7.84	0.809		10
1,1-Dichloroethene	0.510	0.200	2.02	0.792		10
1,2,4-Trimethylbenzene	ND	0.200	ND	0.982		10
1,2-Dibromoethane	ND	0.100	ND	0.768		10
1,2-Dichloroethane	ND	0.200	ND	0.809		10
1,2-Dichloropropane	ND	0.200	ND	0.924		10
1,3-Butadiene	ND	0.200	ND	0.442		10
1,3-Dichlorobenzene	ND	0.200	ND	1.20		10
1,4-Dichlorobenzene	ND	0.200	ND	1.20		10
Benzene	ND	1.00	ND	3.19		10
Bromodichloromethane	ND	0.100	ND	0.670		10
Bromoform	ND	0.200	ND	2.06		10
Carbon tetrachloride	ND	0.200	ND	1.26		10
Chlorobenzene	0.300	0.200	1.38	0.920		10
Chloroform	2.73	0.200	13.3	0.976		10
cis-1,2-Dichloroethene	1.43	0.200	5.66	0.792		10
Ethylbenzene	ND	0.200	ND	0.868		10
Methylene chloride	ND	5.00	ND	17.4		10
Methyl tert butyl ether	ND	0.200	ND	0.720		10
Naphthalene	ND	0.500	ND	2.62		10
Xylenes, Total	ND	0.600	ND	2.60		10
Tetrachloroethene	6110	0.200	41400	1.36	E	10
Toluene	ND	0.500	ND	1.88		10

Project Name: UNIFIRST PROPERTY IA / VI
Project Number: 1-2114-2

Lab Number: L1005229
Report Date: 04/29/10

SAMPLE RESULTS

Lab ID: L1005229-28 D
Client ID: SV-13
Sample Location: WOBURN, MA

Date Collected: 04/12/10 05:49
Date Received: 04/12/10
Field Prep: Not Specified

Parameter	ppbV Results	ppbV RDL	ug/m3 Results	ug/m3 RDL	Qualifier	Dilution Factor
Volatile Organics in Air by SIM - Mansfield Lab						
trans-1,2-Dichloroethene	0.240	0.200	0.951	0.792		10
trans-1,3-Dichloropropene	ND	0.200	ND	0.907		10
Trichloroethene	22.0	0.200	118	1.07		10
Vinyl chloride	ND	0.200	ND	0.511		10
Isopropylbenzene	ND	5.00	ND	24.6		10

Project Name: UNIFIRST PROPERTY IA / VI
Project Number: 1-2114-2

Lab Number: L1005229
Report Date: 04/29/10

SAMPLE RESULTS

Lab ID:	L1005229-28 D2	Date Collected:	04/12/10 05:49
Client ID:	SV-13	Date Received:	04/12/10
Sample Location:	WOBURN, MA	Field Prep:	Not Specified
Matrix:	Soil_Vapor		
Anaytical Method:	48,TO-15-SIM		
Analytical Date:	04/24/10 10:16		
Analyst:	AJ		

	ppbV		ug/m3			
Parameter	**Results**	**RDL**	**Results**	**RDL**	**Qualifier**	**Dilution Factor**
Volatile Organics in Air by SIM - Mansfield Lab						
Tetrachloroethene	29000	14.4	196000	97.9		722.1

Project Name: UNIFIRST PROPERTY IA / VI
Project Number: 1-2114-2

Lab Number: L1005229
Report Date: 04/29/10

SAMPLE RESULTS

Lab ID: L1005229-29
Client ID: SV-03
Sample Location: WOBURN, MA
Matrix: Soil_Vapor
Anaytical Method: 48,TO-15-SIM
Analytical Date: 04/22/10 03:55
Analyst: AJ

Date Collected: 04/12/10 04:48
Date Received: 04/12/10
Field Prep: Not Specified

Parameter	ppbV Results	ppbV RDL	ug/m3 Results	ug/m3 RDL	Qualifier	Dilution Factor
Volatile Organics in Air by SIM - Mansfield Lab						
1,1,1-Trichloroethane	0.125	0.020	0.681	0.109		1
1,1,2-Trichloroethane	ND	0.020	ND	0.109		1
1,1-Dichloroethane	ND	0.020	ND	0.081		1
1,1-Dichloroethene	ND	0.020	ND	0.079		1
1,2,4-Trimethylbenzene	ND	0.020	ND	0.098		1
1,2-Dibromoethane	ND	0.010	ND	0.077		1
1,2-Dichloroethane	ND	0.020	ND	0.081		1
1,2-Dichloropropane	ND	0.020	ND	0.092		1
1,3-Butadiene	ND	0.020	ND	0.044		1
1,3-Dichlorobenzene	ND	0.020	ND	0.120		1
1,4-Dichlorobenzene	0.039	0.020	0.234	0.120		1
Benzene	ND	0.100	ND	0.319		1
Bromodichloromethane	ND	0.010	ND	0.067		1
Bromoform	ND	0.020	ND	0.206		1
Carbon tetrachloride	ND	0.020	ND	0.126		1
Chlorobenzene	ND	0.020	ND	0.092		1
Chloroform	ND	0.020	ND	0.098		1
cis-1,2-Dichloroethene	ND	0.020	ND	0.079		1
Ethylbenzene	ND	0.020	ND	0.087		1
Methylene chloride	ND	0.500	ND	1.74		1
Methyl tert butyl ether	ND	0.020	ND	0.072		1
Naphthalene	ND	0.050	ND	0.260		1
Xylenes, Total	ND	0.060	ND	0.260		1
Tetrachloroethene	37.6	0.020	255	0.136		1
Toluene	0.070	0.050	0.264	0.188		1

Project Name: UNIFIRST PROPERTY IA / VI
Project Number: 1-2114-2

Lab Number: L1005229
Report Date: 04/29/10

SAMPLE RESULTS

Lab ID: L1005229-29
Client ID: SV-03
Sample Location: WOBURN, MA

Date Collected: 04/12/10 04:48
Date Received: 04/12/10
Field Prep: Not Specified

Parameter	ppbV Results	ppbV RDL	ug/m3 Results	ug/m3 RDL	Qualifier	Dilution Factor
Volatile Organics in Air by SIM - Mansfield Lab						
trans-1,2-Dichloroethene	ND	0.020	ND	0.079		1
trans-1,3-Dichloropropene	ND	0.020	ND	0.091		1
Trichloroethene	ND	0.020	ND	0.107		1
Vinyl chloride	ND	0.020	ND	0.051		1
Isopropylbenzene	ND	0.500	ND	2.46		1

Project Name: UNIFIRST PROPERTY IA / VI
Project Number: 1-2114-2

Lab Number: L1005229
Report Date: 04/29/10

SAMPLE RESULTS

Lab ID: L1005229-30 D
Client ID: SV-15
Sample Location: WOBURN, MA
Matrix: Soil_Vapor
Anaytical Method: 48,TO-15-SIM
Analytical Date: 04/22/10 22:46
Analyst: AJ

Date Collected: 04/12/10 06:26
Date Received: 04/12/10
Field Prep: Not Specified

Parameter	ppbV Results	ppbV RDL	ug/m3 Results	ug/m3 RDL	Qualifier	Dilution Factor
Volatile Organics in Air by SIM - Mansfield Lab						
1,1,1-Trichloroethane	8.83	0.200	48.1	1.09		10
1,1,2-Trichloroethane	ND	0.200	ND	1.09		10
1,1-Dichloroethane	3.91	0.200	15.8	0.809		10
1,1-Dichloroethene	ND	0.200	ND	0.792		10
1,2,4-Trimethylbenzene	ND	0.200	ND	0.982		10
1,2-Dibromoethane	ND	0.100	ND	0.768		10
1,2-Dichloroethane	ND	0.200	ND	0.809		10
1,2-Dichloropropane	ND	0.200	ND	0.924		10
1,3-Butadiene	ND	0.200	ND	0.442		10
1,3-Dichlorobenzene	ND	0.200	ND	1.20		10
1,4-Dichlorobenzene	ND	0.200	ND	1.20		10
Benzene	ND	1.00	ND	3.19		10
Bromodichloromethane	ND	0.100	ND	0.670		10
Bromoform	ND	0.200	ND	2.06		10
Carbon tetrachloride	ND	0.200	ND	1.26		10
Chlorobenzene	ND	0.200	ND	0.920		10
Chloroform	0.780	0.200	3.80	0.976		10
cis-1,2-Dichloroethene	11.5	0.200	45.5	0.792		10
Ethylbenzene	ND	0.200	ND	0.868		10
Methylene chloride	ND	5.00	ND	17.4		10
Methyl tert butyl ether	ND	0.200	ND	0.720		10
Naphthalene	ND	0.500	ND	2.62		10
Xylenes, Total	ND	0.600	ND	2.60		10
Tetrachloroethene	1850	0.200	12500	1.36	E	10
Toluene	ND	0.500	ND	1.88		10

Project Name: UNIFIRST PROPERTY IA / VI
Project Number: 1-2114-2

Lab Number: L1005229
Report Date: 04/29/10

SAMPLE RESULTS

Lab ID: L1005229-30 D
Client ID: SV-15
Sample Location: WOBURN, MA

Date Collected: 04/12/10 06:26
Date Received: 04/12/10
Field Prep: Not Specified

Parameter	ppbV Results	ppbV RDL	ug/m3 Results	ug/m3 RDL	Qualifier	Dilution Factor
Volatile Organics in Air by SIM - Mansfield Lab						
trans-1,2-Dichloroethene	0.300	0.200	1.19	0.792		10
trans-1,3-Dichloropropene	ND	0.200	ND	0.907		10
Trichloroethene	31.2	0.200	168	1.07		10
Vinyl chloride	ND	0.200	ND	0.511		10
Isopropylbenzene	ND	5.00	ND	24.6		10

Project Name: UNIFIRST PROPERTY IA / VI
Project Number: 1-2114-2

Lab Number: L1005229
Report Date: 04/29/10

SAMPLE RESULTS

Lab ID:	L1005229-30 D2	Date Collected:	04/12/10 06:26
Client ID:	SV-15	Date Received:	04/12/10
Sample Location:	WOBURN, MA	Field Prep:	Not Specified
Matrix:	Soil_Vapor		
Anaytical Method:	48,TO-15-SIM		
Analytical Date:	04/24/10 09:11		
Analyst:	AJ		

	ppbV		ug/m3			
Parameter	**Results**	**RDL**	**Results**	**RDL**	**Qualifier**	**Dilution Factor**
Volatile Organics in Air by SIM - Mansfield Lab						
Tetrachloroethene	1350	1.39	9160	9.45		69.71

Project Name: UNIFIRST PROPERTY IA / VI
Project Number: 1-2114-2

Lab Number: L1005229
Report Date: 04/29/10

SAMPLE RESULTS

Lab ID: L1005229-31 D
Client ID: SV-12
Sample Location: WOBURN, MA
Matrix: Soil_Vapor
Anaytical Method: 48,TO-15-SIM
Analytical Date: 04/23/10 00:00
Analyst: AJ

Date Collected: 04/12/10 05:24
Date Received: 04/12/10
Field Prep: Not Specified

Parameter	ppbV Results	ppbV RDL	ug/m3 Results	ug/m3 RDL	Qualifier	Dilution Factor
Volatile Organics in Air by SIM - Mansfield Lab						
1,1,1-Trichloroethane	192	0.200	1050	1.09		10
1,1,2-Trichloroethane	ND	0.200	ND	1.09		10
1,1-Dichloroethane	0.900	0.200	3.64	0.809		10
1,1-Dichloroethene	1.52	0.200	6.02	0.792		10
1,2,4-Trimethylbenzene	ND	0.200	ND	0.982		10
1,2-Dibromoethane	ND	0.100	ND	0.768		10
1,2-Dichloroethane	ND	0.200	ND	0.809		10
1,2-Dichloropropane	ND	0.200	ND	0.924		10
1,3-Butadiene	ND	0.200	ND	0.442		10
1,3-Dichlorobenzene	ND	0.200	ND	1.20		10
1,4-Dichlorobenzene	ND	0.200	ND	1.20		10
Benzene	ND	1.00	ND	3.19		10
Bromodichloromethane	ND	0.100	ND	0.670		10
Bromoform	ND	0.200	ND	2.06		10
Carbon tetrachloride	ND	0.200	ND	1.26		10
Chlorobenzene	ND	0.200	ND	0.920		10
Chloroform	ND	0.200	ND	0.976		10
cis-1,2-Dichloroethene	0.300	0.200	1.19	0.792		10
Ethylbenzene	ND	0.200	ND	0.868		10
Methylene chloride	ND	5.00	ND	17.4		10
Methyl tert butyl ether	ND	0.200	ND	0.720		10
Naphthalene	ND	0.500	ND	2.62		10
Xylenes, Total	ND	0.600	ND	2.60		10
Tetrachloroethene	2570	0.200	17400	1.36	E	10
Toluene	ND	0.500	ND	1.88		10

Project Name: UNIFIRST PROPERTY IA / VI
Project Number: 1-2114-2

Lab Number: L1005229
Report Date: 04/29/10

SAMPLE RESULTS

Lab ID: L1005229-31 D
Client ID: SV-12
Sample Location: WOBURN, MA

Date Collected: 04/12/10 05:24
Date Received: 04/12/10
Field Prep: Not Specified

Parameter	ppbV Results	ppbV RDL	ug/m3 Results	ug/m3 RDL	Qualifier	Dilution Factor
Volatile Organics in Air by SIM - Mansfield Lab						
trans-1,2-Dichloroethene	ND	0.200	ND	0.792		10
trans-1,3-Dichloropropene	ND	0.200	ND	0.907		10
Trichloroethene	4.89	0.200	26.2	1.07		10
Vinyl chloride	ND	0.200	ND	0.511		10
Isopropylbenzene	ND	5.00	ND	24.6		10

Project Name: UNIFIRST PROPERTY IA / VI
Project Number: 1-2114-2

Lab Number: L1005229
Report Date: 04/29/10

SAMPLE RESULTS

Lab ID:	L1005229-31 D2	Date Collected:	04/12/10 05:24
Client ID:	SV-12	Date Received:	04/12/10
Sample Location:	WOBURN, MA	Field Prep:	Not Specified
Matrix:	Soil_Vapor		
Anaytical Method:	48,TO-15-SIM		
Analytical Date:	04/23/10 21:27		
Analyst:	AJ		

	ppbV		ug/m3			
Parameter	**Results**	**RDL**	**Results**	**RDL**	**Qualifier**	**Dilution Factor**
Volatile Organics in Air by SIM - Mansfield Lab						
Tetrachloroethene	2360	2.69	16000	18.2		134.7

Project Name: UNIFIRST PROPERTY IA / VI
Project Number: 1-2114-2
Lab Number: L1005229
Report Date: 04/29/10

SAMPLE RESULTS

Lab ID: L1005229-32 D
Client ID: SV-05
Sample Location: WOBURN, MA
Matrix: Soil_Vapor
Anaytical Method: 48,TO-15-SIM
Analytical Date: 04/23/10 04:54
Analyst: AJ

Date Collected: 04/12/10 05:15
Date Received: 04/12/10
Field Prep: Not Specified

Parameter	ppbV Results	ppbV RDL	ug/m3 Results	ug/m3 RDL	Qualifier	Dilution Factor
Volatile Organics in Air by SIM - Mansfield Lab						
1,1,1-Trichloroethane	169	0.200	920	1.09		10
1,1,2-Trichloroethane	ND	0.200	ND	1.09		10
1,1-Dichloroethane	ND	0.200	ND	0.809		10
1,1-Dichloroethene	ND	0.200	ND	0.792		10
1,2,4-Trimethylbenzene	ND	0.200	ND	0.982		10
1,2-Dibromoethane	ND	0.100	ND	0.768		10
1,2-Dichloroethane	ND	0.200	ND	0.809		10
1,2-Dichloropropane	ND	0.200	ND	0.924		10
1,3-Butadiene	ND	0.200	ND	0.442		10
1,3-Dichlorobenzene	ND	0.200	ND	1.20		10
1,4-Dichlorobenzene	ND	0.200	ND	1.20		10
Benzene	ND	1.00	ND	3.19		10
Bromodichloromethane	ND	0.100	ND	0.670		10
Bromoform	ND	0.200	ND	2.06		10
Carbon tetrachloride	ND	0.200	ND	1.26		10
Chlorobenzene	ND	0.200	ND	0.920		10
Chloroform	0.250	0.200	1.22	0.976		10
cis-1,2-Dichloroethene	ND	0.200	ND	0.792		10
Ethylbenzene	ND	0.200	ND	0.868		10
Methylene chloride	ND	5.00	ND	17.4		10
Methyl tert butyl ether	ND	0.200	ND	0.720		10
Naphthalene	ND	0.500	ND	2.62		10
Xylenes, Total	ND	0.600	ND	2.60		10
Tetrachloroethene	7560	0.200	51200	1.36	E	10
Toluene	ND	0.500	ND	1.88		10

Project Name: UNIFIRST PROPERTY IA / VI
Project Number: 1-2114-2

Lab Number: L1005229
Report Date: 04/29/10

SAMPLE RESULTS

Lab ID: L1005229-32 D
Client ID: SV-05
Sample Location: WOBURN, MA

Date Collected: 04/12/10 05:15
Date Received: 04/12/10
Field Prep: Not Specified

Parameter	ppbV Results	ppbV RDL	ug/m3 Results	ug/m3 RDL	Qualifier	Dilution Factor
Volatile Organics in Air by SIM - Mansfield Lab						
trans-1,2-Dichloroethene	ND	0.200	ND	0.792		10
trans-1,3-Dichloropropene	ND	0.200	ND	0.907		10
Trichloroethene	1.34	0.200	7.20	1.07		10
Vinyl chloride	ND	0.200	ND	0.511		10
Isopropylbenzene	ND	5.00	ND	24.6		10

Project Name: UNIFIRST PROPERTY IA / VI
Project Number: 1-2114-2

Lab Number: L1005229
Report Date: 04/29/10

SAMPLE RESULTS

Lab ID:	L1005229-32 D2	Date Collected:	04/12/10 05:15
Client ID:	SV-05	Date Received:	04/12/10
Sample Location:	WOBURN, MA	Field Prep:	Not Specified
Matrix:	Soil_Vapor		
Anaytical Method:	48,TO-15-SIM		
Analytical Date:	04/24/10 02:21		
Analyst:	AJ		

Parameter	ppbV Results	ppbV RDL	ug/m3 Results	ug/m3 RDL	Qualifier	Dilution Factor
Volatile Organics in Air by SIM - Mansfield Lab						
Tetrachloroethene	30000	20.2	203000	137		1012

Project Name: UNIFIRST PROPERTY IA / VI
Project Number: 1-2114-2

Lab Number: L1005229
Report Date: 04/29/10

SAMPLE RESULTS

Lab ID: L1005229-33 D
Client ID: SV-10
Sample Location: WOBURN, MA
Matrix: Soil_Vapor
Anaytical Method: 48,TO-15-SIM
Analytical Date: 04/23/10 04:17
Analyst: AJ

Date Collected: 04/12/10 05:14
Date Received: 04/12/10
Field Prep: Not Specified

Parameter	ppbV Results	ppbV RDL	ug/m3 Results	ug/m3 RDL	Qualifier	Dilution Factor
Volatile Organics in Air by SIM - Mansfield Lab						
1,1,1-Trichloroethane	48.6	0.200	265	1.09		10
1,1,2-Trichloroethane	ND	0.200	ND	1.09		10
1,1-Dichloroethane	0.380	0.200	1.54	0.809		10
1,1-Dichloroethene	ND	0.200	ND	0.792		10
1,2,4-Trimethylbenzene	ND	0.200	ND	0.982		10
1,2-Dibromoethane	ND	0.100	ND	0.768		10
1,2-Dichloroethane	ND	0.200	ND	0.809		10
1,2-Dichloropropane	ND	0.200	ND	0.924		10
1,3-Butadiene	ND	0.200	ND	0.442		10
1,3-Dichlorobenzene	ND	0.200	ND	1.20		10
1,4-Dichlorobenzene	ND	0.200	ND	1.20		10
Benzene	ND	1.00	ND	3.19		10
Bromodichloromethane	ND	0.100	ND	0.670		10
Bromoform	ND	0.200	ND	2.06		10
Carbon tetrachloride	ND	0.200	ND	1.26		10
Chlorobenzene	ND	0.200	ND	0.920		10
Chloroform	1.85	0.200	9.02	0.976		10
cis-1,2-Dichloroethene	ND	0.200	ND	0.792		10
Ethylbenzene	ND	0.200	ND	0.868		10
Methylene chloride	ND	5.00	ND	17.4		10
Methyl tert butyl ether	ND	0.200	ND	0.720		10
Naphthalene	ND	0.500	ND	2.62		10
Xylenes, Total	ND	0.600	ND	2.60		10
Tetrachloroethene	7190	0.200	48700	1.36	E	10
Toluene	ND	0.500	ND	1.88		10

Project Name: UNIFIRST PROPERTY IA / VI
Project Number: 1-2114-2

Lab Number: L1005229
Report Date: 04/29/10

SAMPLE RESULTS

Lab ID: L1005229-33 D
Client ID: SV-10
Sample Location: WOBURN, MA

Date Collected: 04/12/10 05:14
Date Received: 04/12/10
Field Prep: Not Specified

Parameter	ppbV Results	ppbV RDL	ug/m3 Results	ug/m3 RDL	Qualifier	Dilution Factor
Volatile Organics in Air by SIM - Mansfield Lab						
trans-1,2-Dichloroethene	ND	0.200	ND	0.792		10
trans-1,3-Dichloropropene	ND	0.200	ND	0.907		10
Trichloroethene	2.72	0.200	14.6	1.07		10
Vinyl chloride	ND	0.200	ND	0.511		10
Isopropylbenzene	ND	5.00	ND	24.6		10

Project Name: UNIFIRST PROPERTY IA / VI
Project Number: 1-2114-2

Lab Number: L1005229
Report Date: 04/29/10

SAMPLE RESULTS

Lab ID:	L1005229-33 D2	Date Collected:	04/12/10 05:14
Client ID:	SV-10	Date Received:	04/12/10
Sample Location:	WOBURN, MA	Field Prep:	Not Specified
Matrix:	Soil_Vapor		
Anaytical Method:	48,TO-15-SIM		
Analytical Date:	04/24/10 01:44		
Analyst:	AJ		

Parameter	ppbV Results	ppbV RDL	ug/m3 Results	ug/m3 RDL	Qualifier	Dilution Factor
Volatile Organics in Air by SIM - Mansfield Lab						
Tetrachloroethene	31600	19.4	214000	131		968.2

Project Name: UNIFIRST PROPERTY IA / VI
Project Number: 1-2114-2

Lab Number: L1005229
Report Date: 04/29/10

SAMPLE RESULTS

Lab ID: L1005229-34 D
Client ID: SV-DUP02
Sample Location: WOBURN, MA
Matrix: Soil_Vapor
Anaytical Method: 48,TO-15-SIM
Analytical Date: 04/23/10 01:14
Analyst: AJ

Date Collected: 04/12/10 06:12
Date Received: 04/12/10
Field Prep: Not Specified

Parameter	ppbV Results	ppbV RDL	ug/m3 Results	ug/m3 RDL	Qualifier	Dilution Factor
Volatile Organics in Air by SIM - Mansfield Lab						
1,1,1-Trichloroethane	12.4	0.188	67.8	1.02		9.404
1,1,2-Trichloroethane	ND	0.188	ND	1.02		9.404
1,1-Dichloroethane	0.263	0.188	1.06	0.761		9.404
1,1-Dichloroethene	ND	0.188	ND	0.745		9.404
1,2,4-Trimethylbenzene	ND	0.188	ND	0.924		9.404
1,2-Dibromoethane	ND	0.094	ND	0.722		9.404
1,2-Dichloroethane	ND	0.188	ND	0.761		9.404
1,2-Dichloropropane	ND	0.188	ND	0.868		9.404
1,3-Butadiene	ND	0.188	ND	0.416		9.404
1,3-Dichlorobenzene	ND	0.188	ND	1.13		9.404
1,4-Dichlorobenzene	ND	0.188	ND	1.13		9.404
Benzene	ND	0.940	ND	3.00		9.404
Bromodichloromethane	ND	0.094	ND	0.630		9.404
Bromoform	ND	0.188	ND	1.94		9.404
Carbon tetrachloride	ND	0.188	ND	1.18		9.404
Chlorobenzene	ND	0.188	ND	0.865		9.404
Chloroform	0.367	0.188	1.79	0.918		9.404
cis-1,2-Dichloroethene	49.1	0.188	194	0.745		9.404
Ethylbenzene	ND	0.188	ND	0.816		9.404
Methylene chloride	ND	4.70	ND	16.3		9.404
Methyl tert butyl ether	ND	0.188	ND	0.678		9.404
Naphthalene	ND	0.470	ND	2.46		9.404
Xylenes, Total	ND	0.564	ND	2.45		9.404
Tetrachloroethene	2660	0.188	18000	1.27	E	9.404
Toluene	ND	0.470	ND	1.77		9.404

Project Name: UNIFIRST PROPERTY IA / VI
Project Number: 1-2114-2
Lab Number: L1005229
Report Date: 04/29/10

SAMPLE RESULTS

Lab ID: L1005229-34 D
Client ID: SV-DUP02
Sample Location: WOBURN, MA
Date Collected: 04/12/10 06:12
Date Received: 04/12/10
Field Prep: Not Specified

Parameter	ppbV Results	ppbV RDL	ug/m3 Results	ug/m3 RDL	Qualifier	Dilution Factor
Volatile Organics in Air by SIM - Mansfield Lab						
trans-1,2-Dichloroethene	0.348	0.188	1.38	0.745		9.404
trans-1,3-Dichloropropene	ND	0.188	ND	0.853		9.404
Trichloroethene	83.6	0.188	449	1.01		9.404
Vinyl chloride	ND	0.188	ND	0.480		9.404
Isopropylbenzene	ND	4.70	ND	23.1		9.404

Project Name: UNIFIRST PROPERTY IA / VI
Project Number: 1-2114-2

Lab Number: L1005229
Report Date: 04/29/10

SAMPLE RESULTS

Lab ID:	L1005229-34 D2	Date Collected:	04/12/10 06:12
Client ID:	SV-DUP02	Date Received:	04/12/10
Sample Location:	WOBURN, MA	Field Prep:	Not Specified
Matrix:	Soil_Vapor		
Anaytical Method:	48,TO-15-SIM		
Analytical Date:	04/23/10 22:41		
Analyst:	AJ		

	ppbV		ug/m3			
Parameter	**Results**	**RDL**	**Results**	**RDL**	**Qualifier**	**Dilution Factor**
Volatile Organics in Air by SIM - Mansfield Lab						
Tetrachloroethene	3330	2.51	22600	17.0		125.4

Project Name: UNIFIRST PROPERTY IA / VI
Project Number: 1-2114-2

Lab Number: L1005229
Report Date: 04/29/10

SAMPLE RESULTS

Lab ID: L1005229-35 D
Client ID: SV-09
Sample Location: WOBURN, MA
Matrix: Soil_Vapor
Anaytical Method: 48,TO-15-SIM
Analytical Date: 04/23/10 01:50
Analyst: AJ

Date Collected: 04/12/10 04:47
Date Received: 04/12/10
Field Prep: Not Specified

Parameter	ppbV Results	ppbV RDL	ug/m3 Results	ug/m3 RDL	Qualifier	Dilution Factor
Volatile Organics in Air by SIM - Mansfield Lab						
1,1,1-Trichloroethane	6.10	0.200	33.2	1.09		10
1,1,2-Trichloroethane	ND	0.200	ND	1.09		10
1,1-Dichloroethane	ND	0.200	ND	0.809		10
1,1-Dichloroethene	ND	0.200	ND	0.792		10
1,2,4-Trimethylbenzene	ND	0.200	ND	0.982		10
1,2-Dibromoethane	ND	0.100	ND	0.768		10
1,2-Dichloroethane	ND	0.200	ND	0.809		10
1,2-Dichloropropane	ND	0.200	ND	0.924		10
1,3-Butadiene	ND	0.200	ND	0.442		10
1,3-Dichlorobenzene	ND	0.200	ND	1.20		10
1,4-Dichlorobenzene	ND	0.200	ND	1.20		10
Benzene	ND	1.00	ND	3.19		10
Bromodichloromethane	ND	0.100	ND	0.670		10
Bromoform	ND	0.200	ND	2.06		10
Carbon tetrachloride	ND	0.200	ND	1.26		10
Chlorobenzene	ND	0.200	ND	0.920		10
Chloroform	ND	0.200	ND	0.976		10
cis-1,2-Dichloroethene	ND	0.200	ND	0.792		10
Ethylbenzene	ND	0.200	ND	0.868		10
Methylene chloride	ND	5.00	ND	17.4		10
Methyl tert butyl ether	ND	0.200	ND	0.720		10
Naphthalene	ND	0.500	ND	2.62		10
Xylenes, Total	ND	0.600	ND	2.60		10
Tetrachloroethene	3300	0.200	22300	1.36	E	10
Toluene	ND	0.500	ND	1.88		10

Project Name: UNIFIRST PROPERTY IA / VI
Project Number: 1-2114-2
Lab Number: L1005229
Report Date: 04/29/10

SAMPLE RESULTS

Lab ID: L1005229-35 D
Client ID: SV-09
Sample Location: WOBURN, MA

Date Collected: 04/12/10 04:47
Date Received: 04/12/10
Field Prep: Not Specified

Parameter	ppbV Results	ppbV RDL	ug/m3 Results	ug/m3 RDL	Qualifier	Dilution Factor
Volatile Organics in Air by SIM - Mansfield Lab						
trans-1,2-Dichloroethene	ND	0.200	ND	0.792		10
trans-1,3-Dichloropropene	ND	0.200	ND	0.907		10
Trichloroethene	0.840	0.200	4.51	1.07		10
Vinyl chloride	ND	0.200	ND	0.511		10
Isopropylbenzene	ND	5.00	ND	24.6		10

Project Name: UNIFIRST PROPERTY IA / VI
Project Number: 1-2114-2

Lab Number: L1005229
Report Date: 04/29/10

SAMPLE RESULTS

Lab ID:	L1005229-35 D2	Date Collected:	04/12/10 04:47
Client ID:	SV-09	Date Received:	04/12/10
Sample Location:	WOBURN, MA	Field Prep:	Not Specified
Matrix:	Soil_Vapor		
Anaytical Method:	48,TO-15-SIM		
Analytical Date:	04/23/10 23:18		
Analyst:	AJ		

	ppbV		ug/m3			
Parameter	**Results**	**RDL**	**Results**	**RDL**	**Qualifier**	**Dilution Factor**
Volatile Organics in Air by SIM - Mansfield Lab						
Tetrachloroethene	3700	2.57	25100	17.4		128.3

Project Name: UNIFIRST PROPERTY IA / VI
Project Number: 1-2114-2

Lab Number: L1005229
Report Date: 04/29/10

SAMPLE RESULTS

Lab ID:	L1005229-36	Date Collected:	04/12/10 04:37
Client ID:	SV-01	Date Received:	04/12/10
Sample Location:	WOBURN, MA	Field Prep:	Not Specified
Matrix:	Soil_Vapor		
Anaytical Method:	48,TO-15-SIM		
Analytical Date:	04/22/10 02:01		
Analyst:	AJ		

Parameter	ppbV Results	ppbV RDL	ug/m3 Results	ug/m3 RDL	Qualifier	Dilution Factor
Volatile Organics in Air by SIM - Mansfield Lab						
1,1,1-Trichloroethane	0.043	0.020	0.234	0.109		1
1,1,2-Trichloroethane	ND	0.020	ND	0.109		1
1,1-Dichloroethane	ND	0.020	ND	0.081		1
1,1-Dichloroethene	ND	0.020	ND	0.079		1
1,2,4-Trimethylbenzene	ND	0.020	ND	0.098		1
1,2-Dibromoethane	ND	0.010	ND	0.077		1
1,2-Dichloroethane	ND	0.020	ND	0.081		1
1,2-Dichloropropane	ND	0.020	ND	0.092		1
1,3-Butadiene	ND	0.020	ND	0.044		1
1,3-Dichlorobenzene	ND	0.020	ND	0.120		1
1,4-Dichlorobenzene	0.057	0.020	0.342	0.120		1
Benzene	ND	0.100	ND	0.319		1
Bromodichloromethane	ND	0.010	ND	0.067		1
Bromoform	ND	0.020	ND	0.206		1
Carbon tetrachloride	ND	0.020	ND	0.126		1
Chlorobenzene	ND	0.020	ND	0.092		1
Chloroform	0.175	0.020	0.854	0.098		1
cis-1,2-Dichloroethene	ND	0.020	ND	0.079		1
Ethylbenzene	0.020	0.020	ND	0.087		1
Methylene chloride	ND	0.500	ND	1.74		1
Methyl tert butyl ether	ND	0.020	ND	0.072		1
Naphthalene	ND	0.050	ND	0.260		1
Xylenes, Total	0.086	0.060	0.373	0.260		1
Tetrachloroethene	10.0	0.020	68.0	0.136		1
Toluene	0.137	0.050	0.516	0.188		1

Project Name: UNIFIRST PROPERTY IA / VI
Project Number: 1-2114-2

Lab Number: L1005229
Report Date: 04/29/10

SAMPLE RESULTS

Lab ID: L1005229-36
Client ID: SV-01
Sample Location: WOBURN, MA

Date Collected: 04/12/10 04:37
Date Received: 04/12/10
Field Prep: Not Specified

Parameter	ppbV Results	ppbV RDL	ug/m3 Results	ug/m3 RDL	Qualifier	Dilution Factor
Volatile Organics in Air by SIM - Mansfield Lab						
trans-1,2-Dichloroethene	ND	0.020	ND	0.079		1
trans-1,3-Dichloropropene	ND	0.020	ND	0.091		1
Trichloroethene	ND	0.020	ND	0.107		1
Vinyl chloride	ND	0.020	ND	0.051		1
Isopropylbenzene	ND	0.500	ND	2.46		1

Project Name: UNIFIRST PROPERTY IA / VI
Project Number: 1-2114-2

Lab Number: L1005229
Report Date: 04/29/10

SAMPLE RESULTS

Lab ID: L1005229-37
Client ID: SV-08
Sample Location: WOBURN, MA
Matrix: Soil_Vapor
Anaytical Method: 48,TO-15-SIM
Analytical Date: 04/22/10 07:05
Analyst: AJ

Date Collected: 04/12/10 06:32
Date Received: 04/12/10
Field Prep: Not Specified

Parameter	ppbV Results	ppbV RDL	ug/m3 Results	ug/m3 RDL	Qualifier	Dilution Factor
Volatile Organics in Air by SIM - Mansfield Lab						
1,1,1-Trichloroethane	0.520	0.020	2.84	0.109		1
1,1,2-Trichloroethane	ND	0.020	ND	0.109		1
1,1-Dichloroethane	ND	0.020	ND	0.081		1
1,1-Dichloroethene	ND	0.020	ND	0.079		1
1,2,4-Trimethylbenzene	ND	0.020	ND	0.098		1
1,2-Dibromoethane	ND	0.010	ND	0.077		1
1,2-Dichloroethane	ND	0.020	ND	0.081		1
1,2-Dichloropropane	ND	0.020	ND	0.092		1
1,3-Butadiene	ND	0.020	ND	0.044		1
1,3-Dichlorobenzene	ND	0.020	ND	0.120		1
1,4-Dichlorobenzene	ND	0.020	ND	0.120		1
Benzene	ND	0.100	ND	0.319		1
Bromodichloromethane	0.011	0.010	0.074	0.067		1
Bromoform	ND	0.020	ND	0.206		1
Carbon tetrachloride	0.045	0.020	0.283	0.126		1
Chlorobenzene	ND	0.020	ND	0.092		1
Chloroform	1.59	0.020	7.74	0.098		1
cis-1,2-Dichloroethene	ND	0.020	ND	0.079		1
Ethylbenzene	ND	0.020	ND	0.087		1
Methylene chloride	ND	0.500	ND	1.74		1
Methyl tert butyl ether	ND	0.020	ND	0.072		1
Naphthalene	ND	0.050	ND	0.260		1
Xylenes, Total	ND	0.060	ND	0.260		1
Tetrachloroethene	315	0.020	2140	0.136	E	1
Toluene	0.085	0.050	0.320	0.188		1

Project Name: UNIFIRST PROPERTY IA / VI
Project Number: 1-2114-2

Lab Number: L1005229
Report Date: 04/29/10

SAMPLE RESULTS

Lab ID: L1005229-37
Client ID: SV-08
Sample Location: WOBURN, MA

Date Collected: 04/12/10 06:32
Date Received: 04/12/10
Field Prep: Not Specified

Parameter	ppbV Results	ppbV RDL	ug/m3 Results	ug/m3 RDL	Qualifier	Dilution Factor
Volatile Organics in Air by SIM - Mansfield Lab						
trans-1,2-Dichloroethene	ND	0.020	ND	0.079		1
trans-1,3-Dichloropropene	ND	0.020	ND	0.091		1
Trichloroethene	0.046	0.020	0.247	0.107		1
Vinyl chloride	ND	0.020	ND	0.051		1
Isopropylbenzene	ND	0.500	ND	2.46		1

Project Name: UNIFIRST PROPERTY IA / VI
Project Number: 1-2114-2

Lab Number: L1005229
Report Date: 04/29/10

SAMPLE RESULTS

Lab ID:	L1005229-37 D2	Date Collected:	04/12/10 06:32
Client ID:	SV-08	Date Received:	04/12/10
Sample Location:	WOBURN, MA	Field Prep:	Not Specified
Matrix:	Soil_Vapor		
Anaytical Method:	48,TO-15-SIM		
Analytical Date:	04/22/10 12:09		
Analyst:	AJ		

	ppbV		ug/m3			
Parameter	**Results**	**RDL**	**Results**	**RDL**	**Qualifier**	**Dilution Factor**
Volatile Organics in Air by SIM - Mansfield Lab						
Tetrachloroethene	578	0.477	3920	3.23		23.86

Project Name: UNIFIRST PROPERTY IA / VI
Project Number: 1-2114-2

Lab Number: L1005229
Report Date: 04/29/10

SAMPLE RESULTS

Lab ID: L1005229-38
Client ID: TRIP BLANK
Sample Location: WOBURN, MA
Matrix: Air
Anaytical Method: 48,TO-15-SIM
Analytical Date: 04/22/10 01:22
Analyst: AJ

Date Collected:
Date Received: 04/12/10
Field Prep: Not Specified

Parameter	ppbV Results	ppbV RDL	ug/m3 Results	ug/m3 RDL	Qualifier	Dilution Factor
Volatile Organics in Air by SIM - Mansfield Lab						
1,1,1-Trichloroethane	ND	0.020	ND	0.109		1
1,1,2-Trichloroethane	ND	0.020	ND	0.109		1
1,1-Dichloroethane	ND	0.020	ND	0.081		1
1,1-Dichloroethene	ND	0.020	ND	0.079		1
1,2,4-Trimethylbenzene	ND	0.020	ND	0.098		1
1,2-Dibromoethane	ND	0.010	ND	0.077		1
1,2-Dichloroethane	ND	0.020	ND	0.081		1
1,2-Dichloropropane	ND	0.020	ND	0.092		1
1,3-Butadiene	ND	0.020	ND	0.044		1
1,3-Dichlorobenzene	ND	0.020	ND	0.120		1
1,4-Dichlorobenzene	ND	0.020	ND	0.120		1
Benzene	ND	0.100	ND	0.319		1
Bromodichloromethane	ND	0.010	ND	0.067		1
Bromoform	ND	0.020	ND	0.206		1
Carbon tetrachloride	ND	0.020	ND	0.126		1
Chlorobenzene	ND	0.020	ND	0.092		1
Chloroform	ND	0.020	ND	0.098		1
cis-1,2-Dichloroethene	ND	0.020	ND	0.079		1
Ethylbenzene	ND	0.020	ND	0.087		1
Methylene chloride	ND	0.500	ND	1.74		1
Methyl tert butyl ether	ND	0.020	ND	0.072		1
Naphthalene	ND	0.050	ND	0.260		1
Xylenes, Total	ND	0.060	ND	0.260		1
Tetrachloroethene	0.108	0.020	0.732	0.136		1
Toluene	ND	0.050	ND	0.188		1

Project Name: UNIFIRST PROPERTY IA / VI
Project Number: 1-2114-2

Lab Number: L1005229
Report Date: 04/29/10

SAMPLE RESULTS

Lab ID: L1005229-38
Client ID: TRIP BLANK
Sample Location: WOBURN, MA

Date Collected:
Date Received: 04/12/10
Field Prep: Not Specified

Parameter	ppbV Results	ppbV RDL	ug/m3 Results	ug/m3 RDL	Qualifier	Dilution Factor
Volatile Organics in Air by SIM - Mansfield Lab						
trans-1,2-Dichloroethene	ND	0.020	ND	0.079		1
trans-1,3-Dichloropropene	ND	0.020	ND	0.091		1
Trichloroethene	ND	0.020	ND	0.107		1
Vinyl chloride	ND	0.020	ND	0.051		1
Isopropylbenzene	ND	0.500	ND	2.46		1

Project Name: UNIFIRST PROPERTY IA / VI
Project Number: 1-2114-2

Lab Number: L1005229
Report Date: 04/29/10

SAMPLE RESULTS

Lab ID: L1005229-39 D
Client ID: SV-06
Sample Location: WOBURN, MA
Matrix: Soil_Vapor
Anaytical Method: 48,TO-15-SIM
Analytical Date: 04/23/10 05:30
Analyst: AJ

Date Collected: 04/12/10 05:22
Date Received: 04/12/10
Field Prep: Not Specified

Parameter	ppbV Results	ppbV RDL	ug/m3 Results	ug/m3 RDL	Qualifier	Dilution Factor
Volatile Organics in Air by SIM - Mansfield Lab						
1,1,1-Trichloroethane	265	0.200	1440	1.09		10
1,1,2-Trichloroethane	ND	0.200	ND	1.09		10
1,1-Dichloroethane	0.200	0.200	0.809	0.809		10
1,1-Dichloroethene	0.220	0.200	0.872	0.792		10
1,2,4-Trimethylbenzene	0.340	0.200	1.67	0.982		10
1,2-Dibromoethane	ND	0.100	ND	0.768		10
1,2-Dichloroethane	ND	0.200	ND	0.809		10
1,2-Dichloropropane	ND	0.200	ND	0.924		10
1,3-Butadiene	ND	0.200	ND	0.442		10
1,3-Dichlorobenzene	ND	0.200	ND	1.20		10
1,4-Dichlorobenzene	ND	0.200	ND	1.20		10
Benzene	ND	1.00	ND	3.19		10
Bromodichloromethane	ND	0.100	ND	0.670		10
Bromoform	ND	0.200	ND	2.06		10
Carbon tetrachloride	ND	0.200	ND	1.26		10
Chlorobenzene	0.330	0.200	1.52	0.920		10
Chloroform	3.41	0.200	16.6	0.976		10
cis-1,2-Dichloroethene	ND	0.200	ND	0.792		10
Ethylbenzene	ND	0.200	ND	0.868		10
Methylene chloride	ND	5.00	ND	17.4		10
Methyl tert butyl ether	ND	0.200	ND	0.720		10
Naphthalene	ND	0.500	ND	2.62		10
Xylenes, Total	ND	0.600	ND	2.60		10
Tetrachloroethene	8920	0.200	60400	1.36	E	10
Toluene	ND	0.500	ND	1.88		10

Project Name: UNIFIRST PROPERTY IA / VI
Project Number: 1-2114-2

Lab Number: L1005229
Report Date: 04/29/10

SAMPLE RESULTS

Lab ID: L1005229-39 D
Client ID: SV-06
Sample Location: WOBURN, MA

Date Collected: 04/12/10 05:22
Date Received: 04/12/10
Field Prep: Not Specified

Parameter	ppbV Results	ppbV RDL	ug/m3 Results	ug/m3 RDL	Qualifier	Dilution Factor
Volatile Organics in Air by SIM - Mansfield Lab						
trans-1,2-Dichloroethene	ND	0.200	ND	0.792		10
trans-1,3-Dichloropropene	ND	0.200	ND	0.907		10
Trichloroethene	97.2	0.200	522	1.07		10
Vinyl chloride	ND	0.200	ND	0.511		10
Isopropylbenzene	ND	5.00	ND	24.6		10

Project Name: UNIFIRST PROPERTY IA / VI
Project Number: 1-2114-2

Lab Number: L1005229
Report Date: 04/29/10

SAMPLE RESULTS

Lab ID:	L1005229-39 D2	Date Collected:	04/12/10 05:22
Client ID:	SV-06	Date Received:	04/12/10
Sample Location:	WOBURN, MA	Field Prep:	Not Specified
Matrix:	Soil_Vapor		
Anaytical Method:	48,TO-15-SIM		
Analytical Date:	04/26/10 17:02		
Analyst:	AJ		

Parameter	ppbV Results	ppbV RDL	ug/m3 Results	ug/m3 RDL	Qualifier	Dilution Factor
Volatile Organics in Air by SIM - Mansfield Lab						
Tetrachloroethene	62000	56.4	420000	382		2822

Project Name: UNIFIRST PROPERTY IA / VI
Project Number: 1-2114-2

Lab Number: L1005229
Report Date: 04/29/10

SAMPLE RESULTS

Lab ID: L1005229-40 D
Client ID: SV-02
Sample Location: WOBURN, MA
Matrix: Soil_Vapor
Anaytical Method: 48,TO-15-SIM
Analytical Date: 04/22/10 04:34
Analyst: AJ

Date Collected: 04/12/10 07:55
Date Received: 04/12/10
Field Prep: Not Specified

Parameter	ppbV Results	ppbV RDL	ug/m3 Results	ug/m3 RDL	Qualifier	Dilution Factor
Volatile Organics in Air by SIM - Mansfield Lab						
1,1,1-Trichloroethane	0.123	0.055	0.670	0.298		2.733
1,1,2-Trichloroethane	ND	0.055	ND	0.298		2.733
1,1-Dichloroethane	ND	0.055	ND	0.221		2.733
1,1-Dichloroethene	ND	0.055	ND	0.216		2.733
1,2,4-Trimethylbenzene	0.169	0.055	0.832	0.268		2.733
1,2-Dibromoethane	ND	0.027	ND	0.210		2.733
1,2-Dichloroethane	ND	0.055	ND	0.221		2.733
1,2-Dichloropropane	ND	0.055	ND	0.252		2.733
1,3-Butadiene	ND	0.055	ND	0.121		2.733
1,3-Dichlorobenzene	ND	0.055	ND	0.328		2.733
1,4-Dichlorobenzene	0.191	0.055	1.15	0.328		2.733
Benzene	0.273	0.273	0.872	0.872		2.733
Bromodichloromethane	ND	0.027	ND	0.183		2.733
Bromoform	ND	0.055	ND	0.564		2.733
Carbon tetrachloride	ND	0.055	ND	0.344		2.733
Chlorobenzene	ND	0.055	ND	0.251		2.733
Chloroform	0.205	0.055	1.00	0.267		2.733
cis-1,2-Dichloroethene	ND	0.055	ND	0.216		2.733
Ethylbenzene	0.123	0.055	0.534	0.237		2.733
Methylene chloride	ND	1.37	ND	4.74		2.733
Methyl tert butyl ether	0.071	0.055	0.256	0.197		2.733
Naphthalene	0.202	0.137	1.06	0.720		2.733
Xylenes, Total	0.664	0.164	2.88	0.711		2.733
Tetrachloroethene	136	0.055	923	0.370		2.733
Toluene	0.825	0.137	3.11	0.514		2.733

Project Name: UNIFIRST PROPERTY IA / VI
Project Number: 1-2114-2

Lab Number: L1005229
Report Date: 04/29/10

SAMPLE RESULTS

Lab ID: L1005229-40 D
Client ID: SV-02
Sample Location: WOBURN, MA

Date Collected: 04/12/10 07:55
Date Received: 04/12/10
Field Prep: Not Specified

Parameter	ppbV Results	ppbV RDL	ug/m3 Results	ug/m3 RDL	Qualifier	Dilution Factor
Volatile Organics in Air by SIM - Mansfield Lab						
trans-1,2-Dichloroethene	ND	0.055	ND	0.216		2.733
trans-1,3-Dichloropropene	ND	0.055	ND	0.248		2.733
Trichloroethene	ND	0.055	ND	0.293		2.733
Vinyl chloride	ND	0.055	ND	0.140		2.733
Isopropylbenzene	ND	1.37	ND	6.71		2.733

Project Name: UNIFIRST PROPERTY IA / VI
Project Number: 1-2114-2

Lab Number: L1005229
Report Date: 04/29/10

SAMPLE RESULTS

Lab ID: L1005229-41 D
Client ID: SV-11
Sample Location: WOBURN, MA
Matrix: Soil_Vapor
Anaytical Method: 48,TO-15-SIM
Analytical Date: 04/23/10 00:36
Analyst: AJ

Date Collected: 04/12/10 06:02
Date Received: 04/12/10
Field Prep: Not Specified

Parameter	ppbV Results	ppbV RDL	ug/m3 Results	ug/m3 RDL	Qualifier	Dilution Factor
Volatile Organics in Air by SIM - Mansfield Lab						
1,1,1-Trichloroethane	15.7	0.200	85.8	1.09		10
1,1,2-Trichloroethane	ND	0.200	ND	1.09		10
1,1-Dichloroethane	0.340	0.200	1.38	0.809		10
1,1-Dichloroethene	ND	0.200	ND	0.792		10
1,2,4-Trimethylbenzene	ND	0.200	ND	0.982		10
1,2-Dibromoethane	ND	0.100	ND	0.768		10
1,2-Dichloroethane	ND	0.200	ND	0.809		10
1,2-Dichloropropane	ND	0.200	ND	0.924		10
1,3-Butadiene	ND	0.200	ND	0.442		10
1,3-Dichlorobenzene	ND	0.200	ND	1.20		10
1,4-Dichlorobenzene	ND	0.200	ND	1.20		10
Benzene	ND	1.00	ND	3.19		10
Bromodichloromethane	ND	0.100	ND	0.670		10
Bromoform	ND	0.200	ND	2.06		10
Carbon tetrachloride	ND	0.200	ND	1.26		10
Chlorobenzene	ND	0.200	ND	0.920		10
Chloroform	0.300	0.200	1.46	0.976		10
cis-1,2-Dichloroethene	62.7	0.200	248	0.792		10
Ethylbenzene	ND	0.200	ND	0.868		10
Methylene chloride	ND	5.00	ND	17.4		10
Methyl tert butyl ether	ND	0.200	ND	0.720		10
Naphthalene	ND	0.500	ND	2.62		10
Xylenes, Total	ND	0.600	ND	2.60		10
Tetrachloroethene	3070	0.200	20800	1.36	E	10
Toluene	ND	0.500	ND	1.88		10

Project Name: UNIFIRST PROPERTY IA / VI
Project Number: 1-2114-2

Lab Number: L1005229
Report Date: 04/29/10

SAMPLE RESULTS

Lab ID: L1005229-41 D
Client ID: SV-11
Sample Location: WOBURN, MA

Date Collected: 04/12/10 06:02
Date Received: 04/12/10
Field Prep: Not Specified

Parameter	ppbV Results	ppbV RDL	ug/m3 Results	ug/m3 RDL	Qualifier	Dilution Factor
Volatile Organics in Air by SIM - Mansfield Lab						
trans-1,2-Dichloroethene	0.460	0.200	1.82	0.792		10
trans-1,3-Dichloropropene	ND	0.200	ND	0.907		10
Trichloroethene	106	0.200	569	1.07		10
Vinyl chloride	ND	0.200	ND	0.511		10
Isopropylbenzene	ND	5.00	ND	24.6		10

Project Name: UNIFIRST PROPERTY IA / VI
Project Number: 1-2114-2

Lab Number: L1005229
Report Date: 04/29/10

SAMPLE RESULTS

Lab ID:	L1005229-41 D2	Date Collected:	04/12/10 06:02
Client ID:	SV-11	Date Received:	04/12/10
Sample Location:	WOBURN, MA	Field Prep:	Not Specified
Matrix:	Soil_Vapor		
Anaytical Method:	48,TO-15-SIM		
Analytical Date:	04/23/10 22:04		
Analyst:	AJ		

	ppbV		ug/m3			
Parameter	**Results**	**RDL**	**Results**	**RDL**	**Qualifier**	**Dilution Factor**
Volatile Organics in Air by SIM - Mansfield Lab						
Tetrachloroethene	3770	2.49	25500	16.8		124.3

Project Name: UNIFIRST PROPERTY IA / VI **Lab Number:** L1005229

Project Number: 1-2114-2 **Report Date:** 04/29/10

Method Blank Analysis
Batch Quality Control

Analytical Method: 48,TO-15-SIM
Analytical Date: 04/20/10 22:42

Parameter	ppbV Results	ppbV RDL	ug/m3 Results	ug/m3 RDL	Qualifier	Dilution Factor
Volatile Organics in Air by SIM - Mansfield Lab for sample(s): 01-11,13-21 Batch: WG409045-4						
1,1,1-Trichloroethane	ND	0.020	ND	0.109		1
1,1,2-Trichloroethane	ND	0.020	ND	0.109		1
1,1-Dichloroethane	ND	0.020	ND	0.081		1
1,1-Dichloroethene	ND	0.020	ND	0.079		1
1,2,4-Trimethylbenzene	ND	0.020	ND	0.098		1
1,2-Dibromoethane	ND	0.010	ND	0.077		1
1,2-Dichloroethane	ND	0.020	ND	0.081		1
1,2-Dichloropropane	ND	0.020	ND	0.092		1
1,3-Butadiene	ND	0.020	ND	0.044		1
1,3-Dichlorobenzene	ND	0.020	ND	0.120		1
1,4-Dichlorobenzene	ND	0.020	ND	0.120		1
Benzene	ND	0.100	ND	0.319		1
Bromodichloromethane	ND	0.010	ND	0.067		1
Bromoform	ND	0.020	ND	0.206		1
Carbon tetrachloride	ND	0.020	ND	0.126		1
Chlorobenzene	ND	0.020	ND	0.092		1
Chloroform	ND	0.020	ND	0.098		1
cis-1,2-Dichloroethene	ND	0.020	ND	0.079		1
Ethylbenzene	ND	0.020	ND	0.087		1
Methylene chloride	ND	0.500	ND	1.74		1
Methyl tert butyl ether	ND	0.020	ND	0.072		1
Naphthalene	ND	0.050	ND	0.260		1
Xylenes, Total	ND	0.060	ND	0.260		1
Tetrachloroethene	ND	0.020	ND	0.136		1
Toluene	ND	0.050	ND	0.188		1

Project Name: UNIFIRST PROPERTY IA / VI **Lab Number:** L1005229

Project Number: 1-2114-2 **Report Date:** 04/29/10

Method Blank Analysis
Batch Quality Control

Analytical Method: 48,TO-15-SIM
Analytical Date: 04/20/10 22:42

Parameter	ppbV Results	ppbV RDL	ug/m3 Results	ug/m3 RDL	Qualifier	Dilution Factor
Volatile Organics in Air by SIM - Mansfield Lab for sample(s): 01-11,13-21 Batch: WG409045-4						
trans-1,2-Dichloroethene	ND	0.020	ND	0.079		1
trans-1,3-Dichloropropene	ND	0.020	ND	0.091		1
Trichloroethene	ND	0.020	ND	0.107		1
Vinyl chloride	ND	0.020	ND	0.051		1
Isopropylbenzene	ND	0.500	ND	2.46		1

Project Name: UNIFIRST PROPERTY IA / VI **Lab Number:** L1005229

Project Number: 1-2114-2 **Report Date:** 04/29/10

Method Blank Analysis
Batch Quality Control

Analytical Method: 48,TO-15-SIM
Analytical Date: 04/21/10 19:55

Parameter	ppbV Results	ppbV RDL	ug/m3 Results	ug/m3 RDL	Qualifier	Dilution Factor
Volatile Organics in Air by SIM - Mansfield Lab for sample(s): 22-26,29,36-38,40 Batch: WG409175-4						
1,1,1-Trichloroethane	ND	0.020	ND	0.109		1
1,1,2-Trichloroethane	ND	0.020	ND	0.109		1
1,1-Dichloroethane	ND	0.020	ND	0.081		1
1,1-Dichloroethene	ND	0.020	ND	0.079		1
1,2,4-Trimethylbenzene	ND	0.020	ND	0.098		1
1,2-Dibromoethane	ND	0.010	ND	0.077		1
1,2-Dichloroethane	ND	0.020	ND	0.081		1
1,2-Dichloropropane	ND	0.020	ND	0.092		1
1,3-Butadiene	ND	0.020	ND	0.044		1
1,3-Dichlorobenzene	ND	0.020	ND	0.120		1
1,4-Dichlorobenzene	ND	0.020	ND	0.120		1
Benzene	ND	0.100	ND	0.319		1
Bromodichloromethane	ND	0.010	ND	0.067		1
Bromoform	ND	0.020	ND	0.206		1
Carbon tetrachloride	ND	0.020	ND	0.126		1
Chlorobenzene	ND	0.020	ND	0.092		1
Chloroform	ND	0.020	ND	0.098		1
cis-1,2-Dichloroethene	ND	0.020	ND	0.079		1
Ethylbenzene	ND	0.020	ND	0.087		1
Methylene chloride	ND	0.500	ND	1.74		1
Methyl tert butyl ether	ND	0.020	ND	0.072		1
Naphthalene	ND	0.050	ND	0.260		1
Xylenes, Total	ND	0.060	ND	0.260		1
Tetrachloroethene	ND	0.020	ND	0.136		1
Toluene	ND	0.050	ND	0.188		1

Project Name: UNIFIRST PROPERTY IA / VI **Lab Number:** L1005229

Project Number: 1-2114-2 **Report Date:** 04/29/10

Method Blank Analysis
Batch Quality Control

Analytical Method: 48,TO-15-SIM
Analytical Date: 04/21/10 19:55

Parameter	ppbV Results	ppbV RDL	ug/m3 Results	ug/m3 RDL	Qualifier	Dilution Factor
Volatile Organics in Air by SIM - Mansfield Lab for sample(s): 22-26,29,36-38,40 Batch: WG409175-4						
trans-1,2-Dichloroethene	ND	0.020	ND	0.079		1
trans-1,3-Dichloropropene	ND	0.020	ND	0.091		1
Trichloroethene	ND	0.020	ND	0.107		1
Vinyl chloride	ND	0.020	ND	0.051		1
Isopropylbenzene	ND	0.500	ND	2.46		1

Project Name: UNIFIRST PROPERTY IA / VI **Lab Number:** L1005229

Project Number: 1-2114-2 **Report Date:** 04/29/10

Method Blank Analysis
Batch Quality Control

Analytical Method: 48,TO-15-SIM
Analytical Date: 04/26/10 15:11

Parameter	ppbV Results	ppbV RDL	ug/m3 Results	ug/m3 RDL	Qualifier	Dilution Factor
Volatile Organics in Air by SIM - Mansfield Lab for sample(s): 39 Batch: WG409385-13						
Tetrachloroethene	ND	0.020	ND	0.136		1

Project Name: UNIFIRST PROPERTY IA / VI **Lab Number:** L1005229

Project Number: 1-2114-2 **Report Date:** 04/29/10

Method Blank Analysis
Batch Quality Control

Analytical Method: 48,TO-15-SIM
Analytical Date: 04/22/10 18:28

Parameter	ppbV Results	ppbV RDL	ug/m3 Results	ug/m3 RDL	Qualifier	Dilution Factor
Volatile Organics in Air by SIM - Mansfield Lab for sample(s): 12,27-28,30-35,39,41 Batch: WG409385-4						
1,1,1-Trichloroethane	ND	0.020	ND	0.109		1
1,1,2-Trichloroethane	ND	0.020	ND	0.109		1
1,1-Dichloroethane	ND	0.020	ND	0.081		1
1,1-Dichloroethene	ND	0.020	ND	0.079		1
1,2,4-Trimethylbenzene	ND	0.020	ND	0.098		1
1,2-Dibromoethane	ND	0.010	ND	0.077		1
1,2-Dichloroethane	ND	0.020	ND	0.081		1
1,2-Dichloropropane	ND	0.020	ND	0.092		1
1,3-Butadiene	ND	0.020	ND	0.044		1
1,3-Dichlorobenzene	ND	0.020	ND	0.120		1
1,4-Dichlorobenzene	ND	0.020	ND	0.120		1
Benzene	ND	0.100	ND	0.319		1
Bromodichloromethane	ND	0.010	ND	0.067		1
Bromoform	ND	0.020	ND	0.206		1
Carbon tetrachloride	ND	0.020	ND	0.126		1
Chlorobenzene	ND	0.020	ND	0.092		1
Chloroform	ND	0.020	ND	0.098		1
cis-1,2-Dichloroethene	ND	0.020	ND	0.079		1
Ethylbenzene	ND	0.020	ND	0.087		1
Methylene chloride	ND	0.500	ND	1.74		1
Methyl tert butyl ether	ND	0.020	ND	0.072		1
Naphthalene	ND	0.050	ND	0.260		1
Xylenes, Total	ND	0.060	ND	0.260		1
Tetrachloroethene	ND	0.020	ND	0.136		1
Toluene	ND	0.050	ND	0.188		1

Project Name: UNIFIRST PROPERTY IA / VI **Lab Number:** L1005229

Project Number: 1-2114-2 **Report Date:** 04/29/10

Method Blank Analysis
Batch Quality Control

Analytical Method: 48,TO-15-SIM
Analytical Date: 04/22/10 18:28

Parameter	ppbV Results	ppbV RDL	ug/m3 Results	ug/m3 RDL	Qualifier	Dilution Factor
Volatile Organics in Air by SIM - Mansfield Lab for sample(s): 12,27-28,30-35,39,41 Batch: WG409385-4						
trans-1,2-Dichloroethene	ND	0.020	ND	0.079		1
trans-1,3-Dichloropropene	ND	0.020	ND	0.091		1
Trichloroethene	ND	0.020	ND	0.107		1
Vinyl chloride	ND	0.020	ND	0.051		1
Isopropylbenzene	ND	0.500	ND	2.46		1

Project Name: UNIFIRST PROPERTY IA / VI **Lab Number:** L1005229

Project Number: 1-2114-2 **Report Date:** 04/29/10

Method Blank Analysis
Batch Quality Control

Analytical Method: 48,TO-15-SIM
Analytical Date: 04/23/10 19:07

Parameter	ppbV Results	ppbV RDL	ug/m3 Results	ug/m3 RDL	Qualifier	Dilution Factor
Volatile Organics in Air by SIM - Mansfield Lab for sample(s): 12,27-28,30-35,41 Batch: WG409385-9						
Tetrachloroethene	0.167	0.020	1.13	0.136		1

Lab Control Sample Analysis
Batch Quality Control

Project Name: UNIFIRST PROPERTY IA / VI
Project Number: 1-2114-2
Lab Number: L1005229
Report Date: 04/29/10

Parameter	LCS %Recovery	Qual	LCSD %Recovery	Qual	%Recovery Limits	RPD	Qual	RPD Limits
Volatile Organics in Air by SIM - Mansfield Lab Associated sample(s): 01-11,13-21 Batch: WG409045-3								
1,1,1-Trichloroethane	79		-		70-130	-		25
1,1,2-Trichloroethane	86		-		70-130	-		25
1,1-Dichloroethane	83		-		70-130	-		25
1,1-Dichloroethene	88		-		70-130	-		25
1,2,4-Trimethylbenzene	111		-		70-130	-		25
1,2-Dibromoethane	84		-		70-130	-		25
1,2-Dichloroethane	83		-		70-130	-		25
1,2-Dichloropropane	78		-		70-130	-		25
1,3-Butadiene	91		-		70-130	-		25
1,3-Dichlorobenzene	101		-		70-130	-		25
1,4-Dichlorobenzene	102		-		70-130	-		25
Benzene	74		-		70-130	-		25
Bromodichloromethane	85		-		70-130	-		25
Bromoform	90		-		70-130	-		25
Carbon tetrachloride	81		-		70-130	-		25
Chlorobenzene	83		-		70-130	-		25
Chloroform	87		-		70-130	-		25
cis-1,2-Dichloroethene	84		-		70-130	-		25
Ethylbenzene	92		-		70-130	-		25
Methylene chloride	80		-		70-130	-		25
Methyl tert butyl ether	112		-		70-130	-		25

Lab Control Sample Analysis
Batch Quality Control

Project Name: UNIFIRST PROPERTY IA / VI
Project Number: 1-2114-2
Lab Number: L1005229
Report Date: 04/29/10

Parameter	LCS %Recovery	Qual	LCSD %Recovery	Qual	%Recovery Limits	RPD	Qual	RPD Limits
Volatile Organics in Air by SIM - Mansfield Lab Associated sample(s): 01-11,13-21 Batch: WG409045-3								
Naphthalene	129		-		70-130	-		25
XYLENE (TOTAL)	96		-		70-130	-		25
Tetrachloroethene	84		-		70-130	-		25
Toluene	80		-		70-130	-		25
trans-1,2-Dichloroethene	85		-		70-130	-		25
trans-1,3-Dichloropropene	73		-		70-130	-		25
Trichloroethene	83		-		70-130	-		25
Vinyl chloride	90		-		70-130	-		25
Isopropylbenzene	97		-		70-130	-		25
Volatile Organics in Air by SIM - Mansfield Lab Associated sample(s): 22-26,29,36-38,40 Batch: WG409175-3								
1,1,1-Trichloroethane	80		-		70-130	-		25
1,1,2-Trichloroethane	85		-		70-130	-		25
1,1-Dichloroethane	86		-		70-130	-		25
1,1-Dichloroethene	92		-		70-130	-		25
1,2,4-Trimethylbenzene	90		-		70-130	-		25
1,2-Dibromoethane	90		-		70-130	-		25
1,2-Dichloroethane	90		-		70-130	-		25
1,2-Dichloropropane	80		-		70-130	-		25
1,3-Butadiene	92		-		70-130	-		25

Lab Control Sample Analysis
Batch Quality Control

Project Name: UNIFIRST PROPERTY IA / VI
Project Number: 1-2114-2
Lab Number: L1005229
Report Date: 04/29/10

Parameter	LCS %Recovery	Qual	LCSD %Recovery	Qual	%Recovery Limits	RPD	Qual	RPD Limits
Volatile Organics in Air by SIM - Mansfield Lab Associated sample(s): 22-26,29,36-38,40 Batch: WG409175-3								
1,3-Dichlorobenzene	93		-		70-130	-		25
1,4-Dichlorobenzene	90		-		70-130	-		25
Benzene	77		-		70-130	-		25
Bromodichloromethane	82		-		70-130	-		25
Bromoform	93		-		70-130	-		25
Carbon tetrachloride	81		-		70-130	-		25
Chlorobenzene	90		-		70-130	-		25
Chloroform	91		-		70-130	-		25
cis-1,2-Dichloroethene	86		-		70-130	-		25
Ethylbenzene	87		-		70-130	-		25
Methylene chloride	85		-		70-130	-		25
Methyl tert butyl ether	81		-		70-130	-		25
Naphthalene	94		-		70-130	-		25
XYLENE (TOTAL)	89		-		70-130	-		25
Tetrachloroethene	90		-		70-130	-		25
Toluene	83		-		70-130	-		25
trans-1,2-Dichloroethene	81		-		70-130	-		25
trans-1,3-Dichloropropene	**65**	Q	-		70-130	-		25
Trichloroethene	86		-		70-130	-		25
Vinyl chloride	92		-		70-130	-		25
Isopropylbenzene	93		-		70-130	-		25

Lab Control Sample Analysis
Batch Quality Control

Project Name: UNIFIRST PROPERTY IA / VI
Project Number: 1-2114-2

Lab Number: L1005229
Report Date: 04/29/10

Parameter	LCS %Recovery	Qual	LCSD %Recovery	Qual	%Recovery Limits	RPD	Qual	RPD Limits
Volatile Organics in Air by SIM - Mansfield Lab Associated sample(s): 22-26,29,36-38,40 Batch: WG409175-3								
Volatile Organics in Air by SIM - Mansfield Lab Associated sample(s): 39 Batch: WG409385-12								
Tetrachloroethene	81		-		70-130	-		25

Lab Control Sample Analysis
Batch Quality Control

Project Name: UNIFIRST PROPERTY IA / VI
Project Number: 1-2114-2

Lab Number: L1005229
Report Date: 04/29/10

Parameter	LCS %Recovery	Qual	LCSD %Recovery	Qual	%Recovery Limits	RPD	Qual	RPD Limits
Volatile Organics in Air by SIM - Mansfield Lab Associated sample(s): 12,27-28,30-35,39,41 Batch: WG409385-3								
1,1,1-Trichloroethane	84		-		70-130	-		25
1,1,2-Trichloroethane	90		-		70-130	-		25
1,1-Dichloroethane	83		-		70-130	-		25
1,1-Dichloroethene	93		-		70-130	-		25
1,2,4-Trimethylbenzene	108		-		70-130	-		25
1,2-Dibromoethane	87		-		70-130	-		25
1,2-Dichloroethane	81		-		70-130	-		25
1,2-Dichloropropane	81		-		70-130	-		25
1,3-Butadiene	92		-		70-130	-		25
1,3-Dichlorobenzene	107		-		70-130	-		25
1,4-Dichlorobenzene	107		-		70-130	-		25
Benzene	73		-		70-130	-		25
Bromodichloromethane	88		-		70-130	-		25
Bromoform	94		-		70-130	-		25
Carbon tetrachloride	88		-		70-130	-		25
Chlorobenzene	88		-		70-130	-		25
Chloroform	89		-		70-130	-		25
cis-1,2-Dichloroethene	83		-		70-130	-		25
Ethylbenzene	89		-		70-130	-		25
Methylene chloride	88		-		70-130	-		25
Methyl tert butyl ether	93		-		70-130	-		25

Lab Control Sample Analysis
Batch Quality Control

Project Name: UNIFIRST PROPERTY IA / VI
Project Number: 1-2114-2

Lab Number: L1005229
Report Date: 04/29/10

Parameter	LCS %Recovery	Qual	LCSD %Recovery	Qual	%Recovery Limits	RPD	Qual	RPD Limits
Volatile Organics in Air by SIM - Mansfield Lab Associated sample(s): 12,27-28,30-35,39,41 Batch: WG409385-3								
Naphthalene	130		-		70-130	-		25
XYLENE (TOTAL)	95		-		70-130	-		25
Tetrachloroethene	89		-		70-130	-		25
Toluene	78		-		70-130	-		25
trans-1,2-Dichloroethene	81		-		70-130	-		25
trans-1,3-Dichloropropene	**68**	Q	-		70-130	-		25
Trichloroethene	90		-		70-130	-		25
Vinyl chloride	97		-		70-130	-		25
Isopropylbenzene	101		-		70-130	-		25
Volatile Organics in Air by SIM - Mansfield Lab Associated sample(s): 12,27-28,30-35,41 Batch: WG409385-8								
Tetrachloroethene	97		-		70-130	-		25

Lab Duplicate Analysis
Batch Quality Control

Project Name: UNIFIRST PROPERTY IA / VI
Project Number: 1-2114-2

Lab Number: L1005229
Report Date: 04/29/10

Parameter	Native Sample	Duplicate Sample	Units	RPD	Qual	RPD Limits
Volatile Organics in Air by SIM - Mansfield Lab Associated sample(s): 01-11,13-21 QC Batch ID: WG409045-5 QC Sample: L1005229-16 Client ID: IA-06						
1,1,1-Trichloroethane	0.078	0.074	ppbV	5		25
1,1,2-Trichloroethane	ND	ND	ppbV	NC		25
1,1-Dichloroethane	ND	ND	ppbV	NC		25
1,1-Dichloroethene	ND	ND	ppbV	NC		25
1,2,4-Trimethylbenzene	0.212	0.229	ppbV	8		25
1,2-Dibromoethane	ND	ND	ppbV	NC		25
1,2-Dichloroethane	0.139	0.145	ppbV	4		25
1,2-Dichloropropane	ND	ND	ppbV	NC		25
1,3-Butadiene	0.030	0.031	ppbV	3		25
1,3-Dichlorobenzene	ND	ND	ppbV	NC		25
1,4-Dichlorobenzene	0.391	0.405	ppbV	4		25
Benzene	0.370	0.372	ppbV	1		25
Bromodichloromethane	ND	ND	ppbV	NC		25
Bromoform	ND	ND	ppbV	NC		25
Carbon tetrachloride	0.072	0.067	ppbV	7		25
Chlorobenzene	ND	ND	ppbV	NC		25
Chloroform	0.033	0.034	ppbV	3		25
cis-1,2-Dichloroethene	ND	ND	ppbV	NC		25
Ethylbenzene	0.187	0.205	ppbV	9		25

Lab Duplicate Analysis
Batch Quality Control

Project Name: UNIFIRST PROPERTY IA / VI
Project Number: 1-2114-2

Lab Number: L1005229
Report Date: 04/29/10

Parameter	Native Sample	Duplicate Sample	Units	RPD	RPD Limits
Volatile Organics in Air by SIM - Mansfield Lab Associated sample(s): 01-11,13-21 QC Batch ID: WG409045-5 QC Sample: L1005229-16 Client ID: IA-06					
Methylene chloride	ND	0.502	ppbV	NC	25
Methyl tert butyl ether	0.041	0.042	ppbV	2	25
Naphthalene	0.666	0.695	ppbV	4	25
Xylenes, Total	0.713	0.779	ppbV	9	25
Tetrachloroethene	5.45	5.56	ppbV	2	25
Toluene	2.40	2.60	ppbV	8	25
trans-1,2-Dichloroethene	ND	ND	ppbV	NC	25
trans-1,3-Dichloropropene	ND	ND	ppbV	NC	25
Trichloroethene	0.043	0.041	ppbV	5	25
Vinyl chloride	ND	ND	ppbV	NC	25
Isopropylbenzene	ND	ND	ppbV	NC	25

Lab Duplicate Analysis
Batch Quality Control

Project Name: UNIFIRST PROPERTY IA / VI
Project Number: 1-2114-2

Lab Number: L1005229
Report Date: 04/29/10

Parameter	Native Sample	Duplicate Sample	Units	RPD	RPD Limits
Volatile Organics in Air by SIM - Mansfield Lab Associated sample(s): 22-26,29,36-38,40 QC Batch ID: WG409175-5 QC Sample: L1005229-25 Client ID: SV-04					
1,1,1-Trichloroethane	0.999	0.948	ppbV	5	25
1,1,2-Trichloroethane	ND	ND	ppbV	NC	25
1,1-Dichloroethane	ND	ND	ppbV	NC	25
1,1-Dichloroethene	ND	ND	ppbV	NC	25
1,2,4-Trimethylbenzene	0.022	0.021	ppbV	5	25
1,2-Dibromoethane	ND	ND	ppbV	NC	25
1,2-Dichloroethane	ND	ND	ppbV	NC	25
1,2-Dichloropropane	ND	ND	ppbV	NC	25
1,3-Butadiene	ND	ND	ppbV	NC	25
1,3-Dichlorobenzene	ND	ND	ppbV	NC	25
1,4-Dichlorobenzene	0.031	0.027	ppbV	14	25
Benzene	ND	ND	ppbV	NC	25
Bromodichloromethane	ND	ND	ppbV	NC	25
Bromoform	ND	ND	ppbV	NC	25
Carbon tetrachloride	0.034	0.033	ppbV	3	25
Chlorobenzene	ND	ND	ppbV	NC	25
Chloroform	ND	ND	ppbV	NC	25
cis-1,2-Dichloroethene	ND	ND	ppbV	NC	25
Ethylbenzene	ND	ND	ppbV	NC	25

Lab Duplicate Analysis
Batch Quality Control

Project Name: UNIFIRST PROPERTY IA / VI
Project Number: 1-2114-2

Lab Number: L1005229
Report Date: 04/29/10

Parameter	Native Sample	Duplicate Sample	Units	RPD	RPD Limits
Volatile Organics in Air by SIM - Mansfield Lab Associated sample(s): 22-26,29,36-38,40 QC Batch ID: WG409175-5 QC Sample: L1005229-25 Client ID: SV-04					
Methylene chloride	ND	ND	ppbV	NC	25
Methyl tert butyl ether	ND	ND	ppbV	NC	25
Naphthalene	ND	ND	ppbV	NC	25
Xylenes, Total	ND	ND	ppbV	NC	25
Tetrachloroethene	29.7	29.0	ppbV	2	25
Toluene	0.100	0.106	ppbV	6	25
trans-1,2-Dichloroethene	ND	ND	ppbV	NC	25
trans-1,3-Dichloropropene	ND	ND	ppbV	NC	25
Trichloroethene	ND	ND	ppbV	NC	25
Vinyl chloride	ND	ND	ppbV	NC	25
Isopropylbenzene	ND	ND	ppbV	NC	25

Lab Duplicate Analysis
Batch Quality Control

Project Name: UNIFIRST PROPERTY IA / VI
Project Number: 1-2114-2

Lab Number: L1005229
Report Date: 04/29/10

Parameter	Native Sample	Duplicate Sample	Units	RPD	RPD Limits
Volatile Organics in Air by SIM - Mansfield Lab Associated sample(s): 12,27-28,30-35,39,41 QC Batch ID: WG409385-5 QC Sample: L1005229-30 Client ID: SV-15					
1,1,1-Trichloroethane	8.83	9.16	ppbV	4	25
1,1,2-Trichloroethane	ND	ND	ppbV	NC	25
1,1-Dichloroethane	3.91	3.41	ppbV	14	25
1,1-Dichloroethene	ND	ND	ppbV	NC	25
1,2,4-Trimethylbenzene	ND	ND	ppbV	NC	25
1,2-Dibromoethane	ND	ND	ppbV	NC	25
1,2-Dichloroethane	ND	ND	ppbV	NC	25
1,2-Dichloropropane	ND	ND	ppbV	NC	25
1,3-Butadiene	ND	ND	ppbV	NC	25
1,3-Dichlorobenzene	ND	ND	ppbV	NC	25
1,4-Dichlorobenzene	ND	ND	ppbV	NC	25
Benzene	ND	ND	ppbV	NC	25
Bromodichloromethane	ND	ND	ppbV	NC	25
Bromoform	ND	ND	ppbV	NC	25
Carbon tetrachloride	ND	ND	ppbV	NC	25
Chlorobenzene	ND	ND	ppbV	NC	25
Chloroform	0.780	0.770	ppbV	1	25
cis-1,2-Dichloroethene	11.5	11.2	ppbV	3	25
Ethylbenzene	ND	ND	ppbV	NC	25

Lab Duplicate Analysis
Batch Quality Control

Project Name: UNIFIRST PROPERTY IA / VI
Project Number: 1-2114-2

Lab Number: L1005229
Report Date: 04/29/10

Parameter	Native Sample	Duplicate Sample	Units	RPD	RPD Limits
Volatile Organics in Air by SIM - Mansfield Lab Associated sample(s): 12,27-28,30-35,39,41 QC Batch ID: WG409385-5 QC Sample: L1005229-30 Client ID: SV-15					
Methylene chloride	ND	ND	ppbV	NC	25
Methyl tert butyl ether	ND	ND	ppbV	NC	25
Naphthalene	ND	ND	ppbV	NC	25
Xylenes, Total	ND	ND	ppbV	NC	25
Tetrachloroethene	1850E	1730	ppbV	7	25
Toluene	ND	ND	ppbV	NC	25
trans-1,2-Dichloroethene	0.300	0.270	ppbV	11	25
trans-1,3-Dichloropropene	ND	ND	ppbV	NC	25
Trichloroethene	31.2	32.7	ppbV	5	25
Vinyl chloride	ND	ND	ppbV	NC	25
Isopropylbenzene	ND	ND	ppbV	NC	25

Volatile Organics in Air by SIM - Mansfield Lab Associated sample(s): 12,27-28,30-35,39,41 QC Batch ID: WG409385-5 QC Sample: L1005229-30 Client ID: SV-15					
Tetrachloroethene	1350	1310	ppbV	3	25

Project Name: UNIFIRST PROPERTY IA / VI **Lab Number:** L1005229

Project Number: 1-2114-2 **Report Date:** 04/29/10

SAMPLE RESULTS

Lab ID:	L1005229-01	Date Collected:	04/12/10 02:58
Client ID:	IA-12	Date Received:	04/12/10
Sample Location:	WOBURN, MA	Field Prep:	Not Specified
Matrix:	Air		
Analytical Method:	96,APH		
Analytical Date:	04/20/10 23:35		
Analyst:	AR		

Quality Control Information

Sample Type:	10 ml/min Composite
Sample Container Type:	Canister - 6 Liter
Sampling Flow Controller:	Mechanical
Sampling Zone:	Unknown
Sampling Flow Meter RPD of pre & post-sampling calibration check:	<=20%
Were all QA/QC procedures REQUIRED by the method followed?	Yes
Were all performance/acceptance standards for the required procedures achieved?	Yes
Were significant modifications made to the method as specified in Sect 11.1.2?	No

Parameter	Result	Qualifier	Units	RDL	Dilution Factor
Petroleum Hydrocarbons in Air - Mansfield Lab					
1,3-Butadiene	ND		ug/m3	2.0	1
Methyl tert butyl ether	ND		ug/m3	2.0	1
Benzene	ND		ug/m3	2.0	1
Toluene	9.2		ug/m3	2.0	1
Ethylbenzene	ND		ug/m3	2.0	1
p/m-Xylene	ND		ug/m3	4.0	1
o-Xylene	ND		ug/m3	2.0	1
Naphthalene	3.7		ug/m3	2.0	1
C5-C8 Aliphatics, Adjusted	48		ug/m3	12	1
C9-C12 Aliphatics, Adjusted	58		ug/m3	14	1
C9-C10 Aromatics	ND		ug/m3	10	1

Project Name: UNIFIRST PROPERTY IA / VI **Lab Number:** L1005229

Project Number: 1-2114-2 **Report Date:** 04/29/10

SAMPLE RESULTS

Lab ID:	L1005229-02	Date Collected:	04/12/10 02:35
Client ID:	IA-04	Date Received:	04/12/10
Sample Location:	WOBURN, MA	Field Prep:	Not Specified
Matrix:	Air		
Analytical Method:	96,APH		
Analytical Date:	04/21/10 00:14		
Analyst:	AR		

Quality Control Information

Sample Type:	10 ml/min Composite
Sample Container Type:	Canister - 6 Liter
Sampling Flow Controller:	Mechanical
Sampling Zone:	Unknown
Sampling Flow Meter RPD of pre & post-sampling calibration check:	<=20%
Were all QA/QC procedures REQUIRED by the method followed?	Yes
Were all performance/acceptance standards for the required procedures achieved?	Yes
Were significant modifications made to the method as specified in Sect 11.1.2?	No

Parameter	Result	Qualifier	Units	RDL	Dilution Factor
Petroleum Hydrocarbons in Air - Mansfield Lab					
1,3-Butadiene	ND		ug/m3	2.0	1
Methyl tert butyl ether	ND		ug/m3	2.0	1
Benzene	ND		ug/m3	2.0	1
Toluene	21		ug/m3	2.0	1
Ethylbenzene	ND		ug/m3	2.0	1
p/m-Xylene	ND		ug/m3	4.0	1
o-Xylene	ND		ug/m3	2.0	1
Naphthalene	4.1		ug/m3	2.0	1
C5-C8 Aliphatics, Adjusted	66		ug/m3	12	1
C9-C12 Aliphatics, Adjusted	73		ug/m3	14	1
C9-C10 Aromatics	ND		ug/m3	10	1

Project Name: UNIFIRST PROPERTY IA / VI **Lab Number:** L1005229

Project Number: 1-2114-2 **Report Date:** 04/29/10

SAMPLE RESULTS

Lab ID:	L1005229-03	Date Collected:	04/12/10 01:40
Client ID:	IA-14	Date Received:	04/12/10
Sample Location:	WOBURN, MA	Field Prep:	Not Specified
Matrix:	Air		
Analytical Method:	96,APH		
Analytical Date:	04/21/10 00:53		
Analyst:	AR		

Quality Control Information

Sample Type:	10 ml/min Composite
Sample Container Type:	Canister - 6 Liter
Sampling Flow Controller:	Mechanical
Sampling Zone:	Unknown
Sampling Flow Meter RPD of pre & post-sampling calibration check:	<=20%
Were all QA/QC procedures REQUIRED by the method followed?	Yes
Were all performance/acceptance standards for the required procedures achieved?	Yes
Were significant modifications made to the method as specified in Sect 11.1.2?	No

Parameter	Result	Qualifier	Units	RDL	Dilution Factor
Petroleum Hydrocarbons in Air - Mansfield Lab					
1,3-Butadiene	ND		ug/m3	2.0	1
Methyl tert butyl ether	ND		ug/m3	2.0	1
Benzene	ND		ug/m3	2.0	1
Toluene	11		ug/m3	2.0	1
Ethylbenzene	ND		ug/m3	2.0	1
p/m-Xylene	4.1		ug/m3	4.0	1
o-Xylene	ND		ug/m3	2.0	1
Naphthalene	2.6		ug/m3	2.0	1
C5-C8 Aliphatics, Adjusted	74		ug/m3	12	1
C9-C12 Aliphatics, Adjusted	82		ug/m3	14	1
C9-C10 Aromatics	ND		ug/m3	10	1

Project Name: UNIFIRST PROPERTY IA / VI **Lab Number:** L1005229

Project Number: 1-2114-2 **Report Date:** 04/29/10

SAMPLE RESULTS

Lab ID:	L1005229-04	Date Collected:	04/12/10 02:12
Client ID:	OA-03	Date Received:	04/12/10
Sample Location:	WOBURN, MA	Field Prep:	Not Specified
Matrix:	Air		
Analytical Method:	96,APH		
Analytical Date:	04/21/10 01:32		
Analyst:	AR		

Quality Control Information

Sample Type:	10 ml/min Composite
Sample Container Type:	Canister - 6 Liter
Sampling Flow Controller:	Mechanical
Sampling Zone:	Unknown
Sampling Flow Meter RPD of pre & post-sampling calibration check:	<=20%
Were all QA/QC procedures REQUIRED by the method followed?	Yes
Were all performance/acceptance standards for the required procedures achieved?	Yes
Were significant modifications made to the method as specified in Sect 11.1.2?	No

Parameter	Result	Qualifier	Units	RDL	Dilution Factor
Petroleum Hydrocarbons in Air - Mansfield Lab					
1,3-Butadiene	ND		ug/m3	2.0	1
Methyl tert butyl ether	ND		ug/m3	2.0	1
Benzene	ND		ug/m3	2.0	1
Toluene	2.3		ug/m3	2.0	1
Ethylbenzene	ND		ug/m3	2.0	1
p/m-Xylene	ND		ug/m3	4.0	1
o-Xylene	ND		ug/m3	2.0	1
Naphthalene	ND		ug/m3	2.0	1
C5-C8 Aliphatics, Adjusted	12		ug/m3	12	1
C9-C12 Aliphatics, Adjusted	ND		ug/m3	14	1
C9-C10 Aromatics	ND		ug/m3	10	1

Project Name: UNIFIRST PROPERTY IA / VI **Lab Number:** L1005229

Project Number: 1-2114-2 **Report Date:** 04/29/10

SAMPLE RESULTS

Lab ID:	L1005229-05	Date Collected:	04/12/10 02:30
Client ID:	IA-10A	Date Received:	04/12/10
Sample Location:	WOBURN, MA	Field Prep:	Not Specified
Matrix:	Air		
Analytical Method:	96,APH		
Analytical Date:	04/21/10 02:11		
Analyst:	AR		

Quality Control Information

Sample Type:	10 ml/min Composite
Sample Container Type:	Canister - 6 Liter
Sampling Flow Controller:	Mechanical
Sampling Zone:	Unknown
Sampling Flow Meter RPD of pre & post-sampling calibration check:	<=20%
Were all QA/QC procedures REQUIRED by the method followed?	Yes
Were all performance/acceptance standards for the required procedures achieved?	Yes
Were significant modifications made to the method as specified in Sect 11.1.2?	No

Parameter	Result	Qualifier	Units	RDL	Dilution Factor
Petroleum Hydrocarbons in Air - Mansfield Lab					
1,3-Butadiene	ND		ug/m3	2.0	1
Methyl tert butyl ether	ND		ug/m3	2.0	1
Benzene	ND		ug/m3	2.0	1
Toluene	14		ug/m3	2.0	1
Ethylbenzene	ND		ug/m3	2.0	1
p/m-Xylene	ND		ug/m3	4.0	1
o-Xylene	ND		ug/m3	2.0	1
Naphthalene	5.7		ug/m3	2.0	1
C5-C8 Aliphatics, Adjusted	55		ug/m3	12	1
C9-C12 Aliphatics, Adjusted	47		ug/m3	14	1
C9-C10 Aromatics	ND		ug/m3	10	1

Project Name: UNIFIRST PROPERTY IA / VI **Lab Number:** L1005229

Project Number: 1-2114-2 **Report Date:** 04/29/10

SAMPLE RESULTS

Lab ID:	L1005229-06	Date Collected:	04/12/10 02:18
Client ID:	IA-11	Date Received:	04/12/10
Sample Location:	WOBURN, MA	Field Prep:	Not Specified
Matrix:	Air		
Analytical Method:	96,APH		
Analytical Date:	04/21/10 02:49		
Analyst:	AR		

Quality Control Information

Sample Type:	10 ml/min Composite
Sample Container Type:	Canister - 6 Liter
Sampling Flow Controller:	Mechanical
Sampling Zone:	Unknown
Sampling Flow Meter RPD of pre & post-sampling calibration check:	<=20%
Were all QA/QC procedures REQUIRED by the method followed?	Yes
Were all performance/acceptance standards for the required procedures achieved?	Yes
Were significant modifications made to the method as specified in Sect 11.1.2?	No

Parameter	Result	Qualifier	Units	RDL	Dilution Factor
Petroleum Hydrocarbons in Air - Mansfield Lab					
1,3-Butadiene	ND		ug/m3	2.0	1
Methyl tert butyl ether	ND		ug/m3	2.0	1
Benzene	ND		ug/m3	2.0	1
Toluene	3.2		ug/m3	2.0	1
Ethylbenzene	ND		ug/m3	2.0	1
p/m-Xylene	ND		ug/m3	4.0	1
o-Xylene	ND		ug/m3	2.0	1
Naphthalene	ND		ug/m3	2.0	1
C5-C8 Aliphatics, Adjusted	17		ug/m3	12	1
C9-C12 Aliphatics, Adjusted	ND		ug/m3	14	1
C9-C10 Aromatics	ND		ug/m3	10	1

Project Name: UNIFIRST PROPERTY IA / VI **Lab Number:** L1005229

Project Number: 1-2114-2 **Report Date:** 04/29/10

SAMPLE RESULTS

Lab ID:	L1005229-07	Date Collected:	04/12/10 02:28
Client ID:	IA-DUP02	Date Received:	04/12/10
Sample Location:	WOBURN, MA	Field Prep:	Not Specified
Matrix:	Air		
Analytical Method:	96,APH		
Analytical Date:	04/21/10 03:28		
Analyst:	AR		

Quality Control Information

Sample Type:	10 ml/min Composite
Sample Container Type:	Canister - 6 Liter
Sampling Flow Controller:	Mechanical
Sampling Zone:	Unknown
Sampling Flow Meter RPD of pre & post-sampling calibration check:	<=20%
Were all QA/QC procedures REQUIRED by the method followed?	Yes
Were all performance/acceptance standards for the required procedures achieved?	Yes
Were significant modifications made to the method as specified in Sect 11.1.2?	No

Parameter	Result	Qualifier	Units	RDL	Dilution Factor
Petroleum Hydrocarbons in Air - Mansfield Lab					
1,3-Butadiene	ND		ug/m3	2.0	1
Methyl tert butyl ether	ND		ug/m3	2.0	1
Benzene	ND		ug/m3	2.0	1
Toluene	3.0		ug/m3	2.0	1
Ethylbenzene	ND		ug/m3	2.0	1
p/m-Xylene	ND		ug/m3	4.0	1
o-Xylene	ND		ug/m3	2.0	1
Naphthalene	ND		ug/m3	2.0	1
C5-C8 Aliphatics, Adjusted	17		ug/m3	12	1
C9-C12 Aliphatics, Adjusted	ND		ug/m3	14	1
C9-C10 Aromatics	ND		ug/m3	10	1

Project Name: UNIFIRST PROPERTY IA / VI **Lab Number:** L1005229

Project Number: 1-2114-2 **Report Date:** 04/29/10

SAMPLE RESULTS

Lab ID:	L1005229-08	Date Collected:	04/12/10 01:10
Client ID:	IA-09	Date Received:	04/12/10
Sample Location:	WOBURN, MA	Field Prep:	Not Specified
Matrix:	Air		
Analytical Method:	96,APH		
Analytical Date:	04/21/10 04:07		
Analyst:	AR		

Quality Control Information

Sample Type:	10 ml/min Composite
Sample Container Type:	Canister - 6 Liter
Sampling Flow Controller:	Mechanical
Sampling Zone:	Unknown
Sampling Flow Meter RPD of pre & post-sampling calibration check:	<=20%
Were all QA/QC procedures REQUIRED by the method followed?	Yes
Were all performance/acceptance standards for the required procedures achieved?	Yes
Were significant modifications made to the method as specified in Sect 11.1.2?	No

Parameter	Result	Qualifier	Units	RDL	Dilution Factor
Petroleum Hydrocarbons in Air - Mansfield Lab					
1,3-Butadiene	ND		ug/m3	2.0	1
Methyl tert butyl ether	ND		ug/m3	2.0	1
Benzene	ND		ug/m3	2.0	1
Toluene	9.8		ug/m3	2.0	1
Ethylbenzene	ND		ug/m3	2.0	1
p/m-Xylene	ND		ug/m3	4.0	1
o-Xylene	ND		ug/m3	2.0	1
Naphthalene	ND		ug/m3	2.0	1
C5-C8 Aliphatics, Adjusted	70		ug/m3	12	1
C9-C12 Aliphatics, Adjusted	ND		ug/m3	14	1
C9-C10 Aromatics	ND		ug/m3	10	1

Project Name: UNIFIRST PROPERTY IA / VI **Lab Number:** L1005229

Project Number: 1-2114-2 **Report Date:** 04/29/10

SAMPLE RESULTS

Lab ID:	L1005229-09	Date Collected:	04/12/10 01:55
Client ID:	IA-08	Date Received:	04/12/10
Sample Location:	WOBURN, MA	Field Prep:	Not Specified
Matrix:	Air		
Analytical Method:	96,APH		
Analytical Date:	04/21/10 04:45		
Analyst:	AR		

Quality Control Information

Sample Type:	10 ml/min Composite
Sample Container Type:	Canister - 6 Liter
Sampling Flow Controller:	Mechanical
Sampling Zone:	Unknown
Sampling Flow Meter RPD of pre & post-sampling calibration check:	<=20%
Were all QA/QC procedures REQUIRED by the method followed?	Yes
Were all performance/acceptance standards for the required procedures achieved?	Yes
Were significant modifications made to the method as specified in Sect 11.1.2?	No

Parameter	Result	Qualifier	Units	RDL	Dilution Factor
Petroleum Hydrocarbons in Air - Mansfield Lab					
1,3-Butadiene	ND		ug/m3	2.0	1
Methyl tert butyl ether	ND		ug/m3	2.0	1
Benzene	ND		ug/m3	2.0	1
Toluene	12		ug/m3	2.0	1
Ethylbenzene	ND		ug/m3	2.0	1
p/m-Xylene	4.5		ug/m3	4.0	1
o-Xylene	ND		ug/m3	2.0	1
Naphthalene	ND		ug/m3	2.0	1
C5-C8 Aliphatics, Adjusted	87		ug/m3	12	1
C9-C12 Aliphatics, Adjusted	69		ug/m3	14	1
C9-C10 Aromatics	ND		ug/m3	10	1

Project Name: UNIFIRST PROPERTY IA / VI **Lab Number:** L1005229

Project Number: 1-2114-2 **Report Date:** 04/29/10

SAMPLE RESULTS

Lab ID:	L1005229-10	Date Collected:	04/12/10 02:06
Client ID:	IA-05	Date Received:	04/12/10
Sample Location:	WOBURN, MA	Field Prep:	Not Specified
Matrix:	Air		
Analytical Method:	96,APH		
Analytical Date:	04/21/10 05:24		
Analyst:	AR		

Quality Control Information

Sample Type:	10 ml/min Composite
Sample Container Type:	Canister - 6 Liter
Sampling Flow Controller:	Mechanical
Sampling Zone:	Unknown
Sampling Flow Meter RPD of pre & post-sampling calibration check:	<=20%
Were all QA/QC procedures REQUIRED by the method followed?	Yes
Were all performance/acceptance standards for the required procedures achieved?	Yes
Were significant modifications made to the method as specified in Sect 11.1.2?	No

Parameter	Result	Qualifier	Units	RDL	Dilution Factor
Petroleum Hydrocarbons in Air - Mansfield Lab					
1,3-Butadiene	ND		ug/m3	2.0	1
Methyl tert butyl ether	ND		ug/m3	2.0	1
Benzene	ND		ug/m3	2.0	1
Toluene	8.3		ug/m3	2.0	1
Ethylbenzene	ND		ug/m3	2.0	1
p/m-Xylene	ND		ug/m3	4.0	1
o-Xylene	ND		ug/m3	2.0	1
Naphthalene	ND		ug/m3	2.0	1
C5-C8 Aliphatics, Adjusted	44		ug/m3	12	1
C9-C12 Aliphatics, Adjusted	28		ug/m3	14	1
C9-C10 Aromatics	ND		ug/m3	10	1

Project Name: UNIFIRST PROPERTY IA / VI **Lab Number:** L1005229

Project Number: 1-2114-2 **Report Date:** 04/29/10

SAMPLE RESULTS

Lab ID:	L1005229-11	Date Collected:	04/12/10 01:00
Client ID:	OA-01	Date Received:	04/12/10
Sample Location:	WOBURN, MA	Field Prep:	Not Specified
Matrix:	Air		
Analytical Method:	96,APH		
Analytical Date:	04/21/10 06:02		
Analyst:	AR		

Quality Control Information

Sample Type:	10 ml/min Composite
Sample Container Type:	Canister - 6 Liter
Sampling Flow Controller:	Mechanical
Sampling Zone:	Unknown
Sampling Flow Meter RPD of pre & post-sampling calibration check:	<=20%
Were all QA/QC procedures REQUIRED by the method followed?	Yes
Were all performance/acceptance standards for the required procedures achieved?	Yes
Were significant modifications made to the method as specified in Sect 11.1.2?	No

Parameter	Result	Qualifier	Units	RDL	Dilution Factor
Petroleum Hydrocarbons in Air - Mansfield Lab					
1,3-Butadiene	ND		ug/m3	2.0	1
Methyl tert butyl ether	ND		ug/m3	2.0	1
Benzene	ND		ug/m3	2.0	1
Toluene	2.5		ug/m3	2.0	1
Ethylbenzene	ND		ug/m3	2.0	1
p/m-Xylene	ND		ug/m3	4.0	1
o-Xylene	ND		ug/m3	2.0	1
Naphthalene	ND		ug/m3	2.0	1
C5-C8 Aliphatics, Adjusted	16		ug/m3	12	1
C9-C12 Aliphatics, Adjusted	ND		ug/m3	14	1
C9-C10 Aromatics	ND		ug/m3	10	1

Project Name: UNIFIRST PROPERTY IA / VI **Lab Number:** L1005229

Project Number: 1-2114-2 **Report Date:** 04/29/10

SAMPLE RESULTS

Lab ID:	L1005229-12	D	Date Collected:	04/12/10 05:06
Client ID:	SV-07		Date Received:	04/12/10
Sample Location:	WOBURN, MA		Field Prep:	Not Specified
Matrix:	Soil_Vapor			
Analytical Method:	96,APH			
Analytical Date:	04/23/10 03:40			
Analyst:	RY			

Quality Control Information

Sample Type:	100 ml/min Composite
Sample Container Type:	Canister - 6 Liter
Sampling Flow Controller:	Mechanical
Sampling Zone:	Unknown
Sampling Flow Meter RPD of pre & post-sampling calibration check:	<=20%
Were all QA/QC procedures REQUIRED by the method followed?	Yes
Were all performance/acceptance standards for the required procedures achieved?	Yes
Were significant modifications made to the method as specified in Sect 11.1.2?	No

Parameter	Result	Qualifier	Units	RDL	Dilution Factor
Petroleum Hydrocarbons in Air - Mansfield Lab					
1,3-Butadiene	ND		ug/m3	20	10
Methyl tert butyl ether	ND		ug/m3	20	10
Benzene	ND		ug/m3	20	10
Toluene	ND		ug/m3	20	10
Ethylbenzene	ND		ug/m3	20	10
p/m-Xylene	ND		ug/m3	40	10
o-Xylene	ND		ug/m3	20	10
Naphthalene	ND		ug/m3	20	10
C5-C8 Aliphatics, Adjusted	ND		ug/m3	120	10
C9-C12 Aliphatics, Adjusted	ND		ug/m3	140	10
C9-C10 Aromatics	ND		ug/m3	100	10

Project Name: UNIFIRST PROPERTY IA / VI **Lab Number:** L1005229

Project Number: 1-2114-2 **Report Date:** 04/29/10

SAMPLE RESULTS

Lab ID:	L1005229-13	Date Collected:	04/12/10 02:46
Client ID:	IA-13	Date Received:	04/12/10
Sample Location:	WOBURN, MA	Field Prep:	Not Specified
Matrix:	Air		
Analytical Method:	96,APH		
Analytical Date:	04/21/10 06:40		
Analyst:	AR		

Quality Control Information

Sample Type:	10 ml/min Composite
Sample Container Type:	Canister - 6 Liter
Sampling Flow Controller:	Mechanical
Sampling Zone:	Unknown
Sampling Flow Meter RPD of pre & post-sampling calibration check:	<=20%
Were all QA/QC procedures REQUIRED by the method followed?	Yes
Were all performance/acceptance standards for the required procedures achieved?	Yes
Were significant modifications made to the method as specified in Sect 11.1.2?	No

Parameter	Result	Qualifier	Units	RDL	Dilution Factor
Petroleum Hydrocarbons in Air - Mansfield Lab					
1,3-Butadiene	ND		ug/m3	2.0	1
Methyl tert butyl ether	ND		ug/m3	2.0	1
Benzene	ND		ug/m3	2.0	1
Toluene	5.5		ug/m3	2.0	1
Ethylbenzene	ND		ug/m3	2.0	1
p/m-Xylene	ND		ug/m3	4.0	1
o-Xylene	ND		ug/m3	2.0	1
Naphthalene	6.4		ug/m3	2.0	1
C5-C8 Aliphatics, Adjusted	27		ug/m3	12	1
C9-C12 Aliphatics, Adjusted	21		ug/m3	14	1
C9-C10 Aromatics	ND		ug/m3	10	1

Project Name: UNIFIRST PROPERTY IA / VI **Lab Number:** L1005229

Project Number: 1-2114-2 **Report Date:** 04/29/10

SAMPLE RESULTS

Lab ID:	L1005229-14	Date Collected:	04/12/10 01:37
Client ID:	OA-02	Date Received:	04/12/10
Sample Location:	WOBURN, MA	Field Prep:	Not Specified
Matrix:	Air		
Analytical Method:	96,APH		
Analytical Date:	04/21/10 08:16		
Analyst:	AR		

Quality Control Information

Sample Type:	10 ml/min Composite
Sample Container Type:	Canister - 6 Liter
Sampling Flow Controller:	Mechanical
Sampling Zone:	Unknown
Sampling Flow Meter RPD of pre & post-sampling calibration check:	<=20%
Were all QA/QC procedures REQUIRED by the method followed?	Yes
Were all performance/acceptance standards for the required procedures achieved?	Yes
Were significant modifications made to the method as specified in Sect 11.1.2?	No

Parameter	Result	Qualifier	Units	RDL	Dilution Factor
Petroleum Hydrocarbons in Air - Mansfield Lab					
1,3-Butadiene	ND		ug/m3	2.0	1
Methyl tert butyl ether	ND		ug/m3	2.0	1
Benzene	ND		ug/m3	2.0	1
Toluene	2.7		ug/m3	2.0	1
Ethylbenzene	ND		ug/m3	2.0	1
p/m-Xylene	ND		ug/m3	4.0	1
o-Xylene	ND		ug/m3	2.0	1
Naphthalene	ND		ug/m3	2.0	1
C5-C8 Aliphatics, Adjusted	15		ug/m3	12	1
C9-C12 Aliphatics, Adjusted	ND		ug/m3	14	1
C9-C10 Aromatics	ND		ug/m3	10	1

Project Name: UNIFIRST PROPERTY IA / VI **Lab Number:** L1005229

Project Number: 1-2114-2 **Report Date:** 04/29/10

SAMPLE RESULTS

Lab ID:	L1005229-15	Date Collected:	04/12/10 02:56
Client ID:	IA-DUP01	Date Received:	04/12/10
Sample Location:	WOBURN, MA	Field Prep:	Not Specified
Matrix:	Air		
Analytical Method:	96,APH		
Analytical Date:	04/21/10 14:43		
Analyst:	AR		

Quality Control Information

Sample Type:	10 ml/min Composite
Sample Container Type:	Canister - 6 Liter
Sampling Flow Controller:	Mechanical
Sampling Zone:	Unknown
Sampling Flow Meter RPD of pre & post-sampling calibration check:	<=20%
Were all QA/QC procedures REQUIRED by the method followed?	Yes
Were all performance/acceptance standards for the required procedures achieved?	Yes
Were significant modifications made to the method as specified in Sect 11.1.2?	No

Parameter	Result	Qualifier	Units	RDL	Dilution Factor
Petroleum Hydrocarbons in Air - Mansfield Lab					
1,3-Butadiene	ND		ug/m3	2.0	1
Methyl tert butyl ether	ND		ug/m3	2.0	1
Benzene	ND		ug/m3	2.0	1
Toluene	4.9		ug/m3	2.0	1
Ethylbenzene	ND		ug/m3	2.0	1
p/m-Xylene	ND		ug/m3	4.0	1
o-Xylene	ND		ug/m3	2.0	1
Naphthalene	ND		ug/m3	2.0	1
C5-C8 Aliphatics, Adjusted	20		ug/m3	12	1
C9-C12 Aliphatics, Adjusted	ND		ug/m3	14	1
C9-C10 Aromatics	ND		ug/m3	10	1

Project Name: UNIFIRST PROPERTY IA / VI **Lab Number:** L1005229

Project Number: 1-2114-2 **Report Date:** 04/29/10

SAMPLE RESULTS

Lab ID:	L1005229-16	Date Collected:	04/12/10 02:30
Client ID:	IA-06	Date Received:	04/12/10
Sample Location:	WOBURN, MA	Field Prep:	Not Specified
Matrix:	Air		
Analytical Method:	96,APH		
Analytical Date:	04/21/10 10:15		
Analyst:	AR		

Quality Control Information

Sample Type:	10 ml/min Composite
Sample Container Type:	Canister - 6 Liter
Sampling Flow Controller:	Mechanical
Sampling Zone:	Unknown
Sampling Flow Meter RPD of pre & post-sampling calibration check:	<=20%
Were all QA/QC procedures REQUIRED by the method followed?	Yes
Were all performance/acceptance standards for the required procedures achieved?	Yes
Were significant modifications made to the method as specified in Sect 11.1.2?	No

Parameter	Result	Qualifier	Units	RDL	Dilution Factor
Petroleum Hydrocarbons in Air - Mansfield Lab					
1,3-Butadiene	ND		ug/m3	2.0	1
Methyl tert butyl ether	ND		ug/m3	2.0	1
Benzene	ND		ug/m3	2.0	1
Toluene	10		ug/m3	2.0	1
Ethylbenzene	ND		ug/m3	2.0	1
p/m-Xylene	ND		ug/m3	4.0	1
o-Xylene	ND		ug/m3	2.0	1
Naphthalene	3.4		ug/m3	2.0	1
C5-C8 Aliphatics, Adjusted	51		ug/m3	12	1
C9-C12 Aliphatics, Adjusted	29		ug/m3	14	1
C9-C10 Aromatics	ND		ug/m3	10	1

Project Name: UNIFIRST PROPERTY IA / VI **Lab Number:** L1005229

Project Number: 1-2114-2 **Report Date:** 04/29/10

SAMPLE RESULTS

Lab ID:	L1005229-17	Date Collected:	04/12/10 01:47
Client ID:	OA-DUP1	Date Received:	04/12/10
Sample Location:	WOBURN, MA	Field Prep:	Not Specified
Matrix:	Air		
Analytical Method:	96,APH		
Analytical Date:	04/21/10 11:32		
Analyst:	AR		

Quality Control Information

Sample Type:	10 ml/min Composite
Sample Container Type:	Canister - 6 Liter
Sampling Flow Controller:	Mechanical
Sampling Zone:	Unknown
Sampling Flow Meter RPD of pre & post-sampling calibration check:	<=20%
Were all QA/QC procedures REQUIRED by the method followed?	Yes
Were all performance/acceptance standards for the required procedures achieved?	Yes
Were significant modifications made to the method as specified in Sect 11.1.2?	No

Parameter	Result	Qualifier	Units	RDL	Dilution Factor
Petroleum Hydrocarbons in Air - Mansfield Lab					
1,3-Butadiene	ND		ug/m3	2.0	1
Methyl tert butyl ether	ND		ug/m3	2.0	1
Benzene	ND		ug/m3	2.0	1
Toluene	2.6		ug/m3	2.0	1
Ethylbenzene	ND		ug/m3	2.0	1
p/m-Xylene	ND		ug/m3	4.0	1
o-Xylene	ND		ug/m3	2.0	1
Naphthalene	ND		ug/m3	2.0	1
C5-C8 Aliphatics, Adjusted	14		ug/m3	12	1
C9-C12 Aliphatics, Adjusted	ND		ug/m3	14	1
C9-C10 Aromatics	ND		ug/m3	10	1

Project Name: UNIFIRST PROPERTY IA / VI **Lab Number:** L1005229

Project Number: 1-2114-2 **Report Date:** 04/29/10

SAMPLE RESULTS

Lab ID:	L1005229-18	Date Collected:	04/12/10 02:09
Client ID:	IA-15	Date Received:	04/12/10
Sample Location:	WOBURN, MA	Field Prep:	Not Specified
Matrix:	Air		
Analytical Method:	96,APH		
Analytical Date:	04/21/10 12:10		
Analyst:	AR		

Quality Control Information

Sample Type:	10 ml/min Composite
Sample Container Type:	Canister - 6 Liter
Sampling Flow Controller:	Mechanical
Sampling Zone:	Unknown
Sampling Flow Meter RPD of pre & post-sampling calibration check:	<=20%
Were all QA/QC procedures REQUIRED by the method followed?	Yes
Were all performance/acceptance standards for the required procedures achieved?	Yes
Were significant modifications made to the method as specified in Sect 11.1.2?	No

Parameter	Result	Qualifier	Units	RDL	Dilution Factor
Petroleum Hydrocarbons in Air - Mansfield Lab					
1,3-Butadiene	ND		ug/m3	2.0	1
Methyl tert butyl ether	ND		ug/m3	2.0	1
Benzene	ND		ug/m3	2.0	1
Toluene	5.4		ug/m3	2.0	1
Ethylbenzene	ND		ug/m3	2.0	1
p/m-Xylene	ND		ug/m3	4.0	1
o-Xylene	ND		ug/m3	2.0	1
Naphthalene	ND		ug/m3	2.0	1
C5-C8 Aliphatics, Adjusted	27		ug/m3	12	1
C9-C12 Aliphatics, Adjusted	ND		ug/m3	14	1
C9-C10 Aromatics	ND		ug/m3	10	1

Project Name: UNIFIRST PROPERTY IA / VI **Lab Number:** L1005229

Project Number: 1-2114-2 **Report Date:** 04/29/10

SAMPLE RESULTS

Lab ID:	L1005229-19	Date Collected:	04/12/10 00:39
Client ID:	IA-01	Date Received:	04/12/10
Sample Location:	WOBURN, MA	Field Prep:	Not Specified
Matrix:	Air		
Analytical Method:	96,APH		
Analytical Date:	04/21/10 12:48		
Analyst:	AR		

Quality Control Information

Sample Type:	10 ml/min Composite
Sample Container Type:	Canister - 6 Liter
Sampling Flow Controller:	Mechanical
Sampling Zone:	Unknown
Sampling Flow Meter RPD of pre & post-sampling calibration check:	>20%
Were all QA/QC procedures REQUIRED by the method followed?	Yes
Were all performance/acceptance standards for the required procedures achieved?	Yes
Were significant modifications made to the method as specified in Sect 11.1.2?	No

Parameter	Result	Qualifier	Units	RDL	Dilution Factor
Petroleum Hydrocarbons in Air - Mansfield Lab					
1,3-Butadiene	ND		ug/m3	2.0	1
Methyl tert butyl ether	ND		ug/m3	2.0	1
Benzene	ND		ug/m3	2.0	1
Toluene	6.8		ug/m3	2.0	1
Ethylbenzene	ND		ug/m3	2.0	1
p/m-Xylene	ND		ug/m3	4.0	1
o-Xylene	ND		ug/m3	2.0	1
Naphthalene	2.2		ug/m3	2.0	1
C5-C8 Aliphatics, Adjusted	58		ug/m3	12	1
C9-C12 Aliphatics, Adjusted	87		ug/m3	14	1
C9-C10 Aromatics	ND		ug/m3	10	1

Project Name: UNIFIRST PROPERTY IA / VI **Lab Number:** L1005229

Project Number: 1-2114-2 **Report Date:** 04/29/10

SAMPLE RESULTS

Lab ID:	L1005229-20	Date Collected:	04/12/10 02:46
Client ID:	IA-13A	Date Received:	04/12/10
Sample Location:	WOBURN, MA	Field Prep:	Not Specified
Matrix:	Air		
Analytical Method:	96,APH		
Analytical Date:	04/21/10 13:26		
Analyst:	AR		

Quality Control Information

Sample Type:	10 ml/min Composite
Sample Container Type:	Canister - 6 Liter
Sampling Flow Controller:	Mechanical
Sampling Zone:	Unknown
Sampling Flow Meter RPD of pre & post-sampling calibration check:	<=20%
Were all QA/QC procedures REQUIRED by the method followed?	Yes
Were all performance/acceptance standards for the required procedures achieved?	Yes
Were significant modifications made to the method as specified in Sect 11.1.2?	No

Parameter	Result	Qualifier	Units	RDL	Dilution Factor
Petroleum Hydrocarbons in Air - Mansfield Lab					
1,3-Butadiene	ND		ug/m3	2.0	1
Methyl tert butyl ether	ND		ug/m3	2.0	1
Benzene	ND		ug/m3	2.0	1
Toluene	5.4		ug/m3	2.0	1
Ethylbenzene	ND		ug/m3	2.0	1
p/m-Xylene	ND		ug/m3	4.0	1
o-Xylene	ND		ug/m3	2.0	1
Naphthalene	15		ug/m3	2.0	1
C5-C8 Aliphatics, Adjusted	32		ug/m3	12	1
C9-C12 Aliphatics, Adjusted	18		ug/m3	14	1
C9-C10 Aromatics	ND		ug/m3	10	1

Project Name: UNIFIRST PROPERTY IA / VI **Lab Number:** L1005229

Project Number: 1-2114-2 **Report Date:** 04/29/10

SAMPLE RESULTS

Lab ID:	L1005229-21	Date Collected:	04/12/10 02:27
Client ID:	IA-10	Date Received:	04/12/10
Sample Location:	WOBURN, MA	Field Prep:	Not Specified
Matrix:	Air		
Analytical Method:	96,APH		
Analytical Date:	04/21/10 14:05		
Analyst:	AR		

Quality Control Information

Sample Type:	10 ml/min Composite
Sample Container Type:	Canister - 6 Liter
Sampling Flow Controller:	Mechanical
Sampling Zone:	Unknown
Sampling Flow Meter RPD of pre & post-sampling calibration check:	<=20%
Were all QA/QC procedures REQUIRED by the method followed?	Yes
Were all performance/acceptance standards for the required procedures achieved?	Yes
Were significant modifications made to the method as specified in Sect 11.1.2?	No

Parameter	Result	Qualifier	Units	RDL	Dilution Factor
Petroleum Hydrocarbons in Air - Mansfield Lab					
1,3-Butadiene	ND		ug/m3	2.0	1
Methyl tert butyl ether	ND		ug/m3	2.0	1
Benzene	ND		ug/m3	2.0	1
Toluene	14		ug/m3	2.0	1
Ethylbenzene	ND		ug/m3	2.0	1
p/m-Xylene	ND		ug/m3	4.0	1
o-Xylene	ND		ug/m3	2.0	1
Naphthalene	4.2		ug/m3	2.0	1
C5-C8 Aliphatics, Adjusted	52		ug/m3	12	1
C9-C12 Aliphatics, Adjusted	39		ug/m3	14	1
C9-C10 Aromatics	ND		ug/m3	10	1

Project Name: UNIFIRST PROPERTY IA / VI **Lab Number:** L1005229

Project Number: 1-2114-2 **Report Date:** 04/29/10

SAMPLE RESULTS

Lab ID:	L1005229-22	Date Collected:	04/12/10 02:01
Client ID:	IA-03	Date Received:	04/12/10
Sample Location:	WOBURN, MA	Field Prep:	Not Specified
Matrix:	Air		
Analytical Method:	96,APH		
Analytical Date:	04/21/10 23:28		
Analyst:	RY		

Quality Control Information

Sample Type:	10 ml/min Composite
Sample Container Type:	Canister - 6 Liter
Sampling Flow Controller:	Mechanical
Sampling Zone:	Unknown
Sampling Flow Meter RPD of pre & post-sampling calibration check:	<=20%
Were all QA/QC procedures REQUIRED by the method followed?	Yes
Were all performance/acceptance standards for the required procedures achieved?	Yes
Were significant modifications made to the method as specified in Sect 11.1.2?	No

Parameter	Result	Qualifier	Units	RDL	Dilution Factor
Petroleum Hydrocarbons in Air - Mansfield Lab					
1,3-Butadiene	ND		ug/m3	2.0	1
Methyl tert butyl ether	ND		ug/m3	2.0	1
Benzene	ND		ug/m3	2.0	1
Toluene	10		ug/m3	2.0	1
Ethylbenzene	ND		ug/m3	2.0	1
p/m-Xylene	ND		ug/m3	4.0	1
o-Xylene	ND		ug/m3	2.0	1
Naphthalene	2.0		ug/m3	2.0	1
C5-C8 Aliphatics, Adjusted	61		ug/m3	12	1
C9-C12 Aliphatics, Adjusted	61		ug/m3	14	1
C9-C10 Aromatics	ND		ug/m3	10	1

Project Name: UNIFIRST PROPERTY IA / VI **Lab Number:** L1005229

Project Number: 1-2114-2 **Report Date:** 04/29/10

SAMPLE RESULTS

Lab ID:	L1005229-23	Date Collected:	04/12/10 02:36
Client ID:	IA-07	Date Received:	04/12/10
Sample Location:	WOBURN, MA	Field Prep:	Not Specified
Matrix:	Air		
Analytical Method:	96,APH		
Analytical Date:	04/22/10 00:06		
Analyst:	RY		

Quality Control Information

Sample Type:	10 ml/min Composite
Sample Container Type:	Canister - 6 Liter
Sampling Flow Controller:	Mechanical
Sampling Zone:	Unknown
Sampling Flow Meter RPD of pre & post-sampling calibration check:	<=20%
Were all QA/QC procedures REQUIRED by the method followed?	Yes
Were all performance/acceptance standards for the required procedures achieved?	Yes
Were significant modifications made to the method as specified in Sect 11.1.2?	No

Parameter	Result	Qualifier	Units	RDL	Dilution Factor
Petroleum Hydrocarbons in Air - Mansfield Lab					
1,3-Butadiene	ND		ug/m3	2.0	1
Methyl tert butyl ether	ND		ug/m3	2.0	1
Benzene	ND		ug/m3	2.0	1
Toluene	12		ug/m3	2.0	1
Ethylbenzene	ND		ug/m3	2.0	1
p/m-Xylene	ND		ug/m3	4.0	1
o-Xylene	ND		ug/m3	2.0	1
Naphthalene	4.1		ug/m3	2.0	1
C5-C8 Aliphatics, Adjusted	46		ug/m3	12	1
C9-C12 Aliphatics, Adjusted	32		ug/m3	14	1
C9-C10 Aromatics	ND		ug/m3	10	1

Project Name: UNIFIRST PROPERTY IA / VI **Lab Number:** L1005229

Project Number: 1-2114-2 **Report Date:** 04/29/10

SAMPLE RESULTS

Lab ID:	L1005229-24	Date Collected:	04/12/10 02:22
Client ID:	IA-02	Date Received:	04/12/10
Sample Location:	WOBURN, MA	Field Prep:	Not Specified
Matrix:	Air		
Analytical Method:	96,APH		
Analytical Date:	04/22/10 00:45		
Analyst:	RY		

Quality Control Information

Sample Type:	10 ml/min Composite
Sample Container Type:	Canister - 6 Liter
Sampling Flow Controller:	Mechanical
Sampling Zone:	Unknown
Sampling Flow Meter RPD of pre & post-sampling calibration check:	<=20%
Were all QA/QC procedures REQUIRED by the method followed?	Yes
Were all performance/acceptance standards for the required procedures achieved?	Yes
Were significant modifications made to the method as specified in Sect 11.1.2?	No

Parameter	Result	Qualifier	Units	RDL	Dilution Factor
Petroleum Hydrocarbons in Air - Mansfield Lab					
1,3-Butadiene	ND		ug/m3	2.0	1
Methyl tert butyl ether	ND		ug/m3	2.0	1
Benzene	ND		ug/m3	2.0	1
Toluene	7.7		ug/m3	2.0	1
Ethylbenzene	ND		ug/m3	2.0	1
p/m-Xylene	ND		ug/m3	4.0	1
o-Xylene	ND		ug/m3	2.0	1
Naphthalene	2.2		ug/m3	2.0	1
C5-C8 Aliphatics, Adjusted	66		ug/m3	12	1
C9-C12 Aliphatics, Adjusted	83		ug/m3	14	1
C9-C10 Aromatics	ND		ug/m3	10	1

Project Name: UNIFIRST PROPERTY IA / VI **Lab Number:** L1005229

Project Number: 1-2114-2 **Report Date:** 04/29/10

SAMPLE RESULTS

Lab ID:	L1005229-25	Date Collected:	04/12/10 05:07
Client ID:	SV-04	Date Received:	04/12/10
Sample Location:	WOBURN, MA	Field Prep:	Not Specified
Matrix:	Soil_Vapor		
Analytical Method:	96,APH		
Analytical Date:	04/22/10 02:39		
Analyst:	RY		

Quality Control Information

Sample Type:	100 ml/min Composite
Sample Container Type:	Canister - 6 Liter
Sampling Flow Controller:	Mechanical
Sampling Zone:	Unknown
Sampling Flow Meter RPD of pre & post-sampling calibration check:	<=20%
Were all QA/QC procedures REQUIRED by the method followed?	Yes
Were all performance/acceptance standards for the required procedures achieved?	Yes
Were significant modifications made to the method as specified in Sect 11.1.2?	No

Parameter	Result	Qualifier	Units	RDL	Dilution Factor
Petroleum Hydrocarbons in Air - Mansfield Lab					
1,3-Butadiene	ND		ug/m3	2.0	1
Methyl tert butyl ether	ND		ug/m3	2.0	1
Benzene	ND		ug/m3	2.0	1
Toluene	ND		ug/m3	2.0	1
Ethylbenzene	ND		ug/m3	2.0	1
p/m-Xylene	ND		ug/m3	4.0	1
o-Xylene	ND		ug/m3	2.0	1
Naphthalene	ND		ug/m3	2.0	1
C5-C8 Aliphatics, Adjusted	20		ug/m3	12	1
C9-C12 Aliphatics, Adjusted	300		ug/m3	14	1
C9-C10 Aromatics	ND		ug/m3	10	1

Project Name: UNIFIRST PROPERTY IA / VI **Lab Number:** L1005229

Project Number: 1-2114-2 **Report Date:** 04/29/10

SAMPLE RESULTS

Lab ID:	L1005229-26	Date Collected:	04/12/10 04:55
Client ID:	SV-14	Date Received:	04/12/10
Sample Location:	WOBURN, MA	Field Prep:	Not Specified
Matrix:	Soil_Vapor		
Analytical Method:	96,APH		
Analytical Date:	04/22/10 05:49		
Analyst:	RY		

Quality Control Information

Sample Type:	100 ml/min Composite
Sample Container Type:	Canister - 6 Liter
Sampling Flow Controller:	Mechanical
Sampling Zone:	Unknown
Sampling Flow Meter RPD of pre & post-sampling calibration check:	<=20%
Were all QA/QC procedures REQUIRED by the method followed?	Yes
Were all performance/acceptance standards for the required procedures achieved?	Yes
Were significant modifications made to the method as specified in Sect 11.1.2?	No

Parameter	Result	Qualifier	Units	RDL	Dilution Factor
Petroleum Hydrocarbons in Air - Mansfield Lab					
1,3-Butadiene	ND		ug/m3	2.0	1
Methyl tert butyl ether	ND		ug/m3	2.0	1
Benzene	ND		ug/m3	2.0	1
Toluene	ND		ug/m3	2.0	1
Ethylbenzene	ND		ug/m3	2.0	1
p/m-Xylene	ND		ug/m3	4.0	1
o-Xylene	ND		ug/m3	2.0	1
Naphthalene	ND		ug/m3	2.0	1
C5-C8 Aliphatics, Adjusted	13		ug/m3	12	1
C9-C12 Aliphatics, Adjusted	18		ug/m3	14	1
C9-C10 Aromatics	ND		ug/m3	10	1

Project Name: UNIFIRST PROPERTY IA / VI **Lab Number:** L1005229

Project Number: 1-2114-2 **Report Date:** 04/29/10

SAMPLE RESULTS

Lab ID:	L1005229-27	D	Date Collected:	04/12/10 05:59
Client ID:	SV-DUP01		Date Received:	04/12/10
Sample Location:	WOBURN, MA		Field Prep:	Not Specified
Matrix:	Soil_Vapor			
Analytical Method:	96,APH			
Analytical Date:	04/23/10 03:03			
Analyst:	RY			

Quality Control Information

Sample Type:	100 ml/min Composite
Sample Container Type:	Canister - 6 Liter
Sampling Flow Controller:	Mechanical
Sampling Zone:	Unknown
Sampling Flow Meter RPD of pre & post-sampling calibration check:	<=20%
Were all QA/QC procedures REQUIRED by the method followed?	Yes
Were all performance/acceptance standards for the required procedures achieved?	Yes
Were significant modifications made to the method as specified in Sect 11.1.2?	No

Parameter	Result	Qualifier	Units	RDL	Dilution Factor
Petroleum Hydrocarbons in Air - Mansfield Lab					
1,3-Butadiene	ND		ug/m3	20	10
Methyl tert butyl ether	ND		ug/m3	20	10
Benzene	ND		ug/m3	20	10
Toluene	ND		ug/m3	20	10
Ethylbenzene	ND		ug/m3	20	10
p/m-Xylene	ND		ug/m3	40	10
o-Xylene	ND		ug/m3	20	10
Naphthalene	ND		ug/m3	20	10
C5-C8 Aliphatics, Adjusted	ND		ug/m3	120	10
C9-C12 Aliphatics, Adjusted	ND		ug/m3	140	10
C9-C10 Aromatics	ND		ug/m3	100	10

Project Name: UNIFIRST PROPERTY IA / VI **Lab Number:** L1005229

Project Number: 1-2114-2 **Report Date:** 04/29/10

SAMPLE RESULTS

Lab ID:	L1005229-28	D	Date Collected:	04/12/10 05:49
Client ID:	SV-13		Date Received:	04/12/10
Sample Location:	WOBURN, MA		Field Prep:	Not Specified
Matrix:	Soil_Vapor			
Analytical Method:	96,APH			
Analytical Date:	04/23/10 02:27			
Analyst:	RY			

Quality Control Information

Sample Type:	100 ml/min Composite
Sample Container Type:	Canister - 6 Liter
Sampling Flow Controller:	Mechanical
Sampling Zone:	Unknown
Sampling Flow Meter RPD of pre & post-sampling calibration check:	<=20%
Were all QA/QC procedures REQUIRED by the method followed?	Yes
Were all performance/acceptance standards for the required procedures achieved?	Yes
Were significant modifications made to the method as specified in Sect 11.1.2?	No

Parameter	Result	Qualifier	Units	RDL	Dilution Factor
Petroleum Hydrocarbons in Air - Mansfield Lab					
1,3-Butadiene	ND		ug/m3	20	10
Methyl tert butyl ether	ND		ug/m3	20	10
Benzene	ND		ug/m3	20	10
Toluene	ND		ug/m3	20	10
Ethylbenzene	ND		ug/m3	20	10
p/m-Xylene	ND		ug/m3	40	10
o-Xylene	ND		ug/m3	20	10
Naphthalene	ND		ug/m3	20	10
C5-C8 Aliphatics, Adjusted	ND		ug/m3	120	10
C9-C12 Aliphatics, Adjusted	ND		ug/m3	140	10
C9-C10 Aromatics	ND		ug/m3	100	10

Project Name: UNIFIRST PROPERTY IA / VI **Lab Number:** L1005229

Project Number: 1-2114-2 **Report Date:** 04/29/10

SAMPLE RESULTS

Lab ID:	L1005229-29	Date Collected:	04/12/10 04:48
Client ID:	SV-03	Date Received:	04/12/10
Sample Location:	WOBURN, MA	Field Prep:	Not Specified
Matrix:	Soil_Vapor		
Analytical Method:	96,APH		
Analytical Date:	04/22/10 03:55		
Analyst:	RY		

Quality Control Information

Sample Type:	100 ml/min Composite
Sample Container Type:	Canister - 6 Liter
Sampling Flow Controller:	Mechanical
Sampling Zone:	Unknown
Sampling Flow Meter RPD of pre & post-sampling calibration check:	<=20%
Were all QA/QC procedures REQUIRED by the method followed?	Yes
Were all performance/acceptance standards for the required procedures achieved?	Yes
Were significant modifications made to the method as specified in Sect 11.1.2?	No

Parameter	Result	Qualifier	Units	RDL	Dilution Factor
Petroleum Hydrocarbons in Air - Mansfield Lab					
1,3-Butadiene	ND		ug/m3	2.0	1
Methyl tert butyl ether	ND		ug/m3	2.0	1
Benzene	ND		ug/m3	2.0	1
Toluene	ND		ug/m3	2.0	1
Ethylbenzene	ND		ug/m3	2.0	1
p/m-Xylene	ND		ug/m3	4.0	1
o-Xylene	ND		ug/m3	2.0	1
Naphthalene	ND		ug/m3	2.0	1
C5-C8 Aliphatics, Adjusted	13		ug/m3	12	1
C9-C12 Aliphatics, Adjusted	20		ug/m3	14	1
C9-C10 Aromatics	ND		ug/m3	10	1

Project Name: UNIFIRST PROPERTY IA / VI **Lab Number:** L1005229

Project Number: 1-2114-2 **Report Date:** 04/29/10

SAMPLE RESULTS

Lab ID:	L1005229-30	D	Date Collected:	04/12/10 06:26
Client ID:	SV-15		Date Received:	04/12/10
Sample Location:	WOBURN, MA		Field Prep:	Not Specified
Matrix:	Soil_Vapor			
Analytical Method:	96,APH			
Analytical Date:	04/22/10 22:46			
Analyst:	RY			

Quality Control Information

Sample Type:	100 ml/min Composite
Sample Container Type:	Canister - 6 Liter
Sampling Flow Controller:	Mechanical
Sampling Zone:	Unknown
Sampling Flow Meter RPD of pre & post-sampling calibration check:	<=20%
Were all QA/QC procedures REQUIRED by the method followed?	Yes
Were all performance/acceptance standards for the required procedures achieved?	Yes
Were significant modifications made to the method as specified in Sect 11.1.2?	No

Parameter	Result	Qualifier	Units	RDL	Dilution Factor
Petroleum Hydrocarbons in Air - Mansfield Lab					
1,3-Butadiene	ND		ug/m3	20	10
Methyl tert butyl ether	ND		ug/m3	20	10
Benzene	ND		ug/m3	20	10
Toluene	ND		ug/m3	20	10
Ethylbenzene	ND		ug/m3	20	10
p/m-Xylene	ND		ug/m3	40	10
o-Xylene	ND		ug/m3	20	10
Naphthalene	ND		ug/m3	20	10
C5-C8 Aliphatics, Adjusted	ND		ug/m3	120	10
C9-C12 Aliphatics, Adjusted	ND		ug/m3	140	10
C9-C10 Aromatics	ND		ug/m3	100	10

Project Name: UNIFIRST PROPERTY IA / VI **Lab Number:** L1005229

Project Number: 1-2114-2 **Report Date:** 04/29/10

SAMPLE RESULTS

Lab ID:	L1005229-31	D	Date Collected:	04/12/10 05:24
Client ID:	SV-12		Date Received:	04/12/10
Sample Location:	WOBURN, MA		Field Prep:	Not Specified
Matrix:	Soil_Vapor			
Analytical Method:	96,APH			
Analytical Date:	04/23/10 00:00			
Analyst:	RY			

Quality Control Information

Sample Type:	100 ml/min Composite
Sample Container Type:	Canister - 6 Liter
Sampling Flow Controller:	Mechanical
Sampling Zone:	Unknown
Sampling Flow Meter RPD of pre & post-sampling calibration check:	<=20%
Were all QA/QC procedures REQUIRED by the method followed?	Yes
Were all performance/acceptance standards for the required procedures achieved?	Yes
Were significant modifications made to the method as specified in Sect 11.1.2?	No

Parameter	Result	Qualifier	Units	RDL	Dilution Factor
Petroleum Hydrocarbons in Air - Mansfield Lab					
1,3-Butadiene	ND		ug/m3	20	10
Methyl tert butyl ether	ND		ug/m3	20	10
Benzene	ND		ug/m3	20	10
Toluene	ND		ug/m3	20	10
Ethylbenzene	ND		ug/m3	20	10
p/m-Xylene	ND		ug/m3	40	10
o-Xylene	ND		ug/m3	20	10
Naphthalene	ND		ug/m3	20	10
C5-C8 Aliphatics, Adjusted	ND		ug/m3	120	10
C9-C12 Aliphatics, Adjusted	ND		ug/m3	140	10
C9-C10 Aromatics	ND		ug/m3	100	10

Project Name: UNIFIRST PROPERTY IA / VI **Lab Number:** L1005229

Project Number: 1-2114-2 **Report Date:** 04/29/10

SAMPLE RESULTS

Lab ID:	L1005229-32	D	Date Collected:	04/12/10 05:15
Client ID:	SV-05		Date Received:	04/12/10
Sample Location:	WOBURN, MA		Field Prep:	Not Specified
Matrix:	Soil_Vapor			
Analytical Method:	96,APH			
Analytical Date:	04/23/10 04:54			
Analyst:	RY			

Quality Control Information

Sample Type:	100 ml/min Composite
Sample Container Type:	Canister - 6 Liter
Sampling Flow Controller:	Mechanical
Sampling Zone:	Unknown
Sampling Flow Meter RPD of pre & post-sampling calibration check:	<=20%
Were all QA/QC procedures REQUIRED by the method followed?	Yes
Were all performance/acceptance standards for the required procedures achieved?	Yes
Were significant modifications made to the method as specified in Sect 11.1.2?	No

Parameter	Result	Qualifier	Units	RDL	Dilution Factor
Petroleum Hydrocarbons in Air - Mansfield Lab					
1,3-Butadiene	ND		ug/m3	20	10
Methyl tert butyl ether	ND		ug/m3	20	10
Benzene	ND		ug/m3	20	10
Toluene	ND		ug/m3	20	10
Ethylbenzene	ND		ug/m3	20	10
p/m-Xylene	ND		ug/m3	40	10
o-Xylene	ND		ug/m3	20	10
Naphthalene	ND		ug/m3	20	10
C5-C8 Aliphatics, Adjusted	ND		ug/m3	120	10
C9-C12 Aliphatics, Adjusted	ND		ug/m3	140	10
C9-C10 Aromatics	ND		ug/m3	100	10

Project Name: UNIFIRST PROPERTY IA / VI **Lab Number:** L1005229

Project Number: 1-2114-2 **Report Date:** 04/29/10

SAMPLE RESULTS

Lab ID:	L1005229-33	D	Date Collected:	04/12/10 05:14
Client ID:	SV-10		Date Received:	04/12/10
Sample Location:	WOBURN, MA		Field Prep:	Not Specified
Matrix:	Soil_Vapor			
Analytical Method:	96,APH			
Analytical Date:	04/23/10 04:17			
Analyst:	RY			

Quality Control Information

Sample Type:	100 ml/min Composite
Sample Container Type:	Canister - 6 Liter
Sampling Flow Controller:	Mechanical
Sampling Zone:	Unknown
Sampling Flow Meter RPD of pre & post-sampling calibration check:	<=20%
Were all QA/QC procedures REQUIRED by the method followed?	Yes
Were all performance/acceptance standards for the required procedures achieved?	Yes
Were significant modifications made to the method as specified in Sect 11.1.2?	No

Parameter	Result	Qualifier	Units	RDL	Dilution Factor
Petroleum Hydrocarbons in Air - Mansfield Lab					
1,3-Butadiene	ND		ug/m3	20	10
Methyl tert butyl ether	ND		ug/m3	20	10
Benzene	ND		ug/m3	20	10
Toluene	ND		ug/m3	20	10
Ethylbenzene	ND		ug/m3	20	10
p/m-Xylene	ND		ug/m3	40	10
o-Xylene	ND		ug/m3	20	10
Naphthalene	ND		ug/m3	20	10
C5-C8 Aliphatics, Adjusted	ND		ug/m3	120	10
C9-C12 Aliphatics, Adjusted	ND		ug/m3	140	10
C9-C10 Aromatics	ND		ug/m3	100	10

Project Name: UNIFIRST PROPERTY IA / VI **Lab Number:** L1005229

Project Number: 1-2114-2 **Report Date:** 04/29/10

SAMPLE RESULTS

Lab ID:	L1005229-34	D	Date Collected:	04/12/10 06:12
Client ID:	SV-DUP02		Date Received:	04/12/10
Sample Location:	WOBURN, MA		Field Prep:	Not Specified
Matrix:	Soil_Vapor			
Analytical Method:	96,APH			
Analytical Date:	04/23/10 01:14			
Analyst:	RY			

Quality Control Information

Sample Type:	100 ml/min Composite
Sample Container Type:	Canister - 6 Liter
Sampling Flow Controller:	Mechanical
Sampling Zone:	Unknown
Sampling Flow Meter RPD of pre & post-sampling calibration check:	<=20%
Were all QA/QC procedures REQUIRED by the method followed?	Yes
Were all performance/acceptance standards for the required procedures achieved?	Yes
Were significant modifications made to the method as specified in Sect 11.1.2?	No

Parameter	Result	Qualifier	Units	RDL	Dilution Factor
Petroleum Hydrocarbons in Air - Mansfield Lab					
1,3-Butadiene	ND		ug/m3	19	9.4
Methyl tert butyl ether	ND		ug/m3	19	9.4
Benzene	ND		ug/m3	19	9.4
Toluene	ND		ug/m3	19	9.4
Ethylbenzene	ND		ug/m3	19	9.4
p/m-Xylene	ND		ug/m3	38	9.4
o-Xylene	ND		ug/m3	19	9.4
Naphthalene	ND		ug/m3	19	9.4
C5-C8 Aliphatics, Adjusted	ND		ug/m3	110	9.4
C9-C12 Aliphatics, Adjusted	ND		ug/m3	130	9.4
C9-C10 Aromatics	ND		ug/m3	94	9.4

Project Name: UNIFIRST PROPERTY IA / VI **Lab Number:** L1005229

Project Number: 1-2114-2 **Report Date:** 04/29/10

SAMPLE RESULTS

Lab ID:	L1005229-35	D	Date Collected:	04/12/10 04:47
Client ID:	SV-09		Date Received:	04/12/10
Sample Location:	WOBURN, MA		Field Prep:	Not Specified
Matrix:	Soil_Vapor			
Analytical Method:	96,APH			
Analytical Date:	04/23/10 01:50			
Analyst:	RY			

Quality Control Information

Sample Type:	100 ml/min Composite
Sample Container Type:	Canister - 6 Liter
Sampling Flow Controller:	Mechanical
Sampling Zone:	Unknown
Sampling Flow Meter RPD of pre & post-sampling calibration check:	<=20%
Were all QA/QC procedures REQUIRED by the method followed?	Yes
Were all performance/acceptance standards for the required procedures achieved?	Yes
Were significant modifications made to the method as specified in Sect 11.1.2?	No

Parameter	Result	Qualifier	Units	RDL	Dilution Factor
Petroleum Hydrocarbons in Air - Mansfield Lab					
1,3-Butadiene	ND		ug/m3	20	10
Methyl tert butyl ether	ND		ug/m3	20	10
Benzene	ND		ug/m3	20	10
Toluene	ND		ug/m3	20	10
Ethylbenzene	ND		ug/m3	20	10
p/m-Xylene	ND		ug/m3	40	10
o-Xylene	ND		ug/m3	20	10
Naphthalene	ND		ug/m3	20	10
C5-C8 Aliphatics, Adjusted	ND		ug/m3	120	10
C9-C12 Aliphatics, Adjusted	ND		ug/m3	140	10
C9-C10 Aromatics	ND		ug/m3	100	10

Project Name: UNIFIRST PROPERTY IA / VI **Lab Number:** L1005229

Project Number: 1-2114-2 **Report Date:** 04/29/10

SAMPLE RESULTS

Lab ID:	L1005229-36	Date Collected:	04/12/10 04:37
Client ID:	SV-01	Date Received:	04/12/10
Sample Location:	WOBURN, MA	Field Prep:	Not Specified
Matrix:	Soil_Vapor		
Analytical Method:	96,APH		
Analytical Date:	04/22/10 02:01		
Analyst:	RY		

Quality Control Information

Sample Type:	100 ml/min Composite
Sample Container Type:	Canister - 6 Liter
Sampling Flow Controller:	Mechanical
Sampling Zone:	Unknown
Sampling Flow Meter RPD of pre & post-sampling calibration check:	<=20%
Were all QA/QC procedures REQUIRED by the method followed?	Yes
Were all performance/acceptance standards for the required procedures achieved?	Yes
Were significant modifications made to the method as specified in Sect 11.1.2?	No

Parameter	Result	Qualifier	Units	RDL	Dilution Factor
Petroleum Hydrocarbons in Air - Mansfield Lab					
1,3-Butadiene	ND		ug/m3	2.0	1
Methyl tert butyl ether	ND		ug/m3	2.0	1
Benzene	ND		ug/m3	2.0	1
Toluene	ND		ug/m3	2.0	1
Ethylbenzene	ND		ug/m3	2.0	1
p/m-Xylene	ND		ug/m3	4.0	1
o-Xylene	ND		ug/m3	2.0	1
Naphthalene	ND		ug/m3	2.0	1
C5-C8 Aliphatics, Adjusted	22		ug/m3	12	1
C9-C12 Aliphatics, Adjusted	58		ug/m3	14	1
C9-C10 Aromatics	ND		ug/m3	10	1

Project Name: UNIFIRST PROPERTY IA / VI **Lab Number:** L1005229

Project Number: 1-2114-2 **Report Date:** 04/29/10

SAMPLE RESULTS

Lab ID:	L1005229-37	Date Collected:	04/12/10 06:32
Client ID:	SV-08	Date Received:	04/12/10
Sample Location:	WOBURN, MA	Field Prep:	Not Specified
Matrix:	Soil_Vapor		
Analytical Method:	96,APH		
Analytical Date:	04/22/10 07:05		
Analyst:	RY		

Quality Control Information

Sample Type:	100 ml/min Composite
Sample Container Type:	Canister - 6 Liter
Sampling Flow Controller:	Mechanical
Sampling Zone:	Unknown
Sampling Flow Meter RPD of pre & post-sampling calibration check:	<=20%
Were all QA/QC procedures REQUIRED by the method followed?	Yes
Were all performance/acceptance standards for the required procedures achieved?	Yes
Were significant modifications made to the method as specified in Sect 11.1.2?	No

Parameter	Result	Qualifier	Units	RDL	Dilution Factor
Petroleum Hydrocarbons in Air - Mansfield Lab					
1,3-Butadiene	ND		ug/m3	2.0	1
Methyl tert butyl ether	ND		ug/m3	2.0	1
Benzene	ND		ug/m3	2.0	1
Toluene	ND		ug/m3	2.0	1
Ethylbenzene	ND		ug/m3	2.0	1
p/m-Xylene	ND		ug/m3	4.0	1
o-Xylene	ND		ug/m3	2.0	1
Naphthalene	ND		ug/m3	2.0	1
C5-C8 Aliphatics, Adjusted	46		ug/m3	12	1
C9-C12 Aliphatics, Adjusted	86		ug/m3	14	1
C9-C10 Aromatics	ND		ug/m3	10	1

Project Name: UNIFIRST PROPERTY IA / VI **Lab Number:** L1005229

Project Number: 1-2114-2 **Report Date:** 04/29/10

SAMPLE RESULTS

Lab ID:	L1005229-38	Date Collected:	
Client ID:	TRIP BLANK	Date Received:	04/12/10
Sample Location:	WOBURN, MA	Field Prep:	Not Specified
Matrix:	Air		
Analytical Method:	96,APH		
Analytical Date:	04/22/10 01:22		
Analyst:	RY		

Quality Control Information

Sample Type:	Trip Blank
Sample Container Type:	Canister - 6 Liter
Sampling Flow Controller:	Mechanical
Sampling Zone:	Unknown
Sampling Flow Meter RPD of pre & post-sampling calibration check:	<=20%
Were all QA/QC procedures REQUIRED by the method followed?	Yes
Were all performance/acceptance standards for the required procedures achieved?	Yes
Were significant modifications made to the method as specified in Sect 11.1.2?	No

Parameter	Result	Qualifier	Units	RDL	Dilution Factor
Petroleum Hydrocarbons in Air - Mansfield Lab					
1,3-Butadiene	ND		ug/m3	2.0	1
Methyl tert butyl ether	ND		ug/m3	2.0	1
Benzene	ND		ug/m3	2.0	1
Toluene	ND		ug/m3	2.0	1
Ethylbenzene	ND		ug/m3	2.0	1
p/m-Xylene	ND		ug/m3	4.0	1
o-Xylene	ND		ug/m3	2.0	1
Naphthalene	ND		ug/m3	2.0	1
C5-C8 Aliphatics, Adjusted	ND		ug/m3	12	1
C9-C12 Aliphatics, Adjusted	14		ug/m3	14	1
C9-C10 Aromatics	ND		ug/m3	10	1

Project Name: UNIFIRST PROPERTY IA / VI **Lab Number:** L1005229

Project Number: 1-2114-2 **Report Date:** 04/29/10

SAMPLE RESULTS

Lab ID:	L1005229-39	D	Date Collected:	04/12/10 05:22
Client ID:	SV-06		Date Received:	04/12/10
Sample Location:	WOBURN, MA		Field Prep:	Not Specified
Matrix:	Soil_Vapor			
Analytical Method:	96,APH			
Analytical Date:	04/23/10 05:30			
Analyst:	RY			

Quality Control Information

Sample Type:	100 ml/min Composite
Sample Container Type:	Canister - 6 Liter
Sampling Flow Controller:	Mechanical
Sampling Zone:	Unknown
Sampling Flow Meter RPD of pre & post-sampling calibration check:	<=20%
Were all QA/QC procedures REQUIRED by the method followed?	Yes
Were all performance/acceptance standards for the required procedures achieved?	Yes
Were significant modifications made to the method as specified in Sect 11.1.2?	No

Parameter	Result	Qualifier	Units	RDL	Dilution Factor
Petroleum Hydrocarbons in Air - Mansfield Lab					
1,3-Butadiene	ND		ug/m3	20	10
Methyl tert butyl ether	ND		ug/m3	20	10
Benzene	ND		ug/m3	20	10
Toluene	ND		ug/m3	20	10
Ethylbenzene	ND		ug/m3	20	10
p/m-Xylene	ND		ug/m3	40	10
o-Xylene	ND		ug/m3	20	10
Naphthalene	ND		ug/m3	20	10
C5-C8 Aliphatics, Adjusted	ND		ug/m3	120	10
C9-C12 Aliphatics, Adjusted	ND		ug/m3	140	10
C9-C10 Aromatics	ND		ug/m3	100	10

Project Name: UNIFIRST PROPERTY IA / VI **Lab Number:** L1005229

Project Number: 1-2114-2 **Report Date:** 04/29/10

SAMPLE RESULTS

Lab ID:	L1005229-40	D	Date Collected:	04/12/10 07:55
Client ID:	SV-02		Date Received:	04/12/10
Sample Location:	WOBURN, MA		Field Prep:	Not Specified
Matrix:	Soil_Vapor			
Analytical Method:	96,APH			
Analytical Date:	04/22/10 04:34			
Analyst:	RY			

Quality Control Information

Sample Type:	100 ml/min Composite
Sample Container Type:	Canister - 6 Liter
Sampling Flow Controller:	Mechanical
Sampling Zone:	Unknown
Sampling Flow Meter RPD of pre & post-sampling calibration check:	<=20%
Were all QA/QC procedures REQUIRED by the method followed?	Yes
Were all performance/acceptance standards for the required procedures achieved?	Yes
Were significant modifications made to the method as specified in Sect 11.1.2?	No

Parameter	Result	Qualifier	Units	RDL	Dilution Factor
Petroleum Hydrocarbons in Air - Mansfield Lab					
1,3-Butadiene	ND		ug/m3	5.4	2.7
Methyl tert butyl ether	ND		ug/m3	5.4	2.7
Benzene	ND		ug/m3	5.4	2.7
Toluene	ND		ug/m3	5.4	2.7
Ethylbenzene	ND		ug/m3	5.4	2.7
p/m-Xylene	ND		ug/m3	11	2.7
o-Xylene	ND		ug/m3	5.4	2.7
Naphthalene	ND		ug/m3	5.4	2.7
C5-C8 Aliphatics, Adjusted	120		ug/m3	32	2.7
C9-C12 Aliphatics, Adjusted	490		ug/m3	38	2.7
C9-C10 Aromatics	ND		ug/m3	27	2.7

Project Name: UNIFIRST PROPERTY IA / VI **Lab Number:** L1005229

Project Number: 1-2114-2 **Report Date:** 04/29/10

SAMPLE RESULTS

Lab ID:	L1005229-41	D	Date Collected:	04/12/10 06:02
Client ID:	SV-11		Date Received:	04/12/10
Sample Location:	WOBURN, MA		Field Prep:	Not Specified
Matrix:	Soil_Vapor			
Analytical Method:	96,APH			
Analytical Date:	04/23/10 00:36			
Analyst:	RY			

Quality Control Information

Sample Type:	100 ml/min Composite
Sample Container Type:	Canister - 6 Liter
Sampling Flow Controller:	Mechanical
Sampling Zone:	Unknown
Sampling Flow Meter RPD of pre & post-sampling calibration check:	<=20%
Were all QA/QC procedures REQUIRED by the method followed?	Yes
Were all performance/acceptance standards for the required procedures achieved?	Yes
Were significant modifications made to the method as specified in Sect 11.1.2?	No

Parameter	Result	Qualifier	Units	RDL	Dilution Factor
Petroleum Hydrocarbons in Air - Mansfield Lab					
1,3-Butadiene	ND		ug/m3	20	10
Methyl tert butyl ether	ND		ug/m3	20	10
Benzene	ND		ug/m3	20	10
Toluene	ND		ug/m3	20	10
Ethylbenzene	ND		ug/m3	20	10
p/m-Xylene	ND		ug/m3	40	10
o-Xylene	ND		ug/m3	20	10
Naphthalene	ND		ug/m3	20	10
C5-C8 Aliphatics, Adjusted	ND		ug/m3	120	10
C9-C12 Aliphatics, Adjusted	ND		ug/m3	140	10
C9-C10 Aromatics	ND		ug/m3	100	10

Project Name: UNIFIRST PROPERTY IA / VI **Lab Number:** L1005229

Project Number: 1-2114-2 **Report Date:** 04/29/10

Method Blank Analysis
Batch Quality Control

Analytical Method: 96,APH
Analytical Date: 04/20/10 21:54
Analyst: AR

Parameter	Result	Qualifier	Units	RDL
Petroleum Hydrocarbons in Air - Mansfield Lab for sample(s): 01-11,13-21 Batch: WG409161-4				
1,3-Butadiene	ND		ug/m3	2.0
Methyl tert butyl ether	ND		ug/m3	2.0
Benzene	ND		ug/m3	2.0
Toluene	ND		ug/m3	2.0
Ethylbenzene	ND		ug/m3	2.0
p/m-Xylene	ND		ug/m3	4.0
o-Xylene	ND		ug/m3	2.0
Naphthalene	ND		ug/m3	2.0
C5-C8 Aliphatics, Adjusted	ND		ug/m3	12
C9-C12 Aliphatics, Adjusted	ND		ug/m3	14
C9-C10 Aromatics	ND		ug/m3	10

Project Name: UNIFIRST PROPERTY IA / VI **Lab Number:** L1005229

Project Number: 1-2114-2 **Report Date:** 04/29/10

Method Blank Analysis
Batch Quality Control

Analytical Method: 96,APH
Analytical Date: 04/21/10 19:55
Analyst: RY

Parameter	Result	Qualifier	Units	RDL
Petroleum Hydrocarbons in Air - Mansfield Lab for sample(s): 22-26,29,36-38,40 Batch: WG409173-4				
1,3-Butadiene	ND		ug/m3	2.0
Methyl tert butyl ether	ND		ug/m3	2.0
Benzene	ND		ug/m3	2.0
Toluene	ND		ug/m3	2.0
Ethylbenzene	ND		ug/m3	2.0
p/m-Xylene	ND		ug/m3	4.0
o-Xylene	ND		ug/m3	2.0
Naphthalene	ND		ug/m3	2.0
C5-C8 Aliphatics, Adjusted	ND		ug/m3	12
C9-C12 Aliphatics, Adjusted	ND		ug/m3	14
C9-C10 Aromatics	ND		ug/m3	10

Project Name: UNIFIRST PROPERTY IA / VI **Lab Number:** L1005229

Project Number: 1-2114-2 **Report Date:** 04/29/10

Method Blank Analysis
Batch Quality Control

Analytical Method: 96,APH
Analytical Date: 04/22/10 18:28
Analyst: RY

Parameter	Result	Qualifier	Units	RDL
Petroleum Hydrocarbons in Air - Mansfield Lab for sample(s): 12,27-28,30-35,39,41 Batch: WG409386-4				
1,3-Butadiene	ND		ug/m3	2.0
Methyl tert butyl ether	ND		ug/m3	2.0
Benzene	ND		ug/m3	2.0
Toluene	ND		ug/m3	2.0
Ethylbenzene	ND		ug/m3	2.0
p/m-Xylene	ND		ug/m3	4.0
o-Xylene	ND		ug/m3	2.0
Naphthalene	ND		ug/m3	2.0
C5-C8 Aliphatics, Adjusted	ND		ug/m3	12
C9-C12 Aliphatics, Adjusted	ND		ug/m3	14
C9-C10 Aromatics	ND		ug/m3	10

Lab Control Sample Analysis
Batch Quality Control

Project Name: UNIFIRST PROPERTY IA / VI
Project Number: 1-2114-2

Lab Number: L1005229
Report Date: 04/29/10

Parameter	LCS %Recovery	Qual	LCSD %Recovery	Qual	%Recovery Limits	RPD	Qual	RPD Limits
Petroleum Hydrocarbons in Air - Mansfield Lab Associated sample(s): 01-11,13-21 Batch: WG409161-3								
1,3-Butadiene	84		-		70-130	-		
Methyl tert butyl ether	95		-		70-130	-		
Benzene	92		-		70-130	-		
Toluene	97		-		70-130	-		
Ethylbenzene	103		-		70-130	-		
p/m-Xylene	103		-		70-130	-		
o-Xylene	104		-		70-130	-		
Naphthalene	143		-		50-150	-		
C5-C8 Aliphatics, Adjusted	89		-		70-130	-		
C9-C12 Aliphatics, Adjusted	122		-		70-130	-		
C9-C10 Aromatics	97		-		70-130	-		

Lab Control Sample Analysis
Batch Quality Control

Project Name: UNIFIRST PROPERTY IA / VI
Project Number: 1-2114-2

Lab Number: L1005229
Report Date: 04/29/10

Parameter	LCS %Recovery	Qual	LCSD %Recovery	Qual	%Recovery Limits	RPD	Qual	RPD Limits
Petroleum Hydrocarbons in Air - Mansfield Lab Associated sample(s): 22-26,29,36-38,40 Batch: WG409173-3								
1,3-Butadiene	94		-		70-130	-		
Methyl tert butyl ether	98		-		70-130	-		
Benzene	100		-		70-130	-		
Toluene	106		-		70-130	-		
Ethylbenzene	104		-		70-130	-		
p/m-Xylene	105		-		70-130	-		
o-Xylene	107		-		70-130	-		
Naphthalene	129		-		50-150	-		
C5-C8 Aliphatics, Adjusted	102		-		70-130	-		
C9-C12 Aliphatics, Adjusted	123		-		70-130	-		
C9-C10 Aromatics	96		-		70-130	-		

Lab Control Sample Analysis
Batch Quality Control

Project Name: UNIFIRST PROPERTY IA / VI
Project Number: 1-2114-2

Lab Number: L1005229
Report Date: 04/29/10

Parameter	LCS %Recovery	Qual	LCSD %Recovery	Qual	%Recovery Limits	RPD	Qual	RPD Limits
Petroleum Hydrocarbons in Air - Mansfield Lab Associated sample(s): 12,27-28,30-35,39,41 Batch: WG409386-3								
1,3-Butadiene	103		-		70-130	-		
Methyl tert butyl ether	91		-		70-130	-		
Benzene	104		-		70-130	-		
Toluene	108		-		70-130	-		
Ethylbenzene	96		-		70-130	-		
p/m-Xylene	97		-		70-130	-		
o-Xylene	99		-		70-130	-		
Naphthalene	131		-		50-150	-		
C5-C8 Aliphatics, Adjusted	108		-		70-130	-		
C9-C12 Aliphatics, Adjusted	121		-		70-130	-		
C9-C10 Aromatics	91		-		70-130	-		

Lab Duplicate Analysis
Batch Quality Control

Project Name: UNIFIRST PROPERTY IA / VI
Project Number: 1-2114-2

Lab Number: L1005229
Report Date: 04/29/10

Parameter	Native Sample	Duplicate Sample	Units	RPD	Qual	RPD Limits
Petroleum Hydrocarbons in Air - Mansfield Lab Associated sample(s): 01-11,13-21 QC Batch ID: WG409161-5 QC Sample: L1005229-16 Client ID: IA-06						
1,3-Butadiene	ND	ND	ug/m3	NC		30
Methyl tert butyl ether	ND	ND	ug/m3	NC		30
Benzene	ND	ND	ug/m3	NC		30
Toluene	10	11	ug/m3	10		30
Ethylbenzene	ND	ND	ug/m3	NC		30
p/m-Xylene	ND	ND	ug/m3	NC		30
o-Xylene	ND	ND	ug/m3	NC		30
Naphthalene	3.4	3.4	ug/m3	0		30
C5-C8 Aliphatics, Adjusted	51	48	ug/m3	6		30
C9-C12 Aliphatics, Adjusted	29	42	ug/m3	**37**	Q	30
C9-C10 Aromatics	ND	ND	ug/m3	NC		30

Lab Duplicate Analysis
Batch Quality Control

Project Name: UNIFIRST PROPERTY IA / VI
Project Number: 1-2114-2

Lab Number: L1005229
Report Date: 04/29/10

Parameter	Native Sample	Duplicate Sample	Units	RPD	RPD Limits
Petroleum Hydrocarbons in Air - Mansfield Lab Associated sample(s): 22-26,29,36-38,40 QC Batch ID: WG409173-5 QC Sample: L1005229-25 Client ID: SV-04					
1,3-Butadiene	ND	ND	ug/m3	NC	30
Methyl tert butyl ether	ND	ND	ug/m3	NC	30
Benzene	ND	ND	ug/m3	NC	30
Toluene	ND	ND	ug/m3	NC	30
Ethylbenzene	ND	ND	ug/m3	NC	30
p/m-Xylene	ND	ND	ug/m3	NC	30
o-Xylene	ND	ND	ug/m3	NC	30
Naphthalene	ND	ND	ug/m3	NC	30
C5-C8 Aliphatics, Adjusted	20	18	ug/m3	11	30
C9-C12 Aliphatics, Adjusted	300	290	ug/m3	3	30
C9-C10 Aromatics	ND	ND	ug/m3	NC	30

Lab Duplicate Analysis
Batch Quality Control

Project Name: UNIFIRST PROPERTY IA / VI
Project Number: 1-2114-2

Lab Number: L1005229
Report Date: 04/29/10

Parameter	Native Sample	Duplicate Sample	Units	RPD	RPD Limits
Petroleum Hydrocarbons in Air - Mansfield Lab Associated sample(s): 12,27-28,30-35,39,41 QC Batch ID: WG409386-5 QC Sample: L1005229-30 Client ID: SV-15					
1,3-Butadiene	ND	ND	ug/m3	NC	30
Methyl tert butyl ether	ND	ND	ug/m3	NC	30
Benzene	ND	ND	ug/m3	NC	30
Toluene	ND	ND	ug/m3	NC	30
Ethylbenzene	ND	ND	ug/m3	NC	30
p/m-Xylene	ND	ND	ug/m3	NC	30
o-Xylene	ND	ND	ug/m3	NC	30
Naphthalene	ND	ND	ug/m3	NC	30
C5-C8 Aliphatics, Adjusted	ND	ND	ug/m3	NC	30
C9-C12 Aliphatics, Adjusted	ND	ND	ug/m3	NC	30
C9-C10 Aromatics	ND	ND	ug/m3	NC	30

Project Name: UNIFIRST PROPERTY IA / VI **Lab Number:** L1005229

Project Number: 1-2114-2 **Report Date:** 04/29/10

Canister and Flow Controller Information

Samplenum	Client ID	Media ID	Media Type	Cleaning Batch ID	Initial Pressure (in. Hg)	Pressure on Receipt (in. Hg)	Flow Out mL/min	Flow In mL/min	% RSD
L1005229-01	IA-12	0298	#20 AMB	L1004721	-	-	10.0	10.8	8
L1005229-01	IA-12	785	6.0L Can	I1004721	-29.3	-4.3	-	-	-
L1005229-02	IA-04	0074	#20 AMB	L1004721	-	-	10.0	11.4	13
L1005229-02	IA-04	1559	6.0L Can	I1004721	-29.3	-2.1	-	-	-
L1005229-03	IA-14	0256	#20 AMB	L1004721	-	-	10.0	10.9	9
L1005229-03	IA-14	945	6.0L Can	I1004721	-29.3	-4.4	-	-	-
L1005229-04	OA-03	0233	#20 AMB	L1004721	-	-	10.0	10.5	5
L1005229-04	OA-03	762	6.0L Can	I1004721	-29.3	-5.1	-	-	-
L1005229-05	IA-10A	0356	#20 AMB	L1004721	-	-	10.0	10.9	9
L1005229-05	IA-10A	1707	6.0L Can	I1004721	-29.3	-3.8	-	-	-
L1005229-06	IA-11	0349	#20 AMB	L1004721	-	-	10.0	11.0	10
L1005229-06	IA-11	983	6.0L Can	I1004721	-29.3	-3.1	-	-	-
L1005229-07	IA-DUP02	0047	#20 AMB	L1004721	-	-	10.0	10.8	8
L1005229-07	IA-DUP02	618	6.0L Can	I1004721	-29.3	-3.2	-	-	-
L1005229-08	IA-09	0379	#20 AMB	L1004721	-	-	10.0	11.9	17
L1005229-08	IA-09	1667	6.0L Can	I1004721	-29.3	-4.2	-	-	-
L1005229-09	IA-08	0081	#20 AMB	L1004721	-	-	10.0	11.4	13

Project Name: UNIFIRST PROPERTY IA / VI **Lab Number:** L1005229

Project Number: 1-2114-2 **Report Date:** 04/29/10

Canister and Flow Controller Information

Samplenum	Client ID	Media ID	Media Type	Cleaning Batch ID	Initial Pressure (in. Hg)	Pressure on Receipt (in. Hg)	Flow Out mL/min	Flow In mL/min	% RSD
L1005229-09	IA-08	584	6.0L Can	I1004721	-29.3	-5.0	-	-	-
L1005229-10	IA-05	0333	#20 AMB	L1004721	-	-	10.0	10.5	5
L1005229-10	IA-05	1036	6.0L Can	I1004721	-29.3	-5.6	-	-	-
L1005229-11	OA-01	0175	#20 AMB	L1004721	-	-	10.0	10.7	7
L1005229-11	OA-01	782	6.0L Can	I1004721	-29.3	-5.1	-	-	-
L1005229-12	SV-07	0360	#90 SV	L1004721	-	-	100	110	10
L1005229-12	SV-07	1628	6.0L Can	I1004721	-29.5	-2.7	-	-	-
L1005229-13	IA-13	0277	#20 AMB	L1004721	-	-	10.0	10.6	6
L1005229-13	IA-13	972	6.0L Can	I1004721	-29.3	-5.2	-	-	-
L1005229-14	OA-02	0028	#20 AMB	L1004721	-	-	10.0	10.5	5
L1005229-14	OA-02	1690	6.0L Can	I1004721	-29.3	-4.7	-	-	-
L1005229-15	IA-DUP01	0309	#20 AMB	L1004721	-	-	10.0	10.8	8
L1005229-15	IA-DUP01	1614	6.0L Can	I1004721	-29.3	-4.1	-	-	-
L1005229-16	IA-06	0231	#20 AMB	L1004721	-	-	10.0	10.6	6
L1005229-16	IA-06	639	6.0L Can	I1004721	-29.3	-4.8	-	-	-
L1005229-17	OA-DUP1	0262	#20 AMB	L1004721	-	-	10.0	10.3	3
L1005229-17	OA-DUP1	1566	6.0L Can	I1004721	-29.3	-5.0	-	-	-

Project Name: UNIFIRST PROPERTY IA / VI **Lab Number:** L1005229

Project Number: 1-2114-2 **Report Date:** 04/29/10

Canister and Flow Controller Information

Samplenum	Client ID	Media ID	Media Type	Cleaning Batch ID	Initial Pressure (in. Hg)	Pressure on Receipt (in. Hg)	Flow Out mL/min	Flow In mL/min	% RSD
L1005229-18	IA-15	0002	#20 AMB	L1004721	-	-	10.0	10.3	3
L1005229-18	IA-15	1626	6.0L Can	I1004721	-29.3	-3.9	-	-	-
L1005229-19	IA-01	0290	#20 AMB	L1004721	-	-	10.0	24.4	84
L1005229-19	IA-01	695	6.0L Can	I1004721	-29.3	0.5	-	-	-
L1005229-20	IA-13A	0183	#20 AMB	L1004721	-	-	10.0	10.5	5
L1005229-20	IA-13A	609	6.0L Can	I1004721	-29.3	-4.8	-	-	-
L1005229-21	IA-10	0205	#20 AMB	L1004721	-	-	10.0	10.5	5
L1005229-21	IA-10	1676	6.0L Can	I1004721	-29.3	-3.8	-	-	-
L1005229-22	IA-03	0406	#20 AMB	L1004721	-	-	10.0	10.4	4
L1005229-22	IA-03	986	6.0L Can	I1004721	-29.3	-3.2	-	-	-
L1005229-23	IA-07	0369	#20 AMB	L1004721	-	-	10.0	11.0	10
L1005229-23	IA-07	1704	6.0L Can	I1004721	-29.3	-5.4	-	-	-
L1005229-24	IA-02	0242	#20 AMB	L1004721	-	-	10.0	10.0	0
L1005229-24	IA-02	949	6.0L Can	L1004721	-29.3	-4.2	-	-	-
L1005229-25	SV-04	0466	#90 SV	I1004705	-	-	100	105	5
L1005229-25	SV-04	652	6.0L Can	L1004705	-29.2	-2.4	-	-	-
L1005229-26	SV-14	0045	#90 SV	I1004705	-	-	100	105	5

Project Name: UNIFIRST PROPERTY IA / VI **Lab Number:** L1005229

Project Number: 1-2114-2 **Report Date:** 04/29/10

Canister and Flow Controller Information

Samplenum	Client ID	Media ID	Media Type	Cleaning Batch ID	Initial Pressure (in. Hg)	Pressure on Receipt (in. Hg)	Flow Out mL/min	Flow In mL/min	% RSD
L1005229-26	SV-14	998	6.0L Can	I1004705	-29.2	-3.9	-	-	-
L1005229-27	SV-DUP01	0291	#90 SV	I1004705	-	-	100	100	0
L1005229-27	SV-DUP01	1706	6.0L Can	I1004705	-29.2	-4.3	-	-	-
L1005229-28	SV-13	0368	#90 SV	I1004705	-	-	100	104	4
L1005229-28	SV-13	1692	6.0L Can	I1004705	-29.2	-7.2	-	-	-
L1005229-29	SV-03	0367	#90 SV	L1004705	-	-	100	108	8
L1005229-29	SV-03	965	6.0L Can	I1004705	-29.2	-4.2	-	-	-
L1005229-30	SV-15	0465	#90 SV	I1004705	-	-	100	104	4
L1005229-30	SV-15	587	6.0L Can	I1004705	-29.3	-5.6	-	-	-
L1005229-31	SV-12	0019	#90 SV	I1004705	-	-	100	104	4
L1005229-31	SV-12	956	6.0L Can	L1004721	-29.2	-5.6	-	-	-
L1005229-32	SV-05	0463	#90 SV	L1004705	-	-	100	104	4
L1005229-32	SV-05	1520	6.0L Can	I1004705	-29.2	-2.5	-	-	-
L1005229-33	SV-10	0257	#90 SV	I1004705	-	-	100	100	0
L1005229-33	SV-10	764	6.0L Can	I1004705	-29.2	-1.3	-	-	-
L1005229-34	SV-DUP02	0208	#90 SV	I1004705	-	-	100	104	4
L1005229-34	SV-DUP02	1633	6.0L Can	I1004705	-29.2	-17.1	-	-	-

Project Name: UNIFIRST PROPERTY IA / VI **Lab Number:** L1005229

Project Number: 1-2114-2 **Report Date:** 04/29/10

Canister and Flow Controller Information

Samplenum	Client ID	Media ID	Media Type	Cleaning Batch ID	Initial Pressure (in. Hg)	Pressure on Receipt (in. Hg)	Flow Out mL/min	Flow In mL/min	% RSD
L1005229-35	SV-09	0275	#90 SV	I1004705	-	-	100	100	0
L1005229-35	SV-09	1655	6.0L Can	I1004705	-29.3	-4.1	-	-	-
L1005229-36	SV-01	0303	#90 SV	I1004705	-	-	100	100	0
L1005229-36	SV-01	696	6.0L Can	I1004705	-29.2	-3.5	-	-	-
L1005229-37	SV-08	0343	#90 SV	I1004705	-	-	100	105	5
L1005229-37	SV-08	1576	6.0L Can	I1004705	-29.3	-6.6	-	-	-
L1005229-38	TRIP BLANK	0332	#90 SV	I1004705	-	-	100	103	3
L1005229-38	TRIP BLANK	932	6.0L Can	I1004705	-29.2	-30.0	-	-	-
L1005229-39	SV-06	0090	#90 SV	I1004705	-	-	100	100	0
L1005229-39	SV-06	1646	6.0L Can	I1004705	-29.3	-4.6	-	-	-
L1005229-40	SV-02	0451	#90 SV	L1004705	-	-	100	105	5
L1005229-40	SV-02	963	6.0L Can	L1004705	-29.2	-21.1	-	-	-
L1005229-41	SV-11	0390	#90 SV	I1004705	-	-	100	104	4
L1005229-41	SV-11	1556	6.0L Can	I1004705	-29.3	-3.1	-	-	-
L1005229-42	CAN 1053 FC 269	0269	#90 SV	I1004705	-	-	100	104	4
L1005229-43	CAN 969 FC 158	0158	#90 SV	I1004705	-	-	100	96	4
L1005229-44	CAN 1562 FC 166	0166	#90 SV	I1004705	-	-	100	105	5

Project Name: UNIFIRST PROPERTY IA / VI
Project Number: 1-2114-2

Lab Number: L1005229
Report Date: 04/29/10

Sample Receipt and Container Information

Were project specific reporting limits specified? YES

Reagent H2O Preserved Vials Frozen on: NA

Cooler Information

Cooler	Custody Seal
N/A	Present/Intact

Container Information

Container ID	Container Type	Cooler	pH	Temp deg C	Pres	Seal	Analysis
L1005229-01A	Canister - 6 Liter	N/A	NA		NA	Present/Intact	APH-10(30),TO15-SIM(30)
L1005229-02A	Canister - 6 Liter	N/A	NA		NA	Present/Intact	APH-10(30),TO15-SIM(30)
L1005229-03A	Canister - 6 Liter	N/A	NA		NA	Present/Intact	APH-10(30),TO15-SIM(30)
L1005229-04A	Canister - 6 Liter	N/A	NA		NA	Present/Intact	APH-10(30),TO15-SIM(30)
L1005229-05A	Canister - 6 Liter	N/A	NA		NA	Present/Intact	APH-10(30),TO15-SIM(30)
L1005229-06A	Canister - 6 Liter	N/A	NA		NA	Present/Intact	APH-10(30),TO15-SIM(30)
L1005229-07A	Canister - 6 Liter	N/A	NA		NA	Present/Intact	APH-10(30),TO15-SIM(30)
L1005229-08A	Canister - 6 Liter	N/A	NA		NA	Present/Intact	APH-10(30),TO15-SIM(30)
L1005229-09A	Canister - 6 Liter	N/A	NA		NA	Present/Intact	APH-10(30),TO15-SIM(30)
L1005229-10A	Canister - 6 Liter	N/A	NA		NA	Present/Intact	APH-10(30),TO15-SIM(30)
L1005229-11A	Canister - 6 Liter	N/A	NA		NA	Present/Intact	APH-10(30),TO15-SIM(30)
L1005229-12A	Canister - 6 Liter	N/A	NA		NA	Present/Intact	APH-10(30),TO15-SIM(30)
L1005229-13A	Canister - 6 Liter	N/A	NA		NA	Present/Intact	APH-10(30),TO15-SIM(30)
L1005229-14A	Canister - 6 Liter	N/A	NA		NA	Present/Intact	APH-10(30),TO15-SIM(30)
L1005229-15A	Canister - 6 Liter	N/A	NA		NA	Present/Intact	APH-10(30),TO15-SIM(30)
L1005229-16A	Canister - 6 Liter	N/A	NA		NA	Present/Intact	APH-10(30),TO15-SIM(30)
L1005229-17A	Canister - 6 Liter	N/A	NA		NA	Present/Intact	APH-10(30),TO15-SIM(30)
L1005229-18A	Canister - 6 Liter	N/A	NA		NA	Present/Intact	APH-10(30),TO15-SIM(30)
L1005229-19A	Canister - 6 Liter	N/A	NA		NA	Present/Intact	APH-10(30),TO15-SIM(30)
L1005229-20A	Canister - 6 Liter	N/A	NA		NA	Present/Intact	APH-10(30),TO15-SIM(30)
L1005229-21A	Canister - 6 Liter	N/A	NA		NA	Present/Intact	APH-10(30),TO15-SIM(30)
L1005229-22A	Canister - 6 Liter	N/A	NA		NA	Present/Intact	APH-10(30),TO15-SIM(30)
L1005229-23A	Canister - 6 Liter	N/A	NA		NA	Present/Intact	APH-10(30),TO15-SIM(30)
L1005229-24A	Canister - 6 Liter	N/A	NA		NA	Present/Intact	APH-10(30),TO15-SIM(30)
L1005229-25A	Canister - 6 Liter	N/A	NA		NA	Present/Intact	APH-10(30),TO15-SIM(30)
L1005229-26A	Canister - 6 Liter	N/A	NA		NA	Present/Intact	APH-10(30),TO15-SIM(30)
L1005229-27A	Canister - 6 Liter	N/A	NA		NA	Present/Intact	APH-10(30),TO15-SIM(30)

*Hold days indicated by values in parentheses

Project Name: UNIFIRST PROPERTY IA / VI
Project Number: 1-2114-2

Lab Number: L1005229
Report Date: 04/29/10

Container Information

Container ID	Container Type	Cooler	pH	Temp deg C	Pres	Seal	Analysis
L1005229-28A	Canister - 6 Liter	N/A	NA		NA	Present/Intact	APH-10(30),TO15-SIM(30)
L1005229-29A	Canister - 6 Liter	N/A	NA		NA	Present/Intact	APH-10(30),TO15-SIM(30)
L1005229-30A	Canister - 6 Liter	N/A	NA		NA	Present/Intact	APH-10(30),TO15-SIM(30)
L1005229-31A	Canister - 6 Liter	N/A	NA		NA	Present/Intact	APH-10(30),TO15-SIM(30)
L1005229-32A	Canister - 6 Liter	N/A	NA		NA	Present/Intact	APH-10(30),TO15-SIM(30)
L1005229-33A	Canister - 6 Liter	N/A	NA		NA	Present/Intact	APH-10(30),TO15-SIM(30)
L1005229-34A	Canister - 6 Liter	N/A	NA		NA	Present/Intact	APH-10(30),TO15-SIM(30)
L1005229-35A	Canister - 6 Liter	N/A	NA		NA	Present/Intact	APH-10(30),TO15-SIM(30)
L1005229-36A	Canister - 6 Liter	N/A	NA		NA	Present/Intact	APH-10(30),TO15-SIM(30)
L1005229-37A	Canister - 6 Liter	N/A	NA		NA	Present/Intact	APH-10(30),TO15-SIM(30)
L1005229-38A	Canister - 6 Liter	N/A	NA		NA	Present/Intact	APH-10(30),TO15-SIM(30)
L1005229-39A	Canister - 6 Liter	N/A	NA		NA	Present/Intact	APH-10(30),TO15-SIM(30)
L1005229-40A	Canister - 6 Liter	N/A	NA		NA	Present/Intact	APH-10(30),TO15-SIM(30)
L1005229-41A	Canister - 6 Liter	N/A	NA		NA	Present/Intact	APH-10(30),TO15-SIM(30)
L1005229-42A	Canister - 6 Liter	N/A	NA		NA	Present/Intact	CAN-RENT()
L1005229-43A	Canister - 6 Liter	N/A	NA		NA	Present/Intact	CAN-RENT()
L1005229-44A	Canister - 6 Liter	N/A	NA		NA	Present/Intact	CAN-RENT()

*Hold days indicated by values in parentheses

Project Name:	UNIFIRST PROPERTY IA / VI	**Lab Number:**	L1005229
Project Number:	1-2114-2	**Report Date:**	04/29/10

GLOSSARY

Acronyms

EPA	· Environmental Protection Agency.
LCS	· Laboratory Control Sample: A sample matrix, free from the analytes of interest, spiked with verified known amounts of analytes or a material containing known and verified amounts of analytes.
LCSD	· Laboratory Control Sample Duplicate: Refer to LCS.
MS	· Matrix Spike Sample: A sample prepared by adding a known mass of target analyte to a specified amount of matrix sample for which an independent estimate of target analyte concentration is available.
MSD	· Matrix Spike Sample Duplicate: Refer to MS.
NA	· Not Applicable.
NC	· Not Calculated: Term is utilized when one or more of the results utilized in the calculation are non-detect at the parameter's reporting unit.
NI	· Not Ignitable.
RDL	· Reported Detection Limit: The value at which an instrument can accurately measure an analyte at a specific concentration. The RDL includes any adjustments from dilutions, concentrations or moisture content, where applicable.
RPD	· Relative Percent Difference: The results from matrix and/or matrix spike duplicates are primarily designed to assess the precision of analytical results in a given matrix and are expressed as relative percent difference (RPD). Values which are less than five times the reporting limit for any individual parameter are evaluated by utilizing the absolute difference between the values; although the RPD value will be provided in the report.

Terms

Analytical Method: Both the document from which the method originates and the analytical reference method. (Example: EPA 8260B is shown as 1,8260B.) The codes for the reference method documents are provided in the References section of the Addendum.

Data Qualifiers

A	· Spectra identified as "Aldol Condensation Product".
B	· The analyte was detected above the reporting limit in the associated method blank. Flag only applies to associated field samples that have detectable concentrations of the analyte at less than five times (5x) the concentration found in the blank. For MCP-related projects, flag only applies to associated field samples that have detectable concentrations of the analyte at less than ten times (10x) the concentration found in the blank. For DOD-related projects, flag only applies to associated field samples that have detectable concentrations of the analyte at less than ten times (10x) the concentration found in the blank AND the analyte was detected above one-half the reporting limit (or above the reporting limit for common lab contaminants) in the associated method blank.
D	· Concentration of analyte was quantified from diluted analysis. Flag only applies to field samples that have detectable concentrations of the analyte.
E	· Concentration of analyte exceeds the range of the calibration curve and/or linear range of the instrument.
H	· The analysis of pH was performed beyond the regulatory-required holding time of 15 minutes from the time of sample collection.
P	· The RPD between the results for the two columns exceeds the method-specified criteria.
Q	· The quality control sample exceeds the associated acceptance criteria. Note: This flag is not applicable for matrix spike recoveries when the sample concentration is greater than 4x the spike added or for batch duplicate RPD when the sample concentrations are less than 5x the RDL. (Metals only.)
R	· Analytical results are from sample re-analysis.
RE	· Analytical results are from sample re-extraction.
J	· Estimated value. This represents an estimated concentration for Tentatively Identified Compounds (TICs).
ND	· Not detected at the reported detection limit (RDL) for the sample.

Report Format: Data Usability Report

Project Name:	UNIFIRST PROPERTY IA / VI	**Lab Number:**	L1005229
Project Number:	1-2114-2	**Report Date:**	04/29/10

REFERENCES

48 Compendium of Methods for the Determination of Toxic Organic Compounds in Ambient Air. Second Edition. EPA/625/R-96/010b, January 1999.

96 Method for the Determination of Air-Phase Petroleum Hydrocarbons (APH), MassDEP, December 2009, Revision 1 with QC Requirements & Performance Standards for the Analysis of APH by GC/MS under the Massachusetts Contingency Plan, WSC-CAM-IXA, July 2010.

LIMITATION OF LIABILITIES

Alpha Analytical performs services with reasonable care and diligence normal to the analytical testing laboratory industry. In the event of an error, the sole and exclusive responsibility of Alpha Woods Hole Labs shall be to re-perform the work at it's own expense. In no event shall Alpha Analytical be held liable for any incidental, consequential or special damages, including but not limited to, damages in any way connected with the use of, interpretation of, information or analysis provided by Alpha Woods Hole Labs.

We strongly urge our clients to comply with EPA protocol regarding sample volume, preservation, cooling, containers, sampling procedures, holding time and splitting of samples in the field.

ANALYTICAL REPORT

Lab Number:	L1004721
Client:	The Johnson Company, Inc 100 State Street Suite 600 Montpelier, VT 05602
ATTN:	Bettina Longino
Project Name:	UNIFIRST PROPERTY IA / VI
Project Number:	1-2114-2
Report Date:	04/10/10

Certifications & Approvals: MA (M-MA030), NY (11627), CT (PH-0141), NH (2206), NJ (MA015), RI (LAO00299), ME (MA0030), PA (Registration #68-02089), LA NELAC (03090), FL NELAC (E87814), US Army Corps of Engineers.

320 Forbes Boulevard, Mansfield, MA 02048-1806
508-822-9300 (Fax) 508-822-3288 800-624-9220 - www.alphalab.com

Project Name: UNIFIRST PROPERTY IA / VI
Project Number: 1-2114-2

Lab Number: L1004721
Report Date: 04/10/10

Alpha Sample ID	Client ID	Sample Location	Collection Date/Time
L1004721-01	CAN 785 FC 298	WOBURN, MA	04/02/10 00:00
L1004721-03	CAN 1559 FC 074	WOBURN, MA	04/02/10 00:00
L1004721-04	CAN 945 FC 256	WOBURN, MA	04/02/10 00:00
L1004721-05	CAN 762 FC 233	WOBURN, MA	04/02/10 00:00
L1004721-06	CAN 1707 FC 356	WOBURN, MA	04/02/10 00:00
L1004721-07	CAN 983 FC 349	WOBURN, MA	04/02/10 00:00
L1004721-08	CAN 618 FC 047	WOBURN, MA	04/02/10 00:00
L1004721-09	CAN 1667 FC 379	WOBURN, MA	04/02/10 00:00
L1004721-10	CAN 584 FC 081	WOBURN, MA	04/02/10 00:00
L1004721-11	CAN 1036 FC 333	WOBURN, MA	04/02/10 00:00
L1004721-12	CAN 782 FC 175	WOBURN, MA	04/02/10 00:00
L1004721-13	CAN 1628 FC 360	WOBURN, MA	04/02/10 00:00
L1004721-14	CAN 972 FC 277	WOBURN, MA	04/02/10 00:00
L1004721-15	CAN 1690 FC 028	WOBURN, MA	04/02/10 00:00
L1004721-16	CAN 1614 FC 309	WOBURN, MA	04/02/10 00:00
L1004721-17	CAN 639 FC 231	WOBURN, MA	04/02/10 00:00
L1004721-18	CAN 1566 FC 262	WOBURN, MA	04/02/10 00:00
L1004721-19	CAN 1626 FC 002	WOBURN, MA	04/02/10 00:00
L1004721-20	CAN 695 FC 290	WOBURN, MA	04/02/10 00:00
L1004721-21	CAN 609 FC 183	WOBURN, MA	04/02/10 00:00
L1004721-22	CAN 1676 FC 205	WOBURN, MA	04/02/10 00:00
L1004721-23	CAN 986 FC 406	WOBURN, MA	04/02/10 00:00
L1004721-24	CAN 1704 FC 369	WOBURN, MA	04/02/10 00:00
L1004721-25	CAN 949 FC 242	WOBURN, MA	04/02/10 00:00

Project Name: UNIFIRST PROPERTY IA / VI **Lab Number:** L1004721

Project Number: 1-2114-2 **Report Date:** 04/10/10

MADEP MCP Response Action Analytical Report Certification

This form provides certifications for all samples performed by MCP methods. Please refer to the Sample Results and Container Information sections of this report for specification of MCP methods used for each analysis. The following questions pertain only to MCP Analytical Methods.

An affirmative response to questions A, B, C & D is required for "Presumptive Certainty" status		
A	Were all samples received by the laboratory in a condition consistent with those described on their Chain-of-Custody documentation for the data set?	YES
B	Were all QA/QC procedures required for the specified analytical methods(s) included in this report followed, including the requirement to note and discuss in a narrative QC data that did not meet appropriate performance standards or guidelines?	YES
C	Does the analytical data included in this report meet all the requirements for "Presumptive Certainty", as described in section 2.0 of the MADEP document CAM VII A, "Quality Assurance and Quality Control Guidelines for the Acquisition and Reporting of Analytical Data"?	YES
D	VPH and EPH methods only: Was the VPH or EPH method run without significant modifications, as specified in Section 11.3?	N/A

A response to questions E and F is required for "Presumptive Certainty" status		
E	Were all QC performance standards and recommendations for the specified method(s) achieved?	YES
F	Were results for all analyte-list compounds/elements for the specified method(s) reported?	YES

For any questions answered "No", please refer to the case narrative section on the following page(s).

Please note that sample matrix information is located in the Sample Results section of this report.

Project Name: UNIFIRST PROPERTY IA / VI **Lab Number:** L1004721
Project Number: 1-2114-2 **Report Date:** 04/10/10

Case Narrative

The samples were received in accordance with the Chain of Custody and no significant deviations were encountered during the preparation or analysis unless otherwise noted. Sample Receipt, Container Information, and the Chain of Custody are located at the back of the report.

Results contained within this report relate only to the samples submitted under this Alpha Lab Number and meet all of the requirements of NELAC, for all NELAC accredited parameters. The data presented in this report is organized by parameter (i.e. VOC, SVOC, etc.). Sample specific Quality Control data (i.e. Surrogate Spike Recovery) is reported at the end of the target analyte list for each individual sample, followed by the Laboratory Batch Quality Control at the end of each parameter. If a sample was re-analyzed or re-extracted due to a required quality control corrective action and if both sets of data are reported, the Laboratory ID of the re-analysis or re-extraction is designated with an "R" or "RE", respectively. When multiple Batch Quality Control elements are reported (e.g. more than one LCS), the associated samples for each element are noted in the grey shaded header line of each data table. Any Laboratory Batch, Sample Specific % recovery or RPD value that is outside the listed Acceptance Criteria is bolded in the report. Definitions of all data qualifiers and acronyms used in this report are provided in the Glossary located at the back of the report.

Please see the associated ADEx data file for a comparison of laboratory reporting limits that were achieved with the regulatory Numerical Standards requested on the Chain of Custody.

For additional information, please contact Client Services at 800-624-9220.

Individual Canister and Flow Controller Certification.

Volatile Organics in Air (SIM)
1,2-Dibromoethane and Naphthalene were evaluated to 1/2 the RL and are 'J' qualified if the concentration is below the quantitation limit (RDL), but greater than or equal to 1/2 the RDL. Values are estimated.

MCP Related Narratives
Petroleum Hydrocarbons in Air
The internal standards were within method criteria.
The WG407080-3 LCS recoveries for Ethyl benzene (132%) and o-Xylene (131%) are above the 70%-130% acceptance limit. The associated samples did not have reportable concentrations of Ethyl benzene or o-Xylene, therefore the results were released without qualification per the method.

Project Name:	UNIFIRST PROPERTY IA / VI	**Lab Number:**	L1004721
Project Number:	1-2114-2	**Report Date:**	04/10/10

Case Narrative (continued)

I, the undersigned, attest under the pains and penalties of perjury that, to the best of my knowledge and belief and based upon my personal inquiry of those responsible for providing the information contained in this analytical report, such information is accurate and complete. This certificate of analysis is not complete unless this page accompanies any and all pages of this report.

Authorized Signature: Kathleen M. O'Brien

Title: Technical Director/Representative Date: 04/10/10

AIR

Project Name: UNIFIRST PROPERTY IA / VI

Project Number: 1-2114-2

Lab Number: L1004721

Report Date: 04/10/10

SAMPLE RESULTS

Lab ID: L1004721-01
Client ID: CAN 785 FC 298
Sample Location: WOBURN, MA
Matrix: Air
Anaytical Method: 48,TO-15-SIM
Analytical Date: 04/06/10 08:08
Analyst: AJ

Date Collected: 04/02/10 00:00
Date Received: 04/03/10
Field Prep: Not Specified

Parameter	ppbV Results	ppbV RDL	ug/m3 Results	ug/m3 RDL	Qualifier	Dilution Factor
Volatile Organics in Air by SIM - Mansfield Lab						
1,1,1-Trichloroethane	ND	0.020	ND	0.109		1
1,1,2-Trichloroethane	ND	0.020	ND	0.109		1
1,1-Dichloroethane	ND	0.020	ND	0.081		1
1,1-Dichloroethene	ND	0.020	ND	0.079		1
1,2,4-Trimethylbenzene	ND	0.020	ND	0.098		1
1,2-Dibromoethane	ND	0.020	ND	0.154		1
1,2-Dichlorobenzene	ND	0.020	ND	0.120		1
1,2-Dichloroethane	ND	0.020	ND	0.081		1
1,3-Butadiene	ND	0.020	ND	0.044		1
1,3-Dichlorobenzene	ND	0.020	ND	0.120		1
1,4-Dichlorobenzene	ND	0.020	ND	0.120		1
Benzene	ND	0.070	ND	0.223		1
Bromodichloromethane	ND	0.020	ND	0.134		1
Bromoform	ND	0.020	ND	0.206		1
Carbon tetrachloride	ND	0.020	ND	0.126		1
Chlorobenzene	ND	0.020	ND	0.092		1
Chloroform	ND	0.020	ND	0.098		1
cis-1,2-Dichloroethene	ND	0.020	ND	0.079		1
Ethylbenzene	ND	0.020	ND	0.087		1
Methylene chloride	ND	0.500	ND	1.74		1
Methyl tert butyl ether	ND	0.020	ND	0.072		1
Naphthalene	ND	0.050	ND	0.262		1
Xylenes, Total	ND	0.060	ND	0.260		1
Tetrachloroethene	ND	0.020	ND	0.136		1
Toluene	ND	0.050	ND	0.188		1

Project Name: UNIFIRST PROPERTY IA / VI

Project Number: 1-2114-2

Lab Number: L1004721

Report Date: 04/10/10

SAMPLE RESULTS

Lab ID: L1004721-01
Client ID: CAN 785 FC 298
Sample Location: WOBURN, MA

Date Collected: 04/02/10 00:00
Date Received: 04/03/10
Field Prep: Not Specified

Parameter	ppbV Results	ppbV RDL	ug/m3 Results	ug/m3 RDL	Qualifier	Dilution Factor
Volatile Organics in Air by SIM - Mansfield Lab						
trans-1,2-Dichloroethene	ND	0.020	ND	0.079		1
trans-1,3-Dichloropropene	ND	0.020	ND	0.091		1
Trichloroethene	ND	0.020	ND	0.107		1
Vinyl chloride	ND	0.020	ND	0.051		1
Isopropylbenzene	ND	0.500	ND	2.46		1

Project Name: UNIFIRST PROPERTY IA / VI
Project Number: 1-2114-2

Lab Number: L1004721
Report Date: 04/10/10

SAMPLE RESULTS

Lab ID: L1004721-03
Client ID: CAN 1559 FC 074
Sample Location: WOBURN, MA
Matrix: Air
Anaytical Method: 48,TO-15-SIM
Analytical Date: 04/05/10 21:34
Analyst: AJ

Date Collected: 04/02/10 00:00
Date Received: 04/03/10
Field Prep: Not Specified

Parameter	ppbV Results	ppbV RDL	ug/m3 Results	ug/m3 RDL	Qualifier	Dilution Factor
Volatile Organics in Air by SIM - Mansfield Lab						
1,1,1-Trichloroethane	ND	0.020	ND	0.109		1
1,1,2-Trichloroethane	ND	0.020	ND	0.109		1
1,1-Dichloroethane	ND	0.020	ND	0.081		1
1,1-Dichloroethene	ND	0.020	ND	0.079		1
1,2,4-Trimethylbenzene	ND	0.020	ND	0.098		1
1,2-Dibromoethane	ND	0.020	ND	0.154		1
1,2-Dichloroethane	ND	0.020	ND	0.081		1
1,2-Dichloropropane	ND	0.020	ND	0.092		1
1,3-Butadiene	ND	0.020	ND	0.044		1
1,3-Dichlorobenzene	ND	0.020	ND	0.120		1
1,4-Dichlorobenzene	ND	0.020	ND	0.120		1
Benzene	ND	0.070	ND	0.223		1
Bromodichloromethane	ND	0.020	ND	0.134		1
Bromoform	ND	0.020	ND	0.206		1
Carbon tetrachloride	ND	0.020	ND	0.126		1
Chlorobenzene	ND	0.020	ND	0.092		1
Chloroform	ND	0.020	ND	0.098		1
cis-1,2-Dichloroethene	ND	0.020	ND	0.079		1
Ethylbenzene	ND	0.020	ND	0.087		1
Methylene chloride	ND	0.500	ND	1.74		1
Methyl tert butyl ether	ND	0.020	ND	0.072		1
Naphthalene	ND	0.050	ND	0.262		1
Xylenes, Total	ND	0.060	ND	0.260		1
Tetrachloroethene	ND	0.020	ND	0.136		1
Toluene	ND	0.050	ND	0.188		1

Project Name: UNIFIRST PROPERTY IA / VI

Project Number: 1-2114-2

Lab Number: L1004721

Report Date: 04/10/10

SAMPLE RESULTS

Lab ID: L1004721-03
Client ID: CAN 1559 FC 074
Sample Location: WOBURN, MA

Date Collected: 04/02/10 00:00
Date Received: 04/03/10
Field Prep: Not Specified

Parameter	ppbV Results	ppbV RDL	ug/m3 Results	ug/m3 RDL	Qualifier	Dilution Factor
Volatile Organics in Air by SIM - Mansfield Lab						
trans-1,2-Dichloroethene	ND	0.020	ND	0.079		1
trans-1,3-Dichloropropene	ND	0.020	ND	0.091		1
Trichloroethene	ND	0.020	ND	0.107		1
Vinyl chloride	ND	0.020	ND	0.051		1
Isopropylbenzene	ND	0.500	ND	2.46		1

Project Name: UNIFIRST PROPERTY IA / VI
Project Number: 1-2114-2

Lab Number: L1004721
Report Date: 04/10/10

SAMPLE RESULTS

Lab ID: L1004721-04
Client ID: CAN 945 FC 256
Sample Location: WOBURN, MA
Matrix: Air
Anaytical Method: 48,TO-15-SIM
Analytical Date: 04/05/10 22:10
Analyst: AJ

Date Collected: 04/02/10 00:00
Date Received: 04/03/10
Field Prep: Not Specified

Parameter	ppbV Results	ppbV RDL	ug/m3 Results	ug/m3 RDL	Qualifier	Dilution Factor
Volatile Organics in Air by SIM - Mansfield Lab						
1,1,1-Trichloroethane	ND	0.020	ND	0.109		1
1,1,2-Trichloroethane	ND	0.020	ND	0.109		1
1,1-Dichloroethane	ND	0.020	ND	0.081		1
1,1-Dichloroethene	ND	0.020	ND	0.079		1
1,2,4-Trimethylbenzene	ND	0.020	ND	0.098		1
1,2-Dibromoethane	ND	0.020	ND	0.154		1
1,2-Dichloroethane	ND	0.020	ND	0.081		1
1,2-Dichloropropane	ND	0.020	ND	0.092		1
1,3-Butadiene	ND	0.020	ND	0.044		1
1,3-Dichlorobenzene	ND	0.020	ND	0.120		1
1,4-Dichlorobenzene	ND	0.020	ND	0.120		1
Benzene	ND	0.070	ND	0.223		1
Bromodichloromethane	ND	0.020	ND	0.134		1
Bromoform	ND	0.020	ND	0.206		1
Carbon tetrachloride	ND	0.020	ND	0.126		1
Chlorobenzene	ND	0.020	ND	0.092		1
Chloroform	ND	0.020	ND	0.098		1
cis-1,2-Dichloroethene	ND	0.020	ND	0.079		1
Ethylbenzene	ND	0.020	ND	0.087		1
Methylene chloride	ND	0.500	ND	1.74		1
Methyl tert butyl ether	ND	0.020	ND	0.072		1
Naphthalene	ND	0.050	ND	0.262		1
Xylenes, Total	ND	0.060	ND	0.260		1
Tetrachloroethene	ND	0.020	ND	0.136		1
Toluene	ND	0.050	ND	0.188		1

Project Name: UNIFIRST PROPERTY IA / VI

Project Number: 1-2114-2

Lab Number: L1004721

Report Date: 04/10/10

SAMPLE RESULTS

Lab ID: L1004721-04
Client ID: CAN 945 FC 256
Sample Location: WOBURN, MA

Date Collected: 04/02/10 00:00
Date Received: 04/03/10
Field Prep: Not Specified

Parameter	ppbV Results	ppbV RDL	ug/m3 Results	ug/m3 RDL	Qualifier	Dilution Factor
Volatile Organics in Air by SIM - Mansfield Lab						
trans-1,2-Dichloroethene	ND	0.020	ND	0.079		1
trans-1,3-Dichloropropene	ND	0.020	ND	0.091		1
Trichloroethene	ND	0.020	ND	0.107		1
Vinyl chloride	ND	0.020	ND	0.051		1
Isopropylbenzene	ND	0.500	ND	2.46		1

Project Name: UNIFIRST PROPERTY IA / VI
Project Number: 1-2114-2

Lab Number: L1004721
Report Date: 04/10/10

SAMPLE RESULTS

Lab ID: L1004721-05
Client ID: CAN 762 FC 233
Sample Location: WOBURN, MA
Matrix: Air
Anaytical Method: 48,TO-15-SIM
Analytical Date: 04/05/10 22:46
Analyst: AJ

Date Collected: 04/02/10 00:00
Date Received: 04/03/10
Field Prep: Not Specified

Parameter	ppbV Results	ppbV RDL	ug/m3 Results	ug/m3 RDL	Qualifier	Dilution Factor
Volatile Organics in Air by SIM - Mansfield Lab						
1,1,1-Trichloroethane	ND	0.020	ND	0.109		1
1,1,2-Trichloroethane	ND	0.020	ND	0.109		1
1,1-Dichloroethane	ND	0.020	ND	0.081		1
1,1-Dichloroethene	ND	0.020	ND	0.079		1
1,2,4-Trimethylbenzene	ND	0.020	ND	0.098		1
1,2-Dibromoethane	ND	0.020	ND	0.154		1
1,2-Dichloroethane	ND	0.020	ND	0.081		1
1,2-Dichloropropane	ND	0.020	ND	0.092		1
1,3-Butadiene	ND	0.020	ND	0.044		1
1,3-Dichlorobenzene	ND	0.020	ND	0.120		1
1,4-Dichlorobenzene	ND	0.020	ND	0.120		1
Benzene	ND	0.070	ND	0.223		1
Bromodichloromethane	ND	0.020	ND	0.134		1
Bromoform	ND	0.020	ND	0.206		1
Carbon tetrachloride	ND	0.020	ND	0.126		1
Chlorobenzene	ND	0.020	ND	0.092		1
Chloroform	ND	0.020	ND	0.098		1
cis-1,2-Dichloroethene	ND	0.020	ND	0.079		1
Ethylbenzene	ND	0.020	ND	0.087		1
Methylene chloride	ND	0.500	ND	1.74		1
Methyl tert butyl ether	ND	0.020	ND	0.072		1
Naphthalene	ND	0.050	ND	0.262		1
Xylenes, Total	ND	0.060	ND	0.260		1
Tetrachloroethene	ND	0.020	ND	0.136		1
Toluene	ND	0.050	ND	0.188		1

Project Name: UNIFIRST PROPERTY IA / VI

Project Number: 1-2114-2

Lab Number: L1004721

Report Date: 04/10/10

SAMPLE RESULTS

Lab ID: L1004721-05
Client ID: CAN 762 FC 233
Sample Location: WOBURN, MA

Date Collected: 04/02/10 00:00
Date Received: 04/03/10
Field Prep: Not Specified

Parameter	ppbV Results	ppbV RDL	ug/m3 Results	ug/m3 RDL	Qualifier	Dilution Factor
Volatile Organics in Air by SIM - Mansfield Lab						
trans-1,2-Dichloroethene	ND	0.020	ND	0.079		1
trans-1,3-Dichloropropene	ND	0.020	ND	0.091		1
Trichloroethene	ND	0.020	ND	0.107		1
Vinyl chloride	ND	0.020	ND	0.051		1
Isopropylbenzene	ND	0.500	ND	2.46		1

Project Name: UNIFIRST PROPERTY IA / VI
Project Number: 1-2114-2

Lab Number: L1004721
Report Date: 04/10/10

SAMPLE RESULTS

Lab ID: L1004721-06
Client ID: CAN 1707 FC 356
Sample Location: WOBURN, MA
Matrix: Air
Anaytical Method: 48,TO-15-SIM
Analytical Date: 04/05/10 23:21
Analyst: AJ

Date Collected: 04/02/10 00:00
Date Received: 04/03/10
Field Prep: Not Specified

Parameter	ppbV Results	ppbV RDL	ug/m3 Results	ug/m3 RDL	Qualifier	Dilution Factor
Volatile Organics in Air by SIM - Mansfield Lab						
1,1,1-Trichloroethane	ND	0.020	ND	0.109		1
1,1,2-Trichloroethane	ND	0.020	ND	0.109		1
1,1-Dichloroethane	ND	0.020	ND	0.081		1
1,1-Dichloroethene	ND	0.020	ND	0.079		1
1,2,4-Trimethylbenzene	ND	0.020	ND	0.098		1
1,2-Dibromoethane	ND	0.020	ND	0.154		1
1,2-Dichloroethane	ND	0.020	ND	0.081		1
1,2-Dichloropropane	ND	0.020	ND	0.092		1
1,3-Butadiene	ND	0.020	ND	0.044		1
1,3-Dichlorobenzene	ND	0.020	ND	0.120		1
1,4-Dichlorobenzene	ND	0.020	ND	0.120		1
Benzene	ND	0.070	ND	0.223		1
Bromodichloromethane	ND	0.020	ND	0.134		1
Bromoform	ND	0.020	ND	0.206		1
Carbon tetrachloride	ND	0.020	ND	0.126		1
Chlorobenzene	ND	0.020	ND	0.092		1
Chloroform	ND	0.020	ND	0.098		1
cis-1,2-Dichloroethene	ND	0.020	ND	0.079		1
Ethylbenzene	ND	0.020	ND	0.087		1
Methylene chloride	ND	0.500	ND	1.74		1
Methyl tert butyl ether	ND	0.020	ND	0.072		1
Naphthalene	ND	0.050	ND	0.262		1
Xylenes, Total	ND	0.060	ND	0.260		1
Tetrachloroethene	ND	0.020	ND	0.136		1
Toluene	ND	0.050	ND	0.188		1

Project Name: UNIFIRST PROPERTY IA / VI

Project Number: 1-2114-2

Lab Number: L1004721

Report Date: 04/10/10

SAMPLE RESULTS

Lab ID: L1004721-06
Client ID: CAN 1707 FC 356
Sample Location: WOBURN, MA

Date Collected: 04/02/10 00:00
Date Received: 04/03/10
Field Prep: Not Specified

Parameter	ppbV Results	ppbV RDL	ug/m3 Results	ug/m3 RDL	Qualifier	Dilution Factor
Volatile Organics in Air by SIM - Mansfield Lab						
trans-1,2-Dichloroethene	ND	0.020	ND	0.079		1
trans-1,3-Dichloropropene	ND	0.020	ND	0.091		1
Trichloroethene	ND	0.020	ND	0.107		1
Vinyl chloride	ND	0.020	ND	0.051		1
Isopropylbenzene	ND	0.500	ND	2.46		1

Project Name: UNIFIRST PROPERTY IA / VI
Project Number: 1-2114-2

Lab Number: L1004721
Report Date: 04/10/10

SAMPLE RESULTS

Lab ID: L1004721-07
Client ID: CAN 983 FC 349
Sample Location: WOBURN, MA
Matrix: Air
Anaytical Method: 48,TO-15-SIM
Analytical Date: 04/05/10 23:58
Analyst: AJ

Date Collected: 04/02/10 00:00
Date Received: 04/03/10
Field Prep: Not Specified

Parameter	ppbV Results	ppbV RDL	ug/m3 Results	ug/m3 RDL	Qualifier	Dilution Factor
Volatile Organics in Air by SIM - Mansfield Lab						
1,1,1-Trichloroethane	ND	0.020	ND	0.109		1
1,1,2-Trichloroethane	ND	0.020	ND	0.109		1
1,1-Dichloroethane	ND	0.020	ND	0.081		1
1,1-Dichloroethene	ND	0.020	ND	0.079		1
1,2,4-Trimethylbenzene	ND	0.020	ND	0.098		1
1,2-Dibromoethane	ND	0.020	ND	0.154		1
1,2-Dichloroethane	ND	0.020	ND	0.081		1
1,2-Dichloropropane	ND	0.020	ND	0.092		1
1,3-Butadiene	ND	0.020	ND	0.044		1
1,3-Dichlorobenzene	ND	0.020	ND	0.120		1
1,4-Dichlorobenzene	ND	0.020	ND	0.120		1
Benzene	ND	0.070	ND	0.223		1
Bromodichloromethane	ND	0.020	ND	0.134		1
Bromoform	ND	0.020	ND	0.206		1
Carbon tetrachloride	ND	0.020	ND	0.126		1
Chlorobenzene	ND	0.020	ND	0.092		1
Chloroform	ND	0.020	ND	0.098		1
cis-1,2-Dichloroethene	ND	0.020	ND	0.079		1
Ethylbenzene	ND	0.020	ND	0.087		1
Methylene chloride	ND	0.500	ND	1.74		1
Methyl tert butyl ether	ND	0.020	ND	0.072		1
Naphthalene	ND	0.050	ND	0.262		1
Xylenes, Total	ND	0.060	ND	0.260		1
Tetrachloroethene	ND	0.020	ND	0.136		1
Toluene	ND	0.050	ND	0.188		1

Project Name: UNIFIRST PROPERTY IA / VI

Project Number: 1-2114-2

Lab Number: L1004721

Report Date: 04/10/10

SAMPLE RESULTS

Lab ID: L1004721-07
Client ID: CAN 983 FC 349
Sample Location: WOBURN, MA

Date Collected: 04/02/10 00:00
Date Received: 04/03/10
Field Prep: Not Specified

Parameter	ppbV Results	ppbV RDL	ug/m3 Results	ug/m3 RDL	Qualifier	Dilution Factor
Volatile Organics in Air by SIM - Mansfield Lab						
trans-1,2-Dichloroethene	ND	0.020	ND	0.079		1
trans-1,3-Dichloropropene	ND	0.020	ND	0.091		1
Trichloroethene	ND	0.020	ND	0.107		1
Vinyl chloride	ND	0.020	ND	0.051		1
Isopropylbenzene	ND	0.500	ND	2.46		1

Project Name: UNIFIRST PROPERTY IA / VI
Project Number: 1-2114-2

Lab Number: L1004721
Report Date: 04/10/10

SAMPLE RESULTS

Lab ID: L1004721-08
Client ID: CAN 618 FC 047
Sample Location: WOBURN, MA
Matrix: Air
Anaytical Method: 48,TO-15-SIM
Analytical Date: 04/06/10 00:34
Analyst: AJ

Date Collected: 04/02/10 00:00
Date Received: 04/03/10
Field Prep: Not Specified

Parameter	ppbV Results	ppbV RDL	ug/m3 Results	ug/m3 RDL	Qualifier	Dilution Factor
Volatile Organics in Air by SIM - Mansfield Lab						
1,1,1-Trichloroethane	ND	0.020	ND	0.109		1
1,1,2-Trichloroethane	ND	0.020	ND	0.109		1
1,1-Dichloroethane	ND	0.020	ND	0.081		1
1,1-Dichloroethene	ND	0.020	ND	0.079		1
1,2,4-Trimethylbenzene	ND	0.020	ND	0.098		1
1,2-Dibromoethane	ND	0.020	ND	0.154		1
1,2-Dichloroethane	ND	0.020	ND	0.081		1
1,2-Dichloropropane	ND	0.020	ND	0.092		1
1,3-Butadiene	ND	0.020	ND	0.044		1
1,3-Dichlorobenzene	ND	0.020	ND	0.120		1
1,4-Dichlorobenzene	ND	0.020	ND	0.120		1
Benzene	ND	0.070	ND	0.223		1
Bromodichloromethane	ND	0.020	ND	0.134		1
Bromoform	ND	0.020	ND	0.206		1
Carbon tetrachloride	ND	0.020	ND	0.126		1
Chlorobenzene	ND	0.020	ND	0.092		1
Chloroform	ND	0.020	ND	0.098		1
cis-1,2-Dichloroethene	ND	0.020	ND	0.079		1
Ethylbenzene	ND	0.020	ND	0.087		1
Methylene chloride	ND	0.500	ND	1.74		1
Methyl tert butyl ether	ND	0.020	ND	0.072		1
Naphthalene	ND	0.050	ND	0.262		1
Xylenes, Total	ND	0.060	ND	0.260		1
Tetrachloroethene	ND	0.020	ND	0.136		1
Toluene	ND	0.050	ND	0.188		1

Project Name: UNIFIRST PROPERTY IA / VI

Project Number: 1-2114-2

Lab Number: L1004721

Report Date: 04/10/10

SAMPLE RESULTS

Lab ID: L1004721-08
Client ID: CAN 618 FC 047
Sample Location: WOBURN, MA

Date Collected: 04/02/10 00:00
Date Received: 04/03/10
Field Prep: Not Specified

Parameter	ppbV Results	ppbV RDL	ug/m3 Results	ug/m3 RDL	Qualifier	Dilution Factor
Volatile Organics in Air by SIM - Mansfield Lab						
trans-1,2-Dichloroethene	ND	0.020	ND	0.079		1
trans-1,3-Dichloropropene	ND	0.020	ND	0.091		1
Trichloroethene	ND	0.020	ND	0.107		1
Vinyl chloride	ND	0.020	ND	0.051		1
Isopropylbenzene	ND	0.500	ND	2.46		1

Project Name: UNIFIRST PROPERTY IA / VI
Project Number: 1-2114-2

Lab Number: L1004721
Report Date: 04/10/10

SAMPLE RESULTS

Lab ID: L1004721-09
Client ID: CAN 1667 FC 379
Sample Location: WOBURN, MA
Matrix: Air
Anaytical Method: 48,TO-15-SIM
Analytical Date: 04/06/10 01:10
Analyst: AJ

Date Collected: 04/02/10 00:00
Date Received: 04/03/10
Field Prep: Not Specified

Parameter	ppbV Results	ppbV RDL	ug/m3 Results	ug/m3 RDL	Qualifier	Dilution Factor
Volatile Organics in Air by SIM - Mansfield Lab						
1,1,1-Trichloroethane	ND	0.020	ND	0.109		1
1,1,2-Trichloroethane	ND	0.020	ND	0.109		1
1,1-Dichloroethane	ND	0.020	ND	0.081		1
1,1-Dichloroethene	ND	0.020	ND	0.079		1
1,2,4-Trimethylbenzene	ND	0.020	ND	0.098		1
1,2-Dibromoethane	ND	0.020	ND	0.154		1
1,2-Dichloroethane	ND	0.020	ND	0.081		1
1,2-Dichloropropane	ND	0.020	ND	0.092		1
1,3-Butadiene	ND	0.020	ND	0.044		1
1,3-Dichlorobenzene	ND	0.020	ND	0.120		1
1,4-Dichlorobenzene	ND	0.020	ND	0.120		1
Benzene	ND	0.070	ND	0.223		1
Bromodichloromethane	ND	0.020	ND	0.134		1
Bromoform	ND	0.020	ND	0.206		1
Carbon tetrachloride	ND	0.020	ND	0.126		1
Chlorobenzene	ND	0.020	ND	0.092		1
Chloroform	ND	0.020	ND	0.098		1
cis-1,2-Dichloroethene	ND	0.020	ND	0.079		1
Ethylbenzene	ND	0.020	ND	0.087		1
Methylene chloride	ND	0.500	ND	1.74		1
Methyl tert butyl ether	ND	0.020	ND	0.072		1
Naphthalene	ND	0.050	ND	0.262		1
Xylenes, Total	ND	0.060	ND	0.260		1
Tetrachloroethene	ND	0.020	ND	0.136		1
Toluene	ND	0.050	ND	0.188		1

Project Name: UNIFIRST PROPERTY IA / VI

Project Number: 1-2114-2

Lab Number: L1004721

Report Date: 04/10/10

SAMPLE RESULTS

Lab ID: L1004721-09
Client ID: CAN 1667 FC 379
Sample Location: WOBURN, MA

Date Collected: 04/02/10 00:00
Date Received: 04/03/10
Field Prep: Not Specified

Parameter	ppbV Results	ppbV RDL	ug/m3 Results	ug/m3 RDL	Qualifier	Dilution Factor
Volatile Organics in Air by SIM - Mansfield Lab						
trans-1,2-Dichloroethene	ND	0.020	ND	0.079		1
trans-1,3-Dichloropropene	ND	0.020	ND	0.091		1
Trichloroethene	ND	0.020	ND	0.107		1
Vinyl chloride	ND	0.020	ND	0.051		1
Isopropylbenzene	ND	0.500	ND	2.46		1

Project Name: UNIFIRST PROPERTY IA / VI

Project Number: 1-2114-2

Lab Number: L1004721

Report Date: 04/10/10

SAMPLE RESULTS

Lab ID:	L1004721-10	Date Collected:	04/02/10 00:00
Client ID:	CAN 584 FC 081	Date Received:	04/03/10
Sample Location:	WOBURN, MA	Field Prep:	Not Specified
Matrix:	Air		
Anaytical Method:	48,TO-15-SIM		
Analytical Date:	04/06/10 01:44		
Analyst:	AJ		

	ppbV		ug/m3			
Parameter	Results	RDL	Results	RDL	Qualifier	Dilution Factor
Volatile Organics in Air by SIM - Mansfield Lab						
1,1,1-Trichloroethane	ND	0.020	ND	0.109		1
1,1,2-Trichloroethane	ND	0.020	ND	0.109		1
1,1-Dichloroethane	ND	0.020	ND	0.081		1
1,1-Dichloroethene	ND	0.020	ND	0.079		1
1,2,4-Trimethylbenzene	ND	0.020	ND	0.098		1
1,2-Dibromoethane	ND	0.020	ND	0.154		1
1,2-Dichloroethane	ND	0.020	ND	0.081		1
1,2-Dichloropropane	ND	0.020	ND	0.092		1
1,3-Butadiene	ND	0.020	ND	0.044		1
1,3-Dichlorobenzene	ND	0.020	ND	0.120		1
1,4-Dichlorobenzene	ND	0.020	ND	0.120		1
Benzene	ND	0.070	ND	0.223		1
Bromodichloromethane	ND	0.020	ND	0.134		1
Bromoform	ND	0.020	ND	0.206		1
Carbon tetrachloride	ND	0.020	ND	0.126		1
Chlorobenzene	ND	0.020	ND	0.092		1
Chloroform	ND	0.020	ND	0.098		1
cis-1,2-Dichloroethene	ND	0.020	ND	0.079		1
Ethylbenzene	ND	0.020	ND	0.087		1
Methylene chloride	ND	0.500	ND	1.74		1
Methyl tert butyl ether	ND	0.020	ND	0.072		1
Naphthalene	ND	0.050	ND	0.262		1
Xylenes, Total	ND	0.060	ND	0.260		1
Tetrachloroethene	ND	0.020	ND	0.136		1
Toluene	ND	0.050	ND	0.188		1

Project Name: UNIFIRST PROPERTY IA / VI

Project Number: 1-2114-2

Lab Number: L1004721

Report Date: 04/10/10

SAMPLE RESULTS

Lab ID: L1004721-10
Client ID: CAN 584 FC 081
Sample Location: WOBURN, MA

Date Collected: 04/02/10 00:00
Date Received: 04/03/10
Field Prep: Not Specified

Parameter	ppbV Results	ppbV RDL	ug/m3 Results	ug/m3 RDL	Qualifier	Dilution Factor
Volatile Organics in Air by SIM - Mansfield Lab						
trans-1,2-Dichloroethene	ND	0.020	ND	0.079		1
trans-1,3-Dichloropropene	ND	0.020	ND	0.091		1
Trichloroethene	ND	0.020	ND	0.107		1
Vinyl chloride	ND	0.020	ND	0.051		1
Isopropylbenzene	ND	0.500	ND	2.46		1

Project Name: UNIFIRST PROPERTY IA / VI

Project Number: 1-2114-2

Lab Number: L1004721

Report Date: 04/10/10

SAMPLE RESULTS

Lab ID: L1004721-11
Client ID: CAN 1036 FC 333
Sample Location: WOBURN, MA
Matrix: Air
Anaytical Method: 48,TO-15-SIM
Analytical Date: 04/06/10 02:19
Analyst: AJ

Date Collected: 04/02/10 00:00
Date Received: 04/03/10
Field Prep: Not Specified

Parameter	ppbV Results	ppbV RDL	ug/m3 Results	ug/m3 RDL	Qualifier	Dilution Factor
Volatile Organics in Air by SIM - Mansfield Lab						
1,1,1-Trichloroethane	ND	0.020	ND	0.109		1
1,1,2-Trichloroethane	ND	0.020	ND	0.109		1
1,1-Dichloroethane	ND	0.020	ND	0.081		1
1,1-Dichloroethene	ND	0.020	ND	0.079		1
1,2,4-Trimethylbenzene	ND	0.020	ND	0.098		1
1,2-Dibromoethane	ND	0.020	ND	0.154		1
1,2-Dichloroethane	ND	0.020	ND	0.081		1
1,2-Dichloropropane	ND	0.020	ND	0.092		1
1,3-Butadiene	ND	0.020	ND	0.044		1
1,3-Dichlorobenzene	ND	0.020	ND	0.120		1
1,4-Dichlorobenzene	ND	0.020	ND	0.120		1
Benzene	ND	0.070	ND	0.223		1
Bromodichloromethane	ND	0.020	ND	0.134		1
Bromoform	ND	0.020	ND	0.206		1
Carbon tetrachloride	ND	0.020	ND	0.126		1
Chlorobenzene	ND	0.020	ND	0.092		1
Chloroform	ND	0.020	ND	0.098		1
cis-1,2-Dichloroethene	ND	0.020	ND	0.079		1
Ethylbenzene	ND	0.020	ND	0.087		1
Methylene chloride	ND	0.500	ND	1.74		1
Methyl tert butyl ether	ND	0.020	ND	0.072		1
Naphthalene	ND	0.050	ND	0.262		1
Xylenes, Total	ND	0.060	ND	0.260		1
Tetrachloroethene	ND	0.020	ND	0.136		1
Toluene	ND	0.050	ND	0.188		1

Project Name: UNIFIRST PROPERTY IA / VI

Project Number: 1-2114-2

Lab Number: L1004721

Report Date: 04/10/10

SAMPLE RESULTS

Lab ID: L1004721-11
Client ID: CAN 1036 FC 333
Sample Location: WOBURN, MA

Date Collected: 04/02/10 00:00
Date Received: 04/03/10
Field Prep: Not Specified

Parameter	ppbV Results	ppbV RDL	ug/m3 Results	ug/m3 RDL	Qualifier	Dilution Factor
Volatile Organics in Air by SIM - Mansfield Lab						
trans-1,2-Dichloroethene	ND	0.020	ND	0.079		1
trans-1,3-Dichloropropene	ND	0.020	ND	0.091		1
Trichloroethene	ND	0.020	ND	0.107		1
Vinyl chloride	ND	0.020	ND	0.051		1
Isopropylbenzene	ND	0.500	ND	2.46		1

Project Name: UNIFIRST PROPERTY IA / VI
Project Number: 1-2114-2

Lab Number: L1004721
Report Date: 04/10/10

SAMPLE RESULTS

Lab ID: L1004721-12
Client ID: CAN 782 FC 175
Sample Location: WOBURN, MA
Matrix: Air
Anaytical Method: 48,TO-15-SIM
Analytical Date: 04/06/10 02:53
Analyst: AJ

Date Collected: 04/02/10 00:00
Date Received: 04/03/10
Field Prep: Not Specified

Parameter	ppbV Results	ppbV RDL	ug/m3 Results	ug/m3 RDL	Qualifier	Dilution Factor
Volatile Organics in Air by SIM - Mansfield Lab						
1,1,1-Trichloroethane	ND	0.020	ND	0.109		1
1,1,2-Trichloroethane	ND	0.020	ND	0.109		1
1,1-Dichloroethane	ND	0.020	ND	0.081		1
1,1-Dichloroethene	ND	0.020	ND	0.079		1
1,2,4-Trimethylbenzene	ND	0.020	ND	0.098		1
1,2-Dibromoethane	ND	0.020	ND	0.154		1
1,2-Dichloroethane	ND	0.020	ND	0.081		1
1,2-Dichloropropane	ND	0.020	ND	0.092		1
1,3-Butadiene	ND	0.020	ND	0.044		1
1,3-Dichlorobenzene	ND	0.020	ND	0.120		1
1,4-Dichlorobenzene	ND	0.020	ND	0.120		1
Benzene	ND	0.070	ND	0.223		1
Bromodichloromethane	ND	0.020	ND	0.134		1
Bromoform	ND	0.020	ND	0.206		1
Carbon tetrachloride	ND	0.020	ND	0.126		1
Chlorobenzene	ND	0.020	ND	0.092		1
Chloroform	ND	0.020	ND	0.098		1
cis-1,2-Dichloroethene	ND	0.020	ND	0.079		1
Ethylbenzene	ND	0.020	ND	0.087		1
Methylene chloride	ND	0.500	ND	1.74		1
Methyl tert butyl ether	ND	0.020	ND	0.072		1
Naphthalene	ND	0.050	ND	0.262		1
Xylenes, Total	ND	0.060	ND	0.260		1
Tetrachloroethene	ND	0.020	ND	0.136		1
Toluene	ND	0.050	ND	0.188		1

Project Name: UNIFIRST PROPERTY IA / VI

Project Number: 1-2114-2

Lab Number: L1004721

Report Date: 04/10/10

SAMPLE RESULTS

Lab ID: L1004721-12
Client ID: CAN 782 FC 175
Sample Location: WOBURN, MA

Date Collected: 04/02/10 00:00
Date Received: 04/03/10
Field Prep: Not Specified

Parameter	ppbV Results	ppbV RDL	ug/m3 Results	ug/m3 RDL	Qualifier	Dilution Factor
Volatile Organics in Air by SIM - Mansfield Lab						
trans-1,2-Dichloroethene	ND	0.020	ND	0.079		1
trans-1,3-Dichloropropene	ND	0.020	ND	0.091		1
Trichloroethene	ND	0.020	ND	0.107		1
Vinyl chloride	ND	0.020	ND	0.051		1
Isopropylbenzene	ND	0.500	ND	2.46		1

Project Name: UNIFIRST PROPERTY IA / VI
Project Number: 1-2114-2

Lab Number: L1004721
Report Date: 04/10/10

SAMPLE RESULTS

Lab ID: L1004721-13
Client ID: CAN 1628 FC 360
Sample Location: WOBURN, MA
Matrix: Air
Anaytical Method: 48,TO-15-SIM
Analytical Date: 04/06/10 03:27
Analyst: AJ

Date Collected: 04/02/10 00:00
Date Received: 04/03/10
Field Prep: Not Specified

Parameter	ppbV Results	ppbV RDL	ug/m3 Results	ug/m3 RDL	Qualifier	Dilution Factor
Volatile Organics in Air by SIM - Mansfield Lab						
1,1,1-Trichloroethane	ND	0.020	ND	0.109		1
1,1,2-Trichloroethane	ND	0.020	ND	0.109		1
1,1-Dichloroethane	ND	0.020	ND	0.081		1
1,1-Dichloroethene	ND	0.020	ND	0.079		1
1,2,4-Trimethylbenzene	ND	0.020	ND	0.098		1
1,2-Dibromoethane	ND	0.020	ND	0.154		1
1,2-Dichloroethane	ND	0.020	ND	0.081		1
1,2-Dichloropropane	ND	0.020	ND	0.092		1
1,3-Butadiene	ND	0.020	ND	0.044		1
1,3-Dichlorobenzene	ND	0.020	ND	0.120		1
1,4-Dichlorobenzene	ND	0.020	ND	0.120		1
Benzene	ND	0.070	ND	0.223		1
Bromodichloromethane	ND	0.020	ND	0.134		1
Bromoform	ND	0.020	ND	0.206		1
Carbon tetrachloride	ND	0.020	ND	0.126		1
Chlorobenzene	ND	0.020	ND	0.092		1
Chloroform	ND	0.020	ND	0.098		1
cis-1,2-Dichloroethene	ND	0.020	ND	0.079		1
Ethylbenzene	ND	0.020	ND	0.087		1
Methylene chloride	ND	0.500	ND	1.74		1
Methyl tert butyl ether	ND	0.020	ND	0.072		1
Naphthalene	ND	0.050	ND	0.262		1
Xylenes, Total	ND	0.060	ND	0.260		1
Tetrachloroethene	ND	0.020	ND	0.136		1
Toluene	ND	0.050	ND	0.188		1

Project Name: UNIFIRST PROPERTY IA / VI

Project Number: 1-2114-2

Lab Number: L1004721

Report Date: 04/10/10

SAMPLE RESULTS

Lab ID: L1004721-13
Client ID: CAN 1628 FC 360
Sample Location: WOBURN, MA

Date Collected: 04/02/10 00:00
Date Received: 04/03/10
Field Prep: Not Specified

Parameter	ppbV Results	ppbV RDL	ug/m3 Results	ug/m3 RDL	Qualifier	Dilution Factor
Volatile Organics in Air by SIM - Mansfield Lab						
trans-1,2-Dichloroethene	ND	0.020	ND	0.079		1
trans-1,3-Dichloropropene	ND	0.020	ND	0.091		1
Trichloroethene	ND	0.020	ND	0.107		1
Vinyl chloride	ND	0.020	ND	0.051		1
Isopropylbenzene	ND	0.500	ND	2.46		1

Project Name: UNIFIRST PROPERTY IA / VI
Project Number: 1-2114-2

Lab Number: L1004721
Report Date: 04/10/10

SAMPLE RESULTS

Lab ID: L1004721-14
Client ID: CAN 972 FC 277
Sample Location: WOBURN, MA
Matrix: Air
Anaytical Method: 48,TO-15-SIM
Analytical Date: 04/06/10 17:18
Analyst: AJ

Date Collected: 04/02/10 00:00
Date Received: 04/03/10
Field Prep: Not Specified

Parameter	ppbV Results	ppbV RDL	ug/m3 Results	ug/m3 RDL	Qualifier	Dilution Factor
Volatile Organics in Air by SIM - Mansfield Lab						
1,1,1-Trichloroethane	ND	0.020	ND	0.109		1
1,1,2-Trichloroethane	ND	0.020	ND	0.109		1
1,1-Dichloroethane	ND	0.020	ND	0.081		1
1,1-Dichloroethene	ND	0.020	ND	0.079		1
1,2,4-Trimethylbenzene	ND	0.020	ND	0.098		1
1,2-Dibromoethane	ND	0.020	ND	0.154		1
1,2-Dichloroethane	ND	0.020	ND	0.081		1
1,2-Dichloropropane	ND	0.020	ND	0.092		1
1,3-Butadiene	ND	0.020	ND	0.044		1
1,3-Dichlorobenzene	ND	0.020	ND	0.120		1
1,4-Dichlorobenzene	ND	0.020	ND	0.120		1
Benzene	ND	0.070	ND	0.223		1
Bromodichloromethane	ND	0.020	ND	0.134		1
Bromoform	ND	0.020	ND	0.206		1
Carbon tetrachloride	ND	0.020	ND	0.126		1
Chlorobenzene	ND	0.020	ND	0.092		1
Chloroform	ND	0.020	ND	0.098		1
cis-1,2-Dichloroethene	ND	0.020	ND	0.079		1
Ethylbenzene	ND	0.020	ND	0.087		1
Methylene chloride	ND	0.500	ND	1.74		1
Methyl tert butyl ether	ND	0.020	ND	0.072		1
Naphthalene	ND	0.050	ND	0.262		1
Xylenes, Total	ND	0.060	ND	0.260		1
Tetrachloroethene	ND	0.020	ND	0.136		1
Toluene	ND	0.050	ND	0.188		1

Project Name: UNIFIRST PROPERTY IA / VI

Project Number: 1-2114-2

Lab Number: L1004721

Report Date: 04/10/10

SAMPLE RESULTS

Lab ID: L1004721-14
Client ID: CAN 972 FC 277
Sample Location: WOBURN, MA

Date Collected: 04/02/10 00:00
Date Received: 04/03/10
Field Prep: Not Specified

Parameter	ppbV Results	ppbV RDL	ug/m3 Results	ug/m3 RDL	Qualifier	Dilution Factor
Volatile Organics in Air by SIM - Mansfield Lab						
trans-1,2-Dichloroethene	ND	0.020	ND	0.079		1
trans-1,3-Dichloropropene	ND	0.020	ND	0.091		1
Trichloroethene	ND	0.020	ND	0.107		1
Vinyl chloride	ND	0.020	ND	0.051		1
Isopropylbenzene	ND	0.500	ND	2.46		1

Project Name: UNIFIRST PROPERTY IA / VI

Project Number: 1-2114-2

Lab Number: L1004721

Report Date: 04/10/10

SAMPLE RESULTS

Lab ID: L1004721-15
Client ID: CAN 1690 FC 028
Sample Location: WOBURN, MA
Matrix: Air
Anaytical Method: 48,TO-15-SIM
Analytical Date: 04/06/10 17:53
Analyst: AJ

Date Collected: 04/02/10 00:00
Date Received: 04/03/10
Field Prep: Not Specified

Parameter	ppbV Results	ppbV RDL	ug/m3 Results	ug/m3 RDL	Qualifier	Dilution Factor
Volatile Organics in Air by SIM - Mansfield Lab						
1,1,1-Trichloroethane	ND	0.020	ND	0.109		1
1,1,2-Trichloroethane	ND	0.020	ND	0.109		1
1,1-Dichloroethane	ND	0.020	ND	0.081		1
1,1-Dichloroethene	ND	0.020	ND	0.079		1
1,2,4-Trimethylbenzene	ND	0.020	ND	0.098		1
1,2-Dibromoethane	ND	0.020	ND	0.154		1
1,2-Dichloroethane	ND	0.020	ND	0.081		1
1,2-Dichloropropane	ND	0.020	ND	0.092		1
1,3-Butadiene	ND	0.020	ND	0.044		1
1,3-Dichlorobenzene	ND	0.020	ND	0.120		1
1,4-Dichlorobenzene	ND	0.020	ND	0.120		1
Benzene	ND	0.070	ND	0.223		1
Bromodichloromethane	ND	0.020	ND	0.134		1
Bromoform	ND	0.020	ND	0.206		1
Carbon tetrachloride	ND	0.020	ND	0.126		1
Chlorobenzene	ND	0.020	ND	0.092		1
Chloroform	ND	0.020	ND	0.098		1
cis-1,2-Dichloroethene	ND	0.020	ND	0.079		1
Ethylbenzene	ND	0.020	ND	0.087		1
Methylene chloride	ND	0.500	ND	1.74		1
Methyl tert butyl ether	ND	0.020	ND	0.072		1
Naphthalene	ND	0.050	ND	0.262		1
Xylenes, Total	ND	0.060	ND	0.260		1
Tetrachloroethene	ND	0.020	ND	0.136		1
Toluene	ND	0.050	ND	0.188		1

Project Name: UNIFIRST PROPERTY IA / VI

Project Number: 1-2114-2

Lab Number: L1004721

Report Date: 04/10/10

SAMPLE RESULTS

Lab ID: L1004721-15
Client ID: CAN 1690 FC 028
Sample Location: WOBURN, MA

Date Collected: 04/02/10 00:00
Date Received: 04/03/10
Field Prep: Not Specified

Parameter	ppbV Results	ppbV RDL	ug/m3 Results	ug/m3 RDL	Qualifier	Dilution Factor
Volatile Organics in Air by SIM - Mansfield Lab						
trans-1,2-Dichloroethene	ND	0.020	ND	0.079		1
trans-1,3-Dichloropropene	ND	0.020	ND	0.091		1
Trichloroethene	ND	0.020	ND	0.107		1
Vinyl chloride	ND	0.020	ND	0.051		1
Isopropylbenzene	ND	0.500	ND	2.46		1

Project Name: UNIFIRST PROPERTY IA / VI

Project Number: 1-2114-2

Lab Number: L1004721

Report Date: 04/10/10

SAMPLE RESULTS

Lab ID: L1004721-16
Client ID: CAN 1614 FC 309
Sample Location: WOBURN, MA
Matrix: Air
Anaytical Method: 48,TO-15-SIM
Analytical Date: 04/06/10 18:28
Analyst: AJ

Date Collected: 04/02/10 00:00
Date Received: 04/03/10
Field Prep: Not Specified

Parameter	ppbV Results	ppbV RDL	ug/m3 Results	ug/m3 RDL	Qualifier	Dilution Factor
Volatile Organics in Air by SIM - Mansfield Lab						
1,1,1-Trichloroethane	ND	0.020	ND	0.109		1
1,1,2-Trichloroethane	ND	0.020	ND	0.109		1
1,1-Dichloroethane	ND	0.020	ND	0.081		1
1,1-Dichloroethene	ND	0.020	ND	0.079		1
1,2,4-Trimethylbenzene	ND	0.020	ND	0.098		1
1,2-Dibromoethane	ND	0.020	ND	0.154		1
1,2-Dichloroethane	ND	0.020	ND	0.081		1
1,2-Dichloropropane	ND	0.020	ND	0.092		1
1,3-Butadiene	ND	0.020	ND	0.044		1
1,3-Dichlorobenzene	ND	0.020	ND	0.120		1
1,4-Dichlorobenzene	ND	0.020	ND	0.120		1
Benzene	ND	0.070	ND	0.223		1
Bromodichloromethane	ND	0.020	ND	0.134		1
Bromoform	ND	0.020	ND	0.206		1
Carbon tetrachloride	ND	0.020	ND	0.126		1
Chlorobenzene	ND	0.020	ND	0.092		1
Chloroform	ND	0.020	ND	0.098		1
cis-1,2-Dichloroethene	ND	0.020	ND	0.079		1
Ethylbenzene	ND	0.020	ND	0.087		1
Methylene chloride	ND	0.500	ND	1.74		1
Methyl tert butyl ether	ND	0.020	ND	0.072		1
Naphthalene	ND	0.050	ND	0.262		1
Xylenes, Total	ND	0.060	ND	0.260		1
Tetrachloroethene	ND	0.020	ND	0.136		1
Toluene	ND	0.050	ND	0.188		1

Project Name: UNIFIRST PROPERTY IA / VI

Project Number: 1-2114-2

Lab Number: L1004721

Report Date: 04/10/10

SAMPLE RESULTS

Lab ID: L1004721-16
Client ID: CAN 1614 FC 309
Sample Location: WOBURN, MA

Date Collected: 04/02/10 00:00
Date Received: 04/03/10
Field Prep: Not Specified

Parameter	ppbV Results	ppbV RDL	ug/m3 Results	ug/m3 RDL	Qualifier	Dilution Factor
Volatile Organics in Air by SIM - Mansfield Lab						
trans-1,2-Dichloroethene	ND	0.020	ND	0.079		1
trans-1,3-Dichloropropene	ND	0.020	ND	0.091		1
Trichloroethene	ND	0.020	ND	0.107		1
Vinyl chloride	ND	0.020	ND	0.051		1
Isopropylbenzene	ND	0.500	ND	2.46		1

Project Name: UNIFIRST PROPERTY IA / VI

Project Number: 1-2114-2

Lab Number: L1004721

Report Date: 04/10/10

SAMPLE RESULTS

Lab ID: L1004721-17
Client ID: CAN 639 FC 231
Sample Location: WOBURN, MA
Matrix: Air
Anaytical Method: 48,TO-15-SIM
Analytical Date: 04/06/10 19:03
Analyst: AJ

Date Collected: 04/02/10 00:00
Date Received: 04/03/10
Field Prep: Not Specified

Parameter	ppbV Results	ppbV RDL	ug/m3 Results	ug/m3 RDL	Qualifier	Dilution Factor
Volatile Organics in Air by SIM - Mansfield Lab						
1,1,1-Trichloroethane	ND	0.020	ND	0.109		1
1,1,2-Trichloroethane	ND	0.020	ND	0.109		1
1,1-Dichloroethane	ND	0.020	ND	0.081		1
1,1-Dichloroethene	ND	0.020	ND	0.079		1
1,2,4-Trimethylbenzene	ND	0.020	ND	0.098		1
1,2-Dibromoethane	ND	0.020	ND	0.154		1
1,2-Dichloroethane	ND	0.020	ND	0.081		1
1,2-Dichloropropane	ND	0.020	ND	0.092		1
1,3-Butadiene	ND	0.020	ND	0.044		1
1,3-Dichlorobenzene	ND	0.020	ND	0.120		1
1,4-Dichlorobenzene	ND	0.020	ND	0.120		1
Benzene	ND	0.070	ND	0.223		1
Bromodichloromethane	ND	0.020	ND	0.134		1
Bromoform	ND	0.020	ND	0.206		1
Carbon tetrachloride	ND	0.020	ND	0.126		1
Chlorobenzene	ND	0.020	ND	0.092		1
Chloroform	ND	0.020	ND	0.098		1
cis-1,2-Dichloroethene	ND	0.020	ND	0.079		1
Ethylbenzene	ND	0.020	ND	0.087		1
Methylene chloride	ND	0.500	ND	1.74		1
Methyl tert butyl ether	ND	0.020	ND	0.072		1
Naphthalene	ND	0.050	ND	0.262		1
Xylenes, Total	ND	0.060	ND	0.260		1
Tetrachloroethene	ND	0.020	ND	0.136		1
Toluene	ND	0.050	ND	0.188		1

Project Name: UNIFIRST PROPERTY IA / VI

Project Number: 1-2114-2

Lab Number: L1004721

Report Date: 04/10/10

SAMPLE RESULTS

Lab ID: L1004721-17
Client ID: CAN 639 FC 231
Sample Location: WOBURN, MA

Date Collected: 04/02/10 00:00
Date Received: 04/03/10
Field Prep: Not Specified

Parameter	ppbV Results	ppbV RDL	ug/m3 Results	ug/m3 RDL	Qualifier	Dilution Factor
Volatile Organics in Air by SIM - Mansfield Lab						
trans-1,2-Dichloroethene	ND	0.020	ND	0.079		1
trans-1,3-Dichloropropene	ND	0.020	ND	0.091		1
Trichloroethene	ND	0.020	ND	0.107		1
Vinyl chloride	ND	0.020	ND	0.051		1
Isopropylbenzene	ND	0.500	ND	2.46		1

Project Name: UNIFIRST PROPERTY IA / VI
Project Number: 1-2114-2

Lab Number: L1004721
Report Date: 04/10/10

SAMPLE RESULTS

Lab ID: L1004721-18
Client ID: CAN 1566 FC 262
Sample Location: WOBURN, MA
Matrix: Air
Anaytical Method: 48,TO-15-SIM
Analytical Date: 04/06/10 19:38
Analyst: AJ

Date Collected: 04/02/10 00:00
Date Received: 04/03/10
Field Prep: Not Specified

Parameter	ppbV Results	ppbV RDL	ug/m3 Results	ug/m3 RDL	Qualifier	Dilution Factor
Volatile Organics in Air by SIM - Mansfield Lab						
1,1,1-Trichloroethane	ND	0.020	ND	0.109		1
1,1,2-Trichloroethane	ND	0.020	ND	0.109		1
1,1-Dichloroethane	ND	0.020	ND	0.081		1
1,1-Dichloroethene	ND	0.020	ND	0.079		1
1,2,4-Trimethylbenzene	ND	0.020	ND	0.098		1
1,2-Dibromoethane	ND	0.020	ND	0.154		1
1,2-Dichloroethane	ND	0.020	ND	0.081		1
1,2-Dichloropropane	ND	0.020	ND	0.092		1
1,3-Butadiene	ND	0.020	ND	0.044		1
1,3-Dichlorobenzene	ND	0.020	ND	0.120		1
1,4-Dichlorobenzene	ND	0.020	ND	0.120		1
Benzene	ND	0.070	ND	0.223		1
Bromodichloromethane	ND	0.020	ND	0.134		1
Bromoform	ND	0.020	ND	0.206		1
Carbon tetrachloride	ND	0.020	ND	0.126		1
Chlorobenzene	ND	0.020	ND	0.092		1
Chloroform	ND	0.020	ND	0.098		1
cis-1,2-Dichloroethene	ND	0.020	ND	0.079		1
Ethylbenzene	ND	0.020	ND	0.087		1
Methylene chloride	ND	0.500	ND	1.74		1
Methyl tert butyl ether	ND	0.020	ND	0.072		1
Naphthalene	ND	0.050	ND	0.262		1
Xylenes, Total	ND	0.060	ND	0.260		1
Tetrachloroethene	ND	0.020	ND	0.136		1
Toluene	ND	0.050	ND	0.188		1

Project Name: UNIFIRST PROPERTY IA / VI

Project Number: 1-2114-2

Lab Number: L1004721

Report Date: 04/10/10

SAMPLE RESULTS

Lab ID: L1004721-18
Client ID: CAN 1566 FC 262
Sample Location: WOBURN, MA

Date Collected: 04/02/10 00:00
Date Received: 04/03/10
Field Prep: Not Specified

Parameter	ppbV Results	ppbV RDL	ug/m3 Results	ug/m3 RDL	Qualifier	Dilution Factor
Volatile Organics in Air by SIM - Mansfield Lab						
trans-1,2-Dichloroethene	ND	0.020	ND	0.079		1
trans-1,3-Dichloropropene	ND	0.020	ND	0.091		1
Trichloroethene	ND	0.020	ND	0.107		1
Vinyl chloride	ND	0.020	ND	0.051		1
Isopropylbenzene	ND	0.500	ND	2.46		1

Project Name: UNIFIRST PROPERTY IA / VI
Project Number: 1-2114-2

Lab Number: L1004721
Report Date: 04/10/10

SAMPLE RESULTS

Lab ID: L1004721-19
Client ID: CAN 1626 FC 002
Sample Location: WOBURN, MA
Matrix: Air
Anaytical Method: 48,TO-15-SIM
Analytical Date: 04/06/10 20:13
Analyst: AJ

Date Collected: 04/02/10 00:00
Date Received: 04/03/10
Field Prep: Not Specified

Parameter	ppbV Results	ppbV RDL	ug/m3 Results	ug/m3 RDL	Qualifier	Dilution Factor
Volatile Organics in Air by SIM - Mansfield Lab						
1,1,1-Trichloroethane	ND	0.020	ND	0.109		1
1,1,2-Trichloroethane	ND	0.020	ND	0.109		1
1,1-Dichloroethane	ND	0.020	ND	0.081		1
1,1-Dichloroethene	ND	0.020	ND	0.079		1
1,2,4-Trimethylbenzene	ND	0.020	ND	0.098		1
1,2-Dibromoethane	ND	0.020	ND	0.154		1
1,2-Dichloroethane	ND	0.020	ND	0.081		1
1,2-Dichloropropane	ND	0.020	ND	0.092		1
1,3-Butadiene	ND	0.020	ND	0.044		1
1,3-Dichlorobenzene	ND	0.020	ND	0.120		1
1,4-Dichlorobenzene	ND	0.020	ND	0.120		1
Benzene	ND	0.070	ND	0.223		1
Bromodichloromethane	ND	0.020	ND	0.134		1
Bromoform	ND	0.020	ND	0.206		1
Carbon tetrachloride	ND	0.020	ND	0.126		1
Chlorobenzene	ND	0.020	ND	0.092		1
Chloroform	ND	0.020	ND	0.098		1
cis-1,2-Dichloroethene	ND	0.020	ND	0.079		1
Ethylbenzene	ND	0.020	ND	0.087		1
Methylene chloride	ND	0.500	ND	1.74		1
Methyl tert butyl ether	ND	0.020	ND	0.072		1
Naphthalene	ND	0.050	ND	0.262		1
Xylenes, Total	ND	0.060	ND	0.260		1
Tetrachloroethene	ND	0.020	ND	0.136		1
Toluene	ND	0.050	ND	0.188		1

Project Name: UNIFIRST PROPERTY IA / VI

Project Number: 1-2114-2

Lab Number: L1004721

Report Date: 04/10/10

SAMPLE RESULTS

Lab ID: L1004721-19
Client ID: CAN 1626 FC 002
Sample Location: WOBURN, MA

Date Collected: 04/02/10 00:00
Date Received: 04/03/10
Field Prep: Not Specified

Parameter	ppbV Results	ppbV RDL	ug/m3 Results	ug/m3 RDL	Qualifier	Dilution Factor
Volatile Organics in Air by SIM - Mansfield Lab						
trans-1,2-Dichloroethene	ND	0.020	ND	0.079		1
trans-1,3-Dichloropropene	ND	0.020	ND	0.091		1
Trichloroethene	ND	0.020	ND	0.107		1
Vinyl chloride	ND	0.020	ND	0.051		1
Isopropylbenzene	ND	0.500	ND	2.46		1

Project Name: UNIFIRST PROPERTY IA / VI

Project Number: 1-2114-2

Lab Number: L1004721

Report Date: 04/10/10

SAMPLE RESULTS

Lab ID: L1004721-20
Client ID: CAN 695 FC 290
Sample Location: WOBURN, MA
Matrix: Air
Anaytical Method: 48,TO-15-SIM
Analytical Date: 04/06/10 20:48
Analyst: AJ

Date Collected: 04/02/10 00:00
Date Received: 04/03/10
Field Prep: Not Specified

Parameter	ppbV Results	ppbV RDL	ug/m3 Results	ug/m3 RDL	Qualifier	Dilution Factor
Volatile Organics in Air by SIM - Mansfield Lab						
1,1,1-Trichloroethane	ND	0.020	ND	0.109		1
1,1,2-Trichloroethane	ND	0.020	ND	0.109		1
1,1-Dichloroethane	ND	0.020	ND	0.081		1
1,1-Dichloroethene	ND	0.020	ND	0.079		1
1,2,4-Trimethylbenzene	ND	0.020	ND	0.098		1
1,2-Dibromoethane	ND	0.020	ND	0.154		1
1,2-Dichloroethane	ND	0.020	ND	0.081		1
1,2-Dichloropropane	ND	0.020	ND	0.092		1
1,3-Butadiene	ND	0.020	ND	0.044		1
1,3-Dichlorobenzene	ND	0.020	ND	0.120		1
1,4-Dichlorobenzene	ND	0.020	ND	0.120		1
Benzene	ND	0.070	ND	0.223		1
Bromodichloromethane	ND	0.020	ND	0.134		1
Bromoform	ND	0.020	ND	0.206		1
Carbon tetrachloride	ND	0.020	ND	0.126		1
Chlorobenzene	ND	0.020	ND	0.092		1
Chloroform	ND	0.020	ND	0.098		1
cis-1,2-Dichloroethene	ND	0.020	ND	0.079		1
Ethylbenzene	ND	0.020	ND	0.087		1
Methylene chloride	ND	0.500	ND	1.74		1
Methyl tert butyl ether	ND	0.020	ND	0.072		1
Naphthalene	ND	0.050	ND	0.262		1
Xylenes, Total	ND	0.060	ND	0.260		1
Tetrachloroethene	ND	0.020	ND	0.136		1
Toluene	ND	0.050	ND	0.188		1

Project Name: UNIFIRST PROPERTY IA / VI

Project Number: 1-2114-2

Lab Number: L1004721

Report Date: 04/10/10

SAMPLE RESULTS

Lab ID: L1004721-20
Client ID: CAN 695 FC 290
Sample Location: WOBURN, MA

Date Collected: 04/02/10 00:00
Date Received: 04/03/10
Field Prep: Not Specified

Parameter	ppbV Results	ppbV RDL	ug/m3 Results	ug/m3 RDL	Qualifier	Dilution Factor
Volatile Organics in Air by SIM - Mansfield Lab						
trans-1,2-Dichloroethene	ND	0.020	ND	0.079		1
trans-1,3-Dichloropropene	ND	0.020	ND	0.091		1
Trichloroethene	ND	0.020	ND	0.107		1
Vinyl chloride	ND	0.020	ND	0.051		1
Isopropylbenzene	ND	0.500	ND	2.46		1

Project Name: UNIFIRST PROPERTY IA / VI
Project Number: 1-2114-2

Lab Number: L1004721
Report Date: 04/10/10

SAMPLE RESULTS

Lab ID: L1004721-21
Client ID: CAN 609 FC 183
Sample Location: WOBURN, MA
Matrix: Air
Anaytical Method: 48,TO-15-SIM
Analytical Date: 04/06/10 21:23
Analyst: AJ

Date Collected: 04/02/10 00:00
Date Received: 04/03/10
Field Prep: Not Specified

Parameter	ppbV Results	ppbV RDL	ug/m3 Results	ug/m3 RDL	Qualifier	Dilution Factor
Volatile Organics in Air by SIM - Mansfield Lab						
1,1,1-Trichloroethane	ND	0.020	ND	0.109		1
1,1,2-Trichloroethane	ND	0.020	ND	0.109		1
1,1-Dichloroethane	ND	0.020	ND	0.081		1
1,1-Dichloroethene	ND	0.020	ND	0.079		1
1,2,4-Trimethylbenzene	ND	0.020	ND	0.098		1
1,2-Dibromoethane	ND	0.020	ND	0.154		1
1,2-Dichloroethane	ND	0.020	ND	0.081		1
1,2-Dichloropropane	ND	0.020	ND	0.092		1
1,3-Butadiene	ND	0.020	ND	0.044		1
1,3-Dichlorobenzene	ND	0.020	ND	0.120		1
1,4-Dichlorobenzene	ND	0.020	ND	0.120		1
Benzene	ND	0.070	ND	0.223		1
Bromodichloromethane	ND	0.020	ND	0.134		1
Bromoform	ND	0.020	ND	0.206		1
Carbon tetrachloride	ND	0.020	ND	0.126		1
Chlorobenzene	ND	0.020	ND	0.092		1
Chloroform	ND	0.020	ND	0.098		1
cis-1,2-Dichloroethene	ND	0.020	ND	0.079		1
Ethylbenzene	ND	0.020	ND	0.087		1
Methylene chloride	ND	0.500	ND	1.74		1
Methyl tert butyl ether	ND	0.020	ND	0.072		1
Naphthalene	ND	0.050	ND	0.262		1
Xylenes, Total	ND	0.060	ND	0.260		1
Tetrachloroethene	ND	0.020	ND	0.136		1
Toluene	ND	0.050	ND	0.188		1

Project Name: UNIFIRST PROPERTY IA / VI

Project Number: 1-2114-2

Lab Number: L1004721

Report Date: 04/10/10

SAMPLE RESULTS

Lab ID: L1004721-21
Client ID: CAN 609 FC 183
Sample Location: WOBURN, MA

Date Collected: 04/02/10 00:00
Date Received: 04/03/10
Field Prep: Not Specified

Parameter	ppbV Results	ppbV RDL	ug/m3 Results	ug/m3 RDL	Qualifier	Dilution Factor
Volatile Organics in Air by SIM - Mansfield Lab						
trans-1,2-Dichloroethene	ND	0.020	ND	0.079		1
trans-1,3-Dichloropropene	ND	0.020	ND	0.091		1
Trichloroethene	ND	0.020	ND	0.107		1
Vinyl chloride	ND	0.020	ND	0.051		1
Isopropylbenzene	ND	0.500	ND	2.46		1

Project Name: UNIFIRST PROPERTY IA / VI

Project Number: 1-2114-2

Lab Number: L1004721

Report Date: 04/10/10

SAMPLE RESULTS

Lab ID: L1004721-22
Client ID: CAN 1676 FC 205
Sample Location: WOBURN, MA
Matrix: Air
Anaytical Method: 48,TO-15-SIM
Analytical Date: 04/06/10 21:56
Analyst: AJ

Date Collected: 04/02/10 00:00
Date Received: 04/03/10
Field Prep: Not Specified

Parameter	ppbV Results	ppbV RDL	ug/m3 Results	ug/m3 RDL	Qualifier	Dilution Factor
Volatile Organics in Air by SIM - Mansfield Lab						
1,1,1-Trichloroethane	ND	0.020	ND	0.109		1
1,1,2-Trichloroethane	ND	0.020	ND	0.109		1
1,1-Dichloroethane	ND	0.020	ND	0.081		1
1,1-Dichloroethene	ND	0.020	ND	0.079		1
1,2,4-Trimethylbenzene	ND	0.020	ND	0.098		1
1,2-Dibromoethane	ND	0.020	ND	0.154		1
1,2-Dichloroethane	ND	0.020	ND	0.081		1
1,2-Dichloropropane	ND	0.020	ND	0.092		1
1,3-Butadiene	ND	0.020	ND	0.044		1
1,3-Dichlorobenzene	ND	0.020	ND	0.120		1
1,4-Dichlorobenzene	ND	0.020	ND	0.120		1
Benzene	ND	0.070	ND	0.223		1
Bromodichloromethane	ND	0.020	ND	0.134		1
Bromoform	ND	0.020	ND	0.206		1
Carbon tetrachloride	ND	0.020	ND	0.126		1
Chlorobenzene	ND	0.020	ND	0.092		1
Chloroform	ND	0.020	ND	0.098		1
cis-1,2-Dichloroethene	ND	0.020	ND	0.079		1
Ethylbenzene	ND	0.020	ND	0.087		1
Methylene chloride	ND	0.500	ND	1.74		1
Methyl tert butyl ether	ND	0.020	ND	0.072		1
Naphthalene	ND	0.050	ND	0.262		1
Xylenes, Total	ND	0.060	ND	0.260		1
Tetrachloroethene	ND	0.020	ND	0.136		1
Toluene	ND	0.050	ND	0.188		1

Project Name: UNIFIRST PROPERTY IA / VI

Project Number: 1-2114-2

Lab Number: L1004721

Report Date: 04/10/10

SAMPLE RESULTS

Lab ID: L1004721-22
Client ID: CAN 1676 FC 205
Sample Location: WOBURN, MA

Date Collected: 04/02/10 00:00
Date Received: 04/03/10
Field Prep: Not Specified

Parameter	ppbV Results	ppbV RDL	ug/m3 Results	ug/m3 RDL	Qualifier	Dilution Factor
Volatile Organics in Air by SIM - Mansfield Lab						
trans-1,2-Dichloroethene	ND	0.020	ND	0.079		1
trans-1,3-Dichloropropene	ND	0.020	ND	0.091		1
Trichloroethene	ND	0.020	ND	0.107		1
Vinyl chloride	ND	0.020	ND	0.051		1
Isopropylbenzene	ND	0.500	ND	2.46		1

Project Name: UNIFIRST PROPERTY IA / VI
Project Number: 1-2114-2

Lab Number: L1004721
Report Date: 04/10/10

SAMPLE RESULTS

Lab ID: L1004721-23
Client ID: CAN 986 FC 406
Sample Location: WOBURN, MA
Matrix: Air
Anaytical Method: 48,TO-15-SIM
Analytical Date: 04/06/10 22:31
Analyst: AJ

Date Collected: 04/02/10 00:00
Date Received: 04/03/10
Field Prep: Not Specified

Parameter	ppbV Results	ppbV RDL	ug/m3 Results	ug/m3 RDL	Qualifier	Dilution Factor
Volatile Organics in Air by SIM - Mansfield Lab						
1,1,1-Trichloroethane	ND	0.020	ND	0.109		1
1,1,2-Trichloroethane	ND	0.020	ND	0.109		1
1,1-Dichloroethane	ND	0.020	ND	0.081		1
1,1-Dichloroethene	ND	0.020	ND	0.079		1
1,2,4-Trimethylbenzene	ND	0.020	ND	0.098		1
1,2-Dibromoethane	ND	0.020	ND	0.154		1
1,2-Dichloroethane	ND	0.020	ND	0.081		1
1,2-Dichloropropane	ND	0.020	ND	0.092		1
1,3-Butadiene	ND	0.020	ND	0.044		1
1,3-Dichlorobenzene	ND	0.020	ND	0.120		1
1,4-Dichlorobenzene	ND	0.020	ND	0.120		1
Benzene	ND	0.070	ND	0.223		1
Bromodichloromethane	ND	0.020	ND	0.134		1
Bromoform	ND	0.020	ND	0.206		1
Carbon tetrachloride	ND	0.020	ND	0.126		1
Chlorobenzene	ND	0.020	ND	0.092		1
Chloroform	ND	0.020	ND	0.098		1
cis-1,2-Dichloroethene	ND	0.020	ND	0.079		1
Ethylbenzene	ND	0.020	ND	0.087		1
Methylene chloride	ND	0.500	ND	1.74		1
Methyl tert butyl ether	ND	0.020	ND	0.072		1
Naphthalene	ND	0.050	ND	0.262		1
Xylenes, Total	ND	0.060	ND	0.260		1
Tetrachloroethene	ND	0.020	ND	0.136		1
Toluene	ND	0.050	ND	0.188		1

Project Name: UNIFIRST PROPERTY IA / VI

Project Number: 1-2114-2

Lab Number: L1004721

Report Date: 04/10/10

SAMPLE RESULTS

Lab ID: L1004721-23
Client ID: CAN 986 FC 406
Sample Location: WOBURN, MA

Date Collected: 04/02/10 00:00
Date Received: 04/03/10
Field Prep: Not Specified

Parameter	ppbV Results	ppbV RDL	ug/m3 Results	ug/m3 RDL	Qualifier	Dilution Factor
Volatile Organics in Air by SIM - Mansfield Lab						
trans-1,2-Dichloroethene	ND	0.020	ND	0.079		1
trans-1,3-Dichloropropene	ND	0.020	ND	0.091		1
Trichloroethene	ND	0.020	ND	0.107		1
Vinyl chloride	ND	0.020	ND	0.051		1
Isopropylbenzene	ND	0.500	ND	2.46		1

Project Name: UNIFIRST PROPERTY IA / VI

Project Number: 1-2114-2

Lab Number: L1004721

Report Date: 04/10/10

SAMPLE RESULTS

Lab ID: L1004721-24
Client ID: CAN 1704 FC 369
Sample Location: WOBURN, MA
Matrix: Air
Anaytical Method: 48,TO-15-SIM
Analytical Date: 04/06/10 23:06
Analyst: AJ

Date Collected: 04/02/10 00:00
Date Received: 04/03/10
Field Prep: Not Specified

Parameter	ppbV Results	ppbV RDL	ug/m3 Results	ug/m3 RDL	Qualifier	Dilution Factor
Volatile Organics in Air by SIM - Mansfield Lab						
1,1,1-Trichloroethane	ND	0.020	ND	0.109		1
1,1,2-Trichloroethane	ND	0.020	ND	0.109		1
1,1-Dichloroethane	ND	0.020	ND	0.081		1
1,1-Dichloroethene	ND	0.020	ND	0.079		1
1,2,4-Trimethylbenzene	ND	0.020	ND	0.098		1
1,2-Dibromoethane	ND	0.020	ND	0.154		1
1,2-Dichloroethane	ND	0.020	ND	0.081		1
1,2-Dichloropropane	ND	0.020	ND	0.092		1
1,3-Butadiene	ND	0.020	ND	0.044		1
1,3-Dichlorobenzene	ND	0.020	ND	0.120		1
1,4-Dichlorobenzene	ND	0.020	ND	0.120		1
Benzene	ND	0.070	ND	0.223		1
Bromodichloromethane	ND	0.020	ND	0.134		1
Bromoform	ND	0.020	ND	0.206		1
Carbon tetrachloride	ND	0.020	ND	0.126		1
Chlorobenzene	ND	0.020	ND	0.092		1
Chloroform	ND	0.020	ND	0.098		1
cis-1,2-Dichloroethene	ND	0.020	ND	0.079		1
Ethylbenzene	ND	0.020	ND	0.087		1
Methylene chloride	ND	0.500	ND	1.74		1
Methyl tert butyl ether	ND	0.020	ND	0.072		1
Naphthalene	ND	0.050	ND	0.262		1
Xylenes, Total	ND	0.060	ND	0.260		1
Tetrachloroethene	ND	0.020	ND	0.136		1
Toluene	ND	0.050	ND	0.188		1

Project Name: UNIFIRST PROPERTY IA / VI

Project Number: 1-2114-2

Lab Number: L1004721

Report Date: 04/10/10

SAMPLE RESULTS

Lab ID: L1004721-24
Client ID: CAN 1704 FC 369
Sample Location: WOBURN, MA

Date Collected: 04/02/10 00:00
Date Received: 04/03/10
Field Prep: Not Specified

Parameter	ppbV Results	ppbV RDL	ug/m3 Results	ug/m3 RDL	Qualifier	Dilution Factor
Volatile Organics in Air by SIM - Mansfield Lab						
trans-1,2-Dichloroethene	ND	0.020	ND	0.079		1
trans-1,3-Dichloropropene	ND	0.020	ND	0.091		1
Trichloroethene	ND	0.020	ND	0.107		1
Vinyl chloride	ND	0.020	ND	0.051		1
Isopropylbenzene	ND	0.500	ND	2.46		1

Project Name: UNIFIRST PROPERTY IA / VI
Project Number: 1-2114-2

Lab Number: L1004721
Report Date: 04/10/10

SAMPLE RESULTS

Lab ID: L1004721-25
Client ID: CAN 949 FC 242
Sample Location: WOBURN, MA
Matrix: Air
Anaytical Method: 48,TO-15-SIM
Analytical Date: 04/06/10 23:43
Analyst: AJ

Date Collected: 04/02/10 00:00
Date Received: 04/03/10
Field Prep: Not Specified

Parameter	ppbV Results	ppbV RDL	ug/m3 Results	ug/m3 RDL	Qualifier	Dilution Factor
Volatile Organics in Air by SIM - Mansfield Lab						
1,1,1-Trichloroethane	ND	0.020	ND	0.109		1
1,1,2-Trichloroethane	ND	0.020	ND	0.109		1
1,1-Dichloroethane	ND	0.020	ND	0.081		1
1,1-Dichloroethene	ND	0.020	ND	0.079		1
1,2,4-Trimethylbenzene	ND	0.020	ND	0.098		1
1,2-Dibromoethane	ND	0.020	ND	0.154		1
1,2-Dichloroethane	ND	0.020	ND	0.081		1
1,2-Dichloropropane	ND	0.020	ND	0.092		1
1,3-Butadiene	ND	0.020	ND	0.044		1
1,3-Dichlorobenzene	ND	0.020	ND	0.120		1
1,4-Dichlorobenzene	ND	0.020	ND	0.120		1
Benzene	ND	0.070	ND	0.223		1
Bromodichloromethane	ND	0.020	ND	0.134		1
Bromoform	ND	0.020	ND	0.206		1
Carbon tetrachloride	ND	0.020	ND	0.126		1
Chlorobenzene	ND	0.020	ND	0.092		1
Chloroform	ND	0.020	ND	0.098		1
cis-1,2-Dichloroethene	ND	0.020	ND	0.079		1
Ethylbenzene	ND	0.020	ND	0.087		1
Methylene chloride	ND	0.500	ND	1.74		1
Methyl tert butyl ether	ND	0.020	ND	0.072		1
Naphthalene	ND	0.050	ND	0.262		1
Xylenes, Total	ND	0.060	ND	0.260		1
Tetrachloroethene	ND	0.020	ND	0.136		1
Toluene	ND	0.050	ND	0.188		1

Project Name: UNIFIRST PROPERTY IA / VI

Project Number: 1-2114-2

Lab Number: L1004721

Report Date: 04/10/10

SAMPLE RESULTS

Lab ID: L1004721-25
Client ID: CAN 949 FC 242
Sample Location: WOBURN, MA

Date Collected: 04/02/10 00:00
Date Received: 04/03/10
Field Prep: Not Specified

Parameter	ppbV Results	ppbV RDL	ug/m3 Results	ug/m3 RDL	Qualifier	Dilution Factor
Volatile Organics in Air by SIM - Mansfield Lab						
trans-1,2-Dichloroethene	ND	0.020	ND	0.079		1
trans-1,3-Dichloropropene	ND	0.020	ND	0.091		1
Trichloroethene	ND	0.020	ND	0.107		1
Vinyl chloride	ND	0.020	ND	0.051		1
Isopropylbenzene	ND	0.500	ND	2.46		1

Project Name: UNIFIRST PROPERTY IA / VI **Lab Number:** L1004721

Project Number: 1-2114-2 **Report Date:** 04/10/10

Method Blank Analysis
Batch Quality Control

Analytical Method: 48,TO-15-SIM
Analytical Date: 04/05/10 17:49

Parameter	ppbV Results	ppbV RDL	ug/m3 Results	ug/m3 RDL	Qualifier	Dilution Factor
Volatile Organics in Air by SIM - Mansfield Lab for sample(s): 01,03-13 Batch: WG406829-4						
1,1,1-Trichloroethane	ND	0.020	ND	0.109		1
1,1,2-Trichloroethane	ND	0.020	ND	0.109		1
1,1-Dichloroethane	ND	0.020	ND	0.081		1
1,1-Dichloroethene	ND	0.020	ND	0.079		1
1,2,4-Trimethylbenzene	ND	0.020	ND	0.098		1
1,2-Dibromoethane	ND	0.020	ND	0.154		1
1,2-Dichloroethane	ND	0.020	ND	0.081		1
1,2-Dichloropropane	ND	0.020	ND	0.092		1
1,3-Butadiene	ND	0.020	ND	0.044		1
1,3-Dichlorobenzene	ND	0.020	ND	0.120		1
1,4-Dichlorobenzene	ND	0.020	ND	0.120		1
Benzene	ND	0.070	ND	0.223		1
Bromodichloromethane	ND	0.020	ND	0.134		1
Bromoform	ND	0.020	ND	0.206		1
Carbon tetrachloride	ND	0.020	ND	0.126		1
Chlorobenzene	ND	0.020	ND	0.092		1
Chloroform	ND	0.020	ND	0.098		1
cis-1,2-Dichloroethene	ND	0.020	ND	0.079		1
Ethylbenzene	ND	0.020	ND	0.087		1
Methylene chloride	ND	0.500	ND	1.74		1
Methyl tert butyl ether	ND	0.020	ND	0.072		1
Naphthalene	ND	0.050	ND	0.262		1
Xylenes, Total	ND	0.060	ND	0.260		1
Tetrachloroethene	ND	0.020	ND	0.136		1
Toluene	ND	0.050	ND	0.188		1

Project Name: UNIFIRST PROPERTY IA / VI

Project Number: 1-2114-2

Lab Number: L1004721

Report Date: 04/10/10

Method Blank Analysis
Batch Quality Control

Analytical Method: 48,TO-15-SIM
Analytical Date: 04/05/10 17:49

Parameter	ppbV Results	ppbV RDL	ug/m3 Results	ug/m3 RDL	Qualifier	Dilution Factor
Volatile Organics in Air by SIM - Mansfield Lab for sample(s): 01,03-13 Batch: WG406829-4						
trans-1,2-Dichloroethene	ND	0.020	ND	0.079		1
trans-1,3-Dichloropropene	ND	0.020	ND	0.091		1
Trichloroethene	ND	0.020	ND	0.107		1
Vinyl chloride	ND	0.020	ND	0.051		1
Isopropylbenzene	ND	0.500	ND	2.46		1

Project Name: UNIFIRST PROPERTY IA / VI

Project Number: 1-2114-2

Lab Number: L1004721

Report Date: 04/10/10

Method Blank Analysis
Batch Quality Control

Analytical Method: 48,TO-15-SIM
Analytical Date: 04/06/10 16:42

Parameter	ppbV Results	ppbV RDL	ug/m3 Results	ug/m3 RDL	Qualifier	Dilution Factor
Volatile Organics in Air by SIM - Mansfield Lab for sample(s): 14-25 Batch: WG407057-4						
1,1,1-Trichloroethane	ND	0.020	ND	0.109		1
1,1,2-Trichloroethane	ND	0.020	ND	0.109		1
1,1-Dichloroethane	ND	0.020	ND	0.081		1
1,1-Dichloroethene	ND	0.020	ND	0.079		1
1,2,4-Trimethylbenzene	ND	0.020	ND	0.098		1
1,2-Dibromoethane	ND	0.020	ND	0.154		1
1,2-Dichloroethane	ND	0.020	ND	0.081		1
1,2-Dichloropropane	ND	0.020	ND	0.092		1
1,3-Butadiene	ND	0.020	ND	0.044		1
1,3-Dichlorobenzene	ND	0.020	ND	0.120		1
1,4-Dichlorobenzene	ND	0.020	ND	0.120		1
Benzene	ND	0.070	ND	0.223		1
Bromodichloromethane	ND	0.020	ND	0.134		1
Bromoform	ND	0.020	ND	0.206		1
Carbon tetrachloride	ND	0.020	ND	0.126		1
Chlorobenzene	ND	0.020	ND	0.092		1
Chloroform	ND	0.020	ND	0.098		1
cis-1,2-Dichloroethene	ND	0.020	ND	0.079		1
Ethylbenzene	ND	0.020	ND	0.087		1
Methylene chloride	ND	0.500	ND	1.74		1
Methyl tert butyl ether	ND	0.020	ND	0.072		1
Naphthalene	ND	0.050	ND	0.262		1
Xylenes, Total	ND	0.060	ND	0.260		1
Tetrachloroethene	ND	0.020	ND	0.136		1
Toluene	ND	0.050	ND	0.188		1

Project Name: UNIFIRST PROPERTY IA / VI

Project Number: 1-2114-2

Lab Number: L1004721

Report Date: 04/10/10

Method Blank Analysis
Batch Quality Control

Analytical Method: 48,TO-15-SIM
Analytical Date: 04/06/10 16:42

Parameter	ppbV Results	ppbV RDL	ug/m3 Results	ug/m3 RDL	Qualifier	Dilution Factor
Volatile Organics in Air by SIM - Mansfield Lab for sample(s): 14-25 Batch: WG407057-4						
trans-1,2-Dichloroethene	ND	0.020	ND	0.079		1
trans-1,3-Dichloropropene	ND	0.020	ND	0.091		1
Trichloroethene	ND	0.020	ND	0.107		1
Vinyl chloride	ND	0.020	ND	0.051		1
Isopropylbenzene	ND	0.500	ND	2.46		1

Lab Control Sample Analysis
Batch Quality Control

Project Name: UNIFIRST PROPERTY IA / VI

Project Number: 1-2114-2

Lab Number: L1004721

Report Date: 04/10/10

Parameter	LCS %Recovery	Qual	LCSD %Recovery	Qual	%Recovery Limits	RPD	Qual	RPD Limits
Volatile Organics in Air by SIM - Mansfield Lab Associated sample(s): 01,03-13 Batch: WG406829-3								
1,1,1-Trichloroethane	100		-		70-130	-		25
1,1,2-Trichloroethane	95		-		70-130	-		25
1,1-Dichloroethane	92		-		70-130	-		25
1,1-Dichloroethene	88		-		70-130	-		25
1,2,4-Trimethylbenzene	105		-		70-130	-		25
1,2-Dibromoethane	101		-		70-130	-		25
1,2-Dichloroethane	83		-		70-130	-		25
1,2-Dichloropropane	91		-		70-130	-		25
1,3-Butadiene	102		-		70-130	-		25
1,3-Dichlorobenzene	108		-		70-130	-		25
1,4-Dichlorobenzene	110		-		70-130	-		25
Benzene	90		-		70-130	-		25
Bromodichloromethane	96		-		70-130	-		25
Bromoform	110		-		70-130	-		25
Carbon tetrachloride	109		-		70-130	-		25
Chlorobenzene	102		-		70-130	-		25
Chloroform	92		-		70-130	-		25
cis-1,2-Dichloroethene	95		-		70-130	-		25
Ethylbenzene	97		-		70-130	-		25
Methylene chloride	81		-		70-130	-		25
Methyl tert butyl ether	88		-		70-130	-		25

Lab Control Sample Analysis
Batch Quality Control

Project Name: UNIFIRST PROPERTY IA / VI
Project Number: 1-2114-2

Lab Number: L1004721
Report Date: 04/10/10

Parameter	LCS %Recovery	Qual	LCSD %Recovery	Qual	%Recovery Limits	RPD	Qual	RPD Limits
Volatile Organics in Air by SIM - Mansfield Lab Associated sample(s): 01,03-13 Batch: WG406829-3								
Naphthalene	94		-		70-130	-		25
XYLENE (TOTAL)	99		-		70-130	-		25
Tetrachloroethene	100		-		70-130	-		25
Toluene	93		-		70-130	-		25
trans-1,2-Dichloroethene	93		-		70-130	-		25
trans-1,3-Dichloropropene	90		-		70-130	-		25
Trichloroethene	97		-		70-130	-		25
Vinyl chloride	95		-		70-130	-		25
Isopropylbenzene	94		-		70-130	-		25
Volatile Organics in Air by SIM - Mansfield Lab Associated sample(s): 14-25 Batch: WG407057-3								
1,1,1-Trichloroethane	109		-		70-130	-		25
1,1,2-Trichloroethane	88		-		70-130	-		25
1,1-Dichloroethane	83		-		70-130	-		25
1,1-Dichloroethene	91		-		70-130	-		25
1,2,4-Trimethylbenzene	90		-		70-130	-		25
1,2-Dibromoethane	91		-		70-130	-		25
1,2-Dichloroethane	90		-		70-130	-		25
1,2-Dichloropropane	79		-		70-130	-		25
1,3-Butadiene	91		-		70-130	-		25

Lab Control Sample Analysis
Batch Quality Control

Project Name: UNIFIRST PROPERTY IA / VI
Project Number: 1-2114-2

Lab Number: L1004721
Report Date: 04/10/10

Parameter	LCS %Recovery	Qual	LCSD %Recovery	Qual	%Recovery Limits	RPD	Qual	RPD Limits
Volatile Organics in Air by SIM - Mansfield Lab Associated sample(s): 14-25 Batch: WG407057-3								
1,3-Dichlorobenzene	101		-		70-130	-		25
1,4-Dichlorobenzene	102		-		70-130	-		25
Benzene	85		-		70-130	-		25
Bromodichloromethane	88		-		70-130	-		25
Bromoform	100		-		70-130	-		25
Carbon tetrachloride	96		-		70-130	-		25
Chlorobenzene	90		-		70-130	-		25
Chloroform	92		-		70-130	-		25
cis-1,2-Dichloroethene	86		-		70-130	-		25
Ethylbenzene	79		-		70-130	-		25
Methylene chloride	86		-		70-130	-		25
Methyl tert butyl ether	76		-		70-130	-		25
Naphthalene	103		-		70-130	-		25
XYLENE (TOTAL)	81		-		70-130	-		25
Tetrachloroethene	93		-		70-130	-		25
Toluene	79		-		70-130	-		25
trans-1,2-Dichloroethene	86		-		70-130	-		25
trans-1,3-Dichloropropene	78		-		70-130	-		25
Trichloroethene	91		-		70-130	-		25
Vinyl chloride	89		-		70-130	-		25
Isopropylbenzene	79		-		70-130	-		25

Lab Control Sample Analysis

Batch Quality Control

Project Name: UNIFIRST PROPERTY IA / VI

Project Number: 1-2114-2

Lab Number: L1004721

Report Date: 04/10/10

Parameter	LCS %Recovery	Qual	LCSD %Recovery	Qual	%Recovery Limits	RPD	Qual	RPD Limits
Volatile Organics in Air by SIM - Mansfield Lab Associated sample(s): 14-25 Batch: WG407057-3								

Project Name: UNIFIRST PROPERTY IA / VI **Lab Number:** L1004721

Project Number: 1-2114-2 **Report Date:** 04/10/10

SAMPLE RESULTS

Lab ID:	L1004721-01	Date Collected:	04/02/10 00:00
Client ID:	CAN 785 FC 298	Date Received:	04/03/10
Sample Location:	WOBURN, MA	Field Prep:	Not Specified
Matrix:	Air		
Analytical Method:	96,APH		
Analytical Date:	04/06/10 08:08		
Analyst:	RY		

Quality Control Information

Sample Type:	10 ml/min Composite
Sample Container Type:	Canister - 6 Liter
Sampling Flow Controller:	Mechanical
Sampling Zone:	Unknown
Sampling Flow Meter RPD of pre & post-sampling calibration check:	<=20%
Were all QA/QC procedures REQUIRED by the method followed?	Yes
Were all performance/acceptance standards for the required procedures achieved?	Yes
Were significant modifications made to the method as specified in Sect 11.1.2?	No

Parameter	Result	Qualifier	Units	RDL	Dilution Factor
Petroleum Hydrocarbons in Air - Mansfield Lab					
1,3-Butadiene	ND		ug/m3	2.0	1
Methyl tert butyl ether	ND		ug/m3	2.0	1
Benzene	ND		ug/m3	2.0	1
Toluene	ND		ug/m3	2.0	1
Ethylbenzene	ND		ug/m3	2.0	1
p/m-Xylene	ND		ug/m3	4.0	1
o-Xylene	ND		ug/m3	2.0	1
Naphthalene	ND		ug/m3	2.0	1
C5-C8 Aliphatics, Adjusted	ND		ug/m3	12	1
C9-C12 Aliphatics, Adjusted	ND		ug/m3	14	1
C9-C10 Aromatics	ND		ug/m3	10	1

Project Name: UNIFIRST PROPERTY IA / VI **Lab Number:** L1004721

Project Number: 1-2114-2 **Report Date:** 04/10/10

SAMPLE RESULTS

Lab ID:	L1004721-03	Date Collected:	04/02/10 00:00
Client ID:	CAN 1559 FC 074	Date Received:	04/03/10
Sample Location:	WOBURN, MA	Field Prep:	Not Specified
Matrix:	Air		
Analytical Method:	96,APH		
Analytical Date:	04/05/10 21:34		
Analyst:	RY		

Quality Control Information

Sample Type:	10 ml/min Composite
Sample Container Type:	Canister - 6 Liter
Sampling Flow Controller:	Mechanical
Sampling Zone:	Unknown
Sampling Flow Meter RPD of pre & post-sampling calibration check:	<=20%
Were all QA/QC procedures REQUIRED by the method followed?	Yes
Were all performance/acceptance standards for the required procedures achieved?	Yes
Were significant modifications made to the method as specified in Sect 11.1.2?	No

Parameter	Result	Qualifier	Units	RDL	Dilution Factor
Petroleum Hydrocarbons in Air - Mansfield Lab					
1,3-Butadiene	ND		ug/m3	2.0	1
Methyl tert butyl ether	ND		ug/m3	2.0	1
Benzene	ND		ug/m3	2.0	1
Toluene	ND		ug/m3	2.0	1
Ethylbenzene	ND		ug/m3	2.0	1
p/m-Xylene	ND		ug/m3	4.0	1
o-Xylene	ND		ug/m3	2.0	1
Naphthalene	ND		ug/m3	2.0	1
C5-C8 Aliphatics, Adjusted	ND		ug/m3	12	1
C9-C12 Aliphatics, Adjusted	ND		ug/m3	14	1
C9-C10 Aromatics	ND		ug/m3	10	1

Project Name:	UNIFIRST PROPERTY IA / VI	**Lab Number:**	L1004721
Project Number:	1-2114-2	**Report Date:**	04/10/10

SAMPLE RESULTS

Lab ID:	L1004721-04	Date Collected:	04/02/10 00:00
Client ID:	CAN 945 FC 256	Date Received:	04/03/10
Sample Location:	WOBURN, MA	Field Prep:	Not Specified
Matrix:	Air		
Analytical Method:	96,APH		
Analytical Date:	04/05/10 22:10		
Analyst:	RY		

Quality Control Information

Sample Type:	10 ml/min Composite
Sample Container Type:	Canister - 6 Liter
Sampling Flow Controller:	Mechanical
Sampling Zone:	Unknown
Sampling Flow Meter RPD of pre & post-sampling calibration check:	<=20%
Were all QA/QC procedures REQUIRED by the method followed?	Yes
Were all performance/acceptance standards for the required procedures achieved?	Yes
Were significant modifications made to the method as specified in Sect 11.1.2?	No

Parameter	Result	Qualifier	Units	RDL	Dilution Factor
Petroleum Hydrocarbons in Air - Mansfield Lab					
1,3-Butadiene	ND		ug/m3	2.0	1
Methyl tert butyl ether	ND		ug/m3	2.0	1
Benzene	ND		ug/m3	2.0	1
Toluene	ND		ug/m3	2.0	1
Ethylbenzene	ND		ug/m3	2.0	1
p/m-Xylene	ND		ug/m3	4.0	1
o-Xylene	ND		ug/m3	2.0	1
Naphthalene	ND		ug/m3	2.0	1
C5-C8 Aliphatics, Adjusted	ND		ug/m3	12	1
C9-C12 Aliphatics, Adjusted	ND		ug/m3	14	1
C9-C10 Aromatics	ND		ug/m3	10	1

Project Name: UNIFIRST PROPERTY IA / VI **Lab Number:** L1004721

Project Number: 1-2114-2 **Report Date:** 04/10/10

SAMPLE RESULTS

Lab ID:	L1004721-05	Date Collected:	04/02/10 00:00
Client ID:	CAN 762 FC 233	Date Received:	04/03/10
Sample Location:	WOBURN, MA	Field Prep:	Not Specified
Matrix:	Air		
Analytical Method:	96,APH		
Analytical Date:	04/05/10 22:46		
Analyst:	RY		

Quality Control Information

Sample Type:	10 ml/min Composite
Sample Container Type:	Canister - 6 Liter
Sampling Flow Controller:	Mechanical
Sampling Zone:	Unknown
Sampling Flow Meter RPD of pre & post-sampling calibration check:	<=20%
Were all QA/QC procedures REQUIRED by the method followed?	Yes
Were all performance/acceptance standards for the required procedures achieved?	Yes
Were significant modifications made to the method as specified in Sect 11.1.2?	No

Parameter	Result	Qualifier	Units	RDL	Dilution Factor
Petroleum Hydrocarbons in Air - Mansfield Lab					
1,3-Butadiene	ND		ug/m3	2.0	1
Methyl tert butyl ether	ND		ug/m3	2.0	1
Benzene	ND		ug/m3	2.0	1
Toluene	ND		ug/m3	2.0	1
Ethylbenzene	ND		ug/m3	2.0	1
p/m-Xylene	ND		ug/m3	4.0	1
o-Xylene	ND		ug/m3	2.0	1
Naphthalene	ND		ug/m3	2.0	1
C5-C8 Aliphatics, Adjusted	ND		ug/m3	12	1
C9-C12 Aliphatics, Adjusted	ND		ug/m3	14	1
C9-C10 Aromatics	ND		ug/m3	10	1

Project Name: UNIFIRST PROPERTY IA / VI **Lab Number:** L1004721

Project Number: 1-2114-2 **Report Date:** 04/10/10

SAMPLE RESULTS

Lab ID:	L1004721-06	Date Collected:	04/02/10 00:00
Client ID:	CAN 1707 FC 356	Date Received:	04/03/10
Sample Location:	WOBURN, MA	Field Prep:	Not Specified
Matrix:	Air		
Analytical Method:	96,APH		
Analytical Date:	04/05/10 23:21		
Analyst:	RY		

Quality Control Information

Sample Type:	10 ml/min Composite
Sample Container Type:	Canister - 6 Liter
Sampling Flow Controller:	Mechanical
Sampling Zone:	Unknown
Sampling Flow Meter RPD of pre & post-sampling calibration check:	<=20%
Were all QA/QC procedures REQUIRED by the method followed?	Yes
Were all performance/acceptance standards for the required procedures achieved?	Yes
Were significant modifications made to the method as specified in Sect 11.1.2?	No

Parameter	Result	Qualifier	Units	RDL	Dilution Factor
Petroleum Hydrocarbons in Air - Mansfield Lab					
1,3-Butadiene	ND		ug/m3	2.0	1
Methyl tert butyl ether	ND		ug/m3	2.0	1
Benzene	ND		ug/m3	2.0	1
Toluene	ND		ug/m3	2.0	1
Ethylbenzene	ND		ug/m3	2.0	1
p/m-Xylene	ND		ug/m3	4.0	1
o-Xylene	ND		ug/m3	2.0	1
Naphthalene	ND		ug/m3	2.0	1
C5-C8 Aliphatics, Adjusted	ND		ug/m3	12	1
C9-C12 Aliphatics, Adjusted	ND		ug/m3	14	1
C9-C10 Aromatics	ND		ug/m3	10	1

Project Name: UNIFIRST PROPERTY IA / VI **Lab Number:** L1004721

Project Number: 1-2114-2 **Report Date:** 04/10/10

SAMPLE RESULTS

Lab ID:	L1004721-07	Date Collected:	04/02/10 00:00
Client ID:	CAN 983 FC 349	Date Received:	04/03/10
Sample Location:	WOBURN, MA	Field Prep:	Not Specified
Matrix:	Air		
Analytical Method:	96,APH		
Analytical Date:	04/05/10 23:58		
Analyst:	RY		

Quality Control Information

Sample Type:	10 ml/min Composite
Sample Container Type:	Canister - 6 Liter
Sampling Flow Controller:	Mechanical
Sampling Zone:	Unknown
Sampling Flow Meter RPD of pre & post-sampling calibration check:	<=20%
Were all QA/QC procedures REQUIRED by the method followed?	Yes
Were all performance/acceptance standards for the required procedures achieved?	Yes
Were significant modifications made to the method as specified in Sect 11.1.2?	No

Parameter	Result	Qualifier	Units	RDL	Dilution Factor
Petroleum Hydrocarbons in Air - Mansfield Lab					
1,3-Butadiene	ND		ug/m3	2.0	1
Methyl tert butyl ether	ND		ug/m3	2.0	1
Benzene	ND		ug/m3	2.0	1
Toluene	ND		ug/m3	2.0	1
Ethylbenzene	ND		ug/m3	2.0	1
p/m-Xylene	ND		ug/m3	4.0	1
o-Xylene	ND		ug/m3	2.0	1
Naphthalene	ND		ug/m3	2.0	1
C5-C8 Aliphatics, Adjusted	ND		ug/m3	12	1
C9-C12 Aliphatics, Adjusted	ND		ug/m3	14	1
C9-C10 Aromatics	ND		ug/m3	10	1

Project Name: UNIFIRST PROPERTY IA / VI **Lab Number:** L1004721

Project Number: 1-2114-2 **Report Date:** 04/10/10

SAMPLE RESULTS

Lab ID:	L1004721-08	Date Collected:	04/02/10 00:00
Client ID:	CAN 618 FC 047	Date Received:	04/03/10
Sample Location:	WOBURN, MA	Field Prep:	Not Specified
Matrix:	Air		
Analytical Method:	96,APH		
Analytical Date:	04/06/10 00:34		
Analyst:	RY		

Quality Control Information

Sample Type:	10 ml/min Composite
Sample Container Type:	Canister - 6 Liter
Sampling Flow Controller:	Mechanical
Sampling Zone:	Unknown
Sampling Flow Meter RPD of pre & post-sampling calibration check:	<=20%
Were all QA/QC procedures REQUIRED by the method followed?	Yes
Were all performance/acceptance standards for the required procedures achieved?	Yes
Were significant modifications made to the method as specified in Sect 11.1.2?	No

Parameter	Result	Qualifier	Units	RDL	Dilution Factor
Petroleum Hydrocarbons in Air - Mansfield Lab					
1,3-Butadiene	ND		ug/m3	2.0	1
Methyl tert butyl ether	ND		ug/m3	2.0	1
Benzene	ND		ug/m3	2.0	1
Toluene	ND		ug/m3	2.0	1
Ethylbenzene	ND		ug/m3	2.0	1
p/m-Xylene	ND		ug/m3	4.0	1
o-Xylene	ND		ug/m3	2.0	1
Naphthalene	ND		ug/m3	2.0	1
C5-C8 Aliphatics, Adjusted	ND		ug/m3	12	1
C9-C12 Aliphatics, Adjusted	ND		ug/m3	14	1
C9-C10 Aromatics	ND		ug/m3	10	1

Project Name: UNIFIRST PROPERTY IA / VI **Lab Number:** L1004721

Project Number: 1-2114-2 **Report Date:** 04/10/10

SAMPLE RESULTS

Lab ID:	L1004721-09	Date Collected:	04/02/10 00:00
Client ID:	CAN 1667 FC 379	Date Received:	04/03/10
Sample Location:	WOBURN, MA	Field Prep:	Not Specified
Matrix:	Air		
Analytical Method:	96,APH		
Analytical Date:	04/06/10 01:10		
Analyst:	RY		

Quality Control Information

Sample Type:	10 ml/min Composite
Sample Container Type:	Canister - 6 Liter
Sampling Flow Controller:	Mechanical
Sampling Zone:	Unknown
Sampling Flow Meter RPD of pre & post-sampling calibration check:	<=20%
Were all QA/QC procedures REQUIRED by the method followed?	Yes
Were all performance/acceptance standards for the required procedures achieved?	Yes
Were significant modifications made to the method as specified in Sect 11.1.2?	No

Parameter	Result	Qualifier	Units	RDL	Dilution Factor
Petroleum Hydrocarbons in Air - Mansfield Lab					
1,3-Butadiene	ND		ug/m3	2.0	1
Methyl tert butyl ether	ND		ug/m3	2.0	1
Benzene	ND		ug/m3	2.0	1
Toluene	ND		ug/m3	2.0	1
Ethylbenzene	ND		ug/m3	2.0	1
p/m-Xylene	ND		ug/m3	4.0	1
o-Xylene	ND		ug/m3	2.0	1
Naphthalene	ND		ug/m3	2.0	1
C5-C8 Aliphatics, Adjusted	ND		ug/m3	12	1
C9-C12 Aliphatics, Adjusted	ND		ug/m3	14	1
C9-C10 Aromatics	ND		ug/m3	10	1

Project Name: UNIFIRST PROPERTY IA / VI **Lab Number:** L1004721

Project Number: 1-2114-2 **Report Date:** 04/10/10

SAMPLE RESULTS

Lab ID:	L1004721-10	Date Collected:	04/02/10 00:00
Client ID:	CAN 584 FC 081	Date Received:	04/03/10
Sample Location:	WOBURN, MA	Field Prep:	Not Specified
Matrix:	Air		
Analytical Method:	96,APH		
Analytical Date:	04/06/10 01:44		
Analyst:	RY		

Quality Control Information

Sample Type:	10 ml/min Composite
Sample Container Type:	Canister - 6 Liter
Sampling Flow Controller:	Mechanical
Sampling Zone:	Unknown
Sampling Flow Meter RPD of pre & post-sampling calibration check:	<=20%
Were all QA/QC procedures REQUIRED by the method followed?	Yes
Were all performance/acceptance standards for the required procedures achieved?	Yes
Were significant modifications made to the method as specified in Sect 11.1.2?	No

Parameter	Result	Qualifier	Units	RDL	Dilution Factor
Petroleum Hydrocarbons in Air - Mansfield Lab					
1,3-Butadiene	ND		ug/m3	2.0	1
Methyl tert butyl ether	ND		ug/m3	2.0	1
Benzene	ND		ug/m3	2.0	1
Toluene	ND		ug/m3	2.0	1
Ethylbenzene	ND		ug/m3	2.0	1
p/m-Xylene	ND		ug/m3	4.0	1
o-Xylene	ND		ug/m3	2.0	1
Naphthalene	ND		ug/m3	2.0	1
C5-C8 Aliphatics, Adjusted	ND		ug/m3	12	1
C9-C12 Aliphatics, Adjusted	ND		ug/m3	14	1
C9-C10 Aromatics	ND		ug/m3	10	1

Project Name: UNIFIRST PROPERTY IA / VI **Lab Number:** L1004721

Project Number: 1-2114-2 **Report Date:** 04/10/10

SAMPLE RESULTS

Lab ID:	L1004721-11	Date Collected:	04/02/10 00:00
Client ID:	CAN 1036 FC 333	Date Received:	04/03/10
Sample Location:	WOBURN, MA	Field Prep:	Not Specified
Matrix:	Air		
Analytical Method:	96,APH		
Analytical Date:	04/06/10 02:19		
Analyst:	RY		

Quality Control Information

Sample Type:	10 ml/min Composite
Sample Container Type:	Canister - 6 Liter
Sampling Flow Controller:	Mechanical
Sampling Zone:	Unknown
Sampling Flow Meter RPD of pre & post-sampling calibration check:	<=20%
Were all QA/QC procedures REQUIRED by the method followed?	Yes
Were all performance/acceptance standards for the required procedures achieved?	Yes
Were significant modifications made to the method as specified in Sect 11.1.2?	No

Parameter	Result	Qualifier	Units	RDL	Dilution Factor
Petroleum Hydrocarbons in Air - Mansfield Lab					
1,3-Butadiene	ND		ug/m3	2.0	1
Methyl tert butyl ether	ND		ug/m3	2.0	1
Benzene	ND		ug/m3	2.0	1
Toluene	ND		ug/m3	2.0	1
Ethylbenzene	ND		ug/m3	2.0	1
p/m-Xylene	ND		ug/m3	4.0	1
o-Xylene	ND		ug/m3	2.0	1
Naphthalene	ND		ug/m3	2.0	1
C5-C8 Aliphatics, Adjusted	ND		ug/m3	12	1
C9-C12 Aliphatics, Adjusted	ND		ug/m3	14	1
C9-C10 Aromatics	ND		ug/m3	10	1

Project Name: UNIFIRST PROPERTY IA / VI **Lab Number:** L1004721

Project Number: 1-2114-2 **Report Date:** 04/10/10

SAMPLE RESULTS

Lab ID:	L1004721-12	Date Collected:	04/02/10 00:00
Client ID:	CAN 782 FC 175	Date Received:	04/03/10
Sample Location:	WOBURN, MA	Field Prep:	Not Specified
Matrix:	Air		
Analytical Method:	96,APH		
Analytical Date:	04/06/10 02:53		
Analyst:	RY		

Quality Control Information

Sample Type:	10 ml/min Composite
Sample Container Type:	Canister - 6 Liter
Sampling Flow Controller:	Mechanical
Sampling Zone:	Unknown
Sampling Flow Meter RPD of pre & post-sampling calibration check:	<=20%
Were all QA/QC procedures REQUIRED by the method followed?	Yes
Were all performance/acceptance standards for the required procedures achieved?	Yes
Were significant modifications made to the method as specified in Sect 11.1.2?	No

Parameter	Result	Qualifier	Units	RDL	Dilution Factor
Petroleum Hydrocarbons in Air - Mansfield Lab					
1,3-Butadiene	ND		ug/m3	2.0	1
Methyl tert butyl ether	ND		ug/m3	2.0	1
Benzene	ND		ug/m3	2.0	1
Toluene	ND		ug/m3	2.0	1
Ethylbenzene	ND		ug/m3	2.0	1
p/m-Xylene	ND		ug/m3	4.0	1
o-Xylene	ND		ug/m3	2.0	1
Naphthalene	ND		ug/m3	2.0	1
C5-C8 Aliphatics, Adjusted	ND		ug/m3	12	1
C9-C12 Aliphatics, Adjusted	ND		ug/m3	14	1
C9-C10 Aromatics	ND		ug/m3	10	1

Project Name: UNIFIRST PROPERTY IA / VI **Lab Number:** L1004721

Project Number: 1-2114-2 **Report Date:** 04/10/10

SAMPLE RESULTS

Lab ID:	L1004721-13	Date Collected:	04/02/10 00:00
Client ID:	CAN 1628 FC 360	Date Received:	04/03/10
Sample Location:	WOBURN, MA	Field Prep:	Not Specified
Matrix:	Air		
Analytical Method:	96,APH		
Analytical Date:	04/06/10 03:27		
Analyst:	RY		

Quality Control Information

Sample Type:	100 ml/min Composite
Sample Container Type:	Canister - 6 Liter
Sampling Flow Controller:	Mechanical
Sampling Zone:	Unknown
Sampling Flow Meter RPD of pre & post-sampling calibration check:	<=20%
Were all QA/QC procedures REQUIRED by the method followed?	Yes
Were all performance/acceptance standards for the required procedures achieved?	Yes
Were significant modifications made to the method as specified in Sect 11.1.2?	No

Parameter	Result	Qualifier	Units	RDL	Dilution Factor
Petroleum Hydrocarbons in Air - Mansfield Lab					
1,3-Butadiene	ND		ug/m3	2.0	1
Methyl tert butyl ether	ND		ug/m3	2.0	1
Benzene	ND		ug/m3	2.0	1
Toluene	ND		ug/m3	2.0	1
Ethylbenzene	ND		ug/m3	2.0	1
p/m-Xylene	ND		ug/m3	4.0	1
o-Xylene	ND		ug/m3	2.0	1
Naphthalene	ND		ug/m3	2.0	1
C5-C8 Aliphatics, Adjusted	ND		ug/m3	12	1
C9-C12 Aliphatics, Adjusted	ND		ug/m3	14	1
C9-C10 Aromatics	ND		ug/m3	10	1

Project Name: UNIFIRST PROPERTY IA / VI **Lab Number:** L1004721

Project Number: 1-2114-2 **Report Date:** 04/10/10

SAMPLE RESULTS

Lab ID:	L1004721-14	Date Collected:	04/02/10 00:00
Client ID:	CAN 972 FC 277	Date Received:	04/03/10
Sample Location:	WOBURN, MA	Field Prep:	Not Specified
Matrix:	Air		
Analytical Method:	96,APH		
Analytical Date:	04/06/10 17:18		
Analyst:	RY		

Quality Control Information

Sample Type:	10 ml/min Composite
Sample Container Type:	Canister - 6 Liter
Sampling Flow Controller:	Mechanical
Sampling Zone:	Unknown
Sampling Flow Meter RPD of pre & post-sampling calibration check:	<=20%
Were all QA/QC procedures REQUIRED by the method followed?	Yes
Were all performance/acceptance standards for the required procedures achieved?	Yes
Were significant modifications made to the method as specified in Sect 11.1.2?	No

Parameter	Result	Qualifier	Units	RDL	Dilution Factor
Petroleum Hydrocarbons in Air - Mansfield Lab					
1,3-Butadiene	ND		ug/m3	2.0	1
Methyl tert butyl ether	ND		ug/m3	2.0	1
Benzene	ND		ug/m3	2.0	1
Toluene	ND		ug/m3	2.0	1
Ethylbenzene	ND		ug/m3	2.0	1
p/m-Xylene	ND		ug/m3	4.0	1
o-Xylene	ND		ug/m3	2.0	1
Naphthalene	ND		ug/m3	2.0	1
C5-C8 Aliphatics, Adjusted	ND		ug/m3	12	1
C9-C12 Aliphatics, Adjusted	ND		ug/m3	14	1
C9-C10 Aromatics	ND		ug/m3	10	1

Project Name: UNIFIRST PROPERTY IA / VI **Lab Number:** L1004721

Project Number: 1-2114-2 **Report Date:** 04/10/10

SAMPLE RESULTS

Lab ID:	L1004721-15	Date Collected:	04/02/10 00:00
Client ID:	CAN 1690 FC 028	Date Received:	04/03/10
Sample Location:	WOBURN, MA	Field Prep:	Not Specified
Matrix:	Air		
Analytical Method:	96,APH		
Analytical Date:	04/06/10 17:53		
Analyst:	RY		

Quality Control Information

Sample Type:	10 ml/min Composite
Sample Container Type:	Canister - 6 Liter
Sampling Flow Controller:	Mechanical
Sampling Zone:	Unknown
Sampling Flow Meter RPD of pre & post-sampling calibration check:	<=20%
Were all QA/QC procedures REQUIRED by the method followed?	Yes
Were all performance/acceptance standards for the required procedures achieved?	Yes
Were significant modifications made to the method as specified in Sect 11.1.2?	No

Parameter	Result	Qualifier	Units	RDL	Dilution Factor
Petroleum Hydrocarbons in Air - Mansfield Lab					
1,3-Butadiene	ND		ug/m3	2.0	1
Methyl tert butyl ether	ND		ug/m3	2.0	1
Benzene	ND		ug/m3	2.0	1
Toluene	ND		ug/m3	2.0	1
Ethylbenzene	ND		ug/m3	2.0	1
p/m-Xylene	ND		ug/m3	4.0	1
o-Xylene	ND		ug/m3	2.0	1
Naphthalene	ND		ug/m3	2.0	1
C5-C8 Aliphatics, Adjusted	ND		ug/m3	12	1
C9-C12 Aliphatics, Adjusted	ND		ug/m3	14	1
C9-C10 Aromatics	ND		ug/m3	10	1

Project Name: UNIFIRST PROPERTY IA / VI **Lab Number:** L1004721

Project Number: 1-2114-2 **Report Date:** 04/10/10

SAMPLE RESULTS

Lab ID:	L1004721-16	Date Collected:	04/02/10 00:00
Client ID:	CAN 1614 FC 309	Date Received:	04/03/10
Sample Location:	WOBURN, MA	Field Prep:	Not Specified
Matrix:	Air		
Analytical Method:	96,APH		
Analytical Date:	04/06/10 18:28		
Analyst:	RY		

Quality Control Information

Sample Type:	10 ml/min Composite
Sample Container Type:	Canister - 6 Liter
Sampling Flow Controller:	Mechanical
Sampling Zone:	Unknown
Sampling Flow Meter RPD of pre & post-sampling calibration check:	<=20%
Were all QA/QC procedures REQUIRED by the method followed?	Yes
Were all performance/acceptance standards for the required procedures achieved?	Yes
Were significant modifications made to the method as specified in Sect 11.1.2?	No

Parameter	Result	Qualifier	Units	RDL	Dilution Factor
Petroleum Hydrocarbons in Air - Mansfield Lab					
1,3-Butadiene	ND		ug/m3	2.0	1
Methyl tert butyl ether	ND		ug/m3	2.0	1
Benzene	ND		ug/m3	2.0	1
Toluene	ND		ug/m3	2.0	1
Ethylbenzene	ND		ug/m3	2.0	1
p/m-Xylene	ND		ug/m3	4.0	1
o-Xylene	ND		ug/m3	2.0	1
Naphthalene	ND		ug/m3	2.0	1
C5-C8 Aliphatics, Adjusted	ND		ug/m3	12	1
C9-C12 Aliphatics, Adjusted	ND		ug/m3	14	1
C9-C10 Aromatics	ND		ug/m3	10	1

Project Name: UNIFIRST PROPERTY IA / VI **Lab Number:** L1004721

Project Number: 1-2114-2 **Report Date:** 04/10/10

SAMPLE RESULTS

Lab ID:	L1004721-17	Date Collected:	04/02/10 00:00
Client ID:	CAN 639 FC 231	Date Received:	04/03/10
Sample Location:	WOBURN, MA	Field Prep:	Not Specified
Matrix:	Air		
Analytical Method:	96,APH		
Analytical Date:	04/06/10 19:03		
Analyst:	RY		

Quality Control Information

Sample Type:	10 ml/min Composite
Sample Container Type:	Canister - 6 Liter
Sampling Flow Controller:	Mechanical
Sampling Zone:	Unknown
Sampling Flow Meter RPD of pre & post-sampling calibration check:	<=20%
Were all QA/QC procedures REQUIRED by the method followed?	Yes
Were all performance/acceptance standards for the required procedures achieved?	Yes
Were significant modifications made to the method as specified in Sect 11.1.2?	No

Parameter	Result	Qualifier	Units	RDL	Dilution Factor
Petroleum Hydrocarbons in Air - Mansfield Lab					
1,3-Butadiene	ND		ug/m3	2.0	1
Methyl tert butyl ether	ND		ug/m3	2.0	1
Benzene	ND		ug/m3	2.0	1
Toluene	ND		ug/m3	2.0	1
Ethylbenzene	ND		ug/m3	2.0	1
p/m-Xylene	ND		ug/m3	4.0	1
o-Xylene	ND		ug/m3	2.0	1
Naphthalene	ND		ug/m3	2.0	1
C5-C8 Aliphatics, Adjusted	ND		ug/m3	12	1
C9-C12 Aliphatics, Adjusted	ND		ug/m3	14	1
C9-C10 Aromatics	ND		ug/m3	10	1

Project Name: UNIFIRST PROPERTY IA / VI **Lab Number:** L1004721

Project Number: 1-2114-2 **Report Date:** 04/10/10

SAMPLE RESULTS

Lab ID:	L1004721-18	Date Collected:	04/02/10 00:00
Client ID:	CAN 1566 FC 262	Date Received:	04/03/10
Sample Location:	WOBURN, MA	Field Prep:	Not Specified
Matrix:	Air		
Analytical Method:	96,APH		
Analytical Date:	04/06/10 19:38		
Analyst:	RY		

Quality Control Information

Sample Type:	10 ml/min Composite
Sample Container Type:	Canister - 6 Liter
Sampling Flow Controller:	Mechanical
Sampling Zone:	Unknown
Sampling Flow Meter RPD of pre & post-sampling calibration check:	<=20%
Were all QA/QC procedures REQUIRED by the method followed?	Yes
Were all performance/acceptance standards for the required procedures achieved?	Yes
Were significant modifications made to the method as specified in Sect 11.1.2?	No

Parameter	Result	Qualifier	Units	RDL	Dilution Factor
Petroleum Hydrocarbons in Air - Mansfield Lab					
1,3-Butadiene	ND		ug/m3	2.0	1
Methyl tert butyl ether	ND		ug/m3	2.0	1
Benzene	ND		ug/m3	2.0	1
Toluene	ND		ug/m3	2.0	1
Ethylbenzene	ND		ug/m3	2.0	1
p/m-Xylene	ND		ug/m3	4.0	1
o-Xylene	ND		ug/m3	2.0	1
Naphthalene	ND		ug/m3	2.0	1
C5-C8 Aliphatics, Adjusted	ND		ug/m3	12	1
C9-C12 Aliphatics, Adjusted	ND		ug/m3	14	1
C9-C10 Aromatics	ND		ug/m3	10	1

Project Name: UNIFIRST PROPERTY IA / VI **Lab Number:** L1004721

Project Number: 1-2114-2 **Report Date:** 04/10/10

SAMPLE RESULTS

Lab ID:	L1004721-19	Date Collected:	04/02/10 00:00
Client ID:	CAN 1626 FC 002	Date Received:	04/03/10
Sample Location:	WOBURN, MA	Field Prep:	Not Specified
Matrix:	Air		
Analytical Method:	96,APH		
Analytical Date:	04/06/10 20:13		
Analyst:	RY		

Quality Control Information

Sample Type:	10 ml/min Composite
Sample Container Type:	Canister - 6 Liter
Sampling Flow Controller:	Mechanical
Sampling Zone:	Unknown
Sampling Flow Meter RPD of pre & post-sampling calibration check:	<=20%
Were all QA/QC procedures REQUIRED by the method followed?	Yes
Were all performance/acceptance standards for the required procedures achieved?	Yes
Were significant modifications made to the method as specified in Sect 11.1.2?	No

Parameter	Result	Qualifier	Units	RDL	Dilution Factor
Petroleum Hydrocarbons in Air - Mansfield Lab					
1,3-Butadiene	ND		ug/m3	2.0	1
Methyl tert butyl ether	ND		ug/m3	2.0	1
Benzene	ND		ug/m3	2.0	1
Toluene	ND		ug/m3	2.0	1
Ethylbenzene	ND		ug/m3	2.0	1
p/m-Xylene	ND		ug/m3	4.0	1
o-Xylene	ND		ug/m3	2.0	1
Naphthalene	ND		ug/m3	2.0	1
C5-C8 Aliphatics, Adjusted	ND		ug/m3	12	1
C9-C12 Aliphatics, Adjusted	ND		ug/m3	14	1
C9-C10 Aromatics	ND		ug/m3	10	1

Project Name:	UNIFIRST PROPERTY IA / VI	**Lab Number:**	L1004721
Project Number:	1-2114-2	**Report Date:**	04/10/10

SAMPLE RESULTS

Lab ID:	L1004721-20	Date Collected:	04/02/10 00:00
Client ID:	CAN 695 FC 290	Date Received:	04/03/10
Sample Location:	WOBURN, MA	Field Prep:	Not Specified
Matrix:	Air		
Analytical Method:	96,APH		
Analytical Date:	04/06/10 20:48		
Analyst:	RY		

Quality Control Information

Sample Type:	10 ml/min Composite
Sample Container Type:	Canister - 6 Liter
Sampling Flow Controller:	Mechanical
Sampling Zone:	Unknown
Sampling Flow Meter RPD of pre & post-sampling calibration check:	<=20%
Were all QA/QC procedures REQUIRED by the method followed?	Yes
Were all performance/acceptance standards for the required procedures achieved?	Yes
Were significant modifications made to the method as specified in Sect 11.1.2?	No

Parameter	Result	Qualifier	Units	RDL	Dilution Factor
Petroleum Hydrocarbons in Air - Mansfield Lab					
1,3-Butadiene	ND		ug/m3	2.0	1
Methyl tert butyl ether	ND		ug/m3	2.0	1
Benzene	ND		ug/m3	2.0	1
Toluene	ND		ug/m3	2.0	1
Ethylbenzene	ND		ug/m3	2.0	1
p/m-Xylene	ND		ug/m3	4.0	1
o-Xylene	ND		ug/m3	2.0	1
Naphthalene	ND		ug/m3	2.0	1
C5-C8 Aliphatics, Adjusted	ND		ug/m3	12	1
C9-C12 Aliphatics, Adjusted	ND		ug/m3	14	1
C9-C10 Aromatics	ND		ug/m3	10	1

Project Name: UNIFIRST PROPERTY IA / VI **Lab Number:** L1004721

Project Number: 1-2114-2 **Report Date:** 04/10/10

SAMPLE RESULTS

Lab ID:	L1004721-21	Date Collected:	04/02/10 00:00
Client ID:	CAN 609 FC 183	Date Received:	04/03/10
Sample Location:	WOBURN, MA	Field Prep:	Not Specified
Matrix:	Air		
Analytical Method:	96,APH		
Analytical Date:	04/06/10 21:23		
Analyst:	RY		

Quality Control Information

Sample Type:	10 ml/min Composite
Sample Container Type:	Canister - 6 Liter
Sampling Flow Controller:	Mechanical
Sampling Zone:	Unknown
Sampling Flow Meter RPD of pre & post-sampling calibration check:	<=20%
Were all QA/QC procedures REQUIRED by the method followed?	Yes
Were all performance/acceptance standards for the required procedures achieved?	Yes
Were significant modifications made to the method as specified in Sect 11.1.2?	No

Parameter	Result	Qualifier	Units	RDL	Dilution Factor
Petroleum Hydrocarbons in Air - Mansfield Lab					
1,3-Butadiene	ND		ug/m3	2.0	1
Methyl tert butyl ether	ND		ug/m3	2.0	1
Benzene	ND		ug/m3	2.0	1
Toluene	ND		ug/m3	2.0	1
Ethylbenzene	ND		ug/m3	2.0	1
p/m-Xylene	ND		ug/m3	4.0	1
o-Xylene	ND		ug/m3	2.0	1
Naphthalene	ND		ug/m3	2.0	1
C5-C8 Aliphatics, Adjusted	ND		ug/m3	12	1
C9-C12 Aliphatics, Adjusted	ND		ug/m3	14	1
C9-C10 Aromatics	ND		ug/m3	10	1

Project Name: UNIFIRST PROPERTY IA / VI **Lab Number:** L1004721

Project Number: 1-2114-2 **Report Date:** 04/10/10

SAMPLE RESULTS

Lab ID:	L1004721-22	Date Collected:	04/02/10 00:00
Client ID:	CAN 1676 FC 205	Date Received:	04/03/10
Sample Location:	WOBURN, MA	Field Prep:	Not Specified
Matrix:	Air		
Analytical Method:	96,APH		
Analytical Date:	04/06/10 21:56		
Analyst:	RY		

Quality Control Information

Sample Type:	10 ml/min Composite
Sample Container Type:	Canister - 6 Liter
Sampling Flow Controller:	Mechanical
Sampling Zone:	Unknown
Sampling Flow Meter RPD of pre & post-sampling calibration check:	<=20%
Were all QA/QC procedures REQUIRED by the method followed?	Yes
Were all performance/acceptance standards for the required procedures achieved?	Yes
Were significant modifications made to the method as specified in Sect 11.1.2?	No

Parameter	Result	Qualifier	Units	RDL	Dilution Factor
Petroleum Hydrocarbons in Air - Mansfield Lab					
1,3-Butadiene	ND		ug/m3	2.0	1
Methyl tert butyl ether	ND		ug/m3	2.0	1
Benzene	ND		ug/m3	2.0	1
Toluene	ND		ug/m3	2.0	1
Ethylbenzene	ND		ug/m3	2.0	1
p/m-Xylene	ND		ug/m3	4.0	1
o-Xylene	ND		ug/m3	2.0	1
Naphthalene	ND		ug/m3	2.0	1
C5-C8 Aliphatics, Adjusted	ND		ug/m3	12	1
C9-C12 Aliphatics, Adjusted	ND		ug/m3	14	1
C9-C10 Aromatics	ND		ug/m3	10	1

Project Name: UNIFIRST PROPERTY IA / VI **Lab Number:** L1004721

Project Number: 1-2114-2 **Report Date:** 04/10/10

SAMPLE RESULTS

Lab ID:	L1004721-23	Date Collected:	04/02/10 00:00
Client ID:	CAN 986 FC 406	Date Received:	04/03/10
Sample Location:	WOBURN, MA	Field Prep:	Not Specified
Matrix:	Air		
Analytical Method:	96,APH		
Analytical Date:	04/06/10 22:31		
Analyst:	RY		

Quality Control Information

Sample Type:	10 ml/min Composite
Sample Container Type:	Canister - 6 Liter
Sampling Flow Controller:	Mechanical
Sampling Zone:	Unknown
Sampling Flow Meter RPD of pre & post-sampling calibration check:	<=20%
Were all QA/QC procedures REQUIRED by the method followed?	Yes
Were all performance/acceptance standards for the required procedures achieved?	Yes
Were significant modifications made to the method as specified in Sect 11.1.2?	No

Parameter	Result	Qualifier	Units	RDL	Dilution Factor
Petroleum Hydrocarbons in Air - Mansfield Lab					
1,3-Butadiene	ND		ug/m3	2.0	1
Methyl tert butyl ether	ND		ug/m3	2.0	1
Benzene	ND		ug/m3	2.0	1
Toluene	ND		ug/m3	2.0	1
Ethylbenzene	ND		ug/m3	2.0	1
p/m-Xylene	ND		ug/m3	4.0	1
o-Xylene	ND		ug/m3	2.0	1
Naphthalene	ND		ug/m3	2.0	1
C5-C8 Aliphatics, Adjusted	ND		ug/m3	12	1
C9-C12 Aliphatics, Adjusted	ND		ug/m3	14	1
C9-C10 Aromatics	ND		ug/m3	10	1

Project Name: UNIFIRST PROPERTY IA / VI **Lab Number:** L1004721

Project Number: 1-2114-2 **Report Date:** 04/10/10

SAMPLE RESULTS

Lab ID:	L1004721-24	Date Collected:	04/02/10 00:00
Client ID:	CAN 1704 FC 369	Date Received:	04/03/10
Sample Location:	WOBURN, MA	Field Prep:	Not Specified
Matrix:	Air		
Analytical Method:	96,APH		
Analytical Date:	04/06/10 23:06		
Analyst:	RY		

Quality Control Information

Sample Type:	10 ml/min Composite
Sample Container Type:	Canister - 6 Liter
Sampling Flow Controller:	Mechanical
Sampling Zone:	Unknown
Sampling Flow Meter RPD of pre & post-sampling calibration check:	<=20%
Were all QA/QC procedures REQUIRED by the method followed?	Yes
Were all performance/acceptance standards for the required procedures achieved?	Yes
Were significant modifications made to the method as specified in Sect 11.1.2?	No

Parameter	Result	Qualifier	Units	RDL	Dilution Factor
Petroleum Hydrocarbons in Air - Mansfield Lab					
1,3-Butadiene	ND		ug/m3	2.0	1
Methyl tert butyl ether	ND		ug/m3	2.0	1
Benzene	ND		ug/m3	2.0	1
Toluene	ND		ug/m3	2.0	1
Ethylbenzene	ND		ug/m3	2.0	1
p/m-Xylene	ND		ug/m3	4.0	1
o-Xylene	ND		ug/m3	2.0	1
Naphthalene	ND		ug/m3	2.0	1
C5-C8 Aliphatics, Adjusted	ND		ug/m3	12	1
C9-C12 Aliphatics, Adjusted	ND		ug/m3	14	1
C9-C10 Aromatics	ND		ug/m3	10	1

Project Name: UNIFIRST PROPERTY IA / VI **Lab Number:** L1004721

Project Number: 1-2114-2 **Report Date:** 04/10/10

SAMPLE RESULTS

Lab ID:	L1004721-25	Date Collected:	04/02/10 00:00
Client ID:	CAN 949 FC 242	Date Received:	04/03/10
Sample Location:	WOBURN, MA	Field Prep:	Not Specified
Matrix:	Air		
Analytical Method:	96,APH		
Analytical Date:	04/06/10 23:43		
Analyst:	RY		

Quality Control Information

Sample Type:	10 ml/min Composite
Sample Container Type:	Canister - 6 Liter
Sampling Flow Controller:	Mechanical
Sampling Zone:	Unknown
Sampling Flow Meter RPD of pre & post-sampling calibration check:	<=20%
Were all QA/QC procedures REQUIRED by the method followed?	Yes
Were all performance/acceptance standards for the required procedures achieved?	Yes
Were significant modifications made to the method as specified in Sect 11.1.2?	No

Parameter	Result	Qualifier	Units	RDL	Dilution Factor
Petroleum Hydrocarbons in Air - Mansfield Lab					
1,3-Butadiene	ND		ug/m3	2.0	1
Methyl tert butyl ether	ND		ug/m3	2.0	1
Benzene	ND		ug/m3	2.0	1
Toluene	ND		ug/m3	2.0	1
Ethylbenzene	ND		ug/m3	2.0	1
p/m-Xylene	ND		ug/m3	4.0	1
o-Xylene	ND		ug/m3	2.0	1
Naphthalene	ND		ug/m3	2.0	1
C5-C8 Aliphatics, Adjusted	ND		ug/m3	12	1
C9-C12 Aliphatics, Adjusted	ND		ug/m3	14	1
C9-C10 Aromatics	ND		ug/m3	10	1

Project Name: UNIFIRST PROPERTY IA / VI **Lab Number:** L1004721

Project Number: 1-2114-2 **Report Date:** 04/10/10

Method Blank Analysis
Batch Quality Control

Analytical Method: 96,APH
Analytical Date: 04/05/10 17:49
Analyst: RY

Parameter	Result	Qualifier	Units	RDL
Petroleum Hydrocarbons in Air - Mansfield Lab for sample(s): 01,03-13 Batch: WG407080-4				
1,3-Butadiene	ND		ug/m3	2.0
Methyl tert butyl ether	ND		ug/m3	2.0
Benzene	ND		ug/m3	2.0
Toluene	ND		ug/m3	2.0
Ethylbenzene	ND		ug/m3	2.0
p/m-Xylene	ND		ug/m3	4.0
o-Xylene	ND		ug/m3	2.0
Naphthalene	ND		ug/m3	2.0
C5-C8 Aliphatics, Adjusted	ND		ug/m3	12
C9-C12 Aliphatics, Adjusted	ND		ug/m3	14
C9-C10 Aromatics	ND		ug/m3	10

Project Name: UNIFIRST PROPERTY IA / VI **Lab Number:** L1004721

Project Number: 1-2114-2 **Report Date:** 04/10/10

Method Blank Analysis
Batch Quality Control

Analytical Method: 96,APH
Analytical Date: 04/06/10 16:42
Analyst: RY

Parameter	Result	Qualifier	Units	RDL
Petroleum Hydrocarbons in Air - Mansfield Lab for sample(s): 14-25 Batch: WG407083-4				
1,3-Butadiene	ND		ug/m3	2.0
Methyl tert butyl ether	ND		ug/m3	2.0
Benzene	ND		ug/m3	2.0
Toluene	ND		ug/m3	2.0
Ethylbenzene	ND		ug/m3	2.0
p/m-Xylene	ND		ug/m3	4.0
o-Xylene	ND		ug/m3	2.0
Naphthalene	ND		ug/m3	2.0
C5-C8 Aliphatics, Adjusted	ND		ug/m3	12
C9-C12 Aliphatics, Adjusted	ND		ug/m3	14
C9-C10 Aromatics	ND		ug/m3	10

Lab Control Sample Analysis
Batch Quality Control

Project Name: UNIFIRST PROPERTY IA / VI

Project Number: 1-2114-2

Lab Number: L1004721

Report Date: 04/10/10

Parameter	LCS %Recovery	Qual	LCSD %Recovery	Qual	%Recovery Limits	RPD	Qual	RPD Limits
Petroleum Hydrocarbons in Air - Mansfield Lab Associated sample(s): 01,03-13 Batch: WG407080-3								
1,3-Butadiene	80		-		70-130	-		
Methyl tert butyl ether	130		-		70-130	-		
Benzene	112		-		70-130	-		
Toluene	127		-		70-130	-		
Ethylbenzene	**132**	Q	-		70-130	-		
p/m-Xylene	130		-		70-130	-		
o-Xylene	**131**	Q	-		70-130	-		
Naphthalene	138		-		50-150	-		
C5-C8 Aliphatics, Adjusted	103		-		70-130	-		
C9-C12 Aliphatics, Adjusted	128		-		70-130	-		
C9-C10 Aromatics	113		-		70-130	-		

Lab Control Sample Analysis
Batch Quality Control

Project Name: UNIFIRST PROPERTY IA / VI

Project Number: 1-2114-2

Lab Number: L1004721

Report Date: 04/10/10

Parameter	LCS %Recovery	Qual	LCSD %Recovery	Qual	%Recovery Limits	RPD	Qual	RPD Limits
Petroleum Hydrocarbons in Air - Mansfield Lab Associated sample(s): 14-25 Batch: WG407083-3								
1,3-Butadiene	89		-		70-130	-		
Methyl tert butyl ether	94		-		70-130	-		
Benzene	90		-		70-130	-		
Toluene	92		-		70-130	-		
Ethylbenzene	92		-		70-130	-		
p/m-Xylene	90		-		70-130	-		
o-Xylene	92		-		70-130	-		
Naphthalene	107		-		50-150	-		
C5-C8 Aliphatics, Adjusted	86		-		70-130	-		
C9-C12 Aliphatics, Adjusted	101		-		70-130	-		
C9-C10 Aromatics	82		-		70-130	-		

Project Name: UNIFIRST PROPERTY IA / VI
Project Number: 1-2114-2

Lab Number: L1004721
Report Date: 04/10/10

Sample Receipt and Container Information

Were project specific reporting limits specified? YES

Cooler Information

Cooler	Custody Seal
NA	Absent

Container Information

Container ID	Container Type	Cooler	pH	Temp deg C	Pres	Seal	Analysis
L1004721-01A	Canister - 6 Liter	NA	NA	NA	NA	Absent	APH-10(30),TO15-SIM(30)
L1004721-03A	Canister - 6 Liter	NA	NA	NA	NA	Absent	APH-10(30),TO15-SIM(30)
L1004721-04A	Canister - 6 Liter	NA	NA	NA	NA	Absent	APH-10(30),TO15-SIM(30)
L1004721-05A	Canister - 6 Liter	NA	NA	NA	NA	Absent	APH-10(30),TO15-SIM(30)
L1004721-06A	Canister - 6 Liter	NA	NA	NA	NA	Absent	APH-10(30),TO15-SIM(30)
L1004721-07A	Canister - 6 Liter	NA	NA	NA	NA	Absent	APH-10(30),TO15-SIM(30)
L1004721-08A	Canister - 6 Liter	NA	NA	NA	NA	Absent	APH-10(30),TO15-SIM(30)
L1004721-09A	Canister - 6 Liter	NA	NA	NA	NA	Absent	APH-10(30),TO15-SIM(30)
L1004721-10A	Canister - 6 Liter	NA	NA	NA	NA	Absent	APH-10(30),TO15-SIM(30)
L1004721-11A	Canister - 6 Liter	NA	NA	NA	NA	Absent	APH-10(30),TO15-SIM(30)
L1004721-12A	Canister - 6 Liter	NA	NA	NA	NA	Absent	APH-10(30),TO15-SIM(30)
L1004721-13A	Canister - 6 Liter	NA	NA	NA	NA	Absent	APH-10(30),TO15-SIM(30)
L1004721-14A	Canister - 6 Liter	NA	NA	NA	NA	Absent	APH-10(30),TO15-SIM(30)
L1004721-15A	Canister - 6 Liter	NA	NA	NA	NA	Absent	APH-10(30),TO15-SIM(30)
L1004721-16A	Canister - 6 Liter	NA	NA	NA	NA	Absent	APH-10(30),TO15-SIM(30)
L1004721-17A	Canister - 6 Liter	NA	NA	NA	NA	Absent	APH-10(30),TO15-SIM(30)
L1004721-18A	Canister - 6 Liter	NA	NA	NA	NA	Absent	APH-10(30),TO15-SIM(30)
L1004721-19A	Canister - 6 Liter	NA	NA	NA	NA	Absent	APH-10(30),TO15-SIM(30)
L1004721-20A	Canister - 6 Liter	NA	NA	NA	NA	Absent	APH-10(30),TO15-SIM(30)
L1004721-21A	Canister - 6 Liter	NA	NA	NA	NA	Absent	APH-10(30),TO15-SIM(30)
L1004721-22A	Canister - 6 Liter	NA	NA	NA	NA	Absent	APH-10(30),TO15-SIM(30)
L1004721-23A	Canister - 6 Liter	NA	NA	NA	NA	Absent	APH-10(30),TO15-SIM(30)
L1004721-24A	Canister - 6 Liter	NA	NA	NA	NA	Absent	APH-10(30),TO15-SIM(30)
L1004721-25A	Canister - 6 Liter	NA	NA	NA	NA	Absent	APH-10(30),TO15-SIM(30)

*Hold days indicated by values in parentheses

Project Name:	UNIFIRST PROPERTY IA / VI	**Lab Number:**	L1004721
Project Number:	1-2114-2	**Report Date:**	04/10/10

GLOSSARY

Acronyms

EPA	· Environmental Protection Agency.
LCS	· Laboratory Control Sample: A sample matrix, free from the analytes of interest, spiked with verified known amounts of analytes or a material containing known and verified amounts of analytes.
LCSD	· Laboratory Control Sample Duplicate: Refer to LCS.
MS	· Matrix Spike Sample: A sample prepared by adding a known mass of target analyte to a specified amount of matrix sample for which an independent estimate of target analyte concentration is available.
MSD	· Matrix Spike Sample Duplicate: Refer to MS.
NA	· Not Applicable.
NC	· Not Calculated: Term is utilized when one or more of the results utilized in the calculation are non-detect at the parameter's reporting unit.
NI	· Not Ignitable.
RDL	· Reported Detection Limit: The value at which an instrument can accurately measure an analyte at a specific concentration. The RDL includes any adjustments from dilutions, concentrations or moisture content, where applicable.
RPD	· Relative Percent Difference: The results from matrix and/or matrix spike duplicates are primarily designed to assess the precision of analytical results in a given matrix and are expressed as relative percent difference (RPD). Values which are less than five times the reporting limit for any individual parameter are evaluated by utilizing the absolute difference between the values; although the RPD value will be provided in the report.

Terms

Analytical Method: Both the document from which the method originates and the analytical reference method. (Example: EPA 8260B is shown as 1,8260B.) The codes for the reference method documents are provided in the References section of the Addendum.

Data Qualifiers

A	· Spectra identified as "Aldol Condensation Product".
B	· The analyte was detected above the reporting limit in the associated method blank. Flag only applies to associated field samples that have detectable concentrations of the analyte at less than five times (5x) the concentration found in the blank. For DOD-related projects, flag only applies to associated field samples that have detectable concentrations of the analyte at less than ten times (10x) the concentration found in the blank AND the analyte was detected above one-half the reporting limit (or above the reporting limit for common lab contaminants) in the associated method blank.
D	· Concentration of analyte was quantified from diluted analysis. Flag only applies to field samples that have detectable concentrations of the analyte.
E	· Concentration of analyte exceeds the range of the calibration curve and/or linear range of the instrument.
H	· The analysis of pH was performed beyond the regulatory-required holding time of 15 minutes from the time of sample collection.
P	· The RPD between the results for the two columns exceeds the method-specified criteria.
Q	· The quality control sample exceeds the associated acceptance criteria. Note: This flag is not applicable for matrix spike recoveries when the sample concentration is greater than 4x the spike added or for batch duplicate RPD when the sample concentrations are less than 5x the RDL. (Metals only.)
R	· Analytical results are from sample re-analysis.
RE	· Analytical results are from sample re-extraction.
J	· Estimated value. The Target analyte concentration is below the quantitation limit (RDL), but above one half the RDL. This represents an estimated concentration for Tentatively Identified Compounds (TICs).
ND	· Not detected at one half the reported detection limit (RDL) for the sample.

Report Format: DU "J" Qualify to 1/2 the RDL

Project Name: UNIFIRST PROPERTY IA / VI **Lab Number:** L1004721
Project Number: 1-2114-2 **Report Date:** 04/10/10

REFERENCES

48 Compendium of Methods for the Determination of Toxic Organic Compounds in Ambient Air. Second Edition. EPA/625/R-96/010b, January 1999.

96 Method for the Determination of Air-Phase Petroleum Hydrocarbons (APH), Massachusetts Department of Environmental Protection (MassDEP), December 2009, Revision 1.

LIMITATION OF LIABILITIES

Alpha Analytical performs services with reasonable care and diligence normal to the analytical testing laboratory industry. In the event of an error, the sole and exclusive responsibility of Alpha Woods Hole Labs shall be to re-perform the work at it's own expense. In no event shall Alpha Analytical be held liable for any incidental, consequential or special damages, including but not limited to, damages in any way connected with the use of, interpretation of, information or analysis provided by Alpha Woods Hole Labs.

We strongly urge our clients to comply with EPA protocol regarding sample volume, preservation, cooling, containers, sampling procedures, holding time and splitting of samples in the field.

Certificate/Approval Program Summary

Last revised December 15, 2009 – Mansfield Facility

The following list includes only those analytes/methods for which certification/approval is currently held.
For a complete listing of analytes for the referenced methods, please contact your Alpha Customer Service Representative.

Connecticut Department of Public Health Certificate/Lab ID: PH-0141.

Wastewater/Non-Potable Water (Inorganic Parameters: pH, Turbidity, Conductivity, Alkalinity, Aluminum, Antimony, Arsenic, Barium, Beryllium, Boron, Cadmium, Calcium, Chromium, Cobalt, Copper, Iron, Lead, Magnesium, Manganese, Mercury, Molybdenum, Nickel, Potassium, Selenium, Silver, Sodium, Strontium, Thallium, Tin, Vanadium, Zinc, Total Residue (Solids), Total Suspended Solids (non-filterable), Total Cyanide. Organic Parameters: PCBs, Organochlorine Pesticides, Technical Chlordane, Toxaphene, Acid Extractables, Benzidines, Phthalate Esters, Nitrosamines, Nitroaromatics & Isophorone, PAHs, Haloethers, Chlorinated Hydrocarbons, Volatile Organics.)

Solid Waste/Soil (Inorganic Parameters: pH, Aluminum, Antimony, Arsenic, Barium, Beryllium, Cadmium, Calcium, Chromium, Hexavalent Chromium, Cobalt, Copper, Iron, Lead, Magnesium, Manganese, Mercury, Molybdenum, Nickel, Potassium, Selenium, Silver, Sodium, Thallium, Vanadium, Zinc, Total Organic Carbon, Total Cyanide, Corrosivity, TCLP 1311. Organic Parameters: PCBs, Organochlorine Pesticides, Technical Chlordane, Toxaphene, Volatile Organics, Acid Extractables, Benzidines, Phthalates, Nitrosamines, Nitroaromatics & Cyclic Ketones, PAHs, Haloethers, Chlorinated Hydrocarbons.)

Florida Department of Health Certificate/Lab ID: E87814. ***NELAP Accredited.***

Non-Potable Water (Inorganic Parameters: SM2320B, EPA 120.1, SM2510B, EPA 245.1, EPA 150.1, EPA 160.2, SM2540D, EPA 335.2, SM2540G, EPA 180.1. Organic Parameters: EPA 625, 608.)

Solid & Chemical Materials (Inorganic Parameters: 6020, 7470, 7471, 9045, 9014. Organic Parameters: EPA 8260, 8270, 8082, 8081.)

Air & Emissions (EPA TO-15.)

Louisiana Department of Environmental Quality Certificate/Lab ID: 03090. ***NELAP Accredited.***

Non-Potable Water (Inorganic Parameters: EPA 120.1, 150.1, 160.2, 180.1, 200.8, 245.1, 310.1, 335.2, 608, 625, 1631, 3010, 3015, 3020, 6020, 9010, 9014, 9040, SM2320B, 2510B, 2540D, 2540G, 4500CN-E, 4500H-B, Organic Parameters: EPA 3510, 3580, 3630, 3640, 3660, 3665, 5030, 8015 (mod), 3570, 8081, 8082, 8260, 8270,)

Solid & Chemical Materials (Inorganic Parameters: 6020, 7196, 7470, 7471, 7474, 9010, 9014, 9040, 9045, 9060. Organic Parameters: EPA 8015 (mod), EPA 3570, 1311, 3050, 3051, 3060, 3580, 3630, 3640, 3660, 3665, 5035, 8081, 8082, 8260, 8270.)

Biological Tissue (Inorganic Parameters: EPA 6020. Organic Parameters: EPA 3570, 3510, 3610, 3630, 3640, 8270.)

Maine Department of Human Services Certificate/Lab ID: MA0030.

Wastewater (Inorganic Parameters: EPA 120.1, 300.0, SM 2320, 2510B, 2540C, 2540D, EPA 245.1. Organic Parameters: 608, 624.)

Massachusetts Department of Environmental Protection Certificate/Lab ID: M-MA030.

Non-Potable Water (Inorganic Parameters: SM4500H+B. Organic Parameters: EPA 624.)

New Hampshire Department of Environmental Services Certificate/Lab ID: 2206. ***NELAP Accredited.***

Non-Potable Water (Inorganic Parameters: EPA 200.8, 245.1, 1631E, 120.1, 150.1, 180.1, 310.1, 335.2, 160.2, SM2540D, 2540G, 4500CN-E, 4500H+B, 2320B, 2510B. Organic Parameters: EPA 625, 608.)

New Jersey Department of Environmental Protection Certificate/Lab ID: MA015. ***NELAP Accredited.***

Non-Potable Water (Inorganic Parameters: SW-846 1312, 3010, 3020A, 3015, 6020, SM2320B, EPA 200.8, SM2540C, 2540D, 2540G, EPA 120.1, SM2510B, EPA 180.1, 245.1, 1631E, SW-846 9040B, 6020, 9010B, 9014 Organic Parameters: EPA 608, 625, SW-846 3510C, 3580A, 5030B, 3035L, 5035H, 3630C, 3640A, 3660B, 3665A, 8081A, 8082 8260B, 8270C)

Solid & Chemical Materials (Inorganic Parameters: SW-846 6020, 9010B, 9014, 1311, 1312, 3050B, 3051, 3060A, 7196A, 7470A, 7471A, 9045C, 9060. Organic Parameters: SW-846 3580A, 5030B, 3035L, 5035H, 3630C, 3640A, 3660B, 3665A, 8081A, 8082, 8260B, 8270C, 3570, 8015B.)

Atmospheric Organic Parameters (EPA TO-15)

Biological Tissue (Inorganic Parameters: SW-846 6020 Organic Parameters: SW-846 8270C, 3510C, 3570, 3610B, 3630C, 3640A)

New York Department of Health Certificate/Lab ID: 11627. ***NELAP Accredited.***

Non-Potable Water (Inorganic Parameters: EPA 310.1, SM2320B, EPA 365.2, 160.1, EPA 160.2, SM2540D, EPA 200.8, 6020, 1631E, 245.1, 335.2, 9014, 150.1, 9040B, 120.1, SM2510B, EPA 376.2, 180.1, 9010B. Organic Parameters: EPA 624, 8260B, 8270C, 608, 8081A, 625, 8082, 3510C, 3511, 5030B.)

Solid & Hazardous Waste (Inorganic Parameters: EPA 9040B, 9045C, SW-846 Ch7 Sec 7.3, EPA 6020, 7196A, 7471A, 7474, 9014, 9040B, 9045C, 9010B. Organic Parameters: EPA 8260B, 8270C, 8081A, DRO 8015B, 8082, 1311, 3050B, 3580, 3050B, 3035, 3570, 3051, 5035, 5030B.)

Air & Emissions (EPA TO-15.)

Pennsylvania Department of Environmental Protection Certificate/Lab ID: 68-02089. ***NELAP Accredited.***

Non-Potable Water (Organic Parameters: EPA 5030B, EPA 8260)

Rhode Island Department of Health Certificate/Lab ID: LAO00299. ***NELAP Accredited via LA-DEQ.***

Refer to MA-DEP Certificate for Non-Potable Water.

Refer to LA-DEQ Certificate for Non-Potable Water.

Texas Commission of Environmental Quality Certificate/Lab ID: T104704419-08-TX. ***NELAP Accredited.***

Solid & Chemical Materials (Inorganic Parameters: EPA 6020, 7470, 7471, 1311, 7196, 9014, 9040, 9045, 9060. Organic Parameters: EPA 8015, 8270, 8260, 8081, 8082.)

U.S. Army Corps of Engineers

Department of Defense Certificate/Lab ID: L2217.01.

Non-Potable Water (Inorganic Parameters: EPA 3005A,3020, 6020, 245.1, 245.7, 1631E, 7470A, 7474, 9014, 120.1, 9050A, 180.1, SM4500H-B, 2320B, 2510B, 2540D,9040. Organic Parameters: EPA 3510C, 5030B, 9010B, 624, 8260B, 8270C, 8270 Alk-PAH, 8082, 8081A, 8015 (SHC), 8015 (DRO).)

Solid & Hazardous Waste (Inorganic Parameters: EPA 1311, 1312,3051, 6020, 747A, 7474, 9045C,9060, SM 2540G, ASTM D422-63. Organic Parameters: EPA 3580, 3570, 3540C, 5035, 8260B, 8270C, 8270 Alk-PAH, 8082, 8081A, 8015 (SHC), 8015 (DRO).

Air & Emissions (EPA TO-15.)

Analytes Not Accredited by NELAP
Certification is not available by NELAP for the following analytes: **8270C:** Biphenyl.

AIR ANALYSIS

PAGE 1 OF 3

ALPHA ANALYTICAL — *CHAIN OF CUSTODY*

320 Forbes Blvd, Mansfield, MA 02048
TEL: 508-822-9300 FAX: 508-822-3288

Date Rec'd in Lab:

ALPHA Job #: L1004721

Client Information

Client: Johnson Company
Address:
Phone:
Fax:
Email:
☐ These samples have been previously analyzed by Alpha

Project Information

Project Name: Unifirst / Wells G&H
Project Location:
Project #:
Project Manager: Bob Osborne
ALPHA Quote #:

Turn-Around Time

☐ Standard ☐ RUSH (only confirmed if pre-approved!)
Date Due: Time:

Report Information - Data Deliverables

☐ FAX
☐ ADEx
Criteria Checker:
(Default based on Regulatory Criteria Indicated)
Other Formats:
☐ EMAIL (standard pdf report)
☐ Additional Deliverables:
Report to: (if different than Project Manager)

Billing Information

☐ Same as Client info PO #:

Regulatory Requirements/Report Limits

State/Fed	Program	Criteria

Other Project Specific Requirements/Comments:

All Columns Below Must Be Filled Out

ALPHA Lab ID (Lab Use Only)	Sample ID	Collection Date	Start Time	End Time	Initial Vacuum	Final Vacuum	Sample Matrix*	Sampler's Initials	Can Size	I D Can	I D - Flow Controller	TO-14A by TO-15	TO-15	TO-15 SIM	APH	FIXED GASES	TO-13A	TO-4 / TO-10	Sample Comments (i.e. PID)
1004721-01	Can 785 FC 298	4/2/10					AA							✓	✓				
~~-02~~	~~Can 923 FC 432~~															(LB)	4/8/10		
-03	Can 1559 FC 074																		
-04	Can 945 FC 256																		
-05	Can 762 FC 233																		
-06	Can 1707 FC 356																		
-07	Can 983 FC 349																		
-08	Can 618 FC 047																		
-09	Can 1667 FC 379																		
-10	Can 584 FC 081																		

*SAMPLE MATRIX CODES
AA = Ambient Air (Indoor/Outdoor)
SV = Soil Vapor/Landfill Gas/SVE
Other = Please Specify

Container Type

Relinquished By:	Date/Time	Received By:	Date/Time:
Rie Bu	4/6/10		

Please print clearly, legibly and completely. Samples can not be logged in and turnaround time clock will not start until any ambiguities are resolved. All samples submitted are subject to Alpha's Terms and Conditions. See reverse side.

Form No: 101-02 (19-Jun-09)

04291023:32

AIR ANALYSIS

PAGE 2 OF 3

ALPHA ANALYTICAL — *CHAIN OF CUSTODY*

320 Forbes Blvd, Mansfield, MA 02048
TEL: 508-822-9300 FAX: 508-822-3288

Date Rec'd in Lab:

ALPHA Job #: L1004721

Client Information

Client: Johnson Company
Address:
Phone:
Fax:
Email:
☐ These samples have been previously analyzed by Alpha

Project Information

Project Name: Unifirst / Wells 6th
Project Location:
Project #:
Project Manager:
ALPHA Quote #:

Turn-Around Time

☐ Standard ☐ RUSH (only confirmed if pre-approved!)

Date Due: Time:

Report Information - Data Deliverables

☐ FAX
☐ ADEx
Criteria Checker:
(Default based on Regulatory Criteria Indicated)
Other Formats:
☐ EMAIL (standard pdf report)
☐ Additional Deliverables:
Report to: (if different than Project Manager)

Billing Information

☐ Same as Client info PO #:

Regulatory Requirements/Report Limits

State/Fed	Program	Criteria

Other Project Specific Requirements/Comments:

All Columns Below Must Be Filled Out

ALPHA Lab ID (Lab Use Only)	Sample ID	Collection Date	Start Time	End Time	Initial Vacuum	Final Vacuum	Sample Matrix*	Sampler's Initials	Can Size	I D Can	I D - Flow Controller	TO-14A by TO-15	TO-15	TO-15 SIM	APH	FIXED GASES	TO-13A	TO-4 / TO-10	Sample Comments (i.e. PID)
1004721-11	Con 1036 FC 333	4/2/10					AA							X	X				
-12	Con 782 FC 175	↓					↓							↓	↓				
-13	Con 1628 FC 360	4/1/10					SU												
-14	Con 972 FC 277	4/6/10					AA												
-15	Con 1690 FC 028	↓					↓												
-16	Con 1614 FC 309																		
-17	Con 639 FC 231																		
-18	Con 1566 FC 262																		
-19	Con 1626 FC 002																		
-20	Con 695 FC 290	↓					↓							↓	↓				

*SAMPLE MATRIX CODES
AA = Ambient Air (Indoor/Outdoor)
SV = Soil Vapor/Landfill Gas/SVE
Other = Please Specify

Container Type

Relinquished By:	Date/Time	Received By:	Date/Time:
Lin Bere	4/6/10		

Please print clearly, legibly and completely. Samples can not be logged in and turnaround time clock will not start until any ambiguities are resolved. All samples submitted are subject to Alpha's Terms and Conditions. See reverse side.

Form No: 101-02 (19-Jun-09)

04291023:32

AIR ANALYSIS

PAGE 3 OF 3

ALPHA ANALYTICAL

CHAIN OF CUSTODY

320 Forbes Blvd, Mansfield, MA 02048
TEL: 508-822-9300 FAX: 508-822-3288

Date Rec'd in Lab:

ALPHA Job #: L1004721

Client Information

Client: Johnson Company

Address:

Phone:

Fax:

Email:

☐ These samples have been previously analyzed by Alpha

Project Information

Project Name: Uniform / Wells G & H

Project Location:

Project #:

Project Manager: Bob Osborne

ALPHA Quote #:

Turn-Around Time

☐ Standard ☐ RUSH (only confirmed if pre-approved!)

Date Due: Time:

Report Information - Data Deliverables

☐ FAX
☐ ADEx
Criteria Checker:
(Default based on Regulatory Criteria Indicated)
Other Formats:
☐ EMAIL (standard pdf report)
☐ Additional Deliverables:

Report to: (if different than Project Manager)

Billing Information

☐ Same as Client info PO #:

Regulatory Requirements/Report Limits

State/Fed	Program	Criteria

Other Project Specific Requirements/Comments:

All Columns Below Must Be Filled Out

ALPHA Lab ID (Lab Use Only)	Sample ID	Collection Date	Start Time	End Time	Initial Vacuum	Final Vacuum	Sample Matrix*	Sampler's Initials	Can Size	I D Can	I D - Flow Controller	TO-14A by TO-15	TO-15	TO-15 SIM	APH	FIXED GASES	TO-13A	TO-4 / TO-10	Sample Comments (i.e. PID)
L1004721-21	Can 609 FC 183	4/6/10					AA							✓	✓				
-22	Can 1676 FC 205	↓					↓							↓	↓				
-23	Can 986 FC 406	↓					↓							↓	↓				
-24	Can 1704 FC 369	↓					↓							↓	↓				
-25	Can 949 FC 242	↓					↓							↓	↓				

*SAMPLE MATRIX CODES
AA = Ambient Air (Indoor/Outdoor)
SV = Soil Vapor/Landfill Gas/SVE
Other = Please Specify

Container Type

Relinquished By:	Date/Time	Received By:	Date/Time:
Kim Bu	4/6/10		

Please print clearly, legibly and completely. Samples can not be logged in and turnaround time clock will not start until any ambiguities are resolved. All samples submitted are subject to Alpha's Terms and Conditions. See reverse side.

Form No: 101-02 (19-Jun-09)

04291023:32

Certificate/Approval Program Summary

Last revised December 15, 2009 – Mansfield Facility

The following list includes only those analytes/methods for which certification/approval is currently held.
For a complete listing of analytes for the referenced methods, please contact your Alpha Customer Service Representative.

Connecticut Department of Public Health Certificate/Lab ID: PH-0141.

Wastewater/Non-Potable Water (Inorganic Parameters: pH, Turbidity, Conductivity, Alkalinity, Aluminum, Antimony, Arsenic, Barium, Beryllium, Boron, Cadmium, Calcium, Chromium, Cobalt, Copper, Iron, Lead, Magnesium, Manganese, Mercury, Molybdenum, Nickel, Potassium, Selenium, Silver, Sodium, Strontium, Thallium, Tin, Vanadium, Zinc, Total Residue (Solids), Total Suspended Solids (non-filterable), Total Cyanide. Organic Parameters: PCBs, Organochlorine Pesticides, Technical Chlordane, Toxaphene, Acid Extractables, Benzidines, Phthalate Esters, Nitrosamines, Nitroaromatics & Isophorone, PAHs, Haloethers, Chlorinated Hydrocarbons, Volatile Organics.)

Solid Waste/Soil (Inorganic Parameters: pH, Aluminum, Antimony, Arsenic, Barium, Beryllium, Cadmium, Calcium, Chromium, Hexavalent Chromium, Cobalt, Copper, Iron, Lead, Magnesium, Manganese, Mercury, Molybdenum, Nickel, Potassium, Selenium, Silver, Sodium, Thallium, Vanadium, Zinc, Total Organic Carbon, Total Cyanide, Corrosivity, TCLP 1311. Organic Parameters: PCBs, Organochlorine Pesticides, Technical Chlordane, Toxaphene, Volatile Organics, Acid Extractables, Benzidines, Phthalates, Nitrosamines, Nitroaromatics & Cyclic Ketones, PAHs, Haloethers, Chlorinated Hydrocarbons.)

Florida Department of Health Certificate/Lab ID: E87814. ***NELAP Accredited.***

Non-Potable Water (Inorganic Parameters: SM2320B, EPA 120.1, SM2510B, EPA 245.1, EPA 150.1, EPA 160.2, SM2540D, EPA 335.2, SM2540G, EPA 180.1. Organic Parameters: EPA 625, 608.)

Solid & Chemical Materials (Inorganic Parameters: 6020, 7470, 7471, 9045, 9014. Organic Parameters: EPA 8260, 8270, 8082, 8081.)

Air & Emissions (EPA TO-15.)

Louisiana Department of Environmental Quality Certificate/Lab ID: 03090. ***NELAP Accredited.***

Non-Potable Water (Inorganic Parameters: EPA 120.1, 150.1, 160.2, 180.1, 200.8, 245.1, 310.1, 335.2, 608, 625, 1631, 3010, 3015, 3020, 6020, 9010, 9014, 9040, SM2320B, 2510B, 2540D, 2540G, 4500CN-E, 4500H-B, Organic Parameters: EPA 3510, 3580, 3630, 3640, 3660, 3665, 5030, 8015 (mod), 3570, 8081, 8082, 8260, 8270,)

Solid & Chemical Materials (Inorganic Parameters: 6020, 7196, 7470, 7471, 7474, 9010, 9014, 9040, 9045, 9060. Organic Parameters: EPA 8015 (mod), EPA 3570, 1311, 3050, 3051, 3060, 3580, 3630, 3640, 3660, 3665, 5035, 8081, 8082, 8260, 8270.)

Biological Tissue (Inorganic Parameters: EPA 6020. Organic Parameters: EPA 3570, 3510, 3610, 3630, 3640, 8270.)

Maine Department of Human Services Certificate/Lab ID: MA0030.

Wastewater (Inorganic Parameters: EPA 120.1, 300.0, SM 2320, 2510B, 2540C, 2540D, EPA 245.1. Organic Parameters: 608, 624.)

Massachusetts Department of Environmental Protection Certificate/Lab ID: M-MA030.

Non-Potable Water (Inorganic Parameters: SM4500H+B. Organic Parameters: EPA 624.)

New Hampshire Department of Environmental Services Certificate/Lab ID: 2206. ***NELAP Accredited.***

Non-Potable Water (Inorganic Parameters: EPA 200.8, 245.1, 1631E, 120.1, 150.1, 180.1, 310.1, 335.2, 160.2, SM2540D, 2540G, 4500CN-E, 4500H+B, 2320B, 2510B. Organic Parameters: EPA 625, 608.)

New Jersey Department of Environmental Protection Certificate/Lab ID: MA015. ***NELAP Accredited.***

Non-Potable Water (Inorganic Parameters: SW-846 1312, 3010, 3020A, 3015, 6020, SM2320B, EPA 200.8, SM2540C, 2540D, 2540G, EPA 120.1, SM2510B, EPA 180.1, 245.1, 1631E, SW-846 9040B, 6020, 9010B, 9014 Organic Parameters: EPA 608, 625, SW-846 3510C, 3580A, 5030B, 3035L, 5035H, 3630C, 3640A, 3660B, 3665A, 8081A, 8082 8260B, 8270C)

Solid & Chemical Materials (Inorganic Parameters: SW-846 6020, 9010B, 9014, 1311, 1312, 3050B, 3051, 3060A, 7196A, 7470A, 7471A, 9045C, 9060. Organic Parameters: SW-846 3580A, 5030B, 3035L, 5035H, 3630C, 3640A, 3660B, 3665A, 8081A, 8082, 8260B, 8270C, 3570, 8015B.)

Atmospheric Organic Parameters (EPA TO-15)

Biological Tissue (Inorganic Parameters: SW-846 6020 Organic Parameters: SW-846 8270C, 3510C, 3570, 3610B, 3630C, 3640A)

New York Department of Health Certificate/Lab ID: 11627. ***NELAP Accredited.***

Non-Potable Water (Inorganic Parameters: EPA 310.1, SM2320B, EPA 365.2, 160.1, EPA 160.2, SM2540D, EPA 200.8, 6020, 1631E, 245.1, 335.2, 9014, 150.1, 9040B, 120.1, SM2510B, EPA 376.2, 180.1, 9010B. Organic Parameters: EPA 624, 8260B, 8270C, 608, 8081A, 625, 8082, 3510C, 3511, 5030B.)

Solid & Hazardous Waste (Inorganic Parameters: EPA 9040B, 9045C, SW-846 Ch7 Sec 7.3, EPA 6020, 7196A, 7471A, 7474, 9014, 9040B, 9045C, 9010B. Organic Parameters: EPA 8260B, 8270C, 8081A, DRO 8015B, 8082, 1311, 3050B, 3580, 3050B, 3035, 3570, 3051, 5035, 5030B.)

Air & Emissions (EPA TO-15.)

Pennsylvania Department of Environmental Protection Certificate/Lab ID: 68-02089. ***NELAP Accredited.***

Non-Potable Water (Organic Parameters: EPA 5030B, EPA 8260)

Rhode Island Department of Health Certificate/Lab ID: LAO00299. ***NELAP Accredited via LA-DEQ.***

Refer to MA-DEP Certificate for Non-Potable Water.

Refer to LA-DEQ Certificate for Non-Potable Water.

Texas Commission of Environmental Quality Certificate/Lab ID: T104704419-08-TX. ***NELAP Accredited.***

Solid & Chemical Materials (Inorganic Parameters: EPA 6020, 7470, 7471, 1311, 7196, 9014, 9040, 9045, 9060. Organic Parameters: EPA 8015, 8270, 8260, 8081, 8082.)

U.S. Army Corps of Engineers

Department of Defense Certificate/Lab ID: L2217.01.

Non-Potable Water (Inorganic Parameters: EPA 3005A,3020, 6020, 245.1, 245.7, 1631E, 7470A, 7474, 9014, 120.1, 9050A, 180.1, SM4500H-B, 2320B, 2510B, 2540D,9040. Organic Parameters: EPA 3510C, 5030B, 9010B, 624, 8260B, 8270C, 8270 Alk-PAH, 8082, 8081A, 8015 (SHC), 8015 (DRO).)

Solid & Hazardous Waste (Inorganic Parameters: EPA 1311, 1312,3051, 6020, 747A, 7474, 9045C,9060, SM 2540G, ASTM D422-63. Organic Parameters: EPA 3580, 3570, 3540C, 5035, 8260B, 8270C, 8270 Alk-PAH, 8082, 8081A, 8015 (SHC), 8015 (DRO).

Air & Emissions (EPA TO-15.)

Analytes Not Accredited by NELAP
Certification is not available by NELAP for the following analytes: **8270C:** Biphenyl.

CHAIN OF CUSTODY RECORD

L1005229- 7390

Client / Project Name	Project Location
UniFirst Property IAQ/VI Assessment	Woburn, MA
Project No.	**Field Logbook No.**
1-2114-2	Field Forms/Notes
Sampler: (Signature)	**Chain of Custody Tape No.**
[signature]	—

ANALYZES: Compound List for Woburn; MA APH

Please Fax a copy to Bethna (802) 229-5876

Sample No. / Identification	Date	Time	Lab Sample Number (*)		Type of Sample	TO-15 SIM	MA APH	Digital Pressure Gauge Reading - Leaving LAB	Digital Pressure Gauge Reading - Receipt at Site	Digital Pressure Gauge Reading - Leaving SITE	Digital Pressure Gauge Reading - Receipt at LAB	REMARKS
-1 IA-12	4/11-12/10	1858-0258	Can 785	FC 298	IA Ambient	X	X	-29.3	-30.0	-4.8	-4.3	Analyte List/QAP
-2 IA-04	4/11-12/10	1835-0235	1559	074	Ambient	X	X	-29.3	-30.0	-2.6	-2.1	
-3 IA-14	4/11-12/10	1833-0140	945	256	Ambient	X	X	-29.3	-30.0	-5.6	-4.4	
-4 OA-03	4/11-12/10	1811-0212	762	233	Ambient	X	X	-29.3	-30.1	-6.3	-5.1	
-5 IA-10A	4/11-12/10	1840-0230	1707	356	Ambient	X	X	-29.3	-30.0	-4.3	-3.8	
-6 IA-11	4/11-12/10	1846-0218	983	349	Ambient	X	X	-29.3	-30.1	-3.9	-3.1	
-7 IA-Dup02	4/11-12/10	1856-0228	618	047	Ambient	X	X	-29.3	-29.8	-3.8	-3.2	
-8 IA-09	4/11-12/10	1829-0110	1667	379	Ambient	X	X	-29.3	-30.1	-5.5	-4.2	
-9 IA-08	4/11-12/10	1907-0155	584	081	Ambient	X	X	-29.3	-30.0	-6.4	-5.0	
			~~1036~~	~~333~~	~~Ambient~~ TICO 4/11/10			~~-29.3~~	~~-30.0~~			

Relinquished by: (Signature)	Date	Time	Received by: (Signature)	Date	Time
LAB to FIELD [signature] 4/11/10	4/11/10	1205	Receipt at Site [signature]	4/11/10	1205
Relinquished by: (Signature) FIELD to LAB [signature]	4/12/10	14:15	Received for Laboratory: (Signature) T Fley	4/12/10	1415
Sample Disposal Method: Ret. to Client			Disposed of by: (Signature)	Date	Time

SAMPLE COLLECTOR
Rec: P. Gilbert 4/12/10 14:55

THE JOHNSON COMPANY, INC.
100 State Street, Suite 600
Montpelier, VT 05602
(802) 229-4600
Fax (802) 229-5876
Environmental Sciences and Engineering

Rel: P. Gilbert 4/12/10 16:00 Rec'd [signature] 4/12/10 16:00

ANALYTICAL LABORATORY
Alpha Analytical, Inc.
Mansfield, MA

(*) = Canister ID / Flow controller Numbers

Shipper ID # JCO Drum

Barometric Pressure 4/8/10 - 29.75; 4/9/10 29.67; 4/11/10 30.11

WHITE - To accompany sample to the lab and returned to the Johnson Co. YELLOW - Lab copy PINK - Transporter copy GOLD - Sampler copy

Reorder from NEBS CUSTOM printing service 1-800-888-6327 NEBS, Inc. Petersborough, NH 03458 www.nebs.com
Ref. No: G 164100504

CHAIN OF CUSTODY RECORD

L1005229 7391

04291013:17

Client / Project Name	Project Location
Unifirst Property IAQ/VI Assessment	Woburn, MA
Project No.	**Field Logbook No.**
1-2114-2	Field Forms/Notes
Sampler: (Signature)	**Chain of Custody Tape No.**
[signature]	—

ANALYZES

Please Fax a copy to Bettina (802) 229-5876

	Sample No. / Identification	Date	Time	Lab Sample Number (*)	Type of Sample	TO-15 SIM (Compound List for Woburn)	MA APH	Digital Pressure Gauge Reading - Leaving LAB	Digital Pressure Gauge Reading - Receipt at SITE	Digital Pressure Gauge Reading - Leaving SITE	Digital Pressure Gauge Reading - Receipt at LAB	REMARKS
10	IA-05	4/11-12/10	1856-0206	Can 1036 FC 333	Ambient	X	X	-29.3	-30.1	-6.7	-5.6	Analyte List/CAPH
11	OA-01	4/11-12/10	1801-0100	782 175	Ambient	X	X	-29.3	-29.4	-6.3	-5.1	
12	SV-07	4/12/10	0418-0506	1628 360	Soil Vapor	X	X	-29.5	-29.7	-2.9	-2.7	
13	IA-13	4/11-12/10	1844-0246	972 277	Ambient	X	X	-29.3	-30.1	-6.0	-5.2	
14	OA-02	4/11-12/10	1809-0137	1690 028	Ambient	X	X	-29.3	-30.2	-5.7	-4.7	
15	IA-Dup 01	4/11/12/10	1854-0256	1614 309	Ambient	X	X	-29.3	-30.1	-5.0	-4.1	
16	IA-06	4/11-12/10	1900-0230	639 231	Ambient	X	X	-29.3	-30.1	-5.4	-4.8	
17	OA-DUP1	4/11-12/10	1819-0147	1566 262	Ambient	X	X	-29.3	-30.1	-6.0	-5.0	
18	IA-15	4/11-12/10	1809-0209	1626 002	Ambient	X	X	-29.3	-30.0	-4.6	-3.9	
19	IA-01	4/11-12/10	1825-0039	645 290	Ambient	X	X	-29.3	-30.2	-0.6	0.6	

Relinquished by: (Signature)	Date	Time	Received by: (Signature)	Date	Time
LAB to FIELD [signature] 4/11/10	4/11/10	1205	Receipt at SITE [signature]	4/11/10	1205
Relinquished by: (Signature) FIELD to LAB [signature]	4/12/10	14:15	Received for Laboratory: (Signature) L. Fray	4/12/10	1415
Sample Disposal Method: Relinquished L. Fray			Disposed of by: (Signature)	Date	Time

SAMPLE COLLECTOR: Rec: P. Gilbert 4/12/10 14:55

100 State Street, Suite 600
Montpelier, VT 05602
(802) 229-4600
Fax (802) 229-5876
THE JOHNSON COMPANY, INC.
Environmental Sciences and Engineering

Rel: P. Gilbert 4/12/10 16:00 Rec'd [signature] 4/12/10 1600

ANALYTICAL LABORATORY: Alpha Analytical, Inc. Mansfield, MA

(*) = Canister ID / Flow controller Numbers

Shipper ID # JCO Drop

WHITE - To accompany sample to the lab and returned to the Johnson Co. YELLOW - Lab copy PINK - Transporter copy GOLD - Sampler copy

Reorder From NEBS CUSTOM™ printing service 1-800-883-6327 NEBS, Inc. Peterborough, NH 03458 www.nebs.com

CHAIN OF CUSTODY RECORD

L1005229 7392

04291013:17

Client / Project Name	Project Location
Unifirst Property IAQ/VI Assessment	Woburn, MA
Project No. 1-2114-2	**Field Logbook No.** Field Forms / Notes
Sampler: (Signature)	**Chain of Custody Tape No.**

ANALYZES: Compound List for Woburn; TO-15 SIM; MA APH; Digital Pressure Gauge Reading - Leaving LAB; Digital Pressure Gauge Reading - Receipt at SITE; Digital Pressure Gauge Reading - Leaving SITE; Digital Pressure Gauge Reading - Receipt at LAB

Please Fax a copy to Bethina (802) 229-5876

	Sample No. / Identification	Date	Time	Lab Sample Number (*)		Type of Sample	TO-15	SIM	MA APH	Digital Pressure Gauge Reading - Leaving LAB	Digital Pressure Gauge Reading - Receipt at SITE	Digital Pressure Gauge Reading - Leaving SITE	Digital Pressure Gauge Reading - Receipt at LAB	REMARKS
20	IA-3A	4/11-12/10	1844-0246	Can 609	FC 183	Ambient	X	X		-29.3	-30.1	-5.6	-4.8	Analyte List / APH
21	IA-10	4/11-12/10	1840-0207	1676	205	Ambient	X	X		-29.3	-30.1	-4.1	-3.8	
22	IA-03	4/11-12/10	1831-0201	986	406	Ambient	X	X		-29.3	-30.1	-4.4	-3.2	
23	IA-07	4/11-12/10	1904-0236	1704	369	Ambient	X	X		-29.3	-30.1	-6.5	-5.4	
24	IA-02	4/11-12/10	1927-0222	944	242 1A	Ambient	X	X		-29.3	-30.1	-5.2	-4.2	
25	SV-04	4/12/10	0415-0507	652	466	Soil Vapor	X	X		-29.2	-30.0	-3.84	-2.4	
26	SV-14	4/12/10	0407-0455	998	045	Soil Vapor	X	X		-29.2	-30.0	-5.3	-3.9	
27	SV-Dup01	4/12/10	0514-0559	1706	291	Soil Vapor	X	X		-29.2	-30.0	-4.8	-4.6	
28	SV-13	4/12/10	0504-0549	1692	368	Soil Vapor	X	X		-29.2	-30.0	-7.8	-7.2	
29	SV-03	4/12/10	0402-0448	965	367	Soil Vapor	X	X		-29.2	-30.0	-5.41	-4.2	

Relinquished by: (Signature)	Date	Time	Received by: (Signature)	Date	Time
LAB to FIELD 4/11/10	4/11/10	1205	Receipt at SITE	4/11/10	12:05
Relinquished by: (Signature) FIELD to LAB	4/12/10	14:15	Received for Laboratory: (Signature)	4/12/10	1415
~~Sample Disposal Method:~~ Relinquished			Disposed of by: (Signature)	Date	Time

SAMPLE COLLECTOR
Rec: P. Gilbert 4/12/10 14:55
Rel: P. Gilbert 4/12/10 16:00 Rec 4/12/10 1600

100 State Street, Suite 600
Montpelier, VT 05602
(802) 229-4600
Fax (802) 229-5876
THE JOHNSON COMPANY, INC.
Environmental Sciences and Engineering

ANALYTICAL LABORATORY
Alpha Analytical, Inc.
Mansfield, MA

(*) Canister ID / Flow Controller Numbers

Shipper ID # JCO Prop

WHITE - To accompany sample to the lab and returned to the Johnson Co. YELLOW - Lab copy PINK - Transporter copy GOLD - Sampler copy

Reorder From NEBS CUSTOM printing service 1-800-888-6307 NEBS, Inc. Peterborough, NH 03458 www.nebs.com

Ref. No. G 164100.504

CHAIN OF CUSTODY RECORD

L1005229 7393

04291012:17

Client / Project Name	Project Location
UniFirst Property IAQ/VI Assessment	Woburn, MA
Project No.	**Field Logbook No.**
1-2114-2	Field Forms/Notes
Sampler: (Signature)	**Chain of Custody Tape No.**
[signature]	—

ANALYZES: Compound List for Woburn; Please Fax a Copy to Bethina (802)229-5876

Sample No. / Identification	Date	Time	Lab Sample Number (*)	Type of Sample	TO-15 SIM	MA APH	Digital Pressure Gauge Reading - Leaving Lab	Digital Pressure Gauge Reading - Receipt at Site	Digital Pressure Gauge Reading - Leaving SITE	Digital Pressure Gauge Reading - Receipt at LAB	REMARKS
30 SV-15	4/12/10	0540-0626	CAN 587 FC 465	Soil Vapor	X	X	-29.3	-30.0	-6.1	-5.6	Analyte List/QAPP
31 SV-12	4/12/10	0458-0524	956 019	Soil Vapor	X	X	-29.2	-30.0	-6.2	-5.6	↓ ↓
32 SV-05	4/12/10	0425-0515	1520 463	Soil Vapor	X	X	-29.2	-30.0	-2.7	-2.5	↓ ↓
33 SV-10	4/12/10	0421-0514	764 257	Soil Vapor	X	X	-29.2	-30.0	-1.6	-1.3	↓ ↓
42 —	—	—	1053 269	Soil Vapor			-29.2	-30.0	-28.4'		Faulty Regulator
34 SV-DUP02	4/12/10	0522-0612	1633 208	Soil Vapor	X	X	-29.2	-30.0	-17.4	-17.1	↓ ↓
35 SV-09	4/12/10	0359-0447	1655 275	Soil Vapor	X	X	-29.3	-30.0	-5.47	-4.1	↓ ↓
43 —	—	—	969 158	Soil Vapor			-29.2	-30.0			Extra
36 SV-01	4/12/10	0348-0437	696 303	Soil Vapor	X	X	-29.2	-30.0	-4.8	-3.5	↓ ↓
44 —	—	—	1562 166	Soil Vapor			-29.1	-29.9			Extra

Relinquished by: (Signature)	Date	Time	Received by: (Signature)	Date	Time
LAB to FIELD [signature] 4/11/10	4/11/10	1205	Receipt at SITE [signature]	4/11/10	12:05
Relinquished by: (Signature) FIELD to LAB [signature]	4/12/10	14:15	Received for Laboratory: (Signature) [signature]	4/12/10	1415
~~Sample Disposal Method:~~ Rel. [signature]			Disposed of by: (Signature)	Date	Time

SAMPLE COLLECTOR
Reli P. Gilbert 4/12/10 14:55
100 State Street, Suite 600
Montpelier, VT 05602
(802) 229-4600
Fax (802) 229-5876
THE JOHNSON COMPANY, INC.
Environmental Sciences and Engineering
Reli P. Gilbert 4/12/10 16:00
Rec'd [signature] 4/14/10 1600

ANALYTICAL LABORATORY
Alpha Analytical, Inc.
Mansfield, MA

(*) = Canister ID / Flow Controller Numbers

Shipper ID # JCO Prop

WHITE - To accompany sample to the lab and returned to the Johnson Co. YELLOW - Lab copy PINK - Transporter copy GOLD - Sampler copy

Reorder From NEBS CUSTOM printing service 1-800-888-8327 NEBS, Inc. Petoborough, NH 03458 www.nebs.com

Ref. No: B 10410050

CHAIN OF CUSTODY RECORD

L1005229 7394

Client / Project Name	Project Location
UniFirst Property IAQ/VI Assessment	Woburn, MA
Project No. 1-2114-2	**Field Logbook No.** Field Forms / Notes
Sampler: (Signature)	**Chain of Custody Tape No.** —

ANALYZES: TO-15 SIM; MA APH; Compound List for Woburn

Please Fax copy to Bettina (802) 229-5876

Sample No. / Identification	Date	Time	Lab Sample Number (*)	Type of Sample	TO-15 SIM	MA APH	Digital Pressure Gauge Reading - Leaving LAB	Digital Pressure Gauge Reading - Receipt at SITE	Digital Pressure Gauge Reading - Leaving SITE	Digital Pressure Gauge Reading - Receipt at LAB	REMARKS
SV-08	4/12/10 (TEH 4/11/10)	0545-0632	Can 1576 FC 343	Soil Vapor	X	X	-29.3	-29.9	-7.7	-6.6	Analyte List/QAPP
Trip Blank	—	—	932 332	~~Soil~~ (TEH 4/11/10)	X	X	-29.2	-30.0	-30.3	-30.0	
SV-06	4/12/10	0435-0522	1646 090	Soil Vapor	X	X	-29.3	-29.6	-4.8	-4.6	
SV-02	4/12/10	0646-0755	963 451	Soil Vapor	X	X	-29.2	-30.0	-21.7	-21.1	
SV-11	4/12/10	0512-0602	1556 390	Soil Vapor	X	X	-29.3	-30.0	-3.3	-3.1	

Relinquished by: (Signature)	Date	Time	Received by: (Signature)	Date	Time
LAB to FIELD 4/11/10	4/11/10	1205	Receipt at SITE	4/11/10	1205
Relinquished by: (Signature) FIELD to LAB	4/12/10	14:15	Received for Laboratory: (Signature)	4/12/10	1415
Sample ~~Disposal Method:~~ Rel.			Disposed of by: (Signature)	Date	Time

SAMPLE COLLECTOR
Rec: P. Gillett 4/12/10 14:55

100 State Street, Suite 600
Montpelier, VT 05602
(802) 229-4600
Fax (802) 229-5876
THE JOHNSON COMPANY, INC.
Environmental Sciences and Engineering

Rel: P. Gillett 4/12/10 16:00 Rec'd 4/12/10 16:00

ANALYTICAL LABORATORY
Alpha Analytical, Inc.
Mansfield, MA

(*) = Canister ID / Flow Controller Numbers

Shipper ID # JCO Prop

WHITE - To accompany sample to the lab and returned to the Johnson Co. YELLOW - Lab copy PINK - Transporter copy GOLD - Sampler copy

Reorder From NEBS CUSTOM printing service 1-800-886-6327 NEBS, Inc. Peterborough, NH 03458 www.nebs.com
Ref. No: © 1041300504

Table 1
Proposed Analyte List for Sub-Slab Vapor and Ambient Air Samples
UniFirst Corporation
Woburn, Massachusetts

Analyte	Analytical Method[1]	Laboratory Target Reporting Limit	USEPA-Proposed Screening Level[2]
Chloroform	TO-15 SIM	0.098 μg/m^3	0.11 μg/m^3
1,1-Dichloroethane	TO-15 SIM	0.081 μg/m^3	1.52 μg/m^3
1,2-Dichloroethane	TO-15 SIM	0.081 μg/m^3	0.094 μg/m^3
1,1-Dichloroethene	TO-15 SIM	0.079 μg/m^3	20 μg/m^3
Tetrachloroethene	TO-15 SIM	0.136 μg/m^3	0.41 μg/m^3
Trichloroethene	TO-15 SIM	0.107 μg/m^3	1.22 μg/m^3
Vinyl chloride	TO-15 SIM	0.051 μg/m^3	0.16 μg/m^3
trans-1,2-Dichloroethene	TO-15 SIM	0.079 μg/m^3	6.0 μg/m^3
cis-1,2-Dichloroethene	TO-15 SIM	0.079 μg/m^3	None (0.5 μg/m^3)
1,1,1-Trichloroethane	TO-15 SIM	0.109 μg/m^3	500 μg/m^3
Methylene chloride	TO-15 SIM	1.740 μg/m^3	5.18 μg/m^3
Carbon tetrachloride	TO-15 SIM	0.126 μg/m^3	0.16 μg/m^3
Xylenes	TO-15 SIM	0.06 μg/m^3	10 μg/m^3
Toluene	TO-15SIM	0.188 μg/m^3	500 μg/m^3
1,2-Dibromoethane (EDB)	TO-15 SIM	0.154 μg/m^3	0.0041 μg/m^3
Benzene	TO-15 SIM	0.223 μg/m^3	0.31 μg/m^3
Bromoform	TO-15 SIM	0.207 μg/m^3	2.21 μg/m^3
Ethylbenzene	TO-15 SIM	0.087 μg/m^3	0.97 μg/m^3
IsoPropylbenzene (Cumene)	TO-15 SIM	2.460 μg/m^3	40 μg/m^3
trans-1,3-Dichloropropene	TO-15 SIM	0.091 μg/m^3	0.61 μg/m^3
Naphthalene	TO-15 SIM	0.262 μg/m^3	0.072 μg/m^3
1,3-Butadiene	TO-15 SIM	0.044 μg/m^3	0.081 μg/m^3
Methyl tert-butyl ether (MTBE)	TO-15 SIM	0.072 μg/m^3	9.4 μg/m^3
1,1,2-Trichloroethane	TO-15 SIM	0.109 μg/m^3	0.15 μg/m^3
1,2,4-Trimethylbenzene	TO-15 SIM	0.098 μg/m^3	0.70 μg/m^3
1,2-Dichloropropane	TO-15 SIM	0.092 μg/m^3	0.24 μg/m^3
1,3-Dichlorobenzene	TO-15 SIM	0.12 μg/m^3	None (0.5 μg/m^3)
1,4-Dichlorobenzene	TO-15 SIM	0.12 μg/m^3	0.22 μg/m^3
Bromodichloromethane	TO-15 SIM	0.134 μg/m^3	0.066 μg/m^3
Chlorobenzene	TO-15 SIM	0.092 μg/m^3	5.0 μg/m^3
C5-C8 Aliphatic Hydrocarbons	MA APH	12 μg/m^3	63 μg/m^3
C9-C12 Aliphatic Hydrocarbons	MA APH	14 μg/m^3	10 μg/m^3

Table 1 Proposed Analyte List for Sub-Slab Vapor and Ambient Air Samples UniFirst Corporation Woburn, Massachusetts			
Analyte	**Analytical Method[1]**	**Laboratory Target Reporting Limit**	**USEPA-Proposed Screening Level[2]**
C9-C10 Aromatic Hydrocarbons	MA APH	10 $\mu g/m^3$	10 $\mu g/m^3$

Notes:

[1] Samples will be analyzed using Modified EPA Method TO-15 with Selective Ion Monitoring (SIM) and Massachusetts Air-Phase Petroleum Hydrocarbons (MA APH) Method to achieve applicable reporting limits where possible.

[2] USEPA-Proposed Screening Levels provided in Attachment 1 of the February Comment Letter or by email from Joseph LeMay on March 8, 2010, except MTBE and 1,3-butadiene, which are based on the Oak Ridge National Laboratory Regional Screening Levels (RSLs).

USEPA = United States Environmental Protection Agency Region 1

K:\1-2114-2\EPA Response 2009\Soil Vapor Response\Oct 9 Final IAQA and VI Work Plan\Revised UniFirst VI Work Plan Mar 2010\Table 1 - Analyte List.doc

ANALYTICAL REPORT

Lab Number:	L1004705
Client:	The Johnson Company, Inc 100 State Street Suite 600 Montpelier, VT 05602
ATTN:	Bettina Longino
Project Name:	UNIFIRST PROPERTY IA / VI
Project Number:	1-2114-2
Report Date:	04/10/10

Certifications & Approvals: MA (M-MA030), NY (11627), CT (PH-0141), NH (2206), NJ (MA015), RI (LAO00299), ME (MA0030), PA (Registration #68-02089), LA NELAC (03090), FL NELAC (E87814), US Army Corps of Engineers.

320 Forbes Boulevard, Mansfield, MA 02048-1806
508-822-9300 (Fax) 508-822-3288 800-624-9220 - www.alphalab.com

Project Name: UNIFIRST PROPERTY IA / VI
Project Number: 1-2114-2

Lab Number: L1004705
Report Date: 04/10/10

Alpha Sample ID	Client ID	Sample Location	Collection Date/Time
L1004705-01	CAN 652 FC 466	WOBURN, MA	04/01/10 00:00
L1004705-02	CAN 998 FC 045	WOBURN, MA	04/01/10 00:00
L1004705-03	CAN 1706 FC 291	WOBURN, MA	04/01/10 00:00
L1004705-04	CAN 1692 FC 368	WOBURN, MA	04/01/10 00:00
L1004705-05	CAN 965 FC 367	WOBURN, MA	04/01/10 00:00
L1004705-06	CAN 587 FC 465	WOBURN, MA	04/01/10 00:00
L1004705-07	CAN 956 FC 019	WOBURN, MA	04/01/10 00:00
L1004705-08	CAN 1520 FC 463	WOBURN, MA	04/01/10 00:00
L1004705-09	CAN 764 FC 257	WOBURN, MA	04/01/10 00:00
L1004705-10	CAN 1053 FC 269	WOBURN, MA	04/01/10 00:00
L1004705-11	CAN 1633 FC 208	WOBURN, MA	04/01/10 00:00
L1004705-12	CAN 1655 FC 275	WOBURN, MA	04/01/10 00:00
L1004705-13	CAN 969 FC 158	WOBURN, MA	04/01/10 00:00
L1004705-14	CAN 696 FC 303	WOBURN, MA	04/01/10 00:00
L1004705-15	CAN 1562 FC 166	WOBURN, MA	04/01/10 00:00
L1004705-16	CAN 1576 FC 343	WOBURN, MA	04/01/10 00:00
L1004705-17	CAN 932 FC 332	WOBURN, MA	04/01/10 00:00
L1004705-18	CAN 1646 FC 090	WOBURN, MA	04/01/10 00:00
L1004705-19	CAN 963 FC 451	WOBURN, MA	04/01/10 00:00
L1004705-20	CAN 1556 FC 390	WOBURN, MA	04/01/10 00:00

Project Name: UNIFIRST PROPERTY IA / VI **Lab Number:** L1004705

Project Number: 1-2114-2 **Report Date:** 04/10/10

MADEP MCP Response Action Analytical Report Certification

This form provides certifications for all samples performed by MCP methods. Please refer to the Sample Results and Container Information sections of this report for specification of MCP methods used for each analysis. The following questions pertain only to MCP Analytical Methods.

An affirmative response to questions A, B, C & D is required for "Presumptive Certainty" status		
A	Were all samples received by the laboratory in a condition consistent with those described on their Chain-of-Custody documentation for the data set?	YES
B	Were all QA/QC procedures required for the specified analytical methods(s) included in this report followed, including the requirement to note and discuss in a narrative QC data that did not meet appropriate performance standards or guidelines?	YES
C	Does the analytical data included in this report meet all the requirements for "Presumptive Certainty", as described in section 2.0 of the MADEP document CAM VII A, "Quality Assurance and Quality Control Guidelines for the Acquisition and Reporting of Analytical Data"?	YES
D	VPH and EPH methods only: Was the VPH or EPH method run without significant modifications, as specified in Section 11.3?	N/A

A response to questions E and F is required for "Presumptive Certainty" status		
E	Were all QC performance standards and recommendations for the specified method(s) achieved?	YES
F	Were results for all analyte-list compounds/elements for the specified method(s) reported?	YES

For any questions answered "No", please refer to the case narrative section on the following page(s).

Please note that sample matrix information is located in the Sample Results section of this report.

Project Name: UNIFIRST PROPERTY IA / VI **Lab Number:** L1004705
Project Number: 1-2114-2 **Report Date:** 04/10/10

Case Narrative

The samples were received in accordance with the Chain of Custody and no significant deviations were encountered during the preparation or analysis unless otherwise noted. Sample Receipt, Container Information, and the Chain of Custody are located at the back of the report.

Results contained within this report relate only to the samples submitted under this Alpha Lab Number and meet all of the requirements of NELAC, for all NELAC accredited parameters. The data presented in this report is organized by parameter (i.e. VOC, SVOC, etc.). Sample specific Quality Control data (i.e. Surrogate Spike Recovery) is reported at the end of the target analyte list for each individual sample, followed by the Laboratory Batch Quality Control at the end of each parameter. If a sample was re-analyzed or re-extracted due to a required quality control corrective action and if both sets of data are reported, the Laboratory ID of the re-analysis or re-extraction is designated with an "R" or "RE", respectively. When multiple Batch Quality Control elements are reported (e.g. more than one LCS), the associated samples for each element are noted in the grey shaded header line of each data table. Any Laboratory Batch, Sample Specific % recovery or RPD value that is outside the listed Acceptance Criteria is bolded in the report. Definitions of all data qualifiers and acronyms used in this report are provided in the Glossary located at the back of the report.

Please see the associated ADEx data file for a comparison of laboratory reporting limits that were achieved with the regulatory Numerical Standards requested on the Chain of Custody.

For additional information, please contact Client Services at 800-624-9220.

Individual Canister and Flow Controller Certification.

Volatile Organics in Air (SIM)

1,2-Dibromoethane and Naphthalene were evaluated to 1/2 the RL and are 'J' qualified if the concentration is below the quantitation limit (RDL), but greater than or equal to 1/2 the RDL. Values are estimated.

MCP Related Narratives

Petroleum Hydrocarbons in Air

All MCP required questions were answered with affirmative responses; therefore, there are no relevant data issues to discuss.

The internal standards were within method criteria.

I, the undersigned, attest under the pains and penalties of perjury that, to the best of my knowledge and belief and based upon my personal inquiry of those responsible for providing the information contained in this analytical report, such information is accurate and complete. This certificate of analysis is not complete unless this page accompanies any and all pages of this report.

Authorized Signature: Kathleen M. O'Brien

Title: Technical Director/Representative Date: 04/10/10

AIR

Project Name: UNIFIRST PROPERTY IA / VI

Project Number: 1-2114-2

Lab Number: L1004705

Report Date: 04/10/10

SAMPLE RESULTS

Lab ID: L1004705-01
Client ID: CAN 652 FC 466
Sample Location: WOBURN, MA
Matrix: Air
Anaytical Method: 48,TO-15-SIM
Analytical Date: 04/08/10 15:51
Analyst: RY

Date Collected: 04/01/10 00:00
Date Received: 04/02/10
Field Prep: Not Specified

Parameter	ppbV Results	ppbV RDL	ug/m3 Results	ug/m3 RDL	Qualifier	Dilution Factor
Volatile Organics in Air by SIM - Mansfield Lab						
1,1,1-Trichloroethane	ND	0.020	ND	0.109		1
1,1,2-Trichloroethane	ND	0.020	ND	0.109		1
1,1-Dichloroethane	ND	0.020	ND	0.081		1
1,1-Dichloroethene	ND	0.020	ND	0.079		1
1,2,4-Trimethylbenzene	ND	0.020	ND	0.098		1
1,2-Dibromoethane	ND	0.020	ND	0.154		1
1,2-Dichloroethane	ND	0.020	ND	0.081		1
1,2-Dichloropropane	ND	0.020	ND	0.092		1
1,3-Butadiene	ND	0.020	ND	0.044		1
1,3-Dichlorobenzene	ND	0.020	ND	0.120		1
1,4-Dichlorobenzene	ND	0.020	ND	0.120		1
Benzene	ND	0.070	ND	0.223		1
Bromodichloromethane	ND	0.020	ND	0.134		1
Bromoform	ND	0.020	ND	0.206		1
Carbon tetrachloride	ND	0.020	ND	0.126		1
Chlorobenzene	ND	0.020	ND	0.092		1
Chloroform	ND	0.020	ND	0.098		1
cis-1,2-Dichloroethene	ND	0.020	ND	0.079		1
Ethylbenzene	ND	0.020	ND	0.087		1
Methylene chloride	ND	0.500	ND	1.74		1
Methyl tert butyl ether	ND	0.020	ND	0.072		1
Naphthalene	ND	0.050	ND	0.262		1
Xylenes, Total	ND	0.060	ND	0.260		1
Tetrachloroethene	ND	0.020	ND	0.136		1
Toluene	ND	0.050	ND	0.188		1

Project Name: UNIFIRST PROPERTY IA / VI

Project Number: 1-2114-2

Lab Number: L1004705

Report Date: 04/10/10

SAMPLE RESULTS

Lab ID: L1004705-01
Client ID: CAN 652 FC 466
Sample Location: WOBURN, MA

Date Collected: 04/01/10 00:00
Date Received: 04/02/10
Field Prep: Not Specified

Parameter	ppbV Results	ppbV RDL	ug/m3 Results	ug/m3 RDL	Qualifier	Dilution Factor
Volatile Organics in Air by SIM - Mansfield Lab						
trans-1,2-Dichloroethene	ND	0.020	ND	0.079		1
trans-1,3-Dichloropropene	ND	0.020	ND	0.091		1
Trichloroethene	ND	0.020	ND	0.107		1
Vinyl chloride	ND	0.020	ND	0.051		1
Isopropylbenzene	ND	0.500	ND	2.46		1

Project Name: UNIFIRST PROPERTY IA / VI

Project Number: 1-2114-2

Lab Number: L1004705

Report Date: 04/10/10

SAMPLE RESULTS

Lab ID: L1004705-02
Client ID: CAN 998 FC 045
Sample Location: WOBURN, MA
Matrix: Air
Anaytical Method: 48,TO-15-SIM
Analytical Date: 04/08/10 16:27
Analyst: RY

Date Collected: 04/01/10 00:00
Date Received: 04/02/10
Field Prep: Not Specified

Parameter	ppbV Results	ppbV RDL	ug/m3 Results	ug/m3 RDL	Qualifier	Dilution Factor
Volatile Organics in Air by SIM - Mansfield Lab						
1,1,1-Trichloroethane	ND	0.020	ND	0.109		1
1,1,2-Trichloroethane	ND	0.020	ND	0.109		1
1,1-Dichloroethane	ND	0.020	ND	0.081		1
1,1-Dichloroethene	ND	0.020	ND	0.079		1
1,2,4-Trimethylbenzene	ND	0.020	ND	0.098		1
1,2-Dibromoethane	ND	0.020	ND	0.154		1
1,2-Dichloroethane	ND	0.020	ND	0.081		1
1,2-Dichloropropane	ND	0.020	ND	0.092		1
1,3-Butadiene	ND	0.020	ND	0.044		1
1,3-Dichlorobenzene	ND	0.020	ND	0.120		1
1,4-Dichlorobenzene	ND	0.020	ND	0.120		1
Benzene	ND	0.070	ND	0.223		1
Bromodichloromethane	ND	0.020	ND	0.134		1
Bromoform	ND	0.020	ND	0.206		1
Carbon tetrachloride	ND	0.020	ND	0.126		1
Chlorobenzene	ND	0.020	ND	0.092		1
Chloroform	ND	0.020	ND	0.098		1
cis-1,2-Dichloroethene	ND	0.020	ND	0.079		1
Ethylbenzene	ND	0.020	ND	0.087		1
Methylene chloride	ND	0.500	ND	1.74		1
Methyl tert butyl ether	ND	0.020	ND	0.072		1
Naphthalene	ND	0.050	ND	0.262		1
Xylenes, Total	ND	0.060	ND	0.260		1
Tetrachloroethene	ND	0.020	ND	0.136		1
Toluene	ND	0.050	ND	0.188		1

Project Name: UNIFIRST PROPERTY IA / VI

Project Number: 1-2114-2

Lab Number: L1004705

Report Date: 04/10/10

SAMPLE RESULTS

Lab ID: L1004705-02
Client ID: CAN 998 FC 045
Sample Location: WOBURN, MA

Date Collected: 04/01/10 00:00
Date Received: 04/02/10
Field Prep: Not Specified

Parameter	ppbV Results	ppbV RDL	ug/m3 Results	ug/m3 RDL	Qualifier	Dilution Factor
Volatile Organics in Air by SIM - Mansfield Lab						
trans-1,2-Dichloroethene	ND	0.020	ND	0.079		1
trans-1,3-Dichloropropene	ND	0.020	ND	0.091		1
Trichloroethene	ND	0.020	ND	0.107		1
Vinyl chloride	ND	0.020	ND	0.051		1
Isopropylbenzene	ND	0.500	ND	2.46		1

Project Name: UNIFIRST PROPERTY IA / VI
Project Number: 1-2114-2

Lab Number: L1004705
Report Date: 04/10/10

SAMPLE RESULTS

Lab ID: L1004705-03
Client ID: CAN 1706 FC 291
Sample Location: WOBURN, MA
Matrix: Air
Anaytical Method: 48,TO-15-SIM
Analytical Date: 04/08/10 18:28
Analyst: RY

Date Collected: 04/01/10 00:00
Date Received: 04/02/10
Field Prep: Not Specified

Parameter	ppbV Results	ppbV RDL	ug/m3 Results	ug/m3 RDL	Qualifier	Dilution Factor
Volatile Organics in Air by SIM - Mansfield Lab						
1,1,1-Trichloroethane	ND	0.020	ND	0.109		1
1,1,2-Trichloroethane	ND	0.020	ND	0.109		1
1,1-Dichloroethane	ND	0.020	ND	0.081		1
1,1-Dichloroethene	ND	0.020	ND	0.079		1
1,2,4-Trimethylbenzene	ND	0.020	ND	0.098		1
1,2-Dibromoethane	ND	0.020	ND	0.154		1
1,2-Dichloroethane	ND	0.020	ND	0.081		1
1,2-Dichloropropane	ND	0.020	ND	0.092		1
1,3-Butadiene	ND	0.020	ND	0.044		1
1,3-Dichlorobenzene	ND	0.020	ND	0.120		1
1,4-Dichlorobenzene	ND	0.020	ND	0.120		1
Benzene	ND	0.070	ND	0.223		1
Bromodichloromethane	ND	0.020	ND	0.134		1
Bromoform	ND	0.020	ND	0.206		1
Carbon tetrachloride	ND	0.020	ND	0.126		1
Chlorobenzene	ND	0.020	ND	0.092		1
Chloroform	ND	0.020	ND	0.098		1
cis-1,2-Dichloroethene	ND	0.020	ND	0.079		1
Ethylbenzene	ND	0.020	ND	0.087		1
Methylene chloride	ND	0.500	ND	1.74		1
Methyl tert butyl ether	ND	0.020	ND	0.072		1
Naphthalene	ND	0.050	ND	0.262		1
Xylenes, Total	ND	0.060	ND	0.260		1
Tetrachloroethene	ND	0.020	ND	0.136		1
Toluene	ND	0.050	ND	0.188		1

Project Name: UNIFIRST PROPERTY IA / VI

Project Number: 1-2114-2

Lab Number: L1004705

Report Date: 04/10/10

SAMPLE RESULTS

Lab ID: L1004705-03
Client ID: CAN 1706 FC 291
Sample Location: WOBURN, MA

Date Collected: 04/01/10 00:00
Date Received: 04/02/10
Field Prep: Not Specified

Parameter	ppbV Results	ppbV RDL	ug/m3 Results	ug/m3 RDL	Qualifier	Dilution Factor
Volatile Organics in Air by SIM - Mansfield Lab						
trans-1,2-Dichloroethene	ND	0.020	ND	0.079		1
trans-1,3-Dichloropropene	ND	0.020	ND	0.091		1
Trichloroethene	ND	0.020	ND	0.107		1
Vinyl chloride	ND	0.020	ND	0.051		1
Isopropylbenzene	ND	0.500	ND	2.46		1

Project Name: UNIFIRST PROPERTY IA / VI
Project Number: 1-2114-2

Lab Number: L1004705
Report Date: 04/10/10

SAMPLE RESULTS

Lab ID: L1004705-04
Client ID: CAN 1692 FC 368
Sample Location: WOBURN, MA
Matrix: Air
Anaytical Method: 48,TO-15-SIM
Analytical Date: 04/08/10 17:01
Analyst: RY

Date Collected: 04/01/10 00:00
Date Received: 04/02/10
Field Prep: Not Specified

Parameter	ppbV Results	ppbV RDL	ug/m3 Results	ug/m3 RDL	Qualifier	Dilution Factor
Volatile Organics in Air by SIM - Mansfield Lab						
1,1,1-Trichloroethane	ND	0.020	ND	0.109		1
1,1,2-Trichloroethane	ND	0.020	ND	0.109		1
1,1-Dichloroethane	ND	0.020	ND	0.081		1
1,1-Dichloroethene	ND	0.020	ND	0.079		1
1,2,4-Trimethylbenzene	ND	0.020	ND	0.098		1
1,2-Dibromoethane	ND	0.020	ND	0.154		1
1,2-Dichloroethane	ND	0.020	ND	0.081		1
1,2-Dichloropropane	ND	0.020	ND	0.092		1
1,3-Butadiene	ND	0.020	ND	0.044		1
1,3-Dichlorobenzene	ND	0.020	ND	0.120		1
1,4-Dichlorobenzene	ND	0.020	ND	0.120		1
Benzene	ND	0.070	ND	0.223		1
Bromodichloromethane	ND	0.020	ND	0.134		1
Bromoform	ND	0.020	ND	0.206		1
Carbon tetrachloride	ND	0.020	ND	0.126		1
Chlorobenzene	ND	0.020	ND	0.092		1
Chloroform	ND	0.020	ND	0.098		1
cis-1,2-Dichloroethene	ND	0.020	ND	0.079		1
Ethylbenzene	ND	0.020	ND	0.087		1
Methylene chloride	ND	0.500	ND	1.74		1
Methyl tert butyl ether	ND	0.020	ND	0.072		1
Naphthalene	ND	0.050	ND	0.262		1
Xylenes, Total	ND	0.060	ND	0.260		1
Tetrachloroethene	ND	0.020	ND	0.136		1
Toluene	ND	0.050	ND	0.188		1

Project Name: UNIFIRST PROPERTY IA / VI

Project Number: 1-2114-2

Lab Number: L1004705

Report Date: 04/10/10

SAMPLE RESULTS

Lab ID: L1004705-04
Client ID: CAN 1692 FC 368
Sample Location: WOBURN, MA

Date Collected: 04/01/10 00:00
Date Received: 04/02/10
Field Prep: Not Specified

Parameter	ppbV Results	ppbV RDL	ug/m3 Results	ug/m3 RDL	Qualifier	Dilution Factor
Volatile Organics in Air by SIM - Mansfield Lab						
trans-1,2-Dichloroethene	ND	0.020	ND	0.079		1
trans-1,3-Dichloropropene	ND	0.020	ND	0.091		1
Trichloroethene	ND	0.020	ND	0.107		1
Vinyl chloride	ND	0.020	ND	0.051		1
Isopropylbenzene	ND	0.500	ND	2.46		1

Project Name: UNIFIRST PROPERTY IA / VI
Project Number: 1-2114-2

Lab Number: L1004705
Report Date: 04/10/10

SAMPLE RESULTS

Lab ID: L1004705-05
Client ID: CAN 965 FC 367
Sample Location: WOBURN, MA
Matrix: Air
Anaytical Method: 48,TO-15-SIM
Analytical Date: 04/08/10 17:35
Analyst: RY

Date Collected: 04/01/10 00:00
Date Received: 04/02/10
Field Prep: Not Specified

Parameter	ppbV Results	ppbV RDL	ug/m3 Results	ug/m3 RDL	Qualifier	Dilution Factor
Volatile Organics in Air by SIM - Mansfield Lab						
1,1,1-Trichloroethane	ND	0.020	ND	0.109		1
1,1,2-Trichloroethane	ND	0.020	ND	0.109		1
1,1-Dichloroethane	ND	0.020	ND	0.081		1
1,1-Dichloroethene	ND	0.020	ND	0.079		1
1,2,4-Trimethylbenzene	ND	0.020	ND	0.098		1
1,2-Dibromoethane	ND	0.020	ND	0.154		1
1,2-Dichloroethane	ND	0.020	ND	0.081		1
1,2-Dichloropropane	ND	0.020	ND	0.092		1
1,3-Butadiene	ND	0.020	ND	0.044		1
1,3-Dichlorobenzene	ND	0.020	ND	0.120		1
1,4-Dichlorobenzene	ND	0.020	ND	0.120		1
Benzene	ND	0.070	ND	0.223		1
Bromodichloromethane	ND	0.020	ND	0.134		1
Bromoform	ND	0.020	ND	0.206		1
Carbon tetrachloride	ND	0.020	ND	0.126		1
Chlorobenzene	ND	0.020	ND	0.092		1
Chloroform	ND	0.020	ND	0.098		1
cis-1,2-Dichloroethene	ND	0.020	ND	0.079		1
Ethylbenzene	ND	0.020	ND	0.087		1
Methylene chloride	ND	0.500	ND	1.74		1
Methyl tert butyl ether	ND	0.020	ND	0.072		1
Naphthalene	ND	0.050	ND	0.262		1
Xylenes, Total	ND	0.060	ND	0.260		1
Tetrachloroethene	ND	0.020	ND	0.136		1
Toluene	ND	0.050	ND	0.188		1

Project Name: UNIFIRST PROPERTY IA / VI

Project Number: 1-2114-2

Lab Number: L1004705

Report Date: 04/10/10

SAMPLE RESULTS

Lab ID: L1004705-05
Client ID: CAN 965 FC 367
Sample Location: WOBURN, MA

Date Collected: 04/01/10 00:00
Date Received: 04/02/10
Field Prep: Not Specified

Parameter	ppbV Results	ppbV RDL	ug/m3 Results	ug/m3 RDL	Qualifier	Dilution Factor
Volatile Organics in Air by SIM - Mansfield Lab						
trans-1,2-Dichloroethene	ND	0.020	ND	0.079		1
trans-1,3-Dichloropropene	ND	0.020	ND	0.091		1
Trichloroethene	ND	0.020	ND	0.107		1
Vinyl chloride	ND	0.020	ND	0.051		1
Isopropylbenzene	ND	0.500	ND	2.46		1

Project Name: UNIFIRST PROPERTY IA / VI

Project Number: 1-2114-2

Lab Number: L1004705

Report Date: 04/10/10

SAMPLE RESULTS

Lab ID: L1004705-06
Client ID: CAN 587 FC 465
Sample Location: WOBURN, MA
Matrix: Air
Anaytical Method: 48,TO-15-SIM
Analytical Date: 04/08/10 19:03
Analyst: RY

Date Collected: 04/01/10 00:00
Date Received: 04/02/10
Field Prep: Not Specified

Parameter	ppbV Results	ppbV RDL	ug/m3 Results	ug/m3 RDL	Qualifier	Dilution Factor
Volatile Organics in Air by SIM - Mansfield Lab						
1,1,1-Trichloroethane	ND	0.020	ND	0.109		1
1,1,2-Trichloroethane	ND	0.020	ND	0.109		1
1,1-Dichloroethane	ND	0.020	ND	0.081		1
1,1-Dichloroethene	ND	0.020	ND	0.079		1
1,2,4-Trimethylbenzene	ND	0.020	ND	0.098		1
1,2-Dibromoethane	ND	0.020	ND	0.154		1
1,2-Dichloroethane	ND	0.020	ND	0.081		1
1,2-Dichloropropane	ND	0.020	ND	0.092		1
1,3-Butadiene	ND	0.020	ND	0.044		1
1,3-Dichlorobenzene	ND	0.020	ND	0.120		1
1,4-Dichlorobenzene	ND	0.020	ND	0.120		1
Benzene	ND	0.070	ND	0.223		1
Bromodichloromethane	ND	0.020	ND	0.134		1
Bromoform	ND	0.020	ND	0.206		1
Carbon tetrachloride	ND	0.020	ND	0.126		1
Chlorobenzene	ND	0.020	ND	0.092		1
Chloroform	ND	0.020	ND	0.098		1
cis-1,2-Dichloroethene	ND	0.020	ND	0.079		1
Ethylbenzene	ND	0.020	ND	0.087		1
Methylene chloride	ND	0.500	ND	1.74		1
Methyl tert butyl ether	ND	0.020	ND	0.072		1
Naphthalene	ND	0.050	ND	0.262		1
Xylenes, Total	ND	0.060	ND	0.260		1
Tetrachloroethene	ND	0.020	ND	0.136		1
Toluene	ND	0.050	ND	0.188		1

Project Name: UNIFIRST PROPERTY IA / VI

Project Number: 1-2114-2

Lab Number: L1004705

Report Date: 04/10/10

SAMPLE RESULTS

Lab ID: L1004705-06
Client ID: CAN 587 FC 465
Sample Location: WOBURN, MA

Date Collected: 04/01/10 00:00
Date Received: 04/02/10
Field Prep: Not Specified

Parameter	ppbV Results	ppbV RDL	ug/m3 Results	ug/m3 RDL	Qualifier	Dilution Factor
Volatile Organics in Air by SIM - Mansfield Lab						
trans-1,2-Dichloroethene	ND	0.020	ND	0.079		1
trans-1,3-Dichloropropene	ND	0.020	ND	0.091		1
Trichloroethene	ND	0.020	ND	0.107		1
Vinyl chloride	ND	0.020	ND	0.051		1
Isopropylbenzene	ND	0.500	ND	2.46		1

Project Name: UNIFIRST PROPERTY IA / VI
Project Number: 1-2114-2

Lab Number: L1004705
Report Date: 04/10/10

SAMPLE RESULTS

Lab ID: L1004705-07
Client ID: CAN 956 FC 019
Sample Location: WOBURN, MA
Matrix: Air
Anaytical Method: 48,TO-15-SIM
Analytical Date: 04/08/10 19:38
Analyst: RY

Date Collected: 04/01/10 00:00
Date Received: 04/02/10
Field Prep: Not Specified

Parameter	ppbV Results	ppbV RDL	ug/m3 Results	ug/m3 RDL	Qualifier	Dilution Factor
Volatile Organics in Air by SIM - Mansfield Lab						
1,1,1-Trichloroethane	ND	0.020	ND	0.109		1
1,1,2-Trichloroethane	ND	0.020	ND	0.109		1
1,1-Dichloroethane	ND	0.020	ND	0.081		1
1,1-Dichloroethene	ND	0.020	ND	0.079		1
1,2,4-Trimethylbenzene	ND	0.020	ND	0.098		1
1,2-Dibromoethane	ND	0.020	ND	0.154		1
1,2-Dichloroethane	ND	0.020	ND	0.081		1
1,2-Dichloropropane	ND	0.020	ND	0.092		1
1,3-Butadiene	ND	0.020	ND	0.044		1
1,3-Dichlorobenzene	ND	0.020	ND	0.120		1
1,4-Dichlorobenzene	ND	0.020	ND	0.120		1
Benzene	ND	0.070	ND	0.223		1
Bromodichloromethane	ND	0.020	ND	0.134		1
Bromoform	ND	0.020	ND	0.206		1
Carbon tetrachloride	ND	0.020	ND	0.126		1
Chlorobenzene	ND	0.020	ND	0.092		1
Chloroform	ND	0.020	ND	0.098		1
cis-1,2-Dichloroethene	ND	0.020	ND	0.079		1
Ethylbenzene	ND	0.020	ND	0.087		1
Methylene chloride	ND	0.500	ND	1.74		1
Methyl tert butyl ether	ND	0.020	ND	0.072		1
Naphthalene	ND	0.050	ND	0.262		1
Xylenes, Total	ND	0.060	ND	0.260		1
Tetrachloroethene	ND	0.020	ND	0.136		1
Toluene	ND	0.050	ND	0.188		1

Project Name: UNIFIRST PROPERTY IA / VI

Project Number: 1-2114-2

Lab Number: L1004705

Report Date: 04/10/10

SAMPLE RESULTS

Lab ID: L1004705-07
Client ID: CAN 956 FC 019
Sample Location: WOBURN, MA

Date Collected: 04/01/10 00:00
Date Received: 04/02/10
Field Prep: Not Specified

Parameter	ppbV Results	ppbV RDL	ug/m3 Results	ug/m3 RDL	Qualifier	Dilution Factor
Volatile Organics in Air by SIM - Mansfield Lab						
trans-1,2-Dichloroethene	ND	0.020	ND	0.079		1
trans-1,3-Dichloropropene	ND	0.020	ND	0.091		1
Trichloroethene	ND	0.020	ND	0.107		1
Vinyl chloride	ND	0.020	ND	0.051		1
Isopropylbenzene	ND	0.500	ND	2.46		1

Project Name: UNIFIRST PROPERTY IA / VI
Project Number: 1-2114-2

Lab Number: L1004705
Report Date: 04/10/10

SAMPLE RESULTS

Lab ID: L1004705-08
Client ID: CAN 1520 FC 463
Sample Location: WOBURN, MA
Matrix: Air
Anaytical Method: 48,TO-15-SIM
Analytical Date: 04/08/10 20:13
Analyst: RY

Date Collected: 04/01/10 00:00
Date Received: 04/02/10
Field Prep: Not Specified

Parameter	ppbV Results	ppbV RDL	ug/m3 Results	ug/m3 RDL	Qualifier	Dilution Factor
Volatile Organics in Air by SIM - Mansfield Lab						
1,1,1-Trichloroethane	ND	0.020	ND	0.109		1
1,1,2-Trichloroethane	ND	0.020	ND	0.109		1
1,1-Dichloroethane	ND	0.020	ND	0.081		1
1,1-Dichloroethene	ND	0.020	ND	0.079		1
1,2,4-Trimethylbenzene	ND	0.020	ND	0.098		1
1,2-Dibromoethane	ND	0.020	ND	0.154		1
1,2-Dichloroethane	ND	0.020	ND	0.081		1
1,2-Dichloropropane	ND	0.020	ND	0.092		1
1,3-Butadiene	ND	0.020	ND	0.044		1
1,3-Dichlorobenzene	ND	0.020	ND	0.120		1
1,4-Dichlorobenzene	ND	0.020	ND	0.120		1
Benzene	ND	0.070	ND	0.223		1
Bromodichloromethane	ND	0.020	ND	0.134		1
Bromoform	ND	0.020	ND	0.206		1
Carbon tetrachloride	ND	0.020	ND	0.126		1
Chlorobenzene	ND	0.020	ND	0.092		1
Chloroform	ND	0.020	ND	0.098		1
cis-1,2-Dichloroethene	ND	0.020	ND	0.079		1
Ethylbenzene	ND	0.020	ND	0.087		1
Methylene chloride	ND	0.500	ND	1.74		1
Methyl tert butyl ether	ND	0.020	ND	0.072		1
Naphthalene	ND	0.050	ND	0.262		1
Xylenes, Total	ND	0.060	ND	0.260		1
Tetrachloroethene	ND	0.020	ND	0.136		1
Toluene	ND	0.050	ND	0.188		1

Project Name: UNIFIRST PROPERTY IA / VI

Project Number: 1-2114-2

Lab Number: L1004705

Report Date: 04/10/10

SAMPLE RESULTS

Lab ID: L1004705-08
Client ID: CAN 1520 FC 463
Sample Location: WOBURN, MA

Date Collected: 04/01/10 00:00
Date Received: 04/02/10
Field Prep: Not Specified

Parameter	ppbV Results	ppbV RDL	ug/m3 Results	ug/m3 RDL	Qualifier	Dilution Factor
Volatile Organics in Air by SIM - Mansfield Lab						
trans-1,2-Dichloroethene	ND	0.020	ND	0.079		1
trans-1,3-Dichloropropene	ND	0.020	ND	0.091		1
Trichloroethene	ND	0.020	ND	0.107		1
Vinyl chloride	ND	0.020	ND	0.051		1
Isopropylbenzene	ND	0.500	ND	2.46		1

Project Name: UNIFIRST PROPERTY IA / VI
Project Number: 1-2114-2

Lab Number: L1004705
Report Date: 04/10/10

SAMPLE RESULTS

Lab ID:	L1004705-09	Date Collected:	04/01/10 00:00
Client ID:	CAN 764 FC 257	Date Received:	04/02/10
Sample Location:	WOBURN, MA	Field Prep:	Not Specified
Matrix:	Air		
Anaytical Method:	48,TO-15-SIM		
Analytical Date:	04/08/10 20:48		
Analyst:	RY		

Parameter	ppbV Results	ppbV RDL	ug/m3 Results	ug/m3 RDL	Qualifier	Dilution Factor
Volatile Organics in Air by SIM - Mansfield Lab						
1,1,1-Trichloroethane	ND	0.020	ND	0.109		1
1,1,2-Trichloroethane	ND	0.020	ND	0.109		1
1,1-Dichloroethane	ND	0.020	ND	0.081		1
1,1-Dichloroethene	ND	0.020	ND	0.079		1
1,2,4-Trimethylbenzene	ND	0.020	ND	0.098		1
1,2-Dibromoethane	ND	0.020	ND	0.154		1
1,2-Dichloroethane	ND	0.020	ND	0.081		1
1,2-Dichloropropane	ND	0.020	ND	0.092		1
1,3-Butadiene	ND	0.020	ND	0.044		1
1,3-Dichlorobenzene	ND	0.020	ND	0.120		1
1,4-Dichlorobenzene	ND	0.020	ND	0.120		1
Benzene	ND	0.070	ND	0.223		1
Bromodichloromethane	ND	0.020	ND	0.134		1
Bromoform	ND	0.020	ND	0.206		1
Carbon tetrachloride	ND	0.020	ND	0.126		1
Chlorobenzene	ND	0.020	ND	0.092		1
Chloroform	ND	0.020	ND	0.098		1
cis-1,2-Dichloroethene	ND	0.020	ND	0.079		1
Ethylbenzene	ND	0.020	ND	0.087		1
Methylene chloride	ND	0.500	ND	1.74		1
Methyl tert butyl ether	ND	0.020	ND	0.072		1
Naphthalene	ND	0.050	ND	0.262		1
Xylenes, Total	ND	0.060	ND	0.260		1
Tetrachloroethene	ND	0.020	ND	0.136		1
Toluene	ND	0.050	ND	0.188		1

Project Name: UNIFIRST PROPERTY IA / VI

Project Number: 1-2114-2

Lab Number: L1004705

Report Date: 04/10/10

SAMPLE RESULTS

Lab ID: L1004705-09
Client ID: CAN 764 FC 257
Sample Location: WOBURN, MA

Date Collected: 04/01/10 00:00
Date Received: 04/02/10
Field Prep: Not Specified

Parameter	ppbV Results	ppbV RDL	ug/m3 Results	ug/m3 RDL	Qualifier	Dilution Factor
Volatile Organics in Air by SIM - Mansfield Lab						
trans-1,2-Dichloroethene	ND	0.020	ND	0.079		1
trans-1,3-Dichloropropene	ND	0.020	ND	0.091		1
Trichloroethene	ND	0.020	ND	0.107		1
Vinyl chloride	ND	0.020	ND	0.051		1
Isopropylbenzene	ND	0.500	ND	2.46		1

Project Name: UNIFIRST PROPERTY IA / VI
Project Number: 1-2114-2

Lab Number: L1004705
Report Date: 04/10/10

SAMPLE RESULTS

Lab ID: L1004705-10
Client ID: CAN 1053 FC 269
Sample Location: WOBURN, MA
Matrix: Air
Anaytical Method: 48,TO-15-SIM
Analytical Date: 04/08/10 21:24
Analyst: RY

Date Collected: 04/01/10 00:00
Date Received: 04/02/10
Field Prep: Not Specified

Parameter	ppbV Results	ppbV RDL	ug/m3 Results	ug/m3 RDL	Qualifier	Dilution Factor
Volatile Organics in Air by SIM - Mansfield Lab						
1,1,1-Trichloroethane	ND	0.020	ND	0.109		1
1,1,2-Trichloroethane	ND	0.020	ND	0.109		1
1,1-Dichloroethane	ND	0.020	ND	0.081		1
1,1-Dichloroethene	ND	0.020	ND	0.079		1
1,2,4-Trimethylbenzene	ND	0.020	ND	0.098		1
1,2-Dibromoethane	ND	0.020	ND	0.154		1
1,2-Dichloroethane	ND	0.020	ND	0.081		1
1,2-Dichloropropane	ND	0.020	ND	0.092		1
1,3-Butadiene	ND	0.020	ND	0.044		1
1,3-Dichlorobenzene	ND	0.020	ND	0.120		1
1,4-Dichlorobenzene	ND	0.020	ND	0.120		1
Benzene	ND	0.070	ND	0.223		1
Bromodichloromethane	ND	0.020	ND	0.134		1
Bromoform	ND	0.020	ND	0.206		1
Carbon tetrachloride	ND	0.020	ND	0.126		1
Chlorobenzene	ND	0.020	ND	0.092		1
Chloroform	ND	0.020	ND	0.098		1
cis-1,2-Dichloroethene	ND	0.020	ND	0.079		1
Ethylbenzene	ND	0.020	ND	0.087		1
Methylene chloride	ND	0.500	ND	1.74		1
Methyl tert butyl ether	ND	0.020	ND	0.072		1
Naphthalene	ND	0.050	ND	0.262		1
Xylenes, Total	ND	0.060	ND	0.260		1
Tetrachloroethene	ND	0.020	ND	0.136		1
Toluene	ND	0.050	ND	0.188		1

Project Name: UNIFIRST PROPERTY IA / VI

Project Number: 1-2114-2

Lab Number: L1004705

Report Date: 04/10/10

SAMPLE RESULTS

Lab ID: L1004705-10
Client ID: CAN 1053 FC 269
Sample Location: WOBURN, MA

Date Collected: 04/01/10 00:00
Date Received: 04/02/10
Field Prep: Not Specified

Parameter	ppbV Results	ppbV RDL	ug/m3 Results	ug/m3 RDL	Qualifier	Dilution Factor
Volatile Organics in Air by SIM - Mansfield Lab						
trans-1,2-Dichloroethene	ND	0.020	ND	0.079		1
trans-1,3-Dichloropropene	ND	0.020	ND	0.091		1
Trichloroethene	ND	0.020	ND	0.107		1
Vinyl chloride	ND	0.020	ND	0.051		1
Isopropylbenzene	ND	0.500	ND	2.46		1

Project Name: UNIFIRST PROPERTY IA / VI
Project Number: 1-2114-2

Lab Number: L1004705
Report Date: 04/10/10

SAMPLE RESULTS

Lab ID: L1004705-11
Client ID: CAN 1633 FC 208
Sample Location: WOBURN, MA
Matrix: Air
Anaytical Method: 48,TO-15-SIM
Analytical Date: 04/08/10 21:58
Analyst: RY

Date Collected: 04/01/10 00:00
Date Received: 04/02/10
Field Prep: Not Specified

Parameter	ppbV Results	ppbV RDL	ug/m3 Results	ug/m3 RDL	Qualifier	Dilution Factor
Volatile Organics in Air by SIM - Mansfield Lab						
1,1,1-Trichloroethane	ND	0.020	ND	0.109		1
1,1,2-Trichloroethane	ND	0.020	ND	0.109		1
1,1-Dichloroethane	ND	0.020	ND	0.081		1
1,1-Dichloroethene	ND	0.020	ND	0.079		1
1,2,4-Trimethylbenzene	ND	0.020	ND	0.098		1
1,2-Dibromoethane	ND	0.020	ND	0.154		1
1,2-Dichloroethane	ND	0.020	ND	0.081		1
1,2-Dichloropropane	ND	0.020	ND	0.092		1
1,3-Butadiene	ND	0.020	ND	0.044		1
1,3-Dichlorobenzene	ND	0.020	ND	0.120		1
1,4-Dichlorobenzene	ND	0.020	ND	0.120		1
Benzene	ND	0.070	ND	0.223		1
Bromodichloromethane	ND	0.020	ND	0.134		1
Bromoform	ND	0.020	ND	0.206		1
Carbon tetrachloride	ND	0.020	ND	0.126		1
Chlorobenzene	ND	0.020	ND	0.092		1
Chloroform	ND	0.020	ND	0.098		1
cis-1,2-Dichloroethene	ND	0.020	ND	0.079		1
Ethylbenzene	ND	0.020	ND	0.087		1
Methylene chloride	ND	0.500	ND	1.74		1
Methyl tert butyl ether	ND	0.020	ND	0.072		1
Naphthalene	ND	0.050	ND	0.262		1
Xylenes, Total	ND	0.060	ND	0.260		1
Tetrachloroethene	ND	0.020	ND	0.136		1
Toluene	ND	0.050	ND	0.188		1

Project Name: UNIFIRST PROPERTY IA / VI

Project Number: 1-2114-2

Lab Number: L1004705

Report Date: 04/10/10

SAMPLE RESULTS

Lab ID: L1004705-11
Client ID: CAN 1633 FC 208
Sample Location: WOBURN, MA

Date Collected: 04/01/10 00:00
Date Received: 04/02/10
Field Prep: Not Specified

Parameter	ppbV Results	ppbV RDL	ug/m3 Results	ug/m3 RDL	Qualifier	Dilution Factor
Volatile Organics in Air by SIM - Mansfield Lab						
trans-1,2-Dichloroethene	ND	0.020	ND	0.079		1
trans-1,3-Dichloropropene	ND	0.020	ND	0.091		1
Trichloroethene	ND	0.020	ND	0.107		1
Vinyl chloride	ND	0.020	ND	0.051		1
Isopropylbenzene	ND	0.500	ND	2.46		1

Project Name: UNIFIRST PROPERTY IA / VI
Project Number: 1-2114-2

Lab Number: L1004705
Report Date: 04/10/10

SAMPLE RESULTS

Lab ID:	L1004705-12	Date Collected:	04/01/10 00:00
Client ID:	CAN 1655 FC 275	Date Received:	04/02/10
Sample Location:	WOBURN, MA	Field Prep:	Not Specified
Matrix:	Air		
Anaytical Method:	48,TO-15-SIM		
Analytical Date:	04/08/10 22:33		
Analyst:	RY		

Parameter	ppbV Results	ppbV RDL	ug/m3 Results	ug/m3 RDL	Qualifier	Dilution Factor
Volatile Organics in Air by SIM - Mansfield Lab						
1,1,1-Trichloroethane	ND	0.020	ND	0.109		1
1,1,2-Trichloroethane	ND	0.020	ND	0.109		1
1,1-Dichloroethane	ND	0.020	ND	0.081		1
1,1-Dichloroethene	ND	0.020	ND	0.079		1
1,2,4-Trimethylbenzene	ND	0.020	ND	0.098		1
1,2-Dibromoethane	ND	0.020	ND	0.154		1
1,2-Dichloroethane	ND	0.020	ND	0.081		1
1,2-Dichloropropane	ND	0.020	ND	0.092		1
1,3-Butadiene	ND	0.020	ND	0.044		1
1,3-Dichlorobenzene	ND	0.020	ND	0.120		1
1,4-Dichlorobenzene	ND	0.020	ND	0.120		1
Benzene	ND	0.070	ND	0.223		1
Bromodichloromethane	ND	0.020	ND	0.134		1
Bromoform	ND	0.020	ND	0.206		1
Carbon tetrachloride	ND	0.020	ND	0.126		1
Chlorobenzene	ND	0.020	ND	0.092		1
Chloroform	ND	0.020	ND	0.098		1
cis-1,2-Dichloroethene	ND	0.020	ND	0.079		1
Ethylbenzene	ND	0.020	ND	0.087		1
Methylene chloride	ND	0.500	ND	1.74		1
Methyl tert butyl ether	ND	0.020	ND	0.072		1
Naphthalene	ND	0.050	ND	0.262		1
Xylenes, Total	ND	0.060	ND	0.260		1
Tetrachloroethene	ND	0.020	ND	0.136		1
Toluene	ND	0.050	ND	0.188		1

Project Name: UNIFIRST PROPERTY IA / VI

Project Number: 1-2114-2

Lab Number: L1004705

Report Date: 04/10/10

SAMPLE RESULTS

Lab ID: L1004705-12
Client ID: CAN 1655 FC 275
Sample Location: WOBURN, MA

Date Collected: 04/01/10 00:00
Date Received: 04/02/10
Field Prep: Not Specified

Parameter	ppbV Results	ppbV RDL	ug/m3 Results	ug/m3 RDL	Qualifier	Dilution Factor
Volatile Organics in Air by SIM - Mansfield Lab						
trans-1,2-Dichloroethene	ND	0.020	ND	0.079		1
trans-1,3-Dichloropropene	ND	0.020	ND	0.091		1
Trichloroethene	ND	0.020	ND	0.107		1
Vinyl chloride	ND	0.020	ND	0.051		1
Isopropylbenzene	ND	0.500	ND	2.46		1

Project Name: UNIFIRST PROPERTY IA / VI

Project Number: 1-2114-2

Lab Number: L1004705

Report Date: 04/10/10

SAMPLE RESULTS

Lab ID: L1004705-13
Client ID: CAN 969 FC 158
Sample Location: WOBURN, MA
Matrix: Air
Anaytical Method: 48,TO-15-SIM
Analytical Date: 04/08/10 23:10
Analyst: RY

Date Collected: 04/01/10 00:00
Date Received: 04/02/10
Field Prep: Not Specified

Parameter	ppbV Results	ppbV RDL	ug/m3 Results	ug/m3 RDL	Qualifier	Dilution Factor
Volatile Organics in Air by SIM - Mansfield Lab						
1,1,1-Trichloroethane	ND	0.020	ND	0.109		1
1,1,2-Trichloroethane	ND	0.020	ND	0.109		1
1,1-Dichloroethane	ND	0.020	ND	0.081		1
1,1-Dichloroethene	ND	0.020	ND	0.079		1
1,2,4-Trimethylbenzene	ND	0.020	ND	0.098		1
1,2-Dibromoethane	ND	0.020	ND	0.154		1
1,2-Dichloroethane	ND	0.020	ND	0.081		1
1,2-Dichloropropane	ND	0.020	ND	0.092		1
1,3-Butadiene	ND	0.020	ND	0.044		1
1,3-Dichlorobenzene	ND	0.020	ND	0.120		1
1,4-Dichlorobenzene	ND	0.020	ND	0.120		1
Benzene	ND	0.070	ND	0.223		1
Bromodichloromethane	ND	0.020	ND	0.134		1
Bromoform	ND	0.020	ND	0.206		1
Carbon tetrachloride	ND	0.020	ND	0.126		1
Chlorobenzene	ND	0.020	ND	0.092		1
Chloroform	ND	0.020	ND	0.098		1
cis-1,2-Dichloroethene	ND	0.020	ND	0.079		1
Ethylbenzene	ND	0.020	ND	0.087		1
Methylene chloride	ND	0.500	ND	1.74		1
Methyl tert butyl ether	ND	0.020	ND	0.072		1
Naphthalene	ND	0.050	ND	0.262		1
Xylenes, Total	ND	0.060	ND	0.260		1
Tetrachloroethene	ND	0.020	ND	0.136		1
Toluene	ND	0.050	ND	0.188		1

Project Name: UNIFIRST PROPERTY IA / VI

Project Number: 1-2114-2

Lab Number: L1004705

Report Date: 04/10/10

SAMPLE RESULTS

Lab ID: L1004705-13
Client ID: CAN 969 FC 158
Sample Location: WOBURN, MA

Date Collected: 04/01/10 00:00
Date Received: 04/02/10
Field Prep: Not Specified

Parameter	ppbV Results	ppbV RDL	ug/m3 Results	ug/m3 RDL	Qualifier	Dilution Factor
Volatile Organics in Air by SIM - Mansfield Lab						
trans-1,2-Dichloroethene	ND	0.020	ND	0.079		1
trans-1,3-Dichloropropene	ND	0.020	ND	0.091		1
Trichloroethene	ND	0.020	ND	0.107		1
Vinyl chloride	ND	0.020	ND	0.051		1
Isopropylbenzene	ND	0.500	ND	2.46		1

Project Name: UNIFIRST PROPERTY IA / VI
Project Number: 1-2114-2

Lab Number: L1004705
Report Date: 04/10/10

SAMPLE RESULTS

Lab ID: L1004705-14
Client ID: CAN 696 FC 303
Sample Location: WOBURN, MA
Matrix: Air
Anaytical Method: 48,TO-15-SIM
Analytical Date: 04/08/10 23:44
Analyst: RY

Date Collected: 04/01/10 00:00
Date Received: 04/02/10
Field Prep: Not Specified

Parameter	ppbV Results	ppbV RDL	ug/m3 Results	ug/m3 RDL	Qualifier	Dilution Factor
Volatile Organics in Air by SIM - Mansfield Lab						
1,1,1-Trichloroethane	ND	0.020	ND	0.109		1
1,1,2-Trichloroethane	ND	0.020	ND	0.109		1
1,1-Dichloroethane	ND	0.020	ND	0.081		1
1,1-Dichloroethene	ND	0.020	ND	0.079		1
1,2,4-Trimethylbenzene	ND	0.020	ND	0.098		1
1,2-Dibromoethane	ND	0.020	ND	0.154		1
1,2-Dichloroethane	ND	0.020	ND	0.081		1
1,2-Dichloropropane	ND	0.020	ND	0.092		1
1,3-Butadiene	ND	0.020	ND	0.044		1
1,3-Dichlorobenzene	ND	0.020	ND	0.120		1
1,4-Dichlorobenzene	ND	0.020	ND	0.120		1
Benzene	ND	0.070	ND	0.223		1
Bromodichloromethane	ND	0.020	ND	0.134		1
Bromoform	ND	0.020	ND	0.206		1
Carbon tetrachloride	ND	0.020	ND	0.126		1
Chlorobenzene	ND	0.020	ND	0.092		1
Chloroform	ND	0.020	ND	0.098		1
cis-1,2-Dichloroethene	ND	0.020	ND	0.079		1
Ethylbenzene	ND	0.020	ND	0.087		1
Methylene chloride	ND	0.500	ND	1.74		1
Methyl tert butyl ether	ND	0.020	ND	0.072		1
Naphthalene	ND	0.050	ND	0.262		1
Xylenes, Total	ND	0.060	ND	0.260		1
Tetrachloroethene	ND	0.020	ND	0.136		1
Toluene	ND	0.050	ND	0.188		1

Project Name: UNIFIRST PROPERTY IA / VI

Project Number: 1-2114-2

Lab Number: L1004705

Report Date: 04/10/10

SAMPLE RESULTS

Lab ID: L1004705-14
Client ID: CAN 696 FC 303
Sample Location: WOBURN, MA

Date Collected: 04/01/10 00:00
Date Received: 04/02/10
Field Prep: Not Specified

Parameter	ppbV Results	ppbV RDL	ug/m3 Results	ug/m3 RDL	Qualifier	Dilution Factor
Volatile Organics in Air by SIM - Mansfield Lab						
trans-1,2-Dichloroethene	ND	0.020	ND	0.079		1
trans-1,3-Dichloropropene	ND	0.020	ND	0.091		1
Trichloroethene	ND	0.020	ND	0.107		1
Vinyl chloride	ND	0.020	ND	0.051		1
Isopropylbenzene	ND	0.500	ND	2.46		1

Project Name: UNIFIRST PROPERTY IA / VI
Project Number: 1-2114-2

Lab Number: L1004705
Report Date: 04/10/10

SAMPLE RESULTS

Lab ID: L1004705-15
Client ID: CAN 1562 FC 166
Sample Location: WOBURN, MA
Matrix: Air
Anaytical Method: 48,TO-15-SIM
Analytical Date: 04/09/10 00:19
Analyst: RY

Date Collected: 04/01/10 00:00
Date Received: 04/02/10
Field Prep: Not Specified

Parameter	ppbV Results	ppbV RDL	ug/m3 Results	ug/m3 RDL	Qualifier	Dilution Factor
Volatile Organics in Air by SIM - Mansfield Lab						
1,1,1-Trichloroethane	ND	0.020	ND	0.109		1
1,1,2-Trichloroethane	ND	0.020	ND	0.109		1
1,1-Dichloroethane	ND	0.020	ND	0.081		1
1,1-Dichloroethene	ND	0.020	ND	0.079		1
1,2,4-Trimethylbenzene	ND	0.020	ND	0.098		1
1,2-Dibromoethane	ND	0.020	ND	0.154		1
1,2-Dichloroethane	ND	0.020	ND	0.081		1
1,2-Dichloropropane	ND	0.020	ND	0.092		1
1,3-Butadiene	ND	0.020	ND	0.044		1
1,3-Dichlorobenzene	ND	0.020	ND	0.120		1
1,4-Dichlorobenzene	ND	0.020	ND	0.120		1
Benzene	ND	0.070	ND	0.223		1
Bromodichloromethane	ND	0.020	ND	0.134		1
Bromoform	ND	0.020	ND	0.206		1
Carbon tetrachloride	ND	0.020	ND	0.126		1
Chlorobenzene	ND	0.020	ND	0.092		1
Chloroform	ND	0.020	ND	0.098		1
cis-1,2-Dichloroethene	ND	0.020	ND	0.079		1
Ethylbenzene	ND	0.020	ND	0.087		1
Methylene chloride	ND	0.500	ND	1.74		1
Methyl tert butyl ether	ND	0.020	ND	0.072		1
Naphthalene	ND	0.050	ND	0.262		1
Xylenes, Total	ND	0.060	ND	0.260		1
Tetrachloroethene	ND	0.020	ND	0.136		1
Toluene	ND	0.050	ND	0.188		1

Project Name: UNIFIRST PROPERTY IA / VI

Project Number: 1-2114-2

Lab Number: L1004705

Report Date: 04/10/10

SAMPLE RESULTS

Lab ID: L1004705-15
Client ID: CAN 1562 FC 166
Sample Location: WOBURN, MA

Date Collected: 04/01/10 00:00
Date Received: 04/02/10
Field Prep: Not Specified

Parameter	ppbV Results	ppbV RDL	ug/m3 Results	ug/m3 RDL	Qualifier	Dilution Factor
Volatile Organics in Air by SIM - Mansfield Lab						
trans-1,2-Dichloroethene	ND	0.020	ND	0.079		1
trans-1,3-Dichloropropene	ND	0.020	ND	0.091		1
Trichloroethene	ND	0.020	ND	0.107		1
Vinyl chloride	ND	0.020	ND	0.051		1
Isopropylbenzene	ND	0.500	ND	2.46		1

Project Name: UNIFIRST PROPERTY IA / VI
Project Number: 1-2114-2

Lab Number: L1004705
Report Date: 04/10/10

SAMPLE RESULTS

Lab ID: L1004705-16
Client ID: CAN 1576 FC 343
Sample Location: WOBURN, MA
Matrix: Air
Anaytical Method: 48,TO-15-SIM
Analytical Date: 04/09/10 00:55
Analyst: RY

Date Collected: 04/01/10 00:00
Date Received: 04/02/10
Field Prep: Not Specified

Parameter	ppbV Results	ppbV RDL	ug/m3 Results	ug/m3 RDL	Qualifier	Dilution Factor
Volatile Organics in Air by SIM - Mansfield Lab						
1,1,1-Trichloroethane	ND	0.020	ND	0.109		1
1,1,2-Trichloroethane	ND	0.020	ND	0.109		1
1,1-Dichloroethane	ND	0.020	ND	0.081		1
1,1-Dichloroethene	ND	0.020	ND	0.079		1
1,2,4-Trimethylbenzene	ND	0.020	ND	0.098		1
1,2-Dibromoethane	ND	0.020	ND	0.154		1
1,2-Dichloroethane	ND	0.020	ND	0.081		1
1,2-Dichloropropane	ND	0.020	ND	0.092		1
1,3-Butadiene	ND	0.020	ND	0.044		1
1,3-Dichlorobenzene	ND	0.020	ND	0.120		1
1,4-Dichlorobenzene	ND	0.020	ND	0.120		1
Benzene	ND	0.070	ND	0.223		1
Bromodichloromethane	ND	0.020	ND	0.134		1
Bromoform	ND	0.020	ND	0.206		1
Carbon tetrachloride	ND	0.020	ND	0.126		1
Chlorobenzene	ND	0.020	ND	0.092		1
Chloroform	ND	0.020	ND	0.098		1
cis-1,2-Dichloroethene	ND	0.020	ND	0.079		1
Ethylbenzene	ND	0.020	ND	0.087		1
Methylene chloride	ND	0.500	ND	1.74		1
Methyl tert butyl ether	ND	0.020	ND	0.072		1
Naphthalene	ND	0.050	ND	0.262		1
Xylenes, Total	ND	0.060	ND	0.260		1
Tetrachloroethene	ND	0.020	ND	0.136		1
Toluene	ND	0.050	ND	0.188		1

Project Name: UNIFIRST PROPERTY IA / VI

Project Number: 1-2114-2

Lab Number: L1004705

Report Date: 04/10/10

SAMPLE RESULTS

Lab ID: L1004705-16
Client ID: CAN 1576 FC 343
Sample Location: WOBURN, MA

Date Collected: 04/01/10 00:00
Date Received: 04/02/10
Field Prep: Not Specified

Parameter	ppbV Results	ppbV RDL	ug/m3 Results	ug/m3 RDL	Qualifier	Dilution Factor
Volatile Organics in Air by SIM - Mansfield Lab						
trans-1,2-Dichloroethene	ND	0.020	ND	0.079		1
trans-1,3-Dichloropropene	ND	0.020	ND	0.091		1
Trichloroethene	ND	0.020	ND	0.107		1
Vinyl chloride	ND	0.020	ND	0.051		1
Isopropylbenzene	ND	0.500	ND	2.46		1

Project Name: UNIFIRST PROPERTY IA / VI

Project Number: 1-2114-2

Lab Number: L1004705

Report Date: 04/10/10

SAMPLE RESULTS

Lab ID:	L1004705-17	Date Collected:	04/01/10 00:00
Client ID:	CAN 932 FC 332	Date Received:	04/02/10
Sample Location:	WOBURN, MA	Field Prep:	Not Specified
Matrix:	Air		
Anaytical Method:	48,TO-15-SIM		
Analytical Date:	04/09/10 01:28		
Analyst:	RY		

	ppbV		ug/m3			
Parameter	Results	RDL	Results	RDL	Qualifier	Dilution Factor
Volatile Organics in Air by SIM - Mansfield Lab						
1,1,1-Trichloroethane	ND	0.020	ND	0.109		1
1,1,2-Trichloroethane	ND	0.020	ND	0.109		1
1,1-Dichloroethane	ND	0.020	ND	0.081		1
1,1-Dichloroethene	ND	0.020	ND	0.079		1
1,2,4-Trimethylbenzene	ND	0.020	ND	0.098		1
1,2-Dibromoethane	ND	0.020	ND	0.154		1
1,2-Dichloroethane	ND	0.020	ND	0.081		1
1,2-Dichloropropane	ND	0.020	ND	0.092		1
1,3-Butadiene	ND	0.020	ND	0.044		1
1,3-Dichlorobenzene	ND	0.020	ND	0.120		1
1,4-Dichlorobenzene	ND	0.020	ND	0.120		1
Benzene	ND	0.070	ND	0.223		1
Bromodichloromethane	ND	0.020	ND	0.134		1
Bromoform	ND	0.020	ND	0.206		1
Carbon tetrachloride	ND	0.020	ND	0.126		1
Chlorobenzene	ND	0.020	ND	0.092		1
Chloroform	ND	0.020	ND	0.098		1
cis-1,2-Dichloroethene	ND	0.020	ND	0.079		1
Ethylbenzene	ND	0.020	ND	0.087		1
Methylene chloride	ND	0.500	ND	1.74		1
Methyl tert butyl ether	ND	0.020	ND	0.072		1
Naphthalene	ND	0.050	ND	0.262		1
Xylenes, Total	ND	0.060	ND	0.260		1
Tetrachloroethene	ND	0.020	ND	0.136		1
Toluene	ND	0.050	ND	0.188		1

Project Name: UNIFIRST PROPERTY IA / VI

Project Number: 1-2114-2

Lab Number: L1004705

Report Date: 04/10/10

SAMPLE RESULTS

Lab ID: L1004705-17
Client ID: CAN 932 FC 332
Sample Location: WOBURN, MA

Date Collected: 04/01/10 00:00
Date Received: 04/02/10
Field Prep: Not Specified

Parameter	ppbV Results	ppbV RDL	ug/m3 Results	ug/m3 RDL	Qualifier	Dilution Factor
Volatile Organics in Air by SIM - Mansfield Lab						
trans-1,2-Dichloroethene	ND	0.020	ND	0.079		1
trans-1,3-Dichloropropene	ND	0.020	ND	0.091		1
Trichloroethene	ND	0.020	ND	0.107		1
Vinyl chloride	ND	0.020	ND	0.051		1
Isopropylbenzene	ND	0.500	ND	2.46		1

Project Name: UNIFIRST PROPERTY IA / VI
Project Number: 1-2114-2

Lab Number: L1004705
Report Date: 04/10/10

SAMPLE RESULTS

Lab ID: L1004705-18
Client ID: CAN 1646 FC 090
Sample Location: WOBURN, MA
Matrix: Air
Anaytical Method: 48,TO-15-SIM
Analytical Date: 04/09/10 02:05
Analyst: RY

Date Collected: 04/01/10 00:00
Date Received: 04/02/10
Field Prep: Not Specified

Parameter	ppbV Results	ppbV RDL	ug/m3 Results	ug/m3 RDL	Qualifier	Dilution Factor
Volatile Organics in Air by SIM - Mansfield Lab						
1,1,1-Trichloroethane	ND	0.020	ND	0.109		1
1,1,2-Trichloroethane	ND	0.020	ND	0.109		1
1,1-Dichloroethane	ND	0.020	ND	0.081		1
1,1-Dichloroethene	ND	0.020	ND	0.079		1
1,2,4-Trimethylbenzene	ND	0.020	ND	0.098		1
1,2-Dibromoethane	ND	0.020	ND	0.154		1
1,2-Dichloroethane	ND	0.020	ND	0.081		1
1,2-Dichloropropane	ND	0.020	ND	0.092		1
1,3-Butadiene	ND	0.020	ND	0.044		1
1,3-Dichlorobenzene	ND	0.020	ND	0.120		1
1,4-Dichlorobenzene	ND	0.020	ND	0.120		1
Benzene	ND	0.070	ND	0.223		1
Bromodichloromethane	ND	0.020	ND	0.134		1
Bromoform	ND	0.020	ND	0.206		1
Carbon tetrachloride	ND	0.020	ND	0.126		1
Chlorobenzene	ND	0.020	ND	0.092		1
Chloroform	ND	0.020	ND	0.098		1
cis-1,2-Dichloroethene	ND	0.020	ND	0.079		1
Ethylbenzene	ND	0.020	ND	0.087		1
Methylene chloride	ND	0.500	ND	1.74		1
Methyl tert butyl ether	ND	0.020	ND	0.072		1
Naphthalene	ND	0.050	ND	0.262		1
Xylenes, Total	ND	0.060	ND	0.260		1
Tetrachloroethene	ND	0.020	ND	0.136		1
Toluene	ND	0.050	ND	0.188		1

Project Name: UNIFIRST PROPERTY IA / VI

Project Number: 1-2114-2

Lab Number: L1004705

Report Date: 04/10/10

SAMPLE RESULTS

Lab ID: L1004705-18
Client ID: CAN 1646 FC 090
Sample Location: WOBURN, MA

Date Collected: 04/01/10 00:00
Date Received: 04/02/10
Field Prep: Not Specified

Parameter	ppbV Results	ppbV RDL	ug/m3 Results	ug/m3 RDL	Qualifier	Dilution Factor
Volatile Organics in Air by SIM - Mansfield Lab						
trans-1,2-Dichloroethene	ND	0.020	ND	0.079		1
trans-1,3-Dichloropropene	ND	0.020	ND	0.091		1
Trichloroethene	ND	0.020	ND	0.107		1
Vinyl chloride	ND	0.020	ND	0.051		1
Isopropylbenzene	ND	0.500	ND	2.46		1

Project Name: UNIFIRST PROPERTY IA / VI
Project Number: 1-2114-2

Lab Number: L1004705
Report Date: 04/10/10

SAMPLE RESULTS

Lab ID:	L1004705-19	Date Collected:	04/01/10 00:00
Client ID:	CAN 963 FC 451	Date Received:	04/02/10
Sample Location:	WOBURN, MA	Field Prep:	Not Specified
Matrix:	Air		
Anaytical Method:	48,TO-15-SIM		
Analytical Date:	04/09/10 02:39		
Analyst:	RY		

	ppbV		ug/m3			
Parameter	Results	RDL	Results	RDL	Qualifier	Dilution Factor
Volatile Organics in Air by SIM - Mansfield Lab						
1,1,1-Trichloroethane	ND	0.020	ND	0.109		1
1,1,2-Trichloroethane	ND	0.020	ND	0.109		1
1,1-Dichloroethane	ND	0.020	ND	0.081		1
1,1-Dichloroethene	ND	0.020	ND	0.079		1
1,2,4-Trimethylbenzene	ND	0.020	ND	0.098		1
1,2-Dibromoethane	ND	0.020	ND	0.154		1
1,2-Dichloroethane	ND	0.020	ND	0.081		1
1,2-Dichloropropane	ND	0.020	ND	0.092		1
1,3-Butadiene	ND	0.020	ND	0.044		1
1,3-Dichlorobenzene	ND	0.020	ND	0.120		1
1,4-Dichlorobenzene	ND	0.020	ND	0.120		1
Benzene	ND	0.070	ND	0.223		1
Bromodichloromethane	ND	0.020	ND	0.134		1
Bromoform	ND	0.020	ND	0.206		1
Carbon tetrachloride	ND	0.020	ND	0.126		1
Chlorobenzene	ND	0.020	ND	0.092		1
Chloroform	ND	0.020	ND	0.098		1
cis-1,2-Dichloroethene	ND	0.020	ND	0.079		1
Ethylbenzene	ND	0.020	ND	0.087		1
Methylene chloride	ND	0.500	ND	1.74		1
Methyl tert butyl ether	ND	0.020	ND	0.072		1
Naphthalene	ND	0.050	ND	0.262		1
Xylenes, Total	ND	0.060	ND	0.260		1
Tetrachloroethene	ND	0.020	ND	0.136		1
Toluene	ND	0.050	ND	0.188		1

Project Name: UNIFIRST PROPERTY IA / VI

Project Number: 1-2114-2

Lab Number: L1004705

Report Date: 04/10/10

SAMPLE RESULTS

Lab ID: L1004705-19
Client ID: CAN 963 FC 451
Sample Location: WOBURN, MA

Date Collected: 04/01/10 00:00
Date Received: 04/02/10
Field Prep: Not Specified

Parameter	ppbV Results	ppbV RDL	ug/m3 Results	ug/m3 RDL	Qualifier	Dilution Factor
Volatile Organics in Air by SIM - Mansfield Lab						
trans-1,2-Dichloroethene	ND	0.020	ND	0.079		1
trans-1,3-Dichloropropene	ND	0.020	ND	0.091		1
Trichloroethene	ND	0.020	ND	0.107		1
Vinyl chloride	ND	0.020	ND	0.051		1
Isopropylbenzene	ND	0.500	ND	2.46		1

Project Name: UNIFIRST PROPERTY IA / VI
Project Number: 1-2114-2

Lab Number: L1004705
Report Date: 04/10/10

SAMPLE RESULTS

Lab ID: L1004705-20
Client ID: CAN 1556 FC 390
Sample Location: WOBURN, MA
Matrix: Air
Anaytical Method: 48,TO-15-SIM
Analytical Date: 04/09/10 03:14
Analyst: RY

Date Collected: 04/01/10 00:00
Date Received: 04/02/10
Field Prep: Not Specified

Parameter	ppbV Results	ppbV RDL	ug/m3 Results	ug/m3 RDL	Qualifier	Dilution Factor
Volatile Organics in Air by SIM - Mansfield Lab						
1,1,1-Trichloroethane	ND	0.020	ND	0.109		1
1,1,2-Trichloroethane	ND	0.020	ND	0.109		1
1,1-Dichloroethane	ND	0.020	ND	0.081		1
1,1-Dichloroethene	ND	0.020	ND	0.079		1
1,2,4-Trimethylbenzene	ND	0.020	ND	0.098		1
1,2-Dibromoethane	ND	0.020	ND	0.154		1
1,2-Dichloroethane	ND	0.020	ND	0.081		1
1,2-Dichloropropane	ND	0.020	ND	0.092		1
1,3-Butadiene	ND	0.020	ND	0.044		1
1,3-Dichlorobenzene	ND	0.020	ND	0.120		1
1,4-Dichlorobenzene	ND	0.020	ND	0.120		1
Benzene	ND	0.070	ND	0.223		1
Bromodichloromethane	ND	0.020	ND	0.134		1
Bromoform	ND	0.020	ND	0.206		1
Carbon tetrachloride	ND	0.020	ND	0.126		1
Chlorobenzene	ND	0.020	ND	0.092		1
Chloroform	ND	0.020	ND	0.098		1
cis-1,2-Dichloroethene	ND	0.020	ND	0.079		1
Ethylbenzene	ND	0.020	ND	0.087		1
Methylene chloride	ND	0.500	ND	1.74		1
Methyl tert butyl ether	ND	0.020	ND	0.072		1
Naphthalene	ND	0.050	ND	0.262		1
Xylenes, Total	ND	0.060	ND	0.260		1
Tetrachloroethene	ND	0.020	ND	0.136		1
Toluene	ND	0.050	ND	0.188		1

Project Name: UNIFIRST PROPERTY IA / VI

Project Number: 1-2114-2

Lab Number: L1004705

Report Date: 04/10/10

SAMPLE RESULTS

Lab ID: L1004705-20
Client ID: CAN 1556 FC 390
Sample Location: WOBURN, MA

Date Collected: 04/01/10 00:00
Date Received: 04/02/10
Field Prep: Not Specified

Parameter	ppbV Results	ppbV RDL	ug/m3 Results	ug/m3 RDL	Qualifier	Dilution Factor
Volatile Organics in Air by SIM - Mansfield Lab						
trans-1,2-Dichloroethene	ND	0.020	ND	0.079		1
trans-1,3-Dichloropropene	ND	0.020	ND	0.091		1
Trichloroethene	ND	0.020	ND	0.107		1
Vinyl chloride	ND	0.020	ND	0.051		1
Isopropylbenzene	ND	0.500	ND	2.46		1

Project Name: UNIFIRST PROPERTY IA / VI

Project Number: 1-2114-2

Lab Number: L1004705

Report Date: 04/10/10

Method Blank Analysis
Batch Quality Control

Analytical Method: 48,TO-15-SIM
Analytical Date: 04/08/10 14:34

Parameter	ppbV Results	ppbV RDL	ug/m3 Results	ug/m3 RDL	Qualifier	Dilution Factor
Volatile Organics in Air by SIM - Mansfield Lab for sample(s): 01-20 Batch: WG406613-4						
1,1,1-Trichloroethane	ND	0.020	ND	0.109		1
1,1,2-Trichloroethane	ND	0.020	ND	0.109		1
1,1-Dichloroethane	ND	0.020	ND	0.081		1
1,1-Dichloroethene	ND	0.020	ND	0.079		1
1,2,4-Trimethylbenzene	ND	0.020	ND	0.098		1
1,2-Dibromoethane	ND	0.020	ND	0.154		1
1,2-Dichloroethane	ND	0.020	ND	0.081		1
1,2-Dichloropropane	ND	0.020	ND	0.092		1
1,3-Butadiene	ND	0.020	ND	0.044		1
1,3-Dichlorobenzene	ND	0.020	ND	0.120		1
1,4-Dichlorobenzene	ND	0.020	ND	0.120		1
Benzene	ND	0.070	ND	0.223		1
Bromodichloromethane	ND	0.020	ND	0.134		1
Bromoform	ND	0.020	ND	0.206		1
Carbon tetrachloride	ND	0.020	ND	0.126		1
Chlorobenzene	ND	0.020	ND	0.092		1
Chloroform	ND	0.020	ND	0.098		1
cis-1,2-Dichloroethene	ND	0.020	ND	0.079		1
Ethylbenzene	ND	0.020	ND	0.087		1
Methylene chloride	ND	0.500	ND	1.74		1
Methyl tert butyl ether	ND	0.020	ND	0.072		1
Naphthalene	ND	0.050	ND	0.262		1
Xylenes, Total	ND	0.060	ND	0.260		1
Tetrachloroethene	ND	0.020	ND	0.136		1
Toluene	ND	0.050	ND	0.188		1

Project Name: UNIFIRST PROPERTY IA / VI

Project Number: 1-2114-2

Lab Number: L1004705

Report Date: 04/10/10

Method Blank Analysis
Batch Quality Control

Analytical Method: 48,TO-15-SIM
Analytical Date: 04/08/10 14:34

Parameter	ppbV Results	ppbV RDL	ug/m3 Results	ug/m3 RDL	Qualifier	Dilution Factor
Volatile Organics in Air by SIM - Mansfield Lab for sample(s): 01-20 Batch: WG406613-4						
trans-1,2-Dichloroethene	ND	0.020	ND	0.079		1
trans-1,3-Dichloropropene	ND	0.020	ND	0.091		1
Trichloroethene	ND	0.020	ND	0.107		1
Vinyl chloride	ND	0.020	ND	0.051		1
Isopropylbenzene	ND	0.500	ND	2.46		1

Lab Control Sample Analysis
Batch Quality Control

Project Name: UNIFIRST PROPERTY IA / VI

Project Number: 1-2114-2

Lab Number: L1004705

Report Date: 04/10/10

Parameter	LCS %Recovery	Qual	LCSD %Recovery	Qual	%Recovery Limits	RPD	Qual	RPD Limits
Volatile Organics in Air by SIM - Mansfield Lab Associated sample(s): 01-20 Batch: WG406613-3								
1,1,1-Trichloroethane	101		-		70-130	-		25
1,1,2-Trichloroethane	93		-		70-130	-		25
1,1-Dichloroethane	89		-		70-130	-		25
1,1-Dichloroethene	89		-		70-130	-		25
1,2,4-Trimethylbenzene	89		-		70-130	-		25
1,2-Dibromoethane	94		-		70-130	-		25
1,2-Dichloroethane	96		-		70-130	-		25
1,2-Dichloropropane	89		-		70-130	-		25
1,3-Butadiene	105		-		70-130	-		25
1,3-Dichlorobenzene	100		-		70-130	-		25
1,4-Dichlorobenzene	102		-		70-130	-		25
Benzene	87		-		70-130	-		25
Bromodichloromethane	97		-		70-130	-		25
Bromoform	102		-		70-130	-		25
Carbon tetrachloride	108		-		70-130	-		25
Chlorobenzene	93		-		70-130	-		25
Chloroform	94		-		70-130	-		25
cis-1,2-Dichloroethene	93		-		70-130	-		25
Ethylbenzene	82		-		70-130	-		25
Methylene chloride	80		-		70-130	-		25
Methyl tert butyl ether	72		-		70-130	-		25

Lab Control Sample Analysis

Batch Quality Control

Project Name: UNIFIRST PROPERTY IA / VI

Project Number: 1-2114-2

Lab Number: L1004705

Report Date: 04/10/10

Parameter	LCS %Recovery	Qual	LCSD %Recovery	Qual	%Recovery Limits	RPD	Qual	RPD Limits
Volatile Organics in Air by SIM - Mansfield Lab Associated sample(s): 01-20 Batch: WG406613-3								
Naphthalene	102		-		70-130	-		25
XYLENE (TOTAL)	83		-		70-130	-		25
Tetrachloroethene	96		-		70-130	-		25
Toluene	83		-		70-130	-		25
trans-1,2-Dichloroethene	91		-		70-130	-		25
trans-1,3-Dichloropropene	83		-		70-130	-		25
Trichloroethene	96		-		70-130	-		25
Vinyl chloride	95		-		70-130	-		25
Isopropylbenzene	79		-		70-130	-		25

Project Name: UNIFIRST PROPERTY IA / VI **Lab Number:** L1004705

Project Number: 1-2114-2 **Report Date:** 04/10/10

SAMPLE RESULTS

Lab ID:	L1004705-01	Date Collected:	04/01/10 00:00
Client ID:	CAN 652 FC 466	Date Received:	04/02/10
Sample Location:	WOBURN, MA	Field Prep:	Not Specified
Matrix:	Air		
Analytical Method:	96,APH		
Analytical Date:	04/08/10 15:51		
Analyst:	RY		

Quality Control Information

Sample Type:	100 ml/min Composite
Sample Container Type:	Canister - 6 Liter
Sampling Flow Controller:	Mechanical
Sampling Zone:	Unknown
Sampling Flow Meter RPD of pre & post-sampling calibration check:	<=20%
Were all QA/QC procedures REQUIRED by the method followed?	Yes
Were all performance/acceptance standards for the required procedures achieved?	Yes
Were significant modifications made to the method as specified in Sect 11.1.2?	No

Parameter	Result	Qualifier	Units	RDL	Dilution Factor
Petroleum Hydrocarbons in Air - Mansfield Lab					
1,3-Butadiene	ND		ug/m3	2.0	1
Methyl tert butyl ether	ND		ug/m3	2.0	1
Benzene	ND		ug/m3	2.0	1
Toluene	ND		ug/m3	2.0	1
Ethylbenzene	ND		ug/m3	2.0	1
p/m-Xylene	ND		ug/m3	4.0	1
o-Xylene	ND		ug/m3	2.0	1
Naphthalene	ND		ug/m3	2.0	1
C5-C8 Aliphatics, Adjusted	ND		ug/m3	12	1
C9-C12 Aliphatics, Adjusted	ND		ug/m3	14	1
C9-C10 Aromatics	ND		ug/m3	10	1

Project Name: UNIFIRST PROPERTY IA / VI **Lab Number:** L1004705

Project Number: 1-2114-2 **Report Date:** 04/10/10

SAMPLE RESULTS

Lab ID:	L1004705-02	Date Collected:	04/01/10 00:00
Client ID:	CAN 998 FC 045	Date Received:	04/02/10
Sample Location:	WOBURN, MA	Field Prep:	Not Specified
Matrix:	Air		
Analytical Method:	96,APH		
Analytical Date:	04/08/10 16:27		
Analyst:	RY		

Quality Control Information

Sample Type:	100 ml/min Composite
Sample Container Type:	Canister - 6 Liter
Sampling Flow Controller:	Mechanical
Sampling Zone:	Unknown
Sampling Flow Meter RPD of pre & post-sampling calibration check:	<=20%
Were all QA/QC procedures REQUIRED by the method followed?	Yes
Were all performance/acceptance standards for the required procedures achieved?	Yes
Were significant modifications made to the method as specified in Sect 11.1.2?	No

Parameter	Result	Qualifier	Units	RDL	Dilution Factor
Petroleum Hydrocarbons in Air - Mansfield Lab					
1,3-Butadiene	ND		ug/m3	2.0	1
Methyl tert butyl ether	ND		ug/m3	2.0	1
Benzene	ND		ug/m3	2.0	1
Toluene	ND		ug/m3	2.0	1
Ethylbenzene	ND		ug/m3	2.0	1
p/m-Xylene	ND		ug/m3	4.0	1
o-Xylene	ND		ug/m3	2.0	1
Naphthalene	ND		ug/m3	2.0	1
C5-C8 Aliphatics, Adjusted	ND		ug/m3	12	1
C9-C12 Aliphatics, Adjusted	ND		ug/m3	14	1
C9-C10 Aromatics	ND		ug/m3	10	1

Project Name: UNIFIRST PROPERTY IA / VI **Lab Number:** L1004705

Project Number: 1-2114-2 **Report Date:** 04/10/10

SAMPLE RESULTS

Lab ID:	L1004705-03	Date Collected:	04/01/10 00:00
Client ID:	CAN 1706 FC 291	Date Received:	04/02/10
Sample Location:	WOBURN, MA	Field Prep:	Not Specified
Matrix:	Air		
Analytical Method:	96,APH		
Analytical Date:	04/08/10 18:28		
Analyst:	RY		

Quality Control Information

Sample Type:	100 ml/min Composite
Sample Container Type:	Canister - 6 Liter
Sampling Flow Controller:	Mechanical
Sampling Zone:	Unknown
Sampling Flow Meter RPD of pre & post-sampling calibration check:	<=20%
Were all QA/QC procedures REQUIRED by the method followed?	Yes
Were all performance/acceptance standards for the required procedures achieved?	Yes
Were significant modifications made to the method as specified in Sect 11.1.2?	No

Parameter	Result	Qualifier	Units	RDL	Dilution Factor
Petroleum Hydrocarbons in Air - Mansfield Lab					
1,3-Butadiene	ND		ug/m3	2.0	1
Methyl tert butyl ether	ND		ug/m3	2.0	1
Benzene	ND		ug/m3	2.0	1
Toluene	ND		ug/m3	2.0	1
Ethylbenzene	ND		ug/m3	2.0	1
p/m-Xylene	ND		ug/m3	4.0	1
o-Xylene	ND		ug/m3	2.0	1
Naphthalene	ND		ug/m3	2.0	1
C5-C8 Aliphatics, Adjusted	ND		ug/m3	12	1
C9-C12 Aliphatics, Adjusted	ND		ug/m3	14	1
C9-C10 Aromatics	ND		ug/m3	10	1

Project Name: UNIFIRST PROPERTY IA / VI **Lab Number:** L1004705

Project Number: 1-2114-2 **Report Date:** 04/10/10

SAMPLE RESULTS

Lab ID:	L1004705-04	Date Collected:	04/01/10 00:00
Client ID:	CAN 1692 FC 368	Date Received:	04/02/10
Sample Location:	WOBURN, MA	Field Prep:	Not Specified
Matrix:	Air		
Analytical Method:	96,APH		
Analytical Date:	04/08/10 17:01		
Analyst:	RY		

Quality Control Information

Sample Type:	100 ml/min Composite
Sample Container Type:	Canister - 6 Liter
Sampling Flow Controller:	Mechanical
Sampling Zone:	Unknown
Sampling Flow Meter RPD of pre & post-sampling calibration check:	<=20%
Were all QA/QC procedures REQUIRED by the method followed?	Yes
Were all performance/acceptance standards for the required procedures achieved?	Yes
Were significant modifications made to the method as specified in Sect 11.1.2?	No

Parameter	Result	Qualifier	Units	RDL	Dilution Factor
Petroleum Hydrocarbons in Air - Mansfield Lab					
1,3-Butadiene	ND		ug/m3	2.0	1
Methyl tert butyl ether	ND		ug/m3	2.0	1
Benzene	ND		ug/m3	2.0	1
Toluene	ND		ug/m3	2.0	1
Ethylbenzene	ND		ug/m3	2.0	1
p/m-Xylene	ND		ug/m3	4.0	1
o-Xylene	ND		ug/m3	2.0	1
Naphthalene	ND		ug/m3	2.0	1
C5-C8 Aliphatics, Adjusted	ND		ug/m3	12	1
C9-C12 Aliphatics, Adjusted	ND		ug/m3	14	1
C9-C10 Aromatics	ND		ug/m3	10	1

Project Name:	UNIFIRST PROPERTY IA / VI	**Lab Number:**	L1004705
Project Number:	1-2114-2	**Report Date:**	04/10/10

SAMPLE RESULTS

Lab ID:	L1004705-05	Date Collected:	04/01/10 00:00
Client ID:	CAN 965 FC 367	Date Received:	04/02/10
Sample Location:	WOBURN, MA	Field Prep:	Not Specified
Matrix:	Air		
Analytical Method:	96,APH		
Analytical Date:	04/08/10 17:35		
Analyst:	RY		

Quality Control Information

Sample Type:	100 ml/min Composite
Sample Container Type:	Canister - 6 Liter
Sampling Flow Controller:	Mechanical
Sampling Zone:	Unknown
Sampling Flow Meter RPD of pre & post-sampling calibration check:	<=20%
Were all QA/QC procedures REQUIRED by the method followed?	Yes
Were all performance/acceptance standards for the required procedures achieved?	Yes
Were significant modifications made to the method as specified in Sect 11.1.2?	No

Parameter	Result	Qualifier	Units	RDL	Dilution Factor
Petroleum Hydrocarbons in Air - Mansfield Lab					
1,3-Butadiene	ND		ug/m3	2.0	1
Methyl tert butyl ether	ND		ug/m3	2.0	1
Benzene	ND		ug/m3	2.0	1
Toluene	ND		ug/m3	2.0	1
Ethylbenzene	ND		ug/m3	2.0	1
p/m-Xylene	ND		ug/m3	4.0	1
o-Xylene	ND		ug/m3	2.0	1
Naphthalene	ND		ug/m3	2.0	1
C5-C8 Aliphatics, Adjusted	ND		ug/m3	12	1
C9-C12 Aliphatics, Adjusted	ND		ug/m3	14	1
C9-C10 Aromatics	ND		ug/m3	10	1

Project Name: UNIFIRST PROPERTY IA / VI **Lab Number:** L1004705

Project Number: 1-2114-2 **Report Date:** 04/10/10

SAMPLE RESULTS

Lab ID:	L1004705-06	Date Collected:	04/01/10 00:00
Client ID:	CAN 587 FC 465	Date Received:	04/02/10
Sample Location:	WOBURN, MA	Field Prep:	Not Specified
Matrix:	Air		
Analytical Method:	96,APH		
Analytical Date:	04/08/10 19:03		
Analyst:	RY		

Quality Control Information

Sample Type:	100 ml/min Composite
Sample Container Type:	Canister - 6 Liter
Sampling Flow Controller:	Mechanical
Sampling Zone:	Unknown
Sampling Flow Meter RPD of pre & post-sampling calibration check:	<=20%
Were all QA/QC procedures REQUIRED by the method followed?	Yes
Were all performance/acceptance standards for the required procedures achieved?	Yes
Were significant modifications made to the method as specified in Sect 11.1.2?	No

Parameter	Result	Qualifier	Units	RDL	Dilution Factor
Petroleum Hydrocarbons in Air - Mansfield Lab					
1,3-Butadiene	ND		ug/m3	2.0	1
Methyl tert butyl ether	ND		ug/m3	2.0	1
Benzene	ND		ug/m3	2.0	1
Toluene	ND		ug/m3	2.0	1
Ethylbenzene	ND		ug/m3	2.0	1
p/m-Xylene	ND		ug/m3	4.0	1
o-Xylene	ND		ug/m3	2.0	1
Naphthalene	ND		ug/m3	2.0	1
C5-C8 Aliphatics, Adjusted	ND		ug/m3	12	1
C9-C12 Aliphatics, Adjusted	ND		ug/m3	14	1
C9-C10 Aromatics	ND		ug/m3	10	1

Project Name: UNIFIRST PROPERTY IA / VI **Lab Number:** L1004705

Project Number: 1-2114-2 **Report Date:** 04/10/10

SAMPLE RESULTS

Lab ID:	L1004705-07	Date Collected:	04/01/10 00:00
Client ID:	CAN 956 FC 019	Date Received:	04/02/10
Sample Location:	WOBURN, MA	Field Prep:	Not Specified
Matrix:	Air		
Analytical Method:	96,APH		
Analytical Date:	04/08/10 19:38		
Analyst:	RY		

Quality Control Information

Sample Type:	100 ml/min Composite
Sample Container Type:	Canister - 6 Liter
Sampling Flow Controller:	Mechanical
Sampling Zone:	Unknown
Sampling Flow Meter RPD of pre & post-sampling calibration check:	<=20%
Were all QA/QC procedures REQUIRED by the method followed?	Yes
Were all performance/acceptance standards for the required procedures achieved?	Yes
Were significant modifications made to the method as specified in Sect 11.1.2?	No

Parameter	Result	Qualifier	Units	RDL	Dilution Factor
Petroleum Hydrocarbons in Air - Mansfield Lab					
1,3-Butadiene	ND		ug/m3	2.0	1
Methyl tert butyl ether	ND		ug/m3	2.0	1
Benzene	ND		ug/m3	2.0	1
Toluene	ND		ug/m3	2.0	1
Ethylbenzene	ND		ug/m3	2.0	1
p/m-Xylene	ND		ug/m3	4.0	1
o-Xylene	ND		ug/m3	2.0	1
Naphthalene	ND		ug/m3	2.0	1
C5-C8 Aliphatics, Adjusted	ND		ug/m3	12	1
C9-C12 Aliphatics, Adjusted	ND		ug/m3	14	1
C9-C10 Aromatics	ND		ug/m3	10	1

Project Name: UNIFIRST PROPERTY IA / VI **Lab Number:** L1004705

Project Number: 1-2114-2 **Report Date:** 04/10/10

SAMPLE RESULTS

Lab ID:	L1004705-08	Date Collected:	04/01/10 00:00
Client ID:	CAN 1520 FC 463	Date Received:	04/02/10
Sample Location:	WOBURN, MA	Field Prep:	Not Specified
Matrix:	Air		
Analytical Method:	96,APH		
Analytical Date:	04/08/10 20:13		
Analyst:	RY		

Quality Control Information

Sample Type:	100 ml/min Composite
Sample Container Type:	Canister - 6 Liter
Sampling Flow Controller:	Mechanical
Sampling Zone:	Unknown
Sampling Flow Meter RPD of pre & post-sampling calibration check:	<=20%
Were all QA/QC procedures REQUIRED by the method followed?	Yes
Were all performance/acceptance standards for the required procedures achieved?	Yes
Were significant modifications made to the method as specified in Sect 11.1.2?	No

Parameter	Result	Qualifier	Units	RDL	Dilution Factor
Petroleum Hydrocarbons in Air - Mansfield Lab					
1,3-Butadiene	ND		ug/m3	2.0	1
Methyl tert butyl ether	ND		ug/m3	2.0	1
Benzene	ND		ug/m3	2.0	1
Toluene	ND		ug/m3	2.0	1
Ethylbenzene	ND		ug/m3	2.0	1
p/m-Xylene	ND		ug/m3	4.0	1
o-Xylene	ND		ug/m3	2.0	1
Naphthalene	ND		ug/m3	2.0	1
C5-C8 Aliphatics, Adjusted	ND		ug/m3	12	1
C9-C12 Aliphatics, Adjusted	ND		ug/m3	14	1
C9-C10 Aromatics	ND		ug/m3	10	1

Project Name: UNIFIRST PROPERTY IA / VI **Lab Number:** L1004705

Project Number: 1-2114-2 **Report Date:** 04/10/10

SAMPLE RESULTS

Lab ID:	L1004705-09	Date Collected:	04/01/10 00:00
Client ID:	CAN 764 FC 257	Date Received:	04/02/10
Sample Location:	WOBURN, MA	Field Prep:	Not Specified
Matrix:	Air		
Analytical Method:	96,APH		
Analytical Date:	04/08/10 20:48		
Analyst:	RY		

Quality Control Information

Sample Type:	100 ml/min Composite
Sample Container Type:	Canister - 6 Liter
Sampling Flow Controller:	Mechanical
Sampling Zone:	Unknown
Sampling Flow Meter RPD of pre & post-sampling calibration check:	<=20%
Were all QA/QC procedures REQUIRED by the method followed?	Yes
Were all performance/acceptance standards for the required procedures achieved?	Yes
Were significant modifications made to the method as specified in Sect 11.1.2?	No

Parameter	Result	Qualifier	Units	RDL	Dilution Factor
Petroleum Hydrocarbons in Air - Mansfield Lab					
1,3-Butadiene	ND		ug/m3	2.0	1
Methyl tert butyl ether	ND		ug/m3	2.0	1
Benzene	ND		ug/m3	2.0	1
Toluene	ND		ug/m3	2.0	1
Ethylbenzene	ND		ug/m3	2.0	1
p/m-Xylene	ND		ug/m3	4.0	1
o-Xylene	ND		ug/m3	2.0	1
Naphthalene	ND		ug/m3	2.0	1
C5-C8 Aliphatics, Adjusted	ND		ug/m3	12	1
C9-C12 Aliphatics, Adjusted	ND		ug/m3	14	1
C9-C10 Aromatics	ND		ug/m3	10	1

Project Name: UNIFIRST PROPERTY IA / VI **Lab Number:** L1004705

Project Number: 1-2114-2 **Report Date:** 04/10/10

SAMPLE RESULTS

Lab ID:	L1004705-10	Date Collected:	04/01/10 00:00
Client ID:	CAN 1053 FC 269	Date Received:	04/02/10
Sample Location:	WOBURN, MA	Field Prep:	Not Specified
Matrix:	Air		
Analytical Method:	96,APH		
Analytical Date:	04/08/10 21:24		
Analyst:	RY		

Quality Control Information

Sample Type:	100 ml/min Composite
Sample Container Type:	Canister - 6 Liter
Sampling Flow Controller:	Mechanical
Sampling Zone:	Unknown
Sampling Flow Meter RPD of pre & post-sampling calibration check:	<=20%
Were all QA/QC procedures REQUIRED by the method followed?	Yes
Were all performance/acceptance standards for the required procedures achieved?	Yes
Were significant modifications made to the method as specified in Sect 11.1.2?	No

Parameter	Result	Qualifier	Units	RDL	Dilution Factor
Petroleum Hydrocarbons in Air - Mansfield Lab					
1,3-Butadiene	ND		ug/m3	2.0	1
Methyl tert butyl ether	ND		ug/m3	2.0	1
Benzene	ND		ug/m3	2.0	1
Toluene	ND		ug/m3	2.0	1
Ethylbenzene	ND		ug/m3	2.0	1
p/m-Xylene	ND		ug/m3	4.0	1
o-Xylene	ND		ug/m3	2.0	1
Naphthalene	ND		ug/m3	2.0	1
C5-C8 Aliphatics, Adjusted	ND		ug/m3	12	1
C9-C12 Aliphatics, Adjusted	ND		ug/m3	14	1
C9-C10 Aromatics	ND		ug/m3	10	1

Project Name: UNIFIRST PROPERTY IA / VI **Lab Number:** L1004705

Project Number: 1-2114-2 **Report Date:** 04/10/10

SAMPLE RESULTS

Lab ID:	L1004705-11	Date Collected:	04/01/10 00:00
Client ID:	CAN 1633 FC 208	Date Received:	04/02/10
Sample Location:	WOBURN, MA	Field Prep:	Not Specified
Matrix:	Air		
Analytical Method:	96,APH		
Analytical Date:	04/08/10 21:58		
Analyst:	RY		

Quality Control Information

Sample Type:	100 ml/min Composite
Sample Container Type:	Canister - 6 Liter
Sampling Flow Controller:	Mechanical
Sampling Zone:	Unknown
Sampling Flow Meter RPD of pre & post-sampling calibration check:	<=20%
Were all QA/QC procedures REQUIRED by the method followed?	Yes
Were all performance/acceptance standards for the required procedures achieved?	Yes
Were significant modifications made to the method as specified in Sect 11.1.2?	No

Parameter	Result	Qualifier	Units	RDL	Dilution Factor
Petroleum Hydrocarbons in Air - Mansfield Lab					
1,3-Butadiene	ND		ug/m3	2.0	1
Methyl tert butyl ether	ND		ug/m3	2.0	1
Benzene	ND		ug/m3	2.0	1
Toluene	ND		ug/m3	2.0	1
Ethylbenzene	ND		ug/m3	2.0	1
p/m-Xylene	ND		ug/m3	4.0	1
o-Xylene	ND		ug/m3	2.0	1
Naphthalene	ND		ug/m3	2.0	1
C5-C8 Aliphatics, Adjusted	ND		ug/m3	12	1
C9-C12 Aliphatics, Adjusted	ND		ug/m3	14	1
C9-C10 Aromatics	ND		ug/m3	10	1

Project Name: UNIFIRST PROPERTY IA / VI **Lab Number:** L1004705

Project Number: 1-2114-2 **Report Date:** 04/10/10

SAMPLE RESULTS

Lab ID:	L1004705-12	Date Collected:	04/01/10 00:00
Client ID:	CAN 1655 FC 275	Date Received:	04/02/10
Sample Location:	WOBURN, MA	Field Prep:	Not Specified
Matrix:	Air		
Analytical Method:	96,APH		
Analytical Date:	04/08/10 22:33		
Analyst:	RY		

Quality Control Information

Sample Type:	100 ml/min Composite
Sample Container Type:	Canister - 6 Liter
Sampling Flow Controller:	Mechanical
Sampling Zone:	Unknown
Sampling Flow Meter RPD of pre & post-sampling calibration check:	<=20%
Were all QA/QC procedures REQUIRED by the method followed?	Yes
Were all performance/acceptance standards for the required procedures achieved?	Yes
Were significant modifications made to the method as specified in Sect 11.1.2?	No

Parameter	Result	Qualifier	Units	RDL	Dilution Factor
Petroleum Hydrocarbons in Air - Mansfield Lab					
1,3-Butadiene	ND		ug/m3	2.0	1
Methyl tert butyl ether	ND		ug/m3	2.0	1
Benzene	ND		ug/m3	2.0	1
Toluene	ND		ug/m3	2.0	1
Ethylbenzene	ND		ug/m3	2.0	1
p/m-Xylene	ND		ug/m3	4.0	1
o-Xylene	ND		ug/m3	2.0	1
Naphthalene	ND		ug/m3	2.0	1
C5-C8 Aliphatics, Adjusted	ND		ug/m3	12	1
C9-C12 Aliphatics, Adjusted	ND		ug/m3	14	1
C9-C10 Aromatics	ND		ug/m3	10	1

Project Name: UNIFIRST PROPERTY IA / VI **Lab Number:** L1004705

Project Number: 1-2114-2 **Report Date:** 04/10/10

SAMPLE RESULTS

Lab ID:	L1004705-13	Date Collected:	04/01/10 00:00
Client ID:	CAN 969 FC 158	Date Received:	04/02/10
Sample Location:	WOBURN, MA	Field Prep:	Not Specified
Matrix:	Air		
Analytical Method:	96,APH		
Analytical Date:	04/08/10 23:10		
Analyst:	RY		

Quality Control Information

Sample Type:	100 ml/min Composite
Sample Container Type:	Canister - 6 Liter
Sampling Flow Controller:	Mechanical
Sampling Zone:	Unknown
Sampling Flow Meter RPD of pre & post-sampling calibration check:	<=20%
Were all QA/QC procedures REQUIRED by the method followed?	Yes
Were all performance/acceptance standards for the required procedures achieved?	Yes
Were significant modifications made to the method as specified in Sect 11.1.2?	No

Parameter	Result	Qualifier	Units	RDL	Dilution Factor
Petroleum Hydrocarbons in Air - Mansfield Lab					
1,3-Butadiene	ND		ug/m3	2.0	1
Methyl tert butyl ether	ND		ug/m3	2.0	1
Benzene	ND		ug/m3	2.0	1
Toluene	ND		ug/m3	2.0	1
Ethylbenzene	ND		ug/m3	2.0	1
p/m-Xylene	ND		ug/m3	4.0	1
o-Xylene	ND		ug/m3	2.0	1
Naphthalene	ND		ug/m3	2.0	1
C5-C8 Aliphatics, Adjusted	ND		ug/m3	12	1
C9-C12 Aliphatics, Adjusted	ND		ug/m3	14	1
C9-C10 Aromatics	ND		ug/m3	10	1

Project Name: UNIFIRST PROPERTY IA / VI **Lab Number:** L1004705

Project Number: 1-2114-2 **Report Date:** 04/10/10

SAMPLE RESULTS

Lab ID:	L1004705-14	Date Collected:	04/01/10 00:00
Client ID:	CAN 696 FC 303	Date Received:	04/02/10
Sample Location:	WOBURN, MA	Field Prep:	Not Specified
Matrix:	Air		
Analytical Method:	96,APH		
Analytical Date:	04/08/10 23:44		
Analyst:	RY		

Quality Control Information

Sample Type:	100 ml/min Composite
Sample Container Type:	Canister - 6 Liter
Sampling Flow Controller:	Mechanical
Sampling Zone:	Unknown
Sampling Flow Meter RPD of pre & post-sampling calibration check:	<=20%
Were all QA/QC procedures REQUIRED by the method followed?	Yes
Were all performance/acceptance standards for the required procedures achieved?	Yes
Were significant modifications made to the method as specified in Sect 11.1.2?	No

Parameter	Result	Qualifier	Units	RDL	Dilution Factor
Petroleum Hydrocarbons in Air - Mansfield Lab					
1,3-Butadiene	ND		ug/m3	2.0	1
Methyl tert butyl ether	ND		ug/m3	2.0	1
Benzene	ND		ug/m3	2.0	1
Toluene	ND		ug/m3	2.0	1
Ethylbenzene	ND		ug/m3	2.0	1
p/m-Xylene	ND		ug/m3	4.0	1
o-Xylene	ND		ug/m3	2.0	1
Naphthalene	ND		ug/m3	2.0	1
C5-C8 Aliphatics, Adjusted	ND		ug/m3	12	1
C9-C12 Aliphatics, Adjusted	ND		ug/m3	14	1
C9-C10 Aromatics	ND		ug/m3	10	1

Project Name: UNIFIRST PROPERTY IA / VI **Lab Number:** L1004705

Project Number: 1-2114-2 **Report Date:** 04/10/10

SAMPLE RESULTS

Lab ID:	L1004705-15	Date Collected:	04/01/10 00:00
Client ID:	CAN 1562 FC 166	Date Received:	04/02/10
Sample Location:	WOBURN, MA	Field Prep:	Not Specified
Matrix:	Air		
Analytical Method:	96,APH		
Analytical Date:	04/09/10 00:19		
Analyst:	RY		

Quality Control Information

Sample Type:	100 ml/min Composite
Sample Container Type:	Canister - 6 Liter
Sampling Flow Controller:	Mechanical
Sampling Zone:	Unknown
Sampling Flow Meter RPD of pre & post-sampling calibration check:	<=20%
Were all QA/QC procedures REQUIRED by the method followed?	Yes
Were all performance/acceptance standards for the required procedures achieved?	Yes
Were significant modifications made to the method as specified in Sect 11.1.2?	No

Parameter	Result	Qualifier	Units	RDL	Dilution Factor
Petroleum Hydrocarbons in Air - Mansfield Lab					
1,3-Butadiene	ND		ug/m3	2.0	1
Methyl tert butyl ether	ND		ug/m3	2.0	1
Benzene	ND		ug/m3	2.0	1
Toluene	ND		ug/m3	2.0	1
Ethylbenzene	ND		ug/m3	2.0	1
p/m-Xylene	ND		ug/m3	4.0	1
o-Xylene	ND		ug/m3	2.0	1
Naphthalene	ND		ug/m3	2.0	1
C5-C8 Aliphatics, Adjusted	ND		ug/m3	12	1
C9-C12 Aliphatics, Adjusted	ND		ug/m3	14	1
C9-C10 Aromatics	ND		ug/m3	10	1

Project Name: UNIFIRST PROPERTY IA / VI **Lab Number:** L1004705

Project Number: 1-2114-2 **Report Date:** 04/10/10

SAMPLE RESULTS

Lab ID:	L1004705-16	Date Collected:	04/01/10 00:00
Client ID:	CAN 1576 FC 343	Date Received:	04/02/10
Sample Location:	WOBURN, MA	Field Prep:	Not Specified
Matrix:	Air		
Analytical Method:	96,APH		
Analytical Date:	04/09/10 00:55		
Analyst:	RY		

Quality Control Information

Sample Type:	100 ml/min Composite
Sample Container Type:	Canister - 6 Liter
Sampling Flow Controller:	Mechanical
Sampling Zone:	Unknown
Sampling Flow Meter RPD of pre & post-sampling calibration check:	<=20%
Were all QA/QC procedures REQUIRED by the method followed?	Yes
Were all performance/acceptance standards for the required procedures achieved?	Yes
Were significant modifications made to the method as specified in Sect 11.1.2?	No

Parameter	Result	Qualifier	Units	RDL	Dilution Factor
Petroleum Hydrocarbons in Air - Mansfield Lab					
1,3-Butadiene	ND		ug/m3	2.0	1
Methyl tert butyl ether	ND		ug/m3	2.0	1
Benzene	ND		ug/m3	2.0	1
Toluene	ND		ug/m3	2.0	1
Ethylbenzene	ND		ug/m3	2.0	1
p/m-Xylene	ND		ug/m3	4.0	1
o-Xylene	ND		ug/m3	2.0	1
Naphthalene	ND		ug/m3	2.0	1
C5-C8 Aliphatics, Adjusted	ND		ug/m3	12	1
C9-C12 Aliphatics, Adjusted	ND		ug/m3	14	1
C9-C10 Aromatics	ND		ug/m3	10	1

Project Name: UNIFIRST PROPERTY IA / VI **Lab Number:** L1004705

Project Number: 1-2114-2 **Report Date:** 04/10/10

SAMPLE RESULTS

Lab ID:	L1004705-17	Date Collected:	04/01/10 00:00
Client ID:	CAN 932 FC 332	Date Received:	04/02/10
Sample Location:	WOBURN, MA	Field Prep:	Not Specified
Matrix:	Air		
Analytical Method:	96,APH		
Analytical Date:	04/09/10 01:28		
Analyst:	RY		

Quality Control Information

Sample Type:	100 ml/min Composite
Sample Container Type:	Canister - 6 Liter
Sampling Flow Controller:	Mechanical
Sampling Zone:	Unknown
Sampling Flow Meter RPD of pre & post-sampling calibration check:	<=20%
Were all QA/QC procedures REQUIRED by the method followed?	Yes
Were all performance/acceptance standards for the required procedures achieved?	Yes
Were significant modifications made to the method as specified in Sect 11.1.2?	No

Parameter	Result	Qualifier	Units	RDL	Dilution Factor
Petroleum Hydrocarbons in Air - Mansfield Lab					
1,3-Butadiene	ND		ug/m3	2.0	1
Methyl tert butyl ether	ND		ug/m3	2.0	1
Benzene	ND		ug/m3	2.0	1
Toluene	ND		ug/m3	2.0	1
Ethylbenzene	ND		ug/m3	2.0	1
p/m-Xylene	ND		ug/m3	4.0	1
o-Xylene	ND		ug/m3	2.0	1
Naphthalene	ND		ug/m3	2.0	1
C5-C8 Aliphatics, Adjusted	ND		ug/m3	12	1
C9-C12 Aliphatics, Adjusted	ND		ug/m3	14	1
C9-C10 Aromatics	ND		ug/m3	10	1

Project Name: UNIFIRST PROPERTY IA / VI **Lab Number:** L1004705

Project Number: 1-2114-2 **Report Date:** 04/10/10

SAMPLE RESULTS

Lab ID:	L1004705-18	Date Collected:	04/01/10 00:00
Client ID:	CAN 1646 FC 090	Date Received:	04/02/10
Sample Location:	WOBURN, MA	Field Prep:	Not Specified
Matrix:	Air		
Analytical Method:	96,APH		
Analytical Date:	04/09/10 02:05		
Analyst:	RY		

Quality Control Information

Sample Type:	100 ml/min Composite
Sample Container Type:	Canister - 6 Liter
Sampling Flow Controller:	Mechanical
Sampling Zone:	Unknown
Sampling Flow Meter RPD of pre & post-sampling calibration check:	<=20%
Were all QA/QC procedures REQUIRED by the method followed?	Yes
Were all performance/acceptance standards for the required procedures achieved?	Yes
Were significant modifications made to the method as specified in Sect 11.1.2?	No

Parameter	Result	Qualifier	Units	RDL	Dilution Factor
Petroleum Hydrocarbons in Air - Mansfield Lab					
1,3-Butadiene	ND		ug/m3	2.0	1
Methyl tert butyl ether	ND		ug/m3	2.0	1
Benzene	ND		ug/m3	2.0	1
Toluene	ND		ug/m3	2.0	1
Ethylbenzene	ND		ug/m3	2.0	1
p/m-Xylene	ND		ug/m3	4.0	1
o-Xylene	ND		ug/m3	2.0	1
Naphthalene	ND		ug/m3	2.0	1
C5-C8 Aliphatics, Adjusted	ND		ug/m3	12	1
C9-C12 Aliphatics, Adjusted	ND		ug/m3	14	1
C9-C10 Aromatics	ND		ug/m3	10	1

Project Name: UNIFIRST PROPERTY IA / VI **Lab Number:** L1004705

Project Number: 1-2114-2 **Report Date:** 04/10/10

SAMPLE RESULTS

Lab ID:	L1004705-19	Date Collected:	04/01/10 00:00
Client ID:	CAN 963 FC 451	Date Received:	04/02/10
Sample Location:	WOBURN, MA	Field Prep:	Not Specified
Matrix:	Air		
Analytical Method:	96,APH		
Analytical Date:	04/09/10 02:39		
Analyst:	RY		

Quality Control Information

Sample Type:	100 ml/min Composite
Sample Container Type:	Canister - 6 Liter
Sampling Flow Controller:	Mechanical
Sampling Zone:	Unknown
Sampling Flow Meter RPD of pre & post-sampling calibration check:	<=20%
Were all QA/QC procedures REQUIRED by the method followed?	Yes
Were all performance/acceptance standards for the required procedures achieved?	Yes
Were significant modifications made to the method as specified in Sect 11.1.2?	No

Parameter	Result	Qualifier	Units	RDL	Dilution Factor
Petroleum Hydrocarbons in Air - Mansfield Lab					
1,3-Butadiene	ND		ug/m3	2.0	1
Methyl tert butyl ether	ND		ug/m3	2.0	1
Benzene	ND		ug/m3	2.0	1
Toluene	ND		ug/m3	2.0	1
Ethylbenzene	ND		ug/m3	2.0	1
p/m-Xylene	ND		ug/m3	4.0	1
o-Xylene	ND		ug/m3	2.0	1
Naphthalene	ND		ug/m3	2.0	1
C5-C8 Aliphatics, Adjusted	ND		ug/m3	12	1
C9-C12 Aliphatics, Adjusted	ND		ug/m3	14	1
C9-C10 Aromatics	ND		ug/m3	10	1

Project Name: UNIFIRST PROPERTY IA / VI **Lab Number:** L1004705

Project Number: 1-2114-2 **Report Date:** 04/10/10

SAMPLE RESULTS

Lab ID:	L1004705-20	Date Collected:	04/01/10 00:00
Client ID:	CAN 1556 FC 390	Date Received:	04/02/10
Sample Location:	WOBURN, MA	Field Prep:	Not Specified
Matrix:	Air		
Analytical Method:	96,APH		
Analytical Date:	04/09/10 03:14		
Analyst:	RY		

Quality Control Information

Sample Type:	100 ml/min Composite
Sample Container Type:	Canister - 6 Liter
Sampling Flow Controller:	Mechanical
Sampling Zone:	Unknown
Sampling Flow Meter RPD of pre & post-sampling calibration check:	<=20%
Were all QA/QC procedures REQUIRED by the method followed?	Yes
Were all performance/acceptance standards for the required procedures achieved?	Yes
Were significant modifications made to the method as specified in Sect 11.1.2?	No

Parameter	Result	Qualifier	Units	RDL	Dilution Factor
Petroleum Hydrocarbons in Air - Mansfield Lab					
1,3-Butadiene	ND		ug/m3	2.0	1
Methyl tert butyl ether	ND		ug/m3	2.0	1
Benzene	ND		ug/m3	2.0	1
Toluene	ND		ug/m3	2.0	1
Ethylbenzene	ND		ug/m3	2.0	1
p/m-Xylene	ND		ug/m3	4.0	1
o-Xylene	ND		ug/m3	2.0	1
Naphthalene	ND		ug/m3	2.0	1
C5-C8 Aliphatics, Adjusted	ND		ug/m3	12	1
C9-C12 Aliphatics, Adjusted	ND		ug/m3	14	1
C9-C10 Aromatics	ND		ug/m3	10	1

Project Name: UNIFIRST PROPERTY IA / VI **Lab Number:** L1004705

Project Number: 1-2114-2 **Report Date:** 04/10/10

Method Blank Analysis
Batch Quality Control

Analytical Method: 96,APH
Analytical Date: 04/08/10 14:34
Analyst: RY

Parameter	Result	Qualifier	Units	RDL
Petroleum Hydrocarbons in Air - Mansfield Lab for sample(s): 01-20 Batch: WG406612-4				
1,3-Butadiene	ND		ug/m3	2.0
Methyl tert butyl ether	ND		ug/m3	2.0
Benzene	ND		ug/m3	2.0
Toluene	ND		ug/m3	2.0
Ethylbenzene	ND		ug/m3	2.0
p/m-Xylene	ND		ug/m3	4.0
o-Xylene	ND		ug/m3	2.0
Naphthalene	ND		ug/m3	2.0
C5-C8 Aliphatics, Adjusted	ND		ug/m3	12
C9-C12 Aliphatics, Adjusted	ND		ug/m3	14
C9-C10 Aromatics	ND		ug/m3	10

Lab Control Sample Analysis
Batch Quality Control

Project Name: UNIFIRST PROPERTY IA / VI

Project Number: 1-2114-2

Lab Number: L1004705

Report Date: 04/10/10

Parameter	LCS %Recovery	Qual	LCSD %Recovery	Qual	%Recovery Limits	RPD	Qual	RPD Limits
Petroleum Hydrocarbons in Air - Mansfield Lab Associated sample(s): 01-20 Batch: WG406612-3								
1,3-Butadiene	109		-		70-130	-		
Methyl tert butyl ether	125		-		70-130	-		
Benzene	108		-		70-130	-		
Toluene	112		-		70-130	-		
Ethylbenzene	108		-		70-130	-		
p/m-Xylene	104		-		70-130	-		
o-Xylene	105		-		70-130	-		
Naphthalene	118		-		50-150	-		
C5-C8 Aliphatics, Adjusted	106		-		70-130	-		
C9-C12 Aliphatics, Adjusted	115		-		70-130	-		
C9-C10 Aromatics	89		-		70-130	-		

Project Name: UNIFIRST PROPERTY IA / VI
Project Number: 1-2114-2

Lab Number: L1004705
Report Date: 04/10/10

Sample Receipt and Container Information

Were project specific reporting limits specified? YES

Cooler Information

Cooler	Custody Seal
NA	Absent

Container Information

Container ID	Container Type	Cooler	pH	Temp deg C	Pres	Seal	Analysis
L1004705-01A	Canister - 6 Liter	NA	NA	NA	NA	Absent	APH-10(30),TO15-SIM(30)
L1004705-02A	Canister - 6 Liter	NA	NA	NA	NA	Absent	APH-10(30),TO15-SIM(30)
L1004705-03A	Canister - 6 Liter	NA	NA	NA	NA	Absent	APH-10(30),TO15-SIM(30)
L1004705-04A	Canister - 6 Liter	NA	NA	NA	NA	Absent	APH-10(30),TO15-SIM(30)
L1004705-05A	Canister - 6 Liter	NA	NA	NA	NA	Absent	APH-10(30),TO15-SIM(30)
L1004705-06A	Canister - 6 Liter	NA	NA	NA	NA	Absent	APH-10(30),TO15-SIM(30)
L1004705-07A	Canister - 6 Liter	NA	NA	NA	NA	Absent	APH-10(30),TO15-SIM(30)
L1004705-08A	Canister - 6 Liter	NA	NA	NA	NA	Absent	APH-10(30),TO15-SIM(30)
L1004705-09A	Canister - 6 Liter	NA	NA	NA	NA	Absent	APH-10(30),TO15-SIM(30)
L1004705-10A	Canister - 6 Liter	NA	NA	NA	NA	Absent	APH-10(30),TO15-SIM(30)
L1004705-11A	Canister - 6 Liter	NA	NA	NA	NA	Absent	APH-10(30),TO15-SIM(30)
L1004705-12A	Canister - 6 Liter	NA	NA	NA	NA	Absent	APH-10(30),TO15-SIM(30)
L1004705-13A	Canister - 6 Liter	NA	NA	NA	NA	Absent	APH-10(30),TO15-SIM(30)
L1004705-14A	Canister - 6 Liter	NA	NA	NA	NA	Absent	APH-10(30),TO15-SIM(30)
L1004705-15A	Canister - 6 Liter	NA	NA	NA	NA	Absent	APH-10(30),TO15-SIM(30)
L1004705-16A	Canister - 6 Liter	NA	NA	NA	NA	Absent	APH-10(30),TO15-SIM(30)
L1004705-17A	Canister - 6 Liter	NA	NA	NA	NA	Absent	APH-10(30),TO15-SIM(30)
L1004705-18A	Canister - 6 Liter	NA	NA	NA	NA	Absent	APH-10(30),TO15-SIM(30)
L1004705-19A	Canister - 6 Liter	NA	NA	NA	NA	Absent	APH-10(30),TO15-SIM(30)
L1004705-20A	Canister - 6 Liter	NA	NA	NA	NA	Absent	APH-10(30),TO15-SIM(30)

*Hold days indicated by values in parentheses

Project Name:	UNIFIRST PROPERTY IA / VI	**Lab Number:**	L1004705
Project Number:	1-2114-2	**Report Date:**	04/10/10

GLOSSARY

Acronyms

EPA	· Environmental Protection Agency.
LCS	· Laboratory Control Sample: A sample matrix, free from the analytes of interest, spiked with verified known amounts of analytes or a material containing known and verified amounts of analytes.
LCSD	· Laboratory Control Sample Duplicate: Refer to LCS.
MS	· Matrix Spike Sample: A sample prepared by adding a known mass of target analyte to a specified amount of matrix sample for which an independent estimate of target analyte concentration is available.
MSD	· Matrix Spike Sample Duplicate: Refer to MS.
NA	· Not Applicable.
NC	· Not Calculated: Term is utilized when one or more of the results utilized in the calculation are non-detect at the parameter's reporting unit.
NI	· Not Ignitable.
RDL	· Reported Detection Limit: The value at which an instrument can accurately measure an analyte at a specific concentration. The RDL includes any adjustments from dilutions, concentrations or moisture content, where applicable.
RPD	· Relative Percent Difference: The results from matrix and/or matrix spike duplicates are primarily designed to assess the precision of analytical results in a given matrix and are expressed as relative percent difference (RPD). Values which are less than five times the reporting limit for any individual parameter are evaluated by utilizing the absolute difference between the values; although the RPD value will be provided in the report.

Terms

Analytical Method: Both the document from which the method originates and the analytical reference method. (Example: EPA 8260B is shown as 1,8260B.) The codes for the reference method documents are provided in the References section of the Addendum.

Data Qualifiers

A	· Spectra identified as "Aldol Condensation Product".
B	· The analyte was detected above the reporting limit in the associated method blank. Flag only applies to associated field samples that have detectable concentrations of the analyte at less than five times (5x) the concentration found in the blank. For DOD-related projects, flag only applies to associated field samples that have detectable concentrations of the analyte at less than ten times (10x) the concentration found in the blank AND the analyte was detected above one-half the reporting limit (or above the reporting limit for common lab contaminants) in the associated method blank.
D	· Concentration of analyte was quantified from diluted analysis. Flag only applies to field samples that have detectable concentrations of the analyte.
E	· Concentration of analyte exceeds the range of the calibration curve and/or linear range of the instrument.
H	· The analysis of pH was performed beyond the regulatory-required holding time of 15 minutes from the time of sample collection.
P	· The RPD between the results for the two columns exceeds the method-specified criteria.
Q	· The quality control sample exceeds the associated acceptance criteria. Note: This flag is not applicable for matrix spike recoveries when the sample concentration is greater than 4x the spike added or for batch duplicate RPD when the sample concentrations are less than 5x the RDL. (Metals only.)
R	· Analytical results are from sample re-analysis.
RE	· Analytical results are from sample re-extraction.
J	· Estimated value. This represents an estimated concentration for Tentatively Identified Compounds (TICs).
ND	· Not detected at the reported detection limit (RDL) for the sample.

Report Format: Data Usability Report

Project Name: UNIFIRST PROPERTY IA / VI **Lab Number:** L1004705
Project Number: 1-2114-2 **Report Date:** 04/10/10

REFERENCES

48 Compendium of Methods for the Determination of Toxic Organic Compounds in Ambient Air. Second Edition. EPA/625/R-96/010b, January 1999.

96 Method for the Determination of Air-Phase Petroleum Hydrocarbons (APH), Massachusetts Department of Environmental Protection (MassDEP), December 2009, Revision 1.

LIMITATION OF LIABILITIES

Alpha Analytical performs services with reasonable care and diligence normal to the analytical testing laboratory industry. In the event of an error, the sole and exclusive responsibility of Alpha Woods Hole Labs shall be to re-perform the work at it's own expense. In no event shall Alpha Analytical be held liable for any incidental, consequential or special damages, including but not limited to, damages in any way connected with the use of, interpretation of, information or analysis provided by Alpha Woods Hole Labs.

We strongly urge our clients to comply with EPA protocol regarding sample volume, preservation, cooling, containers, sampling procedures, holding time and splitting of samples in the field.

Certificate/Approval Program Summary

Last revised December 15, 2009 – Mansfield Facility

The following list includes only those analytes/methods for which certification/approval is currently held.
For a complete listing of analytes for the referenced methods, please contact your Alpha Customer Service Representative.

Connecticut Department of Public Health Certificate/Lab ID: PH-0141.

Wastewater/Non-Potable Water (Inorganic Parameters: pH, Turbidity, Conductivity, Alkalinity, Aluminum, Antimony, Arsenic, Barium, Beryllium, Boron, Cadmium, Calcium, Chromium, Cobalt, Copper, Iron, Lead, Magnesium, Manganese, Mercury, Molybdenum, Nickel, Potassium, Selenium, Silver, Sodium, Strontium, Thallium, Tin, Vanadium, Zinc, Total Residue (Solids), Total Suspended Solids (non-filterable), Total Cyanide. Organic Parameters: PCBs, Organochlorine Pesticides, Technical Chlordane, Toxaphene, Acid Extractables, Benzidines, Phthalate Esters, Nitrosamines, Nitroaromatics & Isophorone, PAHs, Haloethers, Chlorinated Hydrocarbons, Volatile Organics.)

Solid Waste/Soil (Inorganic Parameters: pH, Aluminum, Antimony, Arsenic, Barium, Beryllium, Cadmium, Calcium, Chromium, Hexavalent Chromium, Cobalt, Copper, Iron, Lead, Magnesium, Manganese, Mercury, Molybdenum, Nickel, Potassium, Selenium, Silver, Sodium, Thallium, Vanadium, Zinc, Total Organic Carbon, Total Cyanide, Corrosivity, TCLP 1311. Organic Parameters: PCBs, Organochlorine Pesticides, Technical Chlordane, Toxaphene, Volatile Organics, Acid Extractables, Benzidines, Phthalates, Nitrosamines, Nitroaromatics & Cyclic Ketones, PAHs, Haloethers, Chlorinated Hydrocarbons.)

Florida Department of Health Certificate/Lab ID: E87814. ***NELAP Accredited.***

Non-Potable Water (Inorganic Parameters: SM2320B, EPA 120.1, SM2510B, EPA 245.1, EPA 150.1, EPA 160.2, SM2540D, EPA 335.2, SM2540G, EPA 180.1. Organic Parameters: EPA 625, 608.)

Solid & Chemical Materials (Inorganic Parameters: 6020, 7470, 7471, 9045, 9014. Organic Parameters: EPA 8260, 8270, 8082, 8081.)

Air & Emissions (EPA TO-15.)

Louisiana Department of Environmental Quality Certificate/Lab ID: 03090. ***NELAP Accredited.***

Non-Potable Water (Inorganic Parameters: EPA 120.1, 150.1, 160.2, 180.1, 200.8, 245.1, 310.1, 335.2, 608, 625, 1631, 3010, 3015, 3020, 6020, 9010, 9014, 9040, SM2320B, 2510B, 2540D, 2540G, 4500CN-E, 4500H-B, Organic Parameters: EPA 3510, 3580, 3630, 3640, 3660, 3665, 5030, 8015 (mod), 3570, 8081, 8082, 8260, 8270,)

Solid & Chemical Materials (Inorganic Parameters: 6020, 7196, 7470, 7471, 7474, 9010, 9014, 9040, 9045, 9060. Organic Parameters: EPA 8015 (mod), EPA 3570, 1311, 3050, 3051, 3060, 3580, 3630, 3640, 3660, 3665, 5035, 8081, 8082, 8260, 8270.)

Biological Tissue (Inorganic Parameters: EPA 6020. Organic Parameters: EPA 3570, 3510, 3610, 3630, 3640, 8270.)

Maine Department of Human Services Certificate/Lab ID: MA0030.

Wastewater (Inorganic Parameters: EPA 120.1, 300.0, SM 2320, 2510B, 2540C, 2540D, EPA 245.1. Organic Parameters: 608, 624.)

Massachusetts Department of Environmental Protection Certificate/Lab ID: M-MA030.

Non-Potable Water (Inorganic Parameters: SM4500H+B. Organic Parameters: EPA 624.)

New Hampshire Department of Environmental Services Certificate/Lab ID: 2206. ***NELAP Accredited.***

Non-Potable Water (Inorganic Parameters: EPA 200.8, 245.1, 1631E, 120.1, 150.1, 180.1, 310.1, 335.2, 160.2, SM2540D, 2540G, 4500CN-E, 4500H+B, 2320B, 2510B. Organic Parameters: EPA 625, 608.)

New Jersey Department of Environmental Protection Certificate/Lab ID: MA015. ***NELAP Accredited.***

Non-Potable Water (Inorganic Parameters: SW-846 1312, 3010, 3020A, 3015, 6020, SM2320B, EPA 200.8, SM2540C, 2540D, 2540G, EPA 120.1, SM2510B, EPA 180.1, 245.1, 1631E, SW-846 9040B, 6020, 9010B, 9014 Organic Parameters: EPA 608, 625, SW-846 3510C, 3580A, 5030B, 3035L, 5035H, 3630C, 3640A, 3660B, 3665A, 8081A, 8082 8260B, 8270C)

Solid & Chemical Materials (Inorganic Parameters: SW-846 6020, 9010B, 9014, 1311, 1312, 3050B, 3051, 3060A, 7196A, 7470A, 7471A, 9045C, 9060. Organic Parameters: SW-846 3580A, 5030B, 3035L, 5035H, 3630C, 3640A, 3660B, 3665A, 8081A, 8082, 8260B, 8270C, 3570, 8015B.)

Atmospheric Organic Parameters (EPA TO-15)

Biological Tissue (Inorganic Parameters: SW-846 6020 Organic Parameters: SW-846 8270C, 3510C, 3570, 3610B, 3630C, 3640A)

New York Department of Health Certificate/Lab ID: 11627. ***NELAP Accredited.***

Non-Potable Water (Inorganic Parameters: EPA 310.1, SM2320B, EPA 365.2, 160.1, EPA 160.2, SM2540D, EPA 200.8, 6020, 1631E, 245.1, 335.2, 9014, 150.1, 9040B, 120.1, SM2510B, EPA 376.2, 180.1, 9010B. Organic Parameters: EPA 624, 8260B, 8270C, 608, 8081A, 625, 8082, 3510C, 3511, 5030B.)

Solid & Hazardous Waste (Inorganic Parameters: EPA 9040B, 9045C, SW-846 Ch7 Sec 7.3, EPA 6020, 7196A, 7471A, 7474, 9014, 9040B, 9045C, 9010B. Organic Parameters: EPA 8260B, 8270C, 8081A, DRO 8015B, 8082, 1311, 3050B, 3580, 3050B, 3035, 3570, 3051, 5035, 5030B.)

Air & Emissions (EPA TO-15.)

Pennsylvania Department of Environmental Protection Certificate/Lab ID: 68-02089. ***NELAP Accredited.***

Non-Potable Water (Organic Parameters: EPA 5030B, EPA 8260)

Rhode Island Department of Health Certificate/Lab ID: LAO00299. ***NELAP Accredited via LA-DEQ.***

Refer to MA-DEP Certificate for Non-Potable Water.

Refer to LA-DEQ Certificate for Non-Potable Water.

Texas Commission of Environmental Quality Certificate/Lab ID: T104704419-08-TX. ***NELAP Accredited.***

Solid & Chemical Materials (Inorganic Parameters: EPA 6020, 7470, 7471, 1311, 7196, 9014, 9040, 9045, 9060. Organic Parameters: EPA 8015, 8270, 8260, 8081, 8082.)

U.S. Army Corps of Engineers

Department of Defense Certificate/Lab ID: L2217.01.

Non-Potable Water (Inorganic Parameters: EPA 3005A,3020, 6020, 245.1, 245.7, 1631E, 7470A, 7474, 9014, 120.1, 9050A, 180.1, SM4500H-B, 2320B, 2510B, 2540D,9040. Organic Parameters: EPA 3510C, 5030B, 9010B, 624, 8260B, 8270C, 8270 Alk-PAH, 8082, 8081A, 8015 (SHC), 8015 (DRO).)

Solid & Hazardous Waste (Inorganic Parameters: EPA 1311, 1312,3051, 6020, 747A, 7474, 9045C,9060, SM 2540G, ASTM D422-63. Organic Parameters: EPA 3580, 3570, 3540C, 5035, 8260B, 8270C, 8270 Alk-PAH, 8082, 8081A, 8015 (SHC), 8015 (DRO).

Air & Emissions (EPA TO-15.)

Analytes Not Accredited by NELAP
Certification is not available by NELAP for the following analytes: **8270C:** Biphenyl.

AIR ANALYSIS

PAGE 1 OF 2

ALPHA ANALYTICAL — *CHAIN OF CUSTODY*

320 Forbes Blvd, Mansfield, MA 02048
TEL: 508-822-9300 FAX: 508-822-3288

Date Rec'd in Lab:

ALPHA Job #: 1004705

Client Information

Client: Johnson Co.
Address:
Phone:
Fax:
Email:
☐ These samples have been previously analyzed by Alpha

Project Information

Project Name: Unisirsd/wells G&H
Project Location:
Project #:
Project Manager: Bob Osborne
ALPHA Quote #:

Turn-Around Time

☐ Standard ☐ RUSH (only confirmed if pre-approved!)

Date Due: Time:

Report Information - Data Deliverables

☐ FAX
☐ ADEx
Criteria Checker:
(Default based on Regulatory Criteria Indicated)
Other Formats:
☐ EMAIL (standard pdf report)
☐ Additional Deliverables:
Report to: (if different than Project Manager)

Billing Information

☐ Same as Client info PO #:

Regulatory Requirements/Report Limits

State/Fed	Program	Criteria

Other Project Specific Requirements/Comments:

All Columns Below Must Be Filled Out

ALPHA Lab ID (Lab Use Only)	Sample ID	Collection Date	Start Time	End Time	Initial Vacuum	Final Vacuum	Sample Matrix*	Sampler's Initials	Can Size	I D Can	I D - Flow Controller	TO-14A by TO-15	TO-15	TO-15 SIM	APH	FIXED GASES	TO-13A	TO-4 / TO-10	Sample Comments (i.e. PID)
1004705-01	Can 652 FC 466	4/1/10					SV							✓	✓				
-02	Can 998 FC 045	↓					↓							↓	↓				
-03	Can 1706 FC 291	↓					↓							↓	↓				
-04	Can 1692 FC 368	↓					↓							↓	↓				
-05	Can 965 FC 367	↓					↓							↓	↓				
-06	Can 587 FC 465	↓					↓							↓	↓				
-07	Can 956 FC 019	↓					↓							↓	↓				
-08	Can 1520 FC 463	↓					↓							↓	↓				
-09	Can 764 FC 257	↓					↓							↓	↓				
-10	Can 1053 FC 269	↓					↓							↓	↓				

*SAMPLE MATRIX CODES
AA = Ambient Air (Indoor/Outdoor)
SV = Soil Vapor/Landfill Gas/SVE
Other = Please Specify

Container Type

Relinquished By:	Date/Time	Received By:	Date/Time:
[illegible]	4/1/10		

Please print clearly, legibly and completely. Samples can not be logged in and turnaround time clock will not start until any ambiguities are resolved. All samples submitted are subject to Alpha's Terms and Conditions. See reverse side.

Form No: 101-02 (19-Jun-09)

04291023:12

AIR ANALYSIS

PAGE 2 OF 2

ALPHA ANALYTICAL — *CHAIN OF CUSTODY*

320 Forbes Blvd, Mansfield, MA 02048
TEL: 508-822-9300 FAX: 508-822-3288

Date Rec'd in Lab:

ALPHA Job #: L1004705

Client Information

Client: Johnson Co.
Address:
Phone:
Fax:
Email:
☐ These samples have been previously analyzed by Alpha

Project Information

Project Name: Unisrsd / Wells G&H
Project Location:
Project #:
Project Manager: Bob Osborne
ALPHA Quote #:

Turn-Around Time

☐ Standard ☐ RUSH (only confirmed if pre-approved!)
Date Due: Time:

Report Information - Data Deliverables

☐ FAX
☐ ADEx
Criteria Checker:
(Default based on Regulatory Criteria Indicated)
Other Formats:
☐ EMAIL (standard pdf report)
☐ Additional Deliverables:
Report to: (if different than Project Manager)

Billing Information

☐ Same as Client info PO #:

Regulatory Requirements/Report Limits

State/Fed	Program	Criteria

Other Project Specific Requirements/Comments:

All Columns Below Must Be Filled Out

ALPHA Lab ID (Lab Use Only)	Sample ID	Collection Date	Start Time	End Time	Initial Vacuum	Final Vacuum	Sample Matrix*	Sampler's Initials	Can Size	I D Can	I D - Flow Controller	TO-14A by TO-15	TO-15	TO-15 SIM	APH	FIXED GASES	TO-13A	TO-4 / TO-10	Sample Comments (i.e. PID)
L1004705-11	Can 1633 FC 208	4/1/10					SU							X	X				
-12	Can 1655 FC 275	↓					↓							↓	↓				
-13	Can 969 FC 158																		
-14	Can 696 FC 303																		
-15	Can 1562 FC 166																		
-16	Can 1576 FC 343																		
-17	Can 932 FC 332																		
-18	Can 1646 FC 090																		
-19	Can 963 FC 451																		
-20	Can 1556 FC 390																		

*SAMPLE MATRIX CODES
AA = Ambient Air (Indoor/Outdoor)
SV = Soil Vapor/Landfill Gas/SVE
Other = Please Specify

Container Type

Relinquished By:	Date/Time	Received By:	Date/Time:
[signature]	4/1/10		

Please print clearly, legibly and completely. Samples can not be logged in and turnaround time clock will not start until any ambiguities are resolved. All samples submitted are subject to Alpha's Terms and Conditions. See reverse side.

Form No: 101-02 (19-Jun-09)

04291023:12

APPENDIX D

LABORATORY ANALYTICAL DATA VALIDATION REPORT

Phoenix Chemistry Services

June 15, 2010

Bettina Longino
The Johnson Company
100 State St., Suite 600
Montpelier, VT 05602

Reference #: 2010-0429-001

Dear Bettina,

Enclosed please find the revision of the data validation report for Sample Delivery Group No. L1005229 from the Indoor Air Quality/Vapor Intrusion (IAQ/VI) assessment work at the UniFirst Property, in Woburn, MA.

The result for tetrachloroethene in sample OA-02 was inadvertently not qualified as less than the reported value (U) during the original validation. Attached please find the revised complete report, including the revised Form 1 for the TO-15 SIM analysis for this sample, the revised electronic deliverable, and the revised report text. Please replace the entire report, the affected Form 1, and either the affected records of the electronic deliverable or the entire file in your files and printed copies.

If there are any questions or concerns about the material in this report, please do not hesitate to contact me for help and clarification.

Sincerely,

Deborah H. Gaynor, Ph.D.
Principal, Phoenix Chemistry Services

Phoenix Chemistry Services | 126 Covered Bridge Road | North Ferrisburg | Vermont | 05473
Telephone: (802) 233-2473 | Website: www.phoenixchemistryservices.com | Email: dgaynor@phoenixchemistryservices.com

Phoenix Chemistry Services

June 14, 2010

Bettina Longinol
The Johnson Company
100 State St., Suite 600
Montpelier, VT 05602

Reference #: 2010-0429-001

Dear Bettina,

Enclosed please find the results of the data validation of Sample Delivery Group No. L1005229 from the Indoor Air Quality/Vapor Intrusion (IAQ/VI) assessment work at the UniFirst Property, in Woburn, MA. The ambient air and sub-slab vapor samples in SDG No. L100229 were collected overnight on April 11 through 12, 2010. The laboratory analyses were performed by Alpha Analytical Laboratories, Inc. of Marshfield, MA.

The data package was received on April 29, 2010, with a forms revision received on June 4, 2010, and an electronic deliverable revision received on June 10, 2010. The validation has been performed by Phoenix Chemistry Services according to the Tier III guidelines as defined by USEPA Region I, as presented in "Region I EPA-NE Data Validation Functional Guidelines for Evaluating Environmental Analyses", December, 1996. The EPA's National Functional Guidelines for Organic Data Review (EPA 540/R-99/008, October, 1999), the Massachusetts Air-Phase Hydrocarbons (APH) Method, and the IAQ/VI Quality Assurance Project Plan (QAPP) were also considered during the evaluation, and professional judgment was applied as necessary and appropriate. Data qualifiers have been applied in the final validation report as necessary and appropriate, in accordance with these guidelines.

Thank you for this opportunity to provide data validation services to The Johnson Company. We look forward to continuing to work with you on this and other projects. If there are any questions or concerns about the material in this report, please do not hesitate to contact me for help and clarification.

Sincerely,

Deborah H. Gaynor, Ph.D.
Principal, Phoenix Chemistry Services

Phoenix Chemistry Services | 126 Covered Bridge Road | North Ferrisburg | Vermont | 05473
Telephone: (802) 233-2473 | Website: www.phoenixchemistryservices.com | Email: dgaynor@phoenixchemistryservices.com

DATA VALIDATION

FOR

UniFirst-Woburn Vapor Intrusion Assessment
UniFirst Property
Woburn, MA

ORGANIC ANALYSIS DATA
Selected Volatiles and Petroleum Hydrocarbons in Air Samples

Sample Delivery Group (SDG) No.
L1005229

Chemical Analyses Performed by:

Alpha Analytical Laboratories, Inc.
320 Forbes Blvd.
Marshfield, MA 02048

FOR

The Johnson Company
100 State Street, Suite 600
Montpelier, VT 05602

Data Validation Report by:

Phoenix Chemistry Services
126 Covered Bridge Rd.
N. Ferrisburg, VT 05473
(802) 233-2473
June 14, 2010
revised June 15, 2010

Reference #2010-0429-001
VOA Air Validation Report/L1005229/dhg

EXECUTIVE SUMMARY

Phoenix Chemistry Services (Phoenix) has completed the validation of the method TO-15 Selected Ion Monitoring (SIM) and Air-Phase Petroleum Hydrocarbons (APH) volatiles in air analysis data prepared by Alpha Analytical Laboratories of Marshfield, MA, for 40 air samples and one (1) trip blank (TB) from the UniFirst Property in Woburn, MA. The laboratory reported the data under Sample Delivery Group (SDG) No. L1005229, which was submitted as a single data package received by Phoenix on April 29, 2010, and a revision received on June 4, 2010, and includes the following samples:

Sample ID	Laboratory ID
IA-12	L1005229-01
IA-04	L1005229-02
IA-14	L1005229-03
OA-03	L1005229-04
IA-10A	L1005229-05
IA-11	L1005229-06
IA-DUP02	L1005229-07
IA-09	L1005229-08
IA-08	L1005229-09
IA-05	L1005229-10
OA-01	L1005229-11
SV-07	L1005229-12
IA-13	L1005229-13
OA-02	L1005229-14
IA-DUP01	L1005229-15
IA-06	L1005229-16
OA-DUP1	L1005229-17
IA-15	L1005229-18
IA-01	L1005229-19
IA-13A	L1005229-20
IA-10	L1005229-21
IA-03	L1005229-22
IA-07	L1005229-23
IA-02	L1005229-24
SV-04	L1005229-25
SV-14	L1005229-26
SV-DUP01	L1005229-27
SV-13	L1005229-28
SV-03	L1005229-29
SV-15	L1005229-30
SV-12	L1005229-31
SV-05	L1005229-32
SV-10	L1005229-33
SV-DUP02	L1005229-34

Sample ID	Laboratory ID
SV-09	L1005229-35
SV-01	L1005229-36
SV-08	L1005229-37
TRIP BLANK	L1005229-38
SV-06	L1005229-39
SV-02	L1005229-40
SV-11	L1005229-41

A cross-reference table of sample IDs was provided in the data package. Two separate data packages, L1004705 and L1004721 were submitted on April 22 and 29, 2010, respectively, containing the supporting documentation (clean can certification) for the preparation and analysis of the sampling canisters.

The samples in this data set represent the overnight sample collection from April 11 to 12, 2010 in Woburn, MA inside and outside the UniFirst on-Property building and the sub-slab soil vapor samples matched to the indoor sampling locations. One sample canister (ID #0695, sample IA-01) was noted at the end of sample collection as having insufficient vacuum remaining (at -0.6 inches Hg) according to the field sampler's digital gauge, and the vacuum was determined by the laboratory to be +0.5 inches Hg. All samples were hand-delivered to the laboratory on the same day as collection. Because the vacuum change was closely monitored during sample collection, and the excessively rapid filling of the canister was under observation, sample integrity was deemed acceptable; re-sampling was not required, and the laboratory was instructed to proceed with analysis.

Findings of the validation effort resulted in the following qualifications of sample results.

- Results for trans-1,3-dichloropropene in samples analyzed by Method TO-15 SIM, as shown in Table 2, in the analytical windows between 15:57 on 4/21/10 and 11:44 on 4/23/10 were qualified as estimated (UJ).

- Positive results in the APH analysis for C9 – C12 aliphatic hydrocarbons greater than the sample-specific (adjusted) quantitation limit (QL) but less than the action limit in samples IA-13, IA-13A, SV-14, and SV-03 were qualified as less than the reported value (U).

- Positive results for tetrachloroethene in the TO-15 SIM analysis greater than the sample-specific (adjusted) QL but less than the action limit in samples OA-01, OA-02, OA-03, and OA-DUP01 were qualified as less than the reported value (U).

- Results in the TO-15 SIM analysis for total xylenes in IA-13 and IA-DUP01 were qualified as estimated (J).

- Results for tetrachloroethene in SV-07, SV-14, SV-DUP01, SV-13, SV-15, SV-12, SV-05, SV-10, SV-DUP02, SV-09, SV-08, SV-06, and SV-11 were rejected (R) and replaced with the acceptable concentrations from the more diluted analyses of these samples (SV-07DL, SV-14DL, SV-DUP01DL, SV-13DL, SV-15DL, SV-12DL, SV-05DL, SV-10DL, SV-DUP02DL, SV-09DL, SV-08DL, SV-06DL, and SV-11DL).

The Overall Evaluation of Data (Section XVI) summarizes the validation results. The validation findings and conclusions for each analytical parameter are detailed in the remaining sections of this report.

Documentation problems observed in the data package are described in Section XVII.

This validation report shall be considered part of the data package for all future distributions of TO - 15 SIM and APH (volatiles and petroleum hydrocarbons in air) analysis data for SDG No. L1005229.

INTRODUCTION

Phoenix Chemistry Services (Phoenix) conducted a validation of the method TO-15 Selected Ion Monitoring (SIM) and Air-Phase Petroleum Hydrocarbons (APH) volatiles in air analysis data prepared by Alpha Analytical Laboratories of Marshfield, MA, for 40 air samples and one (1) trip blank from the UniFirst Property in Woburn, MA.

Analyses of selected volatiles in air samples were performed according to Method TO-15, as modified for Selected Ion Monitoring (SIM) in the laboratory standard operating procedure (SOP) No. A-001, and for air-phase petroleum hydrocarbons according to SOP No. A-003 and the Massachusetts Method for the Determination of Air-Phase Petroleum Hydrocarbons (APH), Massachusetts Department of Environmental Protection, December, 2009, Final, Revision 1, and in accordance with requirements in the Quality Assurance Project Plan (QAPP) for Indoor Air Quality and Vapor Intrusion Assessment, Rev. 1, March, 2010. The target compound list was limited to the compounds listed in Form K of the QAPP. Additional compounds were reported for the APH method, as needed for calculation of the three hydrocarbon ranges required by the QAPP. In instances where the same single analyte is reported by both methods, only the TO-15 SIM analysis for that single analyte is used for vapor intrusion assessment.

The laboratory performs the TO-15 SIM and the APH instrument calibrations on a single instrument using different calibration standards. A single injection is performed for each sample, and the resulting analytical signal is processed independently to fulfill the methodological requirements of the TO-15 SIM and the APH methods. Target reporting limits for all analytes and hydrocarbon ranges are specified in Form K of the QAPP.

Tentative identification of non-target analyte peaks (i.e., tentatively identified compounds, or TICs) was not requested for these analyses.

Phoenix's validation was performed in conformance with Tier III guidelines as defined by USEPA Region I. Data qualifiers are applied as necessary and appropriate. To the extent possible, the data were evaluated in accordance with the “Region I EPA-NE Data Validation Functional Guidelines for Evaluating Environmental Analyses”, December, 1996. EPA’s National Functional Guidelines for Organic Data Review (EPA 540/R-94/012, 2/94) and the QAPP were also considered during the evaluation, and professional judgment was applied as necessary and appropriate.

The data validation process evaluates data on a technical basis for chemical analyses conducted under the USEPA Contract Laboratory Program (CLP) or other well-defined methods. Contract compliance is evaluated only in specific situations. Issues pertaining to contractual compliance are noted where applicable. It is assumed that the data package is presented in accordance with the CLP requirements. It is also assumed that the data package represents the best efforts of the laboratory and has already been subjected to adequate and sufficient quality review prior to submission for validation.

Results of sample analyses are reported by the laboratory as either qualified or unqualified; various qualifier codes are used by the laboratory to denote specific information regarding the analytical results. During the validation process, laboratory data are verified against all available supporting documentation. Based on this evaluation, qualifier codes may be added, deleted or modified by the data validator. Raw data is examined in detail to check calculations, compound identification, and/or transcription errors. Validated

results are either qualified or unqualified; if results are unqualified, this means that the reported values may be used without reservation. Final validated results are annotated with the following codes, as defined in the EPA Region I Functional Guidelines:

U - The analyte was analyzed for, but was not detected. The associated numerical value is the sample quantitation limit. The sample quantitation limit accounts for sample specific dilution factors and percent solids corrections or sample sizes that deviate from those required by the method.

J - The associated numerical value is an estimated quantity.

UJ - The analyte was analyzed for, but was not detected. The sample quantitation limit is an estimated quantity.

R - The data are unusable (analyte may or may not be present). Resampling and reanalysis is necessary for verification. The R replaces the numerical value or sample quantitation limit. In some instances (e.g., a dilution) a result may be indicated as "rejected" to avoid confusion when a more quantitatively accurate result is available.

EB, TB, BB - An analyte that was identified in an aqueous equipment (field) blank, trip blank, or bottle blank that was used to assess field contamination associated with soil/sediment samples. These qualifiers are to be applied to soil/sediment sample results only.

These codes are assigned during the validation process and are based on the data review of the results. They are recorded on the Data Summary Forms contained in Attachment A and the Organic Analysis Data Sheets (Form I) in Attachment B of this validation report.

All data users should note two facts. First, **the "R" qualifier means that the laboratory-reported value is completely unusable.** The analysis is invalid due to significant quality control problems, and provides no information as to whether the compound is present or not. Rejected values should not appear on data tables because they have no useful purpose under any circumstances. Second, **no analyte concentration is guaranteed to be accurate even if all associated quality control is acceptable.** While strict quality control conformance provides well-defined confidence in the reported results, any analytical result will always contain some error.

The user is also cautioned that the validation effort is based on the materials provided by the laboratory. Software manipulation, resulting in misleading raw data printouts, cannot be routinely detected during validation; unless otherwise stated in the report, these kinds of issues are outside the scope of this review.

Detailed Findings of Measurement Error Associated with the Analytical Analysis

I. Sample Integrity

The air samples for TO-15 and APH analysis were collected overnight on April 11 and 12, 2010 at the UniFirst Property in Woburn, MA. All analyses were performed within thirteen (13) days after sample collection, which is within the 30 day holding time defined in Method TO-15 and MA APH.

The canisters were delivered by laboratory courier to the UniFirst Property on the day of sample collection, and the canisters were hand-delivered to the laboratory on the same day as collection ended. Two separate data packages, L1004705 and L1004721, were submitted on April 22 and 29, 2010, respectively, containing the supporting documentation (clean can certification) for the preparation and analysis of the sampling canisters. All canisters submitted to the field for use met all applicable method requirements.

The Chain of Custody (COC) and the Canister and Flow Controller Information records show that the sample canisters were collected and transported according to method specifications, with the following exceptions:

Table 1. Sampling Equipment Exceedances

Sample ID	Flow Controller ID	Rate on release (mL/min)	Rate on return (mL/min)	Change	Final Vacuum* (inches Hg)	Sampling Duration
IA-04	0074	10	11.4	+13 %	-2.1	8 hr 00 min
IA-09	0379	10	11.9	+ 17 %	-4.2	6 hr 41 min
IA-08	0081	10	11.4	+ 13 %	-5.0	6 hr 48 min
IA-01	0290	10	24.4	+ 84 %	+0.5	6 hr 04 min

*as measured at the laboratory following sample receipt; field measurements showed slightly greater vacuum.

The client was contacted immediately following sample receipt and informed of the flow controller rate exceedances, and these were also properly noted in the Case Narrative. Canister vacuum status was monitored by field engineers during sample collection by use of a newly calibrated NIST-traceable digital vacuum gauge. Sample collection was stopped for samples IA-04, IA-09, and IA-08 while sufficient residual vacuum remained in the canisters. Sample collection was stopped early for sample IA-01 as it reached ambient conditions (-0.6 in Hg as measured in the field). Although sample IA-01 does not present a full 8-hour sample, the canister was checked five hours and 40 minutes after sampling was begun, and still had an acceptable vacuum (-4.5 in Hg). The canister valve was closed 33 minutes after the vacuum check, and rechecked at that time. Sample integrity was deemed acceptable for all samples, and the laboratory was told to proceed with analysis.

II. GC/MS Instrument Performance Check (Tuning)

The samples for volatiles and petroleum hydrocarbons in air analyses from SDG No. L1005229 were analyzed on a single GC/MS system identified as instrument Airpiano2. The tuning of this instrument was demonstrated with analysis of 4-bromofluorobenzene (BFB); tunes were analyzed for each 24-hour period during which the samples or associated standards were analyzed. All seven (7) BFB tunes were correctly

calculated, within acceptance limits, and are reported accurately on the Form 5 summaries in the data package.

III. Initial Calibration (IC)

One IC (4/17/10, 12:19 – 19:18) was performed on instrument Airpiano2 in support of the TO-15 SIM sample analyses, and one IC (4/17/10, 21:14 – 4/18/10, 02:17) was performed on instrument Airpiano2 in support of the APH sample analyses. The TO-15 SIM IC was performed at eleven concentration levels (0.02, 0.04, 0.1, 0.2, 0.5, 1.0, 2.5, 5.0, 10, 20, and 50 part per billion by volume [ppbv]). Documentation of all individual IC standards was present in the data package and relative response factor (RRF) as well as percent relative standard deviation (%RSD) values were correctly calculated and accurately reported on the Form 6 summary. The APH IC was performed at seven concentration levels (0.4, 4.0, 10, 20, 50, 80, and 100 ppbv). Documentation of all individual IC standards was present in the data package, including retention time markers, and RRF and %RSD values for individual analytes and hydrocarbon ranges, properly adjusted for internal standard and surrogate areas, were correctly calculated and accurately reported on the Form 6 and associated summaries within the data package. The MADEP MCP Response Action Analytical Report Certification was present and completely accurately, and there were no non-conformances.

Manual integrations for some target analytes, internal standards, and surrogate standards were performed in some standards and samples in this data set. The before and after ion chromatograms, the reason for the manual integration, and the analyst's initials and date were printed for each manual integration.

An Independent Calibration Verification (ICV) sample analysis at 10 ppbv for the APH method was analyzed shortly after the IC; five of the aliphatic compounds were not present in the ICV. The first TO-15 SIM continuing calibration standard was also reported as an ICV; all target analytes were present at 5.0 ppbv. All spiked analytes were recovered within 70 – 130 % recovery of expected values in both ICV analyses.

All average RRF values were above the 0.05 minimum criterion, and all %RSDs were below the maximum limit (30%) specified by Region I for both methods. However, in order to achieve an acceptable %RSD for naphthalene in the TO-15 SIM analysis, it was necessary to drop the two lowest concentration levels of the IC. Therefore, the reporting limit (RL), or quantitation limit (QL), for naphthalene was set at 0.1 ppbv (0.52 micrograms per cubic meter [ug/m^3]).

IV. Continuing Calibration (CC)

Three continuing calibration (CC) standards were run in support of the APH sample analyses, and five CC standards were run in support of the TO-15 SIM sample analyses reported in this data package. Documentation of the CC standards was present and RRF as well as percent difference (%D) values were reported on the Form 7 summaries within the data package; hydrocarbon range area sums and retention times were also reported. Sample results were reported using the average RRF of the calibration curve for quantitation. All RRF values were above the 0.05 minimum criterion, and all %D results were below the maximum limit of 30% specified by the QAPP and the MA APH method, and below the 25 % limit specified by Region 1, with the following exceptions:

Table 2. Continuing Calibration (CC) Standard Exceedances

Method	CC Date & Time	Analyte	%D	Associated Samples	
TO-15 SIM	4/20/10 20:23	benzene	25.7	IA-12	OA-01
		trans-1,3-dichloropropene	27.5	IA-04	IA-13
		naphthalene	29.1	IA-14	OA-02
				OA-03	IA-06
				IA-10A	OA-DUP01
				IA-11	IA-15
				IA-DUP02	IA-01
				IA-09	IA-13A
				IA-08	IA-10
				IA-05	IA-DUP01
APH	4/21/10 15:57	methyl-tert-butyl ether (MTBE)	27.7	IA-03	SV-03
TO-15 SIM	4/21/10 17:26	**trans-1,3-dichloropropene**	**34.9**	IA-07	SV-02
				IA-02	SV-14
				TRIP BLANK	SV-14DL*
				SV-01	SV-08
				SV-04	SV-08DL*
APH	4/22/10 14:29	methyl-tert-butyl ether (MTBE)	25.9	SV-DUP02**	SV-06**
TO-15 SIM	4/22/10 16:53	benzene	27.0	SV-12	SV-15
		trans-1,3-dichloropropene	**31.8**	SV-11	SV-13
		naphthalene	29.9	SV-09	SV-DUP01
				SV-10	SV-07
				SV-05	

* analyzed by TO-15 SIM for tetrachloroethene only (no qualifications applied to this analysis).

** reported for APH method only from this analytical window; TO-15 SIM analysis run subsequently (no qualifications applied to this analysis).

On the basis of acceptance criteria presented in the QAPP, no qualifications were applied to any sample results for %D values in the associated CC standard below 30 %D, but above the Region 1 criterion of 25 %D. On the basis of %D values in the associated CC standard above the 30 %D limit specified in the QAPP, results for trans-1,3-dichloropropene in samples analyzed by Method TO-15 SIM, as shown in Table 1, in the analytical windows between 15:57 on 4/21/10 and 11:44 on 4/23/10 were qualified as estimated (UJ).

It should be noted that a positive % D value (the CC response factor is <u>less than</u> the IC response factor) will result in a low bias for positive detects, and a negative % D will result in a high bias for positive detects.

V. Blanks

Results for three air-matrix laboratory method blanks (MBs) were reported in association with the APH sample analyses, and results for five air-matrix MBs were reported in association with the TO-15 SIM

sample analyses. No target compounds were found in any MB, with the single exception of the MB identified as WG409385-9Blank, in which 1.13 ug/m^3 tetrachloroethene (action limit 5.65 ug/m^3) was detected.

One trip blank (TB), which was used as a field blank, was reported in this data package. No target compounds were found in the TB, with the exception that 14 ug/m^3 C9 – C12 aliphatic hydrocarbons was reported in the APH analysis, and 0.732 ug/m^3 tetrachloroethene was reported in the TO-15 SIM analysis.

Since results for tetrachloroethene in samples associated with the MB WG509385-9Blank were all greater than the action limit, no qualifications were required on the basis of laboratory contamination.

Neither a trip blank nor a field blank is required for either Method TO-15 or the MA APH method, and there are no established guidelines for qualification on the basis of an air matrix trip blank or field blank. On the basis of professional judgment, an action limit of twice the detected concentration in the TB was used for qualification based on field contamination.

On the basis of field contamination, positive results for C9 – C12 aliphatic hydrocarbons greater than the sample-specific (adjusted) quantitation limit (QL) but less than the action limit in samples IA-13, IA-13A, SV-14, and SV-03 were qualified as less than the reported value (U). On the basis of field contamination, positive results for tetrachloroethene greater than the sample-specific (adjusted) QL but less than the action limit in samples OA-01, OA-02, OA-03, and OA-DUP01 were qualified as less than the reported value (U).

VI. Surrogate Compounds

No surrogate compounds are used in these methods.

VII. Internal Standards (IS)

All IS areas and retention times (RT) were within the established QC limits for all reported sample analyses in this data package.

VIII. Laboratory Duplicates

A matrix spike/matrix spike duplicate (MS/MSD) analysis is not used in either method. A laboratory duplicate analysis of a field sample (matrix duplicate) analysis is required once every 24 hours for the APH method, and a matrix duplicate analysis was also reported for the TO-15 SIM analyses. Duplicate analyses were performed for both method for samples IA-06, SV-04, and SV-15.

Precision in the APH analyses was acceptable (less than 30 % relative percent difference, RPD, for both analytes greater than five times the reporting limit) for all matrix duplicate analyses, with the exception of C9 – C12 aliphatic hydrocarbons in sample IA-06, which exhibited a 37 %RPD. However, the concentration of C9 – C12 aliphatic hydrocarbons in this sample was less than five times the RL, so no reanalysis was required or performed, and no qualifications are necessary on the basis of the slightly elevated RPD in this duplicate set. Precision in the TO-15 SIM analysis was also acceptable (range: 1 – 14 %RPD).

The dilution analysis for tetrachloroethene only in sample SV-15DL was also performed in duplicate; precision was 3 %RPD for tetrachloroethene.

IX. Field Duplicates

The following samples were identified as field duplicate pairs:

Table 3. Field Duplicate Identifications

Sample	Field Duplicate
IA-13	IA-DUP01
IA-11	IA-DUP02
SV-13	SV-DUP01
SV-11	SV-DUP02
OA-02	OA-DUP01

Relative percent difference (RPD) values for compounds detected at greater than five times the quantitation limit in at least one member of a field duplicate pair must be less than 25 %RPD as per the QAPP. The paired values for tetrachloroethene in all field duplicate pairs were acceptable, with the exception that total xylenes exhibited poor precision (49.0 %RPD) in the field duplicate pair IA-13 and IA-DUP01.

On the basis of the unacceptable precision in the field duplicate pair, results for total xylenes in IA-13 and IA-DUP01 were qualified as estimated (J).

X. Sensitivity Check

An MDL study for the TO-15 SIM method was analyzed by the laboratory on May 7, 2009. All target analytes in the statistical study had calculated MDLs below the method QLs, and demonstrated acceptable ratios (at least 3:1) of the QL to the MDL. The QL is also supported by the low concentration standard (at 0.010 ppbv) in the initial calibration, with the exception of naphthalene, which exhibited linearity only between 0.10 ppbv and 50 ppbv in the initial calibration.

Project objectives required a low reporting limit (RL) for naphthalene, and the laboratory had previously agreed to report this compound to one-half the reporting limit, and apply a “J” qualifier flag to indicate that this was an estimated concentration. Therefore, naphthalene was reported quantitatively to a RL of 0.1 ppbv, and was estimated at concentrations below 0.10 ppbv down to 0.05 ppbv (0.26 ug/m^3).

To achieve project objectives for detection limits, the analytes 1,2-dibromoethane (EDB) and bromodichloromethane were also evaluated by the laboratory down to one-half the RL, and concentrations between one-half the RL and the RL were reported with a “J” qualifier on the Alpha Analytical Report.

An MDL study is not required by the MA APH method, and was not performed. All reporting limits for this method are supported by the low standard of the initial calibration. On the basis of method acceptability, all results for the APH method (detects and non-detects) not qualified for other reasons are deemed acceptable as reported.

On the basis of acceptable sensitivity and accuracy, as demonstrated by the MDL study and supported by the initial calibration, all results for the TO-15 SIM method (detects and non-detects) not qualified for other reasons are deemed acceptable as reported.

XI. Performance Evaluation Samples (PES)/Accuracy Check

Three zero blind PE samples (commonly known as a laboratory control sample, LCS) were prepared and analyzed by the laboratory in support of the APH sample analyses, and five LCS samples were prepared and analyzed in support of the TO-15 sample analyses. All target analytes were spiked into the QC samples at 10 ppbv (but reported in ug/m^3) for the APH method, and were spiked at 5 ppbv for the TO-15 SIM method. Percent recoveries (%R) were correctly calculated for the spiked compounds, accurately reported on the Form 3 summaries in the data package, and were within the laboratory established QC limits (70 - 130 %R; naphthalene 50 – 150 %R in the APH method) for all target analytes. No spiked duplicate analyses were performed for either method, so laboratory precision was not evaluated using spiked analyses.

No external single-blind PES sample for either method was required or submitted with the samples in this data set.

XII. Target Compound Identification

Reported target compounds were correctly identified for all samples in this data set.

XIII. Compound Quantitation and Reported Quantitation Limits

Target compound quantitation and practical quantitation limits (PQLs) were accurately reported on the Form 1 summaries, with the exception that the CLP-like Form 1s and the Alpha Analytical Reports, and the electronic deliverable did not exhibit consistent reporting for toluene in three samples and for cis-1,2-dichloroethene in one sample. At the validator's request, the laboratory investigated these anomalies and determined that incorrect MDL values had been used in the laboratory's Laboratory Information System (LIMS) system. Revisions for the Form 1s were submitted on June 4, 2010, and are included in Attachment C. The four original CLP-like Form 1s for samples IA-10, SV-DUP01, SV-DUP02, and SV-06 for the TO-15 SIM method should be discarded and replaced with the revised forms.

Results below the RL are not reported by the laboratory for either method. However, at the client's request, results for naphthalene, bromodichloromethane, and 1,2-dibromoethane (EDB) were evaluated down to one-half the RL, and reported with a "J" qualifier by the laboratory on the CLP-like Form 1s. The validator has transcribed these qualifiers to the Alpha Analytical Reports, which are submitted as the validated Form 1s for this project.

Two compounds were reported with reporting limits slightly higher than specified in the QAPP. Total xylenes were reported with a quantitation limit of 0.260 ug/m^3, and benzene was reported with a target quantitation limit of 0.319 ug/m^3. No qualifications were deemed necessary on the basis of the RLs slightly above those specified in the QAPP for total xylenes and benzene.

On the basis of screen results, original dilutions were performed for both methods (simultaneous analysis) for most sub-slab samples for tetrachloroethene concentration above the TO-15 SIM linear calibrated range of the instrument. No dilution was required for any indoor or outdoor air samples, or for sub-slab samples SV-01, SV-03, and SV-04. Due to limited sample volume, an initial dilution was performed for SV-02 and SV-DUP02; no further dilution was required for SV-02.

Tetrachloroethene was detected in samples SV-07, SV-14, SV-DUP01, SV-13, SV-15, SV-12, SV-05, SV-10, SV-DUP02, SV-09, SV-08, SV-06, and SV-11 above the calibration range for the TO-15 SIM analysis. The samples were appropriately reanalyzed at a dilution, bringing the concentration of tetrachloroethene within the upper half of the calibration range, and both sets of analyses were reported in the data package. Only the tetrachloroethene results were reported for the more diluted sample analyses.

Results for tetrachloroethene in SV-07, SV-14, SV-DUP01, SV-13, SV-15, SV-12, SV-05, SV-10, SV-DUP02, SV-09, SV-08, SV-06, and SV-11 were rejected (R) due to detection of this compound outside the linear range of the instrument for method TO-15 SIM. Results for this compound were replaced with the acceptable concentrations from the more diluted analyses of these samples (SV-07DL, SV-14DL, SV-DUP01DL, SV-13DL, SV-15DL, SV-12DL, SV-05DL, SV-10DL, SV-DUP02DL, SV-09DL, SV-08DL, SV-06DL, and SV-11DL).

"E" qualifiers were appropriately applied by the laboratory to sample Form 1 results when concentrations of target analytes were greater than the instrument calibration range. Only the analyte above the calibration range was reported in the dilution analyses. The validator removed all laboratory-applied "E" qualifiers. "D" qualifiers were not applied to the results in the dilution analyses, nor was the sample ID given the "DL" suffix as required in standard CLP reporting; the validator added the "DL" suffix to distinguish the diluted sample analyses on the Form 1s. The data user should note that the "DL" suffix has not been applied to the Sample ID in the electronic deliverable. An "X" has been drawn across the entire Form I for the diluted analyses noted above.

The laboratory appropriately applied "J" qualifiers to the CLP-like sample Form 1s when the concentration of an analyte was less than the sample-specific QL for the analytes naphthalene, 1,2-dibromoethane, and bromodichloromethane in the TO-15 SIM analysis. The validator did not remove these qualifiers, and transcribed them to the Alpha Analytical Reports during the validation process.

The values that the validator has judged to be acceptable are presented on the electronic deliverable (Attachment A) and on the Alpha Analytical Reports (Form 1s) in Attachment B. Qualifiers applied by the validator during the validation effort have been added to the electronic spreadsheet in a column labeled "Validator Qualifier". Sample-specific quantitation limits may be found on the Alpha Analytical Report for each sample (Attachment B) or in the electronic deliverable (Attachment A, column "LIMIT1").

Two sets of Form 1s were submitted in the data package: one set is the Alpha Analytical Reports, which are submitted as the validated Form 1s for this project since they present results in units of ug/m^3 as well as in ppbv; the other set is CLP-like, but reports results for the TO-15 SIM analyses in units of ppbv only. Results are also presented in both units in the electronic data deliverable (EDD). Both sets of forms and the EDD were examined during the data validation process.

All positive results are listed on the electronic data deliverable, whether or not the value or qualifier was changed as a result of the validation. Where no result is listed, the compound was not detected and the

reporting limit was not qualified. If the reported result was changed during the validation effort from a positive result to a value representing a concentration not detected at or below, that value is reported as the Result with a Validator Qualifier of "U" or "UJ".

XIV. Tentatively Identified Compounds (TICs)

Evaluation of unidentified, non-target analyte peaks was not requested or performed for these samples.

XV. System Performance

The analytical system appears to have been working acceptably, based on instrument printouts and spectral quality.

XVI. Overall Evaluation of Data

Findings of the validation effort resulted in the following qualifications:

- On the basis of %D values in the associated CC standard above the 30 %D limit specified in the QAPP, results for trans-1,3-dichloropropene in samples analyzed by Method TO-15 SIM, as shown in Table 2, in the analytical windows between 15:57 on 4/21/10 and 11:44 on 4/23/10 were qualified as estimated (UJ).

- On the basis of field contamination, positive results in the APH analysis for C9 – C12 aliphatic hydrocarbons greater than the sample-specific (adjusted) quantitation limit (QL) but less than the action limit in samples IA-13, IA-13A, SV-14, and SV-03 were qualified as less than the reported value (U).

- On the basis of field contamination, positive results for tetrachloroethene in the TO-15 SIM analysis greater than the sample-specific (adjusted) QL but less than the action limit in samples OA-01, OA-02, OA-03, and OA-DUP01 were qualified as less than the reported value (U).

- On the basis of the unacceptable precision in the field duplicate pair, results in the TO-15 SIM analysis for total xylenes in IA-13 and IA-DUP01 were qualified as estimated (J).

- Results for tetrachloroethene in SV-07, SV-14, SV-DUP01, SV-13, SV-15, SV-12, SV-05, SV-10, SV-DUP02, SV-09, SV-08, SV-06, and SV-11 were rejected (R) due to detection of this compound outside the linear range of the instrument for method TO-15 SIM. Results for this compound were replaced with the acceptable concentrations from the more diluted analyses of these samples (SV-07DL, SV-14DL, SV-DUP01DL, SV-13DL, SV-15DL, SV-12DL, SV-05DL, SV-10DL, SV-DUP02DL, SV-09DL, SV-08DL, SV-06DL, and SV-11DL).

XVII. Documentation

The required records for canister cleanliness were submitted as two separate data packages, SDG Nos. L1004705 and L100472, and all required records were properly included with these data packages. Canister cleanliness and auxiliary equipment status was acceptable upon release from the laboratory, and appropriate checks and actions were performed as required upon sample and equipment receipt. The laboratory appropriately contacted the client in a timely manner for resolution of issues identified during the flow controller post-sampling checks.

The chain of custody (COC) records were present and accurately completed for all reported samples.

Data presentation was acceptable, with the following observations and exceptions:

- The set of analytes reported for the APH analyses on the Form 1s is a method requirement, although the QAPP lists only the hydrocarbon ranges as target analytes. Results for analytes which are present in both the APH and the TO-15 SIM analyses, other than the hydrocarbon ranges, should be disregarded on both the Form 1s and the electronic deliverable.

- Two compounds were reported with reporting limits slightly higher than specified in the QAPP. Total xylenes were reported with a quantitation limit of 0.260 ug/m^3, and benzene was reported with a target quantitation limit of 0.319 ug/m^3.

- The Alpha Analytical Reports are presented as the validated Form 1s; however, these laboratory –generated reports use an "ND" flag rather than the acceptable "U" qualifier, as found on the CLP-like Form 1s. Where "ND" is listed in the Results column, the compound was not detected and the reporting limit was not qualified.

- Inconsistencies in reporting results were noted in the original data package between the Alpha Analytical Reports, the electronic deliverable, and the CLP-like Form 1s for toluene results in samples SV-DUP01, SV-DUP02, and SV-06, and for the cis-1,2-dichloroethene result in IA-10. The laboratory replaced the incorrect records on June 4, 2010 (CLP-like Form 1s) and June 10, 2010 (electronic deliverable).

- The units used on the electronic deliverable were incorrectly listed as ppbv for the TO-15 SIM spike added for the LCS sample analyses, and the amount spiked was not presented for these analyses. The corrected electronic deliverable was received on June 10, 2010.

- The units used on the electronic deliverable for the method reporting limit (column "LIMIT2" which does not apply to sample specific analytical conditions) appear to be in ppbv, whether or not the units for that record (row) are in ppbv or ug/m^3. The laboratory has been asked to investigate whether this meets the specification for the electronic deliverable.

This validation report should be considered <u>part of the data package</u> for all future distributions of the TO-15 SIM and APH (volatiles in air) analysis data under SDG No. L1005229.

ATTACHMENT A

ELECTRONIC DELIVERABLE (EDD)
SDG No. L1005229
Selected Volatiles and Petroleum Hydrocarbons in Air Samples
(submitted electronically)

ATTACHMENT B

ORGANIC ANALYSIS DATA SUMMARY SHEETS (Form I)
SDG No. L1005229
Selected Volatiles and Petroleum Hydrocarbons in Air Samples

Project Name: UNIFIRST PROPERTY IA / VI
Project Number: 1-2114-2

Lab Number: L1005229
Report Date: 04/29/10

SAMPLE RESULTS

Lab ID: L1005229-01
Client ID: IA-12
Sample Location: WOBURN, MA
Matrix: Air
Anaytical Method: 48,TO-15-SIM
Analytical Date: 04/20/10 23:35
Analyst: AJ

Date Collected: 04/12/10 02:58
Date Received: 04/12/10
Field Prep: Not Specified

Parameter	ppbV Results	ppbV RDL	ug/m3 Results	ug/m3 RDL	Qualifier	Dilution Factor
Volatile Organics in Air by SIM - Mansfield Lab						
1,1,1-Trichloroethane	0.086	0.020	0.469	0.109		1
1,1,2-Trichloroethane	ND	0.020	ND	0.109		1
1,1-Dichloroethane	ND	0.020	ND	0.081		1
1,1-Dichloroethene	ND	0.020	ND	0.079		1
1,2,4-Trimethylbenzene	0.248	0.020	1.22	0.098		1
1,2-Dibromoethane	ND	0.010	ND	0.077		1
1,2-Dichloroethane	0.134	0.020	0.542	0.081		1
1,2-Dichloropropane	ND	0.020	ND	0.092		1
1,3-Butadiene	0.031	0.020	0.069	0.044		1
1,3-Dichlorobenzene	ND	0.020	ND	0.120		1
1,4-Dichlorobenzene	0.378	0.020	2.27	0.120		1
Benzene	0.332	0.100	1.06	0.319		1
Bromodichloromethane	ND	0.010	ND	0.067		1
Bromoform	ND	0.020	ND	0.206		1
Carbon tetrachloride	0.069	0.020	0.434	0.126		1
Chlorobenzene	ND	0.020	ND	0.092		1
Chloroform	0.032	0.020	0.156	0.098		1
cis-1,2-Dichloroethene	ND	0.020	ND	0.079		1
Ethylbenzene	0.192	0.020	0.833	0.087		1
Methylene chloride	ND	0.500	ND	1.74		1
Methyl tert butyl ether	0.036	0.020	0.130	0.072		1
Naphthalene	0.712	0.050	3.73	0.260		1
Xylenes, Total	0.724	0.060	3.14	0.260		1
Tetrachloroethene	6.64	0.020	45.0	0.136		1
Toluene	2.12	0.050	7.98	0.188		1

Project Name: UNIFIRST PROPERTY IA / VI
Project Number: 1-2114-2

Lab Number: L1005229
Report Date: 04/29/10

SAMPLE RESULTS

Lab ID: L1005229-01
Client ID: IA-12
Sample Location: WOBURN, MA

Date Collected: 04/12/10 02:58
Date Received: 04/12/10
Field Prep: Not Specified

Parameter	ppbV Results	ppbV RDL	ug/m3 Results	ug/m3 RDL	Qualifier	Dilution Factor
Volatile Organics in Air by SIM - Mansfield Lab						
trans-1,2-Dichloroethene	ND	0.020	ND	0.079		1
trans-1,3-Dichloropropene	ND	0.020	ND	0.091		1
Trichloroethene	0.041	0.020	0.220	0.107		1
Vinyl chloride	ND	0.020	ND	0.051		1
Isopropylbenzene	ND	0.500	ND	2.46		1

Project Name: UNIFIRST PROPERTY IA / VI **Lab Number:** L1005229

Project Number: 1-2114-2 **Report Date:** 04/29/10

SAMPLE RESULTS

Lab ID:	L1005229-01	Date Collected:	04/12/10 02:58
Client ID:	IA-12	Date Received:	04/12/10
Sample Location:	WOBURN, MA	Field Prep:	Not Specified
Matrix:	Air		
Analytical Method:	96,APH		
Analytical Date:	04/20/10 23:35		
Analyst:	AR		

Quality Control Information

Sample Type:	10 ml/min Composite
Sample Container Type:	Canister - 6 Liter
Sampling Flow Controller:	Mechanical
Sampling Zone:	Unknown
Sampling Flow Meter RPD of pre & post-sampling calibration check:	<=20%
Were all QA/QC procedures REQUIRED by the method followed?	Yes
Were all performance/acceptance standards for the required procedures achieved?	Yes
Were significant modifications made to the method as specified in Sect 11.1.2?	No

Parameter	Result	Qualifier	Units	RDL	Dilution Factor
Petroleum Hydrocarbons in Air - Mansfield Lab					
1,3-Butadiene	ND		ug/m3	2.0	1
Methyl tert butyl ether	ND		ug/m3	2.0	1
Benzene	ND		ug/m3	2.0	1
Toluene	9.2		ug/m3	2.0	1
Ethylbenzene	ND		ug/m3	2.0	1
p/m-Xylene	ND		ug/m3	4.0	1
o-Xylene	ND		ug/m3	2.0	1
Naphthalene	3.7		ug/m3	2.0	1
C5-C8 Aliphatics, Adjusted	48		ug/m3	12	1
C9-C12 Aliphatics, Adjusted	58		ug/m3	14	1
C9-C10 Aromatics	ND		ug/m3	10	1

Project Name: UNIFIRST PROPERTY IA / VI
Project Number: 1-2114-2

Lab Number: L1005229
Report Date: 04/29/10

SAMPLE RESULTS

Lab ID: L1005229-02
Client ID: IA-04
Sample Location: WOBURN, MA
Matrix: Air
Anaytical Method: 48,TO-15-SIM
Analytical Date: 04/21/10 00:14
Analyst: AJ

Date Collected: 04/12/10 02:35
Date Received: 04/12/10
Field Prep: Not Specified

Parameter	ppbV Results	ppbV RDL	ug/m3 Results	ug/m3 RDL	Qualifier	Dilution Factor
Volatile Organics in Air by SIM - Mansfield Lab						
1,1,1-Trichloroethane	0.054	0.020	0.294	0.109		1
1,1,2-Trichloroethane	ND	0.020	ND	0.109		1
1,1-Dichloroethane	ND	0.020	ND	0.081		1
1,1-Dichloroethene	ND	0.020	ND	0.079		1
1,2,4-Trimethylbenzene	0.326	0.020	1.60	0.098		1
1,2-Dibromoethane	ND	0.010	ND	0.077		1
1,2-Dichloroethane	0.206	0.020	0.833	0.081		1
1,2-Dichloropropane	ND	0.020	ND	0.092		1
1,3-Butadiene	0.021	0.020	0.046	0.044		1
1,3-Dichlorobenzene	ND	0.020	ND	0.120		1
1,4-Dichlorobenzene	1.93	0.020	11.6	0.120		1
Benzene	0.283	0.100	0.903	0.319		1
Bromodichloromethane	ND	0.010	ND	0.067		1
Bromoform	ND	0.020	ND	0.206		1
Carbon tetrachloride	0.067	0.020	0.421	0.126		1
Chlorobenzene	ND	0.020	ND	0.092		1
Chloroform	0.033	0.020	0.161	0.098		1
cis-1,2-Dichloroethene	ND	0.020	ND	0.079		1
Ethylbenzene	0.262	0.020	1.14	0.087		1
Methylene chloride	0.715	0.500	2.48	1.74		1
Methyl tert butyl ether	0.122	0.020	0.439	0.072		1
Naphthalene	0.799	0.050	4.18	0.260		1
Xylenes, Total	0.996	0.060	4.32	0.260		1
Tetrachloroethene	2.82	0.020	19.1	0.136		1
Toluene	5.20	0.050	19.6	0.188		1

Project Name: UNIFIRST PROPERTY IA / VI
Project Number: 1-2114-2

Lab Number: L1005229
Report Date: 04/29/10

SAMPLE RESULTS

Lab ID: L1005229-02
Client ID: IA-04
Sample Location: WOBURN, MA

Date Collected: 04/12/10 02:35
Date Received: 04/12/10
Field Prep: Not Specified

Parameter	ppbV Results	ppbV RDL	ug/m3 Results	ug/m3 RDL	Qualifier	Dilution Factor
Volatile Organics in Air by SIM - Mansfield Lab						
trans-1,2-Dichloroethene	ND	0.020	ND	0.079		1
trans-1,3-Dichloropropene	ND	0.020	ND	0.091		1
Trichloroethene	0.030	0.020	0.161	0.107		1
Vinyl chloride	ND	0.020	ND	0.051		1
Isopropylbenzene	ND	0.500	ND	2.46		1

Project Name:	UNIFIRST PROPERTY IA / VI	**Lab Number:**	L1005229
Project Number:	1-2114-2	**Report Date:**	04/29/10

SAMPLE RESULTS

Lab ID:	L1005229-02	Date Collected:	04/12/10 02:35
Client ID:	IA-04	Date Received:	04/12/10
Sample Location:	WOBURN, MA	Field Prep:	Not Specified
Matrix:	Air		
Analytical Method:	96,APH		
Analytical Date:	04/21/10 00:14		
Analyst:	AR		

Quality Control Information

Sample Type:	10 ml/min Composite
Sample Container Type:	Canister - 6 Liter
Sampling Flow Controller:	Mechanical
Sampling Zone:	Unknown
Sampling Flow Meter RPD of pre & post-sampling calibration check:	<=20%
Were all QA/QC procedures REQUIRED by the method followed?	Yes
Were all performance/acceptance standards for the required procedures achieved?	Yes
Were significant modifications made to the method as specified in Sect 11.1.2?	No

Parameter	Result	Qualifier	Units	RDL	Dilution Factor
Petroleum Hydrocarbons in Air - Mansfield Lab					
1,3-Butadiene	ND		ug/m3	2.0	1
Methyl tert butyl ether	ND		ug/m3	2.0	1
Benzene	ND		ug/m3	2.0	1
Toluene	21		ug/m3	2.0	1
Ethylbenzene	ND		ug/m3	2.0	1
p/m-Xylene	ND		ug/m3	4.0	1
o-Xylene	ND		ug/m3	2.0	1
Naphthalene	4.1		ug/m3	2.0	1
C5-C8 Aliphatics, Adjusted	66		ug/m3	12	1
C9-C12 Aliphatics, Adjusted	73		ug/m3	14	1
C9-C10 Aromatics	ND		ug/m3	10	1

Project Name: UNIFIRST PROPERTY IA / VI
Project Number: 1-2114-2

Lab Number: L1005229
Report Date: 04/29/10

SAMPLE RESULTS

Lab ID: L1005229-03
Client ID: IA-14
Sample Location: WOBURN, MA
Matrix: Air
Anaytical Method: 48,TO-15-SIM
Analytical Date: 04/21/10 00:53
Analyst: AJ

Date Collected: 04/12/10 01:40
Date Received: 04/12/10
Field Prep: Not Specified

Parameter	ppbV Results	ppbV RDL	ug/m3 Results	ug/m3 RDL	Qualifier	Dilution Factor
Volatile Organics in Air by SIM - Mansfield Lab						
1,1,1-Trichloroethane	0.040	0.020	0.218	0.109		1
1,1,2-Trichloroethane	ND	0.020	ND	0.109		1
1,1-Dichloroethane	ND	0.020	ND	0.081		1
1,1-Dichloroethene	ND	0.020	ND	0.079		1
1,2,4-Trimethylbenzene	0.287	0.020	1.41	0.098		1
1,2-Dibromoethane	ND	0.010	ND	0.077		1
1,2-Dichloroethane	0.131	0.020	0.530	0.081		1
1,2-Dichloropropane	ND	0.020	ND	0.092		1
1,3-Butadiene	ND	0.020	ND	0.044		1
1,3-Dichlorobenzene	ND	0.020	ND	0.120		1
1,4-Dichlorobenzene	0.702	0.020	4.22	0.120		1
Benzene	0.294	0.100	0.938	0.319		1
Bromodichloromethane	ND	0.010	ND	0.067		1
Bromoform	ND	0.020	ND	0.206		1
Carbon tetrachloride	0.070	0.020	0.440	0.126		1
Chlorobenzene	ND	0.020	ND	0.092		1
Chloroform	0.083	0.020	0.405	0.098		1
cis-1,2-Dichloroethene	ND	0.020	ND	0.079		1
Ethylbenzene	0.329	0.020	1.43	0.087		1
Methylene chloride	ND	0.500	ND	1.74		1
Methyl tert butyl ether	0.070	0.020	0.252	0.072		1
Naphthalene	0.511	0.050	2.68	0.260		1
Xylenes, Total	1.18	0.060	5.11	0.260		1
Tetrachloroethene	2.64	0.020	17.9	0.136		1
Toluene	2.54	0.050	9.58	0.188		1

Project Name: UNIFIRST PROPERTY IA / VI **Lab Number:** L1005229

Project Number: 1-2114-2 **Report Date:** 04/29/10

SAMPLE RESULTS

Lab ID: L1005229-03 Date Collected: 04/12/10 01:40

Client ID: IA-14 Date Received: 04/12/10

Sample Location: WOBURN, MA Field Prep: Not Specified

Parameter	ppbV Results	ppbV RDL	ug/m3 Results	ug/m3 RDL	Qualifier	Dilution Factor
Volatile Organics in Air by SIM - Mansfield Lab						
trans-1,2-Dichloroethene	ND	0.020	ND	0.079		1
trans-1,3-Dichloropropene	ND	0.020	ND	0.091		1
Trichloroethene	0.022	0.020	0.118	0.107		1
Vinyl chloride	ND	0.020	ND	0.051		1
Isopropylbenzene	ND	0.500	ND	2.46		1

Project Name: UNIFIRST PROPERTY IA / VI **Lab Number:** L1005229

Project Number: 1-2114-2 **Report Date:** 04/29/10

SAMPLE RESULTS

Lab ID:	L1005229-03	Date Collected:	04/12/10 01:40
Client ID:	*IA-14*	*Date Received:*	*04/12/10*
Sample Location:	WOBURN, MA	Field Prep:	Not Specified
Matrix:	Air		
Analytical Method:	96,APH		
Analytical Date:	04/21/10 00:53		
Analyst:	AR		

Quality Control Information

Sample Type:	10 ml/min Composite
Sample Container Type:	Canister - 6 Liter
Sampling Flow Controller:	Mechanical
Sampling Zone:	Unknown
Sampling Flow Meter RPD of pre & post-sampling calibration check:	<=20%
Were all QA/QC procedures REQUIRED by the method followed?	Yes
Were all performance/acceptance standards for the required procedures achieved?	Yes
Were significant modifications made to the method as specified in Sect 11.1.2?	No

Parameter	Result	Qualifier	Units	RDL	Dilution Factor
Petroleum Hydrocarbons in Air - Mansfield Lab					
1,3-Butadiene	ND		ug/m3	2.0	1
Methyl tert butyl ether	ND		ug/m3	2.0	1
Benzene	ND		ug/m3	2.0	1
Toluene	11		ug/m3	2.0	1
Ethylbenzene	ND		ug/m3	2.0	1
p/m-Xylene	4.1		ug/m3	4.0	1
o-Xylene	ND		ug/m3	2.0	1
Naphthalene	2.6		ug/m3	2.0	1
C5-C8 Aliphatics, Adjusted	74		ug/m3	12	1
C9-C12 Aliphatics, Adjusted	82		ug/m3	14	1
C9-C10 Aromatics	ND		ug/m3	10	1

Project Name: UNIFIRST PROPERTY IA / VI
Project Number: 1-2114-2

Lab Number: L1005229
Report Date: 04/29/10

SAMPLE RESULTS

Lab ID: L1005229-04
Client ID: OA-03
Sample Location: WOBURN, MA
Matrix: Air
Anaytical Method: 48,TO-15-SIM
Analytical Date: 04/21/10 01:32
Analyst: AJ

Date Collected: 04/12/10 02:12
Date Received: 04/12/10
Field Prep: Not Specified

Parameter	ppbV Results	ppbV RDL	ug/m3 Results	ug/m3 RDL	Qualifier	Dilution Factor
Volatile Organics in Air by SIM - Mansfield Lab						
1,1,1-Trichloroethane	0.069	0.020	0.376	0.109		1
1,1,2-Trichloroethane	ND	0.020	ND	0.109		1
1,1-Dichloroethane	ND	0.020	ND	0.081		1
1,1-Dichloroethene	ND	0.020	ND	0.079		1
1,2,4-Trimethylbenzene	0.054	0.020	0.265	0.098		1
1,2-Dibromoethane	ND	0.010	ND	0.077		1
1,2-Dichloroethane	0.020	0.020	ND	0.081		1
1,2-Dichloropropane	ND	0.020	ND	0.092		1
1,3-Butadiene	0.030	0.020	0.066	0.044		1
1,3-Dichlorobenzene	ND	0.020	ND	0.120		1
1,4-Dichlorobenzene	ND	0.020	ND	0.120		1
Benzene	0.257	0.100	0.820	0.319		1
Bromodichloromethane	ND	0.010	ND	0.067		1
Bromoform	ND	0.020	ND	0.206		1
Carbon tetrachloride	0.067	0.020	0.421	0.126		1
Chlorobenzene	ND	0.020	ND	0.092		1
Chloroform	0.027	0.020	0.132	0.098		1
cis-1,2-Dichloroethene	ND	0.020	ND	0.079		1
Ethylbenzene	0.072	0.020	0.312	0.087		1
Methylene chloride	ND	0.500	ND	1.74		1
Methyl tert butyl ether	ND	0.020	ND	0.072		1
Naphthalene	ND	0.050	ND	0.260		1
Xylenes, Total	0.251	0.060	1.09	0.260		1
Tetrachloroethene	0.032	0.020	0.217	0.136	CL	1
Toluene	0.575	0.050	2.16	0.188		1

6/5/10

Project Name: UNIFIRST PROPERTY IA / VI
Project Number: 1-2114-2
Lab Number: L1005229
Report Date: 04/29/10

SAMPLE RESULTS

Lab ID: L1005229-04
Client ID: OA-03
Sample Location: WOBURN, MA
Date Collected: 04/12/10 02:12
Date Received: 04/12/10
Field Prep: Not Specified

Parameter	ppbV Results	ppbV RDL	ug/m3 Results	ug/m3 RDL	Qualifier	Dilution Factor
Volatile Organics in Air by SIM - Mansfield Lab						
trans-1,2-Dichloroethene	ND	0.020	ND	0.079		1
trans-1,3-Dichloropropene	ND	0.020	ND	0.091		1
Trichloroethene	0.022	0.020	0.118	0.107		1
Vinyl chloride	ND	0.020	ND	0.051		1
Isopropylbenzene	ND	0.500	ND	2.46		1

Project Name: UNIFIRST PROPERTY IA / VI
Project Number: 1-2114-2

Lab Number: L1005229
Report Date: 04/29/10

SAMPLE RESULTS

Lab ID:	L1005229-04	Date Collected:	04/12/10 02:12
Client ID:	OA-03	Date Received:	04/12/10
Sample Location:	WOBURN, MA	Field Prep:	Not Specified
Matrix:	Air		
Analytical Method:	96,APH		
Analytical Date:	04/21/10 01:32		
Analyst:	AR		

Quality Control Information

Sample Type:	10 ml/min Composite
Sample Container Type:	Canister - 6 Liter
Sampling Flow Controller:	Mechanical
Sampling Zone:	Unknown
Sampling Flow Meter RPD of pre & post-sampling calibration check:	<=20%
Were all QA/QC procedures REQUIRED by the method followed?	Yes
Were all performance/acceptance standards for the required procedures achieved?	Yes
Were significant modifications made to the method as specified in Sect 11.1.2?	No

Parameter	Result	Qualifier	Units	RDL	Dilution Factor
Petroleum Hydrocarbons in Air - Mansfield Lab					
1,3-Butadiene	ND		ug/m3	2.0	1
Methyl tert butyl ether	ND		ug/m3	2.0	1
Benzene	ND		ug/m3	2.0	1
Toluene	2.3		ug/m3	2.0	1
Ethylbenzene	ND		ug/m3	2.0	1
p/m-Xylene	ND		ug/m3	4.0	1
o-Xylene	ND		ug/m3	2.0	1
Naphthalene	ND		ug/m3	2.0	1
C5-C8 Aliphatics, Adjusted	12		ug/m3	12	1
C9-C12 Aliphatics, Adjusted	ND		ug/m3	14	1
C9-C10 Aromatics	ND		ug/m3	10	1

Project Name: UNIFIRST PROPERTY IA / VI
Project Number: 1-2114-2
Lab Number: L1005229
Report Date: 04/29/10

SAMPLE RESULTS

Lab ID: L1005229-05
Client ID: IA-10A
Sample Location: WOBURN, MA
Matrix: Air
Anaytical Method: 48,TO-15-SIM
Analytical Date: 04/21/10 02:11
Analyst: AJ

Date Collected: 04/12/10 02:30
Date Received: 04/12/10
Field Prep: Not Specified

Parameter	ppbV Results	ppbV RDL	ug/m3 Results	ug/m3 RDL	Qualifier	Dilution Factor
Volatile Organics in Air by SIM - Mansfield Lab						
1,1,1-Trichloroethane	0.070	0.020	0.382	0.109		1
1,1,2-Trichloroethane	ND	0.020	ND	0.109		1
1,1-Dichloroethane	ND	0.020	ND	0.081		1
1,1-Dichloroethene	ND	0.020	ND	0.079		1
1,2,4-Trimethylbenzene	0.270	0.020	1.33	0.098		1
1,2-Dibromoethane	ND	0.010	ND	0.077		1
1,2-Dichloroethane	0.216	0.020	0.874	0.081		1
1,2-Dichloropropane	ND	0.020	ND	0.092		1
1,3-Butadiene	ND	0.020	ND	0.044		1
1,3-Dichlorobenzene	ND	0.020	ND	0.120		1
1,4-Dichlorobenzene	1.12	0.020	6.72	0.120		1
Benzene	0.284	0.100	0.906	0.319		1
Bromodichloromethane	ND	0.010	ND	0.067		1
Bromoform	ND	0.020	ND	0.206		1
Carbon tetrachloride	0.066	0.020	0.415	0.126		1
Chlorobenzene	ND	0.020	ND	0.092		1
Chloroform	0.030	0.020	0.146	0.098		1
cis-1,2-Dichloroethene	0.026	0.020	0.103	0.079		1
Ethylbenzene	0.219	0.020	0.950	0.087		1
Methylene chloride	0.503	0.500	1.74	1.74		1
Methyl tert butyl ether	0.074	0.020	0.266	0.072		1
Naphthalene	1.13	0.050	5.91	0.260		1
Xylenes, Total	0.812	0.060	3.52	0.260		1
Tetrachloroethene	4.95	0.020	33.5	0.136		1
Toluene	3.42	0.050	12.9	0.188		1

Project Name: UNIFIRST PROPERTY IA / VI
Project Number: 1-2114-2

Lab Number: L1005229
Report Date: 04/29/10

SAMPLE RESULTS

Lab ID: L1005229-05
Client ID: IA-10A
Sample Location: WOBURN, MA

Date Collected: 04/12/10 02:30
Date Received: 04/12/10
Field Prep: Not Specified

Parameter	ppbV Results	ppbV RDL	ug/m3 Results	ug/m3 RDL	Qualifier	Dilution Factor
Volatile Organics in Air by SIM - Mansfield Lab						
trans-1,2-Dichloroethene	ND	0.020	ND	0.079		1
trans-1,3-Dichloropropene	ND	0.020	ND	0.091		1
Trichloroethene	0.043	0.020	0.231	0.107		1
Vinyl chloride	ND	0.020	ND	0.051		1
Isopropylbenzene	ND	0.500	ND	2.46		1

Project Name: UNIFIRST PROPERTY IA / VI
Project Number: 1-2114-2

Lab Number: L1005229
Report Date: 04/29/10

SAMPLE RESULTS

Lab ID:	L1005229-05	Date Collected:	04/12/10 02:30
Client ID:	IA-10A	Date Received:	04/12/10
Sample Location:	WOBURN, MA	Field Prep:	Not Specified
Matrix:	Air		
Analytical Method:	96,APH		
Analytical Date:	04/21/10 02:11		
Analyst:	AR		

Quality Control Information

Sample Type:	10 ml/min Composite
Sample Container Type:	Canister - 6 Liter
Sampling Flow Controller:	Mechanical
Sampling Zone:	Unknown
Sampling Flow Meter RPD of pre & post-sampling calibration check:	<=20%
Were all QA/QC procedures REQUIRED by the method followed?	Yes
Were all performance/acceptance standards for the required procedures achieved?	Yes
Were significant modifications made to the method as specified in Sect 11.1.2?	No

Parameter	Result	Qualifier	Units	RDL	Dilution Factor
Petroleum Hydrocarbons in Air - Mansfield Lab					
1,3-Butadiene	ND		ug/m3	2.0	1
Methyl tert butyl ether	ND		ug/m3	2.0	1
Benzene	ND		ug/m3	2.0	1
Toluene	14		ug/m3	2.0	1
Ethylbenzene	ND		ug/m3	2.0	1
p/m-Xylene	ND		ug/m3	4.0	1
o-Xylene	ND		ug/m3	2.0	1
Naphthalene	5.7		ug/m3	2.0	1
C5-C8 Aliphatics, Adjusted	55		ug/m3	12	1
C9-C12 Aliphatics, Adjusted	47		ug/m3	14	1
C9-C10 Aromatics	ND		ug/m3	10	1

Project Name: UNIFIRST PROPERTY IA / VI
Project Number: 1-2114-2
Lab Number: L1005229
Report Date: 04/29/10

SAMPLE RESULTS

Lab ID: L1005229-06
Client ID: IA-11
Sample Location: WOBURN, MA
Matrix: Air
Anaytical Method: 48,TO-15-SIM
Analytical Date: 04/21/10 02:49
Analyst: AJ

Date Collected: 04/12/10 02:18
Date Received: 04/12/10
Field Prep: Not Specified

Parameter	ppbV Results	ppbV RDL	ug/m3 Results	ug/m3 RDL	Qualifier	Dilution Factor
Volatile Organics in Air by SIM - Mansfield Lab						
1,1,1-Trichloroethane	0.140	0.020	0.763	0.109		1
1,1,2-Trichloroethane	ND	0.020	ND	0.109		1
1,1-Dichloroethane	ND	0.020	ND	0.081		1
1,1-Dichloroethene	ND	0.020	ND	0.079		1
1,2,4-Trimethylbenzene	0.092	0.020	0.452	0.098		1
1,2-Dibromoethane	ND	0.010	ND	0.077		1
1,2-Dichloroethane	0.034	0.020	0.138	0.081		1
1,2-Dichloropropane	ND	0.020	ND	0.092		1
1,3-Butadiene	0.045	0.020	0.10	0.044		1
1,3-Dichlorobenzene	ND	0.020	ND	0.120		1
1,4-Dichlorobenzene	0.055	0.020	0.330	0.120		1
Benzene	0.249	0.100	0.795	0.319		1
Bromodichloromethane	ND	0.010	ND	0.067		1
Bromoform	ND	0.020	ND	0.206		1
Carbon tetrachloride	0.066	0.020	0.415	0.126		1
Chlorobenzene	ND	0.020	ND	0.092		1
Chloroform	0.029	0.020	0.141	0.098		1
cis-1,2-Dichloroethene	0.043	0.020	0.170	0.079		1
Ethylbenzene	0.111	0.020	0.482	0.087		1
Methylene chloride	ND	0.500	ND	1.74		1
Methyl tert butyl ether	ND	0.020	ND	0.072		1
Naphthalene	0.264	0.050	1.38	0.260		1
Xylenes, Total	0.411	0.060	1.78	0.260		1
Tetrachloroethene	2.92	0.020	19.8	0.136		1
Toluene	0.787	0.050	2.96	0.188		1

Project Name: UNIFIRST PROPERTY IA / VI
Project Number: 1-2114-2
Lab Number: L1005229
Report Date: 04/29/10

SAMPLE RESULTS

Lab ID: L1005229-06
Client ID: IA-11
Sample Location: WOBURN, MA

Date Collected: 04/12/10 02:18
Date Received: 04/12/10
Field Prep: Not Specified

Parameter	ppbV Results	ppbV RDL	ug/m3 Results	ug/m3 RDL	Qualifier	Dilution Factor
Volatile Organics in Air by SIM - Mansfield Lab						
trans-1,2-Dichloroethene	ND	0.020	ND	0.079		1
trans-1,3-Dichloropropene	ND	0.020	ND	0.091		1
Trichloroethene	0.097	0.020	0.521	0.107		1
Vinyl chloride	ND	0.020	ND	0.051		1
Isopropylbenzene	ND	0.500	ND	2.46		1

Project Name: UNIFIRST PROPERTY IA / VI **Lab Number:** L1005229

Project Number: 1-2114-2 **Report Date:** 04/29/10

SAMPLE RESULTS

Lab ID:	L1005229-06	Date Collected:	04/12/10 02:18
Client ID:	IA-11	Date Received:	04/12/10
Sample Location:	WOBURN, MA	Field Prep:	Not Specified
Matrix:	Air		
Analytical Method:	96,APH		
Analytical Date:	04/21/10 02:49		
Analyst:	AR		

Quality Control Information

Sample Type:	10 ml/min Composite
Sample Container Type:	Canister - 6 Liter
Sampling Flow Controller:	Mechanical
Sampling Zone:	Unknown
Sampling Flow Meter RPD of pre & post-sampling calibration check:	<=20%
Were all QA/QC procedures REQUIRED by the method followed?	Yes
Were all performance/acceptance standards for the required procedures achieved?	Yes
Were significant modifications made to the method as specified in Sect 11.1.2?	No

Parameter	Result	Qualifier	Units	RDL	Dilution Factor
Petroleum Hydrocarbons in Air - Mansfield Lab					
1,3-Butadiene	ND		ug/m3	2.0	1
Methyl tert butyl ether	ND		ug/m3	2.0	1
Benzene	ND		ug/m3	2.0	1
Toluene	3.2		ug/m3	2.0	1
Ethylbenzene	ND		ug/m3	2.0	1
p/m-Xylene	ND		ug/m3	4.0	1
o-Xylene	ND		ug/m3	2.0	1
Naphthalene	ND		ug/m3	2.0	1
C5-C8 Aliphatics, Adjusted	17		ug/m3	12	1
C9-C12 Aliphatics, Adjusted	ND		ug/m3	14	1
C9-C10 Aromatics	ND		ug/m3	10	1

Project Name: UNIFIRST PROPERTY IA / VI
Project Number: 1-2114-2

Lab Number: L1005229
Report Date: 04/29/10

SAMPLE RESULTS

Lab ID: L1005229-07
Client ID: IA-DUP02
Sample Location: WOBURN, MA
Matrix: Air
Anaytical Method: 48,TO-15-SIM
Analytical Date: 04/21/10 03:28
Analyst: AJ

Date Collected: 04/12/10 02:28
Date Received: 04/12/10
Field Prep: Not Specified

Parameter	ppbV Results	ppbV RDL	ug/m3 Results	ug/m3 RDL	Qualifier	Dilution Factor
Volatile Organics in Air by SIM - Mansfield Lab						
1,1,1-Trichloroethane	0.142	0.020	0.774	0.109		1
1,1,2-Trichloroethane	ND	0.020	ND	0.109		1
1,1-Dichloroethane	ND	0.020	ND	0.081		1
1,1-Dichloroethene	ND	0.020	ND	0.079		1
1,2,4-Trimethylbenzene	0.068	0.020	0.334	0.098		1
1,2-Dibromoethane	ND	0.010	ND	0.077		1
1,2-Dichloroethane	0.033	0.020	0.133	0.081		1
1,2-Dichloropropane	ND	0.020	ND	0.092		1
1,3-Butadiene	0.039	0.020	0.086	0.044		1
1,3-Dichlorobenzene	ND	0.020	ND	0.120		1
1,4-Dichlorobenzene	0.043	0.020	0.258	0.120		1
Benzene	0.257	0.100	0.820	0.319		1
Bromodichloromethane	ND	0.010	ND	0.067		1
Bromoform	ND	0.020	ND	0.206		1
Carbon tetrachloride	0.074	0.020	0.465	0.126		1
Chlorobenzene	ND	0.020	ND	0.092		1
Chloroform	0.030	0.020	0.146	0.098		1
cis-1,2-Dichloroethene	0.037	0.020	0.146	0.079		1
Ethylbenzene	0.091	0.020	0.395	0.087		1
Methylene chloride	ND	0.500	ND	1.74		1
Methyl tert butyl ether	ND	0.020	ND	0.072		1
Naphthalene	0.157	0.050	0.822	0.260		1
Xylenes, Total	0.324	0.060	1.40	0.260		1
Tetrachloroethene	2.54	0.020	17.2	0.136		1
Toluene	0.670	0.050	2.52	0.188		1

Project Name: UNIFIRST PROPERTY IA / VI
Project Number: 1-2114-2

Lab Number: L1005229
Report Date: 04/29/10

SAMPLE RESULTS

Lab ID: L1005229-07
Client ID: IA-DUP02
Sample Location: WOBURN, MA

Date Collected: 04/12/10 02:28
Date Received: 04/12/10
Field Prep: Not Specified

Parameter	ppbV Results	ppbV RDL	ug/m3 Results	ug/m3 RDL	Qualifier	Dilution Factor
Volatile Organics in Air by SIM - Mansfield Lab						
trans-1,2-Dichloroethene	ND	0.020	ND	0.079		1
trans-1,3-Dichloropropene	ND	0.020	ND	0.091		1
Trichloroethene	0.094	0.020	0.505	0.107		1
Vinyl chloride	ND	0.020	ND	0.051		1
Isopropylbenzene	ND	0.500	ND	2.46		1

Project Name: UNIFIRST PROPERTY IA / VI **Lab Number:** L1005229

Project Number: 1-2114-2 **Report Date:** 04/29/10

SAMPLE RESULTS

Lab ID:	L1005229-07	Date Collected:	04/12/10 02:28
Client ID:	IA-DUP02	Date Received:	04/12/10
Sample Location:	WOBURN, MA	Field Prep:	Not Specified
Matrix:	Air		
Analytical Method:	96,APH		
Analytical Date:	04/21/10 03:28		
Analyst:	AR		

Quality Control Information

Sample Type:	10 ml/min Composite
Sample Container Type:	Canister - 6 Liter
Sampling Flow Controller:	Mechanical
Sampling Zone:	Unknown
Sampling Flow Meter RPD of pre & post-sampling calibration check:	<=20%
Were all QA/QC procedures REQUIRED by the method followed?	Yes
Were all performance/acceptance standards for the required procedures achieved?	Yes
Were significant modifications made to the method as specified in Sect 11.1.2?	No

Parameter	Result	Qualifier	Units	RDL	Dilution Factor
Petroleum Hydrocarbons in Air - Mansfield Lab					
1,3-Butadiene	ND		ug/m3	2.0	1
Methyl tert butyl ether	ND		ug/m3	2.0	1
Benzene	ND		ug/m3	2.0	1
Toluene	3.0		ug/m3	2.0	1
Ethylbenzene	ND		ug/m3	2.0	1
p/m-Xylene	ND		ug/m3	4.0	1
o-Xylene	ND		ug/m3	2.0	1
Naphthalene	ND		ug/m3	2.0	1
C5-C8 Aliphatics, Adjusted	17		ug/m3	12	1
C9-C12 Aliphatics, Adjusted	ND		ug/m3	14	1
C9-C10 Aromatics	ND		ug/m3	10	1

Project Name: UNIFIRST PROPERTY IA / VI
Project Number: 1-2114-2

Lab Number: L1005229
Report Date: 04/29/10

SAMPLE RESULTS

Lab ID: L1005229-08
Client ID: IA-09
Sample Location: WOBURN, MA
Matrix: Air
Anaytical Method: 48,TO-15-SIM
Analytical Date: 04/21/10 04:07
Analyst: AJ

Date Collected: 04/12/10 01:10
Date Received: 04/12/10
Field Prep: Not Specified

Parameter	ppbV Results	ppbV RDL	ug/m3 Results	ug/m3 RDL	Qualifier	Dilution Factor
Volatile Organics in Air by SIM - Mansfield Lab						
1,1,1-Trichloroethane	0.026	0.020	0.142	0.109		1
1,1,2-Trichloroethane	ND	0.020	ND	0.109		1
1,1-Dichloroethane	ND	0.020	ND	0.081		1
1,1-Dichloroethene	ND	0.020	ND	0.079		1
1,2,4-Trimethylbenzene	0.084	0.020	0.413	0.098		1
1,2-Dibromoethane	ND	0.010	ND	0.077		1
1,2-Dichloroethane	0.060	0.020	0.243	0.081		1
1,2-Dichloropropane	ND	0.020	ND	0.092		1
1,3-Butadiene	0.050	0.020	0.110	0.044		1
1,3-Dichlorobenzene	ND	0.020	ND	0.120		1
1,4-Dichlorobenzene	0.063	0.020	0.378	0.120		1
Benzene	0.447	0.100	1.43	0.319		1
Bromodichloromethane	ND	0.010	ND	0.067		1
Bromoform	ND	0.020	ND	0.206		1
Carbon tetrachloride	0.066	0.020	0.415	0.126		1
Chlorobenzene	ND	0.020	ND	0.092		1
Chloroform	0.040	0.020	0.195	0.098		1
cis-1,2-Dichloroethene	ND	0.020	ND	0.079		1
Ethylbenzene	0.248	0.020	1.08	0.087		1
Methylene chloride	ND	0.500	ND	1.74		1
Methyl tert butyl ether	0.284	0.020	1.02	0.072		1
Naphthalene	ND	0.050	ND	0.260		1
Xylenes, Total	0.838	0.060	3.64	0.260		1
Tetrachloroethene	0.643	0.020	4.36	0.136		1
Toluene	2.25	0.050	8.46	0.188		1

Project Name: UNIFIRST PROPERTY IA / VI
Project Number: 1-2114-2

Lab Number: L1005229
Report Date: 04/29/10

SAMPLE RESULTS

Lab ID: L1005229-08
Client ID: IA-09
Sample Location: WOBURN, MA

Date Collected: 04/12/10 01:10
Date Received: 04/12/10
Field Prep: Not Specified

Parameter	ppbV Results	ppbV RDL	ug/m3 Results	ug/m3 RDL	Qualifier	Dilution Factor
Volatile Organics in Air by SIM - Mansfield Lab						
trans-1,2-Dichloroethene	ND	0.020	ND	0.079		1
trans-1,3-Dichloropropene	ND	0.020	ND	0.091		1
Trichloroethene	0.021	0.020	0.113	0.107		1
Vinyl chloride	ND	0.020	ND	0.051		1
Isopropylbenzene	ND	0.500	ND	2.46		1

Project Name: UNIFIRST PROPERTY IA / VI
Project Number: 1-2114-2
Lab Number: L1005229
Report Date: 04/29/10

SAMPLE RESULTS

Lab ID:	L1005229-08	Date Collected:	04/12/10 01:10
Client ID:	IA-09	Date Received:	04/12/10
Sample Location:	WOBURN, MA	Field Prep:	Not Specified
Matrix:	Air		
Analytical Method:	96,APH		
Analytical Date:	04/21/10 04:07		
Analyst:	AR		

Quality Control Information

Sample Type:	10 ml/min Composite
Sample Container Type:	Canister - 6 Liter
Sampling Flow Controller:	Mechanical
Sampling Zone:	Unknown
Sampling Flow Meter RPD of pre & post-sampling calibration check:	<=20%
Were all QA/QC procedures REQUIRED by the method followed?	Yes
Were all performance/acceptance standards for the required procedures achieved?	Yes
Were significant modifications made to the method as specified in Sect 11.1.2?	No

Parameter	Result	Qualifier	Units	RDL	Dilution Factor
Petroleum Hydrocarbons in Air - Mansfield Lab					
1,3-Butadiene	ND		ug/m3	2.0	1
Methyl tert butyl ether	ND		ug/m3	2.0	1
Benzene	ND		ug/m3	2.0	1
Toluene	9.8		ug/m3	2.0	1
Ethylbenzene	ND		ug/m3	2.0	1
p/m-Xylene	ND		ug/m3	4.0	1
o-Xylene	ND		ug/m3	2.0	1
Naphthalene	ND		ug/m3	2.0	1
C5-C8 Aliphatics, Adjusted	70		ug/m3	12	1
C9-C12 Aliphatics, Adjusted	ND		ug/m3	14	1
C9-C10 Aromatics	ND		ug/m3	10	1

Project Name: UNIFIRST PROPERTY IA / VI
Project Number: 1-2114-2
Lab Number: L1005229
Report Date: 04/29/10

SAMPLE RESULTS

Lab ID: L1005229-09
Client ID: IA-08
Sample Location: WOBURN, MA
Matrix: Air
Anaytical Method: 48,TO-15-SIM
Analytical Date: 04/21/10 04:45
Analyst: AJ

Date Collected: 04/12/10 01:55
Date Received: 04/12/10
Field Prep: Not Specified

Parameter	ppbV Results	ppbV RDL	ug/m3 Results	ug/m3 RDL	Qualifier	Dilution Factor
Volatile Organics in Air by SIM - Mansfield Lab						
1,1,1-Trichloroethane	0.042	0.020	0.229	0.109		1
1,1,2-Trichloroethane	ND	0.020	ND	0.109		1
1,1-Dichloroethane	ND	0.020	ND	0.081		1
1,1-Dichloroethene	ND	0.020	ND	0.079		1
1,2,4-Trimethylbenzene	0.243	0.020	1.19	0.098		1
1,2-Dibromoethane	ND	0.010	ND	0.077		1
1,2-Dichloroethane	0.119	0.020	0.481	0.081		1
1,2-Dichloropropane	ND	0.020	ND	0.092		1
1,3-Butadiene	0.025	0.020	0.055	0.044		1
1,3-Dichlorobenzene	ND	0.020	ND	0.120		1
1,4-Dichlorobenzene	0.684	0.020	4.11	0.120		1
Benzene	0.347	0.100	1.11	0.319		1
Bromodichloromethane	ND	0.010	ND	0.067		1
Bromoform	ND	0.020	ND	0.206		1
Carbon tetrachloride	0.078	0.020	0.490	0.126		1
Chlorobenzene	ND	0.020	ND	0.092		1
Chloroform	0.045	0.020	0.220	0.098		1
cis-1,2-Dichloroethene	ND	0.020	ND	0.079		1
Ethylbenzene	0.353	0.020	1.53	0.087		1
Methylene chloride	ND	0.500	ND	1.74		1
Methyl tert butyl ether	0.073	0.020	0.263	0.072		1
Naphthalene	0.368	0.050	1.93	0.260		1
Xylenes, Total	1.24	0.060	5.37	0.260		1
Tetrachloroethene	2.26	0.020	15.3	0.136		1
Toluene	2.59	0.050	9.75	0.188		1

Project Name: UNIFIRST PROPERTY IA / VI
Project Number: 1-2114-2
Lab Number: L1005229
Report Date: 04/29/10

SAMPLE RESULTS

Lab ID: L1005229-09
Client ID: IA-08
Sample Location: WOBURN, MA
Date Collected: 04/12/10 01:55
Date Received: 04/12/10
Field Prep: Not Specified

Parameter	ppbV Results	ppbV RDL	ug/m3 Results	ug/m3 RDL	Qualifier	Dilution Factor
Volatile Organics in Air by SIM - Mansfield Lab						
trans-1,2-Dichloroethene	ND	0.020	ND	0.079		1
trans-1,3-Dichloropropene	ND	0.020	ND	0.091		1
Trichloroethene	0.026	0.020	0.140	0.107		1
Vinyl chloride	ND	0.020	ND	0.051		1
Isopropylbenzene	ND	0.500	ND	2.46		1

Project Name: UNIFIRST PROPERTY IA / VI **Lab Number:** L1005229

Project Number: 1-2114-2 **Report Date:** 04/29/10

SAMPLE RESULTS

Lab ID:	L1005229-09	Date Collected:	04/12/10 01:55
Client ID:	IA-08	Date Received:	04/12/10
Sample Location:	WOBURN, MA	Field Prep:	Not Specified
Matrix:	Air		
Analytical Method:	96,APH		
Analytical Date:	04/21/10 04:45		
Analyst:	AR		

Quality Control Information

Sample Type:	10 ml/min Composite
Sample Container Type:	Canister - 6 Liter
Sampling Flow Controller:	Mechanical
Sampling Zone:	Unknown
Sampling Flow Meter RPD of pre & post-sampling calibration check:	<=20%
Were all QA/QC procedures REQUIRED by the method followed?	Yes
Were all performance/acceptance standards for the required procedures achieved?	Yes
Were significant modifications made to the method as specified in Sect 11.1.2?	No

Parameter	Result	Qualifier	Units	RDL	Dilution Factor
Petroleum Hydrocarbons in Air - Mansfield Lab					
1,3-Butadiene	ND		ug/m3	2.0	1
Methyl tert butyl ether	ND		ug/m3	2.0	1
Benzene	ND		ug/m3	2.0	1
Toluene	12		ug/m3	2.0	1
Ethylbenzene	ND		ug/m3	2.0	1
p/m-Xylene	4.5		ug/m3	4.0	1
o-Xylene	ND		ug/m3	2.0	1
Naphthalene	ND		ug/m3	2.0	1
C5-C8 Aliphatics, Adjusted	87		ug/m3	12	1
C9-C12 Aliphatics, Adjusted	69		ug/m3	14	1
C9-C10 Aromatics	ND		ug/m3	10	1

Project Name: UNIFIRST PROPERTY IA / VI
Project Number: 1-2114-2

Lab Number: L1005229
Report Date: 04/29/10

SAMPLE RESULTS

Lab ID: L1005229-10
Client ID: IA-05
Sample Location: WOBURN, MA
Matrix: Air
Anaytical Method: 48,TO-15-SIM
Analytical Date: 04/21/10 05:24
Analyst: AJ

Date Collected: 04/12/10 02:06
Date Received: 04/12/10
Field Prep: Not Specified

Parameter	ppbV Results	ppbV RDL	ug/m3 Results	ug/m3 RDL	Qualifier	Dilution Factor
Volatile Organics in Air by SIM - Mansfield Lab						
1,1,1-Trichloroethane	0.040	0.020	0.218	0.109		1
1,1,2-Trichloroethane	ND	0.020	ND	0.109		1
1,1-Dichloroethane	ND	0.020	ND	0.081		1
1,1-Dichloroethene	ND	0.020	ND	0.079		1
1,2,4-Trimethylbenzene	0.208	0.020	1.02	0.098		1
1,2-Dibromoethane	ND	0.010	ND	0.077		1
1,2-Dichloroethane	0.088	0.020	0.356	0.081		1
1,2-Dichloropropane	ND	0.020	ND	0.092		1
1,3-Butadiene	0.044	0.020	0.097	0.044		1
1,3-Dichlorobenzene	ND	0.020	ND	0.120		1
1,4-Dichlorobenzene	0.238	0.020	1.43	0.120		1
Benzene	0.356	0.100	1.14	0.319		1
Bromodichloromethane	ND	0.010	ND	0.067		1
Bromoform	ND	0.020	ND	0.206		1
Carbon tetrachloride	0.064	0.020	0.402	0.126		1
Chlorobenzene	ND	0.020	ND	0.092		1
Chloroform	0.031	0.020	0.151	0.098		1
cis-1,2-Dichloroethene	ND	0.020	ND	0.079		1
Ethylbenzene	0.233	0.020	1.01	0.087		1
Methylene chloride	ND	0.500	ND	1.74		1
Methyl tert butyl ether	0.046	0.020	0.166	0.072		1
Naphthalene	0.224	0.100	1.17	0.524		1
Xylenes, Total	0.926	0.060	4.02	0.260		1
Tetrachloroethene	1.45	0.020	9.83	0.136		1
Toluene	2.01	0.050	7.56	0.188		1

Project Name: UNIFIRST PROPERTY IA / VI
Project Number: 1-2114-2
Lab Number: L1005229
Report Date: 04/29/10

SAMPLE RESULTS

Lab ID: *L1005229-10*
Client ID: IA-05
Sample Location: *WOBURN, MA*

Date Collected: 04/12/10 02:06
Date Received: 04/12/10
Field Prep: Not Specified

Parameter	ppbV Results	ppbV RDL	ug/m3 Results	ug/m3 RDL	Qualifier	Dilution Factor
Volatile Organics in Air by SIM - Mansfield Lab						
trans-1,2-Dichloroethene	ND	0.020	ND	0.079		1
trans-1,3-Dichloropropene	ND	0.020	ND	0.091		1
Trichloroethene	0.022	0.020	0.118	0.107		1
Vinyl chloride	ND	0.020	ND	0.051		1
Isopropylbenzene	ND	0.500	ND	2.46		1

Project Name:	UNIFIRST PROPERTY IA / VI	**Lab Number:**	L1005229
Project Number:	1-2114-2	**Report Date:**	04/29/10

SAMPLE RESULTS

Lab ID:	L1005229-10	Date Collected:	04/12/10 02:06
Client ID:	IA-05	Date Received:	04/12/10
Sample Location:	WOBURN, MA	Field Prep:	Not Specified
Matrix:	Air		
Analytical Method:	96,APH		
Analytical Date:	04/21/10 05:24		
Analyst:	AR		

Quality Control Information

Sample Type:	10 ml/min Composite
Sample Container Type:	Canister - 6 Liter
Sampling Flow Controller:	Mechanical
Sampling Zone:	Unknown
Sampling Flow Meter RPD of pre & post-sampling calibration check:	<=20%
Were all QA/QC procedures REQUIRED by the method followed?	Yes
Were all performance/acceptance standards for the required procedures achieved?	Yes
Were significant modifications made to the method as specified in Sect 11.1.2?	No

Parameter	Result	Qualifier	Units	RDL	Dilution Factor
Petroleum Hydrocarbons in Air - Mansfield Lab					
1,3-Butadiene	ND		ug/m3	2.0	1
Methyl tert butyl ether	ND		ug/m3	2.0	1
Benzene	ND		ug/m3	2.0	1
Toluene	8.3		ug/m3	2.0	1
Ethylbenzene	ND		ug/m3	2.0	1
p/m-Xylene	ND		ug/m3	4.0	1
o-Xylene	ND		ug/m3	2.0	1
Naphthalene	ND		ug/m3	2.0	1
C5-C8 Aliphatics, Adjusted	44		ug/m3	12	1
C9-C12 Aliphatics, Adjusted	28		ug/m3	14	1
C9-C10 Aromatics	ND		ug/m3	10	1

Project Name: UNIFIRST PROPERTY IA / VI
Project Number: 1-2114-2

Lab Number: L1005229
Report Date: 04/29/10

SAMPLE RESULTS

Lab ID: L1005229-11
Client ID: OA-01
Sample Location: WOBURN, MA
Matrix: Air
Anaytical Method: 48,TO-15-SIM
Analytical Date: 04/21/10 06:02
Analyst: AJ

Date Collected: 04/12/10 01:00
Date Received: 04/12/10
Field Prep: Not Specified

Parameter	ppbV Results	ppbV RDL	ug/m3 Results	ug/m3 RDL	Qualifier	Dilution Factor
Volatile Organics in Air by SIM - Mansfield Lab						
1,1,1-Trichloroethane	0.024	0.020	0.131	0.109		1
1,1,2-Trichloroethane	ND	0.020	ND	0.109		1
1,1-Dichloroethane	ND	0.020	ND	0.081		1
1,1-Dichloroethene	ND	0.020	ND	0.079		1
1,2,4-Trimethylbenzene	0.070	0.020	0.344	0.098		1
1,2-Dibromoethane	ND	0.010	ND	0.077		1
1,2-Dichloroethane	0.023	0.020	0.093	0.081		1
1,2-Dichloropropane	ND	0.020	ND	0.092		1
1,3-Butadiene	0.056	0.020	0.124	0.044		1
1,3-Dichlorobenzene	ND	0.020	ND	0.120		1
1,4-Dichlorobenzene	ND	0.020	ND	0.120		1
Benzene	0.267	0.100	0.852	0.319		1
Bromodichloromethane	ND	0.010	ND	0.067		1
Bromoform	ND	0.020	ND	0.206		1
Carbon tetrachloride	0.067	0.020	0.421	0.126		1
Chlorobenzene	ND	0.020	ND	0.092		1
Chloroform	0.033	0.020	0.161	0.098		1
cis-1,2-Dichloroethene	ND	0.020	ND	0.079		1
Ethylbenzene	0.085	0.020	0.369	0.087		1
Methylene chloride	0.689	0.500	2.39	1.74		1
Methyl tert butyl ether	ND	0.020	ND	0.072		1
Naphthalene	ND	0.050	ND	0.260		1
Xylenes, Total	0.320	0.060	1.39	0.260		1
Tetrachloroethene	0.023	0.020	0.156	0.136	U	1
Toluene	0.616	0.050	2.32	0.188		1

Project Name: UNIFIRST PROPERTY IA / VI
Project Number: 1-2114-2
Lab Number: L1005229
Report Date: 04/29/10

SAMPLE RESULTS

Lab ID: L1005229-11
Client ID: OA-01
Sample Location: WOBURN, MA
Date Collected: 04/12/10 01:00
Date Received: 04/12/10
Field Prep: Not Specified

Parameter	ppbV Results	ppbV RDL	ug/m3 Results	ug/m3 RDL	Qualifier	Dilution Factor
Volatile Organics in Air by SIM - Mansfield Lab						
trans-1,2-Dichloroethene	ND	0.020	ND	0.079		1
trans-1,3-Dichloropropene	ND	0.020	ND	0.091		1
Trichloroethene	0.022	0.020	0.118	0.107		1
Vinyl chloride	ND	0.020	ND	0.051		1
Isopropylbenzene	ND	0.500	ND	2.46		1

Project Name: UNIFIRST PROPERTY IA / VI
Project Number: 1-2114-2

Lab Number: L1005229
Report Date: 04/29/10

SAMPLE RESULTS

Lab ID:	L1005229-11	Date Collected:	04/12/10 01:00
Client ID:	OA-01	Date Received:	04/12/10
Sample Location:	WOBURN, MA	Field Prep:	Not Specified
Matrix:	Air		
Analytical Method:	96,APH		
Analytical Date:	04/21/10 06:02		
Analyst:	AR		

Quality Control Information

Sample Type:	10 ml/min Composite
Sample Container Type:	Canister - 6 Liter
Sampling Flow Controller:	Mechanical
Sampling Zone:	Unknown
Sampling Flow Meter RPD of pre & post-sampling calibration check:	<=20%
Were all QA/QC procedures REQUIRED by the method followed?	Yes
Were all performance/acceptance standards for the required procedures achieved?	Yes
Were significant modifications made to the method as specified in Sect 11.1.2?	No

Parameter	Result	Qualifier	Units	RDL	Dilution Factor
Petroleum Hydrocarbons in Air - Mansfield Lab					
1,3-Butadiene	ND		ug/m3	2.0	1
Methyl tert butyl ether	ND		ug/m3	2.0	1
Benzene	ND		ug/m3	2.0	1
Toluene	2.5		ug/m3	2.0	1
Ethylbenzene	ND		ug/m3	2.0	1
p/m-Xylene	ND		ug/m3	4.0	1
o-Xylene	ND		ug/m3	2.0	1
Naphthalene	ND		ug/m3	2.0	1
C5-C8 Aliphatics, Adjusted	16		ug/m3	12	1
C9-C12 Aliphatics, Adjusted	ND		ug/m3	14	1
C9-C10 Aromatics	ND		ug/m3	10	1

Project Name: UNIFIRST PROPERTY IA / VI
Project Number: 1-2114-2

Lab Number: L1005229
Report Date: 04/29/10

SAMPLE RESULTS

Lab ID: L1005229-12 D
Client ID: SV-07
Sample Location: WOBURN, MA
Matrix: Soil_Vapor
Anaytical Method: 48,TO-15-SIM
Analytical Date: 04/23/10 03:40
Analyst: AJ

Date Collected: 04/12/10 05:06
Date Received: 04/12/10
Field Prep: Not Specified

Parameter	ppbV Results	ppbV RDL	ug/m3 Results	ug/m3 RDL	Qualifier	Dilution Factor
Volatile Organics in Air by SIM - Mansfield Lab						
1,1,1-Trichloroethane	51.5	0.200	280	1.09		10
1,1,2-Trichloroethane	ND	0.200	ND	1.09		10
1,1-Dichloroethane	0.870	0.200	3.52	0.809		10
1,1-Dichloroethene	ND	0.200	ND	0.792		10
1,2,4-Trimethylbenzene	ND	0.200	ND	0.982		10
1,2-Dibromoethane	ND	0.100	ND	0.768		10
1,2-Dichloroethane	ND	0.200	ND	0.809		10
1,2-Dichloropropane	ND	0.200	ND	0.924		10
1,3-Butadiene	ND	0.200	ND	0.442		10
1,3-Dichlorobenzene	ND	0.200	ND	1.20		10
1,4-Dichlorobenzene	ND	0.200	ND	1.20		10
Benzene	ND	1.00	ND	3.19		10
Bromodichloromethane	ND	0.100	ND	0.670		10
Bromoform	ND	0.200	ND	2.06		10
Carbon tetrachloride	ND	0.200	ND	1.26		10
Chlorobenzene	ND	0.200	ND	0.920		10
Chloroform	0.530	0.200	2.58	0.976		10
cis-1,2-Dichloroethene	ND	0.200	ND	0.792		10
Ethylbenzene	ND	0.200	ND	0.868		10
Methylene chloride	ND	5.00	ND	17.4		10
Methyl tert butyl ether	ND	0.200	ND	0.720		10
Naphthalene	ND	0.500	ND	2.62		10
Xylenes, Total	ND	0.600	ND	2.60		10
Tetrachloroethene	25000 ~~6990~~	14.7 ~~0.200~~	169000 ~~47400~~	99.9 ~~1.36~~	~~E~~	736.8 ~~10~~
Toluene	ND	0.500	ND	1.88		10

Project Name: UNIFIRST PROPERTY IA / VI
Project Number: 1-2114-2

Lab Number: L1005229
Report Date: 04/29/10

SAMPLE RESULTS

Lab ID: L1005229-12 D
Client ID: SV-07
Sample Location: WOBURN, MA

Date Collected: 04/12/10 05:06
Date Received: 04/12/10
Field Prep: Not Specified

Parameter	ppbV Results	ppbV RDL	ug/m3 Results	ug/m3 RDL	Qualifier	Dilution Factor
Volatile Organics in Air by SIM - Mansfield Lab						
trans-1,2-Dichloroethene	ND	0.200	ND	0.792		10
trans-1,3-Dichloropropene	~~ND~~	0.200	~~ND~~	0.907	UJ	10
Trichloroethene	2.59	0.200	13.9	1.07		10
Vinyl chloride	ND	0.200	ND	0.511		10
Isopropylbenzene	ND	5.00	ND	24.6		10

6/5/10

Project Name: UNIFIRST PROPERTY IA / VI
Project Number: 1-2114-2

Lab Number: L1005229
Report Date: 04/29/10

SAMPLE RESULTS

Lab ID:	L1005229-12 D2	Date Collected:	04/12/10 05:06
Client ID:	SV-07 DW	Date Received:	04/12/10
Sample Location:	WOBURN, MA	Field Prep:	Not Specified
Matrix:	Soil_Vapor		
Anaytical Method:	48,TO-15-SIM		
Analytical Date:	04/24/10 11:20		
Analyst:	AJ		

	ppbV		ug/m3			
Parameter	**Results**	**RDL**	**Results**	**RDL**	**Qualifier**	**Dilution Factor**
Volatile Organics in Air by SIM - Mansfield Lab						
Tetrachloroethene	25000	14.7	169000	99.9		736.8

DUP
c/STE

Project Name: UNIFIRST PROPERTY IA / VI
Project Number: 1-2114-2
Lab Number: L1005229
Report Date: 04/29/10

SAMPLE RESULTS

Lab ID:	L1005229-12	D	Date Collected:	04/12/10 05:06
Client ID:	SV-07		Date Received:	04/12/10
Sample Location:	WOBURN, MA		Field Prep:	Not Specified
Matrix:	Soil_Vapor			
Analytical Method:	96,APH			
Analytical Date:	04/23/10 03:40			
Analyst:	RY			

Quality Control Information

Sample Type:	100 ml/min Composite
Sample Container Type:	Canister - 6 Liter
Sampling Flow Controller:	Mechanical
Sampling Zone:	Unknown
Sampling Flow Meter RPD of pre & post-sampling calibration check:	<=20%
Were all QA/QC procedures REQUIRED by the method followed?	Yes
Were all performance/acceptance standards for the required procedures achieved?	Yes
Were significant modifications made to the method as specified in Sect 11.1.2?	No

Parameter	Result	Qualifier	Units	RDL	Dilution Factor
Petroleum Hydrocarbons in Air - Mansfield Lab					
1,3-Butadiene	ND		ug/m3	20	10
Methyl tert butyl ether	ND		ug/m3	20	10
Benzene	ND		ug/m3	20	10
Toluene	ND		ug/m3	20	10
Ethylbenzene	ND		ug/m3	20	10
p/m-Xylene	ND		ug/m3	40	10
o-Xylene	ND		ug/m3	20	10
Naphthalene	ND		ug/m3	20	10
C5-C8 Aliphatics, Adjusted	ND		ug/m3	120	10
C9-C12 Aliphatics, Adjusted	ND		ug/m3	140	10
C9-C10 Aromatics	ND		ug/m3	100	10

Project Name: UNIFIRST PROPERTY IA / VI
Project Number: 1-2114-2

Lab Number: L1005229
Report Date: 04/29/10

SAMPLE RESULTS

Lab ID: L1005229-13
Client ID: IA-13
Sample Location: WOBURN, MA
Matrix: Air
Anaytical Method: 48,TO-15-SIM
Analytical Date: 04/21/10 06:40
Analyst: AJ

Date Collected: 04/12/10 02:46
Date Received: 04/12/10
Field Prep: Not Specified

Parameter	ppbV Results	ppbV RDL	ug/m3 Results	ug/m3 RDL	Qualifier	Dilution Factor
Volatile Organics in Air by SIM - Mansfield Lab						
1,1,1-Trichloroethane	0.122	0.020	0.665	0.109		1
1,1,2-Trichloroethane	ND	0.020	ND	0.109		1
1,1-Dichloroethane	0.022	0.020	0.089	0.081		1
1,1-Dichloroethene	ND	0.020	ND	0.079		1
1,2,4-Trimethylbenzene	0.148	0.020	0.727	0.098		1
1,2-Dibromoethane	ND	0.010	ND	0.077		1
1,2-Dichloroethane	0.099	0.020	0.400	0.081		1
1,2-Dichloropropane	ND	0.020	ND	0.092		1
1,3-Butadiene	0.034	0.020	0.075	0.044		1
1,3-Dichlorobenzene	ND	0.020	ND	0.120		1
1,4-Dichlorobenzene	0.269	0.020	1.62	0.120		1
Benzene	0.239	0.100	0.763	0.319		1
Bromodichloromethane	ND	0.010	ND	0.067		1
Bromoform	ND	0.020	ND	0.206		1
Carbon tetrachloride	0.066	0.020	0.415	0.126		1
Chlorobenzene	ND	0.020	ND	0.092		1
Chloroform	0.028	0.020	0.136	0.098		1
cis-1,2-Dichloroethene	0.049	0.020	0.194	0.079		1
Ethylbenzene	0.134	0.020	0.581	0.087		1
Methylene chloride	ND	0.500	ND	1.74		1
Methyl tert butyl ether	0.023	0.020	0.083	0.072		1
Naphthalene	1.27	0.050	6.63	0.260		1
Xylenes, Total	0.498	0.060	2.16	0.260	J	1
Tetrachloroethene	7.11	0.020	48.2	0.136		1
Toluene	1.29	0.050	4.87	0.188		1

6/5/10

Project Name: UNIFIRST PROPERTY IA / VI
Project Number: 1-2114-2

Lab Number: L1005229
Report Date: 04/29/10

SAMPLE RESULTS

Lab ID: L1005229-13
Client ID: IA-13
Sample Location: WOBURN, MA

Date Collected: 04/12/10 02:46
Date Received: 04/12/10
Field Prep: Not Specified

Parameter	ppbV Results	ppbV RDL	ug/m3 Results	ug/m3 RDL	Qualifier	Dilution Factor
Volatile Organics in Air by SIM - Mansfield Lab						
trans-1,2-Dichloroethene	ND	0.020	ND	0.079		1
trans-1,3-Dichloropropene	ND	0.020	ND	0.091		1
Trichloroethene	0.090	0.020	0.483	0.107		1
Vinyl chloride	ND	0.020	ND	0.051		1
Isopropylbenzene	ND	0.500	ND	2.46		1

Project Name:	UNIFIRST PROPERTY IA / VI	**Lab Number:**	L1005229
Project Number:	1-2114-2	**Report Date:**	04/29/10

SAMPLE RESULTS

Lab ID:	L1005229-13	Date Collected:	04/12/10 02:46
Client ID:	IA-13	Date Received:	04/12/10
Sample Location:	WOBURN, MA	Field Prep:	Not Specified
Matrix:	Air		
Analytical Method:	96,APH		
Analytical Date:	04/21/10 06:40		
Analyst:	AR		

Quality Control Information

Sample Type:	10 ml/min Composite
Sample Container Type:	Canister - 6 Liter
Sampling Flow Controller:	Mechanical
Sampling Zone:	Unknown
Sampling Flow Meter RPD of pre & post-sampling calibration check:	<=20%
Were all QA/QC procedures REQUIRED by the method followed?	Yes
Were all performance/acceptance standards for the required procedures achieved?	Yes
Were significant modifications made to the method as specified in Sect 11.1.2?	No

Parameter	Result	Qualifier	Units	RDL	Dilution Factor
Petroleum Hydrocarbons in Air - Mansfield Lab					
1,3-Butadiene	ND		ug/m3	2.0	1
Methyl tert butyl ether	ND		ug/m3	2.0	1
Benzene	ND		ug/m3	2.0	1
Toluene	5.5		ug/m3	2.0	1
Ethylbenzene	ND		ug/m3	2.0	1
p/m-Xylene	ND		ug/m3	4.0	1
o-Xylene	ND		ug/m3	2.0	1
Naphthalene	6.4		ug/m3	2.0	1
C5-C8 Aliphatics, Adjusted	27		ug/m3	12	1
C9-C12 Aliphatics, Adjusted	21	u	ug/m3	14	1
C9-C10 Aromatics	ND		ug/m3	10	1

6/5/10

Project Name: UNIFIRST PROPERTY IA / VI
Project Number: 1-2114-2

Lab Number: L1005229
Report Date: 04/29/10

SAMPLE RESULTS

Lab ID: L1005229-14
Client ID: OA-02
Sample Location: WOBURN, MA
Matrix: Air
Anaytical Method: 48,TO-15-SIM
Analytical Date: 04/21/10 08:16
Analyst: AJ

Date Collected: 04/12/10 01:37
Date Received: 04/12/10
Field Prep: Not Specified

Parameter	ppbV Results	ppbV RDL	ug/m3 Results	ug/m3 RDL	Qualifier	Dilution Factor
Volatile Organics in Air by SIM - Mansfield Lab						
1,1,1-Trichloroethane	0.048	0.020	0.262	0.109		1
1,1,2-Trichloroethane	ND	0.020	ND	0.109		1
1,1-Dichloroethane	ND	0.020	ND	0.081		1
1,1-Dichloroethene	ND	0.020	ND	0.079		1
1,2,4-Trimethylbenzene	0.055	0.020	0.270	0.098		1
1,2-Dibromoethane	ND	0.010	ND	0.077		1
1,2-Dichloroethane	0.020	0.020	ND	0.081		1
1,2-Dichloropropane	ND	0.020	ND	0.092		1
1,3-Butadiene	0.044	0.020	0.097	0.044		1
1,3-Dichlorobenzene	ND	0.020	ND	0.120		1
1,4-Dichlorobenzene	ND	0.020	ND	0.120		1
Benzene	0.253	0.100	0.808	0.319		1
Bromodichloromethane	ND	0.010	ND	0.067		1
Bromoform	ND	0.020	ND	0.206		1
Carbon tetrachloride	0.065	0.020	0.408	0.126		1
Chlorobenzene	ND	0.020	ND	0.092		1
Chloroform	0.030	0.020	0.146	0.098		1
cis-1,2-Dichloroethene	ND	0.020	ND	0.079		1
Ethylbenzene	0.075	0.020	0.325	0.087		1
Methylene chloride	ND	0.500	ND	1.74		1
Methyl tert butyl ether	ND	0.020	ND	0.072		1
Naphthalene	0.106	0.050	0.555	0.260		1
Xylenes, Total	0.269	0.060	1.17	0.260		1
Tetrachloroethene	0.029	0.020	0.196	0.136		1
Toluene	0.632	0.050	2.38	0.188		1

6/15/10

Project Name: UNIFIRST PROPERTY IA / VI
Project Number: 1-2114-2
Lab Number: L1005229
Report Date: 04/29/10

SAMPLE RESULTS

Lab ID: L1005229-14
Client ID: OA-02
Sample Location: WOBURN, MA
Date Collected: 04/12/10 01:37
Date Received: 04/12/10
Field Prep: Not Specified

Parameter	ppbV Results	ppbV RDL	ug/m3 Results	ug/m3 RDL	Qualifier	Dilution Factor
Volatile Organics in Air by SIM - Mansfield Lab						
trans-1,2-Dichloroethene	ND	0.020	ND	0.079		1
trans-1,3-Dichloropropene	ND	0.020	ND	0.091		1
Trichloroethene	0.021	0.020	0.113	0.107		1
Vinyl chloride	ND	0.020	ND	0.051		1
Isopropylbenzene	ND	0.500	ND	2.46		1

Project Name:	UNIFIRST PROPERTY IA / VI	**Lab Number:**	L1005229
Project Number:	1-2114-2	**Report Date:**	04/29/10

SAMPLE RESULTS

Lab ID:	L1005229-14	Date Collected:	04/12/10 01:37
Client ID:	OA-02	Date Received:	04/12/10
Sample Location:	WOBURN, MA	Field Prep:	Not Specified
Matrix:	Air		
Analytical Method:	96,APH		
Analytical Date:	04/21/10 08:16		
Analyst:	AR		

Quality Control Information

Sample Type:	10 ml/min Composite
Sample Container Type:	Canister - 6 Liter
Sampling Flow Controller:	Mechanical
Sampling Zone:	Unknown
Sampling Flow Meter RPD of pre & post-sampling calibration check:	<=20%
Were all QA/QC procedures REQUIRED by the method followed?	Yes
Were all performance/acceptance standards for the required procedures achieved?	Yes
Were significant modifications made to the method as specified in Sect 11.1.2?	No

Parameter	Result	Qualifier	Units	RDL	Dilution Factor
Petroleum Hydrocarbons in Air - Mansfield Lab					
1,3-Butadiene	ND		ug/m3	2.0	1
Methyl tert butyl ether	ND		ug/m3	2.0	1
Benzene	ND		ug/m3	2.0	1
Toluene	2.7		ug/m3	2.0	1
Ethylbenzene	ND		ug/m3	2.0	1
p/m-Xylene	ND		ug/m3	4.0	1
o-Xylene	ND		ug/m3	2.0	1
Naphthalene	ND		ug/m3	2.0	1
C5-C8 Aliphatics, Adjusted	15		ug/m3	12	1
C9-C12 Aliphatics, Adjusted	ND		ug/m3	14	1
C9-C10 Aromatics	ND		ug/m3	10	1

Project Name: UNIFIRST PROPERTY IA / VI
Project Number: 1-2114-2

Lab Number: *L1005229*
Report Date: 04/29/10

SAMPLE RESULTS

Lab ID: L1005229-15
Client ID: IA-DUP01
Sample Location: WOBURN, MA
Matrix: Air
Anaytical Method: 48,TO-15-SIM
Analytical Date: 04/21/10 14:43
Analyst: AJ

Date Collected: 04/12/10 02:56
Date Received: 04/12/10
Field Prep: Not Specified

Parameter	ppbV Results	ppbV RDL	ug/m3 Results	ug/m3 RDL	Qualifier	Dilution Factor
Volatile Organics in Air by SIM - Mansfield Lab						
1,1,1-Trichloroethane	0.120	0.020	0.654	0.109		1
1,1,2-Trichloroethane	ND	0.020	ND	0.109		1
1,1-Dichloroethane	0.021	0.020	0.085	0.081		1
1,1-Dichloroethene	ND	0.020	ND	0.079		1
1,2,4-Trimethylbenzene	0.043	0.020	0.211	0.098		1
1,2-Dibromoethane	ND	0.010	ND	0.077		1
1,2-Dichloroethane	0.090	0.020	0.364	0.081		1
1,2-Dichloropropane	ND	0.020	ND	0.092		1
1,3-Butadiene	0.036	0.020	0.080	0.044		1
1,3-Dichlorobenzene	ND	0.020	ND	0.120		1
1,4-Dichlorobenzene	0.045	0.020	0.270	0.120		1
Benzene	0.234	0.100	0.747	0.319		1
Bromodichloromethane	ND	0.010	ND	0.067		1
Bromoform	ND	0.020	ND	0.206		1
Carbon tetrachloride	0.065	0.020	0.408	0.126		1
Chlorobenzene	ND	0.020	ND	0.092		1
Chloroform	0.025	0.020	0.122	0.098		1
cis-1,2-Dichloroethene	0.045	0.020	0.178	0.079		1
Ethylbenzene	0.091	0.020	0.395	0.087		1
Methylene chloride	1.27	0.500	4.40	1.74		1
Methyl tert butyl ether	ND	0.020	ND	0.072		1
Naphthalene	0.070	0.050	0.367	0.260		1
Xylenes, Total	0.303	0.060	1.31	0.260	J	1
Tetrachloroethene	6.43	0.020	43.6	0.136		1
Toluene	1.13	0.050	4.26	0.188		1

6/5/10

Project Name: UNIFIRST PROPERTY IA / VI
Project Number: 1-2114-2

Lab Number: L1005229
Report Date: 04/29/10

SAMPLE RESULTS

Lab ID: L1005229-15
Client ID: IA-DUP01
Sample Location: WOBURN, MA

Date Collected: 04/12/10 02:56
Date Received: 04/12/10
Field Prep: Not Specified

Parameter	ppbV Results	ppbV RDL	ug/m3 Results	ug/m3 RDL	Qualifier	Dilution Factor
Volatile Organics in Air by SIM - Mansfield Lab						
trans-1,2-Dichloroethene	ND	0.020	ND	0.079		1
trans-1,3-Dichloropropene	ND	0.020	ND	0.091		1
Trichloroethene	0.084	0.020	0.451	0.107		1
Vinyl chloride	ND	0.020	ND	0.051		1
Isopropylbenzene	ND	0.500	ND	2.46		1

Project Name: UNIFIRST PROPERTY IA / VI **Lab Number:** L1005229

Project Number: 1-2114-2 **Report Date:** 04/29/10

SAMPLE RESULTS

Lab ID:	L1005229-15	Date Collected:	04/12/10 02:56
Client ID:	*IA-DUP01*	Date Received:	04/12/10
Sample Location:	WOBURN, MA	Field Prep:	Not Specified
Matrix:	Air		
Analytical Method:	96,APH		
Analytical Date:	04/21/10 14:43		
Analyst:	AR		

Quality Control Information

Sample Type:	10 ml/min Composite
Sample Container Type:	Canister - 6 Liter
Sampling Flow Controller:	Mechanical
Sampling Zone:	Unknown
Sampling Flow Meter RPD of pre & post-sampling calibration check:	<=20%
Were all QA/QC procedures REQUIRED by the method followed?	Yes
Were all performance/acceptance standards for the required procedures achieved?	Yes
Were significant modifications made to the method as specified in Sect 11.1.2?	No

Parameter	Result	Qualifier	Units	RDL	Dilution Factor
Petroleum Hydrocarbons in Air - Mansfield Lab					
1,3-Butadiene	ND		ug/m3	2.0	1
Methyl tert butyl ether	ND		ug/m3	2.0	1
Benzene	ND		ug/m3	2.0	1
Toluene	4.9		ug/m3	2.0	1
Ethylbenzene	ND		ug/m3	2.0	1
p/m-Xylene	ND		ug/m3	4.0	1
o-Xylene	ND		ug/m3	2.0	1
Naphthalene	ND		ug/m3	2.0	1
C5-C8 Aliphatics, Adjusted	20		ug/m3	12	1
C9-C12 Aliphatics, Adjusted	ND		ug/m3	14	1
C9-C10 Aromatics	ND		ug/m3	10	1

Project Name: UNIFIRST PROPERTY IA / VI
Project Number: 1-2114-2

Lab Number: L1005229
Report Date: 04/29/10

SAMPLE RESULTS

Lab ID: L1005229-16
Client ID: IA-06
Sample Location: WOBURN, MA
Matrix: Air
Anaytical Method: 48,TO-15-SIM
Analytical Date: 04/21/10 10:15
Analyst: AJ

Date Collected: 04/12/10 02:30
Date Received: 04/12/10
Field Prep: Not Specified

Parameter	ppbV Results	ppbV RDL	ug/m3 Results	ug/m3 RDL	Qualifier	Dilution Factor
Volatile Organics in Air by SIM - Mansfield Lab						
1,1,1-Trichloroethane	0.078	0.020	0.425	0.109		1
1,1,2-Trichloroethane	ND	0.020	ND	0.109		1
1,1-Dichloroethane	ND	0.020	ND	0.081		1
1,1-Dichloroethene	ND	0.020	ND	0.079		1
1,2,4-Trimethylbenzene	0.212	0.020	1.04	0.098		1
1,2-Dibromoethane	ND	0.010	ND	0.077		1
1,2-Dichloroethane	0.139	0.020	0.562	0.081		1
1,2-Dichloropropane	ND	0.020	ND	0.092		1
1,3-Butadiene	0.030	0.020	0.066	0.044		1
1,3-Dichlorobenzene	ND	0.020	ND	0.120		1
1,4-Dichlorobenzene	0.391	0.020	2.35	0.120		1
Benzene	0.370	0.100	1.18	0.319		1
Bromodichloromethane	ND	0.010	ND	0.067		1
Bromoform	ND	0.020	ND	0.206		1
Carbon tetrachloride	0.072	0.020	0.453	0.126		1
Chlorobenzene	ND	0.020	ND	0.092		1
Chloroform	0.033	0.020	0.161	0.098		1
cis-1,2-Dichloroethene	ND	0.020	ND	0.079		1
Ethylbenzene	0.187	0.020	0.811	0.087		1
Methylene chloride	ND	0.500	ND	1.74		1
Methyl tert butyl ether	0.041	0.020	0.148	0.072		1
Naphthalene	0.666	0.050	3.49	0.260		1
Xylenes, Total	0.713	0.060	3.09	0.260		1
Tetrachloroethene	5.45	0.020	36.9	0.136		1
Toluene	2.40	0.050	9.02	0.188		1

Project Name: UNIFIRST PROPERTY IA / VI
Project Number: 1-2114-2
Lab Number: L1005229
Report Date: 04/29/10

SAMPLE RESULTS

Lab ID: L1005229-16
Client ID: IA-06
Sample Location: WOBURN, MA
Date Collected: 04/12/10 02:30
Date Received: 04/12/10
Field Prep: Not Specified

Parameter	ppbV Results	ppbV RDL	ug/m3 Results	ug/m3 RDL	Qualifier	Dilution Factor
Volatile Organics in Air by SIM - Mansfield Lab						
trans-1,2-Dichloroethene	ND	0.020	ND	0.079		1
trans-1,3-Dichloropropene	ND	0.020	ND	0.091		1
Trichloroethene	0.043	0.020	0.231	0.107		1
Vinyl chloride	ND	0.020	ND	0.051		1
Isopropylbenzene	ND	0.500	ND	2.46		1

Project Name: UNIFIRST PROPERTY IA / VI **Lab Number:** L1005229

Project Number: 1-2114-2 **Report Date:** 04/29/10

SAMPLE RESULTS

Lab ID:	L1005229-16	Date Collected:	04/12/10 02:30
Client ID:	IA-06	Date Received:	04/12/10
Sample Location:	WOBURN, MA	Field Prep:	Not Specified
Matrix:	Air		
Analytical Method:	96,APH		
Analytical Date:	04/21/10 10:15		
Analyst:	AR		

Quality Control Information

Sample Type:	10 ml/min Composite
Sample Container Type:	Canister - 6 Liter
Sampling Flow Controller:	Mechanical
Sampling Zone:	Unknown
Sampling Flow Meter RPD of pre & post-sampling calibration check:	<=20%
Were all QA/QC procedures REQUIRED by the method followed?	Yes
Were all performance/acceptance standards for the required procedures achieved?	Yes
Were significant modifications made to the method as specified in Sect 11.1.2?	No

Parameter	Result	Qualifier	Units	RDL	Dilution Factor
Petroleum Hydrocarbons in Air - Mansfield Lab					
1,3-Butadiene	ND		ug/m3	2.0	1
Methyl tert butyl ether	ND		ug/m3	2.0	1
Benzene	ND		ug/m3	2.0	1
Toluene	10		ug/m3	2.0	1
Ethylbenzene	ND		ug/m3	2.0	1
p/m-Xylene	ND		ug/m3	4.0	1
o-Xylene	ND		ug/m3	2.0	1
Naphthalene	3.4		ug/m3	2.0	1
C5-C8 Aliphatics, Adjusted	51		ug/m3	12	1
C9-C12 Aliphatics, Adjusted	29		ug/m3	14	1
C9-C10 Aromatics	ND		ug/m3	10	1

Project Name: UNIFIRST PROPERTY IA / VI
Project Number: 1-2114-2

Lab Number: L1005229
Report Date: 04/29/10

SAMPLE RESULTS

Lab ID: L1005229-17
Client ID: OA-DUP1
Sample Location: WOBURN, MA
Matrix: Air
Anaytical Method: 48,TO-15-SIM
Analytical Date: 04/21/10 11:32
Analyst: AJ

Date Collected: 04/12/10 01:47
Date Received: 04/12/10
Field Prep: Not Specified

Parameter	ppbV Results	ppbV RDL	ug/m3 Results	ug/m3 RDL	Qualifier	Dilution Factor
Volatile Organics in Air by SIM - Mansfield Lab						
1,1,1-Trichloroethane	0.051	0.020	0.278	0.109		1
1,1,2-Trichloroethane	ND	0.020	ND	0.109		1
1,1-Dichloroethane	ND	0.020	ND	0.081		1
1,1-Dichloroethene	ND	0.020	ND	0.079		1
1,2,4-Trimethylbenzene	0.048	0.020	0.236	0.098		1
1,2-Dibromoethane	ND	0.010	ND	0.077		1
1,2-Dichloroethane	ND	0.020	ND	0.081		1
1,2-Dichloropropane	ND	0.020	ND	0.092		1
1,3-Butadiene	0.033	0.020	0.073	0.044		1
1,3-Dichlorobenzene	ND	0.020	ND	0.120		1
1,4-Dichlorobenzene	ND	0.020	ND	0.120		1
Benzene	0.251	0.100	0.801	0.319		1
Bromodichloromethane	ND	0.010	ND	0.067		1
Bromoform	ND	0.020	ND	0.206		1
Carbon tetrachloride	0.069	0.020	0.434	0.126		1
Chlorobenzene	ND	0.020	ND	0.092		1
Chloroform	0.030	0.020	0.146	0.098		1
cis-1,2-Dichloroethene	ND	0.020	ND	0.079		1
Ethylbenzene	0.069	0.020	0.299	0.087		1
Methylene chloride	ND	0.500	ND	1.74		1
Methyl tert butyl ether	ND	0.020	ND	0.072		1
Naphthalene	ND	0.050	ND	0.260		1
Xylenes, Total	0.235	0.060	1.02	0.260		1
Tetrachloroethene	0.028	0.020	0.190	0.136	4	1
Toluene	0.585	0.050	2.20	0.188		1

6/5/10

Project Name: UNIFIRST PROPERTY IA / VI
Project Number: 1-2114-2
Lab Number: L1005229
Report Date: 04/29/10

SAMPLE RESULTS

Lab ID: L1005229-17
Client ID: OA-DUP1
Sample Location: WOBURN, MA

Date Collected: 04/12/10 01:47
Date Received: 04/12/10
Field Prep: Not Specified

Parameter	ppbV Results	ppbV RDL	ug/m3 Results	ug/m3 RDL	Qualifier	Dilution Factor
Volatile Organics in Air by SIM - Mansfield Lab						
trans-1,2-Dichloroethene	ND	0.020	ND	0.079		1
trans-1,3-Dichloropropene	ND	0.020	ND	0.091		1
Trichloroethene	0.022	0.020	0.118	0.107		1
Vinyl chloride	ND	0.020	ND	0.051		1
Isopropylbenzene	ND	0.500	ND	2.46		1

Project Name: UNIFIRST PROPERTY IA / VI
Project Number: 1-2114-2

Lab Number: L1005229
Report Date: 04/29/10

SAMPLE RESULTS

Lab ID:	L1005229-17	Date Collected:	04/12/10 01:47
Client ID:	OA-DUP1	Date Received:	04/12/10
Sample Location:	WOBURN, MA	Field Prep:	Not Specified
Matrix:	Air		
Analytical Method:	96,APH		
Analytical Date:	04/21/10 11:32		
Analyst:	AR		

Quality Control Information

Sample Type:	10 ml/min Composite
Sample Container Type:	Canister - 6 Liter
Sampling Flow Controller:	Mechanical
Sampling Zone:	Unknown
Sampling Flow Meter RPD of pre & post-sampling calibration check:	<=20%
Were all QA/QC procedures REQUIRED by the method followed?	Yes
Were all performance/acceptance standards for the required procedures achieved?	Yes
Were significant modifications made to the method as specified in Sect 11.1.2?	No

Parameter	Result	Qualifier	Units	RDL	Dilution Factor
Petroleum Hydrocarbons in Air - Mansfield Lab					
1,3-Butadiene	ND		ug/m3	2.0	1
Methyl tert butyl ether	ND		ug/m3	2.0	1
Benzene	ND		ug/m3	2.0	1
Toluene	2.6		ug/m3	2.0	1
Ethylbenzene	ND		ug/m3	2.0	1
p/m-Xylene	ND		ug/m3	4.0	1
o-Xylene	ND		ug/m3	2.0	1
Naphthalene	ND		ug/m3	2.0	1
C5-C8 Aliphatics, Adjusted	14		ug/m3	12	1
C9-C12 Aliphatics, Adjusted	ND		ug/m3	14	1
C9-C10 Aromatics	ND		ug/m3	10	1

Project Name: UNIFIRST PROPERTY IA / VI
Project Number: 1-2114-2

Lab Number: L1005229
Report Date: 04/29/10

SAMPLE RESULTS

Lab ID: L1005229-18
Client ID: IA-15
Sample Location: WOBURN, MA
Matrix: Air
Anaytical Method: 48,TO-15-SIM
Analytical Date: 04/21/10 12:10
Analyst: AJ

Date Collected: 04/12/10 02:09
Date Received: 04/12/10
Field Prep: Not Specified

Parameter	ppbV Results	ppbV RDL	ug/m3 Results	ug/m3 RDL	Qualifier	Dilution Factor
Volatile Organics in Air by SIM - Mansfield Lab						
1,1,1-Trichloroethane	0.308	0.020	1.68	0.109		1
1,1,2-Trichloroethane	ND	0.020	ND	0.109		1
1,1-Dichloroethane	0.166	0.020	0.671	0.081		1
1,1-Dichloroethene	0.033	0.020	0.131	0.079		1
1,2,4-Trimethylbenzene	0.043	0.020	0.211	0.098		1
1,2-Dibromoethane	ND	0.010	ND	0.077		1
1,2-Dichloroethane	0.023	0.020	0.093	0.081		1
1,2-Dichloropropane	ND	0.020	ND	0.092		1
1,3-Butadiene	0.021	0.020	0.046	0.044		1
1,3-Dichlorobenzene	ND	0.020	ND	0.120		1
1,4-Dichlorobenzene	0.052	0.020	0.312	0.120		1
Benzene	0.208	0.100	0.664	0.319		1
Bromodichloromethane	ND	0.010	ND	0.067		1
Bromoform	ND	0.020	ND	0.206		1
Carbon tetrachloride	0.067	0.020	0.421	0.126		1
Chlorobenzene	ND	0.020	ND	0.092		1
Chloroform	0.047	0.020	0.229	0.098		1
cis-1,2-Dichloroethene	0.144	0.020	0.570	0.079		1
Ethylbenzene	0.223	0.020	0.968	0.087		1
Methylene chloride	ND	0.500	ND	1.74		1
Methyl tert butyl ether	0.020	0.020	0.072	0.072		1
Naphthalene	0.095	0.050	0.498	0.260		1
Xylenes, Total	0.768	0.060	3.33	0.260		1
Tetrachloroethene	1.78	0.020	12.0	0.136		1
Toluene	1.26	0.050	4.74	0.188		1

Project Name: UNIFIRST PROPERTY IA / VI
Project Number: 1-2114-2
Lab Number: L1005229
Report Date: 04/29/10

SAMPLE RESULTS

Lab ID: L1005229-18
Client ID: IA-15
Sample Location: WOBURN, MA
Date Collected: 04/12/10 02:09
Date Received: 04/12/10
Field Prep: Not Specified

Parameter	ppbV Results	ppbV RDL	ug/m3 Results	ug/m3 RDL	Qualifier	Dilution Factor
Volatile Organics in Air by SIM - Mansfield Lab						
trans-1,2-Dichloroethene	ND	0.020	ND	0.079		1
trans-1,3-Dichloropropene	ND	0.020	ND	0.091		1
Trichloroethene	0.042	0.020	0.226	0.107		1
Vinyl chloride	ND	0.020	ND	0.051		1
Isopropylbenzene	ND	0.500	ND	2.46		1

Project Name: UNIFIRST PROPERTY IA / VI
Project Number: 1-2114-2

Lab Number: L1005229
Report Date: 04/29/10

SAMPLE RESULTS

Lab ID:	L1005229-18	Date Collected:	04/12/10 02:09
Client ID:	IA-15	Date Received:	04/12/10
Sample Location:	WOBURN, MA	Field Prep:	Not Specified
Matrix:	Air		
Analytical Method:	96,APH		
Analytical Date:	04/21/10 12:10		
Analyst:	AR		

Quality Control Information

Sample Type:	10 ml/min Composite
Sample Container Type:	Canister - 6 Liter
Sampling Flow Controller:	Mechanical
Sampling Zone:	Unknown
Sampling Flow Meter RPD of pre & post-sampling calibration check:	<=20%
Were all QA/QC procedures REQUIRED by the method followed?	Yes
Were all performance/acceptance standards for the required procedures achieved?	Yes
Were significant modifications made to the method as specified in Sect 11.1.2?	No

Parameter	Result	Qualifier	Units	RDL	Dilution Factor
Petroleum Hydrocarbons in Air - Mansfield Lab					
1,3-Butadiene	ND		ug/m3	2.0	1
Methyl tert butyl ether	ND		ug/m3	2.0	1
Benzene	ND		ug/m3	2.0	1
Toluene	5.4		ug/m3	2.0	1
Ethylbenzene	ND		ug/m3	2.0	1
p/m-Xylene	ND		ug/m3	4.0	1
o-Xylene	ND		ug/m3	2.0	1
Naphthalene	ND		ug/m3	2.0	1
C5-C8 Aliphatics, Adjusted	27		ug/m3	12	1
C9-C12 Aliphatics, Adjusted	ND		ug/m3	14	1
C9-C10 Aromatics	ND		ug/m3	10	1

Project Name: UNIFIRST PROPERTY IA / VI
Project Number: 1-2114-2
Lab Number: L1005229
Report Date: 04/29/10

SAMPLE RESULTS

Lab ID: L1005229-19
Client ID: IA-01
Sample Location: WOBURN, MA
Matrix: Air
Anaytical Method: 48,TO-15-SIM
Analytical Date: 04/21/10 12:48
Analyst: AJ

Date Collected: 04/12/10 00:39
Date Received: 04/12/10
Field Prep: Not Specified

Parameter	ppbV Results	ppbV RDL	ug/m3 Results	ug/m3 RDL	Qualifier	Dilution Factor
Volatile Organics in Air by SIM - Mansfield Lab						
1,1,1-Trichloroethane	0.046	0.020	0.251	0.109		1
1,1,2-Trichloroethane	ND	0.020	ND	0.109		1
1,1-Dichloroethane	ND	0.020	ND	0.081		1
1,1-Dichloroethene	ND	0.020	ND	0.079		1
1,2,4-Trimethylbenzene	0.249	0.020	1.22	0.098		1
1,2-Dibromoethane	ND	0.010	ND	0.077		1
1,2-Dichloroethane	0.137	0.020	0.554	0.081		1
1,2-Dichloropropane	ND	0.020	ND	0.092		1
1,3-Butadiene	ND	0.020	ND	0.044		1
1,3-Dichlorobenzene	ND	0.020	ND	0.120		1
1,4-Dichlorobenzene	5.98	0.020	36.0	0.120		1
Benzene	0.228	0.100	0.728	0.319		1
Bromodichloromethane	ND	0.010	ND	0.067		1
Bromoform	ND	0.020	ND	0.206		1
Carbon tetrachloride	0.073	0.020	0.459	0.126		1
Chlorobenzene	ND	0.020	ND	0.092		1
Chloroform	0.044	0.020	0.215	0.098		1
cis-1,2-Dichloroethene	ND	0.020	ND	0.079		1
Ethylbenzene	0.198	0.020	0.859	0.087		1
Methylene chloride	1.04	0.500	3.60	1.74		1
Methyl tert butyl ether	0.110	0.020	0.396	0.072		1
Naphthalene	0.440	0.050	2.30	0.260		1
Xylenes, Total	0.690	0.060	2.99	0.260		1
Tetrachloroethene	0.644	0.020	4.36	0.136		1
Toluene	1.56	0.050	5.86	0.188		1

Project Name: UNIFIRST PROPERTY IA / VI **Lab Number:** L1005229

Project Number: 1-2114-2 **Report Date:** 04/29/10

SAMPLE RESULTS

Lab ID: L1005229-19 Date Collected: 04/12/10 00:39

Client ID: IA-01 Date Received: 04/12/10

Sample Location: WOBURN, MA Field Prep: Not Specified

Parameter	ppbV Results	ppbV RDL	ug/m3 Results	ug/m3 RDL	Qualifier	Dilution Factor
Volatile Organics in Air by SIM - Mansfield Lab						
trans-1,2-Dichloroethene	ND	0.020	ND	0.079		1
trans-1,3-Dichloropropene	ND	0.020	ND	0.091		1
Trichloroethene	ND	0.020	ND	0.107		1
Vinyl chloride	ND	0.020	ND	0.051		1
Isopropylbenzene	ND	0.500	ND	2.46		1

Project Name: UNIFIRST PROPERTY IA / VI **Lab Number:** L1005229

Project Number: 1-2114-2 **Report Date:** 04/29/10

SAMPLE RESULTS

Lab ID:	L1005229-19	Date Collected:	04/12/10 00:39
Client ID:	IA-01	Date Received:	04/12/10
Sample Location:	WOBURN, MA	Field Prep:	Not Specified
Matrix:	Air		
Analytical Method:	96,APH		
Analytical Date:	04/21/10 12:48		
Analyst:	AR		

Quality Control Information

Sample Type:	10 ml/min Composite
Sample Container Type:	Canister - 6 Liter
Sampling Flow Controller:	Mechanical
Sampling Zone:	Unknown
Sampling Flow Meter RPD of pre & post-sampling calibration check:	>20%
Were all QA/QC procedures REQUIRED by the method followed?	Yes
Were all performance/acceptance standards for the required procedures achieved?	Yes
Were significant modifications made to the method as specified in Sect 11.1.2?	No

Parameter	Result	Qualifier	Units	RDL	Dilution Factor
Petroleum Hydrocarbons in Air - Mansfield Lab					
1,3-Butadiene	ND		ug/m3	2.0	1
Methyl tert butyl ether	ND		ug/m3	2.0	1
Benzene	ND		ug/m3	2.0	1
Toluene	6.8		ug/m3	2.0	1
Ethylbenzene	ND		ug/m3	2.0	1
p/m-Xylene	ND		ug/m3	4.0	1
o-Xylene	ND		ug/m3	2.0	1
Naphthalene	2.2		ug/m3	2.0	1
C5-C8 Aliphatics, Adjusted	58		ug/m3	12	1
C9-C12 Aliphatics, Adjusted	87		ug/m3	14	1
C9-C10 Aromatics	ND		ug/m3	10	1

Project Name: UNIFIRST PROPERTY IA / VI
Project Number: 1-2114-2
Lab Number: L1005229
Report Date: 04/29/10

SAMPLE RESULTS

Lab ID: L1005229-20
Client ID: IA-13A
Sample Location: WOBURN, MA
Matrix: Air
Anaytical Method: 48,TO-15-SIM
Analytical Date: 04/21/10 13:26
Analyst: AJ

Date Collected: 04/12/10 02:46
Date Received: 04/12/10
Field Prep: Not Specified

Parameter	ppbV Results	ppbV RDL	ug/m3 Results	ug/m3 RDL	Qualifier	Dilution Factor
Volatile Organics in Air by SIM - Mansfield Lab						
1,1,1-Trichloroethane	0.131	0.020	0.714	0.109		1
1,1,2-Trichloroethane	ND	0.020	ND	0.109		1
1,1-Dichloroethane	0.022	0.020	0.089	0.081		1
1,1-Dichloroethene	ND	0.020	ND	0.079		1
1,2,4-Trimethylbenzene	0.161	0.020	0.791	0.098		1
1,2-Dibromoethane	ND	0.010	ND	0.077		1
1,2-Dichloroethane	0.100	0.020	0.404	0.081		1
1,2-Dichloropropane	ND	0.020	ND	0.092		1
1,3-Butadiene	0.032	0.020	0.071	0.044		1
1,3-Dichlorobenzene	ND	0.020	ND	0.120		1
1,4-Dichlorobenzene	0.304	0.020	1.83	0.120		1
Benzene	0.246	0.100	0.785	0.319		1
Bromodichloromethane	ND	0.010	ND	0.067		1
Bromoform	ND	0.020	ND	0.206		1
Carbon tetrachloride	0.065	0.020	0.408	0.126		1
Chlorobenzene	ND	0.020	ND	0.092		1
Chloroform	0.027	0.020	0.132	0.098		1
cis-1,2-Dichloroethene	0.050	0.020	0.198	0.079		1
Ethylbenzene	0.136	0.020	0.590	0.087		1
Methylene chloride	ND	0.500	ND	1.74		1
Methyl tert butyl ether	0.020	0.020	0.072	0.072		1
Naphthalene	2.98	0.050	15.6	0.260		1
Xylenes, Total	0.502	0.060	2.18	0.260		1
Tetrachloroethene	8.88	0.020	60.2	0.136		1
Toluene	1.27	0.050	4.80	0.188		1

Project Name: UNIFIRST PROPERTY IA / VI
Project Number: 1-2114-2
Lab Number: L1005229
Report Date: 04/29/10

SAMPLE RESULTS

Lab ID: L1005229-20
Client ID: IA-13A
Sample Location: WOBURN, MA
Date Collected: 04/12/10 02:46
Date Received: 04/12/10
Field Prep: Not Specified

Parameter	ppbV Results	ppbV RDL	ug/m3 Results	ug/m3 RDL	Qualifier	Dilution Factor
Volatile Organics in Air by SIM - Mansfield Lab						
trans-1,2-Dichloroethene	ND	0.020	ND	0.079		1
trans-1,3-Dichloropropene	ND	0.020	ND	0.091		1
Trichloroethene	0.095	0.020	0.510	0.107		1
Vinyl chloride	ND	0.020	ND	0.051		1
Isopropylbenzene	ND	0.500	ND	2.46		1

Project Name: *UNIFIRST PROPERTY IA / VI* **Lab Number:** L1005229

Project Number: 1-2114-2 **Report Date:** 04/29/10

SAMPLE RESULTS

Lab ID:	L1005229-20	Date Collected:	04/12/10 02:46
Client ID:	IA-13A	Date Received:	04/12/10
Sample Location:	WOBURN, MA	Field Prep:	Not Specified
Matrix:	Air		
Analytical Method:	96,APH		
Analytical Date:	04/21/10 13:26		
Analyst:	AR		

Quality Control Information

Sample Type:	10 ml/min Composite
Sample Container Type:	Canister - 6 Liter
Sampling Flow Controller:	Mechanical
Sampling Zone:	Unknown
Sampling Flow Meter RPD of pre & post-sampling calibration check:	<=20%
Were all QA/QC procedures REQUIRED by the method followed?	Yes
Were all performance/acceptance standards for the required procedures achieved?	Yes
Were significant modifications made to the method as specified in Sect 11.1.2?	No

Parameter	Result	Qualifier	Units	RDL	Dilution Factor
Petroleum Hydrocarbons in Air - Mansfield Lab					
1,3-Butadiene	ND		ug/m3	2.0	1
Methyl tert butyl ether	ND		ug/m3	2.0	1
Benzene	ND		ug/m3	2.0	1
Toluene	5.4		ug/m3	2.0	1
Ethylbenzene	ND		ug/m3	2.0	1
p/m-Xylene	ND		ug/m3	4.0	1
o-Xylene	ND		ug/m3	2.0	1
Naphthalene	15		ug/m3	2.0	1
C5-C8 Aliphatics, Adjusted	32		ug/m3	12	1
C9-C12 Aliphatics, Adjusted	18	u	ug/m3	14	1
C9-C10 Aromatics	ND		ug/m3	10	1

Project Name: UNIFIRST PROPERTY IA / VI
Project Number: 1-2114-2

Lab Number: L1005229
Report Date: 04/29/10

SAMPLE RESULTS

Lab ID: L1005229-21
Client ID: IA-10
Sample Location: WOBURN, MA
Matrix: Air
Anaytical Method: 48,TO-15-SIM
Analytical Date: 04/21/10 14:05
Analyst: AJ

Date Collected: 04/12/10 02:27
Date Received: 04/12/10
Field Prep: Not Specified

Parameter	ppbV Results	ppbV RDL	ug/m3 Results	ug/m3 RDL	Qualifier	Dilution Factor
Volatile Organics in Air by SIM - Mansfield Lab						
1,1,1-Trichloroethane	0.068	0.020	0.371	0.109		1
1,1,2-Trichloroethane	ND	0.020	ND	0.109		1
1,1-Dichloroethane	ND	0.020	ND	0.081		1
1,1-Dichloroethene	ND	0.020	ND	0.079		1
1,2,4-Trimethylbenzene	0.225	0.020	1.10	0.098		1
1,2-Dibromoethane	ND	0.010	ND	0.077		1
1,2-Dichloroethane	0.206	0.020	0.833	0.081		1
1,2-Dichloropropane	ND	0.020	ND	0.092		1
1,3-Butadiene	ND	0.020	ND	0.044		1
1,3-Dichlorobenzene	ND	0.020	ND	0.120		1
1,4-Dichlorobenzene	1.01	0.020	6.08	0.120		1
Benzene	0.270	0.100	0.862	0.319		1
Bromodichloromethane	ND	0.010	ND	0.067		1
Bromoform	ND	0.020	ND	0.206		1
Carbon tetrachloride	0.070	0.020	0.440	0.126		1
Chlorobenzene	ND	0.020	ND	0.092		1
Chloroform	0.029	0.020	0.141	0.098		1
cis-1,2-Dichloroethene	0.024	0.020	0.095	0.079		1
Ethylbenzene	0.185	0.020	0.803	0.087		1
Methylene chloride	1.10	0.500	3.82	1.74		1
Methyl tert butyl ether	0.069	0.020	0.248	0.072		1
Naphthalene	0.822	0.050	4.30	0.260		1
Xylenes, Total	0.685	0.060	2.97	0.260		1
Tetrachloroethene	4.13	0.020	28.0	0.136		1
Toluene	3.15	0.050	11.9	0.188		1

Project Name: UNIFIRST PROPERTY IA / VI
Project Number: 1-2114-2

Lab Number: L1005229
Report Date: 04/29/10

SAMPLE RESULTS

Lab ID: L1005229-21
Client ID: IA-10
Sample Location: WOBURN, MA

Date Collected: 04/12/10 02:27
Date Received: 04/12/10
Field Prep: Not Specified

Parameter	ppbV Results	ppbV RDL	ug/m3 Results	ug/m3 RDL	Qualifier	Dilution Factor
Volatile Organics in Air by SIM - Mansfield Lab						
trans-1,2-Dichloroethene	ND	0.020	ND	0.079		1
trans-1,3-Dichloropropene	ND	0.020	ND	0.091		1
Trichloroethene	0.041	0.020	0.220	0.107		1
Vinyl chloride	ND	0.020	ND	0.051		1
Isopropylbenzene	ND	0.500	ND	2.46		1

Project Name: UNIFIRST PROPERTY IA / VI **Lab Number:** L1005229

Project Number: 1-2114-2 **Report Date:** 04/29/10

SAMPLE RESULTS

Lab ID:	L1005229-21	Date Collected:	04/12/10 02:27
Client ID:	IA-10	Date Received:	04/12/10
Sample Location:	WOBURN, MA	Field Prep:	Not Specified
Matrix:	Air		
Analytical Method:	96,APH		
Analytical Date:	04/21/10 14:05		
Analyst:	AR		

Quality Control Information

Sample Type:	10 ml/min Composite
Sample Container Type:	Canister - 6 Liter
Sampling Flow Controller:	Mechanical
Sampling Zone:	Unknown
Sampling Flow Meter RPD of pre & post-sampling calibration check:	<=20%
Were all QA/QC procedures REQUIRED by the method followed?	Yes
Were all performance/acceptance standards for the required procedures achieved?	Yes
Were significant modifications made to the method as specified in Sect 11.1.2?	No

Parameter	Result	Qualifier	Units	RDL	Dilution Factor
Petroleum Hydrocarbons in Air - Mansfield Lab					
1,3-Butadiene	ND		ug/m3	2.0	1
Methyl tert butyl ether	ND		ug/m3	2.0	1
Benzene	ND		ug/m3	2.0	1
Toluene	14		ug/m3	2.0	1
Ethylbenzene	ND		ug/m3	2.0	1
p/m-Xylene	ND		ug/m3	4.0	1
o-Xylene	ND		ug/m3	2.0	1
Naphthalene	4.2		ug/m3	2.0	1
C5-C8 Aliphatics, Adjusted	52		ug/m3	12	1
C9-C12 Aliphatics, Adjusted	39		ug/m3	14	1
C9-C10 Aromatics	ND		ug/m3	10	1

Project Name: UNIFIRST PROPERTY IA / VI
Project Number: 1-2114-2

Lab Number: L1005229
Report Date: 04/29/10

SAMPLE RESULTS

Lab ID: L1005229-22
Client ID: IA-03
Sample Location: WOBURN, MA
Matrix: Air
Anaytical Method: 48,TO-15-SIM
Analytical Date: 04/21/10 23:28
Analyst: AJ

Date Collected: 04/12/10 02:01
Date Received: 04/12/10
Field Prep: Not Specified

Parameter	ppbV Results	ppbV RDL	ug/m3 Results	ug/m3 RDL	Qualifier	Dilution Factor
Volatile Organics in Air by SIM - Mansfield Lab						
1,1,1-Trichloroethane	0.054	0.020	0.294	0.109		1
1,1,2-Trichloroethane	ND	0.020	ND	0.109		1
1,1-Dichloroethane	ND	0.020	ND	0.081		1
1,1-Dichloroethene	ND	0.020	ND	0.079		1
1,2,4-Trimethylbenzene	0.230	0.020	1.13	0.098		1
1,2-Dibromoethane	ND	0.010	ND	0.077		1
1,2-Dichloroethane	0.161	0.020	0.651	0.081		1
1,2-Dichloropropane	ND	0.020	ND	0.092		1
1,3-Butadiene	0.020	0.020	0.044	0.044		1
1,3-Dichlorobenzene	ND	0.020	ND	0.120		1
1,4-Dichlorobenzene	2.63	0.020	15.8	0.120		1
Benzene	0.270	0.100	0.862	0.319		1
Bromodichloromethane	ND	0.010	ND	0.067		1
Bromoform	ND	0.020	ND	0.206		1
Carbon tetrachloride	0.065	0.020	0.408	0.126		1
Chlorobenzene	ND	0.020	ND	0.092		1
Chloroform	0.036	0.020	0.176	0.098		1
cis-1,2-Dichloroethene	ND	0.020	ND	0.079		1
Ethylbenzene	0.205	0.020	0.889	0.087		1
Methylene chloride	0.785	0.500	2.72	1.74		1
Methyl tert butyl ether	0.123	0.020	0.443	0.072		1
Naphthalene	0.401	0.050	2.10	0.260		1
Xylenes, Total	0.742	0.060	3.22	0.260		1
Tetrachloroethene	1.29	0.020	8.75	0.136		1
Toluene	2.33	0.050	8.77	0.188		1

Project Name: UNIFIRST PROPERTY IA / VI
Project Number: 1-2114-2

Lab Number: L1005229
Report Date: 04/29/10

SAMPLE RESULTS

Lab ID: L1005229-22
Client ID: IA-03
Sample Location: WOBURN, MA

Date Collected: 04/12/10 02:01
Date Received: 04/12/10
Field Prep: Not Specified

Parameter	ppbV Results	ppbV RDL	ug/m3 Results	ug/m3 RDL	Qualifier	Dilution Factor
Volatile Organics in Air by SIM - Mansfield Lab						
trans-1,2-Dichloroethene	ND	0.020	ND	0.079		1
trans-1,3-Dichloropropene	~~ND~~	0.020	~~ND~~	0.091	UJ	1
Trichloroethene	0.021	0.020	0.113	0.107		1
Vinyl chloride	ND	0.020	ND	0.051		1
Isopropylbenzene	ND	0.500	ND	2.46		1

Project Name:	UNIFIRST PROPERTY IA / VI	**Lab Number:**	L1005229
Project Number:	1-2114-2	**Report Date:**	04/29/10

SAMPLE RESULTS

Lab ID:	L1005229-22	Date Collected:	04/12/10 02:01
Client ID:	IA-03	Date Received:	04/12/10
Sample Location:	WOBURN, MA	Field Prep:	Not Specified
Matrix:	Air		
Analytical Method:	96,APH		
Analytical Date:	04/21/10 23:28		
Analyst:	RY		

Quality Control Information

Sample Type:	10 ml/min Composite
Sample Container Type:	Canister - 6 Liter
Sampling Flow Controller:	Mechanical
Sampling Zone:	Unknown
Sampling Flow Meter RPD of pre & post-sampling calibration check:	<=20%
Were all QA/QC procedures REQUIRED by the method followed?	Yes
Were all performance/acceptance standards for the required procedures achieved?	Yes
Were significant modifications made to the method as specified in Sect 11.1.2?	No

Parameter	Result	Qualifier	Units	RDL	Dilution Factor
Petroleum Hydrocarbons in Air - Mansfield Lab					
1,3-Butadiene	ND		ug/m3	2.0	1
Methyl tert butyl ether	ND		ug/m3	2.0	1
Benzene	ND		ug/m3	2.0	1
Toluene	10		ug/m3	2.0	1
Ethylbenzene	ND		ug/m3	2.0	1
p/m-Xylene	ND		ug/m3	4.0	1
o-Xylene	ND		ug/m3	2.0	1
Naphthalene	2.0		ug/m3	2.0	1
C5-C8 Aliphatics, Adjusted	61		ug/m3	12	1
C9-C12 Aliphatics, Adjusted	61		ug/m3	14	1
C9-C10 Aromatics	ND		ug/m3	10	1

Project Name: UNIFIRST PROPERTY IA / VI **Lab Number:** L1005229

Project Number: 1-2114-2 **Report Date:** 04/29/10

SAMPLE RESULTS

Lab ID: L1005229-23
Client ID: IA-07
Sample Location: WOBURN, MA
Matrix: Air
Anaytical Method: 48,TO-15-SIM
Analytical Date: 04/22/10 00:06
Analyst: AJ

Date Collected: 04/12/10 02:36
Date Received: 04/12/10
Field Prep: Not Specified

Parameter	ppbV Results	ppbV RDL	ug/m3 Results	ug/m3 RDL	Qualifier	Dilution Factor
Volatile Organics in Air by SIM - Mansfield Lab						
1,1,1-Trichloroethane	0.090	0.020	0.491	0.109		1
1,1,2-Trichloroethane	ND	0.020	ND	0.109		1
1,1-Dichloroethane	ND	0.020	ND	0.081		1
1,1-Dichloroethene	ND	0.020	ND	0.079		1
1,2,4-Trimethylbenzene	0.195	0.020	0.958	0.098		1
1,2-Dibromoethane	ND	0.010	ND	0.077		1
1,2-Dichloroethane	0.164	0.020	0.663	0.081		1
1,2-Dichloropropane	ND	0.020	ND	0.092		1
1,3-Butadiene	0.028	0.020	0.062	0.044		1
1,3-Dichlorobenzene	ND	0.020	ND	0.120		1
1,4-Dichlorobenzene	0.625	0.020	3.75	0.120		1
Benzene	0.311	0.100	0.993	0.319		1
Bromodichloromethane	ND	0.010	ND	0.067		1
Bromoform	ND	0.020	ND	0.206		1
Carbon tetrachloride	0.067	0.020	0.421	0.126		1
Chlorobenzene	ND	0.020	ND	0.092		1
Chloroform	0.031	0.020	0.151	0.098		1
cis-1,2-Dichloroethene	0.028	0.020	0.111	0.079		1
Ethylbenzene	0.189	0.020	0.820	0.087		1
Methylene chloride	0.502	0.500	1.74	1.74		1
Methyl tert butyl ether	0.055	0.020	0.198	0.072		1
Naphthalene	0.821	0.050	4.30	0.260		1
Xylenes, Total	0.706	0.060	3.06	0.260		1
Tetrachloroethene	4.41	0.020	29.9	0.136		1
Toluene	2.85	0.050	10.7	0.188		1

Project Name: UNIFIRST PROPERTY IA / VI
Project Number: 1-2114-2

Lab Number: L1005229
Report Date: 04/29/10

SAMPLE RESULTS

Lab ID: L1005229-23
Client ID: IA-07
Sample Location: WOBURN, MA

Date Collected: 04/12/10 02:36
Date Received: 04/12/10
Field Prep: Not Specified

Parameter	ppbV Results	ppbV RDL	ug/m3 Results	ug/m3 RDL	Qualifier	Dilution Factor
Volatile Organics in Air by SIM - Mansfield Lab						
trans-1,2-Dichloroethene	ND	0.020	ND	0.079		1
trans-1,3-Dichloropropene	~~ND~~	0.020	~~ND~~	0.091	UJ	1
Trichloroethene	0.060	0.020	0.322	0.107		1
Vinyl chloride	ND	0.020	ND	0.051		1
Isopropylbenzene	ND	0.500	ND	2.46		1

Project Name:	UNIFIRST PROPERTY IA / VI	**Lab Number:**	L1005229
Project Number:	1-2114-2	**Report Date:**	04/29/10

SAMPLE RESULTS

Lab ID:	L1005229-23	Date Collected:	04/12/10 02:36
Client ID:	IA-07	Date Received:	04/12/10
Sample Location:	WOBURN, MA	Field Prep:	Not Specified
Matrix:	Air		
Analytical Method:	96,APH		
Analytical Date:	04/22/10 00:06		
Analyst:	RY		

Quality Control Information

Sample Type:	10 ml/min Composite
Sample Container Type:	Canister - 6 Liter
Sampling Flow Controller:	Mechanical
Sampling Zone:	Unknown
Sampling Flow Meter RPD of pre & post-sampling calibration check:	<=20%
Were all QA/QC procedures REQUIRED by the method followed?	Yes
Were all performance/acceptance standards for the required procedures achieved?	Yes
Were significant modifications made to the method as specified in Sect 11.1.2?	No

Parameter	Result	Qualifier	Units	RDL	Dilution Factor
Petroleum Hydrocarbons in Air - Mansfield Lab					
1,3-Butadiene	ND		ug/m3	2.0	1
Methyl tert butyl ether	ND		ug/m3	2.0	1
Benzene	ND		ug/m3	2.0	1
Toluene	12		ug/m3	2.0	1
Ethylbenzene	ND		ug/m3	2.0	1
p/m-Xylene	ND		ug/m3	4.0	1
o-Xylene	ND		ug/m3	2.0	1
Naphthalene	4.1		ug/m3	2.0	1
C5-C8 Aliphatics, Adjusted	46		ug/m3	12	1
C9-C12 Aliphatics, Adjusted	32		ug/m3	14	1
C9-C10 Aromatics	ND		ug/m3	10	1

Project Name: UNIFIRST PROPERTY IA / VI
Project Number: 1-2114-2

Lab Number: L1005229
Report Date: 04/29/10

SAMPLE RESULTS

Lab ID: L1005229-24
Client ID: IA-02
Sample Location: WOBURN, MA
Matrix: Air
Anaytical Method: 48,TO-15-SIM
Analytical Date: 04/22/10 00:45
Analyst: AJ

Date Collected: 04/12/10 02:22
Date Received: 04/12/10
Field Prep: Not Specified

Parameter	ppbV Results	ppbV RDL	ug/m3 Results	ug/m3 RDL	Qualifier	Dilution Factor
Volatile Organics in Air by SIM - Mansfield Lab						
1,1,1-Trichloroethane	0.055	0.020	0.300	0.109		1
1,1,2-Trichloroethane	ND	0.020	ND	0.109		1
1,1-Dichloroethane	ND	0.020	ND	0.081		1
1,1-Dichloroethene	ND	0.020	ND	0.079		1
1,2,4-Trimethylbenzene	0.227	0.020	1.12	0.098		1
1,2-Dibromoethane	ND	0.010	ND	0.077		1
1,2-Dichloroethane	0.150	0.020	0.607	0.081		1
1,2-Dichloropropane	ND	0.020	ND	0.092		1
1,3-Butadiene	0.024	0.020	0.053	0.044		1
1,3-Dichlorobenzene	ND	0.020	ND	0.120		1
1,4-Dichlorobenzene	6.68	0.020	40.1	0.120		1
Benzene	0.282	0.100	0.900	0.319		1
Bromodichloromethane	ND	0.010	ND	0.067		1
Bromoform	ND	0.020	ND	0.206		1
Carbon tetrachloride	0.077	0.020	0.484	0.126		1
Chlorobenzene	ND	0.020	ND	0.092		1
Chloroform	0.054	0.020	0.263	0.098		1
cis-1,2-Dichloroethene	ND	0.020	ND	0.079		1
Ethylbenzene	0.198	0.020	0.859	0.087		1
Methylene chloride	1.06	0.500	3.68	1.74		1
Methyl tert butyl ether	0.125	0.020	0.450	0.072		1
Naphthalene	0.419	0.050	2.19	0.260		1
Xylenes, Total	0.685	0.060	2.97	0.260		1
Tetrachloroethene	0.641	0.020	4.34	0.136		1
Toluene	1.64	0.050	6.18	0.188		1

Project Name: UNIFIRST PROPERTY IA / VI
Project Number: 1-2114-2

Lab Number: L1005229
Report Date: 04/29/10

SAMPLE RESULTS

Lab ID: L1005229-24
Client ID: IA-02
Sample Location: WOBURN, MA

Date Collected: 04/12/10 02:22
Date Received: 04/12/10
Field Prep: Not Specified

Parameter	ppbV Results	ppbV RDL	ug/m3 Results	ug/m3 RDL	Qualifier	Dilution Factor
Volatile Organics in Air by SIM - Mansfield Lab						
trans-1,2-Dichloroethene	ND	0.020	ND	0.079		1
trans-1,3-Dichloropropene	~~ND~~	0.020	~~ND~~	0.091	UJ	1
Trichloroethene	ND	0.020	ND	0.107		1
Vinyl chloride	ND	0.020	ND	0.051		1
Isopropylbenzene	ND	0.500	ND	2.46		1

6/5/10

Project Name: UNIFIRST PROPERTY IA / VI
Project Number: 1-2114-2

Lab Number: L1005229
Report Date: 04/29/10

SAMPLE RESULTS

Lab ID:	L1005229-24	Date Collected:	04/12/10 02:22
Client ID:	IA-02	Date Received:	04/12/10
Sample Location:	WOBURN, MA	Field Prep:	Not Specified
Matrix:	Air		
Analytical Method:	96,APH		
Analytical Date:	04/22/10 00:45		
Analyst:	RY		

Quality Control Information

Sample Type:	10 ml/min Composite
Sample Container Type:	Canister - 6 Liter
Sampling Flow Controller:	Mechanical
Sampling Zone:	Unknown
Sampling Flow Meter RPD of pre & post-sampling calibration check:	<=20%
Were all QA/QC procedures REQUIRED by the method followed?	Yes
Were all performance/acceptance standards for the required procedures achieved?	Yes
Were significant modifications made to the method as specified in Sect 11.1.2?	No

Parameter	Result	Qualifier	Units	RDL	Dilution Factor
Petroleum Hydrocarbons in Air - Mansfield Lab					
1,3-Butadiene	ND		ug/m3	2.0	1
Methyl tert butyl ether	ND		ug/m3	2.0	1
Benzene	ND		ug/m3	2.0	1
Toluene	7.7		ug/m3	2.0	1
Ethylbenzene	ND		ug/m3	2.0	1
p/m-Xylene	ND		ug/m3	4.0	1
o-Xylene	ND		ug/m3	2.0	1
Naphthalene	2.2		ug/m3	2.0	1
C5-C8 Aliphatics, Adjusted	66		ug/m3	12	1
C9-C12 Aliphatics, Adjusted	83		ug/m3	14	1
C9-C10 Aromatics	ND		ug/m3	10	1

Project Name: UNIFIRST PROPERTY IA / VI
Project Number: 1-2114-2

Lab Number: L1005229
Report Date: 04/29/10

SAMPLE RESULTS

Lab ID: L1005229-25
Client ID: SV-04
Sample Location: WOBURN, MA
Matrix: Soil_Vapor
Anaytical Method: 48,TO-15-SIM
Analytical Date: 04/22/10 02:39
Analyst: AJ

Date Collected: 04/12/10 05:07
Date Received: 04/12/10
Field Prep: Not Specified

Parameter	ppbV Results	ppbV RDL	ug/m3 Results	ug/m3 RDL	Qualifier	Dilution Factor
Volatile Organics in Air by SIM - Mansfield Lab						
1,1,1-Trichloroethane	0.999	0.020	5.45	0.109		1
1,1,2-Trichloroethane	ND	0.020	ND	0.109		1
1,1-Dichloroethane	ND	0.020	ND	0.081		1
1,1-Dichloroethene	ND	0.020	ND	0.079		1
1,2,4-Trimethylbenzene	0.022	0.020	0.108	0.098		1
1,2-Dibromoethane	ND	0.010	ND	0.077		1
1,2-Dichloroethane	ND	0.020	ND	0.081		1
1,2-Dichloropropane	ND	0.020	ND	0.092		1
1,3-Butadiene	ND	0.020	ND	0.044		1
1,3-Dichlorobenzene	ND	0.020	ND	0.120		1
1,4-Dichlorobenzene	0.031	0.020	0.186	0.120		1
Benzene	ND	0.100	ND	0.319		1
Bromodichloromethane	ND	0.010	ND	0.067		1
Bromoform	ND	0.020	ND	0.206		1
Carbon tetrachloride	0.034	0.020	0.214	0.126		1
Chlorobenzene	ND	0.020	ND	0.092		1
Chloroform	ND	0.020	ND	0.098		1
cis-1,2-Dichloroethene	ND	0.020	ND	0.079		1
Ethylbenzene	ND	0.020	ND	0.087		1
Methylene chloride	ND	0.500	ND	1.74		1
Methyl tert butyl ether	ND	0.020	ND	0.072		1
Naphthalene	ND	0.050	ND	0.260		1
Xylenes, Total	ND	0.060	ND	0.260		1
Tetrachloroethene	29.7	0.020	201	0.136		1
Toluene	0.100	0.050	0.376	0.188		1

Project Name: UNIFIRST PROPERTY IA / VI
Project Number: 1-2114-2

Lab Number: L1005229
Report Date: 04/29/10

SAMPLE RESULTS

Lab ID: L1005229-25
Client ID: SV-04
Sample Location: WOBURN, MA

Date Collected: 04/12/10 05:07
Date Received: 04/12/10
Field Prep: Not Specified

Parameter	ppbV Results	ppbV RDL	ug/m3 Results	ug/m3 RDL	Qualifier	Dilution Factor
Volatile Organics in Air by SIM - Mansfield Lab						
trans-1,2-Dichloroethene	ND	0.020	ND	0.079		1
trans-1,3-Dichloropropene	~~ND~~	0.020	~~ND~~	0.091	UJ	1
Trichloroethene	ND	0.020	ND	0.107		1
Vinyl chloride	ND	0.020	ND	0.051		1
Isopropylbenzene	ND	0.500	ND	2.46		1

~~[illegible]~~
6/5/10

Project Name: UNIFIRST PROPERTY IA / VI **Lab Number:** L1005229

Project Number: 1-2114-2 **Report Date:** 04/29/10

SAMPLE RESULTS

Lab ID:	L1005229-25	Date Collected:	04/12/10 05:07
Client ID:	SV-04	Date Received:	04/12/10
Sample Location:	WOBURN, MA	Field Prep:	Not Specified
Matrix:	Soil_Vapor		
Analytical Method:	96,APH		
Analytical Date:	04/22/10 02:39		
Analyst:	RY		

Quality Control Information

Sample Type:	100 ml/min Composite
Sample Container Type:	Canister - 6 Liter
Sampling Flow Controller:	Mechanical
Sampling Zone:	Unknown
Sampling Flow Meter RPD of pre & post-sampling calibration check:	<=20%
Were all QA/QC procedures REQUIRED by the method followed?	Yes
Were all performance/acceptance standards for the required procedures achieved?	Yes
Were significant modifications made to the method as specified in Sect 11.1.2?	No

Parameter	Result	Qualifier	Units	RDL	Dilution Factor
Petroleum Hydrocarbons in Air - Mansfield Lab					
1,3-Butadiene	ND		ug/m3	2.0	1
Methyl tert butyl ether	ND		ug/m3	2.0	1
Benzene	ND		ug/m3	2.0	1
Toluene	ND		ug/m3	2.0	1
Ethylbenzene	ND		ug/m3	2.0	1
p/m-Xylene	ND		ug/m3	4.0	1
o-Xylene	ND		ug/m3	2.0	1
Naphthalene	ND		ug/m3	2.0	1
C5-C8 Aliphatics, Adjusted	20		ug/m3	12	1
C9-C12 Aliphatics, Adjusted	300		ug/m3	14	1
C9-C10 Aromatics	ND		ug/m3	10	1

Project Name: UNIFIRST PROPERTY IA / VI
Project Number: 1-2114-2

Lab Number: L1005229
Report Date: 04/29/10

SAMPLE RESULTS

Lab ID:	L1005229-26	Date Collected:	04/12/10 04:55
Client ID:	SV-14	Date Received:	04/12/10
Sample Location:	WOBURN, MA	Field Prep:	Not Specified
Matrix:	Soil_Vapor		
Anaytical Method:	48,TO-15-SIM		
Analytical Date:	04/22/10 05:49		
Analyst:	AJ		

Parameter	ppbV Results	ppbV RDL	ug/m3 Results	ug/m3 RDL	Qualifier	Dilution Factor
Volatile Organics in Air by SIM - Mansfield Lab						
1,1,1-Trichloroethane	0.149	0.020	0.812	0.109		1
1,1,2-Trichloroethane	ND	0.020	ND	0.109		1
1,1-Dichloroethane	ND	0.020	ND	0.081		1
1,1-Dichloroethene	ND	0.020	ND	0.079		1
1,2,4-Trimethylbenzene	ND	0.020	ND	0.098		1
1,2-Dibromoethane	ND	0.010	ND	0.077		1
1,2-Dichloroethane	ND	0.020	ND	0.081		1
1,2-Dichloropropane	ND	0.020	ND	0.092		1
1,3-Butadiene	ND	0.020	ND	0.044		1
1,3-Dichlorobenzene	ND	0.020	ND	0.120		1
1,4-Dichlorobenzene	ND	0.020	ND	0.120		1
Benzene	ND	0.100	ND	0.319		1
Bromodichloromethane	ND	0.010	ND	0.067		1
Bromoform	ND	0.020	ND	0.206		1
Carbon tetrachloride	0.050	0.020	0.314	0.126		1
Chlorobenzene	ND	0.020	ND	0.092		1
Chloroform	ND	0.020	ND	0.098		1
cis-1,2-Dichloroethene	ND	0.020	ND	0.079		1
Ethylbenzene	ND	0.020	ND	0.087		1
Methylene chloride	ND	0.500	ND	1.74		1
Methyl tert butyl ether	ND	0.020	ND	0.072		1
Naphthalene	ND	0.050	ND	0.260		1
Xylenes, Total	ND	0.060	ND	0.260		1
Tetrachloroethene	108 ~~121~~	0.067 ~~0.020~~	735 ~~818~~	0.452 ~~0.136~~	~~E~~	3.333 ~~1~~
Toluene	0.077	0.050	0.290	0.188		1

6/5/10

Project Name: UNIFIRST PROPERTY IA / VI
Project Number: 1-2114-2
Lab Number: L1005229
Report Date: 04/29/10

SAMPLE RESULTS

Lab ID: L1005229-26
Client ID: SV-14
Sample Location: WOBURN, MA

Date Collected: 04/12/10 04:55
Date Received: 04/12/10
Field Prep: Not Specified

Parameter	ppbV Results	ppbV RDL	ug/m3 Results	ug/m3 RDL	Qualifier	Dilution Factor
Volatile Organics in Air by SIM - Mansfield Lab						
trans-1,2-Dichloroethene	ND	0.020	ND	0.079		1
trans-1,3-Dichloropropene	~~ND~~	0.020	~~ND~~	0.091	UJ	1
Trichloroethene	ND	0.020	ND	0.107		1
Vinyl chloride	ND	0.020	ND	0.051		1
Isopropylbenzene	ND	0.500	ND	2.46		1

~~trans~~ cis 1,2

Project Name: UNIFIRST PROPERTY IA / VI
Project Number: 1-2114-2

Lab Number: L1005229
Report Date: 04/29/10

SAMPLE RESULTS

Lab ID:	L1005229-26 D2	Date Collected:	04/12/10 04:55
Client ID:	SV-14	Date Received:	04/12/10
Sample Location:	WOBURN, MA	Field Prep:	Not Specified
Matrix:	Soil_Vapor		
Anaytical Method:	48,TO-15-SIM		
Analytical Date:	04/22/10 09:03		
Analyst:	AJ		

	ppbV		ug/m3			
Parameter	**Results**	**RDL**	**Results**	**RDL**	**Qualifier**	**Dilution Factor**
Volatile Organics in Air by SIM - Mansfield Lab						
Tetrachloroethene	108	0.067	735	0.452		3.333

BMG 6/15/10

Project Name: UNIFIRST PROPERTY IA / VI
Project Number: 1-2114-2

Lab Number: L1005229
Report Date: 04/29/10

SAMPLE RESULTS

Lab ID:	L1005229-26	Date Collected:	04/12/10 04:55
Client ID:	SV-14	Date Received:	04/12/10
Sample Location:	WOBURN, MA	Field Prep:	Not Specified
Matrix:	Soil_Vapor		
Analytical Method:	96,APH		
Analytical Date:	04/22/10 05:49		
Analyst:	RY		

Quality Control Information

Sample Type:	100 ml/min Composite
Sample Container Type:	Canister - 6 Liter
Sampling Flow Controller:	Mechanical
Sampling Zone:	Unknown
Sampling Flow Meter RPD of pre & post-sampling calibration check:	<=20%
Were all QA/QC procedures REQUIRED by the method followed?	Yes
Were all performance/acceptance standards for the required procedures achieved?	Yes
Were significant modifications made to the method as specified in Sect 11.1.2?	No

Parameter	Result	Qualifier	Units	RDL	Dilution Factor
Petroleum Hydrocarbons in Air - Mansfield Lab					
1,3-Butadiene	ND		ug/m3	2.0	1
Methyl tert butyl ether	ND		ug/m3	2.0	1
Benzene	ND		ug/m3	2.0	1
Toluene	ND		ug/m3	2.0	1
Ethylbenzene	ND		ug/m3	2.0	1
p/m-Xylene	ND		ug/m3	4.0	1
o-Xylene	ND		ug/m3	2.0	1
Naphthalene	ND		ug/m3	2.0	1
C5-C8 Aliphatics, Adjusted	13		ug/m3	12	1
C9-C12 Aliphatics, Adjusted	18	u	ug/m3	14	1
C9-C10 Aromatics	ND		ug/m3	10	1

DKC 6/5/10

Project Name: UNIFIRST PROPERTY IA / VI
Project Number: 1-2114-2

Lab Number: L1005229
Report Date: 04/29/10

SAMPLE RESULTS

Lab ID: L1005229-27 D
Client ID: SV-DUP01
Sample Location: WOBURN, MA
Matrix: Soil_Vapor
Anaytical Method: 48,TO-15-SIM
Analytical Date: 04/23/10 03:03
Analyst: AJ

Date Collected: 04/12/10 05:59
Date Received: 04/12/10
Field Prep: Not Specified

Parameter	ppbV Results	ppbV RDL	ug/m3 Results	ug/m3 RDL	Qualifier	Dilution Factor
Volatile Organics in Air by SIM - Mansfield Lab						
1,1,1-Trichloroethane	68.5	0.200	373	1.09		10
1,1,2-Trichloroethane	ND	0.200	ND	1.09		10
1,1-Dichloroethane	2.28	0.200	9.22	0.809		10
1,1-Dichloroethene	0.530	0.200	2.10	0.792		10
1,2,4-Trimethylbenzene	ND	0.200	ND	0.982		10
1,2-Dibromoethane	ND	0.100	ND	0.768		10
1,2-Dichloroethane	ND	0.200	ND	0.809		10
1,2-Dichloropropane	ND	0.200	ND	0.924		10
1,3-Butadiene	ND	0.200	ND	0.442		10
1,3-Dichlorobenzene	ND	0.200	ND	1.20		10
1,4-Dichlorobenzene	ND	0.200	ND	1.20		10
Benzene	ND	1.00	ND	3.19		10
Bromodichloromethane	ND	0.100	ND	0.670		10
Bromoform	ND	0.200	ND	2.06		10
Carbon tetrachloride	ND	0.200	ND	1.26		10
Chlorobenzene	0.420	0.200	1.93	0.920		10
Chloroform	3.27	0.200	16.0	0.976		10
cis-1,2-Dichloroethene	1.69	0.200	6.70	0.792		10
Ethylbenzene	ND	0.200	ND	0.868		10
Methylene chloride	ND	5.00	ND	17.4		10
Methyl tert butyl ether	ND	0.200	ND	0.720		10
Naphthalene	ND	0.500	ND	2.62		10
Xylenes, Total	ND	0.600	ND	2.60		10
Tetrachloroethene	23000 ~~6600~~	16.2 ~~0.200~~	156000 ~~45200~~	110 ~~1.36~~	~~E~~	808 ~~10~~
Toluene	ND	0.500	ND	1.88		10

TOC 6/5/10

Project Name: UNIFIRST PROPERTY IA / VI
Project Number: 1-2114-2

Lab Number: L1005229
Report Date: 04/29/10

SAMPLE RESULTS

Lab ID: L1005229-27 D
Client ID: SV-DUP01
Sample Location: WOBURN, MA

Date Collected: 04/12/10 05:59
Date Received: 04/12/10
Field Prep: Not Specified

Parameter	ppbV Results	ppbV RDL	ug/m3 Results	ug/m3 RDL	Qualifier	Dilution Factor
Volatile Organics in Air by SIM - Mansfield Lab						
trans-1,2-Dichloroethene	0.260	0.200	1.03	0.792		10
trans-1,3-Dichloropropene	~~ND~~	0.200	~~ND~~	0.907	UJ	10
Trichloroethene	27.6	0.200	148	1.07		10
Vinyl chloride	ND	0.200	ND	0.511		10
Isopropylbenzene	ND	5.00	ND	24.6		10

DLC 6/5/10

Project Name: UNIFIRST PROPERTY IA / VI

Project Number: 1-2114-2

Lab Number: L1005229

Report Date: 04/29/10

SAMPLE RESULTS

Lab ID: L1005229-27 D2
Client ID: *SV-DUP01*
Sample Location: WOBURN, MA
Matrix: *Soil_Vapor*
Anaytical Method: 48,TO-15-SIM
Analytical Date: 04/24/10 10:48
Analyst: AJ

Date Collected: 04/12/10 05:59
Date Received: 04/12/10
Field Prep: Not Specified

Parameter	ppbV Results	ppbV RDL	ug/m3 Results	ug/m3 RDL	Qualifier	Dilution Factor
Volatile Organics in Air by SIM - Mansfield Lab						
Tetrachloroethene	23000	16.2	156000	110		808

Project Name: UNIFIRST PROPERTY IA / VI **Lab Number:** L1005229

Project Number: 1-2114-2 **Report Date:** 04/29/10

SAMPLE RESULTS

Lab ID:	L1005229-27	D	Date Collected:	04/12/10 05:59
Client ID:	SV-DUP01		Date Received:	04/12/10
Sample Location:	WOBURN, MA		Field Prep:	Not Specified
Matrix:	Soil_Vapor			
Analytical Method:	96,APH			
Analytical Date:	04/23/10 03:03			
Analyst:	RY			

Quality Control Information

Sample Type:	100 ml/min Composite
Sample Container Type:	Canister - 6 Liter
Sampling Flow Controller:	Mechanical
Sampling Zone:	Unknown
Sampling Flow Meter RPD of pre & post-sampling calibration check:	<=20%
Were all QA/QC procedures REQUIRED by the method followed?	Yes
Were all performance/acceptance standards for the required procedures achieved?	Yes
Were significant modifications made to the method as specified in Sect 11.1.2?	No

Parameter	Result	Qualifier	Units	RDL	Dilution Factor
Petroleum Hydrocarbons in Air - Mansfield Lab					
1,3-Butadiene	ND		ug/m3	20	10
Methyl tert butyl ether	ND		ug/m3	20	10
Benzene	ND		ug/m3	20	10
Toluene	ND		ug/m3	20	10
Ethylbenzene	ND		ug/m3	20	10
p/m-Xylene	ND		ug/m3	40	10
o-Xylene	ND		ug/m3	20	10
Naphthalene	ND		ug/m3	20	10
C5-C8 Aliphatics, Adjusted	ND		ug/m3	120	10
C9-C12 Aliphatics, Adjusted	ND		ug/m3	140	10
C9-C10 Aromatics	ND		ug/m3	100	10

Project Name: UNIFIRST PROPERTY IA / VI
Project Number: 1-2114-2

Lab Number: L1005229
Report Date: 04/29/10

SAMPLE RESULTS

Lab ID: L1005229-28 D
Client ID: SV-13
Sample Location: WOBURN, MA
Matrix: Soil_Vapor
Anaytical Method: 48,TO-15-SIM
Analytical Date: 04/23/10 02:27
Analyst: AJ

Date Collected: 04/12/10 05:49
Date Received: 04/12/10
Field Prep: Not Specified

Parameter	ppbV Results	ppbV RDL	ug/m3 Results	ug/m3 RDL	Qualifier	Dilution Factor
Volatile Organics in Air by SIM - Mansfield Lab						
1,1,1-Trichloroethane	57.4	0.200	313	1.09		10
1,1,2-Trichloroethane	ND	0.200	ND	1.09		10
1,1-Dichloroethane	1.94	0.200	7.84	0.809		10
1,1-Dichloroethene	0.510	0.200	2.02	0.792		10
1,2,4-Trimethylbenzene	ND	0.200	ND	0.982		10
1,2-Dibromoethane	ND	0.100	ND	0.768		10
1,2-Dichloroethane	ND	0.200	ND	0.809		10
1,2-Dichloropropane	ND	0.200	ND	0.924		10
1,3-Butadiene	ND	0.200	ND	0.442		10
1,3-Dichlorobenzene	ND	0.200	ND	1.20		10
1,4-Dichlorobenzene	ND	0.200	ND	1.20		10
Benzene	ND	1.00	ND	3.19		10
Bromodichloromethane	ND	0.100	ND	0.670		10
Bromoform	ND	0.200	ND	2.06		10
Carbon tetrachloride	ND	0.200	ND	1.26		10
Chlorobenzene	0.300	0.200	1.38	0.920		10
Chloroform	2.73	0.200	13.3	0.976		10
cis-1,2-Dichloroethene	1.43	0.200	5.66	0.792		10
Ethylbenzene	ND	0.200	ND	0.868		10
Methylene chloride	ND	5.00	ND	17.4		10
Methyl tert butyl ether	ND	0.200	ND	0.720		10
Naphthalene	ND	0.500	ND	2.62		10
Xylenes, Total	ND	0.600	ND	2.60		10
Tetrachloroethene	29000 ~~6110~~	14.4 ~~0.200~~	196000 ~~41400~~	97.9 ~~1.36~~	E	722.1 ~~10~~
Toluene	ND	0.500	ND	1.88		10

Project Name: UNIFIRST PROPERTY IA / VI
Project Number: 1-2114-2

Lab Number: L1005229
Report Date: 04/29/10

SAMPLE RESULTS

Lab ID: L1005229-28 D
Client ID: SV-13
Sample Location: WOBURN, MA

Date Collected: 04/12/10 05:49
Date Received: 04/12/10
Field Prep: Not Specified

Parameter	ppbV Results	ppbV RDL	ug/m3 Results	ug/m3 RDL	Qualifier	Dilution Factor
Volatile Organics in Air by SIM - Mansfield Lab						
trans-1,2-Dichloroethene	0.240	0.200	0.951	0.792		10
trans-1,3-Dichloropropene	~~ND~~	0.200	~~ND~~	0.907		10
Trichloroethene	22.0	0.200	118	1.07		10
Vinyl chloride	ND	0.200	ND	0.511		10
Isopropylbenzene	ND	5.00	ND	24.6		10

Project Name: UNIFIRST PROPERTY IA / VI
Project Number: 1-2114-2

Lab Number: L1005229
Report Date: 04/29/10

SAMPLE RESULTS

Lab ID:	L1005229-28 D2	Date Collected:	04/12/10 05:49
Client ID:	SV-13 DL	Date Received:	04/12/10
Sample Location:	WOBURN, MA	Field Prep:	Not Specified
Matrix:	Soil_Vapor		
Anaytical Method:	48,TO-15-SIM		
Analytical Date:	04/24/10 10:16		
Analyst:	AJ		

	ppbV		ug/m3			
Parameter	**Results**	**RDL**	**Results**	**RDL**	**Qualifier**	**Dilution Factor**
Volatile Organics in Air by SIM - Mansfield Lab						
Tetrachloroethene	29000	14.4	196000	97.9		722.1

Project Name: UNIFIRST PROPERTY IA / VI
Project Number: 1-2114-2

Lab Number: L1005229
Report Date: 04/29/10

SAMPLE RESULTS

Lab ID:	L1005229-28	D	Date Collected:	04/12/10 05:49
Client ID:	SV-13		Date Received:	04/12/10
Sample Location:	WOBURN, MA		Field Prep:	Not Specified
Matrix:	Soil_Vapor			
Analytical Method:	96,APH			
Analytical Date:	04/23/10 02:27			
Analyst:	RY			

Quality Control Information

Sample Type:	100 ml/min Composite
Sample Container Type:	Canister - 6 Liter
Sampling Flow Controller:	Mechanical
Sampling Zone:	Unknown
Sampling Flow Meter RPD of pre & post-sampling calibration check:	<=20%
Were all QA/QC procedures REQUIRED by the method followed?	Yes
Were all performance/acceptance standards for the required procedures achieved?	Yes
Were significant modifications made to the method as specified in Sect 11.1.2?	No

Parameter	Result	Qualifier	Units	RDL	Dilution Factor
Petroleum Hydrocarbons in Air - Mansfield Lab					
1,3-Butadiene	ND		ug/m3	20	10
Methyl tert butyl ether	ND		ug/m3	20	10
Benzene	ND		ug/m3	20	10
Toluene	ND		ug/m3	20	10
Ethylbenzene	ND		ug/m3	20	10
p/m-Xylene	ND		ug/m3	40	10
o-Xylene	ND		ug/m3	20	10
Naphthalene	ND		ug/m3	20	10
C5-C8 Aliphatics, Adjusted	ND		ug/m3	120	10
C9-C12 Aliphatics, Adjusted	ND		ug/m3	140	10
C9-C10 Aromatics	ND		ug/m3	100	10

Project Name: UNIFIRST PROPERTY IA / VI
Project Number: 1-2114-2
Lab Number: L1005229
Report Date: 04/29/10

SAMPLE RESULTS

Lab ID: L1005229-29
Client ID: SV-03
Sample Location: WOBURN, MA
Matrix: Soil_Vapor
Anaytical Method: 48,TO-15-SIM
Analytical Date: 04/22/10 03:55
Analyst: AJ

Date Collected: 04/12/10 04:48
Date Received: 04/12/10
Field Prep: Not Specified

Parameter	ppbV Results	ppbV RDL	ug/m3 Results	ug/m3 RDL	Qualifier	Dilution Factor
Volatile Organics in Air by SIM - Mansfield Lab						
1,1,1-Trichloroethane	0.125	0.020	0.681	0.109		1
1,1,2-Trichloroethane	ND	0.020	ND	0.109		1
1,1-Dichloroethane	ND	0.020	ND	0.081		1
1,1-Dichloroethene	ND	0.020	ND	0.079		1
1,2,4-Trimethylbenzene	ND	0.020	ND	0.098		1
1,2-Dibromoethane	ND	0.010	ND	0.077		1
1,2-Dichloroethane	ND	0.020	ND	0.081		1
1,2-Dichloropropane	ND	0.020	ND	0.092		1
1,3-Butadiene	ND	0.020	ND	0.044		1
1,3-Dichlorobenzene	ND	0.020	ND	0.120		1
1,4-Dichlorobenzene	0.039	0.020	0.234	0.120		1
Benzene	ND	0.100	ND	0.319		1
Bromodichloromethane	ND	0.010	ND	0.067		1
Bromoform	ND	0.020	ND	0.206		1
Carbon tetrachloride	ND	0.020	ND	0.126		1
Chlorobenzene	ND	0.020	ND	0.092		1
Chloroform	ND	0.020	ND	0.098		1
cis-1,2-Dichloroethene	ND	0.020	ND	0.079		1
Ethylbenzene	ND	0.020	ND	0.087		1
Methylene chloride	ND	0.500	ND	1.74		1
Methyl tert butyl ether	ND	0.020	ND	0.072		1
Naphthalene	ND	0.050	ND	0.260		1
Xylenes, Total	ND	0.060	ND	0.260		1
Tetrachloroethene	37.6	0.020	255	0.136		1
Toluene	0.070	0.050	0.264	0.188		1

Project Name: UNIFIRST PROPERTY IA / VI
Project Number: 1-2114-2

Lab Number: L1005229
Report Date: 04/29/10

SAMPLE RESULTS

Lab ID: L1005229-29
Client ID: SV-03
Sample Location: WOBURN, MA

Date Collected: 04/12/10 04:48
Date Received: 04/12/10
Field Prep: Not Specified

Parameter	ppbV Results	ppbV RDL	ug/m3 Results	ug/m3 RDL	Qualifier	Dilution Factor
Volatile Organics in Air by SIM - Mansfield Lab						
trans-1,2-Dichloroethene	ND	0.020	ND	0.079		1
trans-1,3-Dichloropropene	~~ND~~	0.020	~~ND~~	0.091	UJ	1
Trichloroethene	ND	0.020	ND	0.107		1
Vinyl chloride	ND	0.020	ND	0.051		1
Isopropylbenzene	ND	0.500	ND	2.46		1

~~0.00~~ 4/5/10

Project Name: UNIFIRST PROPERTY IA / VI
Project Number: 1-2114-2

Lab Number: L1005229
Report Date: 04/29/10

SAMPLE RESULTS

Lab ID:	L1005229-29	Date Collected:	04/12/10 04:48
Client ID:	SV-03	Date Received:	04/12/10
Sample Location:	WOBURN, MA	Field Prep:	Not Specified
Matrix:	Soil_Vapor		
Analytical Method:	96,APH		
Analytical Date:	04/22/10 03:55		
Analyst:	RY		

Quality Control Information

Sample Type:	100 ml/min Composite
Sample Container Type:	Canister - 6 Liter
Sampling Flow Controller:	Mechanical
Sampling Zone:	Unknown
Sampling Flow Meter RPD of pre & post-sampling calibration check:	<=20%
Were all QA/QC procedures REQUIRED by the method followed?	Yes
Were all performance/acceptance standards for the required procedures achieved?	Yes
Were significant modifications made to the method as specified in Sect 11.1.2?	No

Parameter	Result	Qualifier	Units	RDL	Dilution Factor
Petroleum Hydrocarbons in Air - Mansfield Lab					
1,3-Butadiene	ND		ug/m3	2.0	1
Methyl tert butyl ether	ND		ug/m3	2.0	1
Benzene	ND		ug/m3	2.0	1
Toluene	ND		ug/m3	2.0	1
Ethylbenzene	ND		ug/m3	2.0	1
p/m-Xylene	ND		ug/m3	4.0	1
o-Xylene	ND		ug/m3	2.0	1
Naphthalene	ND		ug/m3	2.0	1
C5-C8 Aliphatics, Adjusted	13		ug/m3	12	1
C9-C12 Aliphatics, Adjusted	20	u	ug/m3	14	1
C9-C10 Aromatics	ND		ug/m3	10	1

Project Name: UNIFIRST PROPERTY IA / VI
Project Number: 1-2114-2

Lab Number: L1005229
Report Date: 04/29/10

SAMPLE RESULTS

Lab ID: L1005229-30 D
Client ID: SV-15
Sample Location: WOBURN, MA
Matrix: Soil_Vapor
Anaytical Method: 48,TO-15-SIM
Analytical Date: 04/22/10 22:46
Analyst: AJ

Date Collected: 04/12/10 06:26
Date Received: 04/12/10
Field Prep: Not Specified

Parameter	ppbV Results	ppbV RDL	ug/m3 Results	ug/m3 RDL	Qualifier	Dilution Factor
Volatile Organics in Air by SIM - Mansfield Lab						
1,1,1-Trichloroethane	8.83	0.200	48.1	1.09		10
1,1,2-Trichloroethane	ND	0.200	ND	1.09		10
1,1-Dichloroethane	3.91	0.200	15.8	0.809		10
1,1-Dichloroethene	ND	0.200	ND	0.792		10
1,2,4-Trimethylbenzene	ND	0.200	ND	0.982		10
1,2-Dibromoethane	ND	0.100	ND	0.768		10
1,2-Dichloroethane	ND	0.200	ND	0.809		10
1,2-Dichloropropane	ND	0.200	ND	0.924		10
1,3-Butadiene	ND	0.200	ND	0.442		10
1,3-Dichlorobenzene	ND	0.200	ND	1.20		10
1,4-Dichlorobenzene	ND	0.200	ND	1.20		10
Benzene	ND	1.00	ND	3.19		10
Bromodichloromethane	ND	0.100	ND	0.670		10
Bromoform	ND	0.200	ND	2.06		10
Carbon tetrachloride	ND	0.200	ND	1.26		10
Chlorobenzene	ND	0.200	ND	0.920		10
Chloroform	0.780	0.200	3.80	0.976		10
cis-1,2-Dichloroethene	11.5	0.200	45.5	0.792		10
Ethylbenzene	ND	0.200	ND	0.868		10
Methylene chloride	ND	5.00	ND	17.4		10
Methyl tert butyl ether	ND	0.200	ND	0.720		10
Naphthalene	ND	0.500	ND	2.62		10
Xylenes, Total	ND	0.600	ND	2.60		10
Tetrachloroethene	1350 ~~1850~~	1.39 ~~0.200~~	9160 ~~12500~~	9.45 ~~1.36~~	~~E~~	69.71 ~~10~~
Toluene	ND	0.500	ND	1.88		10

DLCO 6/5/10

Project Name: UNIFIRST PROPERTY IA / VI
Project Number: 1-2114-2

Lab Number: L1005229
Report Date: 04/29/10

SAMPLE RESULTS

Lab ID: L1005229-30 D
Client ID: SV-15
Sample Location: WOBURN, MA

Date Collected: 04/12/10 06:26
Date Received: 04/12/10
Field Prep: Not Specified

Parameter	ppbV Results	ppbV RDL	ug/m3 Results	ug/m3 RDL	Qualifier	Dilution Factor
Volatile Organics in Air by SIM - Mansfield Lab						
trans-1,2-Dichloroethene	0.300	0.200	1.19	0.792		10
trans-1,3-Dichloropropene	~~ND~~	0.200	~~ND~~	0.907	UJ	10
Trichloroethene	31.2	0.200	168	1.07		10
Vinyl chloride	ND	0.200	ND	0.511		10
Isopropylbenzene	ND	5.00	ND	24.6		10

6/5/10

Project Name: UNIFIRST PROPERTY IA / VI
Project Number: 1-2114-2

Lab Number: L1005229
Report Date: 04/29/10

SAMPLE RESULTS

Lab ID:	L1005229-30 D2	Date Collected:	04/12/10 06:26
Client ID:	SV-15 DL	Date Received:	04/12/10
Sample Location:	WOBURN, MA	Field Prep:	Not Specified
Matrix:	Soil_Vapor		
Anaytical Method:	48,TO-15-SIM		
Analytical Date:	04/24/10 09:11		
Analyst:	AJ		

	ppbV		ug/m3			
Parameter	**Results**	**RDL**	**Results**	**RDL**	**Qualifier**	**Dilution Factor**
Volatile Organics in Air by SIM - Mansfield Lab						
Tetrachloroethene	1350	1.39	9160	9.45		69.71

DLOQ 6/5/10

Project Name:	UNIFIRST PROPERTY IA / VI	**Lab Number:**	L1005229
Project Number:	1-2114-2	**Report Date:**	04/29/10

SAMPLE RESULTS

Lab ID:	L1005229-30 D	Date Collected:	04/12/10 06:26
Client ID:	SV-15	Date Received:	04/12/10
Sample Location:	WOBURN, MA	Field Prep:	Not Specified
Matrix:	Soil_Vapor		
Analytical Method:	96,APH		
Analytical Date:	04/22/10 22:46		
Analyst:	RY		

Quality Control Information

Sample Type:	100 ml/min Composite
Sample Container Type:	Canister - 6 Liter
Sampling Flow Controller:	Mechanical
Sampling Zone:	Unknown
Sampling Flow Meter RPD of pre & post-sampling calibration check:	<=20%
Were all QA/QC procedures REQUIRED by the method followed?	Yes
Were all performance/acceptance standards for the required procedures achieved?	Yes
Were significant modifications made to the method as specified in Sect 11.1.2?	No

Parameter	Result	Qualifier	Units	RDL	Dilution Factor
Petroleum Hydrocarbons in Air - Mansfield Lab					
1,3-Butadiene	ND		ug/m3	20	10
Methyl tert butyl ether	ND		ug/m3	20	10
Benzene	ND		ug/m3	20	10
Toluene	ND		ug/m3	20	10
Ethylbenzene	ND		ug/m3	20	10
p/m-Xylene	ND		ug/m3	40	10
o-Xylene	ND		ug/m3	20	10
Naphthalene	ND		ug/m3	20	10
C5-C8 Aliphatics, Adjusted	ND		ug/m3	120	10
C9-C12 Aliphatics, Adjusted	ND		ug/m3	140	10
C9-C10 Aromatics	ND		ug/m3	100	10

Project Name: UNIFIRST PROPERTY IA / VI
Project Number: 1-2114-2

Lab Number: L1005229
Report Date: 04/29/10

SAMPLE RESULTS

Lab ID: L1005229-31 D
Client ID: SV-12
Sample Location: WOBURN, MA
Matrix: Soil_Vapor
Anaytical Method: 48,TO-15-SIM
Analytical Date: 04/23/10 00:00
Analyst: AJ

Date Collected: 04/12/10 05:24
Date Received: 04/12/10
Field Prep: Not Specified

Parameter	ppbV Results	ppbV RDL	ug/m3 Results	ug/m3 RDL	Qualifier	Dilution Factor
Volatile Organics in Air by SIM - Mansfield Lab						
1,1,1-Trichloroethane	192	0.200	1050	1.09		10
1,1,2-Trichloroethane	ND	0.200	ND	1.09		10
1,1-Dichloroethane	0.900	0.200	3.64	0.809		10
1,1-Dichloroethene	1.52	0.200	6.02	0.792		10
1,2,4-Trimethylbenzene	ND	0.200	ND	0.982		10
1,2-Dibromoethane	ND	0.100	ND	0.768		10
1,2-Dichloroethane	ND	0.200	ND	0.809		10
1,2-Dichloropropane	ND	0.200	ND	0.924		10
1,3-Butadiene	ND	0.200	ND	0.442		10
1,3-Dichlorobenzene	ND	0.200	ND	1.20		10
1,4-Dichlorobenzene	ND	0.200	ND	1.20		10
Benzene	ND	1.00	ND	3.19		10
Bromodichloromethane	ND	0.100	ND	0.670		10
Bromoform	ND	0.200	ND	2.06		10
Carbon tetrachloride	ND	0.200	ND	1.26		10
Chlorobenzene	ND	0.200	ND	0.920		10
Chloroform	ND	0.200	ND	0.976		10
cis-1,2-Dichloroethene	0.300	0.200	1.19	0.792		10
Ethylbenzene	ND	0.200	ND	0.868		10
Methylene chloride	ND	5.00	ND	17.4		10
Methyl tert butyl ether	ND	0.200	ND	0.720		10
Naphthalene	ND	0.500	ND	2.62		10
Xylenes, Total	ND	0.600	ND	2.60		10
Tetrachloroethene	2360 ~~2570~~	2.69 ~~0.200~~	16000 ~~17400~~	18.2 ~~1.36~~	~~E~~	134.7 ~~10~~
Toluene	ND	0.500	ND	1.88		10

Project Name: UNIFIRST PROPERTY IA / VI
Project Number: 1-2114-2

Lab Number: L1005229
Report Date: 04/29/10

SAMPLE RESULTS

Lab ID: L1005229-31 D
Client ID: SV-12
Sample Location: WOBURN, MA

Date Collected: 04/12/10 05:24
Date Received: 04/12/10
Field Prep: Not Specified

Parameter	ppbV Results	ppbV RDL	ug/m3 Results	ug/m3 RDL	Qualifier	Dilution Factor
Volatile Organics in Air by SIM - Mansfield Lab						
trans-1,2-Dichloroethene	ND	0.200	ND	0.792		10
trans-1,3-Dichloropropene	~~ND~~	0.200	~~ND~~	0.907	UJ	10
Trichloroethene	4.89	0.200	26.2	1.07		10
Vinyl chloride	ND	0.200	ND	0.511		10
Isopropylbenzene	ND	5.00	ND	24.6		10

TAG 6/5/10

Project Name: UNIFIRST PROPERTY IA / VI
Project Number: 1-2114-2

Lab Number: L1005229
Report Date: 04/29/10

SAMPLE RESULTS

Lab ID:	L1005229-31 D2	Date Collected:	04/12/10 05:24
Client ID:	SV-12 DL	Date Received:	04/12/10
Sample Location:	WOBURN, MA	Field Prep:	Not Specified
Matrix:	Soil_Vapor		
Anaytical Method:	48,TO-15-SIM		
Analytical Date:	04/23/10 21:27		
Analyst:	AJ		

Parameter	ppbV Results	ppbV RDL	ug/m3 Results	ug/m3 RDL	Qualifier	Dilution Factor
Volatile Organics in Air by SIM - Mansfield Lab						
Tetrachloroethene	2360	2.69	16000	18.2		134.7

Project Name: UNIFIRST PROPERTY IA / VI **Lab Number:** L1005229

Project Number: 1-2114-2 **Report Date:** 04/29/10

SAMPLE RESULTS

Lab ID:	L1005229-31	D	Date Collected:	04/12/10 05:24
Client ID:	SV-12		Date Received:	04/12/10
Sample Location:	WOBURN, MA		Field Prep:	Not Specified
Matrix:	Soil_Vapor			
Analytical Method:	96,APH			
Analytical Date:	04/23/10 00:00			
Analyst:	RY			

Quality Control Information

Sample Type:	100 ml/min Composite
Sample Container Type:	Canister - 6 Liter
Sampling Flow Controller:	Mechanical
Sampling Zone:	Unknown
Sampling Flow Meter RPD of pre & post-sampling calibration check:	<=20%
Were all QA/QC procedures REQUIRED by the method followed?	Yes
Were all performance/acceptance standards for the required procedures achieved?	Yes
Were significant modifications made to the method as specified in Sect 11.1.2?	No

Parameter	Result	Qualifier	Units	RDL	Dilution Factor
Petroleum Hydrocarbons in Air - Mansfield Lab					
1,3-Butadiene	ND		ug/m3	20	10
Methyl tert butyl ether	ND		ug/m3	20	10
Benzene	ND		ug/m3	20	10
Toluene	ND		ug/m3	20	10
Ethylbenzene	ND		ug/m3	20	10
p/m-Xylene	ND		ug/m3	40	10
o-Xylene	ND		ug/m3	20	10
Naphthalene	ND		ug/m3	20	10
C5-C8 Aliphatics, Adjusted	ND		ug/m3	120	10
C9-C12 Aliphatics, Adjusted	ND		ug/m3	140	10
C9-C10 Aromatics	ND		ug/m3	100	10

Project Name: UNIFIRST PROPERTY IA / VI
Project Number: 1-2114-2

Lab Number: L1005229
Report Date: 04/29/10

SAMPLE RESULTS

Lab ID: L1005229-32 D
Client ID: SV-05
Sample Location: WOBURN, MA
Matrix: Soil_Vapor
Anaytical Method: 48,TO-15-SIM
Analytical Date: 04/23/10 04:54
Analyst: AJ

Date Collected: 04/12/10 05:15
Date Received: 04/12/10
Field Prep: Not Specified

Parameter	ppbV Results	ppbV RDL	ug/m3 Results	ug/m3 RDL	Qualifier	Dilution Factor
Volatile Organics in Air by SIM - Mansfield Lab						
1,1,1-Trichloroethane	169	0.200	920	1.09		10
1,1,2-Trichloroethane	ND	0.200	ND	1.09		10
1,1-Dichloroethane	ND	0.200	ND	0.809		10
1,1-Dichloroethene	ND	0.200	ND	0.792		10
1,2,4-Trimethylbenzene	ND	0.200	ND	0.982		10
1,2-Dibromoethane	ND	0.100	ND	0.768		10
1,2-Dichloroethane	ND	0.200	ND	0.809		10
1,2-Dichloropropane	ND	0.200	ND	0.924		10
1,3-Butadiene	ND	0.200	ND	0.442		10
1,3-Dichlorobenzene	ND	0.200	ND	1.20		10
1,4-Dichlorobenzene	ND	0.200	ND	1.20		10
Benzene	ND	1.00	ND	3.19		10
Bromodichloromethane	ND	0.100	ND	0.670		10
Bromoform	ND	0.200	ND	2.06		10
Carbon tetrachloride	ND	0.200	ND	1.26		10
Chlorobenzene	ND	0.200	ND	0.920		10
Chloroform	0.250	0.200	1.22	0.976		10
cis-1,2-Dichloroethene	ND	0.200	ND	0.792		10
Ethylbenzene	ND	0.200	ND	0.868		10
Methylene chloride	ND	5.00	ND	17.4		10
Methyl tert butyl ether	ND	0.200	ND	0.720		10
Naphthalene	ND	0.500	ND	2.62		10
Xylenes, Total	ND	0.600	ND	2.60		10
Tetrachloroethene	30000 ~~7560~~	20.2 ~~0.200~~	203000 ~~51200~~	137 ~~1.36~~	~~E~~	1012 ~~10~~
Toluene	ND	0.500	ND	1.88		10

DAGS 6/5/10

Project Name: UNIFIRST PROPERTY IA / VI
Project Number: 1-2114-2
Lab Number: L1005229
Report Date: 04/29/10

SAMPLE RESULTS

Lab ID: L1005229-32 D
Client ID: SV-05
Sample Location: WOBURN, MA

Date Collected: 04/12/10 05:15
Date Received: 04/12/10
Field Prep: Not Specified

Parameter	ppbV Results	ppbV RDL	ug/m3 Results	ug/m3 RDL	Qualifier	Dilution Factor
Volatile Organics in Air by SIM - Mansfield Lab						
trans-1,2-Dichloroethene	ND	0.200	ND	0.792		10
trans-1,3-Dichloropropene	~~ND~~	0.200	~~ND~~	0.907	UJ	10
Trichloroethene	1.34	0.200	7.20	1.07		10
Vinyl chloride	ND	0.200	ND	0.511		10
Isopropylbenzene	ND	5.00	ND	24.6		10

~~DEQ~~ dsTIO

Project Name: UNIFIRST PROPERTY IA / VI
Project Number: 1-2114-2

Lab Number: L1005229
Report Date: 04/29/10

SAMPLE RESULTS

Lab ID:	L1005229-32 D2	Date Collected:	04/12/10 05:15
Client ID:	SV-05	Date Received:	04/12/10
Sample Location:	WOBURN, MA	Field Prep:	Not Specified
Matrix:	Soil_Vapor		
Anaytical Method:	48,TO-15-SIM		
Analytical Date:	04/24/10 02:21		
Analyst:	AJ		

	ppbV		ug/m3			
Parameter	**Results**	**RDL**	**Results**	**RDL**	**Qualifier**	**Dilution Factor**
Volatile Organics in Air by SIM - Mansfield Lab						
Tetrachloroethene	30000	20.2	203000	137		1012

DNQ
cdstro

Project Name: UNIFIRST PROPERTY IA / VI **Lab Number:** L1005229

Project Number: 1-2114-2 **Report Date:** 04/29/10

SAMPLE RESULTS

Lab ID:	L1005229-32	D	Date Collected:	04/12/10 05:15
Client ID:	SV-05		Date Received:	04/12/10
Sample Location:	WOBURN, MA		Field Prep:	Not Specified
Matrix:	Soil_Vapor			
Analytical Method:	96,APH			
Analytical Date:	04/23/10 04:54			
Analyst:	RY			

Quality Control Information

Sample Type:	100 ml/min Composite
Sample Container Type:	Canister - 6 Liter
Sampling Flow Controller:	Mechanical
Sampling Zone:	Unknown
Sampling Flow Meter RPD of pre & post-sampling calibration check:	<=20%
Were all QA/QC procedures REQUIRED by the method followed?	Yes
Were all performance/acceptance standards for the required procedures achieved?	Yes
Were significant modifications made to the method as specified in Sect 11.1.2?	No

Parameter	Result	Qualifier	Units	RDL	Dilution Factor
Petroleum Hydrocarbons in Air - Mansfield Lab					
1,3-Butadiene	ND		ug/m3	20	10
Methyl tert butyl ether	ND		ug/m3	20	10
Benzene	ND		ug/m3	20	10
Toluene	ND		ug/m3	20	10
Ethylbenzene	ND		ug/m3	20	10
p/m-Xylene	ND		ug/m3	40	10
o-Xylene	ND		ug/m3	20	10
Naphthalene	ND		ug/m3	20	10
C5-C8 Aliphatics, Adjusted	ND		ug/m3	120	10
C9-C12 Aliphatics, Adjusted	ND		ug/m3	140	10
C9-C10 Aromatics	ND		ug/m3	100	10

Project Name: UNIFIRST PROPERTY IA / VI
Project Number: 1-2114-2

Lab Number: L1005229
Report Date: 04/29/10

SAMPLE RESULTS

Lab ID: L1005229-33 D
Client ID: SV-10
Sample Location: WOBURN, MA
Matrix: Soil_Vapor
Anaytical Method: 48,TO-15-SIM
Analytical Date: 04/23/10 04:17
Analyst: AJ

Date Collected: 04/12/10 05:14
Date Received: 04/12/10
Field Prep: Not Specified

Parameter	ppbV Results	ppbV RDL	ug/m3 Results	ug/m3 RDL	Qualifier	Dilution Factor
Volatile Organics in Air by SIM - Mansfield Lab						
1,1,1-Trichloroethane	48.6	0.200	265	1.09		10
1,1,2-Trichloroethane	ND	0.200	ND	1.09		10
1,1-Dichloroethane	0.380	0.200	1.54	0.809		10
1,1-Dichloroethene	ND	0.200	ND	0.792		10
1,2,4-Trimethylbenzene	ND	0.200	ND	0.982		10
1,2-Dibromoethane	ND	0.100	ND	0.768		10
1,2-Dichloroethane	ND	0.200	ND	0.809		10
1,2-Dichloropropane	ND	0.200	ND	0.924		10
1,3-Butadiene	ND	0.200	ND	0.442		10
1,3-Dichlorobenzene	ND	0.200	ND	1.20		10
1,4-Dichlorobenzene	ND	0.200	ND	1.20		10
Benzene	ND	1.00	ND	3.19		10
Bromodichloromethane	ND	0.100	ND	0.670		10
Bromoform	ND	0.200	ND	2.06		10
Carbon tetrachloride	ND	0.200	ND	1.26		10
Chlorobenzene	ND	0.200	ND	0.920		10
Chloroform	1.85	0.200	9.02	0.976		10
cis-1,2-Dichloroethene	ND	0.200	ND	0.792		10
Ethylbenzene	ND	0.200	ND	0.868		10
Methylene chloride	ND	5.00	ND	17.4		10
Methyl tert butyl ether	ND	0.200	ND	0.720		10
Naphthalene	ND	0.500	ND	2.62		10
Xylenes, Total	ND	0.600	ND	2.60		10
Tetrachloroethene	31600 ~~7190~~	19.4 ~~0.200~~	214000 ~~48700~~	131 ~~1.36~~	~~E~~	968.2 ~~10~~
Toluene	ND	0.500	ND	1.88		10

Project Name: UNIFIRST PROPERTY IA / VI **Lab Number:** L1005229

Project Number: 1-2114-2 **Report Date:** 04/29/10

SAMPLE RESULTS

Lab ID: L1005229-33 D
Client ID: SV-10
Sample Location: WOBURN, MA

Date Collected: 04/12/10 05:14
Date Received: 04/12/10
Field Prep: Not Specified

Parameter	ppbV Results	ppbV RDL	ug/m3 Results	ug/m3 RDL	Qualifier	Dilution Factor
Volatile Organics in Air by SIM - Mansfield Lab						
trans-1,2-Dichloroethene	ND	0.200	ND	0.792		10
trans-1,3-Dichloropropene	~~ND~~	0.200	~~ND~~	0.907	UJ	10
Trichloroethene	2.72	0.200	14.6	1.07		10
Vinyl chloride	ND	0.200	ND	0.511		10
Isopropylbenzene	ND	5.00	ND	24.6		10

DLQ
6/5/10

Project Name: UNIFIRST PROPERTY IA / VI
Project Number: 1-2114-2

Lab Number: L1005229
Report Date: 04/29/10

SAMPLE RESULTS

Lab ID:	L1005229-33 D2	Date Collected:	04/12/10 05:14
Client ID:	SV-10	Date Received:	04/12/10
Sample Location:	WOBURN, MA	Field Prep:	Not Specified
Matrix:	*Soil_Vapor*		
Anaytical Method:	48,TO-15-SIM		
Analytical Date:	04/24/10 01:44		
Analyst:	AJ		

Parameter	ppbV Results	ppbV RDL	ug/m3 Results	ug/m3 RDL	Qualifier	Dilution Factor
Volatile Organics in Air by SIM - Mansfield Lab						
Tetrachloroethene	31600	19.4	214000	131		968.2

6/5/10

Project Name: UNIFIRST PROPERTY IA / VI **Lab Number:** L1005229

Project Number: 1-2114-2 **Report Date:** 04/29/10

SAMPLE RESULTS

Lab ID:	L1005229-33	D	Date Collected:	04/12/10 05:14
Client ID:	*SV-10*		*Date Received:*	*04/12/10*
Sample Location:	WOBURN, MA		Field Prep:	Not Specified
Matrix:	Soil_Vapor			
Analytical Method:	96,APH			
Analytical Date:	04/23/10 04:17			
Analyst:	RY			

Quality Control Information

Sample Type:	100 ml/min Composite
Sample Container Type:	Canister - 6 Liter
Sampling Flow Controller:	Mechanical
Sampling Zone:	Unknown
Sampling Flow Meter RPD of pre & post-sampling calibration check:	<=20%
Were all QA/QC procedures REQUIRED by the method followed?	Yes
Were all performance/acceptance standards for the required procedures achieved?	Yes
Were significant modifications made to the method as specified in Sect 11.1.2?	No

Parameter	Result	Qualifier	Units	RDL	Dilution Factor
Petroleum Hydrocarbons in Air - Mansfield Lab					
1,3-Butadiene	ND		ug/m3	20	10
Methyl tert butyl ether	ND		ug/m3	20	10
Benzene	ND		ug/m3	20	10
Toluene	ND		ug/m3	20	10
Ethylbenzene	ND		ug/m3	20	10
p/m-Xylene	ND		ug/m3	40	10
o-Xylene	ND		ug/m3	20	10
Naphthalene	ND		ug/m3	20	10
C5-C8 Aliphatics, Adjusted	ND		ug/m3	120	10
C9-C12 Aliphatics, Adjusted	ND		ug/m3	140	10
C9-C10 Aromatics	ND		ug/m3	100	10

Project Name: UNIFIRST PROPERTY IA / VI
Project Number: 1-2114-2

Lab Number: L1005229
Report Date: 04/29/10

SAMPLE RESULTS

Lab ID: L1005229-34 D
Client ID: SV-DUP02
Sample Location: WOBURN, MA
Matrix: Soil_Vapor
Anaytical Method: 48,TO-15-SIM
Analytical Date: 04/23/10 01:14
Analyst: AJ

Date Collected: 04/12/10 06:12
Date Received: 04/12/10
Field Prep: Not Specified

Parameter	ppbV Results	ppbV RDL	ug/m3 Results	ug/m3 RDL	Qualifier	Dilution Factor
Volatile Organics in Air by SIM - Mansfield Lab						
1,1,1-Trichloroethane	12.4	0.188	67.8	1.02		9.404
1,1,2-Trichloroethane	ND	0.188	ND	1.02		9.404
1,1-Dichloroethane	0.263	0.188	1.06	0.761		9.404
1,1-Dichloroethene	ND	0.188	ND	0.745		9.404
1,2,4-Trimethylbenzene	ND	0.188	ND	0.924		9.404
1,2-Dibromoethane	ND	0.094	ND	0.722		9.404
1,2-Dichloroethane	ND	0.188	ND	0.761		9.404
1,2-Dichloropropane	ND	0.188	ND	0.868		9.404
1,3-Butadiene	ND	0.188	ND	0.416		9.404
1,3-Dichlorobenzene	ND	0.188	ND	1.13		9.404
1,4-Dichlorobenzene	ND	0.188	ND	1.13		9.404
Benzene	ND	0.940	ND	3.00		9.404
Bromodichloromethane	ND	0.094	ND	0.630		9.404
Bromoform	ND	0.188	ND	1.94		9.404
Carbon tetrachloride	ND	0.188	ND	1.18		9.404
Chlorobenzene	ND	0.188	ND	0.865		9.404
Chloroform	0.367	0.188	1.79	0.918		9.404
cis-1,2-Dichloroethene	49.1	0.188	194	0.745		9.404
Ethylbenzene	ND	0.188	ND	0.816		9.404
Methylene chloride	ND	4.70	ND	16.3		9.404
Methyl tert butyl ether	ND	0.188	ND	0.678		9.404
Naphthalene	ND	0.470	ND	2.46		9.404
Xylenes, Total	ND	0.564	ND	2.45		9.404
Tetrachloroethene	3330 ~~2660~~	2.51 ~~0.188~~	22600 ~~18000~~	17.0 ~~1.27~~	~~E~~	125.4 ~~9.404~~
Toluene	ND	0.470	ND	1.77		9.404

DAQ 6/5/10

Project Name: UNIFIRST PROPERTY IA / VI
Project Number: 1-2114-2

Lab Number: L1005229
Report Date: 04/29/10

SAMPLE RESULTS

Lab ID: L1005229-34 D
Client ID: SV-DUP02
Sample Location: WOBURN, MA

Date Collected: 04/12/10 06:12
Date Received: 04/12/10
Field Prep: Not Specified

Parameter	ppbV Results	ppbV RDL	ug/m3 Results	ug/m3 RDL	Qualifier	Dilution Factor
Volatile Organics in Air by SIM - Mansfield Lab						
trans-1,2-Dichloroethene	0.348	0.188	1.38	0.745		9.404
trans-1,3-Dichloropropene	~~ND~~	0.188	~~ND~~	0.853	UJ	9.404
Trichloroethene	83.6	0.188	449	1.01		9.404
Vinyl chloride	ND	0.188	ND	0.480		9.404
Isopropylbenzene	ND	4.70	ND	23.1		9.404

6/5/10

Project Name: UNIFIRST PROPERTY IA / VI

Lab Number: L1005229

Project Number: 1-2114-2

Report Date: 04/29/10

SAMPLE RESULTS

Lab ID:	L1005229-34 D2	Date Collected:	04/12/10 06:12
Client ID:	SV-DUP02 DL	Date Received:	04/12/10
Sample Location:	WOBURN, MA	Field Prep:	Not Specified
Matrix:	Soil_Vapor		
Anaytical Method:	48,TO-15-SIM		
Analytical Date:	04/23/10 22:41		
Analyst:	AJ		

	ppbV		ug/m3			
Parameter	**Results**	**RDL**	**Results**	**RDL**	**Qualifier**	**Dilution Factor**
Volatile Organics in Air by SIM - Mansfield Lab						
Tetrachloroethene	3330	2.51	22600	17.0		125.4

DLCG 6/15/10

Project Name:	UNIFIRST PROPERTY IA / VI	**Lab Number:**	L1005229
Project Number:	1-2114-2	**Report Date:**	04/29/10

SAMPLE RESULTS

Lab ID:	*L1005229-34 D*	*Date Collected:*	*04/12/10 06:12*
Client ID:	SV-DUP02	Date Received:	04/12/10
Sample Location:	WOBURN, MA	Field Prep:	Not Specified
Matrix:	Soil_Vapor		
Analytical Method:	96,APH		
Analytical Date:	04/23/10 01:14		
Analyst:	RY		

Quality Control Information

Sample Type:	100 ml/min Composite
Sample Container Type:	Canister - 6 Liter
Sampling Flow Controller:	Mechanical
Sampling Zone:	Unknown
Sampling Flow Meter RPD of pre & post-sampling calibration check:	<=20%
Were all QA/QC procedures REQUIRED by the method followed?	Yes
Were all performance/acceptance standards for the required procedures achieved?	Yes
Were significant modifications made to the method as specified in Sect 11.1.2?	No

Parameter	Result	Qualifier	Units	RDL	Dilution Factor
Petroleum Hydrocarbons in Air - Mansfield Lab					
1,3-Butadiene	ND		ug/m3	19	9.4
Methyl tert butyl ether	ND		ug/m3	19	9.4
Benzene	ND		ug/m3	19	9.4
Toluene	ND		ug/m3	19	9.4
Ethylbenzene	ND		ug/m3	19	9.4
p/m-Xylene	ND		ug/m3	38	9.4
o-Xylene	ND		ug/m3	19	9.4
Naphthalene	ND		ug/m3	19	9.4
C5-C8 Aliphatics, Adjusted	ND		ug/m3	110	9.4
C9-C12 Aliphatics, Adjusted	ND		ug/m3	130	9.4
C9-C10 Aromatics	ND		ug/m3	94	9.4

Project Name: UNIFIRST PROPERTY IA / VI
Project Number: 1-2114-2

Lab Number: L1005229
Report Date: 04/29/10

SAMPLE RESULTS

Lab ID: L1005229-35 D
Client ID: SV-09
Sample Location: WOBURN, MA
Matrix: Soil_Vapor
Anaytical Method: 48,TO-15-SIM
Analytical Date: 04/23/10 01:50
Analyst: AJ

Date Collected: 04/12/10 04:47
Date Received: 04/12/10
Field Prep: Not Specified

Parameter	ppbV Results	ppbV RDL	ug/m3 Results	ug/m3 RDL	Qualifier	Dilution Factor
Volatile Organics in Air by SIM - Mansfield Lab						
1,1,1-Trichloroethane	6.10	0.200	33.2	1.09		10
1,1,2-Trichloroethane	ND	0.200	ND	1.09		10
1,1-Dichloroethane	ND	0.200	ND	0.809		10
1,1-Dichloroethene	ND	0.200	ND	0.792		10
1,2,4-Trimethylbenzene	ND	0.200	ND	0.982		10
1,2-Dibromoethane	ND	0.100	ND	0.768		10
1,2-Dichloroethane	ND	0.200	ND	0.809		10
1,2-Dichloropropane	ND	0.200	ND	0.924		10
1,3-Butadiene	ND	0.200	ND	0.442		10
1,3-Dichlorobenzene	ND	0.200	ND	1.20		10
1,4-Dichlorobenzene	ND	0.200	ND	1.20		10
Benzene	ND	1.00	ND	3.19		10
Bromodichloromethane	ND	0.100	ND	0.670		10
Bromoform	ND	0.200	ND	2.06		10
Carbon tetrachloride	ND	0.200	ND	1.26		10
Chlorobenzene	ND	0.200	ND	0.920		10
Chloroform	ND	0.200	ND	0.976		10
cis-1,2-Dichloroethene	ND	0.200	ND	0.792		10
Ethylbenzene	ND	0.200	ND	0.868		10
Methylene chloride	ND	5.00	ND	17.4		10
Methyl tert butyl ether	ND	0.200	ND	0.720		10
Naphthalene	ND	0.500	ND	2.62		10
Xylenes, Total	ND	0.600	ND	2.60		10
Tetrachloroethene	3700 ~~3300~~	2.57 ~~0.200~~	25100 ~~22300~~	17.4 ~~1.36~~	~~E~~	128.3 ~~10~~
Toluene	ND	0.500	ND	1.88		10

Project Name: UNIFIRST PROPERTY IA / VI
Project Number: 1-2114-2

Lab Number: L1005229
Report Date: 04/29/10

SAMPLE RESULTS

Lab ID: L1005229-35 D
Client ID: SV-09
Sample Location: WOBURN, MA

Date Collected: 04/12/10 04:47
Date Received: 04/12/10
Field Prep: Not Specified

Parameter	ppbV Results	ppbV RDL	ug/m3 Results	ug/m3 RDL	Qualifier	Dilution Factor
Volatile Organics in Air by SIM - Mansfield Lab						
trans-1,2-Dichloroethene	ND	0.200	ND	0.792		10
trans-1,3-Dichloropropene	~~ND~~	0.200	~~ND~~	0.907	UJ	10
Trichloroethene	0.840	0.200	4.51	1.07		10
Vinyl chloride	ND	0.200	ND	0.511		10
Isopropylbenzene	ND	5.00	ND	24.6		10

DHG
6/5/10

Project Name: UNIFIRST PROPERTY IA / VI

Project Number: 1-2114-2

Lab Number: L1005229

Report Date: 04/29/10

SAMPLE RESULTS

Lab ID:	L1005229-35 D2	Date Collected:	04/12/10 04:47
Client ID:	SV-09 DL	Date Received:	04/12/10
Sample Location:	WOBURN, MA	Field Prep:	Not Specified
Matrix:	Soil_Vapor		
Anaytical Method:	48,TO-15-SIM		
Analytical Date:	04/23/10 23:18		
Analyst:	AJ		

	ppbV		ug/m3			
Parameter	**Results**	**RDL**	**Results**	**RDL**	**Qualifier**	**Dilution Factor**
Volatile Organics in Air by SIM - Mansfield Lab						
Tetrachloroethene	3700	2.57	25100	17.4		128.3

DLC 6/15/10

Project Name: UNIFIRST PROPERTY IA / VI
Project Number: 1-2114-2

Lab Number: L1005229
Report Date: 04/29/10

SAMPLE RESULTS

Lab ID:	L1005229-35	D	Date Collected:	04/12/10 04:47
Client ID:	SV-09		Date Received:	04/12/10
Sample Location:	WOBURN, MA		Field Prep:	Not Specified
Matrix:	Soil_Vapor			
Analytical Method:	*96,APH*			
Analytical Date:	04/23/10 01:50			
Analyst:	RY			

Quality Control Information

Sample Type:	100 ml/min Composite
Sample Container Type:	Canister - 6 Liter
Sampling Flow Controller:	Mechanical
Sampling Zone:	Unknown
Sampling Flow Meter RPD of pre & post-sampling calibration check:	<=20%
Were all QA/QC procedures REQUIRED by the method followed?	Yes
Were all performance/acceptance standards for the required procedures achieved?	Yes
Were significant modifications made to the method as specified in Sect 11.1.2?	No

Parameter	Result	Qualifier	Units	RDL	Dilution Factor
Petroleum Hydrocarbons in Air - Mansfield Lab					
1,3-Butadiene	ND		ug/m3	20	10
Methyl tert butyl ether	ND		ug/m3	20	10
Benzene	ND		ug/m3	20	10
Toluene	ND		ug/m3	20	10
Ethylbenzene	ND		ug/m3	20	10
p/m-Xylene	ND		ug/m3	40	10
o-Xylene	ND		ug/m3	20	10
Naphthalene	ND		ug/m3	20	10
C5-C8 Aliphatics, Adjusted	ND		ug/m3	120	10
C9-C12 Aliphatics, Adjusted	ND		ug/m3	140	10
C9-C10 Aromatics	ND		ug/m3	100	10

Project Name: UNIFIRST PROPERTY IA / VI
Project Number: 1-2114-2

Lab Number: L1005229
Report Date: 04/29/10

SAMPLE RESULTS

Lab ID: L1005229-36
Client ID: SV-01
Sample Location: WOBURN, MA
Matrix: Soil_Vapor
Anaytical Method: 48,TO-15-SIM
Analytical Date: 04/22/10 02:01
Analyst: AJ

Date Collected: 04/12/10 04:37
Date Received: 04/12/10
Field Prep: Not Specified

Parameter	ppbV Results	ppbV RDL	ug/m3 Results	ug/m3 RDL	Qualifier	Dilution Factor
Volatile Organics in Air by SIM - Mansfield Lab						
1,1,1-Trichloroethane	0.043	0.020	0.234	0.109		1
1,1,2-Trichloroethane	ND	0.020	ND	0.109		1
1,1-Dichloroethane	ND	0.020	ND	0.081		1
1,1-Dichloroethene	ND	0.020	ND	0.079		1
1,2,4-Trimethylbenzene	ND	0.020	ND	0.098		1
1,2-Dibromoethane	ND	0.010	ND	0.077		1
1,2-Dichloroethane	ND	0.020	ND	0.081		1
1,2-Dichloropropane	ND	0.020	ND	0.092		1
1,3-Butadiene	ND	0.020	ND	0.044		1
1,3-Dichlorobenzene	ND	0.020	ND	0.120		1
1,4-Dichlorobenzene	0.057	0.020	0.342	0.120		1
Benzene	ND	0.100	ND	0.319		1
Bromodichloromethane	ND	0.010	ND	0.067		1
Bromoform	ND	0.020	ND	0.206		1
Carbon tetrachloride	ND	0.020	ND	0.126		1
Chlorobenzene	ND	0.020	ND	0.092		1
Chloroform	0.175	0.020	0.854	0.098		1
cis-1,2-Dichloroethene	ND	0.020	ND	0.079		1
Ethylbenzene	0.020	0.020	ND	0.087		1
Methylene chloride	ND	0.500	ND	1.74		1
Methyl tert butyl ether	ND	0.020	ND	0.072		1
Naphthalene	ND	0.050	ND	0.260		1
Xylenes, Total	0.086	0.060	0.373	0.260		1
Tetrachloroethene	10.0	0.020	68.0	0.136		1
Toluene	0.137	0.050	0.516	0.188		1

Project Name: UNIFIRST PROPERTY IA / VI
Project Number: 1-2114-2
Lab Number: L1005229
Report Date: 04/29/10

SAMPLE RESULTS

Lab ID: L1005229-36
Client ID: SV-01
Sample Location: WOBURN, MA

Date Collected: 04/12/10 04:37
Date Received: 04/12/10
Field Prep: Not Specified

Parameter	ppbV Results	ppbV RDL	ug/m3 Results	ug/m3 RDL	Qualifier	Dilution Factor
Volatile Organics in Air by SIM - Mansfield Lab						
trans-1,2-Dichloroethene	ND	0.020	ND	0.079		1
trans-1,3-Dichloropropene	~~ND~~	0.020	~~ND~~	0.091	UJ	1
Trichloroethene	ND	0.020	ND	0.107		1
Vinyl chloride	ND	0.020	ND	0.051		1
Isopropylbenzene	ND	0.500	ND	2.46		1

6/15/10

Project Name: UNIFIRST PROPERTY IA / VI
Project Number: 1-2114-2

Lab Number: L1005229
Report Date: 04/29/10

SAMPLE RESULTS

Lab ID:	L1005229-36	Date Collected:	04/12/10 04:37
Client ID:	SV-01	Date Received:	04/12/10
Sample Location:	WOBURN, MA	Field Prep:	Not Specified
Matrix:	Soil_Vapor		
Analytical Method:	96,APH		
Analytical Date:	04/22/10 02:01		
Analyst:	RY		

Quality Control Information

Sample Type:	100 ml/min Composite
Sample Container Type:	Canister - 6 Liter
Sampling Flow Controller:	Mechanical
Sampling Zone:	Unknown
Sampling Flow Meter RPD of pre & post-sampling calibration check:	<=20%
Were all QA/QC procedures REQUIRED by the method followed?	Yes
Were all performance/acceptance standards for the required procedures achieved?	Yes
Were significant modifications made to the method as specified in Sect 11.1.2?	No

Parameter	Result	Qualifier	Units	RDL	Dilution Factor
Petroleum Hydrocarbons in Air - Mansfield Lab					
1,3-Butadiene	ND		ug/m3	2.0	1
Methyl tert butyl ether	ND		ug/m3	2.0	1
Benzene	ND		ug/m3	2.0	1
Toluene	ND		ug/m3	2.0	1
Ethylbenzene	ND		ug/m3	2.0	1
p/m-Xylene	ND		ug/m3	4.0	1
o-Xylene	ND		ug/m3	2.0	1
Naphthalene	ND		ug/m3	2.0	1
C5-C8 Aliphatics, Adjusted	22		ug/m3	12	1
C9-C12 Aliphatics, Adjusted	58		ug/m3	14	1
C9-C10 Aromatics	ND		ug/m3	10	1

Project Name: UNIFIRST PROPERTY IA / VI
Project Number: 1-2114-2

Lab Number: L1005229
Report Date: 04/29/10

SAMPLE RESULTS

Lab ID:	L1005229-37	Date Collected:	04/12/10 06:32
Client ID:	SV-08	Date Received:	04/12/10
Sample Location:	WOBURN, MA	Field Prep:	Not Specified
Matrix:	Soil_Vapor		
Anaytical Method:	48,TO-15-SIM		
Analytical Date:	04/22/10 07:05		
Analyst:	AJ		

Parameter	ppbV Results	ppbV RDL	ug/m3 Results	ug/m3 RDL	Qualifier	Dilution Factor
Volatile Organics in Air by SIM - Mansfield Lab						
1,1,1-Trichloroethane	0.520	0.020	2.84	0.109		1
1,1,2-Trichloroethane	ND	0.020	ND	0.109		1
1,1-Dichloroethane	ND	0.020	ND	0.081		1
1,1-Dichloroethene	ND	0.020	ND	0.079		1
1,2,4-Trimethylbenzene	ND	0.020	ND	0.098		1
1,2-Dibromoethane	ND	0.010	ND	0.077		1
1,2-Dichloroethane	ND	0.020	ND	0.081		1
1,2-Dichloropropane	ND	0.020	ND	0.092		1
1,3-Butadiene	ND	0.020	ND	0.044		1
1,3-Dichlorobenzene	ND	0.020	ND	0.120		1
1,4-Dichlorobenzene	ND	0.020	ND	0.120		1
Benzene	ND	0.100	ND	0.319		1
Bromodichloromethane	0.011	0.010	0.074	0.067		1
Bromoform	ND	0.020	ND	0.206		1
Carbon tetrachloride	0.045	0.020	0.283	0.126		1
Chlorobenzene	ND	0.020	ND	0.092		1
Chloroform	1.59	0.020	7.74	0.098		1
cis-1,2-Dichloroethene	ND	0.020	ND	0.079		1
Ethylbenzene	ND	0.020	ND	0.087		1
Methylene chloride	ND	0.500	ND	1.74		1
Methyl tert butyl ether	ND	0.020	ND	0.072		1
Naphthalene	ND	0.050	ND	0.260		1
Xylenes, Total	ND	0.060	ND	0.260		1
Tetrachloroethene	578 ~~315~~	0.477 ~~0.020~~	3920 ~~2140~~	3.23 ~~0.136~~	~~E~~	23.86 ~~1~~
Toluene	0.085	0.050	0.320	0.188		1

Project Name: UNIFIRST PROPERTY IA / VI
Project Number: 1-2114-2

Lab Number: L1005229
Report Date: 04/29/10

SAMPLE RESULTS

Lab ID: L1005229-37
Client ID: SV-08
Sample Location: WOBURN, MA

Date Collected: 04/12/10 06:32
Date Received: 04/12/10
Field Prep: Not Specified

Parameter	ppbV Results	ppbV RDL	ug/m3 Results	ug/m3 RDL	Qualifier	Dilution Factor
Volatile Organics in Air by SIM - Mansfield Lab						
trans-1,2-Dichloroethene	ND	0.020	ND	0.079		1
trans-1,3-Dichloropropene	~~ND~~	0.020	~~ND~~	0.091	UJ	1
Trichloroethene	0.046	0.020	0.247	0.107		1
Vinyl chloride	ND	0.020	ND	0.051		1
Isopropylbenzene	ND	0.500	ND	2.46		1

6/5/10

Project Name: UNIFIRST PROPERTY IA / VI
Project Number: 1-2114-2

Lab Number: L1005229
Report Date: 04/29/10

SAMPLE RESULTS

Lab ID:	L1005229-37 D2	Date Collected:	04/12/10 06:32
Client ID:	SV-08DL	Date Received:	04/12/10
Sample Location:	WOBURN, MA	Field Prep:	Not Specified
Matrix:	Soil_Vapor		
Anaytical Method:	48,TO-15-SIM		
Analytical Date:	04/22/10 12:09		
Analyst:	AJ		

	ppbV		ug/m3			
Parameter	**Results**	**RDL**	**Results**	**RDL**	**Qualifier**	**Dilution Factor**
Volatile Organics in Air by SIM - Mansfield Lab						
Tetrachloroethene	578	0.477	3920	3.23		23.86

DAC 6/15/10

Project Name: UNIFIRST PROPERTY IA / VI
Project Number: 1-2114-2

Lab Number: L1005229
Report Date: 04/29/10

SAMPLE RESULTS

Lab ID:	L1005229-37	Date Collected:	04/12/10 06:32
Client ID:	SV-08	Date Received:	04/12/10
Sample Location:	WOBURN, MA	Field Prep:	Not Specified
Matrix:	Soil_Vapor		
Analytical Method:	96,APH		
Analytical Date:	04/22/10 07:05		
Analyst:	RY		

Quality Control Information

Sample Type:	100 ml/min Composite
Sample Container Type:	Canister - 6 Liter
Sampling Flow Controller:	Mechanical
Sampling Zone:	Unknown
Sampling Flow Meter RPD of pre & post-sampling calibration check:	<=20%
Were all QA/QC procedures REQUIRED by the method followed?	Yes
Were all performance/acceptance standards for the required procedures achieved?	Yes
Were significant modifications made to the method as specified in Sect 11.1.2?	No

Parameter	Result	Qualifier	Units	RDL	Dilution Factor
Petroleum Hydrocarbons in Air - Mansfield Lab					
1,3-Butadiene	ND		ug/m3	2.0	1
Methyl tert butyl ether	ND		ug/m3	2.0	1
Benzene	ND		ug/m3	2.0	1
Toluene	ND		ug/m3	2.0	1
Ethylbenzene	ND		ug/m3	2.0	1
p/m-Xylene	ND		ug/m3	4.0	1
o-Xylene	ND		ug/m3	2.0	1
Naphthalene	ND		ug/m3	2.0	1
C5-C8 Aliphatics, Adjusted	46		ug/m3	12	1
C9-C12 Aliphatics, Adjusted	86		ug/m3	14	1
C9-C10 Aromatics	ND		ug/m3	10	1

Project Name: UNIFIRST PROPERTY IA / VI
Project Number: 1-2114-2

Lab Number: L1005229
Report Date: 04/29/10

SAMPLE RESULTS

Lab ID: L1005229-38
Client ID: TRIP BLANK
Sample Location: WOBURN, MA
Matrix: Air
Anaytical Method: 48,TO-15-SIM
Analytical Date: 04/22/10 01:22
Analyst: AJ

Date Collected:
Date Received: 04/12/10
Field Prep: Not Specified

Parameter	ppbV Results	ppbV RDL	ug/m3 Results	ug/m3 RDL	Qualifier	Dilution Factor
Volatile Organics in Air by SIM - Mansfield Lab						
1,1,1-Trichloroethane	ND	0.020	ND	0.109		1
1,1,2-Trichloroethane	ND	0.020	ND	0.109		1
1,1-Dichloroethane	ND	0.020	ND	0.081		1
1,1-Dichloroethene	ND	0.020	ND	0.079		1
1,2,4-Trimethylbenzene	ND	0.020	ND	0.098		1
1,2-Dibromoethane	ND	0.010	ND	0.077		1
1,2-Dichloroethane	ND	0.020	ND	0.081		1
1,2-Dichloropropane	ND	0.020	ND	0.092		1
1,3-Butadiene	ND	0.020	ND	0.044		1
1,3-Dichlorobenzene	ND	0.020	ND	0.120		1
1,4-Dichlorobenzene	ND	0.020	ND	0.120		1
Benzene	ND	0.100	ND	0.319		1
Bromodichloromethane	ND	0.010	ND	0.067		1
Bromoform	ND	0.020	ND	0.206		1
Carbon tetrachloride	ND	0.020	ND	0.126		1
Chlorobenzene	ND	0.020	ND	0.092		1
Chloroform	ND	0.020	ND	0.098		1
cis-1,2-Dichloroethene	ND	0.020	ND	0.079		1
Ethylbenzene	ND	0.020	ND	0.087		1
Methylene chloride	ND	0.500	ND	1.74		1
Methyl tert butyl ether	ND	0.020	ND	0.072		1
Naphthalene	ND	0.050	ND	0.260		1
Xylenes, Total	ND	0.060	ND	0.260		1
Tetrachloroethene	0.108	0.020	0.732	0.136		1
Toluene	ND	0.050	ND	0.188		1

Project Name: UNIFIRST PROPERTY IA / VI
Project Number: 1-2114-2

Lab Number: L1005229
Report Date: 04/29/10

SAMPLE RESULTS

Lab ID: L1005229-38
Client ID: TRIP BLANK
Sample Location: WOBURN, MA

Date Collected:
Date Received: 04/12/10
Field Prep: Not Specified

Parameter	ppbV Results	ppbV RDL	ug/m3 Results	ug/m3 RDL	Qualifier	Dilution Factor
Volatile Organics in Air by SIM - Mansfield Lab						
trans-1,2-Dichloroethene	ND	0.020	ND	0.079		1
trans-1,3-Dichloropropene	~~ND~~	0.020	~~ND~~	0.091	UJ	1
Trichloroethene	ND	0.020	ND	0.107		1
Vinyl chloride	ND	0.020	ND	0.051		1
Isopropylbenzene	ND	0.500	ND	2.46		1

6/5/10

Project Name: UNIFIRST PROPERTY IA / VI
Project Number: 1-2114-2

Lab Number: L1005229
Report Date: 04/29/10

SAMPLE RESULTS

Lab ID:	L1005229-38	Date Collected:	
Client ID:	TRIP BLANK	Date Received:	04/12/10
Sample Location:	WOBURN, MA	Field Prep:	Not Specified
Matrix:	Air		
Analytical Method:	96,APH		
Analytical Date:	04/22/10 01:22		
Analyst:	RY		

Quality Control Information

Sample Type:	Trip Blank
Sample Container Type:	Canister - 6 Liter
Sampling Flow Controller:	Mechanical
Sampling Zone:	Unknown
Sampling Flow Meter RPD of pre & post-sampling calibration check:	<=20%
Were all QA/QC procedures REQUIRED by the method followed?	Yes
Were all performance/acceptance standards for the required procedures achieved?	Yes
Were significant modifications made to the method as specified in Sect 11.1.2?	No

Parameter	Result	Qualifier	Units	RDL	Dilution Factor
Petroleum Hydrocarbons in Air - Mansfield Lab					
1,3-Butadiene	ND		ug/m3	2.0	1
Methyl tert butyl ether	ND		ug/m3	2.0	1
Benzene	ND		ug/m3	2.0	1
Toluene	ND		ug/m3	2.0	1
Ethylbenzene	ND		ug/m3	2.0	1
p/m-Xylene	ND		ug/m3	4.0	1
o-Xylene	ND		ug/m3	2.0	1
Naphthalene	ND		ug/m3	2.0	1
C5-C8 Aliphatics, Adjusted	ND		ug/m3	12	1
C9-C12 Aliphatics, Adjusted	14		ug/m3	14	1
C9-C10 Aromatics	ND		ug/m3	10	1

Project Name: UNIFIRST PROPERTY IA / VI
Project Number: 1-2114-2

Lab Number: L1005229
Report Date: 04/29/10

SAMPLE RESULTS

Lab ID: L1005229-39 D
Client ID: SV-06
Sample Location: WOBURN, MA
Matrix: Soil_Vapor
Anaytical Method: 48,TO-15-SIM
Analytical Date: 04/23/10 05:30
Analyst: AJ

Date Collected: 04/12/10 05:22
Date Received: 04/12/10
Field Prep: Not Specified

Parameter	ppbV Results	ppbV RDL	ug/m3 Results	ug/m3 RDL	Qualifier	Dilution Factor
Volatile Organics in Air by SIM - Mansfield Lab						
1,1,1-Trichloroethane	265	0.200	1440	1.09		10
1,1,2-Trichloroethane	ND	0.200	ND	1.09		10
1,1-Dichloroethane	0.200	0.200	0.809	0.809		10
1,1-Dichloroethene	0.220	0.200	0.872	0.792		10
1,2,4-Trimethylbenzene	0.340	0.200	1.67	0.982		10
1,2-Dibromoethane	ND	0.100	ND	0.768		10
1,2-Dichloroethane	ND	0.200	ND	0.809		10
1,2-Dichloropropane	ND	0.200	ND	0.924		10
1,3-Butadiene	ND	0.200	ND	0.442		10
1,3-Dichlorobenzene	ND	0.200	ND	1.20		10
1,4-Dichlorobenzene	ND	0.200	ND	1.20		10
Benzene	ND	1.00	ND	3.19		10
Bromodichloromethane	ND	0.100	ND	0.670		10
Bromoform	ND	0.200	ND	2.06		10
Carbon tetrachloride	ND	0.200	ND	1.26		10
Chlorobenzene	0.330	0.200	1.52	0.920		10
Chloroform	3.41	0.200	16.6	0.976		10
cis-1,2-Dichloroethene	ND	0.200	ND	0.792		10
Ethylbenzene	ND	0.200	ND	0.868		10
Methylene chloride	ND	5.00	ND	17.4		10
Methyl tert butyl ether	ND	0.200	ND	0.720		10
Naphthalene	ND	0.500	ND	2.62		10
Xylenes, Total	ND	0.600	ND	2.60		10
Tetrachloroethene	~~8920~~ 62000	~~0.200~~ 56.4	~~60400~~ 420000	~~1.36~~ 382	~~E~~	~~10~~ 2822
Toluene	ND	0.500	ND	1.88		10

6/15/10

Project Name: UNIFIRST PROPERTY IA / VI
Project Number: 1-2114-2

Lab Number: L1005229
Report Date: 04/29/10

SAMPLE RESULTS

Lab ID: L1005229-39 D
Client ID: SV-06
Sample Location: WOBURN, MA

Date Collected: 04/12/10 05:22
Date Received: 04/12/10
Field Prep: Not Specified

Parameter	ppbV Results	ppbV RDL	ug/m3 Results	ug/m3 RDL	Qualifier	Dilution Factor
Volatile Organics in Air by SIM - Mansfield Lab						
trans-1,2-Dichloroethene	ND	0.200	ND	0.792		10
trans-1,3-Dichloropropene	~~ND~~	0.200	~~ND~~	0.907	UJ	10
Trichloroethene	97.2	0.200	522	1.07		10
Vinyl chloride	ND	0.200	ND	0.511		10
Isopropylbenzene	ND	5.00	ND	24.6		10

6/5/10

Project Name: UNIFIRST PROPERTY IA / VI
Project Number: 1-2114-2

Lab Number: L1005229
Report Date: 04/29/10

SAMPLE RESULTS

Lab ID:	L1005229-39 D2	Date Collected:	04/12/10 05:22
Client ID:	SV-06 DL	Date Received:	04/12/10
Sample Location:	WOBURN, MA	Field Prep:	Not Specified
Matrix:	Soil_Vapor		
Anaytical Method:	48,TO-15-SIM		
Analytical Date:	04/26/10 17:02		
Analyst:	AJ		

Parameter	ppbV Results	ppbV RDL	ug/m3 Results	ug/m3 RDL	Qualifier	Dilution Factor
Volatile Organics in Air by SIM - Mansfield Lab						
Tetrachloroethene	62000	56.4	420000	382		2822

BKG 6/5/10

Project Name: UNIFIRST PROPERTY IA / VI
Project Number: 1-2114-2

Lab Number: L1005229
Report Date: 04/29/10

SAMPLE RESULTS

Lab ID:	L1005229-39	D	Date Collected:	04/12/10 05:22
Client ID:	SV-06		Date Received:	04/12/10
Sample Location:	WOBURN, MA		Field Prep:	Not Specified
Matrix:	Soil_Vapor			
Analytical Method:	96,APH			
Analytical Date:	04/23/10 05:30			
Analyst:	RY			

Quality Control Information

Sample Type:	100 ml/min Composite
Sample Container Type:	Canister - 6 Liter
Sampling Flow Controller:	Mechanical
Sampling Zone:	Unknown
Sampling Flow Meter RPD of pre & post-sampling calibration check:	<=20%
Were all QA/QC procedures REQUIRED by the method followed?	Yes
Were all performance/acceptance standards for the required procedures achieved?	Yes
Were significant modifications made to the method as specified in Sect 11.1.2?	No

Parameter	Result	Qualifier	Units	RDL	Dilution Factor
Petroleum Hydrocarbons in Air - Mansfield Lab					
1,3-Butadiene	ND		ug/m3	20	10
Methyl tert butyl ether	ND		ug/m3	20	10
Benzene	ND		ug/m3	20	10
Toluene	ND		ug/m3	20	10
Ethylbenzene	ND		ug/m3	20	10
p/m-Xylene	ND		ug/m3	40	10
o-Xylene	ND		ug/m3	20	10
Naphthalene	ND		ug/m3	20	10
C5-C8 Aliphatics, Adjusted	ND		ug/m3	120	10
C9-C12 Aliphatics, Adjusted	ND		ug/m3	140	10
C9-C10 Aromatics	ND		ug/m3	100	10

Project Name: UNIFIRST PROPERTY IA / VI
Project Number: 1-2114-2
Lab Number: L1005229
Report Date: 04/29/10

SAMPLE RESULTS

Lab ID: L1005229-40 D
Client ID: SV-02
Sample Location: WOBURN, MA
Matrix: Soil_Vapor
Anaytical Method: 48,TO-15-SIM
Analytical Date: 04/22/10 04:34
Analyst: AJ

Date Collected: 04/12/10 07:55
Date Received: 04/12/10
Field Prep: Not Specified

Parameter	ppbV Results	ppbV RDL	ug/m3 Results	ug/m3 RDL	Qualifier	Dilution Factor
Volatile Organics in Air by SIM - Mansfield Lab						
1,1,1-Trichloroethane	0.123	0.055	0.670	0.298		2.733
1,1,2-Trichloroethane	ND	0.055	ND	0.298		2.733
1,1-Dichloroethane	ND	0.055	ND	0.221		2.733
1,1-Dichloroethene	ND	0.055	ND	0.216		2.733
1,2,4-Trimethylbenzene	0.169	0.055	0.832	0.268		2.733
1,2-Dibromoethane	ND	0.027	ND	0.210		2.733
1,2-Dichloroethane	ND	0.055	ND	0.221		2.733
1,2-Dichloropropane	ND	0.055	ND	0.252		2.733
1,3-Butadiene	ND	0.055	ND	0.121		2.733
1,3-Dichlorobenzene	ND	0.055	ND	0.328		2.733
1,4-Dichlorobenzene	0.191	0.055	1.15	0.328		2.733
Benzene	0.273	0.273	0.872	0.872		2.733
Bromodichloromethane	ND	0.027	ND	0.183		2.733
Bromoform	ND	0.055	ND	0.564		2.733
Carbon tetrachloride	ND	0.055	ND	0.344		2.733
Chlorobenzene	ND	0.055	ND	0.251		2.733
Chloroform	0.205	0.055	1.00	0.267		2.733
cis-1,2-Dichloroethene	ND	0.055	ND	0.216		2.733
Ethylbenzene	0.123	0.055	0.534	0.237		2.733
Methylene chloride	ND	1.37	ND	4.74		2.733
Methyl tert butyl ether	0.071	0.055	0.256	0.197		2.733
Naphthalene	0.202	0.137	1.06	0.720		2.733
Xylenes, Total	0.664	0.164	2.88	0.711		2.733
Tetrachloroethene	136	0.055	923	0.370		2.733
Toluene	0.825	0.137	3.11	0.514		2.733

Project Name: UNIFIRST PROPERTY IA / VI
Project Number: 1-2114-2

Lab Number: L1005229
Report Date: 04/29/10

SAMPLE RESULTS

Lab ID: L1005229-40 D
Client ID: SV-02
Sample Location: WOBURN, MA

Date Collected: 04/12/10 07:55
Date Received: 04/12/10
Field Prep: Not Specified

Parameter	ppbV Results	ppbV RDL	ug/m3 Results	ug/m3 RDL	Qualifier	Dilution Factor
Volatile Organics in Air by SIM - Mansfield Lab						
trans-1,2-Dichloroethene	ND	0.055	ND	0.216		2.733
trans-1,3-Dichloropropene	~~ND~~	0.055	~~ND~~	0.248	UJ	2.733
Trichloroethene	ND	0.055	ND	0.293		2.733
Vinyl chloride	ND	0.055	ND	0.140		2.733
Isopropylbenzene	ND	1.37	ND	6.71		2.733

6/5/10

Project Name: *UNIFIRST PROPERTY IA / VI*
Project Number: 1-2114-2

Lab Number: L1005229
Report Date: 04/29/10

SAMPLE RESULTS

Lab ID:	L1005229-40	D	Date Collected:	04/12/10 07:55
Client ID:	SV-02		Date Received:	04/12/10
Sample Location:	WOBURN, MA		Field Prep:	Not Specified
Matrix:	Soil_Vapor			
Analytical Method:	96,APH			
Analytical Date:	04/22/10 04:34			
Analyst:	RY			

Quality Control Information

Sample Type:	100 ml/min Composite
Sample Container Type:	Canister - 6 Liter
Sampling Flow Controller:	Mechanical
Sampling Zone:	Unknown
Sampling Flow Meter RPD of pre & post-sampling calibration check:	<=20%
Were all QA/QC procedures REQUIRED by the method followed?	Yes
Were all performance/acceptance standards for the required procedures achieved?	Yes
Were significant modifications made to the method as specified in Sect 11.1.2?	No

Parameter	Result	Qualifier	Units	RDL	Dilution Factor
Petroleum Hydrocarbons in Air - Mansfield Lab					
1,3-Butadiene	ND		ug/m3	5.4	2.7
Methyl tert butyl ether	ND		ug/m3	5.4	2.7
Benzene	ND		ug/m3	5.4	2.7
Toluene	ND		ug/m3	5.4	2.7
Ethylbenzene	ND		ug/m3	5.4	2.7
p/m-Xylene	ND		ug/m3	11	2.7
o-Xylene	ND		ug/m3	5.4	2.7
Naphthalene	ND		ug/m3	5.4	2.7
C5-C8 Aliphatics, Adjusted	120		ug/m3	32	2.7
C9-C12 Aliphatics, Adjusted	490		ug/m3	38	2.7
C9-C10 Aromatics	ND		ug/m3	27	2.7

Project Name: UNIFIRST PROPERTY IA / VI
Project Number: 1-2114-2

Lab Number: L1005229
Report Date: 04/29/10

SAMPLE RESULTS

Lab ID: L1005229-41 D
Client ID: SV-11
Sample Location: WOBURN, MA
Matrix: Soil_Vapor
Anaytical Method: 48,TO-15-SIM
Analytical Date: 04/23/10 00:36
Analyst: AJ

Date Collected: 04/12/10 06:02
Date Received: 04/12/10
Field Prep: Not Specified

Parameter	ppbV Results	ppbV RDL	ug/m3 Results	ug/m3 RDL	Qualifier	Dilution Factor
Volatile Organics in Air by SIM - Mansfield Lab						
1,1,1-Trichloroethane	15.7	0.200	85.8	1.09		10
1,1,2-Trichloroethane	ND	0.200	ND	1.09		10
1,1-Dichloroethane	0.340	0.200	1.38	0.809		10
1,1-Dichloroethene	ND	0.200	ND	0.792		10
1,2,4-Trimethylbenzene	ND	0.200	ND	0.982		10
1,2-Dibromoethane	ND	0.100	ND	0.768		10
1,2-Dichloroethane	ND	0.200	ND	0.809		10
1,2-Dichloropropane	ND	0.200	ND	0.924		10
1,3-Butadiene	ND	0.200	ND	0.442		10
1,3-Dichlorobenzene	ND	0.200	ND	1.20		10
1,4-Dichlorobenzene	ND	0.200	ND	1.20		10
Benzene	ND	1.00	ND	3.19		10
Bromodichloromethane	ND	0.100	ND	0.670		10
Bromoform	ND	0.200	ND	2.06		10
Carbon tetrachloride	ND	0.200	ND	1.26		10
Chlorobenzene	ND	0.200	ND	0.920		10
Chloroform	0.300	0.200	1.46	0.976		10
cis-1,2-Dichloroethene	62.7	0.200	248	0.792		10
Ethylbenzene	ND	0.200	ND	0.868		10
Methylene chloride	ND	5.00	ND	17.4		10
Methyl tert butyl ether	ND	0.200	ND	0.720		10
Naphthalene	ND	0.500	ND	2.62		10
Xylenes, Total	ND	0.600	ND	2.60		10
Tetrachloroethene	3770 ~~3070~~	2.49 ~~0.200~~	25500 ~~20800~~	16.8 ~~1.36~~	E	124.3 ~~10~~
Toluene	ND	0.500	ND	1.88		10

DKG 6/8/10

Project Name: UNIFIRST PROPERTY IA / VI
Project Number: 1-2114-2

Lab Number: L1005229
Report Date: 04/29/10

SAMPLE RESULTS

Lab ID: L1005229-41 D
Client ID: SV-11
Sample Location: WOBURN, MA

Date Collected: 04/12/10 06:02
Date Received: 04/12/10
Field Prep: Not Specified

Parameter	ppbV Results	ppbV RDL	ug/m3 Results	ug/m3 RDL	Qualifier	Dilution Factor
Volatile Organics in Air by SIM - Mansfield Lab						
trans-1,2-Dichloroethene	0.460	0.200	1.82	0.792		10
trans-1,3-Dichloropropene	~~ND~~	0.200	~~ND~~	0.907	UJ	10
Trichloroethene	106	0.200	569	1.07		10
Vinyl chloride	ND	0.200	ND	0.511		10
Isopropylbenzene	ND	5.00	ND	24.6		10

TAG 6/5/10

Project Name: UNIFIRST PROPERTY IA / VI
Project Number: 1-2114-2

Lab Number: L1005229
Report Date: 04/29/10

SAMPLE RESULTS

Lab ID:	L1005229-41 D2	Date Collected:	04/12/10 06:02
Client ID:	SV-11 DL	Date Received:	04/12/10
Sample Location:	WOBURN, MA	Field Prep:	Not Specified
Matrix:	Soil_Vapor		
Anaytical Method:	48,TO-15-SIM		
Analytical Date:	04/23/10 22:04		
Analyst:	AJ		

	ppbV		ug/m3			
Parameter	**Results**	**RDL**	**Results**	**RDL**	**Qualifier**	**Dilution Factor**
Volatile Organics in Air by SIM - Mansfield Lab						
Tetrachloroethene	3770	2.49	25500	16.8		124.3

DNG 6/5/10

Project Name: UNIFIRST PROPERTY IA / VI **Lab Number:** L1005229

Project Number: 1-2114-2 **Report Date:** 04/29/10

SAMPLE RESULTS

Lab ID:	L1005229-41	D	Date Collected:	04/12/10 06:02
Client ID:	SV-11		Date Received:	04/12/10
Sample Location:	WOBURN, MA		Field Prep:	Not Specified
Matrix:	Soil_Vapor			
Analytical Method:	96,APH			
Analytical Date:	04/23/10 00:36			
Analyst:	RY			

Quality Control Information

Sample Type:	100 ml/min Composite
Sample Container Type:	Canister - 6 Liter
Sampling Flow Controller:	Mechanical
Sampling Zone:	Unknown
Sampling Flow Meter RPD of pre & post-sampling calibration check:	<=20%
Were all QA/QC procedures REQUIRED by the method followed?	Yes
Were all performance/acceptance standards for the required procedures achieved?	Yes
Were significant modifications made to the method as specified in Sect 11.1.2?	No

Parameter	Result	Qualifier	Units	RDL	Dilution Factor
Petroleum Hydrocarbons in Air - Mansfield Lab					
1,3-Butadiene	ND		ug/m3	20	10
Methyl tert butyl ether	ND		ug/m3	20	10
Benzene	ND		ug/m3	20	10
Toluene	ND		ug/m3	20	10
Ethylbenzene	ND		ug/m3	20	10
p/m-Xylene	ND		ug/m3	40	10
o-Xylene	ND		ug/m3	20	10
Naphthalene	ND		ug/m3	20	10
C5-C8 Aliphatics, Adjusted	ND		ug/m3	120	10
C9-C12 Aliphatics, Adjusted	ND		ug/m3	140	10
C9-C10 Aromatics	ND		ug/m3	100	10

ATTACHMENT C

REVISED CLP-LIKE FORM 1s (6/4/10)
SDG No. L1005229
Selected Volatiles and Petroleum Hydrocarbons in Air Samples

1A
VOLATILE ANALYSIS DATA SHEET

CLIENT SAMPLE NO.

IA-10

Lab Name: Alpha Analytical Labs

SDG No.: L1005229

GC Column: RTX-1

Matrix: (soil/water) AIR

Lab Sample ID: L1005229-21

Sample wt/vol: 250. (g/mL) ml

Lab File ID: R210796

Level: (low/med) LOW

Date Received: 04/12/10

%Solids:

Date Analyzed: 04/21/10 14:05

Dilution Factor: 1

Soil Extract Volume: (uL)

Soil Aliquot Volume: (uL)

CAS NO.	COMPOUND	CONC. UNITS: ppbV	Q
71-55-6	1,1,1-Trichloroethane	0.068	
79-00-5	1,1,2-Trichloroethane	0.020	U
75-34-3	1,1-Dichloroethane	0.020	U
75-35-4	1,1-Dichloroethene	0.020	U
95-63-6	1,2,4-Trimethylbenzene	0.225	
106-93-4	1,2-Dibromoethane	0.010	U
107-06-2	1,2-Dichloroethane	0.206	
78-87-5	1,2-Dichloropropane	0.020	U
106-99-0	1,3-Butadiene	0.020	U
541-73-1	1,3-Dichlorobenzene	0.020	U
106-46-7	1,4-Dichlorobenzene	1.01	
71-43-2	Benzene	0.270	
75-27-4	Bromodichloromethane	0.010	U
75-25-2	Bromoform	0.020	U
56-23-5	Carbon tetrachloride	0.070	
108-90-7	Chlorobenzene	0.020	U
67-66-3	Chloroform	0.029	
156-59-2	cis-1,2-Dichloroethene	0.024	
100-41-4	Ethylbenzene	0.185	
75-09-2	Methylene chloride	1.10	
1634-04-4	Methyl tert butyl ether	0.069	
91-20-3	Naphthalene	0.822	
1330-20-7	Xylenes, Total	0.685	
127-18-4	Tetrachloroethene	4.13	
108-88-3	Toluene	3.15	
156-60-5	trans-1,2-Dichloroethene	0.020	U
10061-02-6	trans-1,3-Dichloropropene	0.020	U
79-01-6	Trichloroethene	0.041	
75-01-4	Vinyl chloride	0.020	U
98-82-8	Isopropylbenzene	0.500	U

1A
VOLATILE ANALYSIS DATA SHEET

CLIENT SAMPLE NO.

SV-DUP01 D

Lab Name: Alpha Analytical Labs

SDG No.: L1005229

GC Column: RTX-1

Matrix: (soil/water) AIR

Lab Sample ID: L1005229-27D

Sample wt/vol: 25.0 (g/mL) ml

Lab File ID: R210844

Level: (low/med) LOW

Date Received: 04/12/10

%Solids:

Date Analyzed: 04/23/10 03:03

Dilution Factor: 10

Soil Extract Volume: (uL)

Soil Aliquot Volume: (uL)

CAS NO.	COMPOUND	CONC. UNITS: ppbV	Q
71-55-6	1,1,1-Trichloroethane	68.5	
79-00-5	1,1,2-Trichloroethane	0.200	U
75-34-3	1,1-Dichloroethane	2.28	
75-35-4	1,1-Dichloroethene	0.530	
95-63-6	1,2,4-Trimethylbenzene	0.200	U
106-93-4	1,2-Dibromoethane	0.100	U
107-06-2	1,2-Dichloroethane	0.200	U
78-87-5	1,2-Dichloropropane	0.200	U
106-99-0	1,3-Butadiene	0.200	U
541-73-1	1,3-Dichlorobenzene	0.200	U
106-46-7	1,4-Dichlorobenzene	0.200	U
71-43-2	Benzene	1.00	U
75-27-4	Bromodichloromethane	0.100	U
75-25-2	Bromoform	0.200	U
56-23-5	Carbon tetrachloride	0.200	U
108-90-7	Chlorobenzene	0.420	
67-66-3	Chloroform	3.27	
156-59-2	cis-1,2-Dichloroethene	1.69	
100-41-4	Ethylbenzene	0.200	U
75-09-2	Methylene chloride	5.00	U
1634-04-4	Methyl tert butyl ether	0.200	U
91-20-3	Naphthalene	0.500	U
1330-20-7	Xylenes, Total	0.600	U
127-18-4	Tetrachloroethene	6660	E
108-88-3	Toluene	.500	U
156-60-5	trans-1,2-Dichloroethene	0.260	
10061-02-6	trans-1,3-Dichloropropene	0.200	U
79-01-6	Trichloroethene	27.6	
75-01-4	Vinyl chloride	0.200	U
98-82-8	Isopropylbenzene	5.00	U

1A
VOLATILE ANALYSIS DATA SHEET

CLIENT SAMPLE NO.

SV-DUP02 D

Lab Name: Alpha Analytical Labs

SDG No.: L1005229

GC Column: RTX-1

Matrix: (soil/water) AIR

Lab Sample ID: L1005229-34D

Sample wt/vol: 26.6 (g/mL) ml

Lab File ID: R210841

Level: (low/med) LOW

Date Received: 04/12/10

%Solids:

Date Analyzed: 04/23/10 01:14

Dilution Factor: 9.404

Soil Extract Volume: (uL)

Soil Aliquot Volume: (uL)

CAS NO.	COMPOUND	CONC. UNITS: ppbV	Q
71-55-6	1,1,1-Trichloroethane	12.4	
79-00-5	1,1,2-Trichloroethane	0.188	U
75-34-3	1,1-Dichloroethane	0.263	
75-35-4	1,1-Dichloroethene	0.188	U
95-63-6	1,2,4-Trimethylbenzene	0.188	U
106-93-4	1,2-Dibromoethane	0.094	U
107-06-2	1,2-Dichloroethane	0.188	U
78-87-5	1,2-Dichloropropane	0.188	U
106-99-0	1,3-Butadiene	0.188	U
541-73-1	1,3-Dichlorobenzene	0.188	U
106-46-7	1,4-Dichlorobenzene	0.188	U
71-43-2	Benzene	0.940	U
75-27-4	Bromodichloromethane	0.094	U
75-25-2	Bromoform	0.188	U
56-23-5	Carbon tetrachloride	0.188	U
108-90-7	Chlorobenzene	0.188	U
67-66-3	Chloroform	0.367	
156-59-2	cis-1,2-Dichloroethene	49.1	
100-41-4	Ethylbenzene	0.188	U
75-09-2	Methylene chloride	4.70	U
1634-04-4	Methyl tert butyl ether	0.188	U
91-20-3	Naphthalene	0.470	U
1330-20-7	Xylenes, Total	0.564	U
127-18-4	Tetrachloroethene	2660	E
108-88-3	Toluene	.470	U
156-60-5	trans-1,2-Dichloroethene	0.348	
10061-02-6	trans-1,3-Dichloropropene	0.188	U
79-01-6	Trichloroethene	83.6	
75-01-4	Vinyl chloride	0.188	U
98-82-8	Isopropylbenzene	4.70	U

1A
VOLATILE ANALYSIS DATA SHEET

CLIENT SAMPLE NO.

SV-06 D

Lab Name: Alpha Analytical Labs

SDG No.: L1005229

GC Column: RTX-1

Matrix: (soil/water) AIR

Lab Sample ID: L1005229-39D

Sample wt/vol: 25.0 (g/mL) ml

Lab File ID: R210848

Level: (low/med) LOW

Date Received: 04/12/10

%Solids:

Date Analyzed: 04/23/10 05:30

Dilution Factor: 10

Soil Extract Volume: (uL)

Soil Aliquot Volume: (uL)

CAS NO.	COMPOUND	CONC. UNITS: ppbV	Q
71-55-6	1,1,1-Trichloroethane	265	
79-00-5	1,1,2-Trichloroethane	0.200	U
75-34-3	1,1-Dichloroethane	0.200	
75-35-4	1,1-Dichloroethene	0.220	
95-63-6	1,2,4-Trimethylbenzene	0.340	
106-93-4	1,2-Dibromoethane	0.100	U
107-06-2	1,2-Dichloroethane	0.200	U
78-87-5	1,2-Dichloropropane	0.200	U
106-99-0	1,3-Butadiene	0.200	U
541-73-1	1,3-Dichlorobenzene	0.200	U
106-46-7	1,4-Dichlorobenzene	0.200	U
71-43-2	Benzene	1.00	U
75-27-4	Bromodichloromethane	0.100	U
75-25-2	Bromoform	0.200	U
56-23-5	Carbon tetrachloride	0.200	U
108-90-7	Chlorobenzene	0.330	
67-66-3	Chloroform	3.41	
156-59-2	cis-1,2-Dichloroethene	0.200	U
100-41-4	Ethylbenzene	0.200	U
75-09-2	Methylene chloride	5.00	U
1634-04-4	Methyl tert butyl ether	0.200	U
91-20-3	Naphthalene	0.500	U
1330-20-7	Xylenes, Total	0.600	U
127-18-4	Tetrachloroethene	8920	E
108-88-3	Toluene	.500	U
156-60-5	trans-1,2-Dichloroethene	0.200	U
10061-02-6	trans-1,3-Dichloropropene	0.200	U
79-01-6	Trichloroethene	97.2	
75-01-4	Vinyl chloride	0.200	U
98-82-8	Isopropylbenzene	5.00	U

APPENDIX E

PRELIMINARY RISK ASSESSMENT REPORT

REPOSITORY TARGET SHEET

US EPA New England
Superfund Document Management System /
RCRA Document Management System
Native Files Target Sheet

SDMS / RDMS Document ID #: 474232

Site Name: WELLS G&H

File Break: _____

File Type(s) Attached Specify below (Example: Excel file or .jpg):

.csv

Document Type this Target Sheet Represents:

- [ ] Map
- [ ] Photograph
- [ ] Graph/Chart
- [ ] Video
- [✔] Compact Disc
- [ ] Other (Specify below)

APPENDIX E - PRELIMINARY RISK ASSESSMENT REPORT

Description or Comments:
Attachment A Electronic Analytical Data Table L1005229_gis_DV_fr.csv

To view the attached files, click on the "Attachment Panel"

** Please note to view attachments the software corresponding with the specified file type is necessary. **

For any additional assistance please contact the EPA New England Office of Site Remediation and Restoration Records and Information Center-
Telephone (617) 918 1440

ARCADIS
Infrastructure, environment, buildings

Imagine the result

UniFirst Corporation

Appendix E

Preliminary Risk Assessment Report

15 Olympia Avenue, Woburn, MA

June 2010

ARCADIS

Appendix E
Preliminary Risk Assessment Report

15 Olympia Avenue, Woburn, MA

Brian Magee, Ph.D.
Vice President, Principal Toxicologist
Global Human Health Risk Assessment Lead

Prepared for:
UniFirst Corporation

Prepared by:
ARCADIS U.S., Inc.
2 Executive Drive
Suite 303
Chelmsford
Massachusetts 01824
Tel 978.937.9999
Fax 978.937.7555

Our Ref.:
MA000989.001.00001

Date:
June 17, 2010

This document is intended only for the use of the individual or entity for which it was prepared and may contain information that is privileged, confidential and exempt from disclosure under applicable law. Any dissemination, distribution or copying of this document is strictly prohibited.

ARCADIS

Appendix E
Preliminary Risk Assessment Report

15 Olympia Avenue,
Woburn, MA

1. Introduction **1**

2. Comparison to Acute Exposure Criteria **1**

3. Exposure assumptions **1**

4. Results **3**

4.1 Current Commercial/Industrial Worker Scenario (Short-Term) 3

4.2 Current Commercial/Industrial Worker Scenario (Long-Term) 3

4.3 Current Storage Unit User Scenario (Short-Term) 3

4.4 Current Storage Unit User Scenario (Long-Term) 4

4.5 Hypothetical Future Resident Scenario (Long-Term) 4

5. Conclusions and Recommendations **4**

6. References **6**

Tables

1. Acute and Occupational Exposure Criteria for COPCs in Indoor Air

2. Exposure Assumptions for the Estimation of Risks from Inhalation of Volatile Constituents in Indoor Air

3. Summary of Estimated Indoor Air Risks for Short-Term Exposures (MADEP Imminent Hazard Evaluation) for Current Commercial/Industrial Workers

4. Summary of Estimated Indoor Air Risks for Long-Term Exposures for Current Commercial/Industrial Workers

5. Summary of Estimated Indoor Air Risks for Short-Term Exposures (MADEP Imminent Hazard Evaluation) for Current Storage Unit Users

6. Summary of Estimated Indoor Air Risks for Long-Term Exposures for Current Storage Unit Users

7. Summary of Estimated Indoor Air Risks for Long-Term Exposures for Hypothetical Future Residents

1. Introduction

ARCADIS U.S., Inc. (ARCADIS) has prepared a preliminary human health risk assessment based upon validated indoor air data presented in Table 3 of the Indoor Air Quality and Vapor Intrusion Assessment: Report of Results from samples collected on April 12, 2010 at 15 Olympia Avenue, Woburn, MA. The list of compounds of potential concern (COPCs) is in accordance with Table 1 of the Indoor Air Quality and Vapor Intrusion Assessment Scope of Work submitted to the U.S. Environmental Protection Agency (USEPA) in March 2010 and Table 2 of Indoor Air Quality and Vapor Intrusion Assessment: Report of Results. COPCs that were not detected in any sample were not considered in the risk assessment.

2. Comparison to Acute Exposure Criteria

In order to screen for potential near-term human health hazards, indoor air data were compared to two sets of acute exposure criteria, including Acute Minimal Risk Levels (MRLs) and Acute Exposure Guideline Levels (AEGLs). In addition, indoor air data were compared to occupational criteria, including Permissible Exposure Limits (PELs) and Threshold Limit Values (TLVs®) (Table 1). Acute inhalation MRLs are derived by the Agency for Toxic Substances and Disease Registry (ATSDR) for noncarcinogenic effects from exposures lasting 14 days or less. AEGLs are set by USEPA for infrequent or one-time exposures to airborne compounds. An 8-hour AEGL-1 represents a concentration above which it is expected that the general population could experience significant but reversible irritation or discomfort. PELs are federal standards enforceable by the Occupational Safety and Health Administration (OSHA) for an 8-hour time-weighted average occupational exposure. TLVs® are 8-hour time-weighted averages proposed by the American Conference of Governmental Industrial Hygienists (ACGIH) for occupational hazard assessment. If no acute exposure criteria or occupational criteria were available for a given compound, surrogate values were used where appropriate (Table 1). Comparisons were based on individual samples without averaging of field duplicates (i.e, assuming that an individual person would consistently remain at the sample location throughout the relevant exposure period).

No result exceeded acute exposure criteria. Thus, acute indoor air exposures to the COPCs would not pose significant risks of harm to human health.

3. Exposure assumptions

Risks from inhalation of volatile organic compounds in indoor air were estimated for a current commercial/industrial worker and a current storage unit user for both long- and short-term exposures; and for a hypothetical future resident for long-term exposures. Exposure assumptions

were based on current USEPA guidance (USEPA 2009a,b) and discussions with project staff knowledgeable of building use patterns (Table 2). In accordance with USEPA guidance, long-term exposure was defined as 25 years for a commercial/industrial worker or storage user and 30 years for a hypothetical future resident. The short-term exposure was performed for a five-year exposure in accordance with the Massachusetts Department of Environmental Protection (MADEP) guidance for Imminent Hazard (IH) evaluations to determine if an IH condition existed as defined in the Massachusetts Contingency Plan (MCP) (MADEP 2008). As specified in the MCP, the IH evaluation was performed for current use receptors: current commercial/industrial workers and current storage unit users.

Exposure areas considered included individual sampling locations, the west warehouse (average of locations 1, 2, 3, and 9), the east warehouse (average of locations 4, 5, 6, 7, 8, 10, 10A, 11, 12, 13, 13A, and 14), and the entire warehouse (locations for west and east warehouse combined). A current receptor was assumed to be present in the warehouse areas for 3 hr/day as a storage unit user; in the office or warehouse for 8 hr/day as a commercial/industrial worker; in the pump room for 4 hr/week as a commercial/industrial worker; and in the bathroom for 1 hr/day as a commercial/industrial worker or storage unit user. Hypothetical future residents were assumed to be present 24 hr/day in any area of the building.

Risks were estimated according to USEPA guidance (USEPA 2009a) and the MCP (MADEP 2008). Volatile organic compounds in indoor air were not considered to pose significant cumulative risk to human health within or below the EPA Superfund target excess lifetime cancer risk range of $1x10^{-6}$ to $1x10^{-4}$ for potential carcinogenic effects and a target Hazard Index (HI) of 1 for potential noncarcinogenic effects. The criteria applicable to the MADEP IH evaluation are a target excess lifetime cancer risk of $1x10^{-5}$ for potential carcinogenic effects and a target Hazard Index (HI) of 1 for potential noncarcinogenic effects.

The risk assessment was executed on all constituents that were detected in at least one indoor air sample, including several constituents that have been demonstrated *not* to be site-related, such as naphthalene and 1,4-dichlorobenzene. These constituents are present as a result of sources within the building and are not within the scope of a release to the environment addressed under the Comprehensive Environmental Response, Compensation, and Liability Act.

4. Results

4.1 Current Commercial/Industrial Worker Scenario (Short-Term)

Cumulative estimated lifetime cancer risks for a short-term (5 year) exposure period to a current commercial/industrial worker exposed to the COPCs in indoor air in the warehouse, office, bathroom, and pump room did not exceed the MADEP IH target risk level of $1x10^{-5}$ (Table 3).

Cumulative estimated non-cancer risks for a short-term (5 year) exposure period to a current commercial/industrial worker exposed to the COPCs in indoor air in the warehouse, office, bathroom, and pump room did not exceed the target HI of 1 (Table 3).

No IH condition as defined by the MCP was found to exist at 15 Olympia Avenue, Woburn, MA for the short-term worker exposure scenario.

4.2 Current Commercial/Industrial Worker Scenario (Long-Term)

Cumulative estimated lifetime cancer risks for a long-term (25 year) exposure period to a current commercial/industrial worker exposed to the COPCs in indoor air were within the Superfund target excess lifetime cancer risk range of $1x10^{-6}$ to $1x10^{-4}$ and no samples exceeded $1x10^{-4}$ (Table 4).

Cumulative estimated non-cancer risks for a long-term (25 year) exposure period to a current commercial/industrial worker exposed to the COPCs in indoor air in the warehouse, office, bathroom, and pump room did not exceed the target HI of 1 (Table 4).

4.3 Current Storage Unit User Scenario (Short-Term)

Cumulative estimated lifetime cancer risks for a short-term (5 year) exposure period to a current storage unit user exposed to the COPCs in indoor air in the warehouse and bathroom did not exceed the MADEP target $1x10^{-5}$ risk level (Table 5).

Cumulative estimated non-cancer risks for a short-term (5 year) exposure period to a current storage unit user exposed to the COPCs in indoor air in the warehouse and bathroom did not exceed the target HI of 1 (Tables 5, 6).

No IH condition as defined by the MCP was found to exist at 15 Olympia Avenue, Woburn, MA for the short-term storage unit user exposure scenario.

4.4 Current Storage Unit User Scenario (Long-Term)

Cumulative estimated cancer risks for a long-term (25 year) exposure period to a current storage unit user exposed to the COPCs in indoor air were within the Superfund target excess lifetime cancer risk range of $1x10^{-6}$ to $1x10^{-4}$ and no samples exceeded $1x10^{-4}$ (Table 6).

Cumulative estimated non-cancer risks for a long-term (25 year) exposure period to a current storage unit user exposed to the COPCs in indoor air in the warehouse and bathroom did not exceed the target HI of 1 (Tables 5, 6).

4.5 Hypothetical Future Resident Scenario (Long-Term)

Cumulative estimated lifetime cancer risks for a long-term (30 year) exposure period to a hypothetical future resident exposed to the COPCs in indoor air exceeded the Superfund target excess lifetime cancer risk range of $1x10^{-6}$ to $1x10^{-4}$ at locations 1, 2, 4, 10, 10A, 12, 13, and 13A (Table 7).

Cumulative estimated non-cancer risks for a long-term (30 year) exposure period to a hypothetical future resident exposed to the COPCs in indoor air in the warehouse, office, and bathroom exceeded the target HI of 1 at locations 1, 2, 3, 4, 6, 7, 8, 10, 10A, 12, 13, 13A, 14, east warehouse, and entire warehouse (Table 7).

5. Conclusions and Recommendations

No indoor air sample exceeded acute exposure criteria or occupational criteria, and acute indoor air exposures to the COPCs are not estimated to pose significant risks to human health.

Cumulative estimated carcinogenic and noncarcinogenic risks for current commercial/industrial workers and storage unit users did not exceed target risk levels for a short-term (5 year) exposure period. No IH condition as defined by the MCP was found to exist at 15 Olympia Avenue, Woburn, MA.

Furthermore, estimated excess lifetime carcinogenic risks for these current land use receptors for a long-term (25 year) exposure period are within the Superfund target excess lifetime cancer risk range of $1x10^{-6}$ to $1x10^{-4}$ at all locations and do not exceed $1x10^{-4}$ at any locations. At several locations (primarily for commercial/industrial workers) excess lifetime cancer risks exceeded the midpoint of the Superfund risk range ($1x10^{-5}$) assuming that a receptor would consistently remain at one location over the entire 25-year term.

Cumulative carcinogenic and noncarcinogenic risks for hypothetical future residents for a long-term (30 year) exposure period exceeded the Superfund target excess lifetime cancer risk range of $1x10^{-6}$ to $1x10^{-4}$ in the majority of exposure areas. Despite the fact that it is not reasonably anticipated that this building might be used for residential purposes in the future, the hypothetical future residential use scenario is reported here for completeness.

Estimated excess lifetime cancer risks for most samples are not primarily posed by estimated exposures to tetrachloroethylene (PCE). Instead, the risks are posed by several volatile constituents, including PCE, naphthalene (a constituent in moth repellents and fuels), and 1,4-dichlorobenzene (a constituent in moth repellents, cleaning products, and bathroom deodorizers). For instance, the cumulative estimated excess lifetime cancer risk for selected samples is posed by the following constituents:

Location IA-01:	74% 1,4-dichlorobenzene, 15% naphthalene
Location IA-02:	76% 1,4-dichlorobenzene, 13% naphthalene
Location IA-06:	55% PCE, 30% naphthalene
Location IA-12:	59% PCE, 28% naphthalene
Location IA-13:	63% PCE, 28% naphthalene
Location IA-13A:	57% naphthalene, 38% PCE
Average:	36% PCE, 31% naphthalene, 24% 1,4-dichlorobenzene

Naphthalene concentrations ranged from 2-16 ug/m^3 in indoor air but naphthalene was not detected in the soil vapor samples. Reported naphthalene levels in indoor air have been recently reviewed by Magee, et al. (2010). The indoor air levels associated with moth repellent use range from 530 to 1,200 ug/m^3. Thus, levels of 2-16 ug/m^3 are not uncommon in locations, such as storage units, where moth repellents are in use. Because naphthalene is not found in soil vapor and because the levels found in the building are consistent with typical air levels associated with moth repellent use, naphthalene is not site-related. Although it was included in the estimation of risks, it should not be considered a COPC for this site.

1,4-dichlorobenzene concentrations ranged from <1 – 40 ug/m^3 but 1,4-dichlorobenzene was not a major constituent in soil vapor samples, ranging from non-detect to 1 ug/m^3. According to the Agency for Toxic Substances and Disease Registry (ARSDR, 2006), levels of 1,4-dichlorobenzene in bathrooms with deodorizers range from 470 to 1,300 ug/m^3. In buildings using solid deodorizers, median and maximum 1,4-dichlorobenzene levels were reported as 340 and 630 ug/m^3. In enclosed spaces where 1,4-dichlorobenzene moth repellents were in use, levels of 1,4-dichlorobenzene ranging from 1,300 to 3,300 ug/m^3 were measured. EPA also measured 1,4-dichlorobenzene in a test house containing moth repellents in a bedroom closet as specified by the manufacturer's recommended usage (Tichenor et al., 1990). Average 1,4-dichlorobenzene concentrations in the closet, bedroom, second bedroom, and den were 74,000, 5,100, 3,900, and 3,700 ug/m^3 respectively. Thus, levels of <1 to 40 ug/m^3 are not uncommon in locations, such as storage sheds and commercial buildings, where moth repellents, cleaning products and room deodorizers are in use. Because 1,4-dichlorobenzene is not found in soil vapor at appreciable levels and because the levels found in the building are consistent with typical indoor air levels associated with the use of 1,4-dichlorobenzene-containing products, 1,4-dichlorobenzene is not site-related. Although it was included in the estimation of risks, it should not be considered a COPC for this site.

When the entire risk assessment was executed for just PCE to determine its role in posing estimated cancer risks to receptors who might breathe PCE in indoor air, all samples were within the Superfund risk range of $1x10^{-6}$ to $1x10^{-4}$, and none exceeded $1x10^{-4}$. Only a few individual samples posed risks exceeding the midpoint of the range ($1x10^{-5}$) for a long-term exposure period for current use receptors. The west warehouse, the east warehouse, and the total warehouse average samples did not exceed $1x10^{-5}$ estimated excess lifetime cancer risk. The only exceedances of the midpoint of the risk range were selected samples as noted below:

Location IA-06	$2x10^{-5}$
Location IA-12	$2x10^{-5}$
Location IA-13	$2x10^{-5}$
Location IA-13A	$3x10^{-5}$

6. References

ATSDR. 2006. Toxicological Profile: 1,4-Dichlorobenzene. Atlanta, Georgia.

MADEP. 2008. Massachusetts Department of Environmental Protection:

Bureau of Waste Site Cleanup, Massachusetts Contingency Plan, 310 CMR 40.0000, February 2008.

Magee, B., et al. 2010. Screening-level population risk assessment of nasal tumors in the US due to naphthalene exposure. *Regul. Toxicol. Pharmacol*. 57:168-180.

Tichenor, B.A., L.A. Sparks, J.B. White and M.D. Jackson. 1990. Evaluating Sources of Indoor Air Pollution. *J. Air Waste Manage. Assoc.* 40:487-492.

U.S. Environmental Protection Agency (USEPA). 2009a. Exposure Factors Handbook: 2009 Update. Office of Research and Development, National Center for Environmental Assessment. EPA/600/R-09/052A. July.

U.S. Environmental Protection Agency (USEPA). 2009b. Risk Assessment Guidance for Superfund, Volume I: Human Health Evaluation Manual (Part F, Supplemental Guidance for Inhalation Risk Assessment). Office of Superfund Remediation and Technology Innovation. EPA-540-R-070-002. January.

Table 1. Acute and Occupational Exposure Criteria for COPCs in Indoor Air

Compound	ATSDR MRL	USEPA AEGL	OSHA PEL	ACGIH TLV
Benzene	2.87E+01	2.87E+04	3.19E+04	1.60E+03
Bromodichloromethane	NA	NA	NA	NA
Bromoform	NA	NA	5.17E+04	5.17E+03
1,3-Butadiene	2.21E+02	1.48E+06	2.21E+03	4.42E+03
C5-C8 Aliphatic Hydrocarbons (a)	NA	7.30E+05	NA	1.14E+06
C9-C10 Aromatic Hydrocarbons (a)	NA	7.30E+05	NA	1.47E+06
C9-C12 Aliphatic Hydrocarbons (a)	NA	7.30E+05	NA	1.83E+06
Carbon tetrachloride	NA	1.20E+05	6.30E+04	3.15E+04
Chlorobenzene	NA	4.62E+04	3.50E+05	4.62E+04
Chloroform	4.87E+02	1.41E+05	2.40E+05	4.87E+04
1,2-Dibromoethane	NA	3.54E+04	1.54E+05	NA
1,3-Dichlorobenzene	NA	NA	NA	NA
1,4-Dichlorobenzene	1.20E+04	NA	2.71E+06	6.01E+04
1,1-Dichloroethane	NA	NA	4.00E+05	4.05E+05
1,2-Dichloroethane	NA	NA	2.02E+05	NA
1,1-Dichloroethene	NA	NA	NA	NA
cis-1,2-Dichloroethene	NA	5.55E+05	7.90E+05	7.93E+05
trans-1,2-Dichloroethene	7.93E+02	1.11E+06	7.90E+05	7.93E+05
1,2-Dichloropropane	2.31E+02	NA	3.50E+05	NA
trans-1,3-Dichloropropene	NA	NA	NA	4.54E+03
Ethylbenzene	4.34E+04	1.43E+05	4.35E+05	4.34E+05
IsoPropylbenzene	NA	2.45E+05	1.20E+06	2.45E+05
Methyl tert-butyl ether	7.20E+03	1.80E+05	NA	1.80E+05
Methylene chloride	2.09E+03	2.09E+05	8.69E+04	1.74E+05
Naphthalene	NA	NA	5.00E+04	5.24E+04
Tetrachloroethene	1.36E+03	2.38E+05	6.79E+05	1.70E+05
Toluene	3.76E+03	7.53E+05	7.53E+05	7.53E+04
1,1,1-Trichloroethane	1.09E+04	1.25E+06	1.90E+06	NA
1,1,2-Trichloroethane	NA	NA	4.50E+04	5.44E+04
Trichloroethene	1.07E+04	4.13E+05	5.36E+05	5.36E+04
1,2,4-Trimethylbenzene	NA	2.21E+05	NA	1.23E+05
Vinyl chloride	1.29E+03	1.80E+05	2.58E+03	2.58E+03
Xylenes	8.67E+03	5.64E+05	4.35E+05	4.34E+05

Notes:
All concentrations in ug/m^3. Concentrations reported in parts per million (ppm) were first converted to mg/m^3: (concentration in ppm)*(molecular weight)/24.45.
NA = value not available.
ATSDR MRL = Agency for Toxic Substances and Disease Registry Minimum Risk Level (acute inhalation exposure).

USEPA AEGL = US Environmental Protection Agency Acute Exposure Guideline Level (8-hour AEGL 1; AEGL 2 if AEGL 1 not reported).
OSHA PEL = Occupational Safety and Health Administration Permissible Exposure Limits (29 CFR 1910 Subpart Z).
ACGIH TLV = American Conference of Governmental Industrial Hygienists Threshold Limit Value® (time-weighted average).
(a) Acute standards listed are those for gasoline.

Table 2. Exposure Assumptions for the Estimation of Risks from Inhalation of Volatile Constituents in Indoor Air

Hypothetical Future Resident

Medium	Parameter	Units	Hypothetical Future Resident - Long Term Value	Source	Comment
Indoor Air	Exposure Time	hrs/d	24	(b)	
	Exposure Frequency	d/y	350	(b)	
	Exposure Duration	y	30	(b)	
	Averaging Time - Cancer	hrs	683280	(a)	
	Averaging Time - Non-Cancer	hrs	262800	(b)	

Commercial/Industrial Worker (Warehouse, Office)

Medium	Parameter	Units	Commercial/ Industrial Worker Long Term Value	Source	Comment	Commercial/ Industrial Worker Short Term Value	Source	Comment
Indoor Air	Exposure Time	hrs/d	8	(b)	5 days/wk, 50 wks/yr	8	(b)	5 days/wk, 50 wks/yr
	Exposure Frequency	d/y	250	(b)	5 days/wk, 50 wks/yr	250	(b)	5 days/wk, 50 wks/yr
	Exposure Duration	y	25	(b)		5	(c)	MADEP IH
	Averaging Time - Cancer	hrs	683280	(a)		683280	(a)	
	Averaging Time - Non-Cancer	hrs	219000	(b)		43800	(b)	

Commercial/Industrial Worker or Storage Unit User (Bathroom)

Medium	Parameter	Units	Commercial/ Industrial Worker or Storage User - Long Term - Bathroom Value	Source	Comment	Commercial/ Industrial Worker or Storage User - Short Term - Bathroom Value	Source	Comment
Indoor Air	Exposure Time	hrs/d	1		professional judgment	1		professional judgment
	Exposure Frequency	d/y	250	(b)	5 days/wk, 50 wks/yr	250	(b)	5 days/wk, 50 wks/yr
	Exposure Duration	y	25	(b)		5	(c)	MADEP IH
	Averaging Time - Cancer	hrs	683280	(a)		683280	(a)	
	Averaging Time - Non-Cancer	hrs	219000	(b)		43800	(b)	

Commercial/Industrial Worker (Pump Room)

Medium	Parameter	Units	Commercial/ Industrial Worker Long Term - Pump Room Value	Source	Comment	Commercial/ Industrial Worker Short Term Pump Room Value	Source	Comment
Indoor Air	Exposure Time	hrs/d	0.57		4 hrs/wk	0.57		4 hrs/wk
	Exposure Frequency	d/y	250	(b)	5 days/wk, 50 wks/yr	250	(b)	5 days/wk, 50 wks/yr
	Exposure Duration	y	25	(b)		5	(c)	MADEP IH
	Averaging Time - Cancer	hrs	683280	(a)		683280	(a)	
	Averaging Time - Non-Cancer	hrs	219000	(b)		43800	(b)	

Storage Unit User (Warehouse)

Medium	Parameter	Units	Storage Unit User Long Term Warehouse Value	Source	Comment	Storage Unit User Short Term Warehouse Value	Source	Comment
Indoor Air	Exposure Time	hrs/d	3		professional judgment	3		professional judgment
	Exposure Frequency	d/y	250	(b)	5 days/wk, 50 wks/yr	250	(b)	5 days/wk, 50 wks/yr
	Exposure Duration	y	25	(b)		5	(c)	MADEP IH
	Averaging Time - Cancer	hrs	683280	(a)		683280	(a)	
	Averaging Time - Non-Cancer	hrs	219000	(b)		43800	(b)	

Notes:
(a) USEPA (2009a)
(b) USEPA (2009b)
(c) MADEP IH Exposure Period

Table 3. Summary of Estimated Indoor Air Risks for Short-Term Exposures (MADEP Imminent Hazard Evaluation) for Current Commercial/Industrial Workers

Exposure Area	Receptor	Total Cancer Risk	Total HI
IA-01	Commercial/Industrial Worker	8.E-06	0.4
IA-02	Commercial/Industrial Worker	8.E-06	0.4
IA-03	Commercial/Industrial Worker	5.E-06	0.4
IA-04	Commercial/Industrial Worker	6.E-06	0.6
IA-05	Commercial/Industrial Worker	2.E-06	0.2
IA-06	Commercial/Industrial Worker	6.E-06	0.4
IA-07	Commercial/Industrial Worker	6.E-06	0.5
IA-08 (Office)	Commercial/Industrial Worker	3.E-06	0.4
IA-09	Commercial/Industrial Worker	1.E-06	0.1
IA-10	Commercial/Industrial Worker	6.E-06	0.5
IA-10A	Commercial/Industrial Worker	8.E-06	0.7
IA-11	Commercial/Industrial Worker	3.E-06	0.2
IA-12	Commercial/Industrial Worker	7.E-06	0.5
IA-13	Commercial/Industrial Worker	6.E-06	0.4
IA-13A	Commercial/Industrial Worker	1.E-05	1
IA-14 (Bathroom)	Commercial/Industrial Worker and Storage User	5.E-07	0.06
IA-15 (Pump Room)	Commercial/Industrial Worker	1.E-07	0.008
East Warehouse	Commercial/Industrial Worker	6.E-06	0.5
West Warehouse	Commercial/Industrial Worker	6.E-06	0.3
Entire Warehouse	Commercial/Industrial Worker	6.E-06	0.5

Notes:

Bold values indicate cumulative cancer risk > $1x10^{-5}$ or cumulative HI > 1

Table 4. Summary of Estimated Indoor Air Risks for Long-Term Exposures for Current Commercial/Industrial Workers

Exposure Area	Receptor	Total Cancer Risk	Total HI
IA-01	Commercial/Industrial Worker	4.E-05	0.4
IA-02	Commercial/Industrial Worker	4.E-05	0.4
IA-03	Commercial/Industrial Worker	2.E-05	0.4
IA-04	Commercial/Industrial Worker	3.E-05	0.6
IA-05	Commercial/Industrial Worker	1.E-05	0.2
IA-06	Commercial/Industrial Worker	3.E-05	0.4
IA-07	Commercial/Industrial Worker	3.E-05	0.5
IA-08 (Office)	Commercial/Industrial Worker	2.E-05	0.4
IA-09	Commercial/Industrial Worker	5.E-06	0.1
IA-10	Commercial/Industrial Worker	3.E-05	0.5
IA-10A	Commercial/Industrial Worker	4.E-05	0.7
IA-11	Commercial/Industrial Worker	1.E-05	0.2
IA-12	Commercial/Industrial Worker	3.E-05	0.5
IA-13	Commercial/Industrial Worker	3.E-05	0.4
IA-13A	Commercial/Industrial Worker	7.E-05	1
IA-14 (Bathroom)	Commercial/Industrial Worker and Storage Unit User	3.E-06	0.06
IA-15 (Pump Room)	Commercial/Industrial Worker	6.E-07	0.008
East Warehouse	Commercial/Industrial Worker	3.E-05	0.5
West Warehouse	Commercial/Industrial Worker	3.E-05	0.3
Entire Warehouse	Commercial/Industrial Worker	3.E-05	0.5

Notes:
Bold values indicate cumulative cancer risk > $1x10^{-6}$ to $1x10^{-4}$ or cumulative HI > 1

Table 5. Summary of Estimated Indoor Air Risks for Short-Term Exposures (MADEP Imminent Hazard Evaluation) for Current Storage Unit Users

Exposure Area	Receptor	Total Cancer Risk	Total HI
IA-01	Storage User	3.E-06	0.2
IA-02	Storage User	3.E-06	0.2
IA-03	Storage User	2.E-06	0.1
IA-04	Storage User	2.E-06	0.2
IA-05	Storage User	8.E-07	0.09
IA-06	Storage User	2.E-06	0.2
IA-07	Storage User	2.E-06	0.2
IA-09	Storage User	4.E-07	0.06
IA-10	Storage User	2.E-06	0.2
IA-10A	Storage User	3.E-06	0.2
IA-11	Storage User	9.E-07	0.06
IA-12	Storage User	2.E-06	0.2
IA-13	Storage User	2.E-06	0.1
IA-13A	Storage User	5.E-06	0.5
IA-14 (Bathroom)	Commercial/Industrial Worker and Storage User	5.E-07	0.06
East Warehouse	Storage User	2.E-06	0.2
West Warehouse	Storage User	2.E-06	0.1
Entire Warehouse	Storage User	2.E-06	0.2

Notes:
Bold values indicate cumulative cancer risk > $1x10^{-5}$ or cumulative HI > 1

Table 6. Summary of Estimated Indoor Air Risks for Long-Term Exposures for Current Storage Unit Users

Exposure Area	Receptor	Total Cancer Risk	Total HI
IA-01	Storage User	1.E-05	0.2
IA-02	Storage User	2.E-05	0.2
IA-03	Storage User	9.E-06	0.1
IA-04	Storage User	1.E-05	0.2
IA-05	Storage User	4.E-06	0.09
IA-06	Storage User	1.E-05	0.2
IA-07	Storage User	1.E-05	0.2
IA-09	Storage User	2.E-06	0.06
IA-10	Storage User	1.E-05	0.2
IA-10A	Storage User	1.E-05	0.2
IA-11	Storage User	5.E-06	0.06
IA-12	Storage User	1.E-05	0.2
IA-13	Storage User	1.E-05	0.1
IA-13A	Storage User	3.E-05	0.5
IA-14 (Bathroom)	Commercial/Industrial Worker and Storage User	3.E-06	0.06
East Warehouse	Storage User	1.E-05	0.2
West Warehouse	Storage User	1.E-05	0.1
Entire Warehouse	Storage User	1.E-05	0.2

Notes:

Bold values indicate cumulative cancer risk > $1x10^{-6}$ to $1x10^{-4}$ or cumulative HI > 1

Table 7. Summary of Estimated Indoor Air Risks for Long-Term Exposures for Hypothetical Future Residents

Exposure Area	Receptor	Total Cancer Risk	Total HI
IA-01	Resident	**2.E-04**	**2**
IA-02	Resident	**2.E-04**	**2**
IA-03	Resident	1.E-04	**2**
IA-04	Resident	**2.E-04**	**2**
IA-05	Resident	5.E-05	1
IA-06	Resident	1.E-04	**2**
IA-07	Resident	1.E-04	**2**
IA-08 (Office)	Resident	9.E-05	**2**
IA-09	Resident	2.E-05	0.6
IA-10	Resident	**2.E-04**	**2**
IA-10A	Resident	**2.E-04**	**3**
IA-11	Resident	6.E-05	0.7
IA-12	Resident	**2.E-04**	**2**
IA-13	Resident	**2.E-04**	**2**
IA-13A	Resident	**3.E-04**	**6**
IA-14 (Bathroom)	Resident	1.E-04	**2**
IA-15 (Pump Room)	Resident	4.E-05	0.5
East Warehouse	Resident	1.E-04	**2**
West Warehouse	Resident	1.E-04	1
Entire Warehouse	Resident	1.E-04	**2**

Notes:
Bold values indicate cumulative cancer risk> $1x10^{-6}$ to $1x10^{-4}$ or cumulative HI > 1

Appendix E

Preliminary Risk Assessment Supporting Calculations

Exposure and Risk Estimates Associated With Inhalation of Volatile Compounds in Air
UniFirst Corporation
15 Olympia Avenue, Woburn, MA
Storage User - Long Term - Warehouse
Indoor Air
Volatilization from Indoor Air
Warehouse
IA-01

Receptor:	Storage User - Long Term - Warehou
Medium of Origin:	Indoor Air
Exposure Medium:	Indoor Air
Exposure Area:	Warehouse
Depth:	NA
Duration:	NA

$$C_{air} = \frac{C_{source}}{AF}$$

$$EC_{inh} = \frac{C_{air} \times ET \times EF \times ED}{AT}$$

$$HI_{inh} = \frac{EC_{inh}}{RfC}$$

$$Risk = EC_{inh} \times URF \times CF$$

Parameter	Definition	Units	Value	Comment
ET	Indoor Air Exposure Time	hrs/d	3	
EF	Indoor Air Exposure Frequency	ds/y	250	
ED	Indoor Air Exposure Duration	y	25	
ATc	Indoor Air Averaging Time - Cancer	hrs	683280	
ATn	Indoor Air Averaging Time - Non-Cancer	hrs	219000	
CF	Conversion Factor	ug/mg	1000	

Compound	EPC Indoor Air (mg/m3)	RfC (mg/m3)	URF 1/(ug/m3)	ADE-c mg/m3	Riskinh	ADE-nc mg/m3	HIinh	Risk (Indoor Air)	HI (Indoor Air)
Chloroform	2.15E-04	0.098	0.000023	5.9E-06	1.E-07	1.8E-05	2.E-04	1.E-07	2.E-04
1,1-Dichloroethane	4.05E-05	NA	0.0000016	1.1E-06	2.E-09	NA	NA	2.E-09	NA
1,2-Dichloroethane	5.54E-04	2.4	0.000026	1.5E-05	4.E-07	4.7E-05	2.E-05	4.E-07	2.E-05
1,1-Dichloroethene	3.95E-05	0.2	NA	NA	NA	3.4E-06	2.E-05	NA	2.E-05
Tetrachloroethene	4.36E-03	0.27	0.0000059	1.2E-04	7.E-07	3.7E-04	1.E-03	7.E-07	1.E-03
Trichloroethene	5.35E-05	NA	0.000002	1.5E-06	3.E-09	NA	NA	3.E-09	NA
Vinyl chloride	ND	0.1	0.0000044	ND	ND	ND	ND	ND	ND
trans-1,2-Dichloroethene	3.95E-05	0.06	NA	NA	NA	3.4E-06	6.E-05	NA	6.E-05
cis-1,2-Dichloroethene	3.95E-05	0.035	NA	NA	NA	3.4E-06	1.E-04	NA	1.E-04
1,1,1-Trichloroethane	2.51E-04	5	NA	NA	NA	2.1E-05	4.E-06	NA	4.E-06
Methylene chloride	3.60E-03	1	0.00000047	9.9E-05	5.E-08	3.1E-04	3.E-04	5.E-08	3.E-04
Carbon tetrachloride	4.59E-04	0.1	0.000006	1.3E-05	8.E-08	3.9E-05	4.E-04	8.E-08	4.E-04
Xylenes	2.99E-03	0.1	NA	NA	NA	2.6E-04	3.E-03	NA	3.E-03
Toluene	5.86E-03	5	NA	NA	NA	5.0E-04	1.E-04	NA	1.E-04
1,2-Dibromoethane	ND	0.009	0.0006	ND	ND	ND	ND	ND	ND
Benzene	7.28E-04	0.03	0.0000078	2.0E-05	2.E-07	6.2E-05	2.E-03	2.E-07	2.E-03
Bromoform	ND	NA	0.0000011	ND	ND	ND	ND	ND	ND
Ethylbenzene	8.59E-04	1	0.0000025	2.4E-05	6.E-08	7.4E-05	7.E-05	6.E-08	7.E-05
IsoPropylbenzene	ND	0.4	NA	ND	ND	ND	ND	ND	ND
trans-1,3-Dichloropropene	ND	0.02	0.000004	ND	ND	ND	ND	ND	ND
Naphthalene	2.30E-03	0.003	0.000034	6.3E-05	2.E-06	2.0E-04	7.E-02	2.E-06	7.E-02
1,3-Butadiene	2.20E-05	0.002	0.00003	6.0E-07	2.E-08	1.9E-06	9.E-04	2.E-08	9.E-04
Methyl tert-butyl ether	3.96E-04	3	0.00000026	1.1E-05	3.E-09	3.4E-05	1.E-05	3.E-09	1.E-05
1,1,2-Trichloroethane	ND	NA	0.000016	ND	ND	ND	ND	ND	ND
1,2,4-Trimethylbenzene	1.22E-03	0.007	NA	NA	NA	1.0E-04	1.E-02	NA	1.E-02
1,2-Dichloropropane	ND	0.004	0.00001	ND	ND	ND	ND	ND	ND
1,3-Dichlorobenzene	ND	0.2	NA	ND	ND	ND	ND	ND	ND
1,4-Dichlorobenzene	3.60E-02	0.8	0.000011	9.9E-04	1.E-05	3.1E-03	4.E-03	1.E-05	4.E-03
Bromodichloromethane	3.35E-05	NA	0.000037	9.2E-07	3.E-08	NA	NA	3.E-08	NA
Chlorobenzene	4.60E-05	0.05	NA	NA	NA	3.9E-06	8.E-05	NA	8.E-05
C5-C8 Aliphatic Hydrocarbons	5.80E-02	0.2	NA	NA	NA	5.0E-03	2.E-02	NA	2.E-02
C9-C12 Aliphatic Hydrocarbons	8.70E-02	0.2	NA	NA	NA	7.4E-03	4.E-02	NA	4.E-02
C9-C10 Aromatic Hydrocarbons	ND	0.05	NA	ND	ND	ND	ND	ND	ND
Total					1.E-05		2.E-01	1.E-05	2.E-01

NA - Not available
NC - Not calculated
ND - Not detected

Exposure and Risk Estimates Associated With Inhalation of Volatile Compounds in Air
UniFirst Corporation
15 Olympia Avenue, Woburn, MA
Storage User - Short Term - Warehouse
Indoor Air
Volatilization from Indoor Air
Warehouse
IA-01

Receptor:	Storage User - Short Term - Warehou
Medium of Origin:	Indoor Air
Exposure Medium:	Indoor Air
Exposure Area:	Warehouse
Depth:	NA
Duration:	NA

$$C_{air} = \frac{C_{source}}{AF}$$

$$EC_{inh} = \frac{C_{air} \times ET \times EF \times ED}{AT}$$

$$HI_{inh} = \frac{EC_{inh}}{RfC}$$

$$Risk = EC_{inh} \times URF \times CF$$

Parameter	Definition	Units	Value	Comment
ET	Indoor Air Exposure Time	hrs/d	3	
EF	Indoor Air Exposure Frequency	ds/y	250	
ED	Indoor Air Exposure Duration	y	5	
ATc	Indoor Air Averaging Time - Cancer	hrs	683280	
ATn	Indoor Air Averaging Time - Non-Cancer	hrs	43800	
CF	Conversion Factor	ug/mg	1000	

Compound	EPC Indoor Air (mg/m3)	RfC (mg/m3)	URF 1/(ug/m3)	ADE-c mg/m3	Riskinh	ADE-nc mg/m3	HIinh	Risk (Indoor Air)	HI (Indoor Air)
Chloroform	2.15E-04	0.098	0.000023	1.2E-06	3.E-08	1.8E-05	2.E-04	3.E-08	2.E-04
1,1-Dichloroethane	4.05E-05	NA	0.0000016	2.2E-07	4.E-10	NA	NA	4.E-10	NA
1,2-Dichloroethane	5.54E-04	2.4	0.000026	3.0E-06	8.E-08	4.7E-05	2.E-05	8.E-08	2.E-05
1,1-Dichloroethene	3.95E-05	0.2	NA	NA	NA	3.4E-06	2.E-05	NA	2.E-05
Tetrachloroethene	4.36E-03	0.27	0.0000059	2.4E-05	1.E-07	3.7E-04	1.E-03	1.E-07	1.E-03
Trichloroethene	5.35E-05	NA	0.000002	2.9E-07	6.E-10	NA	NA	6.E-10	NA
Vinyl chloride	ND	0.1	0.0000044	ND	ND	ND	ND	ND	ND
trans-1,2-Dichloroethene	3.95E-05	0.06	NA	NA	NA	3.4E-06	6.E-05	NA	6.E-05
cis-1,2-Dichloroethene	3.95E-05	0.035	NA	NA	NA	3.4E-06	1.E-04	NA	1.E-04
1,1,1-Trichloroethane	2.51E-04	5	NA	NA	NA	2.1E-05	4.E-06	NA	4.E-06
Methylene chloride	3.60E-03	1	0.00000047	2.0E-05	9.E-09	3.1E-04	3.E-04	9.E-09	3.E-04
Carbon tetrachloride	4.59E-04	0.1	0.000006	2.5E-06	2.E-08	3.9E-05	4.E-04	2.E-08	4.E-04
Xylenes	2.99E-03	0.1	NA	NA	NA	2.6E-04	3.E-03	NA	3.E-03
Toluene	5.86E-03	5	NA	NA	NA	5.0E-04	1.E-04	NA	1.E-04
1,2-Dibromoethane	ND	0.009	0.0006	ND	ND	ND	ND	ND	ND
Benzene	7.28E-04	0.03	0.0000078	4.0E-06	3.E-08	6.2E-05	2.E-03	3.E-08	2.E-03
Bromoform	ND	NA	0.0000011	ND	ND	ND	ND	ND	ND
Ethylbenzene	8.59E-04	1	0.0000025	4.7E-06	1.E-08	7.4E-05	7.E-05	1.E-08	7.E-05
IsoPropylbenzene	ND	0.4	NA	ND	ND	ND	ND	ND	ND
trans-1,3-Dichloropropene	ND	0.02	0.000004	ND	ND	ND	ND	ND	ND
Naphthalene	2.30E-03	0.003	0.000034	1.3E-05	4.E-07	2.0E-04	7.E-02	4.E-07	7.E-02
1,3-Butadiene	2.20E-05	0.002	0.00003	1.2E-07	4.E-09	1.9E-06	9.E-04	4.E-09	9.E-04
Methyl tert-butyl ether	3.96E-04	3	0.00000026	2.2E-06	6.E-10	3.4E-05	1.E-05	6.E-10	1.E-05
1,1,2-Trichloroethane	ND	NA	0.000016	ND	ND	ND	ND	ND	ND
1,2,4-Trimethylbenzene	1.22E-03	0.007	NA	NA	NA	1.0E-04	1.E-02	NA	1.E-02
1,2-Dichloropropane	ND	0.004	0.00001	ND	ND	ND	ND	ND	ND
1,3-Dichlorobenzene	ND	0.2	NA	ND	ND	ND	ND	ND	ND
1,4-Dichlorobenzene	3.60E-02	0.8	0.000011	2.0E-04	2.E-06	3.1E-03	4.E-03	2.E-06	4.E-03
Bromodichloromethane	3.35E-05	NA	0.000037	1.8E-07	7.E-09	NA	NA	7.E-09	NA
Chlorobenzene	4.60E-05	0.05	NA	NA	NA	3.9E-06	8.E-05	NA	8.E-05
C5-C8 Aliphatic Hydrocarbons	5.80E-02	0.2	NA	NA	NA	5.0E-03	2.E-02	NA	2.E-02
C9-C12 Aliphatic Hydrocarbons	8.70E-02	0.2	NA	NA	NA	7.4E-03	4.E-02	NA	4.E-02
C9-C10 Aromatic Hydrocarbons	ND	0.05	NA	ND	ND	ND	ND	ND	ND
Total					3.E-06		2.E-01	3.E-06	2.E-01

NA - Not available
NC - Not calculated
ND - Not detected

Exposure and Risk Estimates Associated With Inhalation of Volatile Compounds in Air
UniFirst Corporation
15 Olympia Avenue, Woburn, MA
Commercial/Industrial Worker - Long Term
Indoor Air
Volatilization from Indoor Air
Warehouse
IA-01

Receptor:	Commercial/Industrial Worker - Long
Medium of Origin:	Indoor Air
Exposure Medium:	Indoor Air
Exposure Area:	Warehouse
Depth:	NA
Duration:	NA

$$C_{air} = \frac{C_{source}}{AF}$$

$$EC_{inh} = \frac{C_{air} \times ET \times EF \times ED}{AT}$$

$$HI_{inh} = \frac{EC_{inh}}{RfC}$$

$$Risk = EC_{inh} \times URF \times CF$$

Parameter	Definition	Units	Value	Comment
ET	Indoor Air Exposure Time	hrs/d	8	
EF	Indoor Air Exposure Frequency	ds/y	250	
ED	Indoor Air Exposure Duration	y	25	
ATc	Indoor Air Averaging Time - Cancer	hrs	683280	
ATn	Indoor Air Averaging Time - Non-Cancer	hrs	219000	
CF	Conversion Factor	ug/mg	1000	

Compound	EPC Indoor Air (mg/m3)	RfC (mg/m3)	URF 1/(ug/m3)	ADE-c mg/m3	Riskinh	ADE-nc mg/m3	HIinh	Risk (Indoor Air)	HI (Indoor Air)
Chloroform	2.15E-04	0.098	0.000023	1.6E-05	4.E-07	4.9E-05	5.E-04	4.E-07	5.E-04
1,1-Dichloroethane	4.05E-05	NA	0.0000016	3.0E-06	5.E-09	NA	NA	5.E-09	NA
1,2-Dichloroethane	5.54E-04	2.4	0.000026	4.1E-05	1.E-06	1.3E-04	5.E-05	1.E-06	5.E-05
1,1-Dichloroethene	3.95E-05	0.2	NA	NA	NA	9.0E-06	5.E-05	NA	5.E-05
Tetrachloroethene	4.36E-03	0.27	0.0000059	3.2E-04	2.E-06	1.0E-03	4.E-03	2.E-06	4.E-03
Trichloroethene	5.35E-05	NA	0.000002	3.9E-06	8.E-09	NA	NA	8.E-09	NA
Vinyl chloride	ND	0.1	0.0000044	ND	ND	ND	ND	ND	ND
trans-1,2-Dichloroethene	3.95E-05	0.06	NA	NA	NA	9.0E-06	2.E-04	NA	2.E-04
cis-1,2-Dichloroethene	3.95E-05	0.035	NA	NA	NA	9.0E-06	3.E-04	NA	3.E-04
1,1,1-Trichloroethane	2.51E-04	5	NA	NA	NA	5.7E-05	1.E-05	NA	1.E-05
Methylene chloride	3.60E-03	1	0.00000047	2.6E-04	1.E-07	8.2E-04	8.E-04	1.E-07	8.E-04
Carbon tetrachloride	4.59E-04	0.1	0.000006	3.4E-05	2.E-07	1.0E-04	1.E-03	2.E-07	1.E-03
Xylenes	2.99E-03	0.1	NA	NA	NA	6.8E-04	7.E-03	NA	7.E-03
Toluene	5.86E-03	5	NA	NA	NA	1.3E-03	3.E-04	NA	3.E-04
1,2-Dibromoethane	ND	0.009	0.0006	ND	ND	ND	ND	ND	ND
Benzene	7.28E-04	0.03	0.0000078	5.3E-05	4.E-07	1.7E-04	6.E-03	4.E-07	6.E-03
Bromoform	ND	NA	0.0000011	ND	ND	ND	ND	ND	ND
Ethylbenzene	8.59E-04	1	0.0000025	6.3E-05	2.E-07	2.0E-04	2.E-04	2.E-07	2.E-04
IsoPropylbenzene	ND	0.4	NA	ND	ND	ND	ND	ND	ND
trans-1,3-Dichloropropene	ND	0.02	0.000004	ND	ND	ND	ND	ND	ND
Naphthalene	2.30E-03	0.003	0.000034	1.7E-04	6.E-06	5.3E-04	2.E-01	6.E-06	2.E-01
1,3-Butadiene	2.20E-05	0.002	0.00003	1.6E-06	5.E-08	5.0E-06	3.E-03	5.E-08	3.E-03
Methyl tert-butyl ether	3.96E-04	3	0.00000026	2.9E-05	8.E-09	9.0E-05	3.E-05	8.E-09	3.E-05
1,1,2-Trichloroethane	ND	NA	0.000016	ND	ND	ND	ND	ND	ND
1,2,4-Trimethylbenzene	1.22E-03	0.007	NA	NA	NA	2.8E-04	4.E-02	NA	4.E-02
1,2-Dichloropropane	ND	0.004	0.00001	ND	ND	ND	ND	ND	ND
1,3-Dichlorobenzene	ND	0.2	NA	ND	ND	ND	ND	ND	ND
1,4-Dichlorobenzene	3.60E-02	0.8	0.000011	2.6E-03	3.E-05	8.2E-03	1.E-02	3.E-05	1.E-02
Bromodichloromethane	3.35E-05	NA	0.000037	2.5E-06	9.E-08	NA	NA	9.E-08	NA
Chlorobenzene	4.60E-05	0.05	NA	NA	NA	1.1E-05	2.E-04	NA	2.E-04
C5-C8 Aliphatic Hydrocarbons	5.80E-02	0.2	NA	NA	NA	1.3E-02	7.E-02	NA	7.E-02
C9-C12 Aliphatic Hydrocarbons	8.70E-02	0.2	NA	NA	NA	2.0E-02	1.E-01	NA	1.E-01
C9-C10 Aromatic Hydrocarbons	ND	0.05	NA	ND	ND	ND	ND	ND	ND
Total					4.E-05		4.E-01	4.E-05	4.E-01

NA - Not available
NC - Not calculated
ND - Not detected

Exposure and Risk Estimates Associated With Inhalation of Volatile Compounds in Air
UniFirst Corporation
15 Olympia Avenue, Woburn, MA
Commercial/Industrial Worker - Short Term
Indoor Air
Volatilization from Indoor Air
Warehouse
IA-01

Receptor:	Commercial/Industrial Worker - Short
Medium of Origin:	Indoor Air
Exposure Medium:	Indoor Air
Exposure Area:	Warehouse
Depth:	NA
Duration:	NA

$$C_{air} = \frac{C_{source}}{AF}$$

$$EC_{inh} = \frac{C_{air} \times ET \times EF \times ED}{AT}$$

$$HI_{inh} = \frac{EC_{inh}}{RfC}$$

$$Risk = EC_{inh} \times URF \times CF$$

Parameter	Definition	Units	Value	Comment
ET	Indoor Air Exposure Time	hrs/d	8	
EF	Indoor Air Exposure Frequency	ds/y	250	
ED	Indoor Air Exposure Duration	y	5	
ATc	Indoor Air Averaging Time - Cancer	hrs	683280	
ATn	Indoor Air Averaging Time - Non-Cancer	hrs	43800	
CF	Conversion Factor	ug/mg	1000	

Compound	EPC Indoor Air (mg/m3)	RfC (mg/m3)	URF 1/(ug/m3)	ADE-c mg/m3	Riskinh	ADE-nc mg/m3	HIinh	Risk (Indoor Air)	HI (Indoor Air)
Chloroform	2.15E-04	0.098	0.000023	3.1E-06	7.E-08	4.9E-05	5.E-04	7.E-08	5.E-04
1,1-Dichloroethane	4.05E-05	NA	0.0000016	5.9E-07	9.E-10	NA	NA	9.E-10	NA
1,2-Dichloroethane	5.54E-04	2.4	0.000026	8.1E-06	2.E-07	1.3E-04	5.E-05	2.E-07	5.E-05
1,1-Dichloroethene	3.95E-05	0.2	NA	NA	NA	9.0E-06	5.E-05	NA	5.E-05
Tetrachloroethene	4.36E-03	0.27	0.0000059	6.4E-05	4.E-07	1.0E-03	4.E-03	4.E-07	4.E-03
Trichloroethene	5.35E-05	NA	0.000002	7.8E-07	2.E-09	NA	NA	2.E-09	NA
Vinyl chloride	ND	0.1	0.0000044	ND	ND	ND	ND	ND	ND
trans-1,2-Dichloroethene	3.95E-05	0.06	NA	NA	NA	9.0E-06	2.E-04	NA	2.E-04
cis-1,2-Dichloroethene	3.95E-05	0.035	NA	NA	NA	9.0E-06	3.E-04	NA	3.E-04
1,1,1-Trichloroethane	2.51E-04	5	NA	NA	NA	5.7E-05	1.E-05	NA	1.E-05
Methylene chloride	3.60E-03	1	0.00000047	5.3E-05	2.E-08	8.2E-04	8.E-04	2.E-08	8.E-04
Carbon tetrachloride	4.59E-04	0.1	0.000006	6.7E-06	4.E-08	1.0E-04	1.E-03	4.E-08	1.E-03
Xylenes	2.99E-03	0.1	NA	NA	NA	6.8E-04	7.E-03	NA	7.E-03
Toluene	5.86E-03	5	NA	NA	NA	1.3E-03	3.E-04	NA	3.E-04
1,2-Dibromoethane	ND	0.009	0.0006	ND	ND	ND	ND	ND	ND
Benzene	7.28E-04	0.03	0.0000078	1.1E-05	8.E-08	1.7E-04	6.E-03	8.E-08	6.E-03
Bromoform	ND	NA	0.0000011	ND	ND	ND	ND	ND	ND
Ethylbenzene	8.59E-04	1	0.0000025	1.3E-05	3.E-08	2.0E-04	2.E-04	3.E-08	2.E-04
IsoPropylbenzene	ND	0.4	NA	ND	ND	ND	ND	ND	ND
trans-1,3-Dichloropropene	ND	0.02	0.000004	ND	ND	ND	ND	ND	ND
Naphthalene	2.30E-03	0.003	0.000034	3.4E-05	1.E-06	5.3E-04	2.E-01	1.E-06	2.E-01
1,3-Butadiene	2.20E-05	0.002	0.00003	3.2E-07	1.E-08	5.0E-06	3.E-03	1.E-08	3.E-03
Methyl tert-butyl ether	3.96E-04	3	0.00000026	5.8E-06	2.E-09	9.0E-05	3.E-05	2.E-09	3.E-05
1,1,2-Trichloroethane	ND	NA	0.000016	ND	ND	ND	ND	ND	ND
1,2,4-Trimethylbenzene	1.22E-03	0.007	NA	NA	NA	2.8E-04	4.E-02	NA	4.E-02
1,2-Dichloropropane	ND	0.004	0.00001	ND	ND	ND	ND	ND	ND
1,3-Dichlorobenzene	ND	0.2	NA	ND	ND	ND	ND	ND	ND
1,4-Dichlorobenzene	3.60E-02	0.8	0.000011	5.3E-04	6.E-06	8.2E-03	1.E-02	6.E-06	1.E-02
Bromodichloromethane	3.35E-05	NA	0.000037	4.9E-07	2.E-08	NA	NA	2.E-08	NA
Chlorobenzene	4.60E-05	0.05	NA	NA	NA	1.1E-05	2.E-04	NA	2.E-04
C5-C8 Aliphatic Hydrocarbons	5.80E-02	0.2	NA	NA	NA	1.3E-02	7.E-02	NA	7.E-02
C9-C12 Aliphatic Hydrocarbons	8.70E-02	0.2	NA	NA	NA	2.0E-02	1.E-01	NA	1.E-01
C9-C10 Aromatic Hydrocarbons	ND	0.05	NA	ND	ND	ND	ND	ND	ND
Total					8.E-06		4.E-01	8.E-06	4.E-01

NA - Not available
NC - Not calculated
ND - Not detected

Exposure and Risk Estimates Associated With Inhalation of Volatile Compounds in Air
UniFirst Corporation
15 Olympia Avenue, Woburn, MA
Resident - Long Term
Indoor Air
Volatilization from Indoor Air
Warehouse
IA-01

Receptor:	Resident - Long Term
Medium of Origin:	Indoor Air
Exposure Medium:	Indoor Air
Exposure Area:	Warehouse
Depth:	NA
Duration:	NA

$$C_{air} = \frac{C_{source}}{AF}$$

$$EC_{inh} = \frac{C_{air} \times ET \times EF \times ED}{AT}$$

$$HI_{inh} = \frac{EC_{inh}}{RfC}$$

$$Risk = EC_{inh} \times URF \times CF$$

Parameter	Definition	Units	Value	Comment
ET	Indoor Air Exposure Time	hrs/d	24	
EF	Indoor Air Exposure Frequency	ds/y	350	
ED	Indoor Air Exposure Duration	y	30	
ATc	Indoor Air Averaging Time - Cancer	hrs	683280	
ATn	Indoor Air Averaging Time - Non-Cancer	hrs	262800	
CF	Conversion Factor	ug/mg	1000	

Compound	EPC Indoor Air (mg/m3)	RfC (mg/m3)	URF 1/(ug/m3)	ADE-c mg/m3	Riskinh	ADE-nc mg/m3	HIinh	Risk (Indoor Air)	HI (Indoor Air)
Chloroform	2.15E-04	0.098	0.000023	7.9E-05	2.E-06	2.1E-04	2.E-03	2.E-06	2.E-03
1,1-Dichloroethane	4.05E-05	NA	0.0000016	1.5E-05	2.E-08	NA	NA	2.E-08	NA
1,2-Dichloroethane	5.54E-04	2.4	0.000026	2.0E-04	5.E-06	5.3E-04	2.E-04	5.E-06	2.E-04
1,1-Dichloroethene	3.95E-05	0.2	NA	NA	NA	3.8E-05	2.E-04	NA	2.E-04
Tetrachloroethene	4.36E-03	0.27	0.0000059	1.6E-03	9.E-06	4.2E-03	2.E-02	9.E-06	2.E-02
Trichloroethene	5.35E-05	NA	0.000002	2.0E-05	4.E-08	NA	NA	4.E-08	NA
Vinyl chloride	ND	0.1	0.0000044	ND	ND	ND	ND	ND	ND
trans-1,2-Dichloroethene	3.95E-05	0.06	NA	NA	NA	3.8E-05	6.E-04	NA	6.E-04
cis-1,2-Dichloroethene	3.95E-05	0.035	NA	NA	NA	3.8E-05	1.E-03	NA	1.E-03
1,1,1-Trichloroethane	2.51E-04	5	NA	NA	NA	2.4E-04	5.E-05	NA	5.E-05
Methylene chloride	3.60E-03	1	0.00000047	1.3E-03	6.E-07	3.5E-03	3.E-03	6.E-07	3.E-03
Carbon tetrachloride	4.59E-04	0.1	0.000006	1.7E-04	1.E-06	4.4E-04	4.E-03	1.E-06	4.E-03
Xylenes	2.99E-03	0.1	NA	NA	NA	2.9E-03	3.E-02	NA	3.E-02
Toluene	5.86E-03	5	NA	NA	NA	5.6E-03	1.E-03	NA	1.E-03
1,2-Dibromoethane	ND	0.009	0.0006	ND	ND	ND	ND	ND	ND
Benzene	7.28E-04	0.03	0.0000078	2.7E-04	2.E-06	7.0E-04	2.E-02	2.E-06	2.E-02
Bromoform	ND	NA	0.0000011	ND	ND	ND	ND	ND	ND
Ethylbenzene	8.59E-04	1	0.0000025	3.2E-04	8.E-07	8.2E-04	8.E-04	8.E-07	8.E-04
IsoPropylbenzene	ND	0.4	NA	ND	ND	ND	ND	ND	ND
trans-1,3-Dichloropropene	ND	0.02	0.000004	ND	ND	ND	ND	ND	ND
Naphthalene	2.30E-03	0.003	0.000034	8.5E-04	3.E-05	2.2E-03	7.E-01	3.E-05	7.E-01
1,3-Butadiene	2.20E-05	0.002	0.00003	8.1E-06	2.E-07	2.1E-05	1.E-02	2.E-07	1.E-02
Methyl tert-butyl ether	3.96E-04	3	0.00000026	1.5E-04	4.E-08	3.8E-04	1.E-04	4.E-08	1.E-04
1,1,2-Trichloroethane	ND	NA	0.000016	ND	ND	ND	ND	ND	ND
1,2,4-Trimethylbenzene	1.22E-03	0.007	NA	NA	NA	1.2E-03	2.E-01	NA	2.E-01
1,2-Dichloropropane	ND	0.004	0.00001	ND	ND	ND	ND	ND	ND
1,3-Dichlorobenzene	ND	0.2	NA	ND	ND	ND	ND	ND	ND
1,4-Dichlorobenzene	3.60E-02	0.8	0.000011	1.3E-02	1.E-04	3.5E-02	4.E-02	1.E-04	4.E-02
Bromodichloromethane	3.35E-05	NA	0.000037	1.2E-05	5.E-07	NA	NA	5.E-07	NA
Chlorobenzene	4.60E-05	0.05	NA	NA	NA	4.4E-05	9.E-04	NA	9.E-04
C5-C8 Aliphatic Hydrocarbons	5.80E-02	0.2	NA	NA	NA	5.6E-02	3.E-01	NA	3.E-01
C9-C12 Aliphatic Hydrocarbons	8.70E-02	0.2	NA	NA	NA	8.3E-02	4.E-01	NA	4.E-01
C9-C10 Aromatic Hydrocarbons	ND	0.05	NA	ND	ND	ND	ND	ND	ND
Total					2.E-04		2.E+00	2.E-04	2.E+00

NA - Not available
NC - Not calculated
ND - Not detected

Exposure and Risk Estimates Associated With Inhalation of Volatile Compounds in Air
UniFirst Corporation
15 Olympia Avenue, Woburn, MA
Storage User - Long Term - Warehouse
Indoor Air
Volatilization from Indoor Air
Warehouse
IA-02

Receptor:	Storage User - Long Term - Warehou
Medium of Origin:	Indoor Air
Exposure Medium:	Indoor Air
Exposure Area:	Warehouse
Depth:	NA
Duration:	NA

$$C_{air} = \frac{C_{source}}{AF}$$

$$EC_{inh} = \frac{C_{air} \times ET \times EF \times ED}{AT}$$

$$HI_{inh} = \frac{EC_{inh}}{RfC}$$

$$Risk = EC_{inh} \times URF \times CF$$

Parameter	Definition	Units	Value	Comment
ET	Indoor Air Exposure Time	hrs/d	3	
EF	Indoor Air Exposure Frequency	ds/y	250	
ED	Indoor Air Exposure Duration	y	25	
ATc	Indoor Air Averaging Time - Cancer	hrs	683280	
ATn	Indoor Air Averaging Time - Non-Cancer	hrs	219000	
CF	Conversion Factor	ug/mg	1000	

Compound	EPC Indoor Air (mg/m3)	RfC (mg/m3)	URF 1/(ug/m3)	ADE-c mg/m3	Riskinh	ADE-nc mg/m3	HIinh	Risk (Indoor Air)	HI (Indoor Air)
Chloroform	2.63E-04	0.098	0.000023	7.2E-06	2.E-07	2.3E-05	2.E-04	2.E-07	2.E-04
1,1-Dichloroethane	4.05E-05	NA	0.0000016	1.1E-06	2.E-09	NA	NA	2.E-09	NA
1,2-Dichloroethane	6.07E-04	2.4	0.000026	1.7E-05	4.E-07	5.2E-05	2.E-05	4.E-07	2.E-05
1,1-Dichloroethene	3.95E-05	0.2	NA	NA	NA	3.4E-06	2.E-05	NA	2.E-05
Tetrachloroethene	4.34E-03	0.27	0.0000059	1.2E-04	7.E-07	3.7E-04	1.E-03	7.E-07	1.E-03
Trichloroethene	5.35E-05	NA	0.000002	1.5E-06	3.E-09	NA	NA	3.E-09	NA
Vinyl chloride	ND	0.1	0.0000044	ND	ND	ND	ND	ND	ND
trans-1,2-Dichloroethene	3.95E-05	0.06	NA	NA	NA	3.4E-06	6.E-05	NA	6.E-05
cis-1,2-Dichloroethene	3.95E-05	0.035	NA	NA	NA	3.4E-06	1.E-04	NA	1.E-04
1,1,1-Trichloroethane	3.00E-04	5	NA	NA	NA	2.6E-05	5.E-06	NA	5.E-06
Methylene chloride	3.68E-03	1	0.00000047	1.0E-04	5.E-08	3.2E-04	3.E-04	5.E-08	3.E-04
Carbon tetrachloride	4.84E-04	0.1	0.000006	1.3E-05	8.E-08	4.1E-05	4.E-04	8.E-08	4.E-04
Xylenes	2.97E-03	0.1	NA	NA	NA	2.5E-04	3.E-03	NA	3.E-03
Toluene	6.18E-03	5	NA	NA	NA	5.3E-04	1.E-04	NA	1.E-04
1,2-Dibromoethane	ND	0.009	0.0006	ND	ND	ND	ND	ND	ND
Benzene	9.00E-04	0.03	0.0000078	2.5E-05	2.E-07	7.7E-05	3.E-03	2.E-07	3.E-03
Bromoform	ND	NA	0.0000011	ND	ND	ND	ND	ND	ND
Ethylbenzene	8.59E-04	1	0.0000025	2.4E-05	6.E-08	7.4E-05	7.E-05	6.E-08	7.E-05
IsoPropylbenzene	ND	0.4	NA	ND	ND	ND	ND	ND	ND
trans-1,3-Dichloropropene	ND	0.02	0.000004	ND	ND	ND	ND	ND	ND
Naphthalene	2.19E-03	0.003	0.000034	6.0E-05	2.E-06	1.9E-04	6.E-02	2.E-06	6.E-02
1,3-Butadiene	5.30E-05	0.002	0.00003	1.5E-06	4.E-08	4.5E-06	2.E-03	4.E-08	2.E-03
Methyl tert-butyl ether	4.50E-04	3	0.00000026	1.2E-05	3.E-09	3.9E-05	1.E-05	3.E-09	1.E-05
1,1,2-Trichloroethane	ND	NA	0.000016	ND	ND	ND	ND	ND	ND
1,2,4-Trimethylbenzene	1.12E-03	0.007	NA	NA	NA	9.6E-05	1.E-02	NA	1.E-02
1,2-Dichloropropane	ND	0.004	0.00001	ND	ND	ND	ND	ND	ND
1,3-Dichlorobenzene	ND	0.2	NA	ND	ND	ND	ND	ND	ND
1,4-Dichlorobenzene	4.01E-02	0.8	0.000011	1.1E-03	1.E-05	3.4E-03	4.E-03	1.E-05	4.E-03
Bromodichloromethane	3.35E-05	NA	0.000037	9.2E-07	3.E-08	NA	NA	3.E-08	NA
Chlorobenzene	4.60E-05	0.05	NA	NA	NA	3.9E-06	8.E-05	NA	8.E-05
C5-C8 Aliphatic Hydrocarbons	6.60E-02	0.2	NA	NA	NA	5.7E-03	3.E-02	NA	3.E-02
C9-C12 Aliphatic Hydrocarbons	8.30E-02	0.2	NA	NA	NA	7.1E-03	4.E-02	NA	4.E-02
C9-C10 Aromatic Hydrocarbons	ND	0.05	NA	ND	ND	ND	ND	ND	ND
Total					2.E-05		2.E-01	2.E-05	2.E-01

NA - Not available
NC - Not calculated
ND - Not detected

Exposure and Risk Estimates Associated With Inhalation of Volatile Compounds in Air
UniFirst Corporation
15 Olympia Avenue, Woburn, MA
Storage User - Short Term - Warehouse
Indoor Air
Volatilization from Indoor Air
Warehouse
IA-02

Receptor:	Storage User - Short Term - Warehou
Medium of Origin:	Indoor Air
Exposure Medium:	Indoor Air
Exposure Area:	Warehouse
Depth:	NA
Duration:	NA

$$C_{air} = \frac{C_{source}}{AF}$$

$$EC_{inh} = \frac{C_{air} \times ET \times EF \times ED}{AT}$$

$$HI_{inh} = \frac{EC_{inh}}{RfC}$$

$$Risk = EC_{inh} \times URF \times CF$$

Parameter	Definition	Units	Value	Comment
ET	Indoor Air Exposure Time	hrs/d	3	
EF	Indoor Air Exposure Frequency	ds/y	250	
ED	Indoor Air Exposure Duration	y	5	
ATc	Indoor Air Averaging Time - Cancer	hrs	683280	
ATn	Indoor Air Averaging Time - Non-Cancer	hrs	43800	
CF	Conversion Factor	ug/mg	1000	

Compound	EPC Indoor Air (mg/m3)	RfC (mg/m3)	URF 1/(ug/m3)	ADE-c mg/m3	Riskinh	ADE-nc mg/m3	HIinh	Risk (Indoor Air)	HI (Indoor Air)
Chloroform	2.63E-04	0.098	0.000023	1.4E-06	3.E-08	2.3E-05	2.E-04	3.E-08	2.E-04
1,1-Dichloroethane	4.05E-05	NA	0.0000016	2.2E-07	4.E-10	NA	NA	4.E-10	NA
1,2-Dichloroethane	6.07E-04	2.4	0.000026	3.3E-06	9.E-08	5.2E-05	2.E-05	9.E-08	2.E-05
1,1-Dichloroethene	3.95E-05	0.2	NA	NA	NA	3.4E-06	2.E-05	NA	2.E-05
Tetrachloroethene	4.34E-03	0.27	0.0000059	2.4E-05	1.E-07	3.7E-04	1.E-03	1.E-07	1.E-03
Trichloroethene	5.35E-05	NA	0.000002	2.9E-07	6.E-10	NA	NA	6.E-10	NA
Vinyl chloride	ND	0.1	0.0000044	ND	ND	ND	ND	ND	ND
trans-1,2-Dichloroethene	3.95E-05	0.06	NA	NA	NA	3.4E-06	6.E-05	NA	6.E-05
cis-1,2-Dichloroethene	3.95E-05	0.035	NA	NA	NA	3.4E-06	1.E-04	NA	1.E-04
1,1,1-Trichloroethane	3.00E-04	5	NA	NA	NA	2.6E-05	5.E-06	NA	5.E-06
Methylene chloride	3.68E-03	1	0.00000047	2.0E-05	9.E-09	3.2E-04	3.E-04	9.E-09	3.E-04
Carbon tetrachloride	4.84E-04	0.1	0.000006	2.7E-06	2.E-08	4.1E-05	4.E-04	2.E-08	4.E-04
Xylenes	2.97E-03	0.1	NA	NA	NA	2.5E-04	3.E-03	NA	3.E-03
Toluene	6.18E-03	5	NA	NA	NA	5.3E-04	1.E-04	NA	1.E-04
1,2-Dibromoethane	ND	0.009	0.0006	ND	ND	ND	ND	ND	ND
Benzene	9.00E-04	0.03	0.0000078	4.9E-06	4.E-08	7.7E-05	3.E-03	4.E-08	3.E-03
Bromoform	ND	NA	0.0000011	ND	ND	ND	ND	ND	ND
Ethylbenzene	8.59E-04	1	0.0000025	4.7E-06	1.E-08	7.4E-05	7.E-05	1.E-08	7.E-05
IsoPropylbenzene	ND	0.4	NA	ND	ND	ND	ND	ND	ND
trans-1,3-Dichloropropene	ND	0.02	0.000004	ND	ND	ND	ND	ND	ND
Naphthalene	2.19E-03	0.003	0.000034	1.2E-05	4.E-07	1.9E-04	6.E-02	4.E-07	6.E-02
1,3-Butadiene	5.30E-05	0.002	0.00003	2.9E-07	9.E-09	4.5E-06	2.E-03	9.E-09	2.E-03
Methyl tert-butyl ether	4.50E-04	3	0.00000026	2.5E-06	6.E-10	3.9E-05	1.E-05	6.E-10	1.E-05
1,1,2-Trichloroethane	ND	NA	0.000016	ND	ND	ND	ND	ND	ND
1,2,4-Trimethylbenzene	1.12E-03	0.007	NA	NA	NA	9.6E-05	1.E-02	NA	1.E-02
1,2-Dichloropropane	ND	0.004	0.00001	ND	ND	ND	ND	ND	ND
1,3-Dichlorobenzene	ND	0.2	NA	ND	ND	ND	ND	ND	ND
1,4-Dichlorobenzene	4.01E-02	0.8	0.000011	2.2E-04	2.E-06	3.4E-03	4.E-03	2.E-06	4.E-03
Bromodichloromethane	3.35E-05	NA	0.000037	1.8E-07	7.E-09	NA	NA	7.E-09	NA
Chlorobenzene	4.60E-05	0.05	NA	NA	NA	3.9E-06	8.E-05	NA	8.E-05
C5-C8 Aliphatic Hydrocarbons	6.60E-02	0.2	NA	NA	NA	5.7E-03	3.E-02	NA	3.E-02
C9-C12 Aliphatic Hydrocarbons	8.30E-02	0.2	NA	NA	NA	7.1E-03	4.E-02	NA	4.E-02
C9-C10 Aromatic Hydrocarbons	ND	0.05	NA	ND	ND	ND	ND	ND	ND
Total					3.E-06		2.E-01	3.E-06	2.E-01

NA - Not available
NC - Not calculated
ND - Not detected

Exposure and Risk Estimates Associated With Inhalation of Volatile Compounds in Air
UniFirst Corporation
15 Olympia Avenue, Woburn, MA
Commercial/Industrial Worker - Long Term
Indoor Air
Volatilization from Indoor Air
Warehouse
IA-02

Receptor:	Commercial/Industrial Worker - Long
Medium of Origin:	Indoor Air
Exposure Medium:	Indoor Air
Exposure Area:	Warehouse
Depth:	NA
Duration:	NA

$$C_{air} = \frac{C_{source}}{AF}$$

$$EC_{inh} = \frac{C_{air} \times ET \times EF \times ED}{AT}$$

$$HI_{inh} = \frac{EC_{inh}}{RfC}$$

$$Risk = EC_{inh} \times URF \times CF$$

Parameter	Definition	Units	Value	Comment
ET	Indoor Air Exposure Time	hrs/d	8	
EF	Indoor Air Exposure Frequency	ds/y	250	
ED	Indoor Air Exposure Duration	y	25	
ATc	Indoor Air Averaging Time - Cancer	hrs	683280	
ATn	Indoor Air Averaging Time - Non-Cancer	hrs	219000	
CF	Conversion Factor	ug/mg	1000	

Compound	EPC Indoor Air (mg/m3)	RfC (mg/m3)	URF 1/(ug/m3)	ADE-c mg/m3	Riskinh	ADE-nc mg/m3	HIinh	Risk (Indoor Air)	HI (Indoor Air)
Chloroform	2.63E-04	0.098	0.000023	1.9E-05	4.E-07	6.0E-05	6.E-04	4.E-07	6.E-04
1,1-Dichloroethane	4.05E-05	NA	0.0000016	3.0E-06	5.E-09	NA	NA	5.E-09	NA
1,2-Dichloroethane	6.07E-04	2.4	0.000026	4.4E-05	1.E-06	1.4E-04	6.E-05	1.E-06	6.E-05
1,1-Dichloroethene	3.95E-05	0.2	NA	NA	NA	9.0E-06	5.E-05	NA	5.E-05
Tetrachloroethene	4.34E-03	0.27	0.0000059	3.2E-04	2.E-06	9.9E-04	4.E-03	2.E-06	4.E-03
Trichloroethene	5.35E-05	NA	0.000002	3.9E-06	8.E-09	NA	NA	8.E-09	NA
Vinyl chloride	ND	0.1	0.0000044	ND	ND	ND	ND	ND	ND
trans-1,2-Dichloroethene	3.95E-05	0.06	NA	NA	NA	9.0E-06	2.E-04	NA	2.E-04
cis-1,2-Dichloroethene	3.95E-05	0.035	NA	NA	NA	9.0E-06	3.E-04	NA	3.E-04
1,1,1-Trichloroethane	3.00E-04	5	NA	NA	NA	6.8E-05	1.E-05	NA	1.E-05
Methylene chloride	3.68E-03	1	0.00000047	2.7E-04	1.E-07	8.4E-04	8.E-04	1.E-07	8.E-04
Carbon tetrachloride	4.84E-04	0.1	0.000006	3.5E-05	2.E-07	1.1E-04	1.E-03	2.E-07	1.E-03
Xylenes	2.97E-03	0.1	NA	NA	NA	6.8E-04	7.E-03	NA	7.E-03
Toluene	6.18E-03	5	NA	NA	NA	1.4E-03	3.E-04	NA	3.E-04
1,2-Dibromoethane	ND	0.009	0.0006	ND	ND	ND	ND	ND	ND
Benzene	9.00E-04	0.03	0.0000078	6.6E-05	5.E-07	2.1E-04	7.E-03	5.E-07	7.E-03
Bromoform	ND	NA	0.0000011	ND	ND	ND	ND	ND	ND
Ethylbenzene	8.59E-04	1	0.0000025	6.3E-05	2.E-07	2.0E-04	2.E-04	2.E-07	2.E-04
IsoPropylbenzene	ND	0.4	NA	ND	ND	ND	ND	ND	ND
trans-1,3-Dichloropropene	ND	0.02	0.000004	ND	ND	ND	ND	ND	ND
Naphthalene	2.19E-03	0.003	0.000034	1.6E-04	5.E-06	5.0E-04	2.E-01	5.E-06	2.E-01
1,3-Butadiene	5.30E-05	0.002	0.00003	3.9E-06	1.E-07	1.2E-05	6.E-03	1.E-07	6.E-03
Methyl tert-butyl ether	4.50E-04	3	0.00000026	3.3E-05	9.E-09	1.0E-04	3.E-05	9.E-09	3.E-05
1,1,2-Trichloroethane	ND	NA	0.000016	ND	ND	ND	ND	ND	ND
1,2,4-Trimethylbenzene	1.12E-03	0.007	NA	NA	NA	2.6E-04	4.E-02	NA	4.E-02
1,2-Dichloropropane	ND	0.004	0.00001	ND	ND	ND	ND	ND	ND
1,3-Dichlorobenzene	ND	0.2	NA	ND	ND	ND	ND	ND	ND
1,4-Dichlorobenzene	4.01E-02	0.8	0.000011	2.9E-03	3.E-05	9.2E-03	1.E-02	3.E-05	1.E-02
Bromodichloromethane	3.35E-05	NA	0.000037	2.5E-06	9.E-08	NA	NA	9.E-08	NA
Chlorobenzene	4.60E-05	0.05	NA	NA	NA	1.1E-05	2.E-04	NA	2.E-04
C5-C8 Aliphatic Hydrocarbons	6.60E-02	0.2	NA	NA	NA	1.5E-02	8.E-02	NA	8.E-02
C9-C12 Aliphatic Hydrocarbons	8.30E-02	0.2	NA	NA	NA	1.9E-02	9.E-02	NA	9.E-02
C9-C10 Aromatic Hydrocarbons	ND	0.05	NA	ND	ND	ND	ND	ND	ND
Total					4.E-05		4.E-01	4.E-05	4.E-01

NA - Not available
NC - Not calculated
ND - Not detected

Exposure and Risk Estimates Associated With Inhalation of Volatile Compounds in Air
UniFirst Corporation
15 Olympia Avenue, Woburn, MA
Commercial/Industrial Worker - Short Term
Indoor Air
Volatilization from Indoor Air
Warehouse
IA-02

Receptor:	Commercial/Industrial Worker - Short
Medium of Origin:	Indoor Air
Exposure Medium:	Indoor Air
Exposure Area:	Warehouse
Depth:	NA
Duration:	NA

$$C_{air} = \frac{C_{source}}{AF}$$

$$EC_{inh} = \frac{C_{air} \times ET \times EF \times ED}{AT}$$

$$HI_{inh} = \frac{EC_{inh}}{RfC}$$

$$Risk = EC_{inh} \times URF \times CF$$

Parameter	Definition	Units	Value	Comment
ET	Indoor Air Exposure Time	hrs/d	8	
EF	Indoor Air Exposure Frequency	ds/y	250	
ED	Indoor Air Exposure Duration	y	5	
ATc	Indoor Air Averaging Time - Cancer	hrs	683280	
ATn	Indoor Air Averaging Time - Non-Cancer	hrs	43800	
CF	Conversion Factor	ug/mg	1000	

Compound	EPC Indoor Air (mg/m3)	RfC (mg/m3)	URF 1/(ug/m3)	ADE-c mg/m3	Riskinh	ADE-nc mg/m3	HIinh	Risk (Indoor Air)	HI (Indoor Air)
Chloroform	2.63E-04	0.098	0.000023	3.8E-06	9.E-08	6.0E-05	6.E-04	9.E-08	6.E-04
1,1-Dichloroethane	4.05E-05	NA	0.0000016	5.9E-07	9.E-10	NA	NA	9.E-10	NA
1,2-Dichloroethane	6.07E-04	2.4	0.000026	8.9E-06	2.E-07	1.4E-04	6.E-05	2.E-07	6.E-05
1,1-Dichloroethene	3.95E-05	0.2	NA	NA	NA	9.0E-06	5.E-05	NA	5.E-05
Tetrachloroethene	4.34E-03	0.27	0.0000059	6.4E-05	4.E-07	9.9E-04	4.E-03	4.E-07	4.E-03
Trichloroethene	5.35E-05	NA	0.000002	7.8E-07	2.E-09	NA	NA	2.E-09	NA
Vinyl chloride	ND	0.1	0.0000044	ND	ND	ND	ND	ND	ND
trans-1,2-Dichloroethene	3.95E-05	0.06	NA	NA	NA	9.0E-06	2.E-04	NA	2.E-04
cis-1,2-Dichloroethene	3.95E-05	0.035	NA	NA	NA	9.0E-06	3.E-04	NA	3.E-04
1,1,1-Trichloroethane	3.00E-04	5	NA	NA	NA	6.8E-05	1.E-05	NA	1.E-05
Methylene chloride	3.68E-03	1	0.00000047	5.4E-05	3.E-08	8.4E-04	8.E-04	3.E-08	8.E-04
Carbon tetrachloride	4.84E-04	0.1	0.000006	7.1E-06	4.E-08	1.1E-04	1.E-03	4.E-08	1.E-03
Xylenes	2.97E-03	0.1	NA	NA	NA	6.8E-04	7.E-03	NA	7.E-03
Toluene	6.18E-03	5	NA	NA	NA	1.4E-03	3.E-04	NA	3.E-04
1,2-Dibromoethane	ND	0.009	0.0006	ND	ND	ND	ND	ND	ND
Benzene	9.00E-04	0.03	0.0000078	1.3E-05	1.E-07	2.1E-04	7.E-03	1.E-07	7.E-03
Bromoform	ND	NA	0.0000011	ND	ND	ND	ND	ND	ND
Ethylbenzene	8.59E-04	1	0.0000025	1.3E-05	3.E-08	2.0E-04	2.E-04	3.E-08	2.E-04
IsoPropylbenzene	ND	0.4	NA	ND	ND	ND	ND	ND	ND
trans-1,3-Dichloropropene	ND	0.02	0.000004	ND	ND	ND	ND	ND	ND
Naphthalene	2.19E-03	0.003	0.000034	3.2E-05	1.E-06	5.0E-04	2.E-01	1.E-06	2.E-01
1,3-Butadiene	5.30E-05	0.002	0.00003	7.8E-07	2.E-08	1.2E-05	6.E-03	2.E-08	6.E-03
Methyl tert-butyl ether	4.50E-04	3	0.00000026	6.6E-06	2.E-09	1.0E-04	3.E-05	2.E-09	3.E-05
1,1,2-Trichloroethane	ND	NA	0.000016	ND	ND	ND	ND	ND	ND
1,2,4-Trimethylbenzene	1.12E-03	0.007	NA	NA	NA	2.6E-04	4.E-02	NA	4.E-02
1,2-Dichloropropane	ND	0.004	0.00001	ND	ND	ND	ND	ND	ND
1,3-Dichlorobenzene	ND	0.2	NA	ND	ND	ND	ND	ND	ND
1,4-Dichlorobenzene	4.01E-02	0.8	0.000011	5.9E-04	6.E-06	9.2E-03	1.E-02	6.E-06	1.E-02
Bromodichloromethane	3.35E-05	NA	0.000037	4.9E-07	2.E-08	NA	NA	2.E-08	NA
Chlorobenzene	4.60E-05	0.05	NA	NA	NA	1.1E-05	2.E-04	NA	2.E-04
C5-C8 Aliphatic Hydrocarbons	6.60E-02	0.2	NA	NA	NA	1.5E-02	8.E-02	NA	8.E-02
C9-C12 Aliphatic Hydrocarbons	8.30E-02	0.2	NA	NA	NA	1.9E-02	9.E-02	NA	9.E-02
C9-C10 Aromatic Hydrocarbons	ND	0.05	NA	ND	ND	ND	ND	ND	ND
Total					8.E-06		4.E-01	8.E-06	4.E-01

NA - Not available
NC - Not calculated
ND - Not detected

Exposure and Risk Estimates Associated With Inhalation of Volatile Compounds in Air
UniFirst Corporation
15 Olympia Avenue, Woburn, MA
Resident - Long Term
Indoor Air
Volatilization from Indoor Air
Warehouse
IA-02

Receptor:	Resident - Long Term
Medium of Origin:	Indoor Air
Exposure Medium:	Indoor Air
Exposure Area:	Warehouse
Depth:	NA
Duration:	NA

$$C_{air} = \frac{C_{source}}{AF}$$

$$EC_{inh} = \frac{C_{air} \times ET \times EF \times ED}{AT}$$

$$HI_{inh} = \frac{EC_{inh}}{RfC}$$

$$Risk = EC_{inh} \times URF \times CF$$

Parameter	Definition	Units	Value	Comment
ET	Indoor Air Exposure Time	hrs/d	24	
EF	Indoor Air Exposure Frequency	ds/y	350	
ED	Indoor Air Exposure Duration	y	30	
ATc	Indoor Air Averaging Time - Cancer	hrs	683280	
ATn	Indoor Air Averaging Time - Non-Cancer	hrs	262800	
CF	Conversion Factor	ug/mg	1000	

Compound	EPC Indoor Air (mg/m3)	RfC (mg/m3)	URF 1/(ug/m3)	ADE-c mg/m3	Riskinh	ADE-nc mg/m3	HIinh	Risk (Indoor Air)	HI (Indoor Air)
Chloroform	2.63E-04	0.098	0.000023	9.7E-05	2.E-06	2.5E-04	3.E-03	2.E-06	3.E-03
1,1-Dichloroethane	4.05E-05	NA	0.0000016	1.5E-05	2.E-08	NA	NA	2.E-08	NA
1,2-Dichloroethane	6.07E-04	2.4	0.000026	2.2E-04	6.E-06	5.8E-04	2.E-04	6.E-06	2.E-04
1,1-Dichloroethene	3.95E-05	0.2	NA	NA	NA	3.8E-05	2.E-04	NA	2.E-04
Tetrachloroethene	4.34E-03	0.27	0.0000059	1.6E-03	9.E-06	4.2E-03	2.E-02	9.E-06	2.E-02
Trichloroethene	5.35E-05	NA	0.000002	2.0E-05	4.E-08	NA	NA	4.E-08	NA
Vinyl chloride	ND	0.1	0.0000044	ND	ND	ND	ND	ND	ND
trans-1,2-Dichloroethene	3.95E-05	0.06	NA	NA	NA	3.8E-05	6.E-04	NA	6.E-04
cis-1,2-Dichloroethene	3.95E-05	0.035	NA	NA	NA	3.8E-05	1.E-03	NA	1.E-03
1,1,1-Trichloroethane	3.00E-04	5	NA	NA	NA	2.9E-04	6.E-05	NA	6.E-05
Methylene chloride	3.68E-03	1	0.00000047	1.4E-03	6.E-07	3.5E-03	4.E-03	6.E-07	4.E-03
Carbon tetrachloride	4.84E-04	0.1	0.000006	1.8E-04	1.E-06	4.6E-04	5.E-03	1.E-06	5.E-03
Xylenes	2.97E-03	0.1	NA	NA	NA	2.8E-03	3.E-02	NA	3.E-02
Toluene	6.18E-03	5	NA	NA	NA	5.9E-03	1.E-03	NA	1.E-03
1,2-Dibromoethane	ND	0.009	0.0006	ND	ND	ND	ND	ND	ND
Benzene	9.00E-04	0.03	0.0000078	3.3E-04	3.E-06	8.6E-04	3.E-02	3.E-06	3.E-02
Bromoform	ND	NA	0.0000011	ND	ND	ND	ND	ND	ND
Ethylbenzene	8.59E-04	1	0.0000025	3.2E-04	8.E-07	8.2E-04	8.E-04	8.E-07	8.E-04
IsoPropylbenzene	ND	0.4	NA	ND	ND	ND	ND	ND	ND
trans-1,3-Dichloropropene	ND	0.02	0.000004	ND	ND	ND	ND	ND	ND
Naphthalene	2.19E-03	0.003	0.000034	8.1E-04	3.E-05	2.1E-03	7.E-01	3.E-05	7.E-01
1,3-Butadiene	5.30E-05	0.002	0.00003	2.0E-05	6.E-07	5.1E-05	3.E-02	6.E-07	3.E-02
Methyl tert-butyl ether	4.50E-04	3	0.00000026	1.7E-04	4.E-08	4.3E-04	1.E-04	4.E-08	1.E-04
1,1,2-Trichloroethane	ND	NA	0.000016	ND	ND	ND	ND	ND	ND
1,2,4-Trimethylbenzene	1.12E-03	0.007	NA	NA	NA	1.1E-03	2.E-01	NA	2.E-01
1,2-Dichloropropane	ND	0.004	0.00001	ND	ND	ND	ND	ND	ND
1,3-Dichlorobenzene	ND	0.2	NA	ND	ND	ND	ND	ND	ND
1,4-Dichlorobenzene	4.01E-02	0.8	0.000011	1.5E-02	2.E-04	3.8E-02	5.E-02	2.E-04	5.E-02
Bromodichloromethane	3.35E-05	NA	0.000037	1.2E-05	5.E-07	NA	NA	5.E-07	NA
Chlorobenzene	4.60E-05	0.05	NA	NA	NA	4.4E-05	9.E-04	NA	9.E-04
C5-C8 Aliphatic Hydrocarbons	6.60E-02	0.2	NA	NA	NA	6.3E-02	3.E-01	NA	3.E-01
C9-C12 Aliphatic Hydrocarbons	8.30E-02	0.2	NA	NA	NA	8.0E-02	4.E-01	NA	4.E-01
C9-C10 Aromatic Hydrocarbons	ND	0.05	NA	ND	ND	ND	ND	ND	ND
Total					2.E-04		2.E+00	2.E-04	2.E+00

NA - Not available
NC - Not calculated
ND - Not detected

Exposure and Risk Estimates Associated With Inhalation of Volatile Compounds in Air
UniFirst Corporation
15 Olympia Avenue, Woburn, MA
Storage User - Long Term - Warehouse
Indoor Air
Volatilization from Indoor Air
Warehouse
IA-03

Receptor:	Storage User - Long Term - Warehou
Medium of Origin:	Indoor Air
Exposure Medium:	Indoor Air
Exposure Area:	Warehouse
Depth:	NA
Duration:	NA

$$C_{air} = \frac{C_{source}}{AF}$$

$$EC_{inh} = \frac{C_{air} \times ET \times EF \times ED}{AT}$$

$$HI_{inh} = \frac{EC_{inh}}{RfC}$$

$$Risk = EC_{inh} \times URF \times CF$$

Parameter	Definition	Units	Value	Comment
ET	Indoor Air Exposure Time	hrs/d	3	
EF	Indoor Air Exposure Frequency	ds/y	250	
ED	Indoor Air Exposure Duration	y	25	
ATc	Indoor Air Averaging Time - Cancer	hrs	683280	
ATn	Indoor Air Averaging Time - Non-Cancer	hrs	219000	
CF	Conversion Factor	ug/mg	1000	

Compound	EPC Indoor Air (mg/m3)	RfC (mg/m3)	URF 1/(ug/m3)	ADE-c mg/m3	Riskinh	ADE-nc mg/m3	HIinh	Risk (Indoor Air)	HI (Indoor Air)
Chloroform	1.76E-04	0.098	0.000023	4.8E-06	1.E-07	1.5E-05	2.E-04	1.E-07	2.E-04
1,1-Dichloroethane	4.05E-05	NA	0.0000016	1.1E-06	2.E-09	NA	NA	2.E-09	NA
1,2-Dichloroethane	6.51E-04	2.4	0.000026	1.8E-05	5.E-07	5.6E-05	2.E-05	5.E-07	2.E-05
1,1-Dichloroethene	3.95E-05	0.2	NA	NA	NA	3.4E-06	2.E-05	NA	2.E-05
Tetrachloroethene	8.75E-03	0.27	0.0000059	2.4E-04	1.E-06	7.5E-04	3.E-03	1.E-06	3.E-03
Trichloroethene	1.13E-04	NA	0.000002	3.1E-06	6.E-09	NA	NA	6.E-09	NA
Vinyl chloride	ND	0.1	0.0000044	ND	ND	ND	ND	ND	ND
trans-1,2-Dichloroethene	3.95E-05	0.06	NA	NA	NA	3.4E-06	6.E-05	NA	6.E-05
cis-1,2-Dichloroethene	3.95E-05	0.035	NA	NA	NA	3.4E-06	1.E-04	NA	1.E-04
1,1,1-Trichloroethane	2.94E-04	5	NA	NA	NA	2.5E-05	5.E-06	NA	5.E-06
Methylene chloride	2.72E-03	1	0.00000047	7.5E-05	4.E-08	2.3E-04	2.E-04	4.E-08	2.E-04
Carbon tetrachloride	4.08E-04	0.1	0.000006	1.1E-05	7.E-08	3.5E-05	3.E-04	7.E-08	3.E-04
Xylenes	3.22E-03	0.1	NA	NA	NA	2.8E-04	3.E-03	NA	3.E-03
Toluene	8.77E-03	5	NA	NA	NA	7.5E-04	2.E-04	NA	2.E-04
1,2-Dibromoethane	ND	0.009	0.0006	ND	ND	ND	ND	ND	ND
Benzene	8.62E-04	0.03	0.0000078	2.4E-05	2.E-07	7.4E-05	2.E-03	2.E-07	2.E-03
Bromoform	ND	NA	0.0000011	ND	ND	ND	ND	ND	ND
Ethylbenzene	8.89E-04	1	0.0000025	2.4E-05	6.E-08	7.6E-05	8.E-05	6.E-08	8.E-05
IsoPropylbenzene	ND	0.4	NA	ND	ND	ND	ND	ND	ND
trans-1,3-Dichloropropene	ND	0.02	0.000004	ND	ND	ND	ND	ND	ND
Naphthalene	2.10E-03	0.003	0.000034	5.8E-05	2.E-06	1.8E-04	6.E-02	2.E-06	6.E-02
1,3-Butadiene	4.40E-05	0.002	0.00003	1.2E-06	4.E-08	3.8E-06	2.E-03	4.E-08	2.E-03
Methyl tert-butyl ether	4.43E-04	3	0.00000026	1.2E-05	3.E-09	3.8E-05	1.E-05	3.E-09	1.E-05
1,1,2-Trichloroethane	ND	NA	0.000016	ND	ND	ND	ND	ND	ND
1,2,4-Trimethylbenzene	1.13E-03	0.007	NA	NA	NA	9.7E-05	1.E-02	NA	1.E-02
1,2-Dichloropropane	ND	0.004	0.00001	ND	ND	ND	ND	ND	ND
1,3-Dichlorobenzene	ND	0.2	NA	ND	ND	ND	ND	ND	ND
1,4-Dichlorobenzene	1.58E-02	0.8	0.000011	4.3E-04	5.E-06	1.4E-03	2.E-03	5.E-06	2.E-03
Bromodichloromethane	3.35E-05	NA	0.000037	9.2E-07	3.E-08	NA	NA	3.E-08	NA
Chlorobenzene	4.60E-05	0.05	NA	NA	NA	3.9E-06	8.E-05	NA	8.E-05
C5-C8 Aliphatic Hydrocarbons	6.10E-02	0.2	NA	NA	NA	5.2E-03	3.E-02	NA	3.E-02
C9-C12 Aliphatic Hydrocarbons	6.10E-02	0.2	NA	NA	NA	5.2E-03	3.E-02	NA	3.E-02
C9-C10 Aromatic Hydrocarbons	ND	0.05	NA	ND	ND	ND	ND	ND	ND
Total					9.E-06		1.E-01	9.E-06	1.E-01

NA - Not available
NC - Not calculated
ND - Not detected

Exposure and Risk Estimates Associated With Inhalation of Volatile Compounds in Air
UniFirst Corporation
15 Olympia Avenue, Woburn, MA
Storage User - Short Term - Warehouse
Indoor Air
Volatilization from Indoor Air
Warehouse
IA-03

Receptor:	Storage User - Short Term - Warehou
Medium of Origin:	Indoor Air
Exposure Medium:	Indoor Air
Exposure Area:	Warehouse
Depth:	NA
Duration:	NA

$$C_{air} = \frac{C_{source}}{AF}$$

$$EC_{inh} = \frac{C_{air} \times ET \times EF \times ED}{AT}$$

$$HI_{inh} = \frac{EC_{inh}}{RfC}$$

$$Risk = EC_{inh} \times URF \times CF$$

Parameter	Definition	Units	Value	Comment
ET	Indoor Air Exposure Time	hrs/d	3	
EF	Indoor Air Exposure Frequency	ds/y	250	
ED	Indoor Air Exposure Duration	y	5	
ATc	Indoor Air Averaging Time - Cancer	hrs	683280	
ATn	Indoor Air Averaging Time - Non-Cancer	hrs	43800	
CF	Conversion Factor	ug/mg	1000	

Compound	EPC Indoor Air (mg/m3)	RfC (mg/m3)	URF 1/(ug/m3)	ADE-c mg/m3	Riskinh	ADE-nc mg/m3	HIinh	Risk (Indoor Air)	HI (Indoor Air)
Chloroform	1.76E-04	0.098	0.000023	9.7E-07	2.E-08	1.5E-05	2.E-04	2.E-08	2.E-04
1,1-Dichloroethane	4.05E-05	NA	0.0000016	2.2E-07	4.E-10	NA	NA	4.E-10	NA
1,2-Dichloroethane	6.51E-04	2.4	0.000026	3.6E-06	9.E-08	5.6E-05	2.E-05	9.E-08	2.E-05
1,1-Dichloroethene	3.95E-05	0.2	NA	NA	NA	3.4E-06	2.E-05	NA	2.E-05
Tetrachloroethene	8.75E-03	0.27	0.0000059	4.8E-05	3.E-07	7.5E-04	3.E-03	3.E-07	3.E-03
Trichloroethene	1.13E-04	NA	0.000002	6.2E-07	1.E-09	NA	NA	1.E-09	NA
Vinyl chloride	ND	0.1	0.0000044	ND	ND	ND	ND	ND	ND
trans-1,2-Dichloroethene	3.95E-05	0.06	NA	NA	NA	3.4E-06	6.E-05	NA	6.E-05
cis-1,2-Dichloroethene	3.95E-05	0.035	NA	NA	NA	3.4E-06	1.E-04	NA	1.E-04
1,1,1-Trichloroethane	2.94E-04	5	NA	NA	NA	2.5E-05	5.E-06	NA	5.E-06
Methylene chloride	2.72E-03	1	0.00000047	1.5E-05	7.E-09	2.3E-04	2.E-04	7.E-09	2.E-04
Carbon tetrachloride	4.08E-04	0.1	0.000006	2.2E-06	1.E-08	3.5E-05	3.E-04	1.E-08	3.E-04
Xylenes	3.22E-03	0.1	NA	NA	NA	2.8E-04	3.E-03	NA	3.E-03
Toluene	8.77E-03	5	NA	NA	NA	7.5E-04	2.E-04	NA	2.E-04
1,2-Dibromoethane	ND	0.009	0.0006	ND	ND	ND	ND	ND	ND
Benzene	8.62E-04	0.03	0.0000078	4.7E-06	4.E-08	7.4E-05	2.E-03	4.E-08	2.E-03
Bromoform	ND	NA	0.0000011	ND	ND	ND	ND	ND	ND
Ethylbenzene	8.89E-04	1	0.0000025	4.9E-06	1.E-08	7.6E-05	8.E-05	1.E-08	8.E-05
IsoPropylbenzene	ND	0.4	NA	ND	ND	ND	ND	ND	ND
trans-1,3-Dichloropropene	ND	0.02	0.000004	ND	ND	ND	ND	ND	ND
Naphthalene	2.10E-03	0.003	0.000034	1.2E-05	4.E-07	1.8E-04	6.E-02	4.E-07	6.E-02
1,3-Butadiene	4.40E-05	0.002	0.00003	2.4E-07	7.E-09	3.8E-06	2.E-03	7.E-09	2.E-03
Methyl tert-butyl ether	4.43E-04	3	0.00000026	2.4E-06	6.E-10	3.8E-05	1.E-05	6.E-10	1.E-05
1,1,2-Trichloroethane	ND	NA	0.000016	ND	ND	ND	ND	ND	ND
1,2,4-Trimethylbenzene	1.13E-03	0.007	NA	NA	NA	9.7E-05	1.E-02	NA	1.E-02
1,2-Dichloropropane	ND	0.004	0.00001	ND	ND	ND	ND	ND	ND
1,3-Dichlorobenzene	ND	0.2	NA	ND	ND	ND	ND	ND	ND
1,4-Dichlorobenzene	1.58E-02	0.8	0.000011	8.7E-05	1.E-06	1.4E-03	2.E-03	1.E-06	2.E-03
Bromodichloromethane	3.35E-05	NA	0.000037	1.8E-07	7.E-09	NA	NA	7.E-09	NA
Chlorobenzene	4.60E-05	0.05	NA	NA	NA	3.9E-06	8.E-05	NA	8.E-05
C5-C8 Aliphatic Hydrocarbons	6.10E-02	0.2	NA	NA	NA	5.2E-03	3.E-02	NA	3.E-02
C9-C12 Aliphatic Hydrocarbons	6.10E-02	0.2	NA	NA	NA	5.2E-03	3.E-02	NA	3.E-02
C9-C10 Aromatic Hydrocarbons	ND	0.05	NA	ND	ND	ND	ND	ND	ND
Total					2.E-06		1.E-01	2.E-06	1.E-01

NA - Not available
NC - Not calculated
ND - Not detected

Exposure and Risk Estimates Associated With Inhalation of Volatile Compounds in Air
UniFirst Corporation
15 Olympia Avenue, Woburn, MA
Commercial/Industrial Worker - Long Term
Indoor Air
Volatilization from Indoor Air
Warehouse
IA-03

Receptor:	Commercial/Industrial Worker - Long
Medium of Origin:	Indoor Air
Exposure Medium:	Indoor Air
Exposure Area:	Warehouse
Depth:	NA
Duration:	NA

$$C_{air} = \frac{C_{source}}{AF}$$

$$EC_{inh} = \frac{C_{air} \times ET \times EF \times ED}{AT}$$

$$HI_{inh} = \frac{EC_{inh}}{RfC}$$

$$Risk = EC_{inh} \times URF \times CF$$

Parameter	Definition	Units	Value	Comment
ET	Indoor Air Exposure Time	hrs/d	8	
EF	Indoor Air Exposure Frequency	ds/y	250	
ED	Indoor Air Exposure Duration	y	25	
ATc	Indoor Air Averaging Time - Cancer	hrs	683280	
ATn	Indoor Air Averaging Time - Non-Cancer	hrs	219000	
CF	Conversion Factor	ug/mg	1000	

Compound	EPC Indoor Air (mg/m3)	RfC (mg/m3)	URF 1/(ug/m3)	ADE-c mg/m3	Riskinh	ADE-nc mg/m3	HIinh	Risk (Indoor Air)	HI (Indoor Air)
Chloroform	1.76E-04	0.098	0.000023	1.3E-05	3.E-07	4.0E-05	4.E-04	3.E-07	4.E-04
1,1-Dichloroethane	4.05E-05	NA	0.0000016	3.0E-06	5.E-09	NA	NA	5.E-09	NA
1,2-Dichloroethane	6.51E-04	2.4	0.000026	4.8E-05	1.E-06	1.5E-04	6.E-05	1.E-06	6.E-05
1,1-Dichloroethene	3.95E-05	0.2	NA	NA	NA	9.0E-06	5.E-05	NA	5.E-05
Tetrachloroethene	8.75E-03	0.27	0.0000059	6.4E-04	4.E-06	2.0E-03	7.E-03	4.E-06	7.E-03
Trichloroethene	1.13E-04	NA	0.000002	8.3E-06	2.E-08	NA	NA	2.E-08	NA
Vinyl chloride	ND	0.1	0.0000044	ND	ND	ND	ND	ND	ND
trans-1,2-Dichloroethene	3.95E-05	0.06	NA	NA	NA	9.0E-06	2.E-04	NA	2.E-04
cis-1,2-Dichloroethene	3.95E-05	0.035	NA	NA	NA	9.0E-06	3.E-04	NA	3.E-04
1,1,1-Trichloroethane	2.94E-04	5	NA	NA	NA	6.7E-05	1.E-05	NA	1.E-05
Methylene chloride	2.72E-03	1	0.00000047	2.0E-04	9.E-08	6.2E-04	6.E-04	9.E-08	6.E-04
Carbon tetrachloride	4.08E-04	0.1	0.000006	3.0E-05	2.E-07	9.3E-05	9.E-04	2.E-07	9.E-04
Xylenes	3.22E-03	0.1	NA	NA	NA	7.4E-04	7.E-03	NA	7.E-03
Toluene	8.77E-03	5	NA	NA	NA	2.0E-03	4.E-04	NA	4.E-04
1,2-Dibromoethane	ND	0.009	0.0006	ND	ND	ND	ND	ND	ND
Benzene	8.62E-04	0.03	0.0000078	6.3E-05	5.E-07	2.0E-04	7.E-03	5.E-07	7.E-03
Bromoform	ND	NA	0.0000011	ND	ND	ND	ND	ND	ND
Ethylbenzene	8.89E-04	1	0.0000025	6.5E-05	2.E-07	2.0E-04	2.E-04	2.E-07	2.E-04
IsoPropylbenzene	ND	0.4	NA	ND	ND	ND	ND	ND	ND
trans-1,3-Dichloropropene	ND	0.02	0.000004	ND	ND	ND	ND	ND	ND
Naphthalene	2.10E-03	0.003	0.000034	1.5E-04	5.E-06	4.8E-04	2.E-01	5.E-06	2.E-01
1,3-Butadiene	4.40E-05	0.002	0.00003	3.2E-06	1.E-07	1.0E-05	5.E-03	1.E-07	5.E-03
Methyl tert-butyl ether	4.43E-04	3	0.00000026	3.2E-05	8.E-09	1.0E-04	3.E-05	8.E-09	3.E-05
1,1,2-Trichloroethane	ND	NA	0.000016	ND	ND	ND	ND	ND	ND
1,2,4-Trimethylbenzene	1.13E-03	0.007	NA	NA	NA	2.6E-04	4.E-02	NA	4.E-02
1,2-Dichloropropane	ND	0.004	0.00001	ND	ND	ND	ND	ND	ND
1,3-Dichlorobenzene	ND	0.2	NA	ND	ND	ND	ND	ND	ND
1,4-Dichlorobenzene	1.58E-02	0.8	0.000011	1.2E-03	1.E-05	3.6E-03	5.E-03	1.E-05	5.E-03
Bromodichloromethane	3.35E-05	NA	0.000037	2.5E-06	9.E-08	NA	NA	9.E-08	NA
Chlorobenzene	4.60E-05	0.05	NA	NA	NA	1.1E-05	2.E-04	NA	2.E-04
C5-C8 Aliphatic Hydrocarbons	6.10E-02	0.2	NA	NA	NA	1.4E-02	7.E-02	NA	7.E-02
C9-C12 Aliphatic Hydrocarbons	6.10E-02	0.2	NA	NA	NA	1.4E-02	7.E-02	NA	7.E-02
C9-C10 Aromatic Hydrocarbons	ND	0.05	NA	ND	ND	ND	ND	ND	ND
Total					2.E-05		4.E-01	2.E-05	4.E-01

NA - Not available
NC - Not calculated
ND - Not detected

Exposure and Risk Estimates Associated With Inhalation of Volatile Compounds in Air
UniFirst Corporation
15 Olympia Avenue, Woburn, MA
Commercial/Industrial Worker - Short Term
Indoor Air
Volatilization from Indoor Air
Warehouse
IA-03

Receptor:	Commercial/Industrial Worker - Short
Medium of Origin:	Indoor Air
Exposure Medium:	Indoor Air
Exposure Area:	Warehouse
Depth:	NA
Duration:	NA

$$C_{air} = \frac{C_{source}}{AF}$$

$$EC_{inh} = \frac{C_{air} \times ET \times EF \times ED}{AT}$$

$$HI_{inh} = \frac{EC_{inh}}{RfC}$$

$$Risk = EC_{inh} \times URF \times CF$$

Parameter	Definition	Units	Value	Comment
ET	Indoor Air Exposure Time	hrs/d	8	
EF	Indoor Air Exposure Frequency	ds/y	250	
ED	Indoor Air Exposure Duration	y	5	
ATc	Indoor Air Averaging Time - Cancer	hrs	683280	
ATn	Indoor Air Averaging Time - Non-Cancer	hrs	43800	
CF	Conversion Factor	ug/mg	1000	

Compound	EPC Indoor Air (mg/m3)	RfC (mg/m3)	URF 1/(ug/m3)	ADE-c mg/m3	Riskinh	ADE-nc mg/m3	HIinh	Risk (Indoor Air)	HI (Indoor Air)
Chloroform	1.76E-04	0.098	0.000023	2.6E-06	6.E-08	4.0E-05	4.E-04	6.E-08	4.E-04
1,1-Dichloroethane	4.05E-05	NA	0.0000016	5.9E-07	9.E-10	NA	NA	9.E-10	NA
1,2-Dichloroethane	6.51E-04	2.4	0.000026	9.5E-06	2.E-07	1.5E-04	6.E-05	2.E-07	6.E-05
1,1-Dichloroethene	3.95E-05	0.2	NA	NA	NA	9.0E-06	5.E-05	NA	5.E-05
Tetrachloroethene	8.75E-03	0.27	0.0000059	1.3E-04	8.E-07	2.0E-03	7.E-03	8.E-07	7.E-03
Trichloroethene	1.13E-04	NA	0.000002	1.7E-06	3.E-09	NA	NA	3.E-09	NA
Vinyl chloride	ND	0.1	0.0000044	ND	ND	ND	ND	ND	ND
trans-1,2-Dichloroethene	3.95E-05	0.06	NA	NA	NA	9.0E-06	2.E-04	NA	2.E-04
cis-1,2-Dichloroethene	3.95E-05	0.035	NA	NA	NA	9.0E-06	3.E-04	NA	3.E-04
1,1,1-Trichloroethane	2.94E-04	5	NA	NA	NA	6.7E-05	1.E-05	NA	1.E-05
Methylene chloride	2.72E-03	1	0.00000047	4.0E-05	2.E-08	6.2E-04	6.E-04	2.E-08	6.E-04
Carbon tetrachloride	4.08E-04	0.1	0.000006	6.0E-06	4.E-08	9.3E-05	9.E-04	4.E-08	9.E-04
Xylenes	3.22E-03	0.1	NA	NA	NA	7.4E-04	7.E-03	NA	7.E-03
Toluene	8.77E-03	5	NA	NA	NA	2.0E-03	4.E-04	NA	4.E-04
1,2-Dibromoethane	ND	0.009	0.0006	ND	ND	ND	ND	ND	ND
Benzene	8.62E-04	0.03	0.0000078	1.3E-05	1.E-07	2.0E-04	7.E-03	1.E-07	7.E-03
Bromoform	ND	NA	0.0000011	ND	ND	ND	ND	ND	ND
Ethylbenzene	8.89E-04	1	0.0000025	1.3E-05	3.E-08	2.0E-04	2.E-04	3.E-08	2.E-04
IsoPropylbenzene	ND	0.4	NA	ND	ND	ND	ND	ND	ND
trans-1,3-Dichloropropene	ND	0.02	0.000004	ND	ND	ND	ND	ND	ND
Naphthalene	2.10E-03	0.003	0.000034	3.1E-05	1.E-06	4.8E-04	2.E-01	1.E-06	2.E-01
1,3-Butadiene	4.40E-05	0.002	0.00003	6.4E-07	2.E-08	1.0E-05	5.E-03	2.E-08	5.E-03
Methyl tert-butyl ether	4.43E-04	3	0.00000026	6.5E-06	2.E-09	1.0E-04	3.E-05	2.E-09	3.E-05
1,1,2-Trichloroethane	ND	NA	0.000016	ND	ND	ND	ND	ND	ND
1,2,4-Trimethylbenzene	1.13E-03	0.007	NA	NA	NA	2.6E-04	4.E-02	NA	4.E-02
1,2-Dichloropropane	ND	0.004	0.00001	ND	ND	ND	ND	ND	ND
1,3-Dichlorobenzene	ND	0.2	NA	ND	ND	ND	ND	ND	ND
1,4-Dichlorobenzene	1.58E-02	0.8	0.000011	2.3E-04	3.E-06	3.6E-03	5.E-03	3.E-06	5.E-03
Bromodichloromethane	3.35E-05	NA	0.000037	4.9E-07	2.E-08	NA	NA	2.E-08	NA
Chlorobenzene	4.60E-05	0.05	NA	NA	NA	1.1E-05	2.E-04	NA	2.E-04
C5-C8 Aliphatic Hydrocarbons	6.10E-02	0.2	NA	NA	NA	1.4E-02	7.E-02	NA	7.E-02
C9-C12 Aliphatic Hydrocarbons	6.10E-02	0.2	NA	NA	NA	1.4E-02	7.E-02	NA	7.E-02
C9-C10 Aromatic Hydrocarbons	ND	0.05	NA	ND	ND	ND	ND	ND	ND
Total					5.E-06		4.E-01	5.E-06	4.E-01

NA - Not available
NC - Not calculated
ND - Not detected

Exposure and Risk Estimates Associated With Inhalation of Volatile Compounds in Air
UniFirst Corporation
15 Olympia Avenue, Woburn, MA
Resident - Long Term
Indoor Air
Volatilization from Indoor Air
Warehouse
IA-03

Receptor:	Resident - Long Term
Medium of Origin:	Indoor Air
Exposure Medium:	Indoor Air
Exposure Area:	Warehouse
Depth:	NA
Duration:	NA

$$C_{air} = \frac{C_{source}}{AF}$$

$$EC_{inh} = \frac{C_{air} \times ET \times EF \times ED}{AT}$$

$$HI_{inh} = \frac{EC_{inh}}{RfC}$$

$$Risk = EC_{inh} \times URF \times CF$$

Parameter	Definition	Units	Value	Comment
ET	Indoor Air Exposure Time	hrs/d	24	
EF	Indoor Air Exposure Frequency	ds/y	350	
ED	Indoor Air Exposure Duration	y	30	
ATc	Indoor Air Averaging Time - Cancer	hrs	683280	
ATn	Indoor Air Averaging Time - Non-Cancer	hrs	262800	
CF	Conversion Factor	ug/mg	1000	

Compound	EPC Indoor Air (mg/m3)	RfC (mg/m3)	URF 1/(ug/m3)	ADE-c mg/m3	Riskinh	ADE-nc mg/m3	HIinh	Risk (Indoor Air)	HI (Indoor Air)
Chloroform	1.76E-04	0.098	0.000023	6.5E-05	1.E-06	1.7E-04	2.E-03	1.E-06	2.E-03
1,1-Dichloroethane	4.05E-05	NA	0.0000016	1.5E-05	2.E-08	NA	NA	2.E-08	NA
1,2-Dichloroethane	6.51E-04	2.4	0.000026	2.4E-04	6.E-06	6.2E-04	3.E-04	6.E-06	3.E-04
1,1-Dichloroethene	3.95E-05	0.2	NA	NA	NA	3.8E-05	2.E-04	NA	2.E-04
Tetrachloroethene	8.75E-03	0.27	0.0000059	3.2E-03	2.E-05	8.4E-03	3.E-02	2.E-05	3.E-02
Trichloroethene	1.13E-04	NA	0.000002	4.2E-05	8.E-08	NA	NA	8.E-08	NA
Vinyl chloride	ND	0.1	0.0000044	ND	ND	ND	ND	ND	ND
trans-1,2-Dichloroethene	3.95E-05	0.06	NA	NA	NA	3.8E-05	6.E-04	NA	6.E-04
cis-1,2-Dichloroethene	3.95E-05	0.035	NA	NA	NA	3.8E-05	1.E-03	NA	1.E-03
1,1,1-Trichloroethane	2.94E-04	5	NA	NA	NA	2.8E-04	6.E-05	NA	6.E-05
Methylene chloride	2.72E-03	1	0.00000047	1.0E-03	5.E-07	2.6E-03	3.E-03	5.E-07	3.E-03
Carbon tetrachloride	4.08E-04	0.1	0.000006	1.5E-04	9.E-07	3.9E-04	4.E-03	9.E-07	4.E-03
Xylenes	3.22E-03	0.1	NA	NA	NA	3.1E-03	3.E-02	NA	3.E-02
Toluene	8.77E-03	5	NA	NA	NA	8.4E-03	2.E-03	NA	2.E-03
1,2-Dibromoethane	ND	0.009	0.0006	ND	ND	ND	ND	ND	ND
Benzene	8.62E-04	0.03	0.0000078	3.2E-04	2.E-06	8.3E-04	3.E-02	2.E-06	3.E-02
Bromoform	ND	NA	0.0000011	ND	ND	ND	ND	ND	ND
Ethylbenzene	8.89E-04	1	0.0000025	3.3E-04	8.E-07	8.5E-04	9.E-04	8.E-07	9.E-04
IsoPropylbenzene	ND	0.4	NA	ND	ND	ND	ND	ND	ND
trans-1,3-Dichloropropene	ND	0.02	0.000004	ND	ND	ND	ND	ND	ND
Naphthalene	2.10E-03	0.003	0.000034	7.7E-04	3.E-05	2.0E-03	7.E-01	3.E-05	7.E-01
1,3-Butadiene	4.40E-05	0.002	0.00003	1.6E-05	5.E-07	4.2E-05	2.E-02	5.E-07	2.E-02
Methyl tert-butyl ether	4.43E-04	3	0.00000026	1.6E-04	4.E-08	4.2E-04	1.E-04	4.E-08	1.E-04
1,1,2-Trichloroethane	ND	NA	0.000016	ND	ND	ND	ND	ND	ND
1,2,4-Trimethylbenzene	1.13E-03	0.007	NA	NA	NA	1.1E-03	2.E-01	NA	2.E-01
1,2-Dichloropropane	ND	0.004	0.00001	ND	ND	ND	ND	ND	ND
1,3-Dichlorobenzene	ND	0.2	NA	ND	ND	ND	ND	ND	ND
1,4-Dichlorobenzene	1.58E-02	0.8	0.000011	5.8E-03	6.E-05	1.5E-02	2.E-02	6.E-05	2.E-02
Bromodichloromethane	3.35E-05	NA	0.000037	1.2E-05	5.E-07	NA	NA	5.E-07	NA
Chlorobenzene	4.60E-05	0.05	NA	NA	NA	4.4E-05	9.E-04	NA	9.E-04
C5-C8 Aliphatic Hydrocarbons	6.10E-02	0.2	NA	NA	NA	5.8E-02	3.E-01	NA	3.E-01
C9-C12 Aliphatic Hydrocarbons	6.10E-02	0.2	NA	NA	NA	5.8E-02	3.E-01	NA	3.E-01
C9-C10 Aromatic Hydrocarbons	ND	0.05	NA	ND	ND	ND	ND	ND	ND
Total					1.E-04		2.E+00	1.E-04	2.E+00

NA - Not available
NC - Not calculated
ND - Not detected

Exposure and Risk Estimates Associated With Inhalation of Volatile Compounds in Air
UniFirst Corporation
15 Olympia Avenue, Woburn, MA
Storage User - Long Term - Warehouse
Indoor Air
Volatilization from Indoor Air
Warehouse
IA-04

Receptor:	Storage User - Long Term - Warehou
Medium of Origin:	Indoor Air
Exposure Medium:	Indoor Air
Exposure Area:	Warehouse
Depth:	NA
Duration:	NA

$$C_{air} = \frac{C_{source}}{AF}$$

$$EC_{inh} = \frac{C_{air} \times ET \times EF \times ED}{AT}$$

$$HI_{inh} = \frac{EC_{inh}}{RfC}$$

$$Risk = EC_{inh} \times URF \times CF$$

Parameter	Definition	Units	Value	Comment
ET	Indoor Air Exposure Time	hrs/d	3	
EF	Indoor Air Exposure Frequency	ds/y	250	
ED	Indoor Air Exposure Duration	y	25	
ATc	Indoor Air Averaging Time - Cancer	hrs	683280	
ATn	Indoor Air Averaging Time - Non-Cancer	hrs	219000	
CF	Conversion Factor	ug/mg	1000	

Compound	EPC Indoor Air (mg/m3)	RfC (mg/m3)	URF 1/(ug/m3)	ADE-c mg/m3	Riskinh	ADE-nc mg/m3	HIinh	Risk (Indoor Air)	HI (Indoor Air)
Chloroform	1.61E-04	0.098	0.000023	4.4E-06	1.E-07	1.4E-05	1.E-04	1.E-07	1.E-04
1,1-Dichloroethane	4.05E-05	NA	0.0000016	1.1E-06	2.E-09	NA	NA	2.E-09	NA
1,2-Dichloroethane	8.33E-04	2.4	0.000026	2.3E-05	6.E-07	7.1E-05	3.E-05	6.E-07	3.E-05
1,1-Dichloroethene	3.95E-05	0.2	NA	NA	NA	3.4E-06	2.E-05	NA	2.E-05
Tetrachloroethene	1.91E-02	0.27	0.0000059	5.2E-04	3.E-06	1.6E-03	6.E-03	3.E-06	6.E-03
Trichloroethene	1.61E-04	NA	0.000002	4.4E-06	9.E-09	NA	NA	9.E-09	NA
Vinyl chloride	ND	0.1	0.0000044	ND	ND	ND	ND	ND	ND
trans-1,2-Dichloroethene	3.95E-05	0.06	NA	NA	NA	3.4E-06	6.E-05	NA	6.E-05
cis-1,2-Dichloroethene	3.95E-05	0.035	NA	NA	NA	3.4E-06	1.E-04	NA	1.E-04
1,1,1-Trichloroethane	2.94E-04	5	NA	NA	NA	2.5E-05	5.E-06	NA	5.E-06
Methylene chloride	2.48E-03	1	0.00000047	6.8E-05	3.E-08	2.1E-04	2.E-04	3.E-08	2.E-04
Carbon tetrachloride	4.21E-04	0.1	0.000006	1.2E-05	7.E-08	3.6E-05	4.E-04	7.E-08	4.E-04
Xylenes	4.32E-03	0.1	NA	NA	NA	3.7E-04	4.E-03	NA	4.E-03
Toluene	1.96E-02	5	NA	NA	NA	1.7E-03	3.E-04	NA	3.E-04
1,2-Dibromoethane	ND	0.009	0.0006	ND	ND	ND	ND	ND	ND
Benzene	9.03E-04	0.03	0.0000078	2.5E-05	2.E-07	7.7E-05	3.E-03	2.E-07	3.E-03
Bromoform	ND	NA	0.0000011	ND	ND	ND	ND	ND	ND
Ethylbenzene	1.14E-03	1	0.0000025	3.1E-05	8.E-08	9.8E-05	1.E-04	8.E-08	1.E-04
IsoPropylbenzene	ND	0.4	NA	ND	ND	ND	ND	ND	ND
trans-1,3-Dichloropropene	ND	0.02	0.000004	ND	ND	ND	ND	ND	ND
Naphthalene	4.18E-03	0.003	0.000034	1.1E-04	4.E-06	3.6E-04	1.E-01	4.E-06	1.E-01
1,3-Butadiene	4.60E-05	0.002	0.00003	1.3E-06	4.E-08	3.9E-06	2.E-03	4.E-08	2.E-03
Methyl tert-butyl ether	4.39E-04	3	0.00000026	1.2E-05	3.E-09	3.8E-05	1.E-05	3.E-09	1.E-05
1,1,2-Trichloroethane	ND	NA	0.000016	ND	ND	ND	ND	ND	ND
1,2,4-Trimethylbenzene	1.60E-03	0.007	NA	NA	NA	1.4E-04	2.E-02	NA	2.E-02
1,2-Dichloropropane	ND	0.004	0.00001	ND	ND	ND	ND	ND	ND
1,3-Dichlorobenzene	ND	0.2	NA	ND	ND	ND	ND	ND	ND
1,4-Dichlorobenzene	1.16E-02	0.8	0.000011	3.2E-04	4.E-06	9.9E-04	1.E-03	4.E-06	1.E-03
Bromodichloromethane	3.35E-05	NA	0.000037	9.2E-07	3.E-08	NA	NA	3.E-08	NA
Chlorobenzene	4.60E-05	0.05	NA	NA	NA	3.9E-06	8.E-05	NA	8.E-05
C5-C8 Aliphatic Hydrocarbons	6.60E-02	0.2	NA	NA	NA	5.7E-03	3.E-02	NA	3.E-02
C9-C12 Aliphatic Hydrocarbons	7.30E-02	0.2	NA	NA	NA	6.3E-03	3.E-02	NA	3.E-02
C9-C10 Aromatic Hydrocarbons	ND	0.05	NA	ND	ND	ND	ND	ND	ND
Total					1.E-05		2.E-01	1.E-05	2.E-01

NA - Not available
NC - Not calculated
ND - Not detected

Exposure and Risk Estimates Associated With Inhalation of Volatile Compounds in Air
UniFirst Corporation
15 Olympia Avenue, Woburn, MA
Storage User - Short Term - Warehouse
Indoor Air
Volatilization from Indoor Air
Warehouse
IA-04

Receptor:	Storage User - Short Term - Warehou
Medium of Origin:	Indoor Air
Exposure Medium:	Indoor Air
Exposure Area:	Warehouse
Depth:	NA
Duration:	NA

$$C_{air} = \frac{C_{source}}{AF}$$

$$EC_{inh} = \frac{C_{air} \times ET \times EF \times ED}{AT}$$

$$HI_{inh} = \frac{EC_{inh}}{RfC}$$

$$Risk = EC_{inh} \times URF \times CF$$

Parameter	Definition	Units	Value	Comment
ET	Indoor Air Exposure Time	hrs/d	3	
EF	Indoor Air Exposure Frequency	ds/y	250	
ED	Indoor Air Exposure Duration	y	5	
ATc	Indoor Air Averaging Time - Cancer	hrs	683280	
ATn	Indoor Air Averaging Time - Non-Cancer	hrs	43800	
CF	Conversion Factor	ug/mg	1000	

Compound	EPC Indoor Air (mg/m3)	RfC (mg/m3)	URF 1/(ug/m3)	ADE-c mg/m3	Riskinh	ADE-nc mg/m3	HIinh	Risk (Indoor Air)	HI (Indoor Air)
Chloroform	1.61E-04	0.098	0.000023	8.8E-07	2.E-08	1.4E-05	1.E-04	2.E-08	1.E-04
1,1-Dichloroethane	4.05E-05	NA	0.0000016	2.2E-07	4.E-10	NA	NA	4.E-10	NA
1,2-Dichloroethane	8.33E-04	2.4	0.000026	4.6E-06	1.E-07	7.1E-05	3.E-05	1.E-07	3.E-05
1,1-Dichloroethene	3.95E-05	0.2	NA	NA	NA	3.4E-06	2.E-05	NA	2.E-05
Tetrachloroethene	1.91E-02	0.27	0.0000059	1.0E-04	6.E-07	1.6E-03	6.E-03	6.E-07	6.E-03
Trichloroethene	1.61E-04	NA	0.000002	8.8E-07	2.E-09	NA	NA	2.E-09	NA
Vinyl chloride	ND	0.1	0.0000044	ND	ND	ND	ND	ND	ND
trans-1,2-Dichloroethene	3.95E-05	0.06	NA	NA	NA	3.4E-06	6.E-05	NA	6.E-05
cis-1,2-Dichloroethene	3.95E-05	0.035	NA	NA	NA	3.4E-06	1.E-04	NA	1.E-04
1,1,1-Trichloroethane	2.94E-04	5	NA	NA	NA	2.5E-05	5.E-06	NA	5.E-06
Methylene chloride	2.48E-03	1	0.00000047	1.4E-05	6.E-09	2.1E-04	2.E-04	6.E-09	2.E-04
Carbon tetrachloride	4.21E-04	0.1	0.000006	2.3E-06	1.E-08	3.6E-05	4.E-04	1.E-08	4.E-04
Xylenes	4.32E-03	0.1	NA	NA	NA	3.7E-04	4.E-03	NA	4.E-03
Toluene	1.96E-02	5	NA	NA	NA	1.7E-03	3.E-04	NA	3.E-04
1,2-Dibromoethane	ND	0.009	0.0006	ND	ND	ND	ND	ND	ND
Benzene	9.03E-04	0.03	0.0000078	5.0E-06	4.E-08	7.7E-05	3.E-03	4.E-08	3.E-03
Bromoform	ND	NA	0.0000011	ND	ND	ND	ND	ND	ND
Ethylbenzene	1.14E-03	1	0.0000025	6.3E-06	2.E-08	9.8E-05	1.E-04	2.E-08	1.E-04
IsoPropylbenzene	ND	0.4	NA	ND	ND	ND	ND	ND	ND
trans-1,3-Dichloropropene	ND	0.02	0.000004	ND	ND	ND	ND	ND	ND
Naphthalene	4.18E-03	0.003	0.000034	2.3E-05	8.E-07	3.6E-04	1.E-01	8.E-07	1.E-01
1,3-Butadiene	4.60E-05	0.002	0.00003	2.5E-07	8.E-09	3.9E-06	2.E-03	8.E-09	2.E-03
Methyl tert-butyl ether	4.39E-04	3	0.00000026	2.4E-06	6.E-10	3.8E-05	1.E-05	6.E-10	1.E-05
1,1,2-Trichloroethane	ND	NA	0.000016	ND	ND	ND	ND	ND	ND
1,2,4-Trimethylbenzene	1.60E-03	0.007	NA	NA	NA	1.4E-04	2.E-02	NA	2.E-02
1,2-Dichloropropane	ND	0.004	0.00001	ND	ND	ND	ND	ND	ND
1,3-Dichlorobenzene	ND	0.2	NA	ND	ND	ND	ND	ND	ND
1,4-Dichlorobenzene	1.16E-02	0.8	0.000011	6.4E-05	7.E-07	9.9E-04	1.E-03	7.E-07	1.E-03
Bromodichloromethane	3.35E-05	NA	0.000037	1.8E-07	7.E-09	NA	NA	7.E-09	NA
Chlorobenzene	4.60E-05	0.05	NA	NA	NA	3.9E-06	8.E-05	NA	8.E-05
C5-C8 Aliphatic Hydrocarbons	6.60E-02	0.2	NA	NA	NA	5.7E-03	3.E-02	NA	3.E-02
C9-C12 Aliphatic Hydrocarbons	7.30E-02	0.2	NA	NA	NA	6.3E-03	3.E-02	NA	3.E-02
C9-C10 Aromatic Hydrocarbons	ND	0.05	NA	ND	ND	ND	ND	ND	ND
Total					2.E-06		2.E-01	2.E-06	2.E-01

NA - Not available
NC - Not calculated
ND - Not detected

Exposure and Risk Estimates Associated With Inhalation of Volatile Compounds in Air
UniFirst Corporation
15 Olympia Avenue, Woburn, MA
Commercial/Industrial Worker - Long Term
Indoor Air
Volatilization from Indoor Air
Warehouse
IA-04

Receptor:	Commercial/Industrial Worker - Long
Medium of Origin:	Indoor Air
Exposure Medium:	Indoor Air
Exposure Area:	Warehouse
Depth:	NA
Duration:	NA

$$C_{air} = \frac{C_{source}}{AF}$$

$$EC_{inh} = \frac{C_{air} \times ET \times EF \times ED}{AT}$$

$$HI_{inh} = \frac{EC_{inh}}{RfC}$$

$$Risk = EC_{inh} \times URF \times CF$$

Parameter	Definition	Units	Value	Comment
ET	Indoor Air Exposure Time	hrs/d	8	
EF	Indoor Air Exposure Frequency	ds/y	250	
ED	Indoor Air Exposure Duration	y	25	
ATc	Indoor Air Averaging Time - Cancer	hrs	683280	
ATn	Indoor Air Averaging Time - Non-Cancer	hrs	219000	
CF	Conversion Factor	ug/mg	1000	

Compound	EPC Indoor Air (mg/m3)	RfC (mg/m3)	URF 1/(ug/m3)	ADE-c mg/m3	Riskinh	ADE-nc mg/m3	HIinh	Risk (Indoor Air)	HI (Indoor Air)
Chloroform	1.61E-04	0.098	0.000023	1.2E-05	3.E-07	3.7E-05	4.E-04	3.E-07	4.E-04
1,1-Dichloroethane	4.05E-05	NA	0.0000016	3.0E-06	5.E-09	NA	NA	5.E-09	NA
1,2-Dichloroethane	8.33E-04	2.4	0.000026	6.1E-05	2.E-06	1.9E-04	8.E-05	2.E-06	8.E-05
1,1-Dichloroethene	3.95E-05	0.2	NA	NA	NA	9.0E-06	5.E-05	NA	5.E-05
Tetrachloroethene	1.91E-02	0.27	0.0000059	1.4E-03	8.E-06	4.4E-03	2.E-02	8.E-06	2.E-02
Trichloroethene	1.61E-04	NA	0.000002	1.2E-05	2.E-08	NA	NA	2.E-08	NA
Vinyl chloride	ND	0.1	0.0000044	ND	ND	ND	ND	ND	ND
trans-1,2-Dichloroethene	3.95E-05	0.06	NA	NA	NA	9.0E-06	2.E-04	NA	2.E-04
cis-1,2-Dichloroethene	3.95E-05	0.035	NA	NA	NA	9.0E-06	3.E-04	NA	3.E-04
1,1,1-Trichloroethane	2.94E-04	5	NA	NA	NA	6.7E-05	1.E-05	NA	1.E-05
Methylene chloride	2.48E-03	1	0.00000047	1.8E-04	9.E-08	5.7E-04	6.E-04	9.E-08	6.E-04
Carbon tetrachloride	4.21E-04	0.1	0.000006	3.1E-05	2.E-07	9.6E-05	1.E-03	2.E-07	1.E-03
Xylenes	4.32E-03	0.1	NA	NA	NA	9.9E-04	1.E-02	NA	1.E-02
Toluene	1.96E-02	5	NA	NA	NA	4.5E-03	9.E-04	NA	9.E-04
1,2-Dibromoethane	ND	0.009	0.0006	ND	ND	ND	ND	ND	ND
Benzene	9.03E-04	0.03	0.0000078	6.6E-05	5.E-07	2.1E-04	7.E-03	5.E-07	7.E-03
Bromoform	ND	NA	0.0000011	ND	ND	ND	ND	ND	ND
Ethylbenzene	1.14E-03	1	0.0000025	8.3E-05	2.E-07	2.6E-04	3.E-04	2.E-07	3.E-04
IsoPropylbenzene	ND	0.4	NA	ND	ND	ND	ND	ND	ND
trans-1,3-Dichloropropene	ND	0.02	0.000004	ND	ND	ND	ND	ND	ND
Naphthalene	4.18E-03	0.003	0.000034	3.1E-04	1.E-05	9.5E-04	3.E-01	1.E-05	3.E-01
1,3-Butadiene	4.60E-05	0.002	0.00003	3.4E-06	1.E-07	1.1E-05	5.E-03	1.E-07	5.E-03
Methyl tert-butyl ether	4.39E-04	3	0.00000026	3.2E-05	8.E-09	1.0E-04	3.E-05	8.E-09	3.E-05
1,1,2-Trichloroethane	ND	NA	0.000016	ND	ND	ND	ND	ND	ND
1,2,4-Trimethylbenzene	1.60E-03	0.007	NA	NA	NA	3.7E-04	5.E-02	NA	5.E-02
1,2-Dichloropropane	ND	0.004	0.00001	ND	ND	ND	ND	ND	ND
1,3-Dichlorobenzene	ND	0.2	NA	ND	ND	ND	ND	ND	ND
1,4-Dichlorobenzene	1.16E-02	0.8	0.000011	8.5E-04	9.E-06	2.6E-03	3.E-03	9.E-06	3.E-03
Bromodichloromethane	3.35E-05	NA	0.000037	2.5E-06	9.E-08	NA	NA	9.E-08	NA
Chlorobenzene	4.60E-05	0.05	NA	NA	NA	1.1E-05	2.E-04	NA	2.E-04
C5-C8 Aliphatic Hydrocarbons	6.60E-02	0.2	NA	NA	NA	1.5E-02	8.E-02	NA	8.E-02
C9-C12 Aliphatic Hydrocarbons	7.30E-02	0.2	NA	NA	NA	1.7E-02	8.E-02	NA	8.E-02
C9-C10 Aromatic Hydrocarbons	ND	0.05	NA	ND	ND	ND	ND	ND	ND
Total					3.E-05		6.E-01	3.E-05	6.E-01

NA - Not available
NC - Not calculated
ND - Not detected

Exposure and Risk Estimates Associated With Inhalation of Volatile Compounds in Air
UniFirst Corporation
15 Olympia Avenue, Woburn, MA
Commercial/Industrial Worker - Short Term
Indoor Air
Volatilization from Indoor Air
Warehouse
IA-04

Receptor:	Commercial/Industrial Worker - Short
Medium of Origin:	Indoor Air
Exposure Medium:	Indoor Air
Exposure Area:	Warehouse
Depth:	NA
Duration:	NA

$$C_{air} = \frac{C_{source}}{AF}$$

$$EC_{inh} = \frac{C_{air} \times ET \times EF \times ED}{AT}$$

$$HI_{inh} = \frac{EC_{inh}}{RfC}$$

$$Risk = EC_{inh} \times URF \times CF$$

Parameter	Definition	Units	Value	Comment
ET	Indoor Air Exposure Time	hrs/d	8	
EF	Indoor Air Exposure Frequency	ds/y	250	
ED	Indoor Air Exposure Duration	y	5	
ATc	Indoor Air Averaging Time - Cancer	hrs	683280	
ATn	Indoor Air Averaging Time - Non-Cancer	hrs	43800	
CF	Conversion Factor	ug/mg	1000	

Compound	EPC Indoor Air (mg/m3)	RfC (mg/m3)	URF 1/(ug/m3)	ADE-c mg/m3	Riskinh	ADE-nc mg/m3	HIinh	Risk (Indoor Air)	HI (Indoor Air)
Chloroform	1.61E-04	0.098	0.000023	2.4E-06	5.E-08	3.7E-05	4.E-04	5.E-08	4.E-04
1,1-Dichloroethane	4.05E-05	NA	0.0000016	5.9E-07	9.E-10	NA	NA	9.E-10	NA
1,2-Dichloroethane	8.33E-04	2.4	0.000026	1.2E-05	3.E-07	1.9E-04	8.E-05	3.E-07	8.E-05
1,1-Dichloroethene	3.95E-05	0.2	NA	NA	NA	9.0E-06	5.E-05	NA	5.E-05
Tetrachloroethene	1.91E-02	0.27	0.0000059	2.8E-04	2.E-06	4.4E-03	2.E-02	2.E-06	2.E-02
Trichloroethene	1.61E-04	NA	0.000002	2.4E-06	5.E-09	NA	NA	5.E-09	NA
Vinyl chloride	ND	0.1	0.0000044	ND	ND	ND	ND	ND	ND
trans-1,2-Dichloroethene	3.95E-05	0.06	NA	NA	NA	9.0E-06	2.E-04	NA	2.E-04
cis-1,2-Dichloroethene	3.95E-05	0.035	NA	NA	NA	9.0E-06	3.E-04	NA	3.E-04
1,1,1-Trichloroethane	2.94E-04	5	NA	NA	NA	6.7E-05	1.E-05	NA	1.E-05
Methylene chloride	2.48E-03	1	0.00000047	3.6E-05	2.E-08	5.7E-04	6.E-04	2.E-08	6.E-04
Carbon tetrachloride	4.21E-04	0.1	0.000006	6.2E-06	4.E-08	9.6E-05	1.E-03	4.E-08	1.E-03
Xylenes	4.32E-03	0.1	NA	NA	NA	9.9E-04	1.E-02	NA	1.E-02
Toluene	1.96E-02	5	NA	NA	NA	4.5E-03	9.E-04	NA	9.E-04
1,2-Dibromoethane	ND	0.009	0.0006	ND	ND	ND	ND	ND	ND
Benzene	9.03E-04	0.03	0.0000078	1.3E-05	1.E-07	2.1E-04	7.E-03	1.E-07	7.E-03
Bromoform	ND	NA	0.0000011	ND	ND	ND	ND	ND	ND
Ethylbenzene	1.14E-03	1	0.0000025	1.7E-05	4.E-08	2.6E-04	3.E-04	4.E-08	3.E-04
IsoPropylbenzene	ND	0.4	NA	ND	ND	ND	ND	ND	ND
trans-1,3-Dichloropropene	ND	0.02	0.000004	ND	ND	ND	ND	ND	ND
Naphthalene	4.18E-03	0.003	0.000034	6.1E-05	2.E-06	9.5E-04	3.E-01	2.E-06	3.E-01
1,3-Butadiene	4.60E-05	0.002	0.00003	6.7E-07	2.E-08	1.1E-05	5.E-03	2.E-08	5.E-03
Methyl tert-butyl ether	4.39E-04	3	0.00000026	6.4E-06	2.E-09	1.0E-04	3.E-05	2.E-09	3.E-05
1,1,2-Trichloroethane	ND	NA	0.000016	ND	ND	ND	ND	ND	ND
1,2,4-Trimethylbenzene	1.60E-03	0.007	NA	NA	NA	3.7E-04	5.E-02	NA	5.E-02
1,2-Dichloropropane	ND	0.004	0.00001	ND	ND	ND	ND	ND	ND
1,3-Dichlorobenzene	ND	0.2	NA	ND	ND	ND	ND	ND	ND
1,4-Dichlorobenzene	1.16E-02	0.8	0.000011	1.7E-04	2.E-06	2.6E-03	3.E-03	2.E-06	3.E-03
Bromodichloromethane	3.35E-05	NA	0.000037	4.9E-07	2.E-08	NA	NA	2.E-08	NA
Chlorobenzene	4.60E-05	0.05	NA	NA	NA	1.1E-05	2.E-04	NA	2.E-04
C5-C8 Aliphatic Hydrocarbons	6.60E-02	0.2	NA	NA	NA	1.5E-02	8.E-02	NA	8.E-02
C9-C12 Aliphatic Hydrocarbons	7.30E-02	0.2	NA	NA	NA	1.7E-02	8.E-02	NA	8.E-02
C9-C10 Aromatic Hydrocarbons	ND	0.05	NA	ND	ND	ND	ND	ND	ND
Total					6.E-06		6.E-01	6.E-06	6.E-01

NA - Not available
NC - Not calculated
ND - Not detected

Exposure and Risk Estimates Associated With Inhalation of Volatile Compounds in Air
UniFirst Corporation
15 Olympia Avenue, Woburn, MA
Resident - Long Term
Indoor Air
Volatilization from Indoor Air
Warehouse
IA-04

Receptor:	Resident - Long Term
Medium of Origin:	Indoor Air
Exposure Medium:	Indoor Air
Exposure Area:	Warehouse
Depth:	NA
Duration:	NA

$$C_{air} = \frac{C_{source}}{AF}$$

$$EC_{inh} = \frac{C_{air} \times ET \times EF \times ED}{AT}$$

$$HI_{inh} = \frac{EC_{inh}}{RfC}$$

$$Risk = EC_{inh} \times URF \times CF$$

Parameter	Definition	Units	Value	Comment
ET	Indoor Air Exposure Time	hrs/d	24	
EF	Indoor Air Exposure Frequency	ds/y	350	
ED	Indoor Air Exposure Duration	y	30	
ATc	Indoor Air Averaging Time - Cancer	hrs	683280	
ATn	Indoor Air Averaging Time - Non-Cancer	hrs	262800	
CF	Conversion Factor	ug/mg	1000	

Compound	EPC Indoor Air (mg/m3)	RfC (mg/m3)	URF 1/(ug/m3)	ADE-c mg/m3	Riskinh	ADE-nc mg/m3	HIinh	Risk (Indoor Air)	HI (Indoor Air)
Chloroform	1.61E-04	0.098	0.000023	5.9E-05	1.E-06	1.5E-04	2.E-03	1.E-06	2.E-03
1,1-Dichloroethane	4.05E-05	NA	0.0000016	1.5E-05	2.E-08	NA	NA	2.E-08	NA
1,2-Dichloroethane	8.33E-04	2.4	0.000026	3.1E-04	8.E-06	8.0E-04	3.E-04	8.E-06	3.E-04
1,1-Dichloroethene	3.95E-05	0.2	NA	NA	NA	3.8E-05	2.E-04	NA	2.E-04
Tetrachloroethene	1.91E-02	0.27	0.0000059	7.0E-03	4.E-05	1.8E-02	7.E-02	4.E-05	7.E-02
Trichloroethene	1.61E-04	NA	0.000002	5.9E-05	1.E-07	NA	NA	1.E-07	NA
Vinyl chloride	ND	0.1	0.0000044	ND	ND	ND	ND	ND	ND
trans-1,2-Dichloroethene	3.95E-05	0.06	NA	NA	NA	3.8E-05	6.E-04	NA	6.E-04
cis-1,2-Dichloroethene	3.95E-05	0.035	NA	NA	NA	3.8E-05	1.E-03	NA	1.E-03
1,1,1-Trichloroethane	2.94E-04	5	NA	NA	NA	2.8E-04	6.E-05	NA	6.E-05
Methylene chloride	2.48E-03	1	0.00000047	9.1E-04	4.E-07	2.4E-03	2.E-03	4.E-07	2.E-03
Carbon tetrachloride	4.21E-04	0.1	0.000006	1.6E-04	9.E-07	4.0E-04	4.E-03	9.E-07	4.E-03
Xylenes	4.32E-03	0.1	NA	NA	NA	4.1E-03	4.E-02	NA	4.E-02
Toluene	1.96E-02	5	NA	NA	NA	1.9E-02	4.E-03	NA	4.E-03
1,2-Dibromoethane	ND	0.009	0.0006	ND	ND	ND	ND	ND	ND
Benzene	9.03E-04	0.03	0.0000078	3.3E-04	3.E-06	8.7E-04	3.E-02	3.E-06	3.E-02
Bromoform	ND	NA	0.0000011	ND	ND	ND	ND	ND	ND
Ethylbenzene	1.14E-03	1	0.0000025	4.2E-04	1.E-06	1.1E-03	1.E-03	1.E-06	1.E-03
IsoPropylbenzene	ND	0.4	NA	ND	ND	ND	ND	ND	ND
trans-1,3-Dichloropropene	ND	0.02	0.000004	ND	ND	ND	ND	ND	ND
Naphthalene	4.18E-03	0.003	0.000034	1.5E-03	5.E-05	4.0E-03	1.E+00	5.E-05	1.E+00
1,3-Butadiene	4.60E-05	0.002	0.00003	1.7E-05	5.E-07	4.4E-05	2.E-02	5.E-07	2.E-02
Methyl tert-butyl ether	4.39E-04	3	0.00000026	1.6E-04	4.E-08	4.2E-04	1.E-04	4.E-08	1.E-04
1,1,2-Trichloroethane	ND	NA	0.000016	ND	ND	ND	ND	ND	ND
1,2,4-Trimethylbenzene	1.60E-03	0.007	NA	NA	NA	1.5E-03	2.E-01	NA	2.E-01
1,2-Dichloropropane	ND	0.004	0.00001	ND	ND	ND	ND	ND	ND
1,3-Dichlorobenzene	ND	0.2	NA	ND	ND	ND	ND	ND	ND
1,4-Dichlorobenzene	1.16E-02	0.8	0.000011	4.3E-03	5.E-05	1.1E-02	1.E-02	5.E-05	1.E-02
Bromodichloromethane	3.35E-05	NA	0.000037	1.2E-05	5.E-07	NA	NA	5.E-07	NA
Chlorobenzene	4.60E-05	0.05	NA	NA	NA	4.4E-05	9.E-04	NA	9.E-04
C5-C8 Aliphatic Hydrocarbons	6.60E-02	0.2	NA	NA	NA	6.3E-02	3.E-01	NA	3.E-01
C9-C12 Aliphatic Hydrocarbons	7.30E-02	0.2	NA	NA	NA	7.0E-02	4.E-01	NA	4.E-01
C9-C10 Aromatic Hydrocarbons	ND	0.05	NA	ND	ND	ND	ND	ND	ND
Total					2.E-04		2.E+00	2.E-04	2.E+00

NA - Not available
NC - Not calculated
ND - Not detected

Exposure and Risk Estimates Associated With Inhalation of Volatile Compounds in Air
UniFirst Corporation
15 Olympia Avenue, Woburn, MA
Storage User - Long Term - Warehouse
Indoor Air
Volatilization from Indoor Air
Warehouse
IA-05

Receptor:	Storage User - Long Term - Warehou
Medium of Origin:	Indoor Air
Exposure Medium:	Indoor Air
Exposure Area:	Warehouse
Depth:	NA
Duration:	NA

$$C_{air} = \frac{C_{source}}{AF}$$

$$EC_{inh} = \frac{C_{air} \times ET \times EF \times ED}{AT}$$

$$HI_{inh} = \frac{EC_{inh}}{RfC}$$

$$Risk = EC_{inh} \times URF \times CF$$

Parameter	Definition	Units	Value	Comment
ET	Indoor Air Exposure Time	hrs/d	3	
EF	Indoor Air Exposure Frequency	ds/y	250	
ED	Indoor Air Exposure Duration	y	25	
ATc	Indoor Air Averaging Time - Cancer	hrs	683280	
ATn	Indoor Air Averaging Time - Non-Cancer	hrs	219000	
CF	Conversion Factor	ug/mg	1000	

Compound	EPC Indoor Air (mg/m3)	RfC (mg/m3)	URF 1/(ug/m3)	ADE-c mg/m3	Riskinh	ADE-nc mg/m3	HIinh	Risk (Indoor Air)	HI (Indoor Air)
Chloroform	1.51E-04	0.098	0.000023	4.1E-06	1.E-07	1.3E-05	1.E-04	1.E-07	1.E-04
1,1-Dichloroethane	4.05E-05	NA	0.0000016	1.1E-06	2.E-09	NA	NA	2.E-09	NA
1,2-Dichloroethane	3.56E-04	2.4	0.000026	9.8E-06	3.E-07	3.0E-05	1.E-05	3.E-07	1.E-05
1,1-Dichloroethene	3.95E-05	0.2	NA	NA	NA	3.4E-06	2.E-05	NA	2.E-05
Tetrachloroethene	9.83E-03	0.27	0.0000059	2.7E-04	2.E-06	8.4E-04	3.E-03	2.E-06	3.E-03
Trichloroethene	1.18E-04	NA	0.000002	3.2E-06	6.E-09	NA	NA	6.E-09	NA
Vinyl chloride	ND	0.1	0.0000044	ND	ND	ND	ND	ND	ND
trans-1,2-Dichloroethene	3.95E-05	0.06	NA	NA	NA	3.4E-06	6.E-05	NA	6.E-05
cis-1,2-Dichloroethene	3.95E-05	0.035	NA	NA	NA	3.4E-06	1.E-04	NA	1.E-04
1,1,1-Trichloroethane	2.18E-04	5	NA	NA	NA	1.9E-05	4.E-06	NA	4.E-06
Methylene chloride	8.70E-04	1	0.00000047	2.4E-05	1.E-08	7.4E-05	7.E-05	1.E-08	7.E-05
Carbon tetrachloride	4.02E-04	0.1	0.000006	1.1E-05	7.E-08	3.4E-05	3.E-04	7.E-08	3.E-04
Xylenes	4.02E-03	0.1	NA	NA	NA	3.4E-04	3.E-03	NA	3.E-03
Toluene	7.56E-03	5	NA	NA	NA	6.5E-04	1.E-04	NA	1.E-04
1,2-Dibromoethane	ND	0.009	0.0006	ND	ND	ND	ND	ND	ND
Benzene	1.14E-03	0.03	0.0000078	3.1E-05	2.E-07	9.8E-05	3.E-03	2.E-07	3.E-03
Bromoform	ND	NA	0.0000011	ND	ND	ND	ND	ND	ND
Ethylbenzene	1.01E-03	1	0.0000025	2.8E-05	7.E-08	8.6E-05	9.E-05	7.E-08	9.E-05
IsoPropylbenzene	ND	0.4	NA	ND	ND	ND	ND	ND	ND
trans-1,3-Dichloropropene	ND	0.02	0.000004	ND	ND	ND	ND	ND	ND
Naphthalene	1.17E-03	0.003	0.000034	3.2E-05	1.E-06	1.0E-04	3.E-02	1.E-06	3.E-02
1,3-Butadiene	9.70E-05	0.002	0.00003	2.7E-06	8.E-08	8.3E-06	4.E-03	8.E-08	4.E-03
Methyl tert-butyl ether	1.66E-04	3	0.00000026	4.6E-06	1.E-09	1.4E-05	5.E-06	1.E-09	5.E-06
1,1,2-Trichloroethane	ND	NA	0.000016	ND	ND	ND	ND	ND	ND
1,2,4-Trimethylbenzene	1.02E-03	0.007	NA	NA	NA	8.7E-05	1.E-02	NA	1.E-02
1,2-Dichloropropane	ND	0.004	0.00001	ND	ND	ND	ND	ND	ND
1,3-Dichlorobenzene	ND	0.2	NA	ND	ND	ND	ND	ND	ND
1,4-Dichlorobenzene	1.43E-03	0.8	0.000011	3.9E-05	4.E-07	1.2E-04	2.E-04	4.E-07	2.E-04
Bromodichloromethane	3.35E-05	NA	0.000037	9.2E-07	3.E-08	NA	NA	3.E-08	NA
Chlorobenzene	4.60E-05	0.05	NA	NA	NA	3.9E-06	8.E-05	NA	8.E-05
C5-C8 Aliphatic Hydrocarbons	4.40E-02	0.2	NA	NA	NA	3.8E-03	2.E-02	NA	2.E-02
C9-C12 Aliphatic Hydrocarbons	2.80E-02	0.2	NA	NA	NA	2.4E-03	1.E-02	NA	1.E-02
C9-C10 Aromatic Hydrocarbons	ND	0.05	NA	ND	ND	ND	ND	ND	ND
Total					4.E-06		9.E-02	4.E-06	9.E-02

NA - Not available
NC - Not calculated
ND - Not detected

Exposure and Risk Estimates Associated With Inhalation of Volatile Compounds in Air
UniFirst Corporation
15 Olympia Avenue, Woburn, MA
Storage User - Short Term - Warehouse
Indoor Air
Volatilization from Indoor Air
Warehouse
IA-05

Receptor:	Storage User - Short Term - Warehou
Medium of Origin:	Indoor Air
Exposure Medium:	Indoor Air
Exposure Area:	Warehouse
Depth:	NA
Duration:	NA

$$C_{air} = \frac{C_{source}}{AF}$$

$$EC_{inh} = \frac{C_{air} \times ET \times EF \times ED}{AT}$$

$$HI_{inh} = \frac{EC_{inh}}{RfC}$$

$$Risk = EC_{inh} \times URF \times CF$$

Parameter	Definition	Units	Value	Comment
ET	Indoor Air Exposure Time	hrs/d	3	
EF	Indoor Air Exposure Frequency	ds/y	250	
ED	Indoor Air Exposure Duration	y	5	
ATc	Indoor Air Averaging Time - Cancer	hrs	683280	
ATn	Indoor Air Averaging Time - Non-Cancer	hrs	43800	
CF	Conversion Factor	ug/mg	1000	

Compound	EPC Indoor Air (mg/m3)	RfC (mg/m3)	URF 1/(ug/m3)	ADE-c mg/m3	Riskinh	ADE-nc mg/m3	HIinh	Risk (Indoor Air)	HI (Indoor Air)
Chloroform	1.51E-04	0.098	0.000023	8.3E-07	2.E-08	1.3E-05	1.E-04	2.E-08	1.E-04
1,1-Dichloroethane	4.05E-05	NA	0.0000016	2.2E-07	4.E-10	NA	NA	4.E-10	NA
1,2-Dichloroethane	3.56E-04	2.4	0.000026	2.0E-06	5.E-08	3.0E-05	1.E-05	5.E-08	1.E-05
1,1-Dichloroethene	3.95E-05	0.2	NA	NA	NA	3.4E-06	2.E-05	NA	2.E-05
Tetrachloroethene	9.83E-03	0.27	0.0000059	5.4E-05	3.E-07	8.4E-04	3.E-03	3.E-07	3.E-03
Trichloroethene	1.18E-04	NA	0.000002	6.5E-07	1.E-09	NA	NA	1.E-09	NA
Vinyl chloride	ND	0.1	0.0000044	ND	ND	ND	ND	ND	ND
trans-1,2-Dichloroethene	3.95E-05	0.06	NA	NA	NA	3.4E-06	6.E-05	NA	6.E-05
cis-1,2-Dichloroethene	3.95E-05	0.035	NA	NA	NA	3.4E-06	1.E-04	NA	1.E-04
1,1,1-Trichloroethane	2.18E-04	5	NA	NA	NA	1.9E-05	4.E-06	NA	4.E-06
Methylene chloride	8.70E-04	1	0.00000047	4.8E-06	2.E-09	7.4E-05	7.E-05	2.E-09	7.E-05
Carbon tetrachloride	4.02E-04	0.1	0.000006	2.2E-06	1.E-08	3.4E-05	3.E-04	1.E-08	3.E-04
Xylenes	4.02E-03	0.1	NA	NA	NA	3.4E-04	3.E-03	NA	3.E-03
Toluene	7.56E-03	5	NA	NA	NA	6.5E-04	1.E-04	NA	1.E-04
1,2-Dibromoethane	ND	0.009	0.0006	ND	ND	ND	ND	ND	ND
Benzene	1.14E-03	0.03	0.0000078	6.3E-06	5.E-08	9.8E-05	3.E-03	5.E-08	3.E-03
Bromoform	ND	NA	0.0000011	ND	ND	ND	ND	ND	ND
Ethylbenzene	1.01E-03	1	0.0000025	5.5E-06	1.E-08	8.6E-05	9.E-05	1.E-08	9.E-05
IsoPropylbenzene	ND	0.4	NA	ND	ND	ND	ND	ND	ND
trans-1,3-Dichloropropene	ND	0.02	0.000004	ND	ND	ND	ND	ND	ND
Naphthalene	1.17E-03	0.003	0.000034	6.4E-06	2.E-07	1.0E-04	3.E-02	2.E-07	3.E-02
1,3-Butadiene	9.70E-05	0.002	0.00003	5.3E-07	2.E-08	8.3E-06	4.E-03	2.E-08	4.E-03
Methyl tert-butyl ether	1.66E-04	3	0.00000026	9.1E-07	2.E-10	1.4E-05	5.E-06	2.E-10	5.E-06
1,1,2-Trichloroethane	ND	NA	0.000016	ND	ND	ND	ND	ND	ND
1,2,4-Trimethylbenzene	1.02E-03	0.007	NA	NA	NA	8.7E-05	1.E-02	NA	1.E-02
1,2-Dichloropropane	ND	0.004	0.00001	ND	ND	ND	ND	ND	ND
1,3-Dichlorobenzene	ND	0.2	NA	ND	ND	ND	ND	ND	ND
1,4-Dichlorobenzene	1.43E-03	0.8	0.000011	7.8E-06	9.E-08	1.2E-04	2.E-04	9.E-08	2.E-04
Bromodichloromethane	3.35E-05	NA	0.000037	1.8E-07	7.E-09	NA	NA	7.E-09	NA
Chlorobenzene	4.60E-05	0.05	NA	NA	NA	3.9E-06	8.E-05	NA	8.E-05
C5-C8 Aliphatic Hydrocarbons	4.40E-02	0.2	NA	NA	NA	3.8E-03	2.E-02	NA	2.E-02
C9-C12 Aliphatic Hydrocarbons	2.80E-02	0.2	NA	NA	NA	2.4E-03	1.E-02	NA	1.E-02
C9-C10 Aromatic Hydrocarbons	ND	0.05	NA	ND	ND	ND	ND	ND	ND
Total					8.E-07		9.E-02	8.E-07	9.E-02

NA - Not available
NC - Not calculated
ND - Not detected

Exposure and Risk Estimates Associated With Inhalation of Volatile Compounds in Air
UniFirst Corporation
15 Olympia Avenue, Woburn, MA
Commercial/Industrial Worker - Long Term
Indoor Air
Volatilization from Indoor Air
Warehouse
IA-05

Receptor:	Commercial/Industrial Worker - Long
Medium of Origin:	Indoor Air
Exposure Medium:	Indoor Air
Exposure Area:	Warehouse
Depth:	NA
Duration:	NA

$$C_{air} = \frac{C_{source}}{AF}$$

$$EC_{inh} = \frac{C_{air} \times ET \times EF \times ED}{AT}$$

$$HI_{inh} = \frac{EC_{inh}}{RfC}$$

$$Risk = EC_{inh} \times URF \times CF$$

Parameter	Definition	Units	Value	Comment
ET	Indoor Air Exposure Time	hrs/d	8	
EF	Indoor Air Exposure Frequency	ds/y	250	
ED	Indoor Air Exposure Duration	y	25	
ATc	Indoor Air Averaging Time - Cancer	hrs	683280	
ATn	Indoor Air Averaging Time - Non-Cancer	hrs	219000	
CF	Conversion Factor	ug/mg	1000	

Compound	EPC Indoor Air (mg/m3)	RfC (mg/m3)	URF 1/(ug/m3)	ADE-c mg/m3	Riskinh	ADE-nc mg/m3	HIinh	Risk (Indoor Air)	HI (Indoor Air)
Chloroform	1.51E-04	0.098	0.000023	1.1E-05	3.E-07	3.4E-05	4.E-04	3.E-07	4.E-04
1,1-Dichloroethane	4.05E-05	NA	0.0000016	3.0E-06	5.E-09	NA	NA	5.E-09	NA
1,2-Dichloroethane	3.56E-04	2.4	0.000026	2.6E-05	7.E-07	8.1E-05	3.E-05	7.E-07	3.E-05
1,1-Dichloroethene	3.95E-05	0.2	NA	NA	NA	9.0E-06	5.E-05	NA	5.E-05
Tetrachloroethene	9.83E-03	0.27	0.0000059	7.2E-04	4.E-06	2.2E-03	8.E-03	4.E-06	8.E-03
Trichloroethene	1.18E-04	NA	0.000002	8.6E-06	2.E-08	NA	NA	2.E-08	NA
Vinyl chloride	ND	0.1	0.0000044	ND	ND	ND	ND	ND	ND
trans-1,2-Dichloroethene	3.95E-05	0.06	NA	NA	NA	9.0E-06	2.E-04	NA	2.E-04
cis-1,2-Dichloroethene	3.95E-05	0.035	NA	NA	NA	9.0E-06	3.E-04	NA	3.E-04
1,1,1-Trichloroethane	2.18E-04	5	NA	NA	NA	5.0E-05	1.E-05	NA	1.E-05
Methylene chloride	8.70E-04	1	0.00000047	6.4E-05	3.E-08	2.0E-04	2.E-04	3.E-08	2.E-04
Carbon tetrachloride	4.02E-04	0.1	0.000006	2.9E-05	2.E-07	9.2E-05	9.E-04	2.E-07	9.E-04
Xylenes	4.02E-03	0.1	NA	NA	NA	9.2E-04	9.E-03	NA	9.E-03
Toluene	7.56E-03	5	NA	NA	NA	1.7E-03	3.E-04	NA	3.E-04
1,2-Dibromoethane	ND	0.009	0.0006	ND	ND	ND	ND	ND	ND
Benzene	1.14E-03	0.03	0.0000078	8.3E-05	7.E-07	2.6E-04	9.E-03	7.E-07	9.E-03
Bromoform	ND	NA	0.0000011	ND	ND	ND	ND	ND	ND
Ethylbenzene	1.01E-03	1	0.0000025	7.4E-05	2.E-07	2.3E-04	2.E-04	2.E-07	2.E-04
IsoPropylbenzene	ND	0.4	NA	ND	ND	ND	ND	ND	ND
trans-1,3-Dichloropropene	ND	0.02	0.000004	ND	ND	ND	ND	ND	ND
Naphthalene	1.17E-03	0.003	0.000034	8.6E-05	3.E-06	2.7E-04	9.E-02	3.E-06	9.E-02
1,3-Butadiene	9.70E-05	0.002	0.00003	7.1E-06	2.E-07	2.2E-05	1.E-02	2.E-07	1.E-02
Methyl tert-butyl ether	1.66E-04	3	0.00000026	1.2E-05	3.E-09	3.8E-05	1.E-05	3.E-09	1.E-05
1,1,2-Trichloroethane	ND	NA	0.000016	ND	ND	ND	ND	ND	ND
1,2,4-Trimethylbenzene	1.02E-03	0.007	NA	NA	NA	2.3E-04	3.E-02	NA	3.E-02
1,2-Dichloropropane	ND	0.004	0.00001	ND	ND	ND	ND	ND	ND
1,3-Dichlorobenzene	ND	0.2	NA	ND	ND	ND	ND	ND	ND
1,4-Dichlorobenzene	1.43E-03	0.8	0.000011	1.0E-04	1.E-06	3.3E-04	4.E-04	1.E-06	4.E-04
Bromodichloromethane	3.35E-05	NA	0.000037	2.5E-06	9.E-08	NA	NA	9.E-08	NA
Chlorobenzene	4.60E-05	0.05	NA	NA	NA	1.1E-05	2.E-04	NA	2.E-04
C5-C8 Aliphatic Hydrocarbons	4.40E-02	0.2	NA	NA	NA	1.0E-02	5.E-02	NA	5.E-02
C9-C12 Aliphatic Hydrocarbons	2.80E-02	0.2	NA	NA	NA	6.4E-03	3.E-02	NA	3.E-02
C9-C10 Aromatic Hydrocarbons	ND	0.05	NA	ND	ND	ND	ND	ND	ND
Total					1.E-05		2.E-01	1.E-05	2.E-01

NA - Not available
NC - Not calculated
ND - Not detected

Exposure and Risk Estimates Associated With Inhalation of Volatile Compounds in Air
UniFirst Corporation
15 Olympia Avenue, Woburn, MA
Commercial/Industrial Worker - Short Term
Indoor Air
Volatilization from Indoor Air
Warehouse
IA-05

Receptor:	Commercial/Industrial Worker - Short
Medium of Origin:	Indoor Air
Exposure Medium:	Indoor Air
Exposure Area:	Warehouse
Depth:	NA
Duration:	NA

$$C_{air} = \frac{C_{source}}{AF}$$

$$EC_{inh} = \frac{C_{air} \times ET \times EF \times ED}{AT}$$

$$HI_{inh} = \frac{EC_{inh}}{RfC}$$

$$Risk = EC_{inh} \times URF \times CF$$

Parameter	Definition	Units	Value	Comment
ET	Indoor Air Exposure Time	hrs/d	8	
EF	Indoor Air Exposure Frequency	ds/y	250	
ED	Indoor Air Exposure Duration	y	5	
ATc	Indoor Air Averaging Time - Cancer	hrs	683280	
ATn	Indoor Air Averaging Time - Non-Cancer	hrs	43800	
CF	Conversion Factor	ug/mg	1000	

Compound	EPC Indoor Air (mg/m3)	RfC (mg/m3)	URF 1/(ug/m3)	ADE-c mg/m3	Riskinh	ADE-nc mg/m3	HIinh	Risk (Indoor Air)	HI (Indoor Air)
Chloroform	1.51E-04	0.098	0.000023	2.2E-06	5.E-08	3.4E-05	4.E-04	5.E-08	4.E-04
1,1-Dichloroethane	4.05E-05	NA	0.0000016	5.9E-07	9.E-10	NA	NA	9.E-10	NA
1,2-Dichloroethane	3.56E-04	2.4	0.000026	5.2E-06	1.E-07	8.1E-05	3.E-05	1.E-07	3.E-05
1,1-Dichloroethene	3.95E-05	0.2	NA	NA	NA	9.0E-06	5.E-05	NA	5.E-05
Tetrachloroethene	9.83E-03	0.27	0.0000059	1.4E-04	8.E-07	2.2E-03	8.E-03	8.E-07	8.E-03
Trichloroethene	1.18E-04	NA	0.000002	1.7E-06	3.E-09	NA	NA	3.E-09	NA
Vinyl chloride	ND	0.1	0.0000044	ND	ND	ND	ND	ND	ND
trans-1,2-Dichloroethene	3.95E-05	0.06	NA	NA	NA	9.0E-06	2.E-04	NA	2.E-04
cis-1,2-Dichloroethene	3.95E-05	0.035	NA	NA	NA	9.0E-06	3.E-04	NA	3.E-04
1,1,1-Trichloroethane	2.18E-04	5	NA	NA	NA	5.0E-05	1.E-05	NA	1.E-05
Methylene chloride	8.70E-04	1	0.00000047	1.3E-05	6.E-09	2.0E-04	2.E-04	6.E-09	2.E-04
Carbon tetrachloride	4.02E-04	0.1	0.000006	5.9E-06	4.E-08	9.2E-05	9.E-04	4.E-08	9.E-04
Xylenes	4.02E-03	0.1	NA	NA	NA	9.2E-04	9.E-03	NA	9.E-03
Toluene	7.56E-03	5	NA	NA	NA	1.7E-03	3.E-04	NA	3.E-04
1,2-Dibromoethane	ND	0.009	0.0006	ND	ND	ND	ND	ND	ND
Benzene	1.14E-03	0.03	0.0000078	1.7E-05	1.E-07	2.6E-04	9.E-03	1.E-07	9.E-03
Bromoform	ND	NA	0.0000011	ND	ND	ND	ND	ND	ND
Ethylbenzene	1.01E-03	1	0.0000025	1.5E-05	4.E-08	2.3E-04	2.E-04	4.E-08	2.E-04
IsoPropylbenzene	ND	0.4	NA	ND	ND	ND	ND	ND	ND
trans-1,3-Dichloropropene	ND	0.02	0.000004	ND	ND	ND	ND	ND	ND
Naphthalene	1.17E-03	0.003	0.000034	1.7E-05	6.E-07	2.7E-04	9.E-02	6.E-07	9.E-02
1,3-Butadiene	9.70E-05	0.002	0.00003	1.4E-06	4.E-08	2.2E-05	1.E-02	4.E-08	1.E-02
Methyl tert-butyl ether	1.66E-04	3	0.00000026	2.4E-06	6.E-10	3.8E-05	1.E-05	6.E-10	1.E-05
1,1,2-Trichloroethane	ND	NA	0.000016	ND	ND	ND	ND	ND	ND
1,2,4-Trimethylbenzene	1.02E-03	0.007	NA	NA	NA	2.3E-04	3.E-02	NA	3.E-02
1,2-Dichloropropane	ND	0.004	0.00001	ND	ND	ND	ND	ND	ND
1,3-Dichlorobenzene	ND	0.2	NA	ND	ND	ND	ND	ND	ND
1,4-Dichlorobenzene	1.43E-03	0.8	0.000011	2.1E-05	2.E-07	3.3E-04	4.E-04	2.E-07	4.E-04
Bromodichloromethane	3.35E-05	NA	0.000037	4.9E-07	2.E-08	NA	NA	2.E-08	NA
Chlorobenzene	4.60E-05	0.05	NA	NA	NA	1.1E-05	2.E-04	NA	2.E-04
C5-C8 Aliphatic Hydrocarbons	4.40E-02	0.2	NA	NA	NA	1.0E-02	5.E-02	NA	5.E-02
C9-C12 Aliphatic Hydrocarbons	2.80E-02	0.2	NA	NA	NA	6.4E-03	3.E-02	NA	3.E-02
C9-C10 Aromatic Hydrocarbons	ND	0.05	NA	ND	ND	ND	ND	ND	ND
Total					2.E-06		2.E-01	2.E-06	2.E-01

NA - Not available
NC - Not calculated
ND - Not detected

Exposure and Risk Estimates Associated With Inhalation of Volatile Compounds in Air
UniFirst Corporation
15 Olympia Avenue, Woburn, MA
Resident - Long Term
Indoor Air
Volatilization from Indoor Air
Warehouse
IA-05

Receptor:	Resident - Long Term
Medium of Origin:	Indoor Air
Exposure Medium:	Indoor Air
Exposure Area:	Warehouse
Depth:	NA
Duration:	NA

$$C_{air} = \frac{C_{source}}{AF}$$

$$EC_{inh} = \frac{C_{air} \times ET \times EF \times ED}{AT}$$

$$HI_{inh} = \frac{EC_{inh}}{RfC}$$

$$Risk = EC_{inh} \times URF \times CF$$

Parameter	Definition	Units	Value	Comment
ET	Indoor Air Exposure Time	hrs/d	24	
EF	Indoor Air Exposure Frequency	ds/y	350	
ED	Indoor Air Exposure Duration	y	30	
ATc	Indoor Air Averaging Time - Cancer	hrs	683280	
ATn	Indoor Air Averaging Time - Non-Cancer	hrs	262800	
CF	Conversion Factor	ug/mg	1000	

Compound	EPC Indoor Air (mg/m3)	RfC (mg/m3)	URF 1/(ug/m3)	ADE-c mg/m3	Riskinh	ADE-nc mg/m3	HIinh	Risk (Indoor Air)	HI (Indoor Air)
Chloroform	1.51E-04	0.098	0.000023	5.6E-05	1.E-06	1.4E-04	1.E-03	1.E-06	1.E-03
1,1-Dichloroethane	4.05E-05	NA	0.0000016	1.5E-05	2.E-08	NA	NA	2.E-08	NA
1,2-Dichloroethane	3.56E-04	2.4	0.000026	1.3E-04	3.E-06	3.4E-04	1.E-04	3.E-06	1.E-04
1,1-Dichloroethene	3.95E-05	0.2	NA	NA	NA	3.8E-05	2.E-04	NA	2.E-04
Tetrachloroethene	9.83E-03	0.27	0.0000059	3.6E-03	2.E-05	9.4E-03	3.E-02	2.E-05	3.E-02
Trichloroethene	1.18E-04	NA	0.000002	4.4E-05	9.E-08	NA	NA	9.E-08	NA
Vinyl chloride	ND	0.1	0.0000044	ND	ND	ND	ND	ND	ND
trans-1,2-Dichloroethene	3.95E-05	0.06	NA	NA	NA	3.8E-05	6.E-04	NA	6.E-04
cis-1,2-Dichloroethene	3.95E-05	0.035	NA	NA	NA	3.8E-05	1.E-03	NA	1.E-03
1,1,1-Trichloroethane	2.18E-04	5	NA	NA	NA	2.1E-04	4.E-05	NA	4.E-05
Methylene chloride	8.70E-04	1	0.00000047	3.2E-04	2.E-07	8.3E-04	8.E-04	2.E-07	8.E-04
Carbon tetrachloride	4.02E-04	0.1	0.000006	1.5E-04	9.E-07	3.9E-04	4.E-03	9.E-07	4.E-03
Xylenes	4.02E-03	0.1	NA	NA	NA	3.9E-03	4.E-02	NA	4.E-02
Toluene	7.56E-03	5	NA	NA	NA	7.2E-03	1.E-03	NA	1.E-03
1,2-Dibromoethane	ND	0.009	0.0006	ND	ND	ND	ND	ND	ND
Benzene	1.14E-03	0.03	0.0000078	4.2E-04	3.E-06	1.1E-03	4.E-02	3.E-06	4.E-02
Bromoform	ND	NA	0.0000011	ND	ND	ND	ND	ND	ND
Ethylbenzene	1.01E-03	1	0.0000025	3.7E-04	9.E-07	9.7E-04	1.E-03	9.E-07	1.E-03
IsoPropylbenzene	ND	0.4	NA	ND	ND	ND	ND	ND	ND
trans-1,3-Dichloropropene	ND	0.02	0.000004	ND	ND	ND	ND	ND	ND
Naphthalene	1.17E-03	0.003	0.000034	4.3E-04	1.E-05	1.1E-03	4.E-01	1.E-05	4.E-01
1,3-Butadiene	9.70E-05	0.002	0.00003	3.6E-05	1.E-06	9.3E-05	5.E-02	1.E-06	5.E-02
Methyl tert-butyl ether	1.66E-04	3	0.00000026	6.1E-05	2.E-08	1.6E-04	5.E-05	2.E-08	5.E-05
1,1,2-Trichloroethane	ND	NA	0.000016	ND	ND	ND	ND	ND	ND
1,2,4-Trimethylbenzene	1.02E-03	0.007	NA	NA	NA	9.8E-04	1.E-01	NA	1.E-01
1,2-Dichloropropane	ND	0.004	0.00001	ND	ND	ND	ND	ND	ND
1,3-Dichlorobenzene	ND	0.2	NA	ND	ND	ND	ND	ND	ND
1,4-Dichlorobenzene	1.43E-03	0.8	0.000011	5.3E-04	6.E-06	1.4E-03	2.E-03	6.E-06	2.E-03
Bromodichloromethane	3.35E-05	NA	0.000037	1.2E-05	5.E-07	NA	NA	5.E-07	NA
Chlorobenzene	4.60E-05	0.05	NA	NA	NA	4.4E-05	9.E-04	NA	9.E-04
C5-C8 Aliphatic Hydrocarbons	4.40E-02	0.2	NA	NA	NA	4.2E-02	2.E-01	NA	2.E-01
C9-C12 Aliphatic Hydrocarbons	2.80E-02	0.2	NA	NA	NA	2.7E-02	1.E-01	NA	1.E-01
C9-C10 Aromatic Hydrocarbons	ND	0.05	NA	ND	ND	ND	ND	ND	ND
Total					5.E-05		1.E+00	5.E-05	1.E+00

NA - Not available
NC - Not calculated
ND - Not detected

Exposure and Risk Estimates Associated With Inhalation of Volatile Compounds in Air
UniFirst Corporation
15 Olympia Avenue, Woburn, MA
Storage User - Long Term - Warehouse
Indoor Air
Volatilization from Indoor Air
Warehouse
IA-06

Receptor:	Storage User - Long Term - Warehou
Medium of Origin:	Indoor Air
Exposure Medium:	Indoor Air
Exposure Area:	Warehouse
Depth:	NA
Duration:	NA

$$C_{air} = \frac{C_{source}}{AF}$$

$$EC_{inh} = \frac{C_{air} \times ET \times EF \times ED}{AT}$$

$$HI_{inh} = \frac{EC_{inh}}{RfC}$$

$$Risk = EC_{inh} \times URF \times CF$$

Parameter	Definition	Units	Value	Comment
ET	Indoor Air Exposure Time	hrs/d	3	
EF	Indoor Air Exposure Frequency	ds/y	250	
ED	Indoor Air Exposure Duration	y	25	
ATc	Indoor Air Averaging Time - Cancer	hrs	683280	
ATn	Indoor Air Averaging Time - Non-Cancer	hrs	219000	
CF	Conversion Factor	ug/mg	1000	

Compound	EPC Indoor Air (mg/m3)	RfC (mg/m3)	URF 1/(ug/m3)	ADE-c mg/m3	Riskinh	ADE-nc mg/m3	HIinh	Risk (Indoor Air)	HI (Indoor Air)
Chloroform	1.61E-04	0.098	0.000023	4.4E-06	1.E-07	1.4E-05	1.E-04	1.E-07	1.E-04
1,1-Dichloroethane	4.05E-05	NA	0.0000016	1.1E-06	2.E-09	NA	NA	2.E-09	NA
1,2-Dichloroethane	5.62E-04	2.4	0.000026	1.5E-05	4.E-07	4.8E-05	2.E-05	4.E-07	2.E-05
1,1-Dichloroethene	3.95E-05	0.2	NA	NA	NA	3.4E-06	2.E-05	NA	2.E-05
Tetrachloroethene	3.69E-02	0.27	0.0000059	1.0E-03	6.E-06	3.2E-03	1.E-02	6.E-06	1.E-02
Trichloroethene	2.31E-04	NA	0.000002	6.3E-06	1.E-08	NA	NA	1.E-08	NA
Vinyl chloride	ND	0.1	0.0000044	ND	ND	ND	ND	ND	ND
trans-1,2-Dichloroethene	3.95E-05	0.06	NA	NA	NA	3.4E-06	6.E-05	NA	6.E-05
cis-1,2-Dichloroethene	3.95E-05	0.035	NA	NA	NA	3.4E-06	1.E-04	NA	1.E-04
1,1,1-Trichloroethane	4.25E-04	5	NA	NA	NA	3.6E-05	7.E-06	NA	7.E-06
Methylene chloride	8.70E-04	1	0.00000047	2.4E-05	1.E-08	7.4E-05	7.E-05	1.E-08	7.E-05
Carbon tetrachloride	4.53E-04	0.1	0.000006	1.2E-05	7.E-08	3.9E-05	4.E-04	7.E-08	4.E-04
Xylenes	3.09E-03	0.1	NA	NA	NA	2.6E-04	3.E-03	NA	3.E-03
Toluene	9.02E-03	5	NA	NA	NA	7.7E-04	2.E-04	NA	2.E-04
1,2-Dibromoethane	ND	0.009	0.0006	ND	ND	ND	ND	ND	ND
Benzene	1.18E-03	0.03	0.0000078	3.2E-05	3.E-07	1.0E-04	3.E-03	3.E-07	3.E-03
Bromoform	ND	NA	0.0000011	ND	ND	ND	ND	ND	ND
Ethylbenzene	8.11E-04	1	0.0000025	2.2E-05	6.E-08	6.9E-05	7.E-05	6.E-08	7.E-05
IsoPropylbenzene	ND	0.4	NA	ND	ND	ND	ND	ND	ND
trans-1,3-Dichloropropene	ND	0.02	0.000004	ND	ND	ND	ND	ND	ND
Naphthalene	3.49E-03	0.003	0.000034	9.6E-05	3.E-06	3.0E-04	1.E-01	3.E-06	1.E-01
1,3-Butadiene	6.60E-05	0.002	0.00003	1.8E-06	5.E-08	5.7E-06	3.E-03	5.E-08	3.E-03
Methyl tert-butyl ether	1.48E-04	3	0.00000026	4.1E-06	1.E-09	1.3E-05	4.E-06	1.E-09	4.E-06
1,1,2-Trichloroethane	ND	NA	0.000016	ND	ND	ND	ND	ND	ND
1,2,4-Trimethylbenzene	1.04E-03	0.007	NA	NA	NA	8.9E-05	1.E-02	NA	1.E-02
1,2-Dichloropropane	ND	0.004	0.00001	ND	ND	ND	ND	ND	ND
1,3-Dichlorobenzene	ND	0.2	NA	ND	ND	ND	ND	ND	ND
1,4-Dichlorobenzene	2.35E-03	0.8	0.000011	6.4E-05	7.E-07	2.0E-04	3.E-04	7.E-07	3.E-04
Bromodichloromethane	3.35E-05	NA	0.000037	9.2E-07	3.E-08	NA	NA	3.E-08	NA
Chlorobenzene	4.60E-05	0.05	NA	NA	NA	3.9E-06	8.E-05	NA	8.E-05
C5-C8 Aliphatic Hydrocarbons	5.10E-02	0.2	NA	NA	NA	4.4E-03	2.E-02	NA	2.E-02
C9-C12 Aliphatic Hydrocarbons	2.90E-02	0.2	NA	NA	NA	2.5E-03	1.E-02	NA	1.E-02
C9-C10 Aromatic Hydrocarbons	ND	0.05	NA	ND	ND	ND	ND	ND	ND
Total					1.E-05		2.E-01	1.E-05	2.E-01

NA - Not available
NC - Not calculated
ND - Not detected

Exposure and Risk Estimates Associated With Inhalation of Volatile Compounds in Air
UniFirst Corporation
15 Olympia Avenue, Woburn, MA
Storage User - Short Term - Warehouse
Indoor Air
Volatilization from Indoor Air
Warehouse
IA-06

Receptor:	Storage User - Short Term - Warehou
Medium of Origin:	Indoor Air
Exposure Medium:	Indoor Air
Exposure Area:	Warehouse
Depth:	NA
Duration:	NA

$$C_{air} = \frac{C_{source}}{AF}$$

$$EC_{inh} = \frac{C_{air} \times ET \times EF \times ED}{AT}$$

$$HI_{inh} = \frac{EC_{inh}}{RfC}$$

$$Risk = EC_{inh} \times URF \times CF$$

Parameter	Definition	Units	Value	Comment
ET	Indoor Air Exposure Time	hrs/d	3	
EF	Indoor Air Exposure Frequency	ds/y	250	
ED	Indoor Air Exposure Duration	y	5	
ATc	Indoor Air Averaging Time - Cancer	hrs	683280	
ATn	Indoor Air Averaging Time - Non-Cancer	hrs	43800	
CF	Conversion Factor	ug/mg	1000	

Compound	EPC Indoor Air (mg/m3)	RfC (mg/m3)	URF 1/(ug/m3)	ADE-c mg/m3	Riskinh	ADE-nc mg/m3	HIinh	Risk (Indoor Air)	HI (Indoor Air)
Chloroform	1.61E-04	0.098	0.000023	8.8E-07	2.E-08	1.4E-05	1.E-04	2.E-08	1.E-04
1,1-Dichloroethane	4.05E-05	NA	0.0000016	2.2E-07	4.E-10	NA	NA	4.E-10	NA
1,2-Dichloroethane	5.62E-04	2.4	0.000026	3.1E-06	8.E-08	4.8E-05	2.E-05	8.E-08	2.E-05
1,1-Dichloroethene	3.95E-05	0.2	NA	NA	NA	3.4E-06	2.E-05	NA	2.E-05
Tetrachloroethene	3.69E-02	0.27	0.0000059	2.0E-04	1.E-06	3.2E-03	1.E-02	1.E-06	1.E-02
Trichloroethene	2.31E-04	NA	0.000002	1.3E-06	3.E-09	NA	NA	3.E-09	NA
Vinyl chloride	ND	0.1	0.0000044	ND	ND	ND	ND	ND	ND
trans-1,2-Dichloroethene	3.95E-05	0.06	NA	NA	NA	3.4E-06	6.E-05	NA	6.E-05
cis-1,2-Dichloroethene	3.95E-05	0.035	NA	NA	NA	3.4E-06	1.E-04	NA	1.E-04
1,1,1-Trichloroethane	4.25E-04	5	NA	NA	NA	3.6E-05	7.E-06	NA	7.E-06
Methylene chloride	8.70E-04	1	0.00000047	4.8E-06	2.E-09	7.4E-05	7.E-05	2.E-09	7.E-05
Carbon tetrachloride	4.53E-04	0.1	0.000006	2.5E-06	1.E-08	3.9E-05	4.E-04	1.E-08	4.E-04
Xylenes	3.09E-03	0.1	NA	NA	NA	2.6E-04	3.E-03	NA	3.E-03
Toluene	9.02E-03	5	NA	NA	NA	7.7E-04	2.E-04	NA	2.E-04
1,2-Dibromoethane	ND	0.009	0.0006	ND	ND	ND	ND	ND	ND
Benzene	1.18E-03	0.03	0.0000078	6.5E-06	5.E-08	1.0E-04	3.E-03	5.E-08	3.E-03
Bromoform	ND	NA	0.0000011	ND	ND	ND	ND	ND	ND
Ethylbenzene	8.11E-04	1	0.0000025	4.5E-06	1.E-08	6.9E-05	7.E-05	1.E-08	7.E-05
IsoPropylbenzene	ND	0.4	NA	ND	ND	ND	ND	ND	ND
trans-1,3-Dichloropropene	ND	0.02	0.000004	ND	ND	ND	ND	ND	ND
Naphthalene	3.49E-03	0.003	0.000034	1.9E-05	7.E-07	3.0E-04	1.E-01	7.E-07	1.E-01
1,3-Butadiene	6.60E-05	0.002	0.00003	3.6E-07	1.E-08	5.7E-06	3.E-03	1.E-08	3.E-03
Methyl tert-butyl ether	1.48E-04	3	0.00000026	8.1E-07	2.E-10	1.3E-05	4.E-06	2.E-10	4.E-06
1,1,2-Trichloroethane	ND	NA	0.000016	ND	ND	ND	ND	ND	ND
1,2,4-Trimethylbenzene	1.04E-03	0.007	NA	NA	NA	8.9E-05	1.E-02	NA	1.E-02
1,2-Dichloropropane	ND	0.004	0.00001	ND	ND	ND	ND	ND	ND
1,3-Dichlorobenzene	ND	0.2	NA	ND	ND	ND	ND	ND	ND
1,4-Dichlorobenzene	2.35E-03	0.8	0.000011	1.3E-05	1.E-07	2.0E-04	3.E-04	1.E-07	3.E-04
Bromodichloromethane	3.35E-05	NA	0.000037	1.8E-07	7.E-09	NA	NA	7.E-09	NA
Chlorobenzene	4.60E-05	0.05	NA	NA	NA	3.9E-06	8.E-05	NA	8.E-05
C5-C8 Aliphatic Hydrocarbons	5.10E-02	0.2	NA	NA	NA	4.4E-03	2.E-02	NA	2.E-02
C9-C12 Aliphatic Hydrocarbons	2.90E-02	0.2	NA	NA	NA	2.5E-03	1.E-02	NA	1.E-02
C9-C10 Aromatic Hydrocarbons	ND	0.05	NA	ND	ND	ND	ND	ND	ND
Total					2.E-06		2.E-01	2.E-06	2.E-01

NA - Not available
NC - Not calculated
ND - Not detected

Exposure and Risk Estimates Associated With Inhalation of Volatile Compounds in Air
UniFirst Corporation
15 Olympia Avenue, Woburn, MA
Commercial/Industrial Worker - Long Term
Indoor Air
Volatilization from Indoor Air
Warehouse
IA-06

Receptor:	Commercial/Industrial Worker - Long
Medium of Origin:	Indoor Air
Exposure Medium:	Indoor Air
Exposure Area:	Warehouse
Depth:	NA
Duration:	NA

$$C_{air} = \frac{C_{source}}{AF}$$

$$EC_{inh} = \frac{C_{air} \times ET \times EF \times ED}{AT}$$

$$HI_{inh} = \frac{EC_{inh}}{RfC}$$

$$Risk = EC_{inh} \times URF \times CF$$

Parameter	Definition	Units	Value	Comment
ET	Indoor Air Exposure Time	hrs/d	8	
EF	Indoor Air Exposure Frequency	ds/y	250	
ED	Indoor Air Exposure Duration	y	25	
ATc	Indoor Air Averaging Time - Cancer	hrs	683280	
ATn	Indoor Air Averaging Time - Non-Cancer	hrs	219000	
CF	Conversion Factor	ug/mg	1000	

Compound	EPC Indoor Air (mg/m3)	RfC (mg/m3)	URF 1/(ug/m3)	ADE-c mg/m3	Riskinh	ADE-nc mg/m3	HIinh	Risk (Indoor Air)	HI (Indoor Air)
Chloroform	1.61E-04	0.098	0.000023	1.2E-05	3.E-07	3.7E-05	4.E-04	3.E-07	4.E-04
1,1-Dichloroethane	4.05E-05	NA	0.0000016	3.0E-06	5.E-09	NA	NA	5.E-09	NA
1,2-Dichloroethane	5.62E-04	2.4	0.000026	4.1E-05	1.E-06	1.3E-04	5.E-05	1.E-06	5.E-05
1,1-Dichloroethene	3.95E-05	0.2	NA	NA	NA	9.0E-06	5.E-05	NA	5.E-05
Tetrachloroethene	3.69E-02	0.27	0.0000059	2.7E-03	2.E-05	8.4E-03	3.E-02	2.E-05	3.E-02
Trichloroethene	2.31E-04	NA	0.000002	1.7E-05	3.E-08	NA	NA	3.E-08	NA
Vinyl chloride	ND	0.1	0.0000044	ND	ND	ND	ND	ND	ND
trans-1,2-Dichloroethene	3.95E-05	0.06	NA	NA	NA	9.0E-06	2.E-04	NA	2.E-04
cis-1,2-Dichloroethene	3.95E-05	0.035	NA	NA	NA	9.0E-06	3.E-04	NA	3.E-04
1,1,1-Trichloroethane	4.25E-04	5	NA	NA	NA	9.7E-05	2.E-05	NA	2.E-05
Methylene chloride	8.70E-04	1	0.00000047	6.4E-05	3.E-08	2.0E-04	2.E-04	3.E-08	2.E-04
Carbon tetrachloride	4.53E-04	0.1	0.000006	3.3E-05	2.E-07	1.0E-04	1.E-03	2.E-07	1.E-03
Xylenes	3.09E-03	0.1	NA	NA	NA	7.1E-04	7.E-03	NA	7.E-03
Toluene	9.02E-03	5	NA	NA	NA	2.1E-03	4.E-04	NA	4.E-04
1,2-Dibromoethane	ND	0.009	0.0006	ND	ND	ND	ND	ND	ND
Benzene	1.18E-03	0.03	0.0000078	8.6E-05	7.E-07	2.7E-04	9.E-03	7.E-07	9.E-03
Bromoform	ND	NA	0.0000011	ND	ND	ND	ND	ND	ND
Ethylbenzene	8.11E-04	1	0.0000025	5.9E-05	1.E-07	1.9E-04	2.E-04	1.E-07	2.E-04
IsoPropylbenzene	ND	0.4	NA	ND	ND	ND	ND	ND	ND
trans-1,3-Dichloropropene	ND	0.02	0.000004	ND	ND	ND	ND	ND	ND
Naphthalene	3.49E-03	0.003	0.000034	2.6E-04	9.E-06	8.0E-04	3.E-01	9.E-06	3.E-01
1,3-Butadiene	6.60E-05	0.002	0.00003	4.8E-06	1.E-07	1.5E-05	8.E-03	1.E-07	8.E-03
Methyl tert-butyl ether	1.48E-04	3	0.00000026	1.1E-05	3.E-09	3.4E-05	1.E-05	3.E-09	1.E-05
1,1,2-Trichloroethane	ND	NA	0.000016	ND	ND	ND	ND	ND	ND
1,2,4-Trimethylbenzene	1.04E-03	0.007	NA	NA	NA	2.4E-04	3.E-02	NA	3.E-02
1,2-Dichloropropane	ND	0.004	0.00001	ND	ND	ND	ND	ND	ND
1,3-Dichlorobenzene	ND	0.2	NA	ND	ND	ND	ND	ND	ND
1,4-Dichlorobenzene	2.35E-03	0.8	0.000011	1.7E-04	2.E-06	5.4E-04	7.E-04	2.E-06	7.E-04
Bromodichloromethane	3.35E-05	NA	0.000037	2.5E-06	9.E-08	NA	NA	9.E-08	NA
Chlorobenzene	4.60E-05	0.05	NA	NA	NA	1.1E-05	2.E-04	NA	2.E-04
C5-C8 Aliphatic Hydrocarbons	5.10E-02	0.2	NA	NA	NA	1.2E-02	6.E-02	NA	6.E-02
C9-C12 Aliphatic Hydrocarbons	2.90E-02	0.2	NA	NA	NA	6.6E-03	3.E-02	NA	3.E-02
C9-C10 Aromatic Hydrocarbons	ND	0.05	NA	ND	ND	ND	ND	ND	ND
Total					3.E-05		4.E-01	3.E-05	4.E-01

NA - Not available
NC - Not calculated
ND - Not detected

Exposure and Risk Estimates Associated With Inhalation of Volatile Compounds in Air
UniFirst Corporation
15 Olympia Avenue, Woburn, MA
Commercial/Industrial Worker - Short Term
Indoor Air
Volatilization from Indoor Air
Warehouse
IA-06

Receptor:	Commercial/Industrial Worker - Short
Medium of Origin:	Indoor Air
Exposure Medium:	Indoor Air
Exposure Area:	Warehouse
Depth:	NA
Duration:	NA

$$C_{air} = \frac{C_{source}}{AF}$$

$$EC_{inh} = \frac{C_{air} \times ET \times EF \times ED}{AT}$$

$$HI_{inh} = \frac{EC_{inh}}{RfC}$$

$$Risk = EC_{inh} \times URF \times CF$$

Parameter	Definition	Units	Value	Comment
ET	Indoor Air Exposure Time	hrs/d	8	
EF	Indoor Air Exposure Frequency	ds/y	250	
ED	Indoor Air Exposure Duration	y	5	
ATc	Indoor Air Averaging Time - Cancer	hrs	683280	
ATn	Indoor Air Averaging Time - Non-Cancer	hrs	43800	
CF	Conversion Factor	ug/mg	1000	

Compound	EPC Indoor Air (mg/m3)	RfC (mg/m3)	URF 1/(ug/m3)	ADE-c mg/m3	Riskinh	ADE-nc mg/m3	HIinh	Risk (Indoor Air)	HI (Indoor Air)
Chloroform	1.61E-04	0.098	0.000023	2.4E-06	5.E-08	3.7E-05	4.E-04	5.E-08	4.E-04
1,1-Dichloroethane	4.05E-05	NA	0.0000016	5.9E-07	9.E-10	NA	NA	9.E-10	NA
1,2-Dichloroethane	5.62E-04	2.4	0.000026	8.2E-06	2.E-07	1.3E-04	5.E-05	2.E-07	5.E-05
1,1-Dichloroethene	3.95E-05	0.2	NA	NA	NA	9.0E-06	5.E-05	NA	5.E-05
Tetrachloroethene	3.69E-02	0.27	0.0000059	5.4E-04	3.E-06	8.4E-03	3.E-02	3.E-06	3.E-02
Trichloroethene	2.31E-04	NA	0.000002	3.4E-06	7.E-09	NA	NA	7.E-09	NA
Vinyl chloride	ND	0.1	0.0000044	ND	ND	ND	ND	ND	ND
trans-1,2-Dichloroethene	3.95E-05	0.06	NA	NA	NA	9.0E-06	2.E-04	NA	2.E-04
cis-1,2-Dichloroethene	3.95E-05	0.035	NA	NA	NA	9.0E-06	3.E-04	NA	3.E-04
1,1,1-Trichloroethane	4.25E-04	5	NA	NA	NA	9.7E-05	2.E-05	NA	2.E-05
Methylene chloride	8.70E-04	1	0.00000047	1.3E-05	6.E-09	2.0E-04	2.E-04	6.E-09	2.E-04
Carbon tetrachloride	4.53E-04	0.1	0.000006	6.6E-06	4.E-08	1.0E-04	1.E-03	4.E-08	1.E-03
Xylenes	3.09E-03	0.1	NA	NA	NA	7.1E-04	7.E-03	NA	7.E-03
Toluene	9.02E-03	5	NA	NA	NA	2.1E-03	4.E-04	NA	4.E-04
1,2-Dibromoethane	ND	0.009	0.0006	ND	ND	ND	ND	ND	ND
Benzene	1.18E-03	0.03	0.0000078	1.7E-05	1.E-07	2.7E-04	9.E-03	1.E-07	9.E-03
Bromoform	ND	NA	0.0000011	ND	ND	ND	ND	ND	ND
Ethylbenzene	8.11E-04	1	0.0000025	1.2E-05	3.E-08	1.9E-04	2.E-04	3.E-08	2.E-04
IsoPropylbenzene	ND	0.4	NA	ND	ND	ND	ND	ND	ND
trans-1,3-Dichloropropene	ND	0.02	0.000004	ND	ND	ND	ND	ND	ND
Naphthalene	3.49E-03	0.003	0.000034	5.1E-05	2.E-06	8.0E-04	3.E-01	2.E-06	3.E-01
1,3-Butadiene	6.60E-05	0.002	0.00003	9.7E-07	3.E-08	1.5E-05	8.E-03	3.E-08	8.E-03
Methyl tert-butyl ether	1.48E-04	3	0.00000026	2.2E-06	6.E-10	3.4E-05	1.E-05	6.E-10	1.E-05
1,1,2-Trichloroethane	ND	NA	0.000016	ND	ND	ND	ND	ND	ND
1,2,4-Trimethylbenzene	1.04E-03	0.007	NA	NA	NA	2.4E-04	3.E-02	NA	3.E-02
1,2-Dichloropropane	ND	0.004	0.00001	ND	ND	ND	ND	ND	ND
1,3-Dichlorobenzene	ND	0.2	NA	ND	ND	ND	ND	ND	ND
1,4-Dichlorobenzene	2.35E-03	0.8	0.000011	3.4E-05	4.E-07	5.4E-04	7.E-04	4.E-07	7.E-04
Bromodichloromethane	3.35E-05	NA	0.000037	4.9E-07	2.E-08	NA	NA	2.E-08	NA
Chlorobenzene	4.60E-05	0.05	NA	NA	NA	1.1E-05	2.E-04	NA	2.E-04
C5-C8 Aliphatic Hydrocarbons	5.10E-02	0.2	NA	NA	NA	1.2E-02	6.E-02	NA	6.E-02
C9-C12 Aliphatic Hydrocarbons	2.90E-02	0.2	NA	NA	NA	6.6E-03	3.E-02	NA	3.E-02
C9-C10 Aromatic Hydrocarbons	ND	0.05	NA	ND	ND	ND	ND	ND	ND
Total					6.E-06		4.E-01	6.E-06	4.E-01

NA - Not available
NC - Not calculated
ND - Not detected

Exposure and Risk Estimates Associated With Inhalation of Volatile Compounds in Air
UniFirst Corporation
15 Olympia Avenue, Woburn, MA
Resident - Long Term
Indoor Air
Volatilization from Indoor Air
Warehouse
IA-06

Receptor:	Resident - Long Term
Medium of Origin:	Indoor Air
Exposure Medium:	Indoor Air
Exposure Area:	Warehouse
Depth:	NA
Duration:	NA

$$C_{air} = \frac{C_{source}}{AF}$$

$$EC_{inh} = \frac{C_{air} \times ET \times EF \times ED}{AT}$$

$$HI_{inh} = \frac{EC_{inh}}{RfC}$$

$$Risk = EC_{inh} \times URF \times CF$$

Parameter	Definition	Units	Value	Comment
ET	Indoor Air Exposure Time	hrs/d	24	
EF	Indoor Air Exposure Frequency	ds/y	350	
ED	Indoor Air Exposure Duration	y	30	
ATc	Indoor Air Averaging Time - Cancer	hrs	683280	
ATn	Indoor Air Averaging Time - Non-Cancer	hrs	262800	
CF	Conversion Factor	ug/mg	1000	

Compound	EPC Indoor Air (mg/m3)	RfC (mg/m3)	URF 1/(ug/m3)	ADE-c mg/m3	Riskinh	ADE-nc mg/m3	HIinh	Risk (Indoor Air)	HI (Indoor Air)
Chloroform	1.61E-04	0.098	0.000023	5.9E-05	1.E-06	1.5E-04	2.E-03	1.E-06	2.E-03
1,1-Dichloroethane	4.05E-05	NA	0.0000016	1.5E-05	2.E-08	NA	NA	2.E-08	NA
1,2-Dichloroethane	5.62E-04	2.4	0.000026	2.1E-04	5.E-06	5.4E-04	2.E-04	5.E-06	2.E-04
1,1-Dichloroethene	3.95E-05	0.2	NA	NA	NA	3.8E-05	2.E-04	NA	2.E-04
Tetrachloroethene	3.69E-02	0.27	0.0000059	1.4E-02	8.E-05	3.5E-02	1.E-01	8.E-05	1.E-01
Trichloroethene	2.31E-04	NA	0.000002	8.5E-05	2.E-07	NA	NA	2.E-07	NA
Vinyl chloride	ND	0.1	0.0000044	ND	ND	ND	ND	ND	ND
trans-1,2-Dichloroethene	3.95E-05	0.06	NA	NA	NA	3.8E-05	6.E-04	NA	6.E-04
cis-1,2-Dichloroethene	3.95E-05	0.035	NA	NA	NA	3.8E-05	1.E-03	NA	1.E-03
1,1,1-Trichloroethane	4.25E-04	5	NA	NA	NA	4.1E-04	8.E-05	NA	8.E-05
Methylene chloride	8.70E-04	1	0.00000047	3.2E-04	2.E-07	8.3E-04	8.E-04	2.E-07	8.E-04
Carbon tetrachloride	4.53E-04	0.1	0.000006	1.7E-04	1.E-06	4.3E-04	4.E-03	1.E-06	4.E-03
Xylenes	3.09E-03	0.1	NA	NA	NA	3.0E-03	3.E-02	NA	3.E-02
Toluene	9.02E-03	5	NA	NA	NA	8.6E-03	2.E-03	NA	2.E-03
1,2-Dibromoethane	ND	0.009	0.0006	ND	ND	ND	ND	ND	ND
Benzene	1.18E-03	0.03	0.0000078	4.4E-04	3.E-06	1.1E-03	4.E-02	3.E-06	4.E-02
Bromoform	ND	NA	0.0000011	ND	ND	ND	ND	ND	ND
Ethylbenzene	8.11E-04	1	0.0000025	3.0E-04	7.E-07	7.8E-04	8.E-04	7.E-07	8.E-04
IsoPropylbenzene	ND	0.4	NA	ND	ND	ND	ND	ND	ND
trans-1,3-Dichloropropene	ND	0.02	0.000004	ND	ND	ND	ND	ND	ND
Naphthalene	3.49E-03	0.003	0.000034	1.3E-03	4.E-05	3.3E-03	1.E+00	4.E-05	1.E+00
1,3-Butadiene	6.60E-05	0.002	0.00003	2.4E-05	7.E-07	6.3E-05	3.E-02	7.E-07	3.E-02
Methyl tert-butyl ether	1.48E-04	3	0.00000026	5.5E-05	1.E-08	1.4E-04	5.E-05	1.E-08	5.E-05
1,1,2-Trichloroethane	ND	NA	0.000016	ND	ND	ND	ND	ND	ND
1,2,4-Trimethylbenzene	1.04E-03	0.007	NA	NA	NA	1.0E-03	1.E-01	NA	1.E-01
1,2-Dichloropropane	ND	0.004	0.00001	ND	ND	ND	ND	ND	ND
1,3-Dichlorobenzene	ND	0.2	NA	ND	ND	ND	ND	ND	ND
1,4-Dichlorobenzene	2.35E-03	0.8	0.000011	8.7E-04	1.E-05	2.3E-03	3.E-03	1.E-05	3.E-03
Bromodichloromethane	3.35E-05	NA	0.000037	1.2E-05	5.E-07	NA	NA	5.E-07	NA
Chlorobenzene	4.60E-05	0.05	NA	NA	NA	4.4E-05	9.E-04	NA	9.E-04
C5-C8 Aliphatic Hydrocarbons	5.10E-02	0.2	NA	NA	NA	4.9E-02	2.E-01	NA	2.E-01
C9-C12 Aliphatic Hydrocarbons	2.90E-02	0.2	NA	NA	NA	2.8E-02	1.E-01	NA	1.E-01
C9-C10 Aromatic Hydrocarbons	ND	0.05	NA	ND	ND	ND	ND	ND	ND
Total					1.E-04		2.E+00	1.E-04	2.E+00

NA - Not available
NC - Not calculated
ND - Not detected

Exposure and Risk Estimates Associated With Inhalation of Volatile Compounds in Air
UniFirst Corporation
15 Olympia Avenue, Woburn, MA
Storage User - Long Term - Warehouse
Indoor Air
Volatilization from Indoor Air
Warehouse
IA-07

Receptor:	Storage User - Long Term - Warehou
Medium of Origin:	Indoor Air
Exposure Medium:	Indoor Air
Exposure Area:	Warehouse
Depth:	NA
Duration:	NA

$$C_{air} = \frac{C_{source}}{AF}$$

$$EC_{inh} = \frac{C_{air} \times ET \times EF \times ED}{AT}$$

$$HI_{inh} = \frac{EC_{inh}}{RfC}$$

$$Risk = EC_{inh} \times URF \times CF$$

Parameter	Definition	Units	Value	Comment
ET	Indoor Air Exposure Time	hrs/d	3	
EF	Indoor Air Exposure Frequency	ds/y	250	
ED	Indoor Air Exposure Duration	y	25	
ATc	Indoor Air Averaging Time - Cancer	hrs	683280	
ATn	Indoor Air Averaging Time - Non-Cancer	hrs	219000	
CF	Conversion Factor	ug/mg	1000	

Compound	EPC Indoor Air (mg/m3)	RfC (mg/m3)	URF 1/(ug/m3)	ADE-c mg/m3	Riskinh	ADE-nc mg/m3	HIinh	Risk (Indoor Air)	HI (Indoor Air)
Chloroform	1.51E-04	0.098	0.000023	4.1E-06	1.E-07	1.3E-05	1.E-04	1.E-07	1.E-04
1,1-Dichloroethane	4.05E-05	NA	0.0000016	1.1E-06	2.E-09	NA	NA	2.E-09	NA
1,2-Dichloroethane	6.63E-04	2.4	0.000026	1.8E-05	5.E-07	5.7E-05	2.E-05	5.E-07	2.E-05
1,1-Dichloroethene	3.95E-05	0.2	NA	NA	NA	3.4E-06	2.E-05	NA	2.E-05
Tetrachloroethene	2.99E-02	0.27	0.0000059	8.2E-04	5.E-06	2.6E-03	9.E-03	5.E-06	9.E-03
Trichloroethene	3.22E-04	NA	0.000002	8.8E-06	2.E-08	NA	NA	2.E-08	NA
Vinyl chloride	ND	0.1	0.0000044	ND	ND	ND	ND	ND	ND
trans-1,2-Dichloroethene	3.95E-05	0.06	NA	NA	NA	3.4E-06	6.E-05	NA	6.E-05
cis-1,2-Dichloroethene	1.11E-04	0.035	NA	NA	NA	9.5E-06	3.E-04	NA	3.E-04
1,1,1-Trichloroethane	4.91E-04	5	NA	NA	NA	4.2E-05	8.E-06	NA	8.E-06
Methylene chloride	1.74E-03	1	0.00000047	4.8E-05	2.E-08	1.5E-04	1.E-04	2.E-08	1.E-04
Carbon tetrachloride	4.21E-04	0.1	0.000006	1.2E-05	7.E-08	3.6E-05	4.E-04	7.E-08	4.E-04
Xylenes	3.06E-03	0.1	NA	NA	NA	2.6E-04	3.E-03	NA	3.E-03
Toluene	1.07E-02	5	NA	NA	NA	9.2E-04	2.E-04	NA	2.E-04
1,2-Dibromoethane	ND	0.009	0.0006	ND	ND	ND	ND	ND	ND
Benzene	9.93E-04	0.03	0.0000078	2.7E-05	2.E-07	8.5E-05	3.E-03	2.E-07	3.E-03
Bromoform	ND	NA	0.0000011	ND	ND	ND	ND	ND	ND
Ethylbenzene	8.20E-04	1	0.0000025	2.3E-05	6.E-08	7.0E-05	7.E-05	6.E-08	7.E-05
IsoPropylbenzene	ND	0.4	NA	ND	ND	ND	ND	ND	ND
trans-1,3-Dichloropropene	ND	0.02	0.000004	ND	ND	ND	ND	ND	ND
Naphthalene	4.30E-03	0.003	0.000034	1.2E-04	4.E-06	3.7E-04	1.E-01	4.E-06	1.E-01
1,3-Butadiene	6.20E-05	0.002	0.00003	1.7E-06	5.E-08	5.3E-06	3.E-03	5.E-08	3.E-03
Methyl tert-butyl ether	1.98E-04	3	0.00000026	5.4E-06	1.E-09	1.7E-05	6.E-06	1.E-09	6.E-06
1,1,2-Trichloroethane	ND	NA	0.000016	ND	ND	ND	ND	ND	ND
1,2,4-Trimethylbenzene	9.58E-04	0.007	NA	NA	NA	8.2E-05	1.E-02	NA	1.E-02
1,2-Dichloropropane	ND	0.004	0.00001	ND	ND	ND	ND	ND	ND
1,3-Dichlorobenzene	ND	0.2	NA	ND	ND	ND	ND	ND	ND
1,4-Dichlorobenzene	3.75E-03	0.8	0.000011	1.0E-04	1.E-06	3.2E-04	4.E-04	1.E-06	4.E-04
Bromodichloromethane	3.35E-05	NA	0.000037	9.2E-07	3.E-08	NA	NA	3.E-08	NA
Chlorobenzene	4.60E-05	0.05	NA	NA	NA	3.9E-06	8.E-05	NA	8.E-05
C5-C8 Aliphatic Hydrocarbons	4.60E-02	0.2	NA	NA	NA	3.9E-03	2.E-02	NA	2.E-02
C9-C12 Aliphatic Hydrocarbons	3.20E-02	0.2	NA	NA	NA	2.7E-03	1.E-02	NA	1.E-02
C9-C10 Aromatic Hydrocarbons	ND	0.05	NA	ND	ND	ND	ND	ND	ND
Total					1.E-05		2.E-01	1.E-05	2.E-01

NA - Not available
NC - Not calculated
ND - Not detected

Exposure and Risk Estimates Associated With Inhalation of Volatile Compounds in Air
UniFirst Corporation
15 Olympia Avenue, Woburn, MA
Storage User - Short Term - Warehouse
Indoor Air
Volatilization from Indoor Air
Warehouse
IA-07

Receptor:	Storage User - Short Term - Warehou
Medium of Origin:	Indoor Air
Exposure Medium:	Indoor Air
Exposure Area:	Warehouse
Depth:	NA
Duration:	NA

$$C_{air} = \frac{C_{source}}{AF}$$

$$EC_{inh} = \frac{C_{air} \times ET \times EF \times ED}{AT}$$

$$HI_{inh} = \frac{EC_{inh}}{RfC}$$

$$Risk = EC_{inh} \times URF \times CF$$

Parameter	Definition	Units	Value	Comment
ET	Indoor Air Exposure Time	hrs/d	3	
EF	Indoor Air Exposure Frequency	ds/y	250	
ED	Indoor Air Exposure Duration	y	5	
ATc	Indoor Air Averaging Time - Cancer	hrs	683280	
ATn	Indoor Air Averaging Time - Non-Cancer	hrs	43800	
CF	Conversion Factor	ug/mg	1000	

Compound	EPC Indoor Air (mg/m3)	RfC (mg/m3)	URF 1/(ug/m3)	ADE-c mg/m3	Riskinh	ADE-nc mg/m3	HIinh	Risk (Indoor Air)	HI (Indoor Air)
Chloroform	1.51E-04	0.098	0.000023	8.3E-07	2.E-08	1.3E-05	1.E-04	2.E-08	1.E-04
1,1-Dichloroethane	4.05E-05	NA	0.0000016	2.2E-07	4.E-10	NA	NA	4.E-10	NA
1,2-Dichloroethane	6.63E-04	2.4	0.000026	3.6E-06	9.E-08	5.7E-05	2.E-05	9.E-08	2.E-05
1,1-Dichloroethene	3.95E-05	0.2	NA	NA	NA	3.4E-06	2.E-05	NA	2.E-05
Tetrachloroethene	2.99E-02	0.27	0.0000059	1.6E-04	1.E-06	2.6E-03	9.E-03	1.E-06	9.E-03
Trichloroethene	3.22E-04	NA	0.000002	1.8E-06	4.E-09	NA	NA	4.E-09	NA
Vinyl chloride	ND	0.1	0.0000044	ND	ND	ND	ND	ND	ND
trans-1,2-Dichloroethene	3.95E-05	0.06	NA	NA	NA	3.4E-06	6.E-05	NA	6.E-05
cis-1,2-Dichloroethene	1.11E-04	0.035	NA	NA	NA	9.5E-06	3.E-04	NA	3.E-04
1,1,1-Trichloroethane	4.91E-04	5	NA	NA	NA	4.2E-05	8.E-06	NA	8.E-06
Methylene chloride	1.74E-03	1	0.00000047	9.5E-06	4.E-09	1.5E-04	1.E-04	4.E-09	1.E-04
Carbon tetrachloride	4.21E-04	0.1	0.000006	2.3E-06	1.E-08	3.6E-05	4.E-04	1.E-08	4.E-04
Xylenes	3.06E-03	0.1	NA	NA	NA	2.6E-04	3.E-03	NA	3.E-03
Toluene	1.07E-02	5	NA	NA	NA	9.2E-04	2.E-04	NA	2.E-04
1,2-Dibromoethane	ND	0.009	0.0006	ND	ND	ND	ND	ND	ND
Benzene	9.93E-04	0.03	0.0000078	5.4E-06	4.E-08	8.5E-05	3.E-03	4.E-08	3.E-03
Bromoform	ND	NA	0.0000011	ND	ND	ND	ND	ND	ND
Ethylbenzene	8.20E-04	1	0.0000025	4.5E-06	1.E-08	7.0E-05	7.E-05	1.E-08	7.E-05
IsoPropylbenzene	ND	0.4	NA	ND	ND	ND	ND	ND	ND
trans-1,3-Dichloropropene	ND	0.02	0.000004	ND	ND	ND	ND	ND	ND
Naphthalene	4.30E-03	0.003	0.000034	2.4E-05	8.E-07	3.7E-04	1.E-01	8.E-07	1.E-01
1,3-Butadiene	6.20E-05	0.002	0.00003	3.4E-07	1.E-08	5.3E-06	3.E-03	1.E-08	3.E-03
Methyl tert-butyl ether	1.98E-04	3	0.00000026	1.1E-06	3.E-10	1.7E-05	6.E-06	3.E-10	6.E-06
1,1,2-Trichloroethane	ND	NA	0.000016	ND	ND	ND	ND	ND	ND
1,2,4-Trimethylbenzene	9.58E-04	0.007	NA	NA	NA	8.2E-05	1.E-02	NA	1.E-02
1,2-Dichloropropane	ND	0.004	0.00001	ND	ND	ND	ND	ND	ND
1,3-Dichlorobenzene	ND	0.2	NA	ND	ND	ND	ND	ND	ND
1,4-Dichlorobenzene	3.75E-03	0.8	0.000011	2.1E-05	2.E-07	3.2E-04	4.E-04	2.E-07	4.E-04
Bromodichloromethane	3.35E-05	NA	0.000037	1.8E-07	7.E-09	NA	NA	7.E-09	NA
Chlorobenzene	4.60E-05	0.05	NA	NA	NA	3.9E-06	8.E-05	NA	8.E-05
C5-C8 Aliphatic Hydrocarbons	4.60E-02	0.2	NA	NA	NA	3.9E-03	2.E-02	NA	2.E-02
C9-C12 Aliphatic Hydrocarbons	3.20E-02	0.2	NA	NA	NA	2.7E-03	1.E-02	NA	1.E-02
C9-C10 Aromatic Hydrocarbons	ND	0.05	NA	ND	ND	ND	ND	ND	ND
Total					2.E-06		2.E-01	2.E-06	2.E-01

NA - Not available
NC - Not calculated
ND - Not detected

Exposure and Risk Estimates Associated With Inhalation of Volatile Compounds in Air
UniFirst Corporation
15 Olympia Avenue, Woburn, MA
Commercial/Industrial Worker - Long Term
Indoor Air
Volatilization from Indoor Air
Warehouse
IA-07

Receptor:	Commercial/Industrial Worker - Long
Medium of Origin:	Indoor Air
Exposure Medium:	Indoor Air
Exposure Area:	Warehouse
Depth:	NA
Duration:	NA

$$C_{air} = \frac{C_{source}}{AF}$$

$$EC_{inh} = \frac{C_{air} \times ET \times EF \times ED}{AT}$$

$$HI_{inh} = \frac{EC_{inh}}{RfC}$$

$$Risk = EC_{inh} \times URF \times CF$$

Parameter	Definition	Units	Value	Comment
ET	Indoor Air Exposure Time	hrs/d	8	
EF	Indoor Air Exposure Frequency	ds/y	250	
ED	Indoor Air Exposure Duration	y	25	
ATc	Indoor Air Averaging Time - Cancer	hrs	683280	
ATn	Indoor Air Averaging Time - Non-Cancer	hrs	219000	
CF	Conversion Factor	ug/mg	1000	

Compound	EPC Indoor Air (mg/m3)	RfC (mg/m3)	URF 1/(ug/m3)	ADE-c mg/m3	Riskinh	ADE-nc mg/m3	HIinh	Risk (Indoor Air)	HI (Indoor Air)
Chloroform	1.51E-04	0.098	0.000023	1.1E-05	3.E-07	3.4E-05	4.E-04	3.E-07	4.E-04
1,1-Dichloroethane	4.05E-05	NA	0.0000016	3.0E-06	5.E-09	NA	NA	5.E-09	NA
1,2-Dichloroethane	6.63E-04	2.4	0.000026	4.9E-05	1.E-06	1.5E-04	6.E-05	1.E-06	6.E-05
1,1-Dichloroethene	3.95E-05	0.2	NA	NA	NA	9.0E-06	5.E-05	NA	5.E-05
Tetrachloroethene	2.99E-02	0.27	0.0000059	2.2E-03	1.E-05	6.8E-03	3.E-02	1.E-05	3.E-02
Trichloroethene	3.22E-04	NA	0.000002	2.4E-05	5.E-08	NA	NA	5.E-08	NA
Vinyl chloride	ND	0.1	0.0000044	ND	ND	ND	ND	ND	ND
trans-1,2-Dichloroethene	3.95E-05	0.06	NA	NA	NA	9.0E-06	2.E-04	NA	2.E-04
cis-1,2-Dichloroethene	1.11E-04	0.035	NA	NA	NA	2.5E-05	7.E-04	NA	7.E-04
1,1,1-Trichloroethane	4.91E-04	5	NA	NA	NA	1.1E-04	2.E-05	NA	2.E-05
Methylene chloride	1.74E-03	1	0.00000047	1.3E-04	6.E-08	4.0E-04	4.E-04	6.E-08	4.E-04
Carbon tetrachloride	4.21E-04	0.1	0.000006	3.1E-05	2.E-07	9.6E-05	1.E-03	2.E-07	1.E-03
Xylenes	3.06E-03	0.1	NA	NA	NA	7.0E-04	7.E-03	NA	7.E-03
Toluene	1.07E-02	5	NA	NA	NA	2.4E-03	5.E-04	NA	5.E-04
1,2-Dibromoethane	ND	0.009	0.0006	ND	ND	ND	ND	ND	ND
Benzene	9.93E-04	0.03	0.0000078	7.3E-05	6.E-07	2.3E-04	8.E-03	6.E-07	8.E-03
Bromoform	ND	NA	0.0000011	ND	ND	ND	ND	ND	ND
Ethylbenzene	8.20E-04	1	0.0000025	6.0E-05	2.E-07	1.9E-04	2.E-04	2.E-07	2.E-04
IsoPropylbenzene	ND	0.4	NA	ND	ND	ND	ND	ND	ND
trans-1,3-Dichloropropene	ND	0.02	0.000004	ND	ND	ND	ND	ND	ND
Naphthalene	4.30E-03	0.003	0.000034	3.1E-04	1.E-05	9.8E-04	3.E-01	1.E-05	3.E-01
1,3-Butadiene	6.20E-05	0.002	0.00003	4.5E-06	1.E-07	1.4E-05	7.E-03	1.E-07	7.E-03
Methyl tert-butyl ether	1.98E-04	3	0.00000026	1.4E-05	4.E-09	4.5E-05	2.E-05	4.E-09	2.E-05
1,1,2-Trichloroethane	ND	NA	0.000016	ND	ND	ND	ND	ND	ND
1,2,4-Trimethylbenzene	9.58E-04	0.007	NA	NA	NA	2.2E-04	3.E-02	NA	3.E-02
1,2-Dichloropropane	ND	0.004	0.00001	ND	ND	ND	ND	ND	ND
1,3-Dichlorobenzene	ND	0.2	NA	ND	ND	ND	ND	ND	ND
1,4-Dichlorobenzene	3.75E-03	0.8	0.000011	2.7E-04	3.E-06	8.6E-04	1.E-03	3.E-06	1.E-03
Bromodichloromethane	3.35E-05	NA	0.000037	2.5E-06	9.E-08	NA	NA	9.E-08	NA
Chlorobenzene	4.60E-05	0.05	NA	NA	NA	1.1E-05	2.E-04	NA	2.E-04
C5-C8 Aliphatic Hydrocarbons	4.60E-02	0.2	NA	NA	NA	1.1E-02	5.E-02	NA	5.E-02
C9-C12 Aliphatic Hydrocarbons	3.20E-02	0.2	NA	NA	NA	7.3E-03	4.E-02	NA	4.E-02
C9-C10 Aromatic Hydrocarbons	ND	0.05	NA	ND	ND	ND	ND	ND	ND
Total					3.E-05		5.E-01	3.E-05	5.E-01

NA - Not available
NC - Not calculated
ND - Not detected

Exposure and Risk Estimates Associated With Inhalation of Volatile Compounds in Air
UniFirst Corporation
15 Olympia Avenue, Woburn, MA
Commercial/Industrial Worker - Short Term
Indoor Air
Volatilization from Indoor Air
Warehouse
IA-07

Receptor:	Commercial/Industrial Worker - Short
Medium of Origin:	Indoor Air
Exposure Medium:	Indoor Air
Exposure Area:	Warehouse
Depth:	NA
Duration:	NA

$$C_{air} = \frac{C_{source}}{AF}$$

$$EC_{inh} = \frac{C_{air} \times ET \times EF \times ED}{AT}$$

$$HI_{inh} = \frac{EC_{inh}}{RfC}$$

$$Risk = EC_{inh} \times URF \times CF$$

Parameter	Definition	Units	Value	Comment
ET	Indoor Air Exposure Time	hrs/d	8	
EF	Indoor Air Exposure Frequency	ds/y	250	
ED	Indoor Air Exposure Duration	y	5	
ATc	Indoor Air Averaging Time - Cancer	hrs	683280	
ATn	Indoor Air Averaging Time - Non-Cancer	hrs	43800	
CF	Conversion Factor	ug/mg	1000	

Compound	EPC Indoor Air (mg/m3)	RfC (mg/m3)	URF 1/(ug/m3)	ADE-c mg/m3	Riskinh	ADE-nc mg/m3	HIinh	Risk (Indoor Air)	HI (Indoor Air)
Chloroform	1.51E-04	0.098	0.000023	2.2E-06	5.E-08	3.4E-05	4.E-04	5.E-08	4.E-04
1,1-Dichloroethane	4.05E-05	NA	0.0000016	5.9E-07	9.E-10	NA	NA	9.E-10	NA
1,2-Dichloroethane	6.63E-04	2.4	0.000026	9.7E-06	3.E-07	1.5E-04	6.E-05	3.E-07	6.E-05
1,1-Dichloroethene	3.95E-05	0.2	NA	NA	NA	9.0E-06	5.E-05	NA	5.E-05
Tetrachloroethene	2.99E-02	0.27	0.0000059	4.4E-04	3.E-06	6.8E-03	3.E-02	3.E-06	3.E-02
Trichloroethene	3.22E-04	NA	0.000002	4.7E-06	9.E-09	NA	NA	9.E-09	NA
Vinyl chloride	ND	0.1	0.0000044	ND	ND	ND	ND	ND	ND
trans-1,2-Dichloroethene	3.95E-05	0.06	NA	NA	NA	9.0E-06	2.E-04	NA	2.E-04
cis-1,2-Dichloroethene	1.11E-04	0.035	NA	NA	NA	2.5E-05	7.E-04	NA	7.E-04
1,1,1-Trichloroethane	4.91E-04	5	NA	NA	NA	1.1E-04	2.E-05	NA	2.E-05
Methylene chloride	1.74E-03	1	0.00000047	2.5E-05	1.E-08	4.0E-04	4.E-04	1.E-08	4.E-04
Carbon tetrachloride	4.21E-04	0.1	0.000006	6.2E-06	4.E-08	9.6E-05	1.E-03	4.E-08	1.E-03
Xylenes	3.06E-03	0.1	NA	NA	NA	7.0E-04	7.E-03	NA	7.E-03
Toluene	1.07E-02	5	NA	NA	NA	2.4E-03	5.E-04	NA	5.E-04
1,2-Dibromoethane	ND	0.009	0.0006	ND	ND	ND	ND	ND	ND
Benzene	9.93E-04	0.03	0.0000078	1.5E-05	1.E-07	2.3E-04	8.E-03	1.E-07	8.E-03
Bromoform	ND	NA	0.0000011	ND	ND	ND	ND	ND	ND
Ethylbenzene	8.20E-04	1	0.0000025	1.2E-05	3.E-08	1.9E-04	2.E-04	3.E-08	2.E-04
IsoPropylbenzene	ND	0.4	NA	ND	ND	ND	ND	ND	ND
trans-1,3-Dichloropropene	ND	0.02	0.000004	ND	ND	ND	ND	ND	ND
Naphthalene	4.30E-03	0.003	0.000034	6.3E-05	2.E-06	9.8E-04	3.E-01	2.E-06	3.E-01
1,3-Butadiene	6.20E-05	0.002	0.00003	9.1E-07	3.E-08	1.4E-05	7.E-03	3.E-08	7.E-03
Methyl tert-butyl ether	1.98E-04	3	0.00000026	2.9E-06	8.E-10	4.5E-05	2.E-05	8.E-10	2.E-05
1,1,2-Trichloroethane	ND	NA	0.000016	ND	ND	ND	ND	ND	ND
1,2,4-Trimethylbenzene	9.58E-04	0.007	NA	NA	NA	2.2E-04	3.E-02	NA	3.E-02
1,2-Dichloropropane	ND	0.004	0.00001	ND	ND	ND	ND	ND	ND
1,3-Dichlorobenzene	ND	0.2	NA	ND	ND	ND	ND	ND	ND
1,4-Dichlorobenzene	3.75E-03	0.8	0.000011	5.5E-05	6.E-07	8.6E-04	1.E-03	6.E-07	1.E-03
Bromodichloromethane	3.35E-05	NA	0.000037	4.9E-07	2.E-08	NA	NA	2.E-08	NA
Chlorobenzene	4.60E-05	0.05	NA	NA	NA	1.1E-05	2.E-04	NA	2.E-04
C5-C8 Aliphatic Hydrocarbons	4.60E-02	0.2	NA	NA	NA	1.1E-02	5.E-02	NA	5.E-02
C9-C12 Aliphatic Hydrocarbons	3.20E-02	0.2	NA	NA	NA	7.3E-03	4.E-02	NA	4.E-02
C9-C10 Aromatic Hydrocarbons	ND	0.05	NA	ND	ND	ND	ND	ND	ND
Total					6.E-06		5.E-01	6.E-06	5.E-01

NA - Not available
NC - Not calculated
ND - Not detected

Exposure and Risk Estimates Associated With Inhalation of Volatile Compounds in Air
UniFirst Corporation
15 Olympia Avenue, Woburn, MA
Resident - Long Term
Indoor Air
Volatilization from Indoor Air
Warehouse
IA-07

Receptor:	Resident - Long Term
Medium of Origin:	Indoor Air
Exposure Medium:	Indoor Air
Exposure Area:	Warehouse
Depth:	NA
Duration:	NA

$$C_{air} = \frac{C_{source}}{AF}$$

$$EC_{inh} = \frac{C_{air} \times ET \times EF \times ED}{AT}$$

$$HI_{inh} = \frac{EC_{inh}}{RfC}$$

$$Risk = EC_{inh} \times URF \times CF$$

Parameter	Definition	Units	Value	Comment
ET	Indoor Air Exposure Time	hrs/d	24	
EF	Indoor Air Exposure Frequency	ds/y	350	
ED	Indoor Air Exposure Duration	y	30	
ATc	Indoor Air Averaging Time - Cancer	hrs	683280	
ATn	Indoor Air Averaging Time - Non-Cancer	hrs	262800	
CF	Conversion Factor	ug/mg	1000	

Compound	EPC Indoor Air (mg/m3)	RfC (mg/m3)	URF 1/(ug/m3)	ADE-c mg/m3	Riskinh	ADE-nc mg/m3	HIinh	Risk (Indoor Air)	HI (Indoor Air)
Chloroform	1.51E-04	0.098	0.000023	5.6E-05	1.E-06	1.4E-04	1.E-03	1.E-06	1.E-03
1,1-Dichloroethane	4.05E-05	NA	0.0000016	1.5E-05	2.E-08	NA	NA	2.E-08	NA
1,2-Dichloroethane	6.63E-04	2.4	0.000026	2.4E-04	6.E-06	6.4E-04	3.E-04	6.E-06	3.E-04
1,1-Dichloroethene	3.95E-05	0.2	NA	NA	NA	3.8E-05	2.E-04	NA	2.E-04
Tetrachloroethene	2.99E-02	0.27	0.0000059	1.1E-02	7.E-05	2.9E-02	1.E-01	7.E-05	1.E-01
Trichloroethene	3.22E-04	NA	0.000002	1.2E-04	2.E-07	NA	NA	2.E-07	NA
Vinyl chloride	ND	0.1	0.0000044	ND	ND	ND	ND	ND	ND
trans-1,2-Dichloroethene	3.95E-05	0.06	NA	NA	NA	3.8E-05	6.E-04	NA	6.E-04
cis-1,2-Dichloroethene	1.11E-04	0.035	NA	NA	NA	1.1E-04	3.E-03	NA	3.E-03
1,1,1-Trichloroethane	4.91E-04	5	NA	NA	NA	4.7E-04	9.E-05	NA	9.E-05
Methylene chloride	1.74E-03	1	0.00000047	6.4E-04	3.E-07	1.7E-03	2.E-03	3.E-07	2.E-03
Carbon tetrachloride	4.21E-04	0.1	0.000006	1.6E-04	9.E-07	4.0E-04	4.E-03	9.E-07	4.E-03
Xylenes	3.06E-03	0.1	NA	NA	NA	2.9E-03	3.E-02	NA	3.E-02
Toluene	1.07E-02	5	NA	NA	NA	1.0E-02	2.E-03	NA	2.E-03
1,2-Dibromoethane	ND	0.009	0.0006	ND	ND	ND	ND	ND	ND
Benzene	9.93E-04	0.03	0.0000078	3.7E-04	3.E-06	9.5E-04	3.E-02	3.E-06	3.E-02
Bromoform	ND	NA	0.0000011	ND	ND	ND	ND	ND	ND
Ethylbenzene	8.20E-04	1	0.0000025	3.0E-04	8.E-07	7.9E-04	8.E-04	8.E-07	8.E-04
IsoPropylbenzene	ND	0.4	NA	ND	ND	ND	ND	ND	ND
trans-1,3-Dichloropropene	ND	0.02	0.000004	ND	ND	ND	ND	ND	ND
Naphthalene	4.30E-03	0.003	0.000034	1.6E-03	5.E-05	4.1E-03	1.E+00	5.E-05	1.E+00
1,3-Butadiene	6.20E-05	0.002	0.00003	2.3E-05	7.E-07	5.9E-05	3.E-02	7.E-07	3.E-02
Methyl tert-butyl ether	1.98E-04	3	0.00000026	7.3E-05	2.E-08	1.9E-04	6.E-05	2.E-08	6.E-05
1,1,2-Trichloroethane	ND	NA	0.000016	ND	ND	ND	ND	ND	ND
1,2,4-Trimethylbenzene	9.58E-04	0.007	NA	NA	NA	9.2E-04	1.E-01	NA	1.E-01
1,2-Dichloropropane	ND	0.004	0.00001	ND	ND	ND	ND	ND	ND
1,3-Dichlorobenzene	ND	0.2	NA	ND	ND	ND	ND	ND	ND
1,4-Dichlorobenzene	3.75E-03	0.8	0.000011	1.4E-03	2.E-05	3.6E-03	4.E-03	2.E-05	4.E-03
Bromodichloromethane	3.35E-05	NA	0.000037	1.2E-05	5.E-07	NA	NA	5.E-07	NA
Chlorobenzene	4.60E-05	0.05	NA	NA	NA	4.4E-05	9.E-04	NA	9.E-04
C5-C8 Aliphatic Hydrocarbons	4.60E-02	0.2	NA	NA	NA	4.4E-02	2.E-01	NA	2.E-01
C9-C12 Aliphatic Hydrocarbons	3.20E-02	0.2	NA	NA	NA	3.1E-02	2.E-01	NA	2.E-01
C9-C10 Aromatic Hydrocarbons	ND	0.05	NA	ND	ND	ND	ND	ND	ND
Total					1.E-04		2.E+00	1.E-04	2.E+00

NA - Not available
NC - Not calculated
ND - Not detected

Exposure and Risk Estimates Associated With Inhalation of Volatile Compounds in Air
UniFirst Corporation
15 Olympia Avenue, Woburn, MA
Commercial/Industrial Worker - Long Term
Indoor Air
Volatilization from Indoor Air
Office
IA-08

Receptor:	Commercial/Industrial Worker - Long
Medium of Origin:	Indoor Air
Exposure Medium:	Indoor Air
Exposure Area:	Office
Depth:	NA
Duration:	NA

$$C_{air} = \frac{C_{source}}{AF}$$

$$EC_{inh} = \frac{C_{air} \times ET \times EF \times ED}{AT}$$

$$HI_{inh} = \frac{EC_{inh}}{RfC}$$

$$Risk = EC_{inh} \times URF \times CF$$

Parameter	Definition	Units	Value	Comment
ET	Indoor Air Exposure Time	hrs/d	8	
EF	Indoor Air Exposure Frequency	ds/y	250	
ED	Indoor Air Exposure Duration	y	25	
ATc	Indoor Air Averaging Time - Cancer	hrs	683280	
ATn	Indoor Air Averaging Time - Non-Cancer	hrs	219000	
CF	Conversion Factor	ug/mg	1000	

Compound	EPC Indoor Air (mg/m3)	RfC (mg/m3)	URF 1/(ug/m3)	ADE-c mg/m3	Riskinh	ADE-nc mg/m3	HIinh	Risk (Indoor Air)	HI (Indoor Air)
Chloroform	2.20E-04	0.098	0.000023	1.6E-05	4.E-07	5.0E-05	5.E-04	4.E-07	5.E-04
1,1-Dichloroethane	4.05E-05	NA	0.0000016	3.0E-06	5.E-09	NA	NA	5.E-09	NA
1,2-Dichloroethane	4.81E-04	2.4	0.000026	3.5E-05	9.E-07	1.1E-04	5.E-05	9.E-07	5.E-05
1,1-Dichloroethene	3.95E-05	0.2	NA	NA	NA	9.0E-06	5.E-05	NA	5.E-05
Tetrachloroethene	1.53E-02	0.27	0.0000059	1.1E-03	7.E-06	3.5E-03	1.E-02	7.E-06	1.E-02
Trichloroethene	1.40E-04	NA	0.000002	1.0E-05	2.E-08	NA	NA	2.E-08	NA
Vinyl chloride	ND	0.1	0.0000044	ND	ND	ND	ND	ND	ND
trans-1,2-Dichloroethene	3.95E-05	0.06	NA	NA	NA	9.0E-06	2.E-04	NA	2.E-04
cis-1,2-Dichloroethene	3.95E-05	0.035	NA	NA	NA	9.0E-06	3.E-04	NA	3.E-04
1,1,1-Trichloroethane	2.29E-04	5	NA	NA	NA	5.2E-05	1.E-05	NA	1.E-05
Methylene chloride	8.70E-04	1	0.00000047	6.4E-05	3.E-08	2.0E-04	2.E-04	3.E-08	2.E-04
Carbon tetrachloride	4.90E-04	0.1	0.000006	3.6E-05	2.E-07	1.1E-04	1.E-03	2.E-07	1.E-03
Xylenes	5.37E-03	0.1	NA	NA	NA	1.2E-03	1.E-02	NA	1.E-02
Toluene	9.75E-03	5	NA	NA	NA	2.2E-03	4.E-04	NA	4.E-04
1,2-Dibromoethane	ND	0.009	0.0006	ND	ND	ND	ND	ND	ND
Benzene	1.11E-03	0.03	0.0000078	8.1E-05	6.E-07	2.5E-04	8.E-03	6.E-07	8.E-03
Bromoform	ND	NA	0.0000011	ND	ND	ND	ND	ND	ND
Ethylbenzene	1.53E-03	1	0.0000025	1.1E-04	3.E-07	3.5E-04	3.E-04	3.E-07	3.E-04
IsoPropylbenzene	ND	0.4	NA	ND	ND	ND	ND	ND	ND
trans-1,3-Dichloropropene	ND	0.02	0.000004	ND	ND	ND	ND	ND	ND
Naphthalene	1.93E-03	0.003	0.000034	1.4E-04	5.E-06	4.4E-04	1.E-01	5.E-06	1.E-01
1,3-Butadiene	5.50E-05	0.002	0.00003	4.0E-06	1.E-07	1.3E-05	6.E-03	1.E-07	6.E-03
Methyl tert-butyl ether	2.63E-04	3	0.00000026	1.9E-05	5.E-09	6.0E-05	2.E-05	5.E-09	2.E-05
1,1,2-Trichloroethane	ND	NA	0.000016	ND	ND	ND	ND	ND	ND
1,2,4-Trimethylbenzene	1.19E-03	0.007	NA	NA	NA	2.7E-04	4.E-02	NA	4.E-02
1,2-Dichloropropane	ND	0.004	0.00001	ND	ND	ND	ND	ND	ND
1,3-Dichlorobenzene	ND	0.2	NA	ND	ND	ND	ND	ND	ND
1,4-Dichlorobenzene	4.11E-03	0.8	0.000011	3.0E-04	3.E-06	9.4E-04	1.E-03	3.E-06	1.E-03
Bromodichloromethane	3.35E-05	NA	0.000037	2.5E-06	9.E-08	NA	NA	9.E-08	NA
Chlorobenzene	4.60E-05	0.05	NA	NA	NA	1.1E-05	2.E-04	NA	2.E-04
C5-C8 Aliphatic Hydrocarbons	8.70E-02	0.2	NA	NA	NA	2.0E-02	1.E-01	NA	1.E-01
C9-C12 Aliphatic Hydrocarbons	6.90E-02	0.2	NA	NA	NA	1.6E-02	8.E-02	NA	8.E-02
C9-C10 Aromatic Hydrocarbons	ND	0.05	NA	ND	ND	ND	ND	ND	ND
Total					2.E-05		4.E-01	2.E-05	4.E-01

NA - Not available
NC - Not calculated
ND - Not detected

Exposure and Risk Estimates Associated With Inhalation of Volatile Compounds in Air
UniFirst Corporation
15 Olympia Avenue, Woburn, MA
Commercial/Industrial Worker - Short Term
Indoor Air
Volatilization from Indoor Air
Office
IA-08

Receptor:	Commercial/Industrial Worker - Short
Medium of Origin:	Indoor Air
Exposure Medium:	Indoor Air
Exposure Area:	Office
Depth:	NA
Duration:	NA

$$C_{air} = \frac{C_{source}}{AF}$$

$$EC_{inh} = \frac{C_{air} \times ET \times EF \times ED}{AT}$$

$$HI_{inh} = \frac{EC_{inh}}{RfC}$$

$$Risk = EC_{inh} \times URF \times CF$$

Parameter	Definition	Units	Value	Comment
ET	Indoor Air Exposure Time	hrs/d	8	
EF	Indoor Air Exposure Frequency	ds/y	250	
ED	Indoor Air Exposure Duration	y	5	
ATc	Indoor Air Averaging Time - Cancer	hrs	683280	
ATn	Indoor Air Averaging Time - Non-Cancer	hrs	43800	
CF	Conversion Factor	ug/mg	1000	

Compound	EPC Indoor Air (mg/m3)	RfC (mg/m3)	URF 1/(ug/m3)	ADE-c mg/m3	Riskinh	ADE-nc mg/m3	HIinh	Risk (Indoor Air)	HI (Indoor Air)
Chloroform	2.20E-04	0.098	0.000023	3.2E-06	7.E-08	5.0E-05	5.E-04	7.E-08	5.E-04
1,1-Dichloroethane	4.05E-05	NA	0.0000016	5.9E-07	9.E-10	NA	NA	9.E-10	NA
1,2-Dichloroethane	4.81E-04	2.4	0.000026	7.0E-06	2.E-07	1.1E-04	5.E-05	2.E-07	5.E-05
1,1-Dichloroethene	3.95E-05	0.2	NA	NA	NA	9.0E-06	5.E-05	NA	5.E-05
Tetrachloroethene	1.53E-02	0.27	0.0000059	2.2E-04	1.E-06	3.5E-03	1.E-02	1.E-06	1.E-02
Trichloroethene	1.40E-04	NA	0.000002	2.0E-06	4.E-09	NA	NA	4.E-09	NA
Vinyl chloride	ND	0.1	0.0000044	ND	ND	ND	ND	ND	ND
trans-1,2-Dichloroethene	3.95E-05	0.06	NA	NA	NA	9.0E-06	2.E-04	NA	2.E-04
cis-1,2-Dichloroethene	3.95E-05	0.035	NA	NA	NA	9.0E-06	3.E-04	NA	3.E-04
1,1,1-Trichloroethane	2.29E-04	5	NA	NA	NA	5.2E-05	1.E-05	NA	1.E-05
Methylene chloride	8.70E-04	1	0.00000047	1.3E-05	6.E-09	2.0E-04	2.E-04	6.E-09	2.E-04
Carbon tetrachloride	4.90E-04	0.1	0.000006	7.2E-06	4.E-08	1.1E-04	1.E-03	4.E-08	1.E-03
Xylenes	5.37E-03	0.1	NA	NA	NA	1.2E-03	1.E-02	NA	1.E-02
Toluene	9.75E-03	5	NA	NA	NA	2.2E-03	4.E-04	NA	4.E-04
1,2-Dibromoethane	ND	0.009	0.0006	ND	ND	ND	ND	ND	ND
Benzene	1.11E-03	0.03	0.0000078	1.6E-05	1.E-07	2.5E-04	8.E-03	1.E-07	8.E-03
Bromoform	ND	NA	0.0000011	ND	ND	ND	ND	ND	ND
Ethylbenzene	1.53E-03	1	0.0000025	2.2E-05	6.E-08	3.5E-04	3.E-04	6.E-08	3.E-04
IsoPropylbenzene	ND	0.4	NA	ND	ND	ND	ND	ND	ND
trans-1,3-Dichloropropene	ND	0.02	0.000004	ND	ND	ND	ND	ND	ND
Naphthalene	1.93E-03	0.003	0.000034	2.8E-05	1.E-06	4.4E-04	1.E-01	1.E-06	1.E-01
1,3-Butadiene	5.50E-05	0.002	0.00003	8.0E-07	2.E-08	1.3E-05	6.E-03	2.E-08	6.E-03
Methyl tert-butyl ether	2.63E-04	3	0.00000026	3.8E-06	1.E-09	6.0E-05	2.E-05	1.E-09	2.E-05
1,1,2-Trichloroethane	ND	NA	0.000016	ND	ND	ND	ND	ND	ND
1,2,4-Trimethylbenzene	1.19E-03	0.007	NA	NA	NA	2.7E-04	4.E-02	NA	4.E-02
1,2-Dichloropropane	ND	0.004	0.00001	ND	ND	ND	ND	ND	ND
1,3-Dichlorobenzene	ND	0.2	NA	ND	ND	ND	ND	ND	ND
1,4-Dichlorobenzene	4.11E-03	0.8	0.000011	6.0E-05	7.E-07	9.4E-04	1.E-03	7.E-07	1.E-03
Bromodichloromethane	3.35E-05	NA	0.000037	4.9E-07	2.E-08	NA	NA	2.E-08	NA
Chlorobenzene	4.60E-05	0.05	NA	NA	NA	1.1E-05	2.E-04	NA	2.E-04
C5-C8 Aliphatic Hydrocarbons	8.70E-02	0.2	NA	NA	NA	2.0E-02	1.E-01	NA	1.E-01
C9-C12 Aliphatic Hydrocarbons	6.90E-02	0.2	NA	NA	NA	1.6E-02	8.E-02	NA	8.E-02
C9-C10 Aromatic Hydrocarbons	ND	0.05	NA	ND	ND	ND	ND	ND	ND
Total					3.E-06		4.E-01	3.E-06	4.E-01

NA - Not available
NC - Not calculated
ND - Not detected

Exposure and Risk Estimates Associated With Inhalation of Volatile Compounds in Air
UniFirst Corporation
15 Olympia Avenue, Woburn, MA
Resident - Long Term
Indoor Air
Volatilization from Indoor Air
Office
IA-08

Receptor:	Resident - Long Term
Medium of Origin:	Indoor Air
Exposure Medium:	Indoor Air
Exposure Area:	Office
Depth:	NA
Duration:	NA

$$C_{air} = \frac{C_{source}}{AF}$$

$$EC_{inh} = \frac{C_{air} \times ET \times EF \times ED}{AT}$$

$$HI_{inh} = \frac{EC_{inh}}{RfC}$$

$$Risk = EC_{inh} \times URF \times CF$$

Parameter	Definition	Units	Value	Comment
ET	Indoor Air Exposure Time	hrs/d	24	
EF	Indoor Air Exposure Frequency	ds/y	350	
ED	Indoor Air Exposure Duration	y	30	
ATc	Indoor Air Averaging Time - Cancer	hrs	683280	
ATn	Indoor Air Averaging Time - Non-Cancer	hrs	262800	
CF	Conversion Factor	ug/mg	1000	

Compound	EPC Indoor Air (mg/m3)	RfC (mg/m3)	URF 1/(ug/m3)	ADE-c mg/m3	Riskinh	ADE-nc mg/m3	HIinh	Risk (Indoor Air)	HI (Indoor Air)
Chloroform	2.20E-04	0.098	0.000023	8.1E-05	2.E-06	2.1E-04	2.E-03	2.E-06	2.E-03
1,1-Dichloroethane	4.05E-05	NA	0.0000016	1.5E-05	2.E-08	NA	NA	2.E-08	NA
1,2-Dichloroethane	4.81E-04	2.4	0.000026	1.8E-04	5.E-06	4.6E-04	2.E-04	5.E-06	2.E-04
1,1-Dichloroethene	3.95E-05	0.2	NA	NA	NA	3.8E-05	2.E-04	NA	2.E-04
Tetrachloroethene	1.53E-02	0.27	0.0000059	5.6E-03	3.E-05	1.5E-02	5.E-02	3.E-05	5.E-02
Trichloroethene	1.40E-04	NA	0.000002	5.2E-05	1.E-07	NA	NA	1.E-07	NA
Vinyl chloride	ND	0.1	0.0000044	ND	ND	ND	ND	ND	ND
trans-1,2-Dichloroethene	3.95E-05	0.06	NA	NA	NA	3.8E-05	6.E-04	NA	6.E-04
cis-1,2-Dichloroethene	3.95E-05	0.035	NA	NA	NA	3.8E-05	1.E-03	NA	1.E-03
1,1,1-Trichloroethane	2.29E-04	5	NA	NA	NA	2.2E-04	4.E-05	NA	4.E-05
Methylene chloride	8.70E-04	1	0.00000047	3.2E-04	2.E-07	8.3E-04	8.E-04	2.E-07	8.E-04
Carbon tetrachloride	4.90E-04	0.1	0.000006	1.8E-04	1.E-06	4.7E-04	5.E-03	1.E-06	5.E-03
Xylenes	5.37E-03	0.1	NA	NA	NA	5.1E-03	5.E-02	NA	5.E-02
Toluene	9.75E-03	5	NA	NA	NA	9.3E-03	2.E-03	NA	2.E-03
1,2-Dibromoethane	ND	0.009	0.0006	ND	ND	ND	ND	ND	ND
Benzene	1.11E-03	0.03	0.0000078	4.1E-04	3.E-06	1.1E-03	4.E-02	3.E-06	4.E-02
Bromoform	ND	NA	0.0000011	ND	ND	ND	ND	ND	ND
Ethylbenzene	1.53E-03	1	0.0000025	5.6E-04	1.E-06	1.5E-03	1.E-03	1.E-06	1.E-03
IsoPropylbenzene	ND	0.4	NA	ND	ND	ND	ND	ND	ND
trans-1,3-Dichloropropene	ND	0.02	0.000004	ND	ND	ND	ND	ND	ND
Naphthalene	1.93E-03	0.003	0.000034	7.1E-04	2.E-05	1.9E-03	6.E-01	2.E-05	6.E-01
1,3-Butadiene	5.50E-05	0.002	0.00003	2.0E-05	6.E-07	5.3E-05	3.E-02	6.E-07	3.E-02
Methyl tert-butyl ether	2.63E-04	3	0.00000026	9.7E-05	3.E-08	2.5E-04	8.E-05	3.E-08	8.E-05
1,1,2-Trichloroethane	ND	NA	0.000016	ND	ND	ND	ND	ND	ND
1,2,4-Trimethylbenzene	1.19E-03	0.007	NA	NA	NA	1.1E-03	2.E-01	NA	2.E-01
1,2-Dichloropropane	ND	0.004	0.00001	ND	ND	ND	ND	ND	ND
1,3-Dichlorobenzene	ND	0.2	NA	ND	ND	ND	ND	ND	ND
1,4-Dichlorobenzene	4.11E-03	0.8	0.000011	1.5E-03	2.E-05	3.9E-03	5.E-03	2.E-05	5.E-03
Bromodichloromethane	3.35E-05	NA	0.000037	1.2E-05	5.E-07	NA	NA	5.E-07	NA
Chlorobenzene	4.60E-05	0.05	NA	NA	NA	4.4E-05	9.E-04	NA	9.E-04
C5-C8 Aliphatic Hydrocarbons	8.70E-02	0.2	NA	NA	NA	8.3E-02	4.E-01	NA	4.E-01
C9-C12 Aliphatic Hydrocarbons	6.90E-02	0.2	NA	NA	NA	6.6E-02	3.E-01	NA	3.E-01
C9-C10 Aromatic Hydrocarbons	ND	0.05	NA	ND	ND	ND	ND	ND	ND
Total					9.E-05		2.E+00	9.E-05	2.E+00

NA - Not available
NC - Not calculated
ND - Not detected

Exposure and Risk Estimates Associated With Inhalation of Volatile Compounds in Air
UniFirst Corporation
15 Olympia Avenue, Woburn, MA
Storage User - Long Term - Warehouse
Indoor Air
Volatilization from Indoor Air
Warehouse
IA-09

Receptor:	Storage User - Long Term - Warehou
Medium of Origin:	Indoor Air
Exposure Medium:	Indoor Air
Exposure Area:	Warehouse
Depth:	NA
Duration:	NA

$$C_{air} = \frac{C_{source}}{AF}$$

$$EC_{inh} = \frac{C_{air} \times ET \times EF \times ED}{AT}$$

$$HI_{inh} = \frac{EC_{inh}}{RfC}$$

$$Risk = EC_{inh} \times URF \times CF$$

Parameter	Definition	Units	Value	Comment
ET	Indoor Air Exposure Time	hrs/d	3	
EF	Indoor Air Exposure Frequency	ds/y	250	
ED	Indoor Air Exposure Duration	y	25	
ATc	Indoor Air Averaging Time - Cancer	hrs	683280	
ATn	Indoor Air Averaging Time - Non-Cancer	hrs	219000	
CF	Conversion Factor	ug/mg	1000	

Compound	EPC Indoor Air (mg/m3)	RfC (mg/m3)	URF 1/(ug/m3)	ADE-c mg/m3	Riskinh	ADE-nc mg/m3	HIinh	Risk (Indoor Air)	HI (Indoor Air)
Chloroform	1.95E-04	0.098	0.000023	5.4E-06	1.E-07	1.7E-05	2.E-04	1.E-07	2.E-04
1,1-Dichloroethane	4.05E-05	NA	0.0000016	1.1E-06	2.E-09	NA	NA	2.E-09	NA
1,2-Dichloroethane	2.43E-04	2.4	0.000026	6.7E-06	2.E-07	2.1E-05	9.E-06	2.E-07	9.E-06
1,1-Dichloroethene	3.95E-05	0.2	NA	NA	NA	3.4E-06	2.E-05	NA	2.E-05
Tetrachloroethene	4.36E-03	0.27	0.0000059	1.2E-04	7.E-07	3.7E-04	1.E-03	7.E-07	1.E-03
Trichloroethene	1.13E-04	NA	0.000002	3.1E-06	6.E-09	NA	NA	6.E-09	NA
Vinyl chloride	ND	0.1	0.0000044	ND	ND	ND	ND	ND	ND
trans-1,2-Dichloroethene	3.95E-05	0.06	NA	NA	NA	3.4E-06	6.E-05	NA	6.E-05
cis-1,2-Dichloroethene	3.95E-05	0.035	NA	NA	NA	3.4E-06	1.E-04	NA	1.E-04
1,1,1-Trichloroethane	1.42E-04	5	NA	NA	NA	1.2E-05	2.E-06	NA	2.E-06
Methylene chloride	8.70E-04	1	0.00000047	2.4E-05	1.E-08	7.4E-05	7.E-05	1.E-08	7.E-05
Carbon tetrachloride	4.15E-04	0.1	0.000006	1.1E-05	7.E-08	3.6E-05	4.E-04	7.E-08	4.E-04
Xylenes	3.64E-03	0.1	NA	NA	NA	3.1E-04	3.E-03	NA	3.E-03
Toluene	8.46E-03	5	NA	NA	NA	7.2E-04	1.E-04	NA	1.E-04
1,2-Dibromoethane	ND	0.009	0.0006	ND	ND	ND	ND	ND	ND
Benzene	1.43E-03	0.03	0.0000078	3.9E-05	3.E-07	1.2E-04	4.E-03	3.E-07	4.E-03
Bromoform	ND	NA	0.0000011	ND	ND	ND	ND	ND	ND
Ethylbenzene	1.08E-03	1	0.0000025	3.0E-05	7.E-08	9.2E-05	9.E-05	7.E-08	9.E-05
IsoPropylbenzene	ND	0.4	NA	ND	ND	ND	ND	ND	ND
trans-1,3-Dichloropropene	ND	0.02	0.000004	ND	ND	ND	ND	ND	ND
Naphthalene	1.30E-04	0.003	0.000034	3.6E-06	1.E-07	1.1E-05	4.E-03	1.E-07	4.E-03
1,3-Butadiene	1.10E-04	0.002	0.00003	3.0E-06	9.E-08	9.4E-06	5.E-03	9.E-08	5.E-03
Methyl tert-butyl ether	1.02E-03	3	0.00000026	2.8E-05	7.E-09	8.7E-05	3.E-05	7.E-09	3.E-05
1,1,2-Trichloroethane	ND	NA	0.000016	ND	ND	ND	ND	ND	ND
1,2,4-Trimethylbenzene	4.13E-04	0.007	NA	NA	NA	3.5E-05	5.E-03	NA	5.E-03
1,2-Dichloropropane	ND	0.004	0.00001	ND	ND	ND	ND	ND	ND
1,3-Dichlorobenzene	ND	0.2	NA	ND	ND	ND	ND	ND	ND
1,4-Dichlorobenzene	3.78E-04	0.8	0.000011	1.0E-05	1.E-07	3.2E-05	4.E-05	1.E-07	4.E-05
Bromodichloromethane	3.35E-05	NA	0.000037	9.2E-07	3.E-08	NA	NA	3.E-08	NA
Chlorobenzene	4.60E-05	0.05	NA	NA	NA	3.9E-06	8.E-05	NA	8.E-05
C5-C8 Aliphatic Hydrocarbons	7.00E-02	0.2	NA	NA	NA	6.0E-03	3.E-02	NA	3.E-02
C9-C12 Aliphatic Hydrocarbons	7.00E-03	0.2	NA	NA	NA	6.0E-04	3.E-03	NA	3.E-03
C9-C10 Aromatic Hydrocarbons	ND	0.05	NA	ND	ND	ND	ND	ND	ND
Total					2.E-06		6.E-02	2.E-06	6.E-02

NA - Not available
NC - Not calculated
ND - Not detected

Exposure and Risk Estimates Associated With Inhalation of Volatile Compounds in Air
UniFirst Corporation
15 Olympia Avenue, Woburn, MA
Storage User - Short Term - Warehouse
Indoor Air
Volatilization from Indoor Air
Warehouse
IA-09

Receptor:	Storage User - Short Term - Warehou
Medium of Origin:	Indoor Air
Exposure Medium:	Indoor Air
Exposure Area:	Warehouse
Depth:	NA
Duration:	NA

$$C_{air} = \frac{C_{source}}{AF}$$

$$EC_{inh} = \frac{C_{air} \times ET \times EF \times ED}{AT}$$

$$HI_{inh} = \frac{EC_{inh}}{RfC}$$

$$Risk = EC_{inh} \times URF \times CF$$

Parameter	Definition	Units	Value	Comment
ET	Indoor Air Exposure Time	hrs/d	3	
EF	Indoor Air Exposure Frequency	ds/y	250	
ED	Indoor Air Exposure Duration	y	5	
ATc	Indoor Air Averaging Time - Cancer	hrs	683280	
ATn	Indoor Air Averaging Time - Non-Cancer	hrs	43800	
CF	Conversion Factor	ug/mg	1000	

Compound	EPC Indoor Air (mg/m3)	RfC (mg/m3)	URF 1/(ug/m3)	ADE-c mg/m3	Riskinh	ADE-nc mg/m3	HIinh	Risk (Indoor Air)	HI (Indoor Air)
Chloroform	1.95E-04	0.098	0.000023	1.1E-06	2.E-08	1.7E-05	2.E-04	2.E-08	2.E-04
1,1-Dichloroethane	4.05E-05	NA	0.0000016	2.2E-07	4.E-10	NA	NA	4.E-10	NA
1,2-Dichloroethane	2.43E-04	2.4	0.000026	1.3E-06	3.E-08	2.1E-05	9.E-06	3.E-08	9.E-06
1,1-Dichloroethene	3.95E-05	0.2	NA	NA	NA	3.4E-06	2.E-05	NA	2.E-05
Tetrachloroethene	4.36E-03	0.27	0.0000059	2.4E-05	1.E-07	3.7E-04	1.E-03	1.E-07	1.E-03
Trichloroethene	1.13E-04	NA	0.000002	6.2E-07	1.E-09	NA	NA	1.E-09	NA
Vinyl chloride	ND	0.1	0.0000044	ND	ND	ND	ND	ND	ND
trans-1,2-Dichloroethene	3.95E-05	0.06	NA	NA	NA	3.4E-06	6.E-05	NA	6.E-05
cis-1,2-Dichloroethene	3.95E-05	0.035	NA	NA	NA	3.4E-06	1.E-04	NA	1.E-04
1,1,1-Trichloroethane	1.42E-04	5	NA	NA	NA	1.2E-05	2.E-06	NA	2.E-06
Methylene chloride	8.70E-04	1	0.00000047	4.8E-06	2.E-09	7.4E-05	7.E-05	2.E-09	7.E-05
Carbon tetrachloride	4.15E-04	0.1	0.000006	2.3E-06	1.E-08	3.6E-05	4.E-04	1.E-08	4.E-04
Xylenes	3.64E-03	0.1	NA	NA	NA	3.1E-04	3.E-03	NA	3.E-03
Toluene	8.46E-03	5	NA	NA	NA	7.2E-04	1.E-04	NA	1.E-04
1,2-Dibromoethane	ND	0.009	0.0006	ND	ND	ND	ND	ND	ND
Benzene	1.43E-03	0.03	0.0000078	7.8E-06	6.E-08	1.2E-04	4.E-03	6.E-08	4.E-03
Bromoform	ND	NA	0.0000011	ND	ND	ND	ND	ND	ND
Ethylbenzene	1.08E-03	1	0.0000025	5.9E-06	1.E-08	9.2E-05	9.E-05	1.E-08	9.E-05
IsoPropylbenzene	ND	0.4	NA	ND	ND	ND	ND	ND	ND
trans-1,3-Dichloropropene	ND	0.02	0.000004	ND	ND	ND	ND	ND	ND
Naphthalene	1.30E-04	0.003	0.000034	7.1E-07	2.E-08	1.1E-05	4.E-03	2.E-08	4.E-03
1,3-Butadiene	1.10E-04	0.002	0.00003	6.0E-07	2.E-08	9.4E-06	5.E-03	2.E-08	5.E-03
Methyl tert-butyl ether	1.02E-03	3	0.00000026	5.6E-06	1.E-09	8.7E-05	3.E-05	1.E-09	3.E-05
1,1,2-Trichloroethane	ND	NA	0.000016	ND	ND	ND	ND	ND	ND
1,2,4-Trimethylbenzene	4.13E-04	0.007	NA	NA	NA	3.5E-05	5.E-03	NA	5.E-03
1,2-Dichloropropane	ND	0.004	0.00001	ND	ND	ND	ND	ND	ND
1,3-Dichlorobenzene	ND	0.2	NA	ND	ND	ND	ND	ND	ND
1,4-Dichlorobenzene	3.78E-04	0.8	0.000011	2.1E-06	2.E-08	3.2E-05	4.E-05	2.E-08	4.E-05
Bromodichloromethane	3.35E-05	NA	0.000037	1.8E-07	7.E-09	NA	NA	7.E-09	NA
Chlorobenzene	4.60E-05	0.05	NA	NA	NA	3.9E-06	8.E-05	NA	8.E-05
C5-C8 Aliphatic Hydrocarbons	7.00E-02	0.2	NA	NA	NA	6.0E-03	3.E-02	NA	3.E-02
C9-C12 Aliphatic Hydrocarbons	7.00E-03	0.2	NA	NA	NA	6.0E-04	3.E-03	NA	3.E-03
C9-C10 Aromatic Hydrocarbons	ND	0.05	NA	ND	ND	ND	ND	ND	ND
Total					4.E-07		6.E-02	4.E-07	6.E-02

NA - Not available
NC - Not calculated
ND - Not detected

Exposure and Risk Estimates Associated With Inhalation of Volatile Compounds in Air
UniFirst Corporation
15 Olympia Avenue, Woburn, MA
Commercial/Industrial Worker - Long Term
Indoor Air
Volatilization from Indoor Air
Warehouse
IA-09

Receptor:	Commercial/Industrial Worker - Long
Medium of Origin:	Indoor Air
Exposure Medium:	Indoor Air
Exposure Area:	Warehouse
Depth:	NA
Duration:	NA

$$C_{air} = \frac{C_{source}}{AF}$$

$$EC_{inh} = \frac{C_{air} \times ET \times EF \times ED}{AT}$$

$$HI_{inh} = \frac{EC_{inh}}{RfC}$$

$$Risk = EC_{inh} \times URF \times CF$$

Parameter	Definition	Units	Value	Comment
ET	Indoor Air Exposure Time	hrs/d	8	
EF	Indoor Air Exposure Frequency	ds/y	250	
ED	Indoor Air Exposure Duration	y	25	
ATc	Indoor Air Averaging Time - Cancer	hrs	683280	
ATn	Indoor Air Averaging Time - Non-Cancer	hrs	219000	
CF	Conversion Factor	ug/mg	1000	

Compound	EPC Indoor Air (mg/m3)	RfC (mg/m3)	URF 1/(ug/m3)	ADE-c mg/m3	Riskinh	ADE-nc mg/m3	HIinh	Risk (Indoor Air)	HI (Indoor Air)
Chloroform	1.95E-04	0.098	0.000023	1.4E-05	3.E-07	4.5E-05	5.E-04	3.E-07	5.E-04
1,1-Dichloroethane	4.05E-05	NA	0.0000016	3.0E-06	5.E-09	NA	NA	5.E-09	NA
1,2-Dichloroethane	2.43E-04	2.4	0.000026	1.8E-05	5.E-07	5.5E-05	2.E-05	5.E-07	2.E-05
1,1-Dichloroethene	3.95E-05	0.2	NA	NA	NA	9.0E-06	5.E-05	NA	5.E-05
Tetrachloroethene	4.36E-03	0.27	0.0000059	3.2E-04	2.E-06	1.0E-03	4.E-03	2.E-06	4.E-03
Trichloroethene	1.13E-04	NA	0.000002	8.3E-06	2.E-08	NA	NA	2.E-08	NA
Vinyl chloride	ND	0.1	0.0000044	ND	ND	ND	ND	ND	ND
trans-1,2-Dichloroethene	3.95E-05	0.06	NA	NA	NA	9.0E-06	2.E-04	NA	2.E-04
cis-1,2-Dichloroethene	3.95E-05	0.035	NA	NA	NA	9.0E-06	3.E-04	NA	3.E-04
1,1,1-Trichloroethane	1.42E-04	5	NA	NA	NA	3.2E-05	6.E-06	NA	6.E-06
Methylene chloride	8.70E-04	1	0.00000047	6.4E-05	3.E-08	2.0E-04	2.E-04	3.E-08	2.E-04
Carbon tetrachloride	4.15E-04	0.1	0.000006	3.0E-05	2.E-07	9.5E-05	9.E-04	2.E-07	9.E-04
Xylenes	3.64E-03	0.1	NA	NA	NA	8.3E-04	8.E-03	NA	8.E-03
Toluene	8.46E-03	5	NA	NA	NA	1.9E-03	4.E-04	NA	4.E-04
1,2-Dibromoethane	ND	0.009	0.0006	ND	ND	ND	ND	ND	ND
Benzene	1.43E-03	0.03	0.0000078	1.0E-04	8.E-07	3.3E-04	1.E-02	8.E-07	1.E-02
Bromoform	ND	NA	0.0000011	ND	ND	ND	ND	ND	ND
Ethylbenzene	1.08E-03	1	0.0000025	7.9E-05	2.E-07	2.5E-04	2.E-04	2.E-07	2.E-04
IsoPropylbenzene	ND	0.4	NA	ND	ND	ND	ND	ND	ND
trans-1,3-Dichloropropene	ND	0.02	0.000004	ND	ND	ND	ND	ND	ND
Naphthalene	1.30E-04	0.003	0.000034	9.5E-06	3.E-07	3.0E-05	1.E-02	3.E-07	1.E-02
1,3-Butadiene	1.10E-04	0.002	0.00003	8.0E-06	2.E-07	2.5E-05	1.E-02	2.E-07	1.E-02
Methyl tert-butyl ether	1.02E-03	3	0.00000026	7.5E-05	2.E-08	2.3E-04	8.E-05	2.E-08	8.E-05
1,1,2-Trichloroethane	ND	NA	0.000016	ND	ND	ND	ND	ND	ND
1,2,4-Trimethylbenzene	4.13E-04	0.007	NA	NA	NA	9.4E-05	1.E-02	NA	1.E-02
1,2-Dichloropropane	ND	0.004	0.00001	ND	ND	ND	ND	ND	ND
1,3-Dichlorobenzene	ND	0.2	NA	ND	ND	ND	ND	ND	ND
1,4-Dichlorobenzene	3.78E-04	0.8	0.000011	2.8E-05	3.E-07	8.6E-05	1.E-04	3.E-07	1.E-04
Bromodichloromethane	3.35E-05	NA	0.000037	2.5E-06	9.E-08	NA	NA	9.E-08	NA
Chlorobenzene	4.60E-05	0.05	NA	NA	NA	1.1E-05	2.E-04	NA	2.E-04
C5-C8 Aliphatic Hydrocarbons	7.00E-02	0.2	NA	NA	NA	1.6E-02	8.E-02	NA	8.E-02
C9-C12 Aliphatic Hydrocarbons	7.00E-03	0.2	NA	NA	NA	1.6E-03	8.E-03	NA	8.E-03
C9-C10 Aromatic Hydrocarbons	ND	0.05	NA	ND	ND	ND	ND	ND	ND
Total					5.E-06		1.E-01	5.E-06	1.E-01

NA - Not available
NC - Not calculated
ND - Not detected

Exposure and Risk Estimates Associated With Inhalation of Volatile Compounds in Air
UniFirst Corporation
15 Olympia Avenue, Woburn, MA
Commercial/Industrial Worker - Short Term
Indoor Air
Volatilization from Indoor Air
Warehouse
IA-09

Receptor:	Commercial/Industrial Worker - Short
Medium of Origin:	Indoor Air
Exposure Medium:	Indoor Air
Exposure Area:	Warehouse
Depth:	NA
Duration:	NA

$$C_{air} = \frac{C_{source}}{AF}$$

$$EC_{inh} = \frac{C_{air} \times ET \times EF \times ED}{AT}$$

$$HI_{inh} = \frac{EC_{inh}}{RfC}$$

$$Risk = EC_{inh} \times URF \times CF$$

Parameter	Definition	Units	Value	Comment
ET	Indoor Air Exposure Time	hrs/d	8	
EF	Indoor Air Exposure Frequency	ds/y	250	
ED	Indoor Air Exposure Duration	y	5	
ATc	Indoor Air Averaging Time - Cancer	hrs	683280	
ATn	Indoor Air Averaging Time - Non-Cancer	hrs	43800	
CF	Conversion Factor	ug/mg	1000	

Compound	EPC Indoor Air (mg/m3)	RfC (mg/m3)	URF 1/(ug/m3)	ADE-c mg/m3	Riskinh	ADE-nc mg/m3	HIinh	Risk (Indoor Air)	HI (Indoor Air)
Chloroform	1.95E-04	0.098	0.000023	2.9E-06	7.E-08	4.5E-05	5.E-04	7.E-08	5.E-04
1,1-Dichloroethane	4.05E-05	NA	0.0000016	5.9E-07	9.E-10	NA	NA	9.E-10	NA
1,2-Dichloroethane	2.43E-04	2.4	0.000026	3.6E-06	9.E-08	5.5E-05	2.E-05	9.E-08	2.E-05
1,1-Dichloroethene	3.95E-05	0.2	NA	NA	NA	9.0E-06	5.E-05	NA	5.E-05
Tetrachloroethene	4.36E-03	0.27	0.0000059	6.4E-05	4.E-07	1.0E-03	4.E-03	4.E-07	4.E-03
Trichloroethene	1.13E-04	NA	0.000002	1.7E-06	3.E-09	NA	NA	3.E-09	NA
Vinyl chloride	ND	0.1	0.0000044	ND	ND	ND	ND	ND	ND
trans-1,2-Dichloroethene	3.95E-05	0.06	NA	NA	NA	9.0E-06	2.E-04	NA	2.E-04
cis-1,2-Dichloroethene	3.95E-05	0.035	NA	NA	NA	9.0E-06	3.E-04	NA	3.E-04
1,1,1-Trichloroethane	1.42E-04	5	NA	NA	NA	3.2E-05	6.E-06	NA	6.E-06
Methylene chloride	8.70E-04	1	0.00000047	1.3E-05	6.E-09	2.0E-04	2.E-04	6.E-09	2.E-04
Carbon tetrachloride	4.15E-04	0.1	0.000006	6.1E-06	4.E-08	9.5E-05	9.E-04	4.E-08	9.E-04
Xylenes	3.64E-03	0.1	NA	NA	NA	8.3E-04	8.E-03	NA	8.E-03
Toluene	8.46E-03	5	NA	NA	NA	1.9E-03	4.E-04	NA	4.E-04
1,2-Dibromoethane	ND	0.009	0.0006	ND	ND	ND	ND	ND	ND
Benzene	1.43E-03	0.03	0.0000078	2.1E-05	2.E-07	3.3E-04	1.E-02	2.E-07	1.E-02
Bromoform	ND	NA	0.0000011	ND	ND	ND	ND	ND	ND
Ethylbenzene	1.08E-03	1	0.0000025	1.6E-05	4.E-08	2.5E-04	2.E-04	4.E-08	2.E-04
IsoPropylbenzene	ND	0.4	NA	ND	ND	ND	ND	ND	ND
trans-1,3-Dichloropropene	ND	0.02	0.000004	ND	ND	ND	ND	ND	ND
Naphthalene	1.30E-04	0.003	0.000034	1.9E-06	6.E-08	3.0E-05	1.E-02	6.E-08	1.E-02
1,3-Butadiene	1.10E-04	0.002	0.00003	1.6E-06	5.E-08	2.5E-05	1.E-02	5.E-08	1.E-02
Methyl tert-butyl ether	1.02E-03	3	0.00000026	1.5E-05	4.E-09	2.3E-04	8.E-05	4.E-09	8.E-05
1,1,2-Trichloroethane	ND	NA	0.000016	ND	ND	ND	ND	ND	ND
1,2,4-Trimethylbenzene	4.13E-04	0.007	NA	NA	NA	9.4E-05	1.E-02	NA	1.E-02
1,2-Dichloropropane	ND	0.004	0.00001	ND	ND	ND	ND	ND	ND
1,3-Dichlorobenzene	ND	0.2	NA	ND	ND	ND	ND	ND	ND
1,4-Dichlorobenzene	3.78E-04	0.8	0.000011	5.5E-06	6.E-08	8.6E-05	1.E-04	6.E-08	1.E-04
Bromodichloromethane	3.35E-05	NA	0.000037	4.9E-07	2.E-08	NA	NA	2.E-08	NA
Chlorobenzene	4.60E-05	0.05	NA	NA	NA	1.1E-05	2.E-04	NA	2.E-04
C5-C8 Aliphatic Hydrocarbons	7.00E-02	0.2	NA	NA	NA	1.6E-02	8.E-02	NA	8.E-02
C9-C12 Aliphatic Hydrocarbons	7.00E-03	0.2	NA	NA	NA	1.6E-03	8.E-03	NA	8.E-03
C9-C10 Aromatic Hydrocarbons	ND	0.05	NA	ND	ND	ND	ND	ND	ND
Total					1.E-06		1.E-01	1.E-06	1.E-01

NA - Not available
NC - Not calculated
ND - Not detected

Exposure and Risk Estimates Associated With Inhalation of Volatile Compounds in Air
UniFirst Corporation
15 Olympia Avenue, Woburn, MA
Resident - Long Term
Indoor Air
Volatilization from Indoor Air
Warehouse
IA-09

Receptor:	Resident - Long Term
Medium of Origin:	Indoor Air
Exposure Medium:	Indoor Air
Exposure Area:	Warehouse
Depth:	NA
Duration:	NA

$$C_{air} = \frac{C_{source}}{AF}$$

$$EC_{inh} = \frac{C_{air} \times ET \times EF \times ED}{AT}$$

$$HI_{inh} = \frac{EC_{inh}}{RfC}$$

$$Risk = EC_{inh} \times URF \times CF$$

Parameter	Definition	Units	Value	Comment
ET	Indoor Air Exposure Time	hrs/d	24	
EF	Indoor Air Exposure Frequency	ds/y	350	
ED	Indoor Air Exposure Duration	y	30	
ATc	Indoor Air Averaging Time - Cancer	hrs	683280	
ATn	Indoor Air Averaging Time - Non-Cancer	hrs	262800	
CF	Conversion Factor	ug/mg	1000	

Compound	EPC Indoor Air (mg/m3)	RfC (mg/m3)	URF 1/(ug/m3)	ADE-c mg/m3	Riskinh	ADE-nc mg/m3	HIinh	Risk (Indoor Air)	HI (Indoor Air)
Chloroform	1.95E-04	0.098	0.000023	7.2E-05	2.E-06	1.9E-04	2.E-03	2.E-06	2.E-03
1,1-Dichloroethane	4.05E-05	NA	0.0000016	1.5E-05	2.E-08	NA	NA	2.E-08	NA
1,2-Dichloroethane	2.43E-04	2.4	0.000026	9.0E-05	2.E-06	2.3E-04	1.E-04	2.E-06	1.E-04
1,1-Dichloroethene	3.95E-05	0.2	NA	NA	NA	3.8E-05	2.E-04	NA	2.E-04
Tetrachloroethene	4.36E-03	0.27	0.0000059	1.6E-03	9.E-06	4.2E-03	2.E-02	9.E-06	2.E-02
Trichloroethene	1.13E-04	NA	0.000002	4.2E-05	8.E-08	NA	NA	8.E-08	NA
Vinyl chloride	ND	0.1	0.0000044	ND	ND	ND	ND	ND	ND
trans-1,2-Dichloroethene	3.95E-05	0.06	NA	NA	NA	3.8E-05	6.E-04	NA	6.E-04
cis-1,2-Dichloroethene	3.95E-05	0.035	NA	NA	NA	3.8E-05	1.E-03	NA	1.E-03
1,1,1-Trichloroethane	1.42E-04	5	NA	NA	NA	1.4E-04	3.E-05	NA	3.E-05
Methylene chloride	8.70E-04	1	0.00000047	3.2E-04	2.E-07	8.3E-04	8.E-04	2.E-07	8.E-04
Carbon tetrachloride	4.15E-04	0.1	0.000006	1.5E-04	9.E-07	4.0E-04	4.E-03	9.E-07	4.E-03
Xylenes	3.64E-03	0.1	NA	NA	NA	3.5E-03	3.E-02	NA	3.E-02
Toluene	8.46E-03	5	NA	NA	NA	8.1E-03	2.E-03	NA	2.E-03
1,2-Dibromoethane	ND	0.009	0.0006	ND	ND	ND	ND	ND	ND
Benzene	1.43E-03	0.03	0.0000078	5.3E-04	4.E-06	1.4E-03	5.E-02	4.E-06	5.E-02
Bromoform	ND	NA	0.0000011	ND	ND	ND	ND	ND	ND
Ethylbenzene	1.08E-03	1	0.0000025	4.0E-04	1.E-06	1.0E-03	1.E-03	1.E-06	1.E-03
IsoPropylbenzene	ND	0.4	NA	ND	ND	ND	ND	ND	ND
trans-1,3-Dichloropropene	ND	0.02	0.000004	ND	ND	ND	ND	ND	ND
Naphthalene	1.30E-04	0.003	0.000034	4.8E-05	2.E-06	1.2E-04	4.E-02	2.E-06	4.E-02
1,3-Butadiene	1.10E-04	0.002	0.00003	4.1E-05	1.E-06	1.1E-04	5.E-02	1.E-06	5.E-02
Methyl tert-butyl ether	1.02E-03	3	0.00000026	3.8E-04	1.E-07	9.8E-04	3.E-04	1.E-07	3.E-04
1,1,2-Trichloroethane	ND	NA	0.000016	ND	ND	ND	ND	ND	ND
1,2,4-Trimethylbenzene	4.13E-04	0.007	NA	NA	NA	4.0E-04	6.E-02	NA	6.E-02
1,2-Dichloropropane	ND	0.004	0.00001	ND	ND	ND	ND	ND	ND
1,3-Dichlorobenzene	ND	0.2	NA	ND	ND	ND	ND	ND	ND
1,4-Dichlorobenzene	3.78E-04	0.8	0.000011	1.4E-04	2.E-06	3.6E-04	5.E-04	2.E-06	5.E-04
Bromodichloromethane	3.35E-05	NA	0.000037	1.2E-05	5.E-07	NA	NA	5.E-07	NA
Chlorobenzene	4.60E-05	0.05	NA	NA	NA	4.4E-05	9.E-04	NA	9.E-04
C5-C8 Aliphatic Hydrocarbons	7.00E-02	0.2	NA	NA	NA	6.7E-02	3.E-01	NA	3.E-01
C9-C12 Aliphatic Hydrocarbons	7.00E-03	0.2	NA	NA	NA	6.7E-03	3.E-02	NA	3.E-02
C9-C10 Aromatic Hydrocarbons	ND	0.05	NA	ND	ND	ND	ND	ND	ND
Total					2.E-05		6.E-01	2.E-05	6.E-01

NA - Not available
NC - Not calculated
ND - Not detected

Exposure and Risk Estimates Associated With Inhalation of Volatile Compounds in Air
UniFirst Corporation
15 Olympia Avenue, Woburn, MA
Storage User - Long Term - Warehouse
Indoor Air
Volatilization from Indoor Air
Warehouse
IA-10

Receptor:	Storage User - Long Term - Warehou
Medium of Origin:	Indoor Air
Exposure Medium:	Indoor Air
Exposure Area:	Warehouse
Depth:	NA
Duration:	NA

$$C_{air} = \frac{C_{source}}{AF}$$

$$EC_{inh} = \frac{C_{air} \times ET \times EF \times ED}{AT}$$

$$HI_{inh} = \frac{EC_{inh}}{RfC}$$

$$Risk = EC_{inh} \times URF \times CF$$

Parameter	Definition	Units	Value	Comment
ET	Indoor Air Exposure Time	hrs/d	3	
EF	Indoor Air Exposure Frequency	ds/y	250	
ED	Indoor Air Exposure Duration	y	25	
ATc	Indoor Air Averaging Time - Cancer	hrs	683280	
ATn	Indoor Air Averaging Time - Non-Cancer	hrs	219000	
CF	Conversion Factor	ug/mg	1000	

Compound	EPC Indoor Air (mg/m3)	RfC (mg/m3)	URF 1/(ug/m3)	ADE-c mg/m3	Riskinh	ADE-nc mg/m3	HIinh	Risk (Indoor Air)	HI (Indoor Air)
Chloroform	1.41E-04	0.098	0.000023	3.9E-06	9.E-08	1.2E-05	1.E-04	9.E-08	1.E-04
1,1-Dichloroethane	4.05E-05	NA	0.0000016	1.1E-06	2.E-09	NA	NA	2.E-09	NA
1,2-Dichloroethane	8.33E-04	2.4	0.000026	2.3E-05	6.E-07	7.1E-05	3.E-05	6.E-07	3.E-05
1,1-Dichloroethene	3.95E-05	0.2	NA	NA	NA	3.4E-06	2.E-05	NA	2.E-05
Tetrachloroethene	2.80E-02	0.27	0.0000059	7.7E-04	5.E-06	2.4E-03	9.E-03	5.E-06	9.E-03
Trichloroethene	2.20E-04	NA	0.000002	6.0E-06	1.E-08	NA	NA	1.E-08	NA
Vinyl chloride	ND	0.1	0.0000044	ND	ND	ND	ND	ND	ND
trans-1,2-Dichloroethene	3.95E-05	0.06	NA	NA	NA	3.4E-06	6.E-05	NA	6.E-05
cis-1,2-Dichloroethene	9.50E-05	0.035	NA	NA	NA	8.1E-06	2.E-04	NA	2.E-04
1,1,1-Trichloroethane	3.71E-04	5	NA	NA	NA	3.2E-05	6.E-06	NA	6.E-06
Methylene chloride	3.82E-03	1	0.00000047	1.0E-04	5.E-08	3.3E-04	3.E-04	5.E-08	3.E-04
Carbon tetrachloride	4.40E-04	0.1	0.000006	1.2E-05	7.E-08	3.8E-05	4.E-04	7.E-08	4.E-04
Xylenes	2.97E-03	0.1	NA	NA	NA	2.5E-04	3.E-03	NA	3.E-03
Toluene	1.19E-02	5	NA	NA	NA	1.0E-03	2.E-04	NA	2.E-04
1,2-Dibromoethane	ND	0.009	0.0006	ND	ND	ND	ND	ND	ND
Benzene	8.62E-04	0.03	0.0000078	2.4E-05	2.E-07	7.4E-05	2.E-03	2.E-07	2.E-03
Bromoform	ND	NA	0.0000011	ND	ND	ND	ND	ND	ND
Ethylbenzene	8.03E-04	1	0.0000025	2.2E-05	6.E-08	6.9E-05	7.E-05	6.E-08	7.E-05
IsoPropylbenzene	ND	0.4	NA	ND	ND	ND	ND	ND	ND
trans-1,3-Dichloropropene	ND	0.02	0.000004	ND	ND	ND	ND	ND	ND
Naphthalene	4.30E-03	0.003	0.000034	1.2E-04	4.E-06	3.7E-04	1.E-01	4.E-06	1.E-01
1,3-Butadiene	2.20E-05	0.002	0.00003	6.0E-07	2.E-08	1.9E-06	9.E-04	2.E-08	9.E-04
Methyl tert-butyl ether	2.48E-04	3	0.00000026	6.8E-06	2.E-09	2.1E-05	7.E-06	2.E-09	7.E-06
1,1,2-Trichloroethane	ND	NA	0.000016	ND	ND	ND	ND	ND	ND
1,2,4-Trimethylbenzene	1.10E-03	0.007	NA	NA	NA	9.4E-05	1.E-02	NA	1.E-02
1,2-Dichloropropane	ND	0.004	0.00001	ND	ND	ND	ND	ND	ND
1,3-Dichlorobenzene	ND	0.2	NA	ND	ND	ND	ND	ND	ND
1,4-Dichlorobenzene	6.08E-03	0.8	0.000011	1.7E-04	2.E-06	5.2E-04	7.E-04	2.E-06	7.E-04
Bromodichloromethane	3.35E-05	NA	0.000037	9.2E-07	3.E-08	NA	NA	3.E-08	NA
Chlorobenzene	4.60E-05	0.05	NA	NA	NA	3.9E-06	8.E-05	NA	8.E-05
C5-C8 Aliphatic Hydrocarbons	5.20E-02	0.2	NA	NA	NA	4.5E-03	2.E-02	NA	2.E-02
C9-C12 Aliphatic Hydrocarbons	3.90E-02	0.2	NA	NA	NA	3.3E-03	2.E-02	NA	2.E-02
C9-C10 Aromatic Hydrocarbons	ND	0.05	NA	ND	ND	ND	ND	ND	ND
Total					1.E-05		2.E-01	1.E-05	2.E-01

NA - Not available
NC - Not calculated
ND - Not detected

Exposure and Risk Estimates Associated With Inhalation of Volatile Compounds in Air
UniFirst Corporation
15 Olympia Avenue, Woburn, MA
Storage User - Short Term - Warehouse
Indoor Air
Volatilization from Indoor Air
Warehouse
IA-10

Receptor:	Storage User - Short Term - Warehou
Medium of Origin:	Indoor Air
Exposure Medium:	Indoor Air
Exposure Area:	Warehouse
Depth:	NA
Duration:	NA

$$C_{air} = \frac{C_{source}}{AF}$$

$$EC_{inh} = \frac{C_{air} \times ET \times EF \times ED}{AT}$$

$$HI_{inh} = \frac{EC_{inh}}{RfC}$$

$$Risk = EC_{inh} \times URF \times CF$$

Parameter	Definition	Units	Value	Comment
ET	Indoor Air Exposure Time	hrs/d	3	
EF	Indoor Air Exposure Frequency	ds/y	250	
ED	Indoor Air Exposure Duration	y	5	
ATc	Indoor Air Averaging Time - Cancer	hrs	683280	
ATn	Indoor Air Averaging Time - Non-Cancer	hrs	43800	
CF	Conversion Factor	ug/mg	1000	

Compound	EPC Indoor Air (mg/m3)	RfC (mg/m3)	URF 1/(ug/m3)	ADE-c mg/m3	Riskinh	ADE-nc mg/m3	HIinh	Risk (Indoor Air)	HI (Indoor Air)
Chloroform	1.41E-04	0.098	0.000023	7.7E-07	2.E-08	1.2E-05	1.E-04	2.E-08	1.E-04
1,1-Dichloroethane	4.05E-05	NA	0.0000016	2.2E-07	4.E-10	NA	NA	4.E-10	NA
1,2-Dichloroethane	8.33E-04	2.4	0.000026	4.6E-06	1.E-07	7.1E-05	3.E-05	1.E-07	3.E-05
1,1-Dichloroethene	3.95E-05	0.2	NA	NA	NA	3.4E-06	2.E-05	NA	2.E-05
Tetrachloroethene	2.80E-02	0.27	0.0000059	1.5E-04	9.E-07	2.4E-03	9.E-03	9.E-07	9.E-03
Trichloroethene	2.20E-04	NA	0.000002	1.2E-06	2.E-09	NA	NA	2.E-09	NA
Vinyl chloride	ND	0.1	0.0000044	ND	ND	ND	ND	ND	ND
trans-1,2-Dichloroethene	3.95E-05	0.06	NA	NA	NA	3.4E-06	6.E-05	NA	6.E-05
cis-1,2-Dichloroethene	9.50E-05	0.035	NA	NA	NA	8.1E-06	2.E-04	NA	2.E-04
1,1,1-Trichloroethane	3.71E-04	5	NA	NA	NA	3.2E-05	6.E-06	NA	6.E-06
Methylene chloride	3.82E-03	1	0.00000047	2.1E-05	1.E-08	3.3E-04	3.E-04	1.E-08	3.E-04
Carbon tetrachloride	4.40E-04	0.1	0.000006	2.4E-06	1.E-08	3.8E-05	4.E-04	1.E-08	4.E-04
Xylenes	2.97E-03	0.1	NA	NA	NA	2.5E-04	3.E-03	NA	3.E-03
Toluene	1.19E-02	5	NA	NA	NA	1.0E-03	2.E-04	NA	2.E-04
1,2-Dibromoethane	ND	0.009	0.0006	ND	ND	ND	ND	ND	ND
Benzene	8.62E-04	0.03	0.0000078	4.7E-06	4.E-08	7.4E-05	2.E-03	4.E-08	2.E-03
Bromoform	ND	NA	0.0000011	ND	ND	ND	ND	ND	ND
Ethylbenzene	8.03E-04	1	0.0000025	4.4E-06	1.E-08	6.9E-05	7.E-05	1.E-08	7.E-05
IsoPropylbenzene	ND	0.4	NA	ND	ND	ND	ND	ND	ND
trans-1,3-Dichloropropene	ND	0.02	0.000004	ND	ND	ND	ND	ND	ND
Naphthalene	4.30E-03	0.003	0.000034	2.4E-05	8.E-07	3.7E-04	1.E-01	8.E-07	1.E-01
1,3-Butadiene	2.20E-05	0.002	0.00003	1.2E-07	4.E-09	1.9E-06	9.E-04	4.E-09	9.E-04
Methyl tert-butyl ether	2.48E-04	3	0.00000026	1.4E-06	4.E-10	2.1E-05	7.E-06	4.E-10	7.E-06
1,1,2-Trichloroethane	ND	NA	0.000016	ND	ND	ND	ND	ND	ND
1,2,4-Trimethylbenzene	1.10E-03	0.007	NA	NA	NA	9.4E-05	1.E-02	NA	1.E-02
1,2-Dichloropropane	ND	0.004	0.00001	ND	ND	ND	ND	ND	ND
1,3-Dichlorobenzene	ND	0.2	NA	ND	ND	ND	ND	ND	ND
1,4-Dichlorobenzene	6.08E-03	0.8	0.000011	3.3E-05	4.E-07	5.2E-04	7.E-04	4.E-07	7.E-04
Bromodichloromethane	3.35E-05	NA	0.000037	1.8E-07	7.E-09	NA	NA	7.E-09	NA
Chlorobenzene	4.60E-05	0.05	NA	NA	NA	3.9E-06	8.E-05	NA	8.E-05
C5-C8 Aliphatic Hydrocarbons	5.20E-02	0.2	NA	NA	NA	4.5E-03	2.E-02	NA	2.E-02
C9-C12 Aliphatic Hydrocarbons	3.90E-02	0.2	NA	NA	NA	3.3E-03	2.E-02	NA	2.E-02
C9-C10 Aromatic Hydrocarbons	ND	0.05	NA	ND	ND	ND	ND	ND	ND
Total					2.E-06		2.E-01	2.E-06	2.E-01

NA - Not available
NC - Not calculated
ND - Not detected

Exposure and Risk Estimates Associated With Inhalation of Volatile Compounds in Air
UniFirst Corporation
15 Olympia Avenue, Woburn, MA
Commercial/Industrial Worker - Long Term
Indoor Air
Volatilization from Indoor Air
Warehouse
IA-10

Receptor:	Commercial/Industrial Worker - Long
Medium of Origin:	Indoor Air
Exposure Medium:	Indoor Air
Exposure Area:	Warehouse
Depth:	NA
Duration:	NA

$$C_{air} = \frac{C_{source}}{AF}$$

$$EC_{inh} = \frac{C_{air} \times ET \times EF \times ED}{AT}$$

$$HI_{inh} = \frac{EC_{inh}}{RfC}$$

$$Risk = EC_{inh} \times URF \times CF$$

Parameter	Definition	Units	Value	Comment
ET	Indoor Air Exposure Time	hrs/d	8	
EF	Indoor Air Exposure Frequency	ds/y	250	
ED	Indoor Air Exposure Duration	y	25	
ATc	Indoor Air Averaging Time - Cancer	hrs	683280	
ATn	Indoor Air Averaging Time - Non-Cancer	hrs	219000	
CF	Conversion Factor	ug/mg	1000	

Compound	EPC Indoor Air (mg/m3)	RfC (mg/m3)	URF 1/(ug/m3)	ADE-c mg/m3	Riskinh	ADE-nc mg/m3	HIinh	Risk (Indoor Air)	HI (Indoor Air)
Chloroform	1.41E-04	0.098	0.000023	1.0E-05	2.E-07	3.2E-05	3.E-04	2.E-07	3.E-04
1,1-Dichloroethane	4.05E-05	NA	0.0000016	3.0E-06	5.E-09	NA	NA	5.E-09	NA
1,2-Dichloroethane	8.33E-04	2.4	0.000026	6.1E-05	2.E-06	1.9E-04	8.E-05	2.E-06	8.E-05
1,1-Dichloroethene	3.95E-05	0.2	NA	NA	NA	9.0E-06	5.E-05	NA	5.E-05
Tetrachloroethene	2.80E-02	0.27	0.0000059	2.0E-03	1.E-05	6.4E-03	2.E-02	1.E-05	2.E-02
Trichloroethene	2.20E-04	NA	0.000002	1.6E-05	3.E-08	NA	NA	3.E-08	NA
Vinyl chloride	ND	0.1	0.0000044	ND	ND	ND	ND	ND	ND
trans-1,2-Dichloroethene	3.95E-05	0.06	NA	NA	NA	9.0E-06	2.E-04	NA	2.E-04
cis-1,2-Dichloroethene	9.50E-05	0.035	NA	NA	NA	2.2E-05	6.E-04	NA	6.E-04
1,1,1-Trichloroethane	3.71E-04	5	NA	NA	NA	8.5E-05	2.E-05	NA	2.E-05
Methylene chloride	3.82E-03	1	0.00000047	2.8E-04	1.E-07	8.7E-04	9.E-04	1.E-07	9.E-04
Carbon tetrachloride	4.40E-04	0.1	0.000006	3.2E-05	2.E-07	1.0E-04	1.E-03	2.E-07	1.E-03
Xylenes	2.97E-03	0.1	NA	NA	NA	6.8E-04	7.E-03	NA	7.E-03
Toluene	1.19E-02	5	NA	NA	NA	2.7E-03	5.E-04	NA	5.E-04
1,2-Dibromoethane	ND	0.009	0.0006	ND	ND	ND	ND	ND	ND
Benzene	8.62E-04	0.03	0.0000078	6.3E-05	5.E-07	2.0E-04	7.E-03	5.E-07	7.E-03
Bromoform	ND	NA	0.0000011	ND	ND	ND	ND	ND	ND
Ethylbenzene	8.03E-04	1	0.0000025	5.9E-05	1.E-07	1.8E-04	2.E-04	1.E-07	2.E-04
IsoPropylbenzene	ND	0.4	NA	ND	ND	ND	ND	ND	ND
trans-1,3-Dichloropropene	ND	0.02	0.000004	ND	ND	ND	ND	ND	ND
Naphthalene	4.30E-03	0.003	0.000034	3.1E-04	1.E-05	9.8E-04	3.E-01	1.E-05	3.E-01
1,3-Butadiene	2.20E-05	0.002	0.00003	1.6E-06	5.E-08	5.0E-06	3.E-03	5.E-08	3.E-03
Methyl tert-butyl ether	2.48E-04	3	0.00000026	1.8E-05	5.E-09	5.7E-05	2.E-05	5.E-09	2.E-05
1,1,2-Trichloroethane	ND	NA	0.000016	ND	ND	ND	ND	ND	ND
1,2,4-Trimethylbenzene	1.10E-03	0.007	NA	NA	NA	2.5E-04	4.E-02	NA	4.E-02
1,2-Dichloropropane	ND	0.004	0.00001	ND	ND	ND	ND	ND	ND
1,3-Dichlorobenzene	ND	0.2	NA	ND	ND	ND	ND	ND	ND
1,4-Dichlorobenzene	6.08E-03	0.8	0.000011	4.4E-04	5.E-06	1.4E-03	2.E-03	5.E-06	2.E-03
Bromodichloromethane	3.35E-05	NA	0.000037	2.5E-06	9.E-08	NA	NA	9.E-08	NA
Chlorobenzene	4.60E-05	0.05	NA	NA	NA	1.1E-05	2.E-04	NA	2.E-04
C5-C8 Aliphatic Hydrocarbons	5.20E-02	0.2	NA	NA	NA	1.2E-02	6.E-02	NA	6.E-02
C9-C12 Aliphatic Hydrocarbons	3.90E-02	0.2	NA	NA	NA	8.9E-03	4.E-02	NA	4.E-02
C9-C10 Aromatic Hydrocarbons	ND	0.05	NA	ND	ND	ND	ND	ND	ND
Total					3.E-05		5.E-01	3.E-05	5.E-01

NA - Not available
NC - Not calculated
ND - Not detected

Exposure and Risk Estimates Associated With Inhalation of Volatile Compounds in Air
UniFirst Corporation
15 Olympia Avenue, Woburn, MA
Commercial/Industrial Worker - Short Term
Indoor Air
Volatilization from Indoor Air
Warehouse
IA-10

Receptor:	Commercial/Industrial Worker - Short
Medium of Origin:	Indoor Air
Exposure Medium:	Indoor Air
Exposure Area:	Warehouse
Depth:	NA
Duration:	NA

$$C_{air} = \frac{C_{source}}{AF}$$

$$EC_{inh} = \frac{C_{air} \times ET \times EF \times ED}{AT}$$

$$HI_{inh} = \frac{EC_{inh}}{RfC}$$

$$Risk = EC_{inh} \times URF \times CF$$

Parameter	Definition	Units	Value	Comment
ET	Indoor Air Exposure Time	hrs/d	8	
EF	Indoor Air Exposure Frequency	ds/y	250	
ED	Indoor Air Exposure Duration	y	5	
ATc	Indoor Air Averaging Time - Cancer	hrs	683280	
ATn	Indoor Air Averaging Time - Non-Cancer	hrs	43800	
CF	Conversion Factor	ug/mg	1000	

Compound	EPC Indoor Air (mg/m3)	RfC (mg/m3)	URF 1/(ug/m3)	ADE-c mg/m3	Riskinh	ADE-nc mg/m3	HIinh	Risk (Indoor Air)	HI (Indoor Air)
Chloroform	1.41E-04	0.098	0.000023	2.1E-06	5.E-08	3.2E-05	3.E-04	5.E-08	3.E-04
1,1-Dichloroethane	4.05E-05	NA	0.0000016	5.9E-07	9.E-10	NA	NA	9.E-10	NA
1,2-Dichloroethane	8.33E-04	2.4	0.000026	1.2E-05	3.E-07	1.9E-04	8.E-05	3.E-07	8.E-05
1,1-Dichloroethene	3.95E-05	0.2	NA	NA	NA	9.0E-06	5.E-05	NA	5.E-05
Tetrachloroethene	2.80E-02	0.27	0.0000059	4.1E-04	2.E-06	6.4E-03	2.E-02	2.E-06	2.E-02
Trichloroethene	2.20E-04	NA	0.000002	3.2E-06	6.E-09	NA	NA	6.E-09	NA
Vinyl chloride	ND	0.1	0.0000044	ND	ND	ND	ND	ND	ND
trans-1,2-Dichloroethene	3.95E-05	0.06	NA	NA	NA	9.0E-06	2.E-04	NA	2.E-04
cis-1,2-Dichloroethene	9.50E-05	0.035	NA	NA	NA	2.2E-05	6.E-04	NA	6.E-04
1,1,1-Trichloroethane	3.71E-04	5	NA	NA	NA	8.5E-05	2.E-05	NA	2.E-05
Methylene chloride	3.82E-03	1	0.00000047	5.6E-05	3.E-08	8.7E-04	9.E-04	3.E-08	9.E-04
Carbon tetrachloride	4.40E-04	0.1	0.000006	6.4E-06	4.E-08	1.0E-04	1.E-03	4.E-08	1.E-03
Xylenes	2.97E-03	0.1	NA	NA	NA	6.8E-04	7.E-03	NA	7.E-03
Toluene	1.19E-02	5	NA	NA	NA	2.7E-03	5.E-04	NA	5.E-04
1,2-Dibromoethane	ND	0.009	0.0006	ND	ND	ND	ND	ND	ND
Benzene	8.62E-04	0.03	0.0000078	1.3E-05	1.E-07	2.0E-04	7.E-03	1.E-07	7.E-03
Bromoform	ND	NA	0.0000011	ND	ND	ND	ND	ND	ND
Ethylbenzene	8.03E-04	1	0.0000025	1.2E-05	3.E-08	1.8E-04	2.E-04	3.E-08	2.E-04
IsoPropylbenzene	ND	0.4	NA	ND	ND	ND	ND	ND	ND
trans-1,3-Dichloropropene	ND	0.02	0.000004	ND	ND	ND	ND	ND	ND
Naphthalene	4.30E-03	0.003	0.000034	6.3E-05	2.E-06	9.8E-04	3.E-01	2.E-06	3.E-01
1,3-Butadiene	2.20E-05	0.002	0.00003	3.2E-07	1.E-08	5.0E-06	3.E-03	1.E-08	3.E-03
Methyl tert-butyl ether	2.48E-04	3	0.00000026	3.6E-06	9.E-10	5.7E-05	2.E-05	9.E-10	2.E-05
1,1,2-Trichloroethane	ND	NA	0.000016	ND	ND	ND	ND	ND	ND
1,2,4-Trimethylbenzene	1.10E-03	0.007	NA	NA	NA	2.5E-04	4.E-02	NA	4.E-02
1,2-Dichloropropane	ND	0.004	0.00001	ND	ND	ND	ND	ND	ND
1,3-Dichlorobenzene	ND	0.2	NA	ND	ND	ND	ND	ND	ND
1,4-Dichlorobenzene	6.08E-03	0.8	0.000011	8.9E-05	1.E-06	1.4E-03	2.E-03	1.E-06	2.E-03
Bromodichloromethane	3.35E-05	NA	0.000037	4.9E-07	2.E-08	NA	NA	2.E-08	NA
Chlorobenzene	4.60E-05	0.05	NA	NA	NA	1.1E-05	2.E-04	NA	2.E-04
C5-C8 Aliphatic Hydrocarbons	5.20E-02	0.2	NA	NA	NA	1.2E-02	6.E-02	NA	6.E-02
C9-C12 Aliphatic Hydrocarbons	3.90E-02	0.2	NA	NA	NA	8.9E-03	4.E-02	NA	4.E-02
C9-C10 Aromatic Hydrocarbons	ND	0.05	NA	ND	ND	ND	ND	ND	ND
Total					6.E-06		5.E-01	6.E-06	5.E-01

NA - Not available
NC - Not calculated
ND - Not detected

Exposure and Risk Estimates Associated With Inhalation of Volatile Compounds in Air
UniFirst Corporation
15 Olympia Avenue, Woburn, MA
Resident - Long Term
Indoor Air
Volatilization from Indoor Air
Warehouse
IA-10

Receptor:	Resident - Long Term
Medium of Origin:	Indoor Air
Exposure Medium:	Indoor Air
Exposure Area:	Warehouse
Depth:	NA
Duration:	NA

$$C_{air} = \frac{C_{source}}{AF}$$

$$EC_{inh} = \frac{C_{air} \times ET \times EF \times ED}{AT}$$

$$HI_{inh} = \frac{EC_{inh}}{RfC}$$

$$Risk = EC_{inh} \times URF \times CF$$

Parameter	Definition	Units	Value	Comment
ET	Indoor Air Exposure Time	hrs/d	24	
EF	Indoor Air Exposure Frequency	ds/y	350	
ED	Indoor Air Exposure Duration	y	30	
ATc	Indoor Air Averaging Time - Cancer	hrs	683280	
ATn	Indoor Air Averaging Time - Non-Cancer	hrs	262800	
CF	Conversion Factor	ug/mg	1000	

Compound	EPC Indoor Air (mg/m3)	RfC (mg/m3)	URF 1/(ug/m3)	ADE-c mg/m3	Riskinh	ADE-nc mg/m3	HIinh	Risk (Indoor Air)	HI (Indoor Air)
Chloroform	1.41E-04	0.098	0.000023	5.2E-05	1.E-06	1.4E-04	1.E-03	1.E-06	1.E-03
1,1-Dichloroethane	4.05E-05	NA	0.0000016	1.5E-05	2.E-08	NA	NA	2.E-08	NA
1,2-Dichloroethane	8.33E-04	2.4	0.000026	3.1E-04	8.E-06	8.0E-04	3.E-04	8.E-06	3.E-04
1,1-Dichloroethene	3.95E-05	0.2	NA	NA	NA	3.8E-05	2.E-04	NA	2.E-04
Tetrachloroethene	2.80E-02	0.27	0.0000059	1.0E-02	6.E-05	2.7E-02	1.E-01	6.E-05	1.E-01
Trichloroethene	2.20E-04	NA	0.000002	8.1E-05	2.E-07	NA	NA	2.E-07	NA
Vinyl chloride	ND	0.1	0.0000044	ND	ND	ND	ND	ND	ND
trans-1,2-Dichloroethene	3.95E-05	0.06	NA	NA	NA	3.8E-05	6.E-04	NA	6.E-04
cis-1,2-Dichloroethene	9.50E-05	0.035	NA	NA	NA	9.1E-05	3.E-03	NA	3.E-03
1,1,1-Trichloroethane	3.71E-04	5	NA	NA	NA	3.6E-04	7.E-05	NA	7.E-05
Methylene chloride	3.82E-03	1	0.00000047	1.4E-03	7.E-07	3.7E-03	4.E-03	7.E-07	4.E-03
Carbon tetrachloride	4.40E-04	0.1	0.000006	1.6E-04	1.E-06	4.2E-04	4.E-03	1.E-06	4.E-03
Xylenes	2.97E-03	0.1	NA	NA	NA	2.8E-03	3.E-02	NA	3.E-02
Toluene	1.19E-02	5	NA	NA	NA	1.1E-02	2.E-03	NA	2.E-03
1,2-Dibromoethane	ND	0.009	0.0006	ND	ND	ND	ND	ND	ND
Benzene	8.62E-04	0.03	0.0000078	3.2E-04	2.E-06	8.3E-04	3.E-02	2.E-06	3.E-02
Bromoform	ND	NA	0.0000011	ND	ND	ND	ND	ND	ND
Ethylbenzene	8.03E-04	1	0.0000025	3.0E-04	7.E-07	7.7E-04	8.E-04	7.E-07	8.E-04
IsoPropylbenzene	ND	0.4	NA	ND	ND	ND	ND	ND	ND
trans-1,3-Dichloropropene	ND	0.02	0.000004	ND	ND	ND	ND	ND	ND
Naphthalene	4.30E-03	0.003	0.000034	1.6E-03	5.E-05	4.1E-03	1.E+00	5.E-05	1.E+00
1,3-Butadiene	2.20E-05	0.002	0.00003	8.1E-06	2.E-07	2.1E-05	1.E-02	2.E-07	1.E-02
Methyl tert-butyl ether	2.48E-04	3	0.00000026	9.1E-05	2.E-08	2.4E-04	8.E-05	2.E-08	8.E-05
1,1,2-Trichloroethane	ND	NA	0.000016	ND	ND	ND	ND	ND	ND
1,2,4-Trimethylbenzene	1.10E-03	0.007	NA	NA	NA	1.1E-03	2.E-01	NA	2.E-01
1,2-Dichloropropane	ND	0.004	0.00001	ND	ND	ND	ND	ND	ND
1,3-Dichlorobenzene	ND	0.2	NA	ND	ND	ND	ND	ND	ND
1,4-Dichlorobenzene	6.08E-03	0.8	0.000011	2.2E-03	2.E-05	5.8E-03	7.E-03	2.E-05	7.E-03
Bromodichloromethane	3.35E-05	NA	0.000037	1.2E-05	5.E-07	NA	NA	5.E-07	NA
Chlorobenzene	4.60E-05	0.05	NA	NA	NA	4.4E-05	9.E-04	NA	9.E-04
C5-C8 Aliphatic Hydrocarbons	5.20E-02	0.2	NA	NA	NA	5.0E-02	2.E-01	NA	2.E-01
C9-C12 Aliphatic Hydrocarbons	3.90E-02	0.2	NA	NA	NA	3.7E-02	2.E-01	NA	2.E-01
C9-C10 Aromatic Hydrocarbons	ND	0.05	NA	ND	ND	ND	ND	ND	ND
Total					2.E-04		2.E+00	2.E-04	2.E+00

NA - Not available
NC - Not calculated
ND - Not detected

Exposure and Risk Estimates Associated With Inhalation of Volatile Compounds in Air
UniFirst Corporation
15 Olympia Avenue, Woburn, MA
Storage User - Long Term - Warehouse
Indoor Air
Volatilization from Indoor Air
Warehouse
IA-10A

Receptor:	Storage User - Long Term - Warehou
Medium of Origin:	Indoor Air
Exposure Medium:	Indoor Air
Exposure Area:	Warehouse
Depth:	NA
Duration:	NA

$$C_{air} = \frac{C_{source}}{AF}$$

$$EC_{inh} = \frac{C_{air} \times ET \times EF \times ED}{AT}$$

$$HI_{inh} = \frac{EC_{inh}}{RfC}$$

$$Risk = EC_{inh} \times URF \times CF$$

Parameter	Definition	Units	Value	Comment
ET	Indoor Air Exposure Time	hrs/d	3	
EF	Indoor Air Exposure Frequency	ds/y	250	
ED	Indoor Air Exposure Duration	y	25	
ATc	Indoor Air Averaging Time - Cancer	hrs	683280	
ATn	Indoor Air Averaging Time - Non-Cancer	hrs	219000	
CF	Conversion Factor	ug/mg	1000	

Compound	EPC Indoor Air (mg/m3)	RfC (mg/m3)	URF 1/(ug/m3)	ADE-c mg/m3	Riskinh	ADE-nc mg/m3	HIinh	Risk (Indoor Air)	HI (Indoor Air)
Chloroform	1.46E-04	0.098	0.000023	4.0E-06	9.E-08	1.3E-05	1.E-04	9.E-08	1.E-04
1,1-Dichloroethane	4.05E-05	NA	0.0000016	1.1E-06	2.E-09	NA	NA	2.E-09	NA
1,2-Dichloroethane	8.74E-04	2.4	0.000026	2.4E-05	6.E-07	7.5E-05	3.E-05	6.E-07	3.E-05
1,1-Dichloroethene	3.95E-05	0.2	NA	NA	NA	3.4E-06	2.E-05	NA	2.E-05
Tetrachloroethene	3.35E-02	0.27	0.0000059	9.2E-04	5.E-06	2.9E-03	1.E-02	5.E-06	1.E-02
Trichloroethene	2.31E-04	NA	0.000002	6.3E-06	1.E-08	NA	NA	1.E-08	NA
Vinyl chloride	ND	0.1	0.0000044	ND	ND	ND	ND	ND	ND
trans-1,2-Dichloroethene	3.95E-05	0.06	NA	NA	NA	3.4E-06	6.E-05	NA	6.E-05
cis-1,2-Dichloroethene	1.03E-04	0.035	NA	NA	NA	8.8E-06	3.E-04	NA	3.E-04
1,1,1-Trichloroethane	3.82E-04	5	NA	NA	NA	3.3E-05	7.E-06	NA	7.E-06
Methylene chloride	1.74E-03	1	0.00000047	4.8E-05	2.E-08	1.5E-04	1.E-04	2.E-08	1.E-04
Carbon tetrachloride	4.15E-04	0.1	0.000006	1.1E-05	7.E-08	3.6E-05	4.E-04	7.E-08	4.E-04
Xylenes	3.52E-03	0.1	NA	NA	NA	3.0E-04	3.E-03	NA	3.E-03
Toluene	1.29E-02	5	NA	NA	NA	1.1E-03	2.E-04	NA	2.E-04
1,2-Dibromoethane	ND	0.009	0.0006	ND	ND	ND	ND	ND	ND
Benzene	9.06E-04	0.03	0.0000078	2.5E-05	2.E-07	7.8E-05	3.E-03	2.E-07	3.E-03
Bromoform	ND	NA	0.0000011	ND	ND	ND	ND	ND	ND
Ethylbenzene	9.50E-04	1	0.0000025	2.6E-05	7.E-08	8.1E-05	8.E-05	7.E-08	8.E-05
IsoPropylbenzene	ND	0.4	NA	ND	ND	ND	ND	ND	ND
trans-1,3-Dichloropropene	ND	0.02	0.000004	ND	ND	ND	ND	ND	ND
Naphthalene	5.91E-03	0.003	0.000034	1.6E-04	6.E-06	5.1E-04	2.E-01	6.E-06	2.E-01
1,3-Butadiene	2.20E-05	0.002	0.00003	6.0E-07	2.E-08	1.9E-06	9.E-04	2.E-08	9.E-04
Methyl tert-butyl ether	2.66E-04	3	0.00000026	7.3E-06	2.E-09	2.3E-05	8.E-06	2.E-09	8.E-06
1,1,2-Trichloroethane	ND	NA	0.000016	ND	ND	ND	ND	ND	ND
1,2,4-Trimethylbenzene	1.33E-03	0.007	NA	NA	NA	1.1E-04	2.E-02	NA	2.E-02
1,2-Dichloropropane	ND	0.004	0.00001	ND	ND	ND	ND	ND	ND
1,3-Dichlorobenzene	ND	0.2	NA	ND	ND	ND	ND	ND	ND
1,4-Dichlorobenzene	6.72E-03	0.8	0.000011	1.8E-04	2.E-06	5.8E-04	7.E-04	2.E-06	7.E-04
Bromodichloromethane	3.35E-05	NA	0.000037	9.2E-07	3.E-08	NA	NA	3.E-08	NA
Chlorobenzene	4.60E-05	0.05	NA	NA	NA	3.9E-06	8.E-05	NA	8.E-05
C5-C8 Aliphatic Hydrocarbons	5.50E-02	0.2	NA	NA	NA	4.7E-03	2.E-02	NA	2.E-02
C9-C12 Aliphatic Hydrocarbons	4.70E-02	0.2	NA	NA	NA	4.0E-03	2.E-02	NA	2.E-02
C9-C10 Aromatic Hydrocarbons	ND	0.05	NA	ND	ND	ND	ND	ND	ND
Total					1.E-05		2.E-01	1.E-05	2.E-01

NA - Not available
NC - Not calculated
ND - Not detected

Exposure and Risk Estimates Associated With Inhalation of Volatile Compounds in Air
UniFirst Corporation
15 Olympia Avenue, Woburn, MA
Storage User - Short Term - Warehouse
Indoor Air
Volatilization from Indoor Air
Warehouse
IA-10A

Receptor:	Storage User - Short Term - Warehou
Medium of Origin:	Indoor Air
Exposure Medium:	Indoor Air
Exposure Area:	Warehouse
Depth:	NA
Duration:	NA

$$C_{air} = \frac{C_{source}}{AF}$$

$$EC_{inh} = \frac{C_{air} \times ET \times EF \times ED}{AT}$$

$$HI_{inh} = \frac{EC_{inh}}{RfC}$$

$$Risk = EC_{inh} \times URF \times CF$$

Parameter	Definition	Units	Value	Comment
ET	Indoor Air Exposure Time	hrs/d	3	
EF	Indoor Air Exposure Frequency	ds/y	250	
ED	Indoor Air Exposure Duration	y	5	
ATc	Indoor Air Averaging Time - Cancer	hrs	683280	
ATn	Indoor Air Averaging Time - Non-Cancer	hrs	43800	
CF	Conversion Factor	ug/mg	1000	

Compound	EPC Indoor Air (mg/m3)	RfC (mg/m3)	URF 1/(ug/m3)	ADE-c mg/m3	Riskinh	ADE-nc mg/m3	HIinh	Risk (Indoor Air)	HI (Indoor Air)
Chloroform	1.46E-04	0.098	0.000023	8.0E-07	2.E-08	1.3E-05	1.E-04	2.E-08	1.E-04
1,1-Dichloroethane	4.05E-05	NA	0.0000016	2.2E-07	4.E-10	NA	NA	4.E-10	NA
1,2-Dichloroethane	8.74E-04	2.4	0.000026	4.8E-06	1.E-07	7.5E-05	3.E-05	1.E-07	3.E-05
1,1-Dichloroethene	3.95E-05	0.2	NA	NA	NA	3.4E-06	2.E-05	NA	2.E-05
Tetrachloroethene	3.35E-02	0.27	0.0000059	1.8E-04	1.E-06	2.9E-03	1.E-02	1.E-06	1.E-02
Trichloroethene	2.31E-04	NA	0.000002	1.3E-06	3.E-09	NA	NA	3.E-09	NA
Vinyl chloride	ND	0.1	0.0000044	ND	ND	ND	ND	ND	ND
trans-1,2-Dichloroethene	3.95E-05	0.06	NA	NA	NA	3.4E-06	6.E-05	NA	6.E-05
cis-1,2-Dichloroethene	1.03E-04	0.035	NA	NA	NA	8.8E-06	3.E-04	NA	3.E-04
1,1,1-Trichloroethane	3.82E-04	5	NA	NA	NA	3.3E-05	7.E-06	NA	7.E-06
Methylene chloride	1.74E-03	1	0.00000047	9.5E-06	4.E-09	1.5E-04	1.E-04	4.E-09	1.E-04
Carbon tetrachloride	4.15E-04	0.1	0.000006	2.3E-06	1.E-08	3.6E-05	4.E-04	1.E-08	4.E-04
Xylenes	3.52E-03	0.1	NA	NA	NA	3.0E-04	3.E-03	NA	3.E-03
Toluene	1.29E-02	5	NA	NA	NA	1.1E-03	2.E-04	NA	2.E-04
1,2-Dibromoethane	ND	0.009	0.0006	ND	ND	ND	ND	ND	ND
Benzene	9.06E-04	0.03	0.0000078	5.0E-06	4.E-08	7.8E-05	3.E-03	4.E-08	3.E-03
Bromoform	ND	NA	0.0000011	ND	ND	ND	ND	ND	ND
Ethylbenzene	9.50E-04	1	0.0000025	5.2E-06	1.E-08	8.1E-05	8.E-05	1.E-08	8.E-05
IsoPropylbenzene	ND	0.4	NA	ND	ND	ND	ND	ND	ND
trans-1,3-Dichloropropene	ND	0.02	0.000004	ND	ND	ND	ND	ND	ND
Naphthalene	5.91E-03	0.003	0.000034	3.2E-05	1.E-06	5.1E-04	2.E-01	1.E-06	2.E-01
1,3-Butadiene	2.20E-05	0.002	0.00003	1.2E-07	4.E-09	1.9E-06	9.E-04	4.E-09	9.E-04
Methyl tert-butyl ether	2.66E-04	3	0.00000026	1.5E-06	4.E-10	2.3E-05	8.E-06	4.E-10	8.E-06
1,1,2-Trichloroethane	ND	NA	0.000016	ND	ND	ND	ND	ND	ND
1,2,4-Trimethylbenzene	1.33E-03	0.007	NA	NA	NA	1.1E-04	2.E-02	NA	2.E-02
1,2-Dichloropropane	ND	0.004	0.00001	ND	ND	ND	ND	ND	ND
1,3-Dichlorobenzene	ND	0.2	NA	ND	ND	ND	ND	ND	ND
1,4-Dichlorobenzene	6.72E-03	0.8	0.000011	3.7E-05	4.E-07	5.8E-04	7.E-04	4.E-07	7.E-04
Bromodichloromethane	3.35E-05	NA	0.000037	1.8E-07	7.E-09	NA	NA	7.E-09	NA
Chlorobenzene	4.60E-05	0.05	NA	NA	NA	3.9E-06	8.E-05	NA	8.E-05
C5-C8 Aliphatic Hydrocarbons	5.50E-02	0.2	NA	NA	NA	4.7E-03	2.E-02	NA	2.E-02
C9-C12 Aliphatic Hydrocarbons	4.70E-02	0.2	NA	NA	NA	4.0E-03	2.E-02	NA	2.E-02
C9-C10 Aromatic Hydrocarbons	ND	0.05	NA	ND	ND	ND	ND	ND	ND
Total					3.E-06		2.E-01	3.E-06	2.E-01

NA - Not available
NC - Not calculated
ND - Not detected

Exposure and Risk Estimates Associated With Inhalation of Volatile Compounds in Air
UniFirst Corporation
15 Olympia Avenue, Woburn, MA
Commercial/Industrial Worker - Long Term
Indoor Air
Volatilization from Indoor Air
Warehouse
IA-10A

Receptor:	Commercial/Industrial Worker - Long
Medium of Origin:	Indoor Air
Exposure Medium:	Indoor Air
Exposure Area:	Warehouse
Depth:	NA
Duration:	NA

$$C_{air} = \frac{C_{source}}{AF}$$

$$EC_{inh} = \frac{C_{air} \times ET \times EF \times ED}{AT}$$

$$HI_{inh} = \frac{EC_{inh}}{RfC}$$

$$Risk = EC_{inh} \times URF \times CF$$

Parameter	Definition	Units	Value	Comment
ET	Indoor Air Exposure Time	hrs/d	8	
EF	Indoor Air Exposure Frequency	ds/y	250	
ED	Indoor Air Exposure Duration	y	25	
ATc	Indoor Air Averaging Time - Cancer	hrs	683280	
ATn	Indoor Air Averaging Time - Non-Cancer	hrs	219000	
CF	Conversion Factor	ug/mg	1000	

Compound	EPC Indoor Air (mg/m3)	RfC (mg/m3)	URF 1/(ug/m3)	ADE-c mg/m3	Riskinh	ADE-nc mg/m3	HIinh	Risk (Indoor Air)	HI (Indoor Air)
Chloroform	1.46E-04	0.098	0.000023	1.1E-05	2.E-07	3.3E-05	3.E-04	2.E-07	3.E-04
1,1-Dichloroethane	4.05E-05	NA	0.0000016	3.0E-06	5.E-09	NA	NA	5.E-09	NA
1,2-Dichloroethane	8.74E-04	2.4	0.000026	6.4E-05	2.E-06	2.0E-04	8.E-05	2.E-06	8.E-05
1,1-Dichloroethene	3.95E-05	0.2	NA	NA	NA	9.0E-06	5.E-05	NA	5.E-05
Tetrachloroethene	3.35E-02	0.27	0.0000059	2.5E-03	1.E-05	7.6E-03	3.E-02	1.E-05	3.E-02
Trichloroethene	2.31E-04	NA	0.000002	1.7E-05	3.E-08	NA	NA	3.E-08	NA
Vinyl chloride	ND	0.1	0.0000044	ND	ND	ND	ND	ND	ND
trans-1,2-Dichloroethene	3.95E-05	0.06	NA	NA	NA	9.0E-06	2.E-04	NA	2.E-04
cis-1,2-Dichloroethene	1.03E-04	0.035	NA	NA	NA	2.4E-05	7.E-04	NA	7.E-04
1,1,1-Trichloroethane	3.82E-04	5	NA	NA	NA	8.7E-05	2.E-05	NA	2.E-05
Methylene chloride	1.74E-03	1	0.00000047	1.3E-04	6.E-08	4.0E-04	4.E-04	6.E-08	4.E-04
Carbon tetrachloride	4.15E-04	0.1	0.000006	3.0E-05	2.E-07	9.5E-05	9.E-04	2.E-07	9.E-04
Xylenes	3.52E-03	0.1	NA	NA	NA	8.0E-04	8.E-03	NA	8.E-03
Toluene	1.29E-02	5	NA	NA	NA	2.9E-03	6.E-04	NA	6.E-04
1,2-Dibromoethane	ND	0.009	0.0006	ND	ND	ND	ND	ND	ND
Benzene	9.06E-04	0.03	0.0000078	6.6E-05	5.E-07	2.1E-04	7.E-03	5.E-07	7.E-03
Bromoform	ND	NA	0.0000011	ND	ND	ND	ND	ND	ND
Ethylbenzene	9.50E-04	1	0.0000025	7.0E-05	2.E-07	2.2E-04	2.E-04	2.E-07	2.E-04
IsoPropylbenzene	ND	0.4	NA	ND	ND	ND	ND	ND	ND
trans-1,3-Dichloropropene	ND	0.02	0.000004	ND	ND	ND	ND	ND	ND
Naphthalene	5.91E-03	0.003	0.000034	4.3E-04	1.E-05	1.3E-03	4.E-01	1.E-05	4.E-01
1,3-Butadiene	2.20E-05	0.002	0.00003	1.6E-06	5.E-08	5.0E-06	3.E-03	5.E-08	3.E-03
Methyl tert-butyl ether	2.66E-04	3	0.00000026	1.9E-05	5.E-09	6.1E-05	2.E-05	5.E-09	2.E-05
1,1,2-Trichloroethane	ND	NA	0.000016	ND	ND	ND	ND	ND	ND
1,2,4-Trimethylbenzene	1.33E-03	0.007	NA	NA	NA	3.0E-04	4.E-02	NA	4.E-02
1,2-Dichloropropane	ND	0.004	0.00001	ND	ND	ND	ND	ND	ND
1,3-Dichlorobenzene	ND	0.2	NA	ND	ND	ND	ND	ND	ND
1,4-Dichlorobenzene	6.72E-03	0.8	0.000011	4.9E-04	5.E-06	1.5E-03	2.E-03	5.E-06	2.E-03
Bromodichloromethane	3.35E-05	NA	0.000037	2.5E-06	9.E-08	NA	NA	9.E-08	NA
Chlorobenzene	4.60E-05	0.05	NA	NA	NA	1.1E-05	2.E-04	NA	2.E-04
C5-C8 Aliphatic Hydrocarbons	5.50E-02	0.2	NA	NA	NA	1.3E-02	6.E-02	NA	6.E-02
C9-C12 Aliphatic Hydrocarbons	4.70E-02	0.2	NA	NA	NA	1.1E-02	5.E-02	NA	5.E-02
C9-C10 Aromatic Hydrocarbons	ND	0.05	NA	ND	ND	ND	ND	ND	ND
Total					4.E-05		7.E-01	4.E-05	7.E-01

NA - Not available
NC - Not calculated
ND - Not detected

Exposure and Risk Estimates Associated With Inhalation of Volatile Compounds in Air
UniFirst Corporation
15 Olympia Avenue, Woburn, MA
Commercial/Industrial Worker - Short Term
Indoor Air
Volatilization from Indoor Air
Warehouse
IA-10A

Receptor:	Commercial/Industrial Worker - Short
Medium of Origin:	Indoor Air
Exposure Medium:	Indoor Air
Exposure Area:	Warehouse
Depth:	NA
Duration:	NA

$$C_{air} = \frac{C_{source}}{AF}$$

$$EC_{inh} = \frac{C_{air} \times ET \times EF \times ED}{AT}$$

$$HI_{inh} = \frac{EC_{inh}}{RfC}$$

$$Risk = EC_{inh} \times URF \times CF$$

Parameter	Definition	Units	Value	Comment
ET	Indoor Air Exposure Time	hrs/d	8	
EF	Indoor Air Exposure Frequency	ds/y	250	
ED	Indoor Air Exposure Duration	y	5	
ATc	Indoor Air Averaging Time - Cancer	hrs	683280	
ATn	Indoor Air Averaging Time - Non-Cancer	hrs	43800	
CF	Conversion Factor	ug/mg	1000	

Compound	EPC Indoor Air (mg/m3)	RfC (mg/m3)	URF 1/(ug/m3)	ADE-c mg/m3	Riskinh	ADE-nc mg/m3	HIinh	Risk (Indoor Air)	HI (Indoor Air)
Chloroform	1.46E-04	0.098	0.000023	2.1E-06	5.E-08	3.3E-05	3.E-04	5.E-08	3.E-04
1,1-Dichloroethane	4.05E-05	NA	0.0000016	5.9E-07	9.E-10	NA	NA	9.E-10	NA
1,2-Dichloroethane	8.74E-04	2.4	0.000026	1.3E-05	3.E-07	2.0E-04	8.E-05	3.E-07	8.E-05
1,1-Dichloroethene	3.95E-05	0.2	NA	NA	NA	9.0E-06	5.E-05	NA	5.E-05
Tetrachloroethene	3.35E-02	0.27	0.0000059	4.9E-04	3.E-06	7.6E-03	3.E-02	3.E-06	3.E-02
Trichloroethene	2.31E-04	NA	0.000002	3.4E-06	7.E-09	NA	NA	7.E-09	NA
Vinyl chloride	ND	0.1	0.0000044	ND	ND	ND	ND	ND	ND
trans-1,2-Dichloroethene	3.95E-05	0.06	NA	NA	NA	9.0E-06	2.E-04	NA	2.E-04
cis-1,2-Dichloroethene	1.03E-04	0.035	NA	NA	NA	2.4E-05	7.E-04	NA	7.E-04
1,1,1-Trichloroethane	3.82E-04	5	NA	NA	NA	8.7E-05	2.E-05	NA	2.E-05
Methylene chloride	1.74E-03	1	0.00000047	2.5E-05	1.E-08	4.0E-04	4.E-04	1.E-08	4.E-04
Carbon tetrachloride	4.15E-04	0.1	0.000006	6.1E-06	4.E-08	9.5E-05	9.E-04	4.E-08	9.E-04
Xylenes	3.52E-03	0.1	NA	NA	NA	8.0E-04	8.E-03	NA	8.E-03
Toluene	1.29E-02	5	NA	NA	NA	2.9E-03	6.E-04	NA	6.E-04
1,2-Dibromoethane	ND	0.009	0.0006	ND	ND	ND	ND	ND	ND
Benzene	9.06E-04	0.03	0.0000078	1.3E-05	1.E-07	2.1E-04	7.E-03	1.E-07	7.E-03
Bromoform	ND	NA	0.0000011	ND	ND	ND	ND	ND	ND
Ethylbenzene	9.50E-04	1	0.0000025	1.4E-05	3.E-08	2.2E-04	2.E-04	3.E-08	2.E-04
IsoPropylbenzene	ND	0.4	NA	ND	ND	ND	ND	ND	ND
trans-1,3-Dichloropropene	ND	0.02	0.000004	ND	ND	ND	ND	ND	ND
Naphthalene	5.91E-03	0.003	0.000034	8.6E-05	3.E-06	1.3E-03	4.E-01	3.E-06	4.E-01
1,3-Butadiene	2.20E-05	0.002	0.00003	3.2E-07	1.E-08	5.0E-06	3.E-03	1.E-08	3.E-03
Methyl tert-butyl ether	2.66E-04	3	0.00000026	3.9E-06	1.E-09	6.1E-05	2.E-05	1.E-09	2.E-05
1,1,2-Trichloroethane	ND	NA	0.000016	ND	ND	ND	ND	ND	ND
1,2,4-Trimethylbenzene	1.33E-03	0.007	NA	NA	NA	3.0E-04	4.E-02	NA	4.E-02
1,2-Dichloropropane	ND	0.004	0.00001	ND	ND	ND	ND	ND	ND
1,3-Dichlorobenzene	ND	0.2	NA	ND	ND	ND	ND	ND	ND
1,4-Dichlorobenzene	6.72E-03	0.8	0.000011	9.8E-05	1.E-06	1.5E-03	2.E-03	1.E-06	2.E-03
Bromodichloromethane	3.35E-05	NA	0.000037	4.9E-07	2.E-08	NA	NA	2.E-08	NA
Chlorobenzene	4.60E-05	0.05	NA	NA	NA	1.1E-05	2.E-04	NA	2.E-04
C5-C8 Aliphatic Hydrocarbons	5.50E-02	0.2	NA	NA	NA	1.3E-02	6.E-02	NA	6.E-02
C9-C12 Aliphatic Hydrocarbons	4.70E-02	0.2	NA	NA	NA	1.1E-02	5.E-02	NA	5.E-02
C9-C10 Aromatic Hydrocarbons	ND	0.05	NA	ND	ND	ND	ND	ND	ND
Total					8.E-06		7.E-01	8.E-06	7.E-01

NA - Not available
NC - Not calculated
ND - Not detected

Exposure and Risk Estimates Associated With Inhalation of Volatile Compounds in Air
UniFirst Corporation
15 Olympia Avenue, Woburn, MA
Resident - Long Term
Indoor Air
Volatilization from Indoor Air
Warehouse
IA-10A

Receptor:	Resident - Long Term
Medium of Origin:	Indoor Air
Exposure Medium:	Indoor Air
Exposure Area:	Warehouse
Depth:	NA
Duration:	NA

$$C_{air} = \frac{C_{source}}{AF}$$

$$EC_{inh} = \frac{C_{air} \times ET \times EF \times ED}{AT}$$

$$HI_{inh} = \frac{EC_{inh}}{RfC}$$

$$Risk = EC_{inh} \times URF \times CF$$

Parameter	Definition	Units	Value	Comment
ET	Indoor Air Exposure Time	hrs/d	24	
EF	Indoor Air Exposure Frequency	ds/y	350	
ED	Indoor Air Exposure Duration	y	30	
ATc	Indoor Air Averaging Time - Cancer	hrs	683280	
ATn	Indoor Air Averaging Time - Non-Cancer	hrs	262800	
CF	Conversion Factor	ug/mg	1000	

Compound	EPC Indoor Air (mg/m3)	RfC (mg/m3)	URF 1/(ug/m3)	ADE-c mg/m3	Riskinh	ADE-nc mg/m3	HIinh	Risk (Indoor Air)	HI (Indoor Air)
Chloroform	1.46E-04	0.098	0.000023	5.4E-05	1.E-06	1.4E-04	1.E-03	1.E-06	1.E-03
1,1-Dichloroethane	4.05E-05	NA	0.0000016	1.5E-05	2.E-08	NA	NA	2.E-08	NA
1,2-Dichloroethane	8.74E-04	2.4	0.000026	3.2E-04	8.E-06	8.4E-04	3.E-04	8.E-06	3.E-04
1,1-Dichloroethene	3.95E-05	0.2	NA	NA	NA	3.8E-05	2.E-04	NA	2.E-04
Tetrachloroethene	3.35E-02	0.27	0.0000059	1.2E-02	7.E-05	3.2E-02	1.E-01	7.E-05	1.E-01
Trichloroethene	2.31E-04	NA	0.000002	8.5E-05	2.E-07	NA	NA	2.E-07	NA
Vinyl chloride	ND	0.1	0.0000044	ND	ND	ND	ND	ND	ND
trans-1,2-Dichloroethene	3.95E-05	0.06	NA	NA	NA	3.8E-05	6.E-04	NA	6.E-04
cis-1,2-Dichloroethene	1.03E-04	0.035	NA	NA	NA	9.9E-05	3.E-03	NA	3.E-03
1,1,1-Trichloroethane	3.82E-04	5	NA	NA	NA	3.7E-04	7.E-05	NA	7.E-05
Methylene chloride	1.74E-03	1	0.00000047	6.4E-04	3.E-07	1.7E-03	2.E-03	3.E-07	2.E-03
Carbon tetrachloride	4.15E-04	0.1	0.000006	1.5E-04	9.E-07	4.0E-04	4.E-03	9.E-07	4.E-03
Xylenes	3.52E-03	0.1	NA	NA	NA	3.4E-03	3.E-02	NA	3.E-02
Toluene	1.29E-02	5	NA	NA	NA	1.2E-02	2.E-03	NA	2.E-03
1,2-Dibromoethane	ND	0.009	0.0006	ND	ND	ND	ND	ND	ND
Benzene	9.06E-04	0.03	0.0000078	3.3E-04	3.E-06	8.7E-04	3.E-02	3.E-06	3.E-02
Bromoform	ND	NA	0.0000011	ND	ND	ND	ND	ND	ND
Ethylbenzene	9.50E-04	1	0.0000025	3.5E-04	9.E-07	9.1E-04	9.E-04	9.E-07	9.E-04
IsoPropylbenzene	ND	0.4	NA	ND	ND	ND	ND	ND	ND
trans-1,3-Dichloropropene	ND	0.02	0.000004	ND	ND	ND	ND	ND	ND
Naphthalene	5.91E-03	0.003	0.000034	2.2E-03	7.E-05	5.7E-03	2.E+00	7.E-05	2.E+00
1,3-Butadiene	2.20E-05	0.002	0.00003	8.1E-06	2.E-07	2.1E-05	1.E-02	2.E-07	1.E-02
Methyl tert-butyl ether	2.66E-04	3	0.00000026	9.8E-05	3.E-08	2.6E-04	9.E-05	3.E-08	9.E-05
1,1,2-Trichloroethane	ND	NA	0.000016	ND	ND	ND	ND	ND	ND
1,2,4-Trimethylbenzene	1.33E-03	0.007	NA	NA	NA	1.3E-03	2.E-01	NA	2.E-01
1,2-Dichloropropane	ND	0.004	0.00001	ND	ND	ND	ND	ND	ND
1,3-Dichlorobenzene	ND	0.2	NA	ND	ND	ND	ND	ND	ND
1,4-Dichlorobenzene	6.72E-03	0.8	0.000011	2.5E-03	3.E-05	6.4E-03	8.E-03	3.E-05	8.E-03
Bromodichloromethane	3.35E-05	NA	0.000037	1.2E-05	5.E-07	NA	NA	5.E-07	NA
Chlorobenzene	4.60E-05	0.05	NA	NA	NA	4.4E-05	9.E-04	NA	9.E-04
C5-C8 Aliphatic Hydrocarbons	5.50E-02	0.2	NA	NA	NA	5.3E-02	3.E-01	NA	3.E-01
C9-C12 Aliphatic Hydrocarbons	4.70E-02	0.2	NA	NA	NA	4.5E-02	2.E-01	NA	2.E-01
C9-C10 Aromatic Hydrocarbons	ND	0.05	NA	ND	ND	ND	ND	ND	ND
Total					2.E-04		3.E+00	2.E-04	3.E+00

NA - Not available
NC - Not calculated
ND - Not detected

Exposure and Risk Estimates Associated With Inhalation of Volatile Compounds in Air
UniFirst Corporation
15 Olympia Avenue, Woburn, MA
Storage User - Long Term - Warehouse
Indoor Air
Volatilization from Indoor Air
Warehouse
IA-11

Receptor:	Storage User - Long Term - Warehou
Medium of Origin:	Indoor Air
Exposure Medium:	Indoor Air
Exposure Area:	Warehouse
Depth:	NA
Duration:	NA

$$C_{air} = \frac{C_{source}}{AF}$$

$$EC_{inh} = \frac{C_{air} \times ET \times EF \times ED}{AT}$$

$$HI_{inh} = \frac{EC_{inh}}{RfC}$$

$$Risk = EC_{inh} \times URF \times CF$$

Parameter	Definition	Units	Value	Comment
ET	Indoor Air Exposure Time	hrs/d	3	
EF	Indoor Air Exposure Frequency	ds/y	250	
ED	Indoor Air Exposure Duration	y	25	
ATc	Indoor Air Averaging Time - Cancer	hrs	683280	
ATn	Indoor Air Averaging Time - Non-Cancer	hrs	219000	
CF	Conversion Factor	ug/mg	1000	

Compound	EPC Indoor Air (mg/m3)	RfC (mg/m3)	URF 1/(ug/m3)	ADE-c mg/m3	Riskinh	ADE-nc mg/m3	HIinh	Risk (Indoor Air)	HI (Indoor Air)
Chloroform	1.44E-04	0.098	0.000023	3.9E-06	9.E-08	1.2E-05	1.E-04	9.E-08	1.E-04
1,1-Dichloroethane	4.05E-05	NA	0.0000016	1.1E-06	2.E-09	NA	NA	2.E-09	NA
1,2-Dichloroethane	1.36E-04	2.4	0.000026	3.7E-06	1.E-07	1.2E-05	5.E-06	1.E-07	5.E-06
1,1-Dichloroethene	3.95E-05	0.2	NA	NA	NA	3.4E-06	2.E-05	NA	2.E-05
Tetrachloroethene	1.85E-02	0.27	0.0000059	5.1E-04	3.E-06	1.6E-03	6.E-03	3.E-06	6.E-03
Trichloroethene	5.13E-04	NA	0.000002	1.4E-05	3.E-08	NA	NA	3.E-08	NA
Vinyl chloride	ND	0.1	0.0000044	ND	ND	ND	ND	ND	ND
trans-1,2-Dichloroethene	3.95E-05	0.06	NA	NA	NA	3.4E-06	6.E-05	NA	6.E-05
cis-1,2-Dichloroethene	1.58E-04	0.035	NA	NA	NA	1.4E-05	4.E-04	NA	4.E-04
1,1,1-Trichloroethane	7.69E-04	5	NA	NA	NA	6.6E-05	1.E-05	NA	1.E-05
Methylene chloride	8.70E-04	1	0.00000047	2.4E-05	1.E-08	7.4E-05	7.E-05	1.E-08	7.E-05
Carbon tetrachloride	4.40E-04	0.1	0.000006	1.2E-05	7.E-08	3.8E-05	4.E-04	7.E-08	4.E-04
Xylenes	1.59E-03	0.1	NA	NA	NA	1.4E-04	1.E-03	NA	1.E-03
Toluene	2.74E-03	5	NA	NA	NA	2.3E-04	5.E-05	NA	5.E-05
1,2-Dibromoethane	ND	0.009	0.0006	ND	ND	ND	ND	ND	ND
Benzene	8.08E-04	0.03	0.0000078	2.2E-05	2.E-07	6.9E-05	2.E-03	2.E-07	2.E-03
Bromoform	ND	NA	0.0000011	ND	ND	ND	ND	ND	ND
Ethylbenzene	4.39E-04	1	0.0000025	1.2E-05	3.E-08	3.8E-05	4.E-05	3.E-08	4.E-05
IsoPropylbenzene	ND	0.4	NA	ND	ND	ND	ND	ND	ND
trans-1,3-Dichloropropene	ND	0.02	0.000004	ND	ND	ND	ND	ND	ND
Naphthalene	1.10E-03	0.003	0.000034	3.0E-05	1.E-06	9.4E-05	3.E-02	1.E-06	3.E-02
1,3-Butadiene	9.30E-05	0.002	0.00003	2.6E-06	8.E-08	8.0E-06	4.E-03	8.E-08	4.E-03
Methyl tert-butyl ether	3.60E-05	3	0.00000026	9.9E-07	3.E-10	3.1E-06	1.E-06	3.E-10	1.E-06
1,1,2-Trichloroethane	ND	NA	0.000016	ND	ND	ND	ND	ND	ND
1,2,4-Trimethylbenzene	3.93E-04	0.007	NA	NA	NA	3.4E-05	5.E-03	NA	5.E-03
1,2-Dichloropropane	ND	0.004	0.00001	ND	ND	ND	ND	ND	ND
1,3-Dichlorobenzene	ND	0.2	NA	ND	ND	ND	ND	ND	ND
1,4-Dichlorobenzene	2.94E-04	0.8	0.000011	8.1E-06	9.E-08	2.5E-05	3.E-05	9.E-08	3.E-05
Bromodichloromethane	3.35E-05	NA	0.000037	9.2E-07	3.E-08	NA	NA	3.E-08	NA
Chlorobenzene	4.60E-05	0.05	NA	NA	NA	3.9E-06	8.E-05	NA	8.E-05
C5-C8 Aliphatic Hydrocarbons	1.70E-02	0.2	NA	NA	NA	1.5E-03	7.E-03	NA	7.E-03
C9-C12 Aliphatic Hydrocarbons	7.00E-03	0.2	NA	NA	NA	6.0E-04	3.E-03	NA	3.E-03
C9-C10 Aromatic Hydrocarbons	ND	0.05	NA	ND	ND	ND	ND	ND	ND
Total					5.E-06		6.E-02	5.E-06	6.E-02

NA - Not available
NC - Not calculated
ND - Not detected

Exposure and Risk Estimates Associated With Inhalation of Volatile Compounds in Air
UniFirst Corporation
15 Olympia Avenue, Woburn, MA
Storage User - Short Term - Warehouse
Indoor Air
Volatilization from Indoor Air
Warehouse
IA-11

Receptor:	Storage User - Short Term - Warehou
Medium of Origin:	Indoor Air
Exposure Medium:	Indoor Air
Exposure Area:	Warehouse
Depth:	NA
Duration:	NA

$$C_{air} = \frac{C_{source}}{AF}$$

$$EC_{inh} = \frac{C_{air} \times ET \times EF \times ED}{AT}$$

$$HI_{inh} = \frac{EC_{inh}}{RfC}$$

$$Risk = EC_{inh} \times URF \times CF$$

Parameter	Definition	Units	Value	Comment
ET	Indoor Air Exposure Time	hrs/d	3	
EF	Indoor Air Exposure Frequency	ds/y	250	
ED	Indoor Air Exposure Duration	y	5	
ATc	Indoor Air Averaging Time - Cancer	hrs	683280	
ATn	Indoor Air Averaging Time - Non-Cancer	hrs	43800	
CF	Conversion Factor	ug/mg	1000	

Compound	EPC Indoor Air (mg/m3)	RfC (mg/m3)	URF 1/(ug/m3)	ADE-c mg/m3	Riskinh	ADE-nc mg/m3	HIinh	Risk (Indoor Air)	HI (Indoor Air)
Chloroform	1.44E-04	0.098	0.000023	7.9E-07	2.E-08	1.2E-05	1.E-04	2.E-08	1.E-04
1,1-Dichloroethane	4.05E-05	NA	0.0000016	2.2E-07	4.E-10	NA	NA	4.E-10	NA
1,2-Dichloroethane	1.36E-04	2.4	0.000026	7.4E-07	2.E-08	1.2E-05	5.E-06	2.E-08	5.E-06
1,1-Dichloroethene	3.95E-05	0.2	NA	NA	NA	3.4E-06	2.E-05	NA	2.E-05
Tetrachloroethene	1.85E-02	0.27	0.0000059	1.0E-04	6.E-07	1.6E-03	6.E-03	6.E-07	6.E-03
Trichloroethene	5.13E-04	NA	0.000002	2.8E-06	6.E-09	NA	NA	6.E-09	NA
Vinyl chloride	ND	0.1	0.0000044	ND	ND	ND	ND	ND	ND
trans-1,2-Dichloroethene	3.95E-05	0.06	NA	NA	NA	3.4E-06	6.E-05	NA	6.E-05
cis-1,2-Dichloroethene	1.58E-04	0.035	NA	NA	NA	1.4E-05	4.E-04	NA	4.E-04
1,1,1-Trichloroethane	7.69E-04	5	NA	NA	NA	6.6E-05	1.E-05	NA	1.E-05
Methylene chloride	8.70E-04	1	0.00000047	4.8E-06	2.E-09	7.4E-05	7.E-05	2.E-09	7.E-05
Carbon tetrachloride	4.40E-04	0.1	0.000006	2.4E-06	1.E-08	3.8E-05	4.E-04	1.E-08	4.E-04
Xylenes	1.59E-03	0.1	NA	NA	NA	1.4E-04	1.E-03	NA	1.E-03
Toluene	2.74E-03	5	NA	NA	NA	2.3E-04	5.E-05	NA	5.E-05
1,2-Dibromoethane	ND	0.009	0.0006	ND	ND	ND	ND	ND	ND
Benzene	8.08E-04	0.03	0.0000078	4.4E-06	3.E-08	6.9E-05	2.E-03	3.E-08	2.E-03
Bromoform	ND	NA	0.0000011	ND	ND	ND	ND	ND	ND
Ethylbenzene	4.39E-04	1	0.0000025	2.4E-06	6.E-09	3.8E-05	4.E-05	6.E-09	4.E-05
IsoPropylbenzene	ND	0.4	NA	ND	ND	ND	ND	ND	ND
trans-1,3-Dichloropropene	ND	0.02	0.000004	ND	ND	ND	ND	ND	ND
Naphthalene	1.10E-03	0.003	0.000034	6.0E-06	2.E-07	9.4E-05	3.E-02	2.E-07	3.E-02
1,3-Butadiene	9.30E-05	0.002	0.00003	5.1E-07	2.E-08	8.0E-06	4.E-03	2.E-08	4.E-03
Methyl tert-butyl ether	3.60E-05	3	0.00000026	2.0E-07	5.E-11	3.1E-06	1.E-06	5.E-11	1.E-06
1,1,2-Trichloroethane	ND	NA	0.000016	ND	ND	ND	ND	ND	ND
1,2,4-Trimethylbenzene	3.93E-04	0.007	NA	NA	NA	3.4E-05	5.E-03	NA	5.E-03
1,2-Dichloropropane	ND	0.004	0.00001	ND	ND	ND	ND	ND	ND
1,3-Dichlorobenzene	ND	0.2	NA	ND	ND	ND	ND	ND	ND
1,4-Dichlorobenzene	2.94E-04	0.8	0.000011	1.6E-06	2.E-08	2.5E-05	3.E-05	2.E-08	3.E-05
Bromodichloromethane	3.35E-05	NA	0.000037	1.8E-07	7.E-09	NA	NA	7.E-09	NA
Chlorobenzene	4.60E-05	0.05	NA	NA	NA	3.9E-06	8.E-05	NA	8.E-05
C5-C8 Aliphatic Hydrocarbons	1.70E-02	0.2	NA	NA	NA	1.5E-03	7.E-03	NA	7.E-03
C9-C12 Aliphatic Hydrocarbons	7.00E-03	0.2	NA	NA	NA	6.0E-04	3.E-03	NA	3.E-03
C9-C10 Aromatic Hydrocarbons	ND	0.05	NA	ND	ND	ND	ND	ND	ND
Total					9.E-07		6.E-02	9.E-07	6.E-02

NA - Not available
NC - Not calculated
ND - Not detected

Exposure and Risk Estimates Associated With Inhalation of Volatile Compounds in Air
UniFirst Corporation
15 Olympia Avenue, Woburn, MA
Commercial/Industrial Worker - Long Term
Indoor Air
Volatilization from Indoor Air
Warehouse
IA-11

Receptor:	Commercial/Industrial Worker - Long
Medium of Origin:	Indoor Air
Exposure Medium:	Indoor Air
Exposure Area:	Warehouse
Depth:	NA
Duration:	NA

$$C_{air} = \frac{C_{source}}{AF}$$

$$EC_{inh} = \frac{C_{air} \times ET \times EF \times ED}{AT}$$

$$HI_{inh} = \frac{EC_{inh}}{RfC}$$

$$Risk = EC_{inh} \times URF \times CF$$

Parameter	Definition	Units	Value	Comment
ET	Indoor Air Exposure Time	hrs/d	8	
EF	Indoor Air Exposure Frequency	ds/y	250	
ED	Indoor Air Exposure Duration	y	25	
ATc	Indoor Air Averaging Time - Cancer	hrs	683280	
ATn	Indoor Air Averaging Time - Non-Cancer	hrs	219000	
CF	Conversion Factor	ug/mg	1000	

Compound	EPC Indoor Air (mg/m3)	RfC (mg/m3)	URF 1/(ug/m3)	ADE-c mg/m3	Riskinh	ADE-nc mg/m3	HIinh	Risk (Indoor Air)	HI (Indoor Air)
Chloroform	1.44E-04	0.098	0.000023	1.1E-05	2.E-07	3.3E-05	3.E-04	2.E-07	3.E-04
1,1-Dichloroethane	4.05E-05	NA	0.0000016	3.0E-06	5.E-09	NA	NA	5.E-09	NA
1,2-Dichloroethane	1.36E-04	2.4	0.000026	9.9E-06	3.E-07	3.1E-05	1.E-05	3.E-07	1.E-05
1,1-Dichloroethene	3.95E-05	0.2	NA	NA	NA	9.0E-06	5.E-05	NA	5.E-05
Tetrachloroethene	1.85E-02	0.27	0.0000059	1.4E-03	8.E-06	4.2E-03	2.E-02	8.E-06	2.E-02
Trichloroethene	5.13E-04	NA	0.000002	3.8E-05	8.E-08	NA	NA	8.E-08	NA
Vinyl chloride	ND	0.1	0.0000044	ND	ND	ND	ND	ND	ND
trans-1,2-Dichloroethene	3.95E-05	0.06	NA	NA	NA	9.0E-06	2.E-04	NA	2.E-04
cis-1,2-Dichloroethene	1.58E-04	0.035	NA	NA	NA	3.6E-05	1.E-03	NA	1.E-03
1,1,1-Trichloroethane	7.69E-04	5	NA	NA	NA	1.8E-04	4.E-05	NA	4.E-05
Methylene chloride	8.70E-04	1	0.00000047	6.4E-05	3.E-08	2.0E-04	2.E-04	3.E-08	2.E-04
Carbon tetrachloride	4.40E-04	0.1	0.000006	3.2E-05	2.E-07	1.0E-04	1.E-03	2.E-07	1.E-03
Xylenes	1.59E-03	0.1	NA	NA	NA	3.6E-04	4.E-03	NA	4.E-03
Toluene	2.74E-03	5	NA	NA	NA	6.3E-04	1.E-04	NA	1.E-04
1,2-Dibromoethane	ND	0.009	0.0006	ND	ND	ND	ND	ND	ND
Benzene	8.08E-04	0.03	0.0000078	5.9E-05	5.E-07	1.8E-04	6.E-03	5.E-07	6.E-03
Bromoform	ND	NA	0.0000011	ND	ND	ND	ND	ND	ND
Ethylbenzene	4.39E-04	1	0.0000025	3.2E-05	8.E-08	1.0E-04	1.E-04	8.E-08	1.E-04
IsoPropylbenzene	ND	0.4	NA	ND	ND	ND	ND	ND	ND
trans-1,3-Dichloropropene	ND	0.02	0.000004	ND	ND	ND	ND	ND	ND
Naphthalene	1.10E-03	0.003	0.000034	8.1E-05	3.E-06	2.5E-04	8.E-02	3.E-06	8.E-02
1,3-Butadiene	9.30E-05	0.002	0.00003	6.8E-06	2.E-07	2.1E-05	1.E-02	2.E-07	1.E-02
Methyl tert-butyl ether	3.60E-05	3	0.00000026	2.6E-06	7.E-10	8.2E-06	3.E-06	7.E-10	3.E-06
1,1,2-Trichloroethane	ND	NA	0.000016	ND	ND	ND	ND	ND	ND
1,2,4-Trimethylbenzene	3.93E-04	0.007	NA	NA	NA	9.0E-05	1.E-02	NA	1.E-02
1,2-Dichloropropane	ND	0.004	0.00001	ND	ND	ND	ND	ND	ND
1,3-Dichlorobenzene	ND	0.2	NA	ND	ND	ND	ND	ND	ND
1,4-Dichlorobenzene	2.94E-04	0.8	0.000011	2.2E-05	2.E-07	6.7E-05	8.E-05	2.E-07	8.E-05
Bromodichloromethane	3.35E-05	NA	0.000037	2.5E-06	9.E-08	NA	NA	9.E-08	NA
Chlorobenzene	4.60E-05	0.05	NA	NA	NA	1.1E-05	2.E-04	NA	2.E-04
C5-C8 Aliphatic Hydrocarbons	1.70E-02	0.2	NA	NA	NA	3.9E-03	2.E-02	NA	2.E-02
C9-C12 Aliphatic Hydrocarbons	7.00E-03	0.2	NA	NA	NA	1.6E-03	8.E-03	NA	8.E-03
C9-C10 Aromatic Hydrocarbons	ND	0.05	NA	ND	ND	ND	ND	ND	ND
Total					1.E-05		2.E-01	1.E-05	2.E-01

NA - Not available
NC - Not calculated
ND - Not detected

Exposure and Risk Estimates Associated With Inhalation of Volatile Compounds in Air
UniFirst Corporation
15 Olympia Avenue, Woburn, MA
Commercial/Industrial Worker - Short Term
Indoor Air
Volatilization from Indoor Air
Warehouse
IA-11

Receptor:	Commercial/Industrial Worker - Short
Medium of Origin:	Indoor Air
Exposure Medium:	Indoor Air
Exposure Area:	Warehouse
Depth:	NA
Duration:	NA

$$C_{air} = \frac{C_{source}}{AF}$$

$$EC_{inh} = \frac{C_{air} \times ET \times EF \times ED}{AT}$$

$$HI_{inh} = \frac{EC_{inh}}{RfC}$$

$$Risk = EC_{inh} \times URF \times CF$$

Parameter	Definition	Units	Value	Comment
ET	Indoor Air Exposure Time	hrs/d	8	
EF	Indoor Air Exposure Frequency	ds/y	250	
ED	Indoor Air Exposure Duration	y	5	
ATc	Indoor Air Averaging Time - Cancer	hrs	683280	
ATn	Indoor Air Averaging Time - Non-Cancer	hrs	43800	
CF	Conversion Factor	ug/mg	1000	

Compound	EPC Indoor Air (mg/m3)	RfC (mg/m3)	URF 1/(ug/m3)	ADE-c mg/m3	Riskinh	ADE-nc mg/m3	HIinh	Risk (Indoor Air)	HI (Indoor Air)
Chloroform	1.44E-04	0.098	0.000023	2.1E-06	5.E-08	3.3E-05	3.E-04	5.E-08	3.E-04
1,1-Dichloroethane	4.05E-05	NA	0.0000016	5.9E-07	9.E-10	NA	NA	9.E-10	NA
1,2-Dichloroethane	1.36E-04	2.4	0.000026	2.0E-06	5.E-08	3.1E-05	1.E-05	5.E-08	1.E-05
1,1-Dichloroethene	3.95E-05	0.2	NA	NA	NA	9.0E-06	5.E-05	NA	5.E-05
Tetrachloroethene	1.85E-02	0.27	0.0000059	2.7E-04	2.E-06	4.2E-03	2.E-02	2.E-06	2.E-02
Trichloroethene	5.13E-04	NA	0.000002	7.5E-06	2.E-08	NA	NA	2.E-08	NA
Vinyl chloride	ND	0.1	0.0000044	ND	ND	ND	ND	ND	ND
trans-1,2-Dichloroethene	3.95E-05	0.06	NA	NA	NA	9.0E-06	2.E-04	NA	2.E-04
cis-1,2-Dichloroethene	1.58E-04	0.035	NA	NA	NA	3.6E-05	1.E-03	NA	1.E-03
1,1,1-Trichloroethane	7.69E-04	5	NA	NA	NA	1.8E-04	4.E-05	NA	4.E-05
Methylene chloride	8.70E-04	1	0.00000047	1.3E-05	6.E-09	2.0E-04	2.E-04	6.E-09	2.E-04
Carbon tetrachloride	4.40E-04	0.1	0.000006	6.4E-06	4.E-08	1.0E-04	1.E-03	4.E-08	1.E-03
Xylenes	1.59E-03	0.1	NA	NA	NA	3.6E-04	4.E-03	NA	4.E-03
Toluene	2.74E-03	5	NA	NA	NA	6.3E-04	1.E-04	NA	1.E-04
1,2-Dibromoethane	ND	0.009	0.0006	ND	ND	ND	ND	ND	ND
Benzene	8.08E-04	0.03	0.0000078	1.2E-05	9.E-08	1.8E-04	6.E-03	9.E-08	6.E-03
Bromoform	ND	NA	0.0000011	ND	ND	ND	ND	ND	ND
Ethylbenzene	4.39E-04	1	0.0000025	6.4E-06	2.E-08	1.0E-04	1.E-04	2.E-08	1.E-04
IsoPropylbenzene	ND	0.4	NA	ND	ND	ND	ND	ND	ND
trans-1,3-Dichloropropene	ND	0.02	0.000004	ND	ND	ND	ND	ND	ND
Naphthalene	1.10E-03	0.003	0.000034	1.6E-05	5.E-07	2.5E-04	8.E-02	5.E-07	8.E-02
1,3-Butadiene	9.30E-05	0.002	0.00003	1.4E-06	4.E-08	2.1E-05	1.E-02	4.E-08	1.E-02
Methyl tert-butyl ether	3.60E-05	3	0.00000026	5.3E-07	1.E-10	8.2E-06	3.E-06	1.E-10	3.E-06
1,1,2-Trichloroethane	ND	NA	0.000016	ND	ND	ND	ND	ND	ND
1,2,4-Trimethylbenzene	3.93E-04	0.007	NA	NA	NA	9.0E-05	1.E-02	NA	1.E-02
1,2-Dichloropropane	ND	0.004	0.00001	ND	ND	ND	ND	ND	ND
1,3-Dichlorobenzene	ND	0.2	NA	ND	ND	ND	ND	ND	ND
1,4-Dichlorobenzene	2.94E-04	0.8	0.000011	4.3E-06	5.E-08	6.7E-05	8.E-05	5.E-08	8.E-05
Bromodichloromethane	3.35E-05	NA	0.000037	4.9E-07	2.E-08	NA	NA	2.E-08	NA
Chlorobenzene	4.60E-05	0.05	NA	NA	NA	1.1E-05	2.E-04	NA	2.E-04
C5-C8 Aliphatic Hydrocarbons	1.70E-02	0.2	NA	NA	NA	3.9E-03	2.E-02	NA	2.E-02
C9-C12 Aliphatic Hydrocarbons	7.00E-03	0.2	NA	NA	NA	1.6E-03	8.E-03	NA	8.E-03
C9-C10 Aromatic Hydrocarbons	ND	0.05	NA	ND	ND	ND	ND	ND	ND
Total					3.E-06		2.E-01	3.E-06	2.E-01

NA - Not available
NC - Not calculated
ND - Not detected

Exposure and Risk Estimates Associated With Inhalation of Volatile Compounds in Air
UniFirst Corporation
15 Olympia Avenue, Woburn, MA
Resident - Long Term
Indoor Air
Volatilization from Indoor Air
Warehouse
IA-11

Receptor:	Resident - Long Term
Medium of Origin:	Indoor Air
Exposure Medium:	Indoor Air
Exposure Area:	Warehouse
Depth:	NA
Duration:	NA

$$C_{air} = \frac{C_{source}}{AF}$$

$$EC_{inh} = \frac{C_{air} \times ET \times EF \times ED}{AT}$$

$$HI_{inh} = \frac{EC_{inh}}{RfC}$$

$$Risk = EC_{inh} \times URF \times CF$$

Parameter	Definition	Units	Value	Comment
ET	Indoor Air Exposure Time	hrs/d	24	
EF	Indoor Air Exposure Frequency	ds/y	350	
ED	Indoor Air Exposure Duration	y	30	
ATc	Indoor Air Averaging Time - Cancer	hrs	683280	
ATn	Indoor Air Averaging Time - Non-Cancer	hrs	262800	
CF	Conversion Factor	ug/mg	1000	

Compound	EPC Indoor Air (mg/m3)	RfC (mg/m3)	URF 1/(ug/m3)	ADE-c mg/m3	Riskinh	ADE-nc mg/m3	HIinh	Risk (Indoor Air)	HI (Indoor Air)
Chloroform	1.44E-04	0.098	0.000023	5.3E-05	1.E-06	1.4E-04	1.E-03	1.E-06	1.E-03
1,1-Dichloroethane	4.05E-05	NA	0.0000016	1.5E-05	2.E-08	NA	NA	2.E-08	NA
1,2-Dichloroethane	1.36E-04	2.4	0.000026	5.0E-05	1.E-06	1.3E-04	5.E-05	1.E-06	5.E-05
1,1-Dichloroethene	3.95E-05	0.2	NA	NA	NA	3.8E-05	2.E-04	NA	2.E-04
Tetrachloroethene	1.85E-02	0.27	0.0000059	6.8E-03	4.E-05	1.8E-02	7.E-02	4.E-05	7.E-02
Trichloroethene	5.13E-04	NA	0.000002	1.9E-04	4.E-07	NA	NA	4.E-07	NA
Vinyl chloride	ND	0.1	0.0000044	ND	ND	ND	ND	ND	ND
trans-1,2-Dichloroethene	3.95E-05	0.06	NA	NA	NA	3.8E-05	6.E-04	NA	6.E-04
cis-1,2-Dichloroethene	1.58E-04	0.035	NA	NA	NA	1.5E-04	4.E-03	NA	4.E-03
1,1,1-Trichloroethane	7.69E-04	5	NA	NA	NA	7.4E-04	1.E-04	NA	1.E-04
Methylene chloride	8.70E-04	1	0.00000047	3.2E-04	2.E-07	8.3E-04	8.E-04	2.E-07	8.E-04
Carbon tetrachloride	4.40E-04	0.1	0.000006	1.6E-04	1.E-06	4.2E-04	4.E-03	1.E-06	4.E-03
Xylenes	1.59E-03	0.1	NA	NA	NA	1.5E-03	2.E-02	NA	2.E-02
Toluene	2.74E-03	5	NA	NA	NA	2.6E-03	5.E-04	NA	5.E-04
1,2-Dibromoethane	ND	0.009	0.0006	ND	ND	ND	ND	ND	ND
Benzene	8.08E-04	0.03	0.0000078	3.0E-04	2.E-06	7.7E-04	3.E-02	2.E-06	3.E-02
Bromoform	ND	NA	0.0000011	ND	ND	ND	ND	ND	ND
Ethylbenzene	4.39E-04	1	0.0000025	1.6E-04	4.E-07	4.2E-04	4.E-04	4.E-07	4.E-04
IsoPropylbenzene	ND	0.4	NA	ND	ND	ND	ND	ND	ND
trans-1,3-Dichloropropene	ND	0.02	0.000004	ND	ND	ND	ND	ND	ND
Naphthalene	1.10E-03	0.003	0.000034	4.1E-04	1.E-05	1.1E-03	4.E-01	1.E-05	4.E-01
1,3-Butadiene	9.30E-05	0.002	0.00003	3.4E-05	1.E-06	8.9E-05	4.E-02	1.E-06	4.E-02
Methyl tert-butyl ether	3.60E-05	3	0.00000026	1.3E-05	3.E-09	3.5E-05	1.E-05	3.E-09	1.E-05
1,1,2-Trichloroethane	ND	NA	0.000016	ND	ND	ND	ND	ND	ND
1,2,4-Trimethylbenzene	3.93E-04	0.007	NA	NA	NA	3.8E-04	5.E-02	NA	5.E-02
1,2-Dichloropropane	ND	0.004	0.00001	ND	ND	ND	ND	ND	ND
1,3-Dichlorobenzene	ND	0.2	NA	ND	ND	ND	ND	ND	ND
1,4-Dichlorobenzene	2.94E-04	0.8	0.000011	1.1E-04	1.E-06	2.8E-04	4.E-04	1.E-06	4.E-04
Bromodichloromethane	3.35E-05	NA	0.000037	1.2E-05	5.E-07	NA	NA	5.E-07	NA
Chlorobenzene	4.60E-05	0.05	NA	NA	NA	4.4E-05	9.E-04	NA	9.E-04
C5-C8 Aliphatic Hydrocarbons	1.70E-02	0.2	NA	NA	NA	1.6E-02	8.E-02	NA	8.E-02
C9-C12 Aliphatic Hydrocarbons	7.00E-03	0.2	NA	NA	NA	6.7E-03	3.E-02	NA	3.E-02
C9-C10 Aromatic Hydrocarbons	ND	0.05	NA	ND	ND	ND	ND	ND	ND
Total					6.E-05		7.E-01	6.E-05	7.E-01

NA - Not available
NC - Not calculated
ND - Not detected

Exposure and Risk Estimates Associated With Inhalation of Volatile Compounds in Air
UniFirst Corporation
15 Olympia Avenue, Woburn, MA
Storage User - Long Term - Warehouse
Indoor Air
Volatilization from Indoor Air
Warehouse
IA-12

Receptor:	Storage User - Long Term - Warehou
Medium of Origin:	Indoor Air
Exposure Medium:	Indoor Air
Exposure Area:	Warehouse
Depth:	NA
Duration:	NA

$$C_{air} = \frac{C_{source}}{AF}$$

$$EC_{inh} = \frac{C_{air} \times ET \times EF \times ED}{AT}$$

$$HI_{inh} = \frac{EC_{inh}}{RfC}$$

$$Risk = EC_{inh} \times URF \times CF$$

Parameter	Definition	Units	Value	Comment
ET	Indoor Air Exposure Time	hrs/d	3	
EF	Indoor Air Exposure Frequency	ds/y	250	
ED	Indoor Air Exposure Duration	y	25	
ATc	Indoor Air Averaging Time - Cancer	hrs	683280	
ATn	Indoor Air Averaging Time - Non-Cancer	hrs	219000	
CF	Conversion Factor	ug/mg	1000	

Compound	EPC Indoor Air (mg/m3)	RfC (mg/m3)	URF 1/(ug/m3)	ADE-c mg/m3	Riskinh	ADE-nc mg/m3	HIinh	Risk (Indoor Air)	HI (Indoor Air)
Chloroform	1.56E-04	0.098	0.000023	4.3E-06	1.E-07	1.3E-05	1.E-04	1.E-07	1.E-04
1,1-Dichloroethane	4.05E-05	NA	0.0000016	1.1E-06	2.E-09	NA	NA	2.E-09	NA
1,2-Dichloroethane	5.42E-04	2.4	0.000026	1.5E-05	4.E-07	4.6E-05	2.E-05	4.E-07	2.E-05
1,1-Dichloroethene	3.95E-05	0.2	NA	NA	NA	3.4E-06	2.E-05	NA	2.E-05
Tetrachloroethene	4.50E-02	0.27	0.0000059	1.2E-03	7.E-06	3.9E-03	1.E-02	7.E-06	1.E-02
Trichloroethene	2.20E-04	NA	0.000002	6.0E-06	1.E-08	NA	NA	1.E-08	NA
Vinyl chloride	ND	0.1	0.0000044	ND	ND	ND	ND	ND	ND
trans-1,2-Dichloroethene	3.95E-05	0.06	NA	NA	NA	3.4E-06	6.E-05	NA	6.E-05
cis-1,2-Dichloroethene	3.95E-05	0.035	NA	NA	NA	3.4E-06	1.E-04	NA	1.E-04
1,1,1-Trichloroethane	4.69E-04	5	NA	NA	NA	4.0E-05	8.E-06	NA	8.E-06
Methylene chloride	8.70E-04	1	0.00000047	2.4E-05	1.E-08	7.4E-05	7.E-05	1.E-08	7.E-05
Carbon tetrachloride	4.34E-04	0.1	0.000006	1.2E-05	7.E-08	3.7E-05	4.E-04	7.E-08	4.E-04
Xylenes	3.14E-03	0.1	NA	NA	NA	2.7E-04	3.E-03	NA	3.E-03
Toluene	7.98E-03	5	NA	NA	NA	6.8E-04	1.E-04	NA	1.E-04
1,2-Dibromoethane	ND	0.009	0.0006	ND	ND	ND	ND	ND	ND
Benzene	1.06E-03	0.03	0.0000078	2.9E-05	2.E-07	9.1E-05	3.E-03	2.E-07	3.E-03
Bromoform	ND	NA	0.0000011	ND	ND	ND	ND	ND	ND
Ethylbenzene	8.33E-04	1	0.0000025	2.3E-05	6.E-08	7.1E-05	7.E-05	6.E-08	7.E-05
IsoPropylbenzene	ND	0.4	NA	ND	ND	ND	ND	ND	ND
trans-1,3-Dichloropropene	ND	0.02	0.000004	ND	ND	ND	ND	ND	ND
Naphthalene	3.73E-03	0.003	0.000034	1.0E-04	3.E-06	3.2E-04	1.E-01	3.E-06	1.E-01
1,3-Butadiene	6.90E-05	0.002	0.00003	1.9E-06	6.E-08	5.9E-06	3.E-03	6.E-08	3.E-03
Methyl tert-butyl ether	1.30E-04	3	0.00000026	3.6E-06	9.E-10	1.1E-05	4.E-06	9.E-10	4.E-06
1,1,2-Trichloroethane	ND	NA	0.000016	ND	ND	ND	ND	ND	ND
1,2,4-Trimethylbenzene	1.22E-03	0.007	NA	NA	NA	1.0E-04	1.E-02	NA	1.E-02
1,2-Dichloropropane	ND	0.004	0.00001	ND	ND	ND	ND	ND	ND
1,3-Dichlorobenzene	ND	0.2	NA	ND	ND	ND	ND	ND	ND
1,4-Dichlorobenzene	2.27E-03	0.8	0.000011	6.2E-05	7.E-07	1.9E-04	2.E-04	7.E-07	2.E-04
Bromodichloromethane	3.35E-05	NA	0.000037	9.2E-07	3.E-08	NA	NA	3.E-08	NA
Chlorobenzene	4.60E-05	0.05	NA	NA	NA	3.9E-06	8.E-05	NA	8.E-05
C5-C8 Aliphatic Hydrocarbons	4.80E-02	0.2	NA	NA	NA	4.1E-03	2.E-02	NA	2.E-02
C9-C12 Aliphatic Hydrocarbons	5.80E-02	0.2	NA	NA	NA	5.0E-03	2.E-02	NA	2.E-02
C9-C10 Aromatic Hydrocarbons	ND	0.05	NA	ND	ND	ND	ND	ND	ND
Total					1.E-05		2.E-01	1.E-05	2.E-01

NA - Not available
NC - Not calculated
ND - Not detected

Exposure and Risk Estimates Associated With Inhalation of Volatile Compounds in Air
UniFirst Corporation
15 Olympia Avenue, Woburn, MA
Storage User - Short Term - Warehouse
Indoor Air
Volatilization from Indoor Air
Warehouse
IA-12

Receptor:	Storage User - Short Term - Warehou
Medium of Origin:	Indoor Air
Exposure Medium:	Indoor Air
Exposure Area:	Warehouse
Depth:	NA
Duration:	NA

$$C_{air} = \frac{C_{source}}{AF}$$

$$EC_{inh} = \frac{C_{air} \times ET \times EF \times ED}{AT}$$

$$HI_{inh} = \frac{EC_{inh}}{RfC}$$

$$Risk = EC_{inh} \times URF \times CF$$

Parameter	Definition	Units	Value	Comment
ET	Indoor Air Exposure Time	hrs/d	3	
EF	Indoor Air Exposure Frequency	ds/y	250	
ED	Indoor Air Exposure Duration	y	5	
ATc	Indoor Air Averaging Time - Cancer	hrs	683280	
ATn	Indoor Air Averaging Time - Non-Cancer	hrs	43800	
CF	Conversion Factor	ug/mg	1000	

Compound	EPC Indoor Air (mg/m3)	RfC (mg/m3)	URF 1/(ug/m3)	ADE-c mg/m3	Riskinh	ADE-nc mg/m3	HIinh	Risk (Indoor Air)	HI (Indoor Air)
Chloroform	1.56E-04	0.098	0.000023	8.6E-07	2.E-08	1.3E-05	1.E-04	2.E-08	1.E-04
1,1-Dichloroethane	4.05E-05	NA	0.0000016	2.2E-07	4.E-10	NA	NA	4.E-10	NA
1,2-Dichloroethane	5.42E-04	2.4	0.000026	3.0E-06	8.E-08	4.6E-05	2.E-05	8.E-08	2.E-05
1,1-Dichloroethene	3.95E-05	0.2	NA	NA	NA	3.4E-06	2.E-05	NA	2.E-05
Tetrachloroethene	4.50E-02	0.27	0.0000059	2.5E-04	1.E-06	3.9E-03	1.E-02	1.E-06	1.E-02
Trichloroethene	2.20E-04	NA	0.000002	1.2E-06	2.E-09	NA	NA	2.E-09	NA
Vinyl chloride	ND	0.1	0.0000044	ND	ND	ND	ND	ND	ND
trans-1,2-Dichloroethene	3.95E-05	0.06	NA	NA	NA	3.4E-06	6.E-05	NA	6.E-05
cis-1,2-Dichloroethene	3.95E-05	0.035	NA	NA	NA	3.4E-06	1.E-04	NA	1.E-04
1,1,1-Trichloroethane	4.69E-04	5	NA	NA	NA	4.0E-05	8.E-06	NA	8.E-06
Methylene chloride	8.70E-04	1	0.00000047	4.8E-06	2.E-09	7.4E-05	7.E-05	2.E-09	7.E-05
Carbon tetrachloride	4.34E-04	0.1	0.000006	2.4E-06	1.E-08	3.7E-05	4.E-04	1.E-08	4.E-04
Xylenes	3.14E-03	0.1	NA	NA	NA	2.7E-04	3.E-03	NA	3.E-03
Toluene	7.98E-03	5	NA	NA	NA	6.8E-04	1.E-04	NA	1.E-04
1,2-Dibromoethane	ND	0.009	0.0006	ND	ND	ND	ND	ND	ND
Benzene	1.06E-03	0.03	0.0000078	5.8E-06	5.E-08	9.1E-05	3.E-03	5.E-08	3.E-03
Bromoform	ND	NA	0.0000011	ND	ND	ND	ND	ND	ND
Ethylbenzene	8.33E-04	1	0.0000025	4.6E-06	1.E-08	7.1E-05	7.E-05	1.E-08	7.E-05
IsoPropylbenzene	ND	0.4	NA	ND	ND	ND	ND	ND	ND
trans-1,3-Dichloropropene	ND	0.02	0.000004	ND	ND	ND	ND	ND	ND
Naphthalene	3.73E-03	0.003	0.000034	2.0E-05	7.E-07	3.2E-04	1.E-01	7.E-07	1.E-01
1,3-Butadiene	6.90E-05	0.002	0.00003	3.8E-07	1.E-08	5.9E-06	3.E-03	1.E-08	3.E-03
Methyl tert-butyl ether	1.30E-04	3	0.00000026	7.1E-07	2.E-10	1.1E-05	4.E-06	2.E-10	4.E-06
1,1,2-Trichloroethane	ND	NA	0.000016	ND	ND	ND	ND	ND	ND
1,2,4-Trimethylbenzene	1.22E-03	0.007	NA	NA	NA	1.0E-04	1.E-02	NA	1.E-02
1,2-Dichloropropane	ND	0.004	0.00001	ND	ND	ND	ND	ND	ND
1,3-Dichlorobenzene	ND	0.2	NA	ND	ND	ND	ND	ND	ND
1,4-Dichlorobenzene	2.27E-03	0.8	0.000011	1.2E-05	1.E-07	1.9E-04	2.E-04	1.E-07	2.E-04
Bromodichloromethane	3.35E-05	NA	0.000037	1.8E-07	7.E-09	NA	NA	7.E-09	NA
Chlorobenzene	4.60E-05	0.05	NA	NA	NA	3.9E-06	8.E-05	NA	8.E-05
C5-C8 Aliphatic Hydrocarbons	4.80E-02	0.2	NA	NA	NA	4.1E-03	2.E-02	NA	2.E-02
C9-C12 Aliphatic Hydrocarbons	5.80E-02	0.2	NA	NA	NA	5.0E-03	2.E-02	NA	2.E-02
C9-C10 Aromatic Hydrocarbons	ND	0.05	NA	ND	ND	ND	ND	ND	ND
Total					2.E-06		2.E-01	2.E-06	2.E-01

NA - Not available
NC - Not calculated
ND - Not detected

Exposure and Risk Estimates Associated With Inhalation of Volatile Compounds in Air
UniFirst Corporation
15 Olympia Avenue, Woburn, MA
Commercial/Industrial Worker - Long Term
Indoor Air
Volatilization from Indoor Air
Warehouse
IA-12

Receptor:	Commercial/Industrial Worker - Long
Medium of Origin:	Indoor Air
Exposure Medium:	Indoor Air
Exposure Area:	Warehouse
Depth:	NA
Duration:	NA

$$C_{air} = \frac{C_{source}}{AF}$$

$$EC_{inh} = \frac{C_{air} \times ET \times EF \times ED}{AT}$$

$$HI_{inh} = \frac{EC_{inh}}{RfC}$$

$$Risk = EC_{inh} \times URF \times CF$$

Parameter	Definition	Units	Value	Comment
ET	Indoor Air Exposure Time	hrs/d	8	
EF	Indoor Air Exposure Frequency	ds/y	250	
ED	Indoor Air Exposure Duration	y	25	
ATc	Indoor Air Averaging Time - Cancer	hrs	683280	
ATn	Indoor Air Averaging Time - Non-Cancer	hrs	219000	
CF	Conversion Factor	ug/mg	1000	

Compound	EPC Indoor Air (mg/m3)	RfC (mg/m3)	URF 1/(ug/m3)	ADE-c mg/m3	Riskinh	ADE-nc mg/m3	HIinh	Risk (Indoor Air)	HI (Indoor Air)
Chloroform	1.56E-04	0.098	0.000023	1.1E-05	3.E-07	3.6E-05	4.E-04	3.E-07	4.E-04
1,1-Dichloroethane	4.05E-05	NA	0.0000016	3.0E-06	5.E-09	NA	NA	5.E-09	NA
1,2-Dichloroethane	5.42E-04	2.4	0.000026	4.0E-05	1.E-06	1.2E-04	5.E-05	1.E-06	5.E-05
1,1-Dichloroethene	3.95E-05	0.2	NA	NA	NA	9.0E-06	5.E-05	NA	5.E-05
Tetrachloroethene	4.50E-02	0.27	0.0000059	3.3E-03	2.E-05	1.0E-02	4.E-02	2.E-05	4.E-02
Trichloroethene	2.20E-04	NA	0.000002	1.6E-05	3.E-08	NA	NA	3.E-08	NA
Vinyl chloride	ND	0.1	0.0000044	ND	ND	ND	ND	ND	ND
trans-1,2-Dichloroethene	3.95E-05	0.06	NA	NA	NA	9.0E-06	2.E-04	NA	2.E-04
cis-1,2-Dichloroethene	3.95E-05	0.035	NA	NA	NA	9.0E-06	3.E-04	NA	3.E-04
1,1,1-Trichloroethane	4.69E-04	5	NA	NA	NA	1.1E-04	2.E-05	NA	2.E-05
Methylene chloride	8.70E-04	1	0.00000047	6.4E-05	3.E-08	2.0E-04	2.E-04	3.E-08	2.E-04
Carbon tetrachloride	4.34E-04	0.1	0.000006	3.2E-05	2.E-07	9.9E-05	1.E-03	2.E-07	1.E-03
Xylenes	3.14E-03	0.1	NA	NA	NA	7.2E-04	7.E-03	NA	7.E-03
Toluene	7.98E-03	5	NA	NA	NA	1.8E-03	4.E-04	NA	4.E-04
1,2-Dibromoethane	ND	0.009	0.0006	ND	ND	ND	ND	ND	ND
Benzene	1.06E-03	0.03	0.0000078	7.8E-05	6.E-07	2.4E-04	8.E-03	6.E-07	8.E-03
Bromoform	ND	NA	0.0000011	ND	ND	ND	ND	ND	ND
Ethylbenzene	8.33E-04	1	0.0000025	6.1E-05	2.E-07	1.9E-04	2.E-04	2.E-07	2.E-04
IsoPropylbenzene	ND	0.4	NA	ND	ND	ND	ND	ND	ND
trans-1,3-Dichloropropene	ND	0.02	0.000004	ND	ND	ND	ND	ND	ND
Naphthalene	3.73E-03	0.003	0.000034	2.7E-04	9.E-06	8.5E-04	3.E-01	9.E-06	3.E-01
1,3-Butadiene	6.90E-05	0.002	0.00003	5.0E-06	2.E-07	1.6E-05	8.E-03	2.E-07	8.E-03
Methyl tert-butyl ether	1.30E-04	3	0.00000026	9.5E-06	2.E-09	3.0E-05	1.E-05	2.E-09	1.E-05
1,1,2-Trichloroethane	ND	NA	0.000016	ND	ND	ND	ND	ND	ND
1,2,4-Trimethylbenzene	1.22E-03	0.007	NA	NA	NA	2.8E-04	4.E-02	NA	4.E-02
1,2-Dichloropropane	ND	0.004	0.00001	ND	ND	ND	ND	ND	ND
1,3-Dichlorobenzene	ND	0.2	NA	ND	ND	ND	ND	ND	ND
1,4-Dichlorobenzene	2.27E-03	0.8	0.000011	1.7E-04	2.E-06	5.2E-04	6.E-04	2.E-06	6.E-04
Bromodichloromethane	3.35E-05	NA	0.000037	2.5E-06	9.E-08	NA	NA	9.E-08	NA
Chlorobenzene	4.60E-05	0.05	NA	NA	NA	1.1E-05	2.E-04	NA	2.E-04
C5-C8 Aliphatic Hydrocarbons	4.80E-02	0.2	NA	NA	NA	1.1E-02	5.E-02	NA	5.E-02
C9-C12 Aliphatic Hydrocarbons	5.80E-02	0.2	NA	NA	NA	1.3E-02	7.E-02	NA	7.E-02
C9-C10 Aromatic Hydrocarbons	ND	0.05	NA	ND	ND	ND	ND	ND	ND
Total					3.E-05		5.E-01	3.E-05	5.E-01

NA - Not available
NC - Not calculated
ND - Not detected

Exposure and Risk Estimates Associated With Inhalation of Volatile Compounds in Air
UniFirst Corporation
15 Olympia Avenue, Woburn, MA
Commercial/Industrial Worker - Short Term
Indoor Air
Volatilization from Indoor Air
Warehouse
IA-12

Receptor:	Commercial/Industrial Worker - Short
Medium of Origin:	Indoor Air
Exposure Medium:	Indoor Air
Exposure Area:	Warehouse
Depth:	NA
Duration:	NA

$$C_{air} = \frac{C_{source}}{AF}$$

$$EC_{inh} = \frac{C_{air} \times ET \times EF \times ED}{AT}$$

$$HI_{inh} = \frac{EC_{inh}}{RfC}$$

$$Risk = EC_{inh} \times URF \times CF$$

Parameter	Definition	Units	Value	Comment
ET	Indoor Air Exposure Time	hrs/d	8	
EF	Indoor Air Exposure Frequency	ds/y	250	
ED	Indoor Air Exposure Duration	y	5	
ATc	Indoor Air Averaging Time - Cancer	hrs	683280	
ATn	Indoor Air Averaging Time - Non-Cancer	hrs	43800	
CF	Conversion Factor	ug/mg	1000	

Compound	EPC Indoor Air (mg/m3)	RfC (mg/m3)	URF 1/(ug/m3)	ADE-c mg/m3	Riskinh	ADE-nc mg/m3	HIinh	Risk (Indoor Air)	HI (Indoor Air)
Chloroform	1.56E-04	0.098	0.000023	2.3E-06	5.E-08	3.6E-05	4.E-04	5.E-08	4.E-04
1,1-Dichloroethane	4.05E-05	NA	0.0000016	5.9E-07	9.E-10	NA	NA	9.E-10	NA
1,2-Dichloroethane	5.42E-04	2.4	0.000026	7.9E-06	2.E-07	1.2E-04	5.E-05	2.E-07	5.E-05
1,1-Dichloroethene	3.95E-05	0.2	NA	NA	NA	9.0E-06	5.E-05	NA	5.E-05
Tetrachloroethene	4.50E-02	0.27	0.0000059	6.6E-04	4.E-06	1.0E-02	4.E-02	4.E-06	4.E-02
Trichloroethene	2.20E-04	NA	0.000002	3.2E-06	6.E-09	NA	NA	6.E-09	NA
Vinyl chloride	ND	0.1	0.0000044	ND	ND	ND	ND	ND	ND
trans-1,2-Dichloroethene	3.95E-05	0.06	NA	NA	NA	9.0E-06	2.E-04	NA	2.E-04
cis-1,2-Dichloroethene	3.95E-05	0.035	NA	NA	NA	9.0E-06	3.E-04	NA	3.E-04
1,1,1-Trichloroethane	4.69E-04	5	NA	NA	NA	1.1E-04	2.E-05	NA	2.E-05
Methylene chloride	8.70E-04	1	0.00000047	1.3E-05	6.E-09	2.0E-04	2.E-04	6.E-09	2.E-04
Carbon tetrachloride	4.34E-04	0.1	0.000006	6.4E-06	4.E-08	9.9E-05	1.E-03	4.E-08	1.E-03
Xylenes	3.14E-03	0.1	NA	NA	NA	7.2E-04	7.E-03	NA	7.E-03
Toluene	7.98E-03	5	NA	NA	NA	1.8E-03	4.E-04	NA	4.E-04
1,2-Dibromoethane	ND	0.009	0.0006	ND	ND	ND	ND	ND	ND
Benzene	1.06E-03	0.03	0.0000078	1.6E-05	1.E-07	2.4E-04	8.E-03	1.E-07	8.E-03
Bromoform	ND	NA	0.0000011	ND	ND	ND	ND	ND	ND
Ethylbenzene	8.33E-04	1	0.0000025	1.2E-05	3.E-08	1.9E-04	2.E-04	3.E-08	2.E-04
IsoPropylbenzene	ND	0.4	NA	ND	ND	ND	ND	ND	ND
trans-1,3-Dichloropropene	ND	0.02	0.000004	ND	ND	ND	ND	ND	ND
Naphthalene	3.73E-03	0.003	0.000034	5.5E-05	2.E-06	8.5E-04	3.E-01	2.E-06	3.E-01
1,3-Butadiene	6.90E-05	0.002	0.00003	1.0E-06	3.E-08	1.6E-05	8.E-03	3.E-08	8.E-03
Methyl tert-butyl ether	1.30E-04	3	0.00000026	1.9E-06	5.E-10	3.0E-05	1.E-05	5.E-10	1.E-05
1,1,2-Trichloroethane	ND	NA	0.000016	ND	ND	ND	ND	ND	ND
1,2,4-Trimethylbenzene	1.22E-03	0.007	NA	NA	NA	2.8E-04	4.E-02	NA	4.E-02
1,2-Dichloropropane	ND	0.004	0.00001	ND	ND	ND	ND	ND	ND
1,3-Dichlorobenzene	ND	0.2	NA	ND	ND	ND	ND	ND	ND
1,4-Dichlorobenzene	2.27E-03	0.8	0.000011	3.3E-05	4.E-07	5.2E-04	6.E-04	4.E-07	6.E-04
Bromodichloromethane	3.35E-05	NA	0.000037	4.9E-07	2.E-08	NA	NA	2.E-08	NA
Chlorobenzene	4.60E-05	0.05	NA	NA	NA	1.1E-05	2.E-04	NA	2.E-04
C5-C8 Aliphatic Hydrocarbons	4.80E-02	0.2	NA	NA	NA	1.1E-02	5.E-02	NA	5.E-02
C9-C12 Aliphatic Hydrocarbons	5.80E-02	0.2	NA	NA	NA	1.3E-02	7.E-02	NA	7.E-02
C9-C10 Aromatic Hydrocarbons	ND	0.05	NA	ND	ND	ND	ND	ND	ND
Total					7.E-06		5.E-01	7.E-06	5.E-01

NA - Not available
NC - Not calculated
ND - Not detected

Exposure and Risk Estimates Associated With Inhalation of Volatile Compounds in Air
UniFirst Corporation
15 Olympia Avenue, Woburn, MA
Resident - Long Term
Indoor Air
Volatilization from Indoor Air
Warehouse
IA-12

Receptor:	Resident - Long Term
Medium of Origin:	Indoor Air
Exposure Medium:	Indoor Air
Exposure Area:	Warehouse
Depth:	NA
Duration:	NA

$$C_{air} = \frac{C_{source}}{AF}$$

$$EC_{inh} = \frac{C_{air} \times ET \times EF \times ED}{AT}$$

$$HI_{inh} = \frac{EC_{inh}}{RfC}$$

$$Risk = EC_{inh} \times URF \times CF$$

Parameter	Definition	Units	Value	Comment
ET	Indoor Air Exposure Time	hrs/d	24	
EF	Indoor Air Exposure Frequency	ds/y	350	
ED	Indoor Air Exposure Duration	y	30	
ATc	Indoor Air Averaging Time - Cancer	hrs	683280	
ATn	Indoor Air Averaging Time - Non-Cancer	hrs	262800	
CF	Conversion Factor	ug/mg	1000	

Compound	EPC Indoor Air (mg/m3)	RfC (mg/m3)	URF 1/(ug/m3)	ADE-c mg/m3	Riskinh	ADE-nc mg/m3	HIinh	Risk (Indoor Air)	HI (Indoor Air)
Chloroform	1.56E-04	0.098	0.000023	5.8E-05	1.E-06	1.5E-04	2.E-03	1.E-06	2.E-03
1,1-Dichloroethane	4.05E-05	NA	0.0000016	1.5E-05	2.E-08	NA	NA	2.E-08	NA
1,2-Dichloroethane	5.42E-04	2.4	0.000026	2.0E-04	5.E-06	5.2E-04	2.E-04	5.E-06	2.E-04
1,1-Dichloroethene	3.95E-05	0.2	NA	NA	NA	3.8E-05	2.E-04	NA	2.E-04
Tetrachloroethene	4.50E-02	0.27	0.0000059	1.7E-02	1.E-04	4.3E-02	2.E-01	1.E-04	2.E-01
Trichloroethene	2.20E-04	NA	0.000002	8.1E-05	2.E-07	NA	NA	2.E-07	NA
Vinyl chloride	ND	0.1	0.0000044	ND	ND	ND	ND	ND	ND
trans-1,2-Dichloroethene	3.95E-05	0.06	NA	NA	NA	3.8E-05	6.E-04	NA	6.E-04
cis-1,2-Dichloroethene	3.95E-05	0.035	NA	NA	NA	3.8E-05	1.E-03	NA	1.E-03
1,1,1-Trichloroethane	4.69E-04	5	NA	NA	NA	4.5E-04	9.E-05	NA	9.E-05
Methylene chloride	8.70E-04	1	0.00000047	3.2E-04	2.E-07	8.3E-04	8.E-04	2.E-07	8.E-04
Carbon tetrachloride	4.34E-04	0.1	0.000006	1.6E-04	1.E-06	4.2E-04	4.E-03	1.E-06	4.E-03
Xylenes	3.14E-03	0.1	NA	NA	NA	3.0E-03	3.E-02	NA	3.E-02
Toluene	7.98E-03	5	NA	NA	NA	7.7E-03	2.E-03	NA	2.E-03
1,2-Dibromoethane	ND	0.009	0.0006	ND	ND	ND	ND	ND	ND
Benzene	1.06E-03	0.03	0.0000078	3.9E-04	3.E-06	1.0E-03	3.E-02	3.E-06	3.E-02
Bromoform	ND	NA	0.0000011	ND	ND	ND	ND	ND	ND
Ethylbenzene	8.33E-04	1	0.0000025	3.1E-04	8.E-07	8.0E-04	8.E-04	8.E-07	8.E-04
IsoPropylbenzene	ND	0.4	NA	ND	ND	ND	ND	ND	ND
trans-1,3-Dichloropropene	ND	0.02	0.000004	ND	ND	ND	ND	ND	ND
Naphthalene	3.73E-03	0.003	0.000034	1.4E-03	5.E-05	3.6E-03	1.E+00	5.E-05	1.E+00
1,3-Butadiene	6.90E-05	0.002	0.00003	2.5E-05	8.E-07	6.6E-05	3.E-02	8.E-07	3.E-02
Methyl tert-butyl ether	1.30E-04	3	0.00000026	4.8E-05	1.E-08	1.2E-04	4.E-05	1.E-08	4.E-05
1,1,2-Trichloroethane	ND	NA	0.000016	ND	ND	ND	ND	ND	ND
1,2,4-Trimethylbenzene	1.22E-03	0.007	NA	NA	NA	1.2E-03	2.E-01	NA	2.E-01
1,2-Dichloropropane	ND	0.004	0.00001	ND	ND	ND	ND	ND	ND
1,3-Dichlorobenzene	ND	0.2	NA	ND	ND	ND	ND	ND	ND
1,4-Dichlorobenzene	2.27E-03	0.8	0.000011	8.4E-04	9.E-06	2.2E-03	3.E-03	9.E-06	3.E-03
Bromodichloromethane	3.35E-05	NA	0.000037	1.2E-05	5.E-07	NA	NA	5.E-07	NA
Chlorobenzene	4.60E-05	0.05	NA	NA	NA	4.4E-05	9.E-04	NA	9.E-04
C5-C8 Aliphatic Hydrocarbons	4.80E-02	0.2	NA	NA	NA	4.6E-02	2.E-01	NA	2.E-01
C9-C12 Aliphatic Hydrocarbons	5.80E-02	0.2	NA	NA	NA	5.6E-02	3.E-01	NA	3.E-01
C9-C10 Aromatic Hydrocarbons	ND	0.05	NA	ND	ND	ND	ND	ND	ND
Total					2.E-04		2.E+00	2.E-04	2.E+00

NA - Not available
NC - Not calculated
ND - Not detected

Exposure and Risk Estimates Associated With Inhalation of Volatile Compounds in Air
UniFirst Corporation
15 Olympia Avenue, Woburn, MA
Storage User - Long Term - Warehouse
Indoor Air
Volatilization from Indoor Air
Warehouse
IA-13

Receptor:	Storage User - Long Term - Warehou
Medium of Origin:	Indoor Air
Exposure Medium:	Indoor Air
Exposure Area:	Warehouse
Depth:	NA
Duration:	NA

$$C_{air} = \frac{C_{source}}{AF}$$

$$EC_{inh} = \frac{C_{air} \times ET \times EF \times ED}{AT}$$

$$HI_{inh} = \frac{EC_{inh}}{RfC}$$

$$Risk = EC_{inh} \times URF \times CF$$

Parameter	Definition	Units	Value	Comment
ET	Indoor Air Exposure Time	hrs/d	3	
EF	Indoor Air Exposure Frequency	ds/y	250	
ED	Indoor Air Exposure Duration	y	25	
ATc	Indoor Air Averaging Time - Cancer	hrs	683280	
ATn	Indoor Air Averaging Time - Non-Cancer	hrs	219000	
CF	Conversion Factor	ug/mg	1000	

Compound	EPC Indoor Air (mg/m3)	RfC (mg/m3)	URF 1/(ug/m3)	ADE-c mg/m3	Riskinh	ADE-nc mg/m3	HIinh	Risk (Indoor Air)	HI (Indoor Air)
Chloroform	1.29E-04	0.098	0.000023	3.5E-06	8.E-08	1.1E-05	1.E-04	8.E-08	1.E-04
1,1-Dichloroethane	8.70E-05	NA	0.0000016	2.4E-06	4.E-09	NA	NA	4.E-09	NA
1,2-Dichloroethane	3.82E-04	2.4	0.000026	1.0E-05	3.E-07	3.3E-05	1.E-05	3.E-07	1.E-05
1,1-Dichloroethene	3.95E-05	0.2	NA	NA	NA	3.4E-06	2.E-05	NA	2.E-05
Tetrachloroethene	4.59E-02	0.27	0.0000059	1.3E-03	7.E-06	3.9E-03	1.E-02	7.E-06	1.E-02
Trichloroethene	4.67E-04	NA	0.000002	1.3E-05	3.E-08	NA	NA	3.E-08	NA
Vinyl chloride	ND	0.1	0.0000044	ND	ND	ND	ND	ND	ND
trans-1,2-Dichloroethene	3.95E-05	0.06	NA	NA	NA	3.4E-06	6.E-05	NA	6.E-05
cis-1,2-Dichloroethene	1.86E-04	0.035	NA	NA	NA	1.6E-05	5.E-04	NA	5.E-04
1,1,1-Trichloroethane	6.60E-04	5	NA	NA	NA	5.6E-05	1.E-05	NA	1.E-05
Methylene chloride	4.40E-03	1	0.00000047	1.2E-04	6.E-08	3.8E-04	4.E-04	6.E-08	4.E-04
Carbon tetrachloride	4.12E-04	0.1	0.000006	1.1E-05	7.E-08	3.5E-05	4.E-04	7.E-08	4.E-04
Xylenes	1.74E-03	0.1	NA	NA	NA	1.5E-04	1.E-03	NA	1.E-03
Toluene	4.57E-03	5	NA	NA	NA	3.9E-04	8.E-05	NA	8.E-05
1,2-Dibromoethane	ND	0.009	0.0006	ND	ND	ND	ND	ND	ND
Benzene	7.55E-04	0.03	0.0000078	2.1E-05	2.E-07	6.5E-05	2.E-03	2.E-07	2.E-03
Bromoform	ND	NA	0.0000011	ND	ND	ND	ND	ND	ND
Ethylbenzene	4.88E-04	1	0.0000025	1.3E-05	3.E-08	4.2E-05	4.E-05	3.E-08	4.E-05
IsoPropylbenzene	ND	0.4	NA	ND	ND	ND	ND	ND	ND
trans-1,3-Dichloropropene	ND	0.02	0.000004	ND	ND	ND	ND	ND	ND
Naphthalene	3.50E-03	0.003	0.000034	9.6E-05	3.E-06	3.0E-04	1.E-01	3.E-06	1.E-01
1,3-Butadiene	7.75E-05	0.002	0.00003	2.1E-06	6.E-08	6.6E-06	3.E-03	6.E-08	3.E-03
Methyl tert-butyl ether	8.30E-05	3	0.00000026	2.3E-06	6.E-10	7.1E-06	2.E-06	6.E-10	2.E-06
1,1,2-Trichloroethane	ND	NA	0.000016	ND	ND	ND	ND	ND	ND
1,2,4-Trimethylbenzene	4.69E-04	0.007	NA	NA	NA	4.0E-05	6.E-03	NA	6.E-03
1,2-Dichloropropane	ND	0.004	0.00001	ND	ND	ND	ND	ND	ND
1,3-Dichlorobenzene	ND	0.2	NA	ND	ND	ND	ND	ND	ND
1,4-Dichlorobenzene	9.45E-04	0.8	0.000011	2.6E-05	3.E-07	8.1E-05	1.E-04	3.E-07	1.E-04
Bromodichloromethane	3.35E-05	NA	0.000037	9.2E-07	3.E-08	NA	NA	3.E-08	NA
Chlorobenzene	4.60E-05	0.05	NA	NA	NA	3.9E-06	8.E-05	NA	8.E-05
C5-C8 Aliphatic Hydrocarbons	2.35E-02	0.2	NA	NA	NA	2.0E-03	1.E-02	NA	1.E-02
C9-C12 Aliphatic Hydrocarbons	ND	0.2	NA	ND	ND	ND	ND	ND	ND
C9-C10 Aromatic Hydrocarbons	ND	0.05	NA	ND	ND	ND	ND	ND	ND
Total					1.E-05		1.E-01	1.E-05	1.E-01

NA - Not available
NC - Not calculated
ND - Not detected

Exposure and Risk Estimates Associated With Inhalation of Volatile Compounds in Air
UniFirst Corporation
15 Olympia Avenue, Woburn, MA
Storage User - Short Term - Warehouse
Indoor Air
Volatilization from Indoor Air
Warehouse
IA-13

Receptor:	Storage User - Short Term - Warehou
Medium of Origin:	Indoor Air
Exposure Medium:	Indoor Air
Exposure Area:	Warehouse
Depth:	NA
Duration:	NA

$$C_{air} = \frac{C_{source}}{AF}$$

$$EC_{inh} = \frac{C_{air} \times ET \times EF \times ED}{AT}$$

$$HI_{inh} = \frac{EC_{inh}}{RfC}$$

$$Risk = EC_{inh} \times URF \times CF$$

Parameter	Definition	Units	Value	Comment
ET	Indoor Air Exposure Time	hrs/d	3	
EF	Indoor Air Exposure Frequency	ds/y	250	
ED	Indoor Air Exposure Duration	y	5	
ATc	Indoor Air Averaging Time - Cancer	hrs	683280	
ATn	Indoor Air Averaging Time - Non-Cancer	hrs	43800	
CF	Conversion Factor	ug/mg	1000	

Compound	EPC Indoor Air (mg/m3)	RfC (mg/m3)	URF 1/(ug/m3)	ADE-c mg/m3	Riskinh	ADE-nc mg/m3	HIinh	Risk (Indoor Air)	HI (Indoor Air)
Chloroform	1.29E-04	0.098	0.000023	7.1E-07	2.E-08	1.1E-05	1.E-04	2.E-08	1.E-04
1,1-Dichloroethane	8.70E-05	NA	0.0000016	4.8E-07	8.E-10	NA	NA	8.E-10	NA
1,2-Dichloroethane	3.82E-04	2.4	0.000026	2.1E-06	5.E-08	3.3E-05	1.E-05	5.E-08	1.E-05
1,1-Dichloroethene	3.95E-05	0.2	NA	NA	NA	3.4E-06	2.E-05	NA	2.E-05
Tetrachloroethene	4.59E-02	0.27	0.0000059	2.5E-04	1.E-06	3.9E-03	1.E-02	1.E-06	1.E-02
Trichloroethene	4.67E-04	NA	0.000002	2.6E-06	5.E-09	NA	NA	5.E-09	NA
Vinyl chloride	ND	0.1	0.0000044	ND	ND	ND	ND	ND	ND
trans-1,2-Dichloroethene	3.95E-05	0.06	NA	NA	NA	3.4E-06	6.E-05	NA	6.E-05
cis-1,2-Dichloroethene	1.86E-04	0.035	NA	NA	NA	1.6E-05	5.E-04	NA	5.E-04
1,1,1-Trichloroethane	6.60E-04	5	NA	NA	NA	5.6E-05	1.E-05	NA	1.E-05
Methylene chloride	4.40E-03	1	0.00000047	2.4E-05	1.E-08	3.8E-04	4.E-04	1.E-08	4.E-04
Carbon tetrachloride	4.12E-04	0.1	0.000006	2.3E-06	1.E-08	3.5E-05	4.E-04	1.E-08	4.E-04
Xylenes	1.74E-03	0.1	NA	NA	NA	1.5E-04	1.E-03	NA	1.E-03
Toluene	4.57E-03	5	NA	NA	NA	3.9E-04	8.E-05	NA	8.E-05
1,2-Dibromoethane	ND	0.009	0.0006	ND	ND	ND	ND	ND	ND
Benzene	7.55E-04	0.03	0.0000078	4.1E-06	3.E-08	6.5E-05	2.E-03	3.E-08	2.E-03
Bromoform	ND	NA	0.0000011	ND	ND	ND	ND	ND	ND
Ethylbenzene	4.88E-04	1	0.0000025	2.7E-06	7.E-09	4.2E-05	4.E-05	7.E-09	4.E-05
IsoPropylbenzene	ND	0.4	NA	ND	ND	ND	ND	ND	ND
trans-1,3-Dichloropropene	ND	0.02	0.000004	ND	ND	ND	ND	ND	ND
Naphthalene	3.50E-03	0.003	0.000034	1.9E-05	7.E-07	3.0E-04	1.E-01	7.E-07	1.E-01
1,3-Butadiene	7.75E-05	0.002	0.00003	4.3E-07	1.E-08	6.6E-06	3.E-03	1.E-08	3.E-03
Methyl tert-butyl ether	8.30E-05	3	0.00000026	4.6E-07	1.E-10	7.1E-06	2.E-06	1.E-10	2.E-06
1,1,2-Trichloroethane	ND	NA	0.000016	ND	ND	ND	ND	ND	ND
1,2,4-Trimethylbenzene	4.69E-04	0.007	NA	NA	NA	4.0E-05	6.E-03	NA	6.E-03
1,2-Dichloropropane	ND	0.004	0.00001	ND	ND	ND	ND	ND	ND
1,3-Dichlorobenzene	ND	0.2	NA	ND	ND	ND	ND	ND	ND
1,4-Dichlorobenzene	9.45E-04	0.8	0.000011	5.2E-06	6.E-08	8.1E-05	1.E-04	6.E-08	1.E-04
Bromodichloromethane	3.35E-05	NA	0.000037	1.8E-07	7.E-09	NA	NA	7.E-09	NA
Chlorobenzene	4.60E-05	0.05	NA	NA	NA	3.9E-06	8.E-05	NA	8.E-05
C5-C8 Aliphatic Hydrocarbons	2.35E-02	0.2	NA	NA	NA	2.0E-03	1.E-02	NA	1.E-02
C9-C12 Aliphatic Hydrocarbons	ND	0.2	NA	ND	ND	ND	ND	ND	ND
C9-C10 Aromatic Hydrocarbons	ND	0.05	NA	ND	ND	ND	ND	ND	ND
Total					2.E-06		1.E-01	2.E-06	1.E-01

NA - Not available
NC - Not calculated
ND - Not detected

Exposure and Risk Estimates Associated With Inhalation of Volatile Compounds in Air
UniFirst Corporation
15 Olympia Avenue, Woburn, MA
Commercial/Industrial Worker - Long Term
Indoor Air
Volatilization from Indoor Air
Warehouse
IA-13

Receptor:	Commercial/Industrial Worker - Long
Medium of Origin:	Indoor Air
Exposure Medium:	Indoor Air
Exposure Area:	Warehouse
Depth:	NA
Duration:	NA

$$C_{air} = \frac{C_{source}}{AF}$$

$$EC_{inh} = \frac{C_{air} \times ET \times EF \times ED}{AT}$$

$$HI_{inh} = \frac{EC_{inh}}{RfC}$$

$$Risk = EC_{inh} \times URF \times CF$$

Parameter	Definition	Units	Value	Comment
ET	Indoor Air Exposure Time	hrs/d	8	
EF	Indoor Air Exposure Frequency	ds/y	250	
ED	Indoor Air Exposure Duration	y	25	
ATc	Indoor Air Averaging Time - Cancer	hrs	683280	
ATn	Indoor Air Averaging Time - Non-Cancer	hrs	219000	
CF	Conversion Factor	ug/mg	1000	

Compound	EPC Indoor Air (mg/m3)	RfC (mg/m3)	URF 1/(ug/m3)	ADE-c mg/m3	Riskinh	ADE-nc mg/m3	HIinh	Risk (Indoor Air)	HI (Indoor Air)
Chloroform	1.29E-04	0.098	0.000023	9.4E-06	2.E-07	2.9E-05	3.E-04	2.E-07	3.E-04
1,1-Dichloroethane	8.70E-05	NA	0.0000016	6.4E-06	1.E-08	NA	NA	1.E-08	NA
1,2-Dichloroethane	3.82E-04	2.4	0.000026	2.8E-05	7.E-07	8.7E-05	4.E-05	7.E-07	4.E-05
1,1-Dichloroethene	3.95E-05	0.2	NA	NA	NA	9.0E-06	5.E-05	NA	5.E-05
Tetrachloroethene	4.59E-02	0.27	0.0000059	3.4E-03	2.E-05	1.0E-02	4.E-02	2.E-05	4.E-02
Trichloroethene	4.67E-04	NA	0.000002	3.4E-05	7.E-08	NA	NA	7.E-08	NA
Vinyl chloride	ND	0.1	0.0000044	ND	ND	ND	ND	ND	ND
trans-1,2-Dichloroethene	3.95E-05	0.06	NA	NA	NA	9.0E-06	2.E-04	NA	2.E-04
cis-1,2-Dichloroethene	1.86E-04	0.035	NA	NA	NA	4.2E-05	1.E-03	NA	1.E-03
1,1,1-Trichloroethane	6.60E-04	5	NA	NA	NA	1.5E-04	3.E-05	NA	3.E-05
Methylene chloride	4.40E-03	1	0.00000047	3.2E-04	2.E-07	1.0E-03	1.E-03	2.E-07	1.E-03
Carbon tetrachloride	4.12E-04	0.1	0.000006	3.0E-05	2.E-07	9.4E-05	9.E-04	2.E-07	9.E-04
Xylenes	1.74E-03	0.1	NA	NA	NA	4.0E-04	4.E-03	NA	4.E-03
Toluene	4.57E-03	5	NA	NA	NA	1.0E-03	2.E-04	NA	2.E-04
1,2-Dibromoethane	ND	0.009	0.0006	ND	ND	ND	ND	ND	ND
Benzene	7.55E-04	0.03	0.0000078	5.5E-05	4.E-07	1.7E-04	6.E-03	4.E-07	6.E-03
Bromoform	ND	NA	0.0000011	ND	ND	ND	ND	ND	ND
Ethylbenzene	4.88E-04	1	0.0000025	3.6E-05	9.E-08	1.1E-04	1.E-04	9.E-08	1.E-04
IsoPropylbenzene	ND	0.4	NA	ND	ND	ND	ND	ND	ND
trans-1,3-Dichloropropene	ND	0.02	0.000004	ND	ND	ND	ND	ND	ND
Naphthalene	3.50E-03	0.003	0.000034	2.6E-04	9.E-06	8.0E-04	3.E-01	9.E-06	3.E-01
1,3-Butadiene	7.75E-05	0.002	0.00003	5.7E-06	2.E-07	1.8E-05	9.E-03	2.E-07	9.E-03
Methyl tert-butyl ether	8.30E-05	3	0.00000026	6.1E-06	2.E-09	1.9E-05	6.E-06	2.E-09	6.E-06
1,1,2-Trichloroethane	ND	NA	0.000016	ND	ND	ND	ND	ND	ND
1,2,4-Trimethylbenzene	4.69E-04	0.007	NA	NA	NA	1.1E-04	2.E-02	NA	2.E-02
1,2-Dichloropropane	ND	0.004	0.00001	ND	ND	ND	ND	ND	ND
1,3-Dichlorobenzene	ND	0.2	NA	ND	ND	ND	ND	ND	ND
1,4-Dichlorobenzene	9.45E-04	0.8	0.000011	6.9E-05	8.E-07	2.2E-04	3.E-04	8.E-07	3.E-04
Bromodichloromethane	3.35E-05	NA	0.000037	2.5E-06	9.E-08	NA	NA	9.E-08	NA
Chlorobenzene	4.60E-05	0.05	NA	NA	NA	1.1E-05	2.E-04	NA	2.E-04
C5-C8 Aliphatic Hydrocarbons	2.35E-02	0.2	NA	NA	NA	5.4E-03	3.E-02	NA	3.E-02
C9-C12 Aliphatic Hydrocarbons	ND	0.2	NA	ND	ND	ND	ND	ND	ND
C9-C10 Aromatic Hydrocarbons	ND	0.05	NA	ND	ND	ND	ND	ND	ND
Total					3.E-05		4.E-01	3.E-05	4.E-01

NA - Not available
NC - Not calculated
ND - Not detected

Exposure and Risk Estimates Associated With Inhalation of Volatile Compounds in Air
UniFirst Corporation
15 Olympia Avenue, Woburn, MA
Commercial/Industrial Worker - Short Term
Indoor Air
Volatilization from Indoor Air
Warehouse
IA-13

Receptor:	Commercial/Industrial Worker - Short
Medium of Origin:	Indoor Air
Exposure Medium:	Indoor Air
Exposure Area:	Warehouse
Depth:	NA
Duration:	NA

$$C_{air} = \frac{C_{source}}{AF}$$

$$EC_{inh} = \frac{C_{air} \times ET \times EF \times ED}{AT}$$

$$HI_{inh} = \frac{EC_{inh}}{RfC}$$

$$Risk = EC_{inh} \times URF \times CF$$

Parameter	Definition	Units	Value	Comment
ET	Indoor Air Exposure Time	hrs/d	8	
EF	Indoor Air Exposure Frequency	ds/y	250	
ED	Indoor Air Exposure Duration	y	5	
ATc	Indoor Air Averaging Time - Cancer	hrs	683280	
ATn	Indoor Air Averaging Time - Non-Cancer	hrs	43800	
CF	Conversion Factor	ug/mg	1000	

Compound	EPC Indoor Air (mg/m3)	RfC (mg/m3)	URF 1/(ug/m3)	ADE-c mg/m3	Riskinh	ADE-nc mg/m3	HIinh	Risk (Indoor Air)	HI (Indoor Air)
Chloroform	1.29E-04	0.098	0.000023	1.9E-06	4.E-08	2.9E-05	3.E-04	4.E-08	3.E-04
1,1-Dichloroethane	8.70E-05	NA	0.0000016	1.3E-06	2.E-09	NA	NA	2.E-09	NA
1,2-Dichloroethane	3.82E-04	2.4	0.000026	5.6E-06	1.E-07	8.7E-05	4.E-05	1.E-07	4.E-05
1,1-Dichloroethene	3.95E-05	0.2	NA	NA	NA	9.0E-06	5.E-05	NA	5.E-05
Tetrachloroethene	4.59E-02	0.27	0.0000059	6.7E-04	4.E-06	1.0E-02	4.E-02	4.E-06	4.E-02
Trichloroethene	4.67E-04	NA	0.000002	6.8E-06	1.E-08	NA	NA	1.E-08	NA
Vinyl chloride	ND	0.1	0.0000044	ND	ND	ND	ND	ND	ND
trans-1,2-Dichloroethene	3.95E-05	0.06	NA	NA	NA	9.0E-06	2.E-04	NA	2.E-04
cis-1,2-Dichloroethene	1.86E-04	0.035	NA	NA	NA	4.2E-05	1.E-03	NA	1.E-03
1,1,1-Trichloroethane	6.60E-04	5	NA	NA	NA	1.5E-04	3.E-05	NA	3.E-05
Methylene chloride	4.40E-03	1	0.00000047	6.4E-05	3.E-08	1.0E-03	1.E-03	3.E-08	1.E-03
Carbon tetrachloride	4.12E-04	0.1	0.000006	6.0E-06	4.E-08	9.4E-05	9.E-04	4.E-08	9.E-04
Xylenes	1.74E-03	0.1	NA	NA	NA	4.0E-04	4.E-03	NA	4.E-03
Toluene	4.57E-03	5	NA	NA	NA	1.0E-03	2.E-04	NA	2.E-04
1,2-Dibromoethane	ND	0.009	0.0006	ND	ND	ND	ND	ND	ND
Benzene	7.55E-04	0.03	0.0000078	1.1E-05	9.E-08	1.7E-04	6.E-03	9.E-08	6.E-03
Bromoform	ND	NA	0.0000011	ND	ND	ND	ND	ND	ND
Ethylbenzene	4.88E-04	1	0.0000025	7.1E-06	2.E-08	1.1E-04	1.E-04	2.E-08	1.E-04
IsoPropylbenzene	ND	0.4	NA	ND	ND	ND	ND	ND	ND
trans-1,3-Dichloropropene	ND	0.02	0.000004	ND	ND	ND	ND	ND	ND
Naphthalene	3.50E-03	0.003	0.000034	5.1E-05	2.E-06	8.0E-04	3.E-01	2.E-06	3.E-01
1,3-Butadiene	7.75E-05	0.002	0.00003	1.1E-06	3.E-08	1.8E-05	9.E-03	3.E-08	9.E-03
Methyl tert-butyl ether	8.30E-05	3	0.00000026	1.2E-06	3.E-10	1.9E-05	6.E-06	3.E-10	6.E-06
1,1,2-Trichloroethane	ND	NA	0.000016	ND	ND	ND	ND	ND	ND
1,2,4-Trimethylbenzene	4.69E-04	0.007	NA	NA	NA	1.1E-04	2.E-02	NA	2.E-02
1,2-Dichloropropane	ND	0.004	0.00001	ND	ND	ND	ND	ND	ND
1,3-Dichlorobenzene	ND	0.2	NA	ND	ND	ND	ND	ND	ND
1,4-Dichlorobenzene	9.45E-04	0.8	0.000011	1.4E-05	2.E-07	2.2E-04	3.E-04	2.E-07	3.E-04
Bromodichloromethane	3.35E-05	NA	0.000037	4.9E-07	2.E-08	NA	NA	2.E-08	NA
Chlorobenzene	4.60E-05	0.05	NA	NA	NA	1.1E-05	2.E-04	NA	2.E-04
C5-C8 Aliphatic Hydrocarbons	2.35E-02	0.2	NA	NA	NA	5.4E-03	3.E-02	NA	3.E-02
C9-C12 Aliphatic Hydrocarbons	ND	0.2	NA	ND	ND	ND	ND	ND	ND
C9-C10 Aromatic Hydrocarbons	ND	0.05	NA	ND	ND	ND	ND	ND	ND
Total					6.E-06		4.E-01	6.E-06	4.E-01

NA - Not available
NC - Not calculated
ND - Not detected

Exposure and Risk Estimates Associated With Inhalation of Volatile Compounds in Air
UniFirst Corporation
15 Olympia Avenue, Woburn, MA
Resident - Long Term
Indoor Air
Volatilization from Indoor Air
Warehouse
IA-13

Receptor:	Resident - Long Term
Medium of Origin:	Indoor Air
Exposure Medium:	Indoor Air
Exposure Area:	Warehouse
Depth:	NA
Duration:	NA

$$C_{air} = \frac{C_{source}}{AF}$$

$$EC_{inh} = \frac{C_{air} \times ET \times EF \times ED}{AT}$$

$$HI_{inh} = \frac{EC_{inh}}{RfC}$$

$$Risk = EC_{inh} \times URF \times CF$$

Parameter	Definition	Units	Value	Comment
ET	Indoor Air Exposure Time	hrs/d	24	
EF	Indoor Air Exposure Frequency	ds/y	350	
ED	Indoor Air Exposure Duration	y	30	
ATc	Indoor Air Averaging Time - Cancer	hrs	683280	
ATn	Indoor Air Averaging Time - Non-Cancer	hrs	262800	
CF	Conversion Factor	ug/mg	1000	

Compound	EPC Indoor Air (mg/m3)	RfC (mg/m3)	URF 1/(ug/m3)	ADE-c mg/m3	Riskinh	ADE-nc mg/m3	HIinh	Risk (Indoor Air)	HI (Indoor Air)
Chloroform	1.29E-04	0.098	0.000023	4.8E-05	1.E-06	1.2E-04	1.E-03	1.E-06	1.E-03
1,1-Dichloroethane	8.70E-05	NA	0.0000016	3.2E-05	5.E-08	NA	NA	5.E-08	NA
1,2-Dichloroethane	3.82E-04	2.4	0.000026	1.4E-04	4.E-06	3.7E-04	2.E-04	4.E-06	2.E-04
1,1-Dichloroethene	3.95E-05	0.2	NA	NA	NA	3.8E-05	2.E-04	NA	2.E-04
Tetrachloroethene	4.59E-02	0.27	0.0000059	1.7E-02	1.E-04	4.4E-02	2.E-01	1.E-04	2.E-01
Trichloroethene	4.67E-04	NA	0.000002	1.7E-04	3.E-07	NA	NA	3.E-07	NA
Vinyl chloride	ND	0.1	0.0000044	ND	ND	ND	ND	ND	ND
trans-1,2-Dichloroethene	3.95E-05	0.06	NA	NA	NA	3.8E-05	6.E-04	NA	6.E-04
cis-1,2-Dichloroethene	1.86E-04	0.035	NA	NA	NA	1.8E-04	5.E-03	NA	5.E-03
1,1,1-Trichloroethane	6.60E-04	5	NA	NA	NA	6.3E-04	1.E-04	NA	1.E-04
Methylene chloride	4.40E-03	1	0.00000047	1.6E-03	8.E-07	4.2E-03	4.E-03	8.E-07	4.E-03
Carbon tetrachloride	4.12E-04	0.1	0.000006	1.5E-04	9.E-07	3.9E-04	4.E-03	9.E-07	4.E-03
Xylenes	1.74E-03	0.1	NA	NA	NA	1.7E-03	2.E-02	NA	2.E-02
Toluene	4.57E-03	5	NA	NA	NA	4.4E-03	9.E-04	NA	9.E-04
1,2-Dibromoethane	ND	0.009	0.0006	ND	ND	ND	ND	ND	ND
Benzene	7.55E-04	0.03	0.0000078	2.8E-04	2.E-06	7.2E-04	2.E-02	2.E-06	2.E-02
Bromoform	ND	NA	0.0000011	ND	ND	ND	ND	ND	ND
Ethylbenzene	4.88E-04	1	0.0000025	1.8E-04	4.E-07	4.7E-04	5.E-04	4.E-07	5.E-04
IsoPropylbenzene	ND	0.4	NA	ND	ND	ND	ND	ND	ND
trans-1,3-Dichloropropene	ND	0.02	0.000004	ND	ND	ND	ND	ND	ND
Naphthalene	3.50E-03	0.003	0.000034	1.3E-03	4.E-05	3.4E-03	1.E+00	4.E-05	1.E+00
1,3-Butadiene	7.75E-05	0.002	0.00003	2.9E-05	9.E-07	7.4E-05	4.E-02	9.E-07	4.E-02
Methyl tert-butyl ether	8.30E-05	3	0.00000026	3.1E-05	8.E-09	8.0E-05	3.E-05	8.E-09	3.E-05
1,1,2-Trichloroethane	ND	NA	0.000016	ND	ND	ND	ND	ND	ND
1,2,4-Trimethylbenzene	4.69E-04	0.007	NA	NA	NA	4.5E-04	6.E-02	NA	6.E-02
1,2-Dichloropropane	ND	0.004	0.00001	ND	ND	ND	ND	ND	ND
1,3-Dichlorobenzene	ND	0.2	NA	ND	ND	ND	ND	ND	ND
1,4-Dichlorobenzene	9.45E-04	0.8	0.000011	3.5E-04	4.E-06	9.1E-04	1.E-03	4.E-06	1.E-03
Bromodichloromethane	3.35E-05	NA	0.000037	1.2E-05	5.E-07	NA	NA	5.E-07	NA
Chlorobenzene	4.60E-05	0.05	NA	NA	NA	4.4E-05	9.E-04	NA	9.E-04
C5-C8 Aliphatic Hydrocarbons	2.35E-02	0.2	NA	NA	NA	2.3E-02	1.E-01	NA	1.E-01
C9-C12 Aliphatic Hydrocarbons	ND	0.2	NA	ND	ND	ND	ND	ND	ND
C9-C10 Aromatic Hydrocarbons	ND	0.05	NA	ND	ND	ND	ND	ND	ND
Total					2.E-04		2.E+00	2.E-04	2.E+00

NA - Not available
NC - Not calculated
ND - Not detected

Exposure and Risk Estimates Associated With Inhalation of Volatile Compounds in Air
UniFirst Corporation
15 Olympia Avenue, Woburn, MA
Storage User - Long Term - Warehouse
Indoor Air
Volatilization from Indoor Air
Warehouse
IA-13A

Receptor:	Storage User - Long Term - Warehou
Medium of Origin:	Indoor Air
Exposure Medium:	Indoor Air
Exposure Area:	Warehouse
Depth:	NA
Duration:	NA

$$C_{air} = \frac{C_{source}}{AF}$$

$$EC_{inh} = \frac{C_{air} \times ET \times EF \times ED}{AT}$$

$$HI_{inh} = \frac{EC_{inh}}{RfC}$$

$$Risk = EC_{inh} \times URF \times CF$$

Parameter	Definition	Units	Value	Comment
ET	Indoor Air Exposure Time	hrs/d	3	
EF	Indoor Air Exposure Frequency	ds/y	250	
ED	Indoor Air Exposure Duration	y	25	
ATc	Indoor Air Averaging Time - Cancer	hrs	683280	
ATn	Indoor Air Averaging Time - Non-Cancer	hrs	219000	
CF	Conversion Factor	ug/mg	1000	

Compound	EPC Indoor Air (mg/m3)	RfC (mg/m3)	URF 1/(ug/m3)	ADE-c mg/m3	Riskinh	ADE-nc mg/m3	HIinh	Risk (Indoor Air)	HI (Indoor Air)
Chloroform	1.32E-04	0.098	0.000023	3.6E-06	8.E-08	1.1E-05	1.E-04	8.E-08	1.E-04
1,1-Dichloroethane	8.90E-05	NA	0.0000016	2.4E-06	4.E-09	NA	NA	4.E-09	NA
1,2-Dichloroethane	4.04E-04	2.4	0.000026	1.1E-05	3.E-07	3.5E-05	1.E-05	3.E-07	1.E-05
1,1-Dichloroethene	3.95E-05	0.2	NA	NA	NA	3.4E-06	2.E-05	NA	2.E-05
Tetrachloroethene	6.02E-02	0.27	0.0000059	1.7E-03	1.E-05	5.2E-03	2.E-02	1.E-05	2.E-02
Trichloroethene	5.10E-04	NA	0.000002	1.4E-05	3.E-08	NA	NA	3.E-08	NA
Vinyl chloride	ND	0.1	0.0000044	ND	ND	ND	ND	ND	ND
trans-1,2-Dichloroethene	3.95E-05	0.06	NA	NA	NA	3.4E-06	6.E-05	NA	6.E-05
cis-1,2-Dichloroethene	1.98E-04	0.035	NA	NA	NA	1.7E-05	5.E-04	NA	5.E-04
1,1,1-Trichloroethane	7.14E-04	5	NA	NA	NA	6.1E-05	1.E-05	NA	1.E-05
Methylene chloride	8.70E-04	1	0.00000047	2.4E-05	1.E-08	7.4E-05	7.E-05	1.E-08	7.E-05
Carbon tetrachloride	4.08E-04	0.1	0.000006	1.1E-05	7.E-08	3.5E-05	3.E-04	7.E-08	3.E-04
Xylenes	2.18E-03	0.1	NA	NA	NA	1.9E-04	2.E-03	NA	2.E-03
Toluene	4.80E-03	5	NA	NA	NA	4.1E-04	8.E-05	NA	8.E-05
1,2-Dibromoethane	ND	0.009	0.0006	ND	ND	ND	ND	ND	ND
Benzene	7.85E-04	0.03	0.0000078	2.2E-05	2.E-07	6.7E-05	2.E-03	2.E-07	2.E-03
Bromoform	ND	NA	0.0000011	ND	ND	ND	ND	ND	ND
Ethylbenzene	5.90E-04	1	0.0000025	1.6E-05	4.E-08	5.1E-05	5.E-05	4.E-08	5.E-05
IsoPropylbenzene	ND	0.4	NA	ND	ND	ND	ND	ND	ND
trans-1,3-Dichloropropene	ND	0.02	0.000004	ND	ND	ND	ND	ND	ND
Naphthalene	1.56E-02	0.003	0.000034	4.3E-04	1.E-05	1.3E-03	4.E-01	1.E-05	4.E-01
1,3-Butadiene	7.10E-05	0.002	0.00003	1.9E-06	6.E-08	6.1E-06	3.E-03	6.E-08	3.E-03
Methyl tert-butyl ether	7.20E-05	3	0.00000026	2.0E-06	5.E-10	6.2E-06	2.E-06	5.E-10	2.E-06
1,1,2-Trichloroethane	ND	NA	0.000016	ND	ND	ND	ND	ND	ND
1,2,4-Trimethylbenzene	7.91E-04	0.007	NA	NA	NA	6.8E-05	1.E-02	NA	1.E-02
1,2-Dichloropropane	ND	0.004	0.00001	ND	ND	ND	ND	ND	ND
1,3-Dichlorobenzene	ND	0.2	NA	ND	ND	ND	ND	ND	ND
1,4-Dichlorobenzene	1.83E-03	0.8	0.000011	5.0E-05	6.E-07	1.6E-04	2.E-04	6.E-07	2.E-04
Bromodichloromethane	3.35E-05	NA	0.000037	9.2E-07	3.E-08	NA	NA	3.E-08	NA
Chlorobenzene	4.60E-05	0.05	NA	NA	NA	3.9E-06	8.E-05	NA	8.E-05
C5-C8 Aliphatic Hydrocarbons	3.20E-02	0.2	NA	NA	NA	2.7E-03	1.E-02	NA	1.E-02
C9-C12 Aliphatic Hydrocarbons	ND	0.2	NA	ND	ND	ND	ND	ND	ND
C9-C10 Aromatic Hydrocarbons	ND	0.05	NA	ND	ND	ND	ND	ND	ND
Total					3.E-05		5.E-01	3.E-05	5.E-01

NA - Not available
NC - Not calculated
ND - Not detected

Exposure and Risk Estimates Associated With Inhalation of Volatile Compounds in Air
UniFirst Corporation
15 Olympia Avenue, Woburn, MA
Storage User - Short Term - Warehouse
Indoor Air
Volatilization from Indoor Air
Warehouse
IA-13A

Receptor:	Storage User - Short Term - Warehou
Medium of Origin:	Indoor Air
Exposure Medium:	Indoor Air
Exposure Area:	Warehouse
Depth:	NA
Duration:	NA

$$C_{air} = \frac{C_{source}}{AF}$$

$$EC_{inh} = \frac{C_{air} \times ET \times EF \times ED}{AT}$$

$$HI_{inh} = \frac{EC_{inh}}{RfC}$$

$$Risk = EC_{inh} \times URF \times CF$$

Parameter	Definition	Units	Value	Comment
ET	Indoor Air Exposure Time	hrs/d	3	
EF	Indoor Air Exposure Frequency	ds/y	250	
ED	Indoor Air Exposure Duration	y	5	
ATc	Indoor Air Averaging Time - Cancer	hrs	683280	
ATn	Indoor Air Averaging Time - Non-Cancer	hrs	43800	
CF	Conversion Factor	ug/mg	1000	

Compound	EPC Indoor Air (mg/m3)	RfC (mg/m3)	URF 1/(ug/m3)	ADE-c mg/m3	Riskinh	ADE-nc mg/m3	HIinh	Risk (Indoor Air)	HI (Indoor Air)
Chloroform	1.32E-04	0.098	0.000023	7.2E-07	2.E-08	1.1E-05	1.E-04	2.E-08	1.E-04
1,1-Dichloroethane	8.90E-05	NA	0.0000016	4.9E-07	8.E-10	NA	NA	8.E-10	NA
1,2-Dichloroethane	4.04E-04	2.4	0.000026	2.2E-06	6.E-08	3.5E-05	1.E-05	6.E-08	1.E-05
1,1-Dichloroethene	3.95E-05	0.2	NA	NA	NA	3.4E-06	2.E-05	NA	2.E-05
Tetrachloroethene	6.02E-02	0.27	0.0000059	3.3E-04	2.E-06	5.2E-03	2.E-02	2.E-06	2.E-02
Trichloroethene	5.10E-04	NA	0.000002	2.8E-06	6.E-09	NA	NA	6.E-09	NA
Vinyl chloride	ND	0.1	0.0000044	ND	ND	ND	ND	ND	ND
trans-1,2-Dichloroethene	3.95E-05	0.06	NA	NA	NA	3.4E-06	6.E-05	NA	6.E-05
cis-1,2-Dichloroethene	1.98E-04	0.035	NA	NA	NA	1.7E-05	5.E-04	NA	5.E-04
1,1,1-Trichloroethane	7.14E-04	5	NA	NA	NA	6.1E-05	1.E-05	NA	1.E-05
Methylene chloride	8.70E-04	1	0.00000047	4.8E-06	2.E-09	7.4E-05	7.E-05	2.E-09	7.E-05
Carbon tetrachloride	4.08E-04	0.1	0.000006	2.2E-06	1.E-08	3.5E-05	3.E-04	1.E-08	3.E-04
Xylenes	2.18E-03	0.1	NA	NA	NA	1.9E-04	2.E-03	NA	2.E-03
Toluene	4.80E-03	5	NA	NA	NA	4.1E-04	8.E-05	NA	8.E-05
1,2-Dibromoethane	ND	0.009	0.0006	ND	ND	ND	ND	ND	ND
Benzene	7.85E-04	0.03	0.0000078	4.3E-06	3.E-08	6.7E-05	2.E-03	3.E-08	2.E-03
Bromoform	ND	NA	0.0000011	ND	ND	ND	ND	ND	ND
Ethylbenzene	5.90E-04	1	0.0000025	3.2E-06	8.E-09	5.1E-05	5.E-05	8.E-09	5.E-05
IsoPropylbenzene	ND	0.4	NA	ND	ND	ND	ND	ND	ND
trans-1,3-Dichloropropene	ND	0.02	0.000004	ND	ND	ND	ND	ND	ND
Naphthalene	1.56E-02	0.003	0.000034	8.6E-05	3.E-06	1.3E-03	4.E-01	3.E-06	4.E-01
1,3-Butadiene	7.10E-05	0.002	0.00003	3.9E-07	1.E-08	6.1E-06	3.E-03	1.E-08	3.E-03
Methyl tert-butyl ether	7.20E-05	3	0.00000026	4.0E-07	1.E-10	6.2E-06	2.E-06	1.E-10	2.E-06
1,1,2-Trichloroethane	ND	NA	0.000016	ND	ND	ND	ND	ND	ND
1,2,4-Trimethylbenzene	7.91E-04	0.007	NA	NA	NA	6.8E-05	1.E-02	NA	1.E-02
1,2-Dichloropropane	ND	0.004	0.00001	ND	ND	ND	ND	ND	ND
1,3-Dichlorobenzene	ND	0.2	NA	ND	ND	ND	ND	ND	ND
1,4-Dichlorobenzene	1.83E-03	0.8	0.000011	1.0E-05	1.E-07	1.6E-04	2.E-04	1.E-07	2.E-04
Bromodichloromethane	3.35E-05	NA	0.000037	1.8E-07	7.E-09	NA	NA	7.E-09	NA
Chlorobenzene	4.60E-05	0.05	NA	NA	NA	3.9E-06	8.E-05	NA	8.E-05
C5-C8 Aliphatic Hydrocarbons	3.20E-02	0.2	NA	NA	NA	2.7E-03	1.E-02	NA	1.E-02
C9-C12 Aliphatic Hydrocarbons	ND	0.2	NA	ND	ND	ND	ND	ND	ND
C9-C10 Aromatic Hydrocarbons	ND	0.05	NA	ND	ND	ND	ND	ND	ND
Total					5.E-06		5.E-01	5.E-06	5.E-01

NA - Not available
NC - Not calculated
ND - Not detected

Exposure and Risk Estimates Associated With Inhalation of Volatile Compounds in Air
UniFirst Corporation
15 Olympia Avenue, Woburn, MA
Commercial/Industrial Worker - Long Term
Indoor Air
Volatilization from Indoor Air
Warehouse
IA-13A

Receptor:	Commercial/Industrial Worker - Long
Medium of Origin:	Indoor Air
Exposure Medium:	Indoor Air
Exposure Area:	Warehouse
Depth:	NA
Duration:	NA

$$C_{air} = \frac{C_{source}}{AF}$$

$$EC_{inh} = \frac{C_{air} \times ET \times EF \times ED}{AT}$$

$$HI_{inh} = \frac{EC_{inh}}{RfC}$$

$$Risk = EC_{inh} \times URF \times CF$$

Parameter	Definition	Units	Value	Comment
ET	Indoor Air Exposure Time	hrs/d	8	
EF	Indoor Air Exposure Frequency	ds/y	250	
ED	Indoor Air Exposure Duration	y	25	
ATc	Indoor Air Averaging Time - Cancer	hrs	683280	
ATn	Indoor Air Averaging Time - Non-Cancer	hrs	219000	
CF	Conversion Factor	ug/mg	1000	

Compound	EPC Indoor Air (mg/m3)	RfC (mg/m3)	URF 1/(ug/m3)	ADE-c mg/m3	Riskinh	ADE-nc mg/m3	HIinh	Risk (Indoor Air)	HI (Indoor Air)
Chloroform	1.32E-04	0.098	0.000023	9.7E-06	2.E-07	3.0E-05	3.E-04	2.E-07	3.E-04
1,1-Dichloroethane	8.90E-05	NA	0.0000016	6.5E-06	1.E-08	NA	NA	1.E-08	NA
1,2-Dichloroethane	4.04E-04	2.4	0.000026	3.0E-05	8.E-07	9.2E-05	4.E-05	8.E-07	4.E-05
1,1-Dichloroethene	3.95E-05	0.2	NA	NA	NA	9.0E-06	5.E-05	NA	5.E-05
Tetrachloroethene	6.02E-02	0.27	0.0000059	4.4E-03	3.E-05	1.4E-02	5.E-02	3.E-05	5.E-02
Trichloroethene	5.10E-04	NA	0.000002	3.7E-05	7.E-08	NA	NA	7.E-08	NA
Vinyl chloride	ND	0.1	0.0000044	ND	ND	ND	ND	ND	ND
trans-1,2-Dichloroethene	3.95E-05	0.06	NA	NA	NA	9.0E-06	2.E-04	NA	2.E-04
cis-1,2-Dichloroethene	1.98E-04	0.035	NA	NA	NA	4.5E-05	1.E-03	NA	1.E-03
1,1,1-Trichloroethane	7.14E-04	5	NA	NA	NA	1.6E-04	3.E-05	NA	3.E-05
Methylene chloride	8.70E-04	1	0.00000047	6.4E-05	3.E-08	2.0E-04	2.E-04	3.E-08	2.E-04
Carbon tetrachloride	4.08E-04	0.1	0.000006	3.0E-05	2.E-07	9.3E-05	9.E-04	2.E-07	9.E-04
Xylenes	2.18E-03	0.1	NA	NA	NA	5.0E-04	5.E-03	NA	5.E-03
Toluene	4.80E-03	5	NA	NA	NA	1.1E-03	2.E-04	NA	2.E-04
1,2-Dibromoethane	ND	0.009	0.0006	ND	ND	ND	ND	ND	ND
Benzene	7.85E-04	0.03	0.0000078	5.7E-05	4.E-07	1.8E-04	6.E-03	4.E-07	6.E-03
Bromoform	ND	NA	0.0000011	ND	ND	ND	ND	ND	ND
Ethylbenzene	5.90E-04	1	0.0000025	4.3E-05	1.E-07	1.3E-04	1.E-04	1.E-07	1.E-04
IsoPropylbenzene	ND	0.4	NA	ND	ND	ND	ND	ND	ND
trans-1,3-Dichloropropene	ND	0.02	0.000004	ND	ND	ND	ND	ND	ND
Naphthalene	1.56E-02	0.003	0.000034	1.1E-03	4.E-05	3.6E-03	1.E+00	4.E-05	1.E+00
1,3-Butadiene	7.10E-05	0.002	0.00003	5.2E-06	2.E-07	1.6E-05	8.E-03	2.E-07	8.E-03
Methyl tert-butyl ether	7.20E-05	3	0.00000026	5.3E-06	1.E-09	1.6E-05	5.E-06	1.E-09	5.E-06
1,1,2-Trichloroethane	ND	NA	0.000016	ND	ND	ND	ND	ND	ND
1,2,4-Trimethylbenzene	7.91E-04	0.007	NA	NA	NA	1.8E-04	3.E-02	NA	3.E-02
1,2-Dichloropropane	ND	0.004	0.00001	ND	ND	ND	ND	ND	ND
1,3-Dichlorobenzene	ND	0.2	NA	ND	ND	ND	ND	ND	ND
1,4-Dichlorobenzene	1.83E-03	0.8	0.000011	1.3E-04	1.E-06	4.2E-04	5.E-04	1.E-06	5.E-04
Bromodichloromethane	3.35E-05	NA	0.000037	2.5E-06	9.E-08	NA	NA	9.E-08	NA
Chlorobenzene	4.60E-05	0.05	NA	NA	NA	1.1E-05	2.E-04	NA	2.E-04
C5-C8 Aliphatic Hydrocarbons	3.20E-02	0.2	NA	NA	NA	7.3E-03	4.E-02	NA	4.E-02
C9-C12 Aliphatic Hydrocarbons	ND	0.2	NA	ND	ND	ND	ND	ND	ND
C9-C10 Aromatic Hydrocarbons	ND	0.05	NA	ND	ND	ND	ND	ND	ND
Total					7.E-05		1.E+00	7.E-05	1.E+00

NA - Not available
NC - Not calculated
ND - Not detected

Exposure and Risk Estimates Associated With Inhalation of Volatile Compounds in Air
UniFirst Corporation
15 Olympia Avenue, Woburn, MA
Commercial/Industrial Worker - Short Term
Indoor Air
Volatilization from Indoor Air
Warehouse
IA-13A

Receptor:	Commercial/Industrial Worker - Short
Medium of Origin:	Indoor Air
Exposure Medium:	Indoor Air
Exposure Area:	Warehouse
Depth:	NA
Duration:	NA

$$C_{air} = \frac{C_{source}}{AF}$$

$$EC_{inh} = \frac{C_{air} \times ET \times EF \times ED}{AT}$$

$$HI_{inh} = \frac{EC_{inh}}{RfC}$$

$$Risk = EC_{inh} \times URF \times CF$$

Parameter	Definition	Units	Value	Comment
ET	Indoor Air Exposure Time	hrs/d	8	
EF	Indoor Air Exposure Frequency	ds/y	250	
ED	Indoor Air Exposure Duration	y	5	
ATc	Indoor Air Averaging Time - Cancer	hrs	683280	
ATn	Indoor Air Averaging Time - Non-Cancer	hrs	43800	
CF	Conversion Factor	ug/mg	1000	

Compound	EPC Indoor Air (mg/m3)	RfC (mg/m3)	URF 1/(ug/m3)	ADE-c mg/m3	Riskinh	ADE-nc mg/m3	HIinh	Risk (Indoor Air)	HI (Indoor Air)
Chloroform	1.32E-04	0.098	0.000023	1.9E-06	4.E-08	3.0E-05	3.E-04	4.E-08	3.E-04
1,1-Dichloroethane	8.90E-05	NA	0.0000016	1.3E-06	2.E-09	NA	NA	2.E-09	NA
1,2-Dichloroethane	4.04E-04	2.4	0.000026	5.9E-06	2.E-07	9.2E-05	4.E-05	2.E-07	4.E-05
1,1-Dichloroethene	3.95E-05	0.2	NA	NA	NA	9.0E-06	5.E-05	NA	5.E-05
Tetrachloroethene	6.02E-02	0.27	0.0000059	8.8E-04	5.E-06	1.4E-02	5.E-02	5.E-06	5.E-02
Trichloroethene	5.10E-04	NA	0.000002	7.5E-06	1.E-08	NA	NA	1.E-08	NA
Vinyl chloride	ND	0.1	0.0000044	ND	ND	ND	ND	ND	ND
trans-1,2-Dichloroethene	3.95E-05	0.06	NA	NA	NA	9.0E-06	2.E-04	NA	2.E-04
cis-1,2-Dichloroethene	1.98E-04	0.035	NA	NA	NA	4.5E-05	1.E-03	NA	1.E-03
1,1,1-Trichloroethane	7.14E-04	5	NA	NA	NA	1.6E-04	3.E-05	NA	3.E-05
Methylene chloride	8.70E-04	1	0.00000047	1.3E-05	6.E-09	2.0E-04	2.E-04	6.E-09	2.E-04
Carbon tetrachloride	4.08E-04	0.1	0.000006	6.0E-06	4.E-08	9.3E-05	9.E-04	4.E-08	9.E-04
Xylenes	2.18E-03	0.1	NA	NA	NA	5.0E-04	5.E-03	NA	5.E-03
Toluene	4.80E-03	5	NA	NA	NA	1.1E-03	2.E-04	NA	2.E-04
1,2-Dibromoethane	ND	0.009	0.0006	ND	ND	ND	ND	ND	ND
Benzene	7.85E-04	0.03	0.0000078	1.1E-05	9.E-08	1.8E-04	6.E-03	9.E-08	6.E-03
Bromoform	ND	NA	0.0000011	ND	ND	ND	ND	ND	ND
Ethylbenzene	5.90E-04	1	0.0000025	8.6E-06	2.E-08	1.3E-04	1.E-04	2.E-08	1.E-04
IsoPropylbenzene	ND	0.4	NA	ND	ND	ND	ND	ND	ND
trans-1,3-Dichloropropene	ND	0.02	0.000004	ND	ND	ND	ND	ND	ND
Naphthalene	1.56E-02	0.003	0.000034	2.3E-04	8.E-06	3.6E-03	1.E+00	8.E-06	1.E+00
1,3-Butadiene	7.10E-05	0.002	0.00003	1.0E-06	3.E-08	1.6E-05	8.E-03	3.E-08	8.E-03
Methyl tert-butyl ether	7.20E-05	3	0.00000026	1.1E-06	3.E-10	1.6E-05	5.E-06	3.E-10	5.E-06
1,1,2-Trichloroethane	ND	NA	0.000016	ND	ND	ND	ND	ND	ND
1,2,4-Trimethylbenzene	7.91E-04	0.007	NA	NA	NA	1.8E-04	3.E-02	NA	3.E-02
1,2-Dichloropropane	ND	0.004	0.00001	ND	ND	ND	ND	ND	ND
1,3-Dichlorobenzene	ND	0.2	NA	ND	ND	ND	ND	ND	ND
1,4-Dichlorobenzene	1.83E-03	0.8	0.000011	2.7E-05	3.E-07	4.2E-04	5.E-04	3.E-07	5.E-04
Bromodichloromethane	3.35E-05	NA	0.000037	4.9E-07	2.E-08	NA	NA	2.E-08	NA
Chlorobenzene	4.60E-05	0.05	NA	NA	NA	1.1E-05	2.E-04	NA	2.E-04
C5-C8 Aliphatic Hydrocarbons	3.20E-02	0.2	NA	NA	NA	7.3E-03	4.E-02	NA	4.E-02
C9-C12 Aliphatic Hydrocarbons	ND	0.2	NA	ND	ND	ND	ND	ND	ND
C9-C10 Aromatic Hydrocarbons	ND	0.05	NA	ND	ND	ND	ND	ND	ND
Total					1.E-05		1.E+00	1.E-05	1.E+00

NA - Not available
NC - Not calculated
ND - Not detected

Exposure and Risk Estimates Associated With Inhalation of Volatile Compounds in Air
UniFirst Corporation
15 Olympia Avenue, Woburn, MA
Resident - Long Term
Indoor Air
Volatilization from Indoor Air
Warehouse
IA-13A

Receptor:	Resident - Long Term
Medium of Origin:	Indoor Air
Exposure Medium:	Indoor Air
Exposure Area:	Warehouse
Depth:	NA
Duration:	NA

$$C_{air} = \frac{C_{source}}{AF}$$

$$EC_{inh} = \frac{C_{air} \times ET \times EF \times ED}{AT}$$

$$HI_{inh} = \frac{EC_{inh}}{RfC}$$

$$Risk = EC_{inh} \times URF \times CF$$

Parameter	Definition	Units	Value	Comment
ET	Indoor Air Exposure Time	hrs/d	24	
EF	Indoor Air Exposure Frequency	ds/y	350	
ED	Indoor Air Exposure Duration	y	30	
ATc	Indoor Air Averaging Time - Cancer	hrs	683280	
ATn	Indoor Air Averaging Time - Non-Cancer	hrs	262800	
CF	Conversion Factor	ug/mg	1000	

Compound	EPC Indoor Air (mg/m3)	RfC (mg/m3)	URF 1/(ug/m3)	ADE-c mg/m3	Riskinh	ADE-nc mg/m3	HIinh	Risk (Indoor Air)	HI (Indoor Air)
Chloroform	1.32E-04	0.098	0.000023	4.9E-05	1.E-06	1.3E-04	1.E-03	1.E-06	1.E-03
1,1-Dichloroethane	8.90E-05	NA	0.0000016	3.3E-05	5.E-08	NA	NA	5.E-08	NA
1,2-Dichloroethane	4.04E-04	2.4	0.000026	1.5E-04	4.E-06	3.9E-04	2.E-04	4.E-06	2.E-04
1,1-Dichloroethene	3.95E-05	0.2	NA	NA	NA	3.8E-05	2.E-04	NA	2.E-04
Tetrachloroethene	6.02E-02	0.27	0.0000059	2.2E-02	1.E-04	5.8E-02	2.E-01	1.E-04	2.E-01
Trichloroethene	5.10E-04	NA	0.000002	1.9E-04	4.E-07	NA	NA	4.E-07	NA
Vinyl chloride	ND	0.1	0.0000044	ND	ND	ND	ND	ND	ND
trans-1,2-Dichloroethene	3.95E-05	0.06	NA	NA	NA	3.8E-05	6.E-04	NA	6.E-04
cis-1,2-Dichloroethene	1.98E-04	0.035	NA	NA	NA	1.9E-04	5.E-03	NA	5.E-03
1,1,1-Trichloroethane	7.14E-04	5	NA	NA	NA	6.8E-04	1.E-04	NA	1.E-04
Methylene chloride	8.70E-04	1	0.00000047	3.2E-04	2.E-07	8.3E-04	8.E-04	2.E-07	8.E-04
Carbon tetrachloride	4.08E-04	0.1	0.000006	1.5E-04	9.E-07	3.9E-04	4.E-03	9.E-07	4.E-03
Xylenes	2.18E-03	0.1	NA	NA	NA	2.1E-03	2.E-02	NA	2.E-02
Toluene	4.80E-03	5	NA	NA	NA	4.6E-03	9.E-04	NA	9.E-04
1,2-Dibromoethane	ND	0.009	0.0006	ND	ND	ND	ND	ND	ND
Benzene	7.85E-04	0.03	0.0000078	2.9E-04	2.E-06	7.5E-04	3.E-02	2.E-06	3.E-02
Bromoform	ND	NA	0.0000011	ND	ND	ND	ND	ND	ND
Ethylbenzene	5.90E-04	1	0.0000025	2.2E-04	5.E-07	5.7E-04	6.E-04	5.E-07	6.E-04
IsoPropylbenzene	ND	0.4	NA	ND	ND	ND	ND	ND	ND
trans-1,3-Dichloropropene	ND	0.02	0.000004	ND	ND	ND	ND	ND	ND
Naphthalene	1.56E-02	0.003	0.000034	5.8E-03	2.E-04	1.5E-02	5.E+00	2.E-04	5.E+00
1,3-Butadiene	7.10E-05	0.002	0.00003	2.6E-05	8.E-07	6.8E-05	3.E-02	8.E-07	3.E-02
Methyl tert-butyl ether	7.20E-05	3	0.00000026	2.7E-05	7.E-09	6.9E-05	2.E-05	7.E-09	2.E-05
1,1,2-Trichloroethane	ND	NA	0.000016	ND	ND	ND	ND	ND	ND
1,2,4-Trimethylbenzene	7.91E-04	0.007	NA	NA	NA	7.6E-04	1.E-01	NA	1.E-01
1,2-Dichloropropane	ND	0.004	0.00001	ND	ND	ND	ND	ND	ND
1,3-Dichlorobenzene	ND	0.2	NA	ND	ND	ND	ND	ND	ND
1,4-Dichlorobenzene	1.83E-03	0.8	0.000011	6.7E-04	7.E-06	1.8E-03	2.E-03	7.E-06	2.E-03
Bromodichloromethane	3.35E-05	NA	0.000037	1.2E-05	5.E-07	NA	NA	5.E-07	NA
Chlorobenzene	4.60E-05	0.05	NA	NA	NA	4.4E-05	9.E-04	NA	9.E-04
C5-C8 Aliphatic Hydrocarbons	3.20E-02	0.2	NA	NA	NA	3.1E-02	2.E-01	NA	2.E-01
C9-C12 Aliphatic Hydrocarbons	ND	0.2	NA	ND	ND	ND	ND	ND	ND
C9-C10 Aromatic Hydrocarbons	ND	0.05	NA	ND	ND	ND	ND	ND	ND
Total					3.E-04		6.E+00	3.E-04	6.E+00

NA - Not available
NC - Not calculated
ND - Not detected

Exposure and Risk Estimates Associated With Inhalation of Volatile Compounds in Air
UniFirst Corporation
15 Olympia Avenue, Woburn, MA
Commercial/Industrial Worker or Storage User - Long Term - Bathroom
Indoor Air
Volatilization from Indoor Air
Bathroom
IA-14

Receptor:	Commercial/Industrial Worker or Stor
Medium of Origin:	Indoor Air
Exposure Medium:	Indoor Air
Exposure Area:	Bathroom
Depth:	NA
Duration:	NA

$$C_{air} = \frac{C_{source}}{AF}$$

$$EC_{inh} = \frac{C_{air} \times ET \times EF \times ED}{AT}$$

$$HI_{inh} = \frac{EC_{inh}}{RfC}$$

$$Risk = EC_{inh} \times URF \times CF$$

Parameter	Definition	Units	Value	Comment
ET	Indoor Air Exposure Time	hrs/d	1	
EF	Indoor Air Exposure Frequency	ds/y	250	
ED	Indoor Air Exposure Duration	y	25	
ATc	Indoor Air Averaging Time - Cancer	hrs	683280	
ATn	Indoor Air Averaging Time - Non-Cancer	hrs	219000	
CF	Conversion Factor	ug/mg	1000	

Compound	EPC Indoor Air (mg/m3)	RfC (mg/m3)	URF 1/(ug/m3)	ADE-c mg/m3	Riskinh	ADE-nc mg/m3	HIinh	Risk (Indoor Air)	HI (Indoor Air)
Chloroform	4.05E-04	0.098	0.000023	3.7E-06	9.E-08	1.2E-05	1.E-04	9.E-08	1.E-04
1,1-Dichloroethane	4.05E-05	NA	0.0000016	3.7E-07	6.E-10	NA	NA	6.E-10	NA
1,2-Dichloroethane	5.30E-04	2.4	0.000026	4.8E-06	1.E-07	1.5E-05	6.E-06	1.E-07	6.E-06
1,1-Dichloroethene	3.95E-05	0.2	NA	NA	NA	1.1E-06	6.E-06	NA	6.E-06
Tetrachloroethene	1.79E-02	0.27	0.0000059	1.6E-04	1.E-06	5.1E-04	2.E-03	1.E-06	2.E-03
Trichloroethene	1.18E-04	NA	0.000002	1.1E-06	2.E-09	NA	NA	2.E-09	NA
Vinyl chloride	ND	0.1	0.0000044	ND	ND	ND	ND	ND	ND
trans-1,2-Dichloroethene	3.95E-05	0.06	NA	NA	NA	1.1E-06	2.E-05	NA	2.E-05
cis-1,2-Dichloroethene	3.95E-05	0.035	NA	NA	NA	1.1E-06	3.E-05	NA	3.E-05
1,1,1-Trichloroethane	2.18E-04	5	NA	NA	NA	6.2E-06	1.E-06	NA	1.E-06
Methylene chloride	8.70E-04	1	0.00000047	8.0E-06	4.E-09	2.5E-05	2.E-05	4.E-09	2.E-05
Carbon tetrachloride	4.40E-04	0.1	0.000006	4.0E-06	2.E-08	1.3E-05	1.E-04	2.E-08	1.E-04
Xylenes	5.11E-03	0.1	NA	NA	NA	1.5E-04	1.E-03	NA	1.E-03
Toluene	9.58E-03	5	NA	NA	NA	2.7E-04	5.E-05	NA	5.E-05
1,2-Dibromoethane	ND	0.009	0.0006	ND	ND	ND	ND	ND	ND
Benzene	9.38E-04	0.03	0.0000078	8.6E-06	7.E-08	2.7E-05	9.E-04	7.E-08	9.E-04
Bromoform	ND	NA	0.0000011	ND	ND	ND	ND	ND	ND
Ethylbenzene	1.43E-03	1	0.0000025	1.3E-05	3.E-08	4.1E-05	4.E-05	3.E-08	4.E-05
IsoPropylbenzene	ND	0.4	NA	ND	ND	ND	ND	ND	ND
trans-1,3-Dichloropropene	ND	0.02	0.000004	ND	ND	ND	ND	ND	ND
Naphthalene	2.68E-03	0.003	0.000034	2.5E-05	8.E-07	7.6E-05	3.E-02	8.E-07	3.E-02
1,3-Butadiene	2.20E-05	0.002	0.00003	2.0E-07	6.E-09	6.3E-07	3.E-04	6.E-09	3.E-04
Methyl tert-butyl ether	2.52E-04	3	0.00000026	2.3E-06	6.E-10	7.2E-06	2.E-06	6.E-10	2.E-06
1,1,2-Trichloroethane	ND	NA	0.000016	ND	ND	ND	ND	ND	ND
1,2,4-Trimethylbenzene	1.41E-03	0.007	NA	NA	NA	4.0E-05	6.E-03	NA	6.E-03
1,2-Dichloropropane	ND	0.004	0.00001	ND	ND	ND	ND	ND	ND
1,3-Dichlorobenzene	ND	0.2	NA	ND	ND	ND	ND	ND	ND
1,4-Dichlorobenzene	4.22E-03	0.8	0.000011	3.9E-05	4.E-07	1.2E-04	2.E-04	4.E-07	2.E-04
Bromodichloromethane	3.35E-05	NA	0.000037	3.1E-07	1.E-08	NA	NA	1.E-08	NA
Chlorobenzene	4.60E-05	0.05	NA	NA	NA	1.3E-06	3.E-05	NA	3.E-05
C5-C8 Aliphatic Hydrocarbons	7.40E-02	0.2	NA	NA	NA	2.1E-03	1.E-02	NA	1.E-02
C9-C12 Aliphatic Hydrocarbons	8.20E-02	0.2	NA	NA	NA	2.3E-03	1.E-02	NA	1.E-02
C9-C10 Aromatic Hydrocarbons	ND	0.05	NA	ND	ND	ND	ND	ND	ND
Total					3.E-06		6.E-02	3.E-06	6.E-02

NA - Not available
NC - Not calculated
ND - Not detected

Exposure and Risk Estimates Associated With Inhalation of Volatile Compounds in Air
UniFirst Corporation
15 Olympia Avenue, Woburn, MA
Commercial/Industrial Worker or Storage User - Short Term - Bathroom
Indoor Air
Volatilization from Indoor Air
Bathroom
IA-14

Receptor:	Commercial/Industrial Worker or Stor
Medium of Origin:	Indoor Air
Exposure Medium:	Indoor Air
Exposure Area:	Bathroom
Depth:	NA
Duration:	NA

$$C_{air} = \frac{C_{source}}{AF}$$

$$EC_{inh} = \frac{C_{air} \times ET \times EF \times ED}{AT}$$

$$HI_{inh} = \frac{EC_{inh}}{RfC}$$

$$Risk = EC_{inh} \times URF \times CF$$

Parameter	Definition	Units	Value	Comment
ET	Indoor Air Exposure Time	hrs/d	1	
EF	Indoor Air Exposure Frequency	ds/y	250	
ED	Indoor Air Exposure Duration	y	5	
ATc	Indoor Air Averaging Time - Cancer	hrs	683280	
ATn	Indoor Air Averaging Time - Non-Cancer	hrs	43800	
CF	Conversion Factor	ug/mg	1000	

Compound	EPC Indoor Air (mg/m3)	RfC (mg/m3)	URF 1/(ug/m3)	ADE-c mg/m3	Riskinh	ADE-nc mg/m3	HIinh	Risk (Indoor Air)	HI (Indoor Air)
Chloroform	4.05E-04	0.098	0.000023	7.4E-07	2.E-08	1.2E-05	1.E-04	2.E-08	1.E-04
1,1-Dichloroethane	4.05E-05	NA	0.0000016	7.4E-08	1.E-10	NA	NA	1.E-10	NA
1,2-Dichloroethane	5.30E-04	2.4	0.000026	9.7E-07	3.E-08	1.5E-05	6.E-06	3.E-08	6.E-06
1,1-Dichloroethene	3.95E-05	0.2	NA	NA	NA	1.1E-06	6.E-06	NA	6.E-06
Tetrachloroethene	1.79E-02	0.27	0.0000059	3.3E-05	2.E-07	5.1E-04	2.E-03	2.E-07	2.E-03
Trichloroethene	1.18E-04	NA	0.000002	2.2E-07	4.E-10	NA	NA	4.E-10	NA
Vinyl chloride	ND	0.1	0.0000044	ND	ND	ND	ND	ND	ND
trans-1,2-Dichloroethene	3.95E-05	0.06	NA	NA	NA	1.1E-06	2.E-05	NA	2.E-05
cis-1,2-Dichloroethene	3.95E-05	0.035	NA	NA	NA	1.1E-06	3.E-05	NA	3.E-05
1,1,1-Trichloroethane	2.18E-04	5	NA	NA	NA	6.2E-06	1.E-06	NA	1.E-06
Methylene chloride	8.70E-04	1	0.00000047	1.6E-06	7.E-10	2.5E-05	2.E-05	7.E-10	2.E-05
Carbon tetrachloride	4.40E-04	0.1	0.000006	8.0E-07	5.E-09	1.3E-05	1.E-04	5.E-09	1.E-04
Xylenes	5.11E-03	0.1	NA	NA	NA	1.5E-04	1.E-03	NA	1.E-03
Toluene	9.58E-03	5	NA	NA	NA	2.7E-04	5.E-05	NA	5.E-05
1,2-Dibromoethane	ND	0.009	0.0006	ND	ND	ND	ND	ND	ND
Benzene	9.38E-04	0.03	0.0000078	1.7E-06	1.E-08	2.7E-05	9.E-04	1.E-08	9.E-04
Bromoform	ND	NA	0.0000011	ND	ND	ND	ND	ND	ND
Ethylbenzene	1.43E-03	1	0.0000025	2.6E-06	7.E-09	4.1E-05	4.E-05	7.E-09	4.E-05
IsoPropylbenzene	ND	0.4	NA	ND	ND	ND	ND	ND	ND
trans-1,3-Dichloropropene	ND	0.02	0.000004	ND	ND	ND	ND	ND	ND
Naphthalene	2.68E-03	0.003	0.000034	4.9E-06	2.E-07	7.6E-05	3.E-02	2.E-07	3.E-02
1,3-Butadiene	2.20E-05	0.002	0.00003	4.0E-08	1.E-09	6.3E-07	3.E-04	1.E-09	3.E-04
Methyl tert-butyl ether	2.52E-04	3	0.00000026	4.6E-07	1.E-10	7.2E-06	2.E-06	1.E-10	2.E-06
1,1,2-Trichloroethane	ND	NA	0.000016	ND	ND	ND	ND	ND	ND
1,2,4-Trimethylbenzene	1.41E-03	0.007	NA	NA	NA	4.0E-05	6.E-03	NA	6.E-03
1,2-Dichloropropane	ND	0.004	0.00001	ND	ND	ND	ND	ND	ND
1,3-Dichlorobenzene	ND	0.2	NA	ND	ND	ND	ND	ND	ND
1,4-Dichlorobenzene	4.22E-03	0.8	0.000011	7.7E-06	8.E-08	1.2E-04	2.E-04	8.E-08	2.E-04
Bromodichloromethane	3.35E-05	NA	0.000037	6.1E-08	2.E-09	NA	NA	2.E-09	NA
Chlorobenzene	4.60E-05	0.05	NA	NA	NA	1.3E-06	3.E-05	NA	3.E-05
C5-C8 Aliphatic Hydrocarbons	7.40E-02	0.2	NA	NA	NA	2.1E-03	1.E-02	NA	1.E-02
C9-C12 Aliphatic Hydrocarbons	8.20E-02	0.2	NA	NA	NA	2.3E-03	1.E-02	NA	1.E-02
C9-C10 Aromatic Hydrocarbons	ND	0.05	NA	ND	ND	ND	ND	ND	ND
Total					5.E-07		6.E-02	5.E-07	6.E-02

NA - Not available
NC - Not calculated
ND - Not detected

Exposure and Risk Estimates Associated With Inhalation of Volatile Compounds in Air
UniFirst Corporation
15 Olympia Avenue, Woburn, MA
Resident - Long Term
Indoor Air
Volatilization from Indoor Air
Bathroom
IA-14

Receptor:	Resident - Long Term
Medium of Origin:	Indoor Air
Exposure Medium:	Indoor Air
Exposure Area:	Bathroom
Depth:	NA
Duration:	NA

$$C_{air} = \frac{C_{source}}{AF}$$

$$EC_{inh} = \frac{C_{air} \times ET \times EF \times ED}{AT}$$

$$HI_{inh} = \frac{EC_{inh}}{RfC}$$

$$Risk = EC_{inh} \times URF \times CF$$

Parameter	Definition	Units	Value	Comment
ET	Indoor Air Exposure Time	hrs/d	24	
EF	Indoor Air Exposure Frequency	ds/y	350	
ED	Indoor Air Exposure Duration	y	30	
ATc	Indoor Air Averaging Time - Cancer	hrs	683280	
ATn	Indoor Air Averaging Time - Non-Cancer	hrs	262800	
CF	Conversion Factor	ug/mg	1000	

Compound	EPC Indoor Air (mg/m3)	RfC (mg/m3)	URF 1/(ug/m3)	ADE-c mg/m3	Riskinh	ADE-nc mg/m3	HIinh	Risk (Indoor Air)	HI (Indoor Air)
Chloroform	4.05E-04	0.098	0.000023	1.5E-04	3.E-06	3.9E-04	4.E-03	3.E-06	4.E-03
1,1-Dichloroethane	4.05E-05	NA	0.0000016	1.5E-05	2.E-08	NA	NA	2.E-08	NA
1,2-Dichloroethane	5.30E-04	2.4	0.000026	2.0E-04	5.E-06	5.1E-04	2.E-04	5.E-06	2.E-04
1,1-Dichloroethene	3.95E-05	0.2	NA	NA	NA	3.8E-05	2.E-04	NA	2.E-04
Tetrachloroethene	1.79E-02	0.27	0.0000059	6.6E-03	4.E-05	1.7E-02	6.E-02	4.E-05	6.E-02
Trichloroethene	1.18E-04	NA	0.000002	4.4E-05	9.E-08	NA	NA	9.E-08	NA
Vinyl chloride	ND	0.1	0.0000044	ND	ND	ND	ND	ND	ND
trans-1,2-Dichloroethene	3.95E-05	0.06	NA	NA	NA	3.8E-05	6.E-04	NA	6.E-04
cis-1,2-Dichloroethene	3.95E-05	0.035	NA	NA	NA	3.8E-05	1.E-03	NA	1.E-03
1,1,1-Trichloroethane	2.18E-04	5	NA	NA	NA	2.1E-04	4.E-05	NA	4.E-05
Methylene chloride	8.70E-04	1	0.00000047	3.2E-04	2.E-07	8.3E-04	8.E-04	2.E-07	8.E-04
Carbon tetrachloride	4.40E-04	0.1	0.000006	1.6E-04	1.E-06	4.2E-04	4.E-03	1.E-06	4.E-03
Xylenes	5.11E-03	0.1	NA	NA	NA	4.9E-03	5.E-02	NA	5.E-02
Toluene	9.58E-03	5	NA	NA	NA	9.2E-03	2.E-03	NA	2.E-03
1,2-Dibromoethane	ND	0.009	0.0006	ND	ND	ND	ND	ND	ND
Benzene	9.38E-04	0.03	0.0000078	3.5E-04	3.E-06	9.0E-04	3.E-02	3.E-06	3.E-02
Bromoform	ND	NA	0.0000011	ND	ND	ND	ND	ND	ND
Ethylbenzene	1.43E-03	1	0.0000025	5.3E-04	1.E-06	1.4E-03	1.E-03	1.E-06	1.E-03
IsoPropylbenzene	ND	0.4	NA	ND	ND	ND	ND	ND	ND
trans-1,3-Dichloropropene	ND	0.02	0.000004	ND	ND	ND	ND	ND	ND
Naphthalene	2.68E-03	0.003	0.000034	9.9E-04	3.E-05	2.6E-03	9.E-01	3.E-05	9.E-01
1,3-Butadiene	2.20E-05	0.002	0.00003	8.1E-06	2.E-07	2.1E-05	1.E-02	2.E-07	1.E-02
Methyl tert-butyl ether	2.52E-04	3	0.00000026	9.3E-05	2.E-08	2.4E-04	8.E-05	2.E-08	8.E-05
1,1,2-Trichloroethane	ND	NA	0.000016	ND	ND	ND	ND	ND	ND
1,2,4-Trimethylbenzene	1.41E-03	0.007	NA	NA	NA	1.4E-03	2.E-01	NA	2.E-01
1,2-Dichloropropane	ND	0.004	0.00001	ND	ND	ND	ND	ND	ND
1,3-Dichlorobenzene	ND	0.2	NA	ND	ND	ND	ND	ND	ND
1,4-Dichlorobenzene	4.22E-03	0.8	0.000011	1.6E-03	2.E-05	4.0E-03	5.E-03	2.E-05	5.E-03
Bromodichloromethane	3.35E-05	NA	0.000037	1.2E-05	5.E-07	NA	NA	5.E-07	NA
Chlorobenzene	4.60E-05	0.05	NA	NA	NA	4.4E-05	9.E-04	NA	9.E-04
C5-C8 Aliphatic Hydrocarbons	7.40E-02	0.2	NA	NA	NA	7.1E-02	4.E-01	NA	4.E-01
C9-C12 Aliphatic Hydrocarbons	8.20E-02	0.2	NA	NA	NA	7.9E-02	4.E-01	NA	4.E-01
C9-C10 Aromatic Hydrocarbons	ND	0.05	NA	ND	ND	ND	ND	ND	ND
Total					1.E-04		2.E+00	1.E-04	2.E+00

NA - Not available
NC - Not calculated
ND - Not detected

Exposure and Risk Estimates Associated With Inhalation of Volatile Compounds in Air
UniFirst Corporation
15 Olympia Avenue, Woburn, MA
Commercial/Industrial Worker - Long Term - Pump Room
Indoor Air
Volatilization from Indoor Air
Pump Room
IA-15

Receptor:	Commercial/Industrial Worker - Long
Medium of Origin:	Indoor Air
Exposure Medium:	Indoor Air
Exposure Area:	Pump Room
Depth:	NA
Duration:	NA

$$C_{air} = \frac{C_{source}}{AF}$$

$$EC_{inh} = \frac{C_{air} \times ET \times EF \times ED}{AT}$$

$$HI_{inh} = \frac{EC_{inh}}{RfC}$$

$$Risk = EC_{inh} \times URF \times CF$$

Parameter	Definition	Units	Value	Comment
ET	Indoor Air Exposure Time	hrs/d	0.5714286	
EF	Indoor Air Exposure Frequency	ds/y	250	
ED	Indoor Air Exposure Duration	y	25	
ATc	Indoor Air Averaging Time - Cancer	hrs	683280	
ATn	Indoor Air Averaging Time - Non-Cancer	hrs	219000	
CF	Conversion Factor	ug/mg	1000	

Compound	EPC Indoor Air (mg/m3)	RfC (mg/m3)	URF 1/(ug/m3)	ADE-c mg/m3	Riskinh	ADE-nc mg/m3	HIinh	Risk (Indoor Air)	HI (Indoor Air)
Chloroform	2.29E-04	0.098	0.000023	1.2E-06	3.E-08	3.7E-06	4.E-05	3.E-08	4.E-05
1,1-Dichloroethane	6.71E-04	NA	0.0000016	3.5E-06	6.E-09	NA	NA	6.E-09	NA
1,2-Dichloroethane	9.30E-05	2.4	0.000026	4.9E-07	1.E-08	1.5E-06	6.E-07	1.E-08	6.E-07
1,1-Dichloroethene	1.31E-04	0.2	NA	NA	NA	2.1E-06	1.E-05	NA	1.E-05
Tetrachloroethene	1.20E-02	0.27	0.0000059	6.3E-05	4.E-07	2.0E-04	7.E-04	4.E-07	7.E-04
Trichloroethene	2.26E-04	NA	0.000002	1.2E-06	2.E-09	NA	NA	2.E-09	NA
Vinyl chloride	ND	0.1	0.0000044	ND	ND	ND	ND	ND	ND
trans-1,2-Dichloroethene	3.95E-05	0.06	NA	NA	NA	6.4E-07	1.E-05	NA	1.E-05
cis-1,2-Dichloroethene	5.70E-04	0.035	NA	NA	NA	9.3E-06	3.E-04	NA	3.E-04
1,1,1-Trichloroethane	1.68E-03	5	NA	NA	NA	2.7E-05	5.E-06	NA	5.E-06
Methylene chloride	8.70E-04	1	0.00000047	4.5E-06	2.E-09	1.4E-05	1.E-05	2.E-09	1.E-05
Carbon tetrachloride	4.21E-04	0.1	0.000006	2.2E-06	1.E-08	6.9E-06	7.E-05	1.E-08	7.E-05
Xylenes	3.33E-03	0.1	NA	NA	NA	5.4E-05	5.E-04	NA	5.E-04
Toluene	4.74E-03	5	NA	NA	NA	7.7E-05	2.E-05	NA	2.E-05
1,2-Dibromoethane	ND	0.009	0.0006	ND	ND	ND	ND	ND	ND
Benzene	6.64E-04	0.03	0.0000078	3.5E-06	3.E-08	1.1E-05	4.E-04	3.E-08	4.E-04
Bromoform	ND	NA	0.0000011	ND	ND	ND	ND	ND	ND
Ethylbenzene	9.68E-04	1	0.0000025	5.1E-06	1.E-08	1.6E-05	2.E-05	1.E-08	2.E-05
IsoPropylbenzene	ND	0.4	NA	ND	ND	ND	ND	ND	ND
trans-1,3-Dichloropropene	ND	0.02	0.000004	ND	ND	ND	ND	ND	ND
Naphthalene	4.98E-04	0.003	0.000034	2.6E-06	9.E-08	8.1E-06	3.E-03	9.E-08	3.E-03
1,3-Butadiene	4.60E-05	0.002	0.00003	2.4E-07	7.E-09	7.5E-07	4.E-04	7.E-09	4.E-04
Methyl tert-butyl ether	7.20E-05	3	0.00000026	3.8E-07	1.E-10	1.2E-06	4.E-07	1.E-10	4.E-07
1,1,2-Trichloroethane	ND	NA	0.000016	ND	ND	ND	ND	ND	ND
1,2,4-Trimethylbenzene	2.11E-04	0.007	NA	NA	NA	3.4E-06	5.E-04	NA	5.E-04
1,2-Dichloropropane	ND	0.004	0.00001	ND	ND	ND	ND	ND	ND
1,3-Dichlorobenzene	ND	0.2	NA	ND	ND	ND	ND	ND	ND
1,4-Dichlorobenzene	3.12E-04	0.8	0.000011	1.6E-06	2.E-08	5.1E-06	6.E-06	2.E-08	6.E-06
Bromodichloromethane	3.35E-05	NA	0.000037	1.8E-07	6.E-09	NA	NA	6.E-09	NA
Chlorobenzene	4.60E-05	0.05	NA	NA	NA	7.5E-07	2.E-05	NA	2.E-05
C5-C8 Aliphatic Hydrocarbons	2.70E-02	0.2	NA	NA	NA	4.4E-04	2.E-03	NA	2.E-03
C9-C12 Aliphatic Hydrocarbons	7.00E-03	0.2	NA	NA	NA	1.1E-04	6.E-04	NA	6.E-04
C9-C10 Aromatic Hydrocarbons	ND	0.05	NA	ND	ND	ND	ND	ND	ND
Total					6.E-07		8.E-03	6.E-07	8.E-03

NA - Not available
NC - Not calculated
ND - Not detected

Exposure and Risk Estimates Associated With Inhalation of Volatile Compounds in Air
UniFirst Corporation
15 Olympia Avenue, Woburn, MA
Commercial/Industrial Worker - Short Term - Pump Room
Indoor Air
Volatilization from Indoor Air
Pump Room
IA-15

Receptor:	Commercial/Industrial Worker - Short
Medium of Origin:	Indoor Air
Exposure Medium:	Indoor Air
Exposure Area:	Pump Room
Depth:	NA
Duration:	NA

$$C_{air} = \frac{C_{source}}{AF}$$

$$EC_{inh} = \frac{C_{air} \times ET \times EF \times ED}{AT}$$

$$HI_{inh} = \frac{EC_{inh}}{RfC}$$

$$Risk = EC_{inh} \times URF \times CF$$

Parameter	Definition	Units	Value	Comment
ET	Indoor Air Exposure Time	hrs/d	0.5714286	
EF	Indoor Air Exposure Frequency	ds/y	250	
ED	Indoor Air Exposure Duration	y	5	
ATc	Indoor Air Averaging Time - Cancer	hrs	683280	
ATn	Indoor Air Averaging Time - Non-Cancer	hrs	43800	
CF	Conversion Factor	ug/mg	1000	

Compound	EPC Indoor Air (mg/m3)	RfC (mg/m3)	URF 1/(ug/m3)	ADE-c mg/m3	Riskinh	ADE-nc mg/m3	HIinh	Risk (Indoor Air)	HI (Indoor Air)
Chloroform	2.29E-04	0.098	0.000023	2.4E-07	6.E-09	3.7E-06	4.E-05	6.E-09	4.E-05
1,1-Dichloroethane	6.71E-04	NA	0.0000016	7.0E-07	1.E-09	NA	NA	1.E-09	NA
1,2-Dichloroethane	9.30E-05	2.4	0.000026	9.7E-08	3.E-09	1.5E-06	6.E-07	3.E-09	6.E-07
1,1-Dichloroethene	1.31E-04	0.2	NA	NA	NA	2.1E-06	1.E-05	NA	1.E-05
Tetrachloroethene	1.20E-02	0.27	0.0000059	1.3E-05	7.E-08	2.0E-04	7.E-04	7.E-08	7.E-04
Trichloroethene	2.26E-04	NA	0.000002	2.4E-07	5.E-10	NA	NA	5.E-10	NA
Vinyl chloride	ND	0.1	0.0000044	ND	ND	ND	ND	ND	ND
trans-1,2-Dichloroethene	3.95E-05	0.06	NA	NA	NA	6.4E-07	1.E-05	NA	1.E-05
cis-1,2-Dichloroethene	5.70E-04	0.035	NA	NA	NA	9.3E-06	3.E-04	NA	3.E-04
1,1,1-Trichloroethane	1.68E-03	5	NA	NA	NA	2.7E-05	5.E-06	NA	5.E-06
Methylene chloride	8.70E-04	1	0.00000047	9.1E-07	4.E-10	1.4E-05	1.E-05	4.E-10	1.E-05
Carbon tetrachloride	4.21E-04	0.1	0.000006	4.4E-07	3.E-09	6.9E-06	7.E-05	3.E-09	7.E-05
Xylenes	3.33E-03	0.1	NA	NA	NA	5.4E-05	5.E-04	NA	5.E-04
Toluene	4.74E-03	5	NA	NA	NA	7.7E-05	2.E-05	NA	2.E-05
1,2-Dibromoethane	ND	0.009	0.0006	ND	ND	ND	ND	ND	ND
Benzene	6.64E-04	0.03	0.0000078	6.9E-07	5.E-09	1.1E-05	4.E-04	5.E-09	4.E-04
Bromoform	ND	NA	0.0000011	ND	ND	ND	ND	ND	ND
Ethylbenzene	9.68E-04	1	0.0000025	1.0E-06	3.E-09	1.6E-05	2.E-05	3.E-09	2.E-05
IsoPropylbenzene	ND	0.4	NA	ND	ND	ND	ND	ND	ND
trans-1,3-Dichloropropene	ND	0.02	0.000004	ND	ND	ND	ND	ND	ND
Naphthalene	4.98E-04	0.003	0.000034	5.2E-07	2.E-08	8.1E-06	3.E-03	2.E-08	3.E-03
1,3-Butadiene	4.60E-05	0.002	0.00003	4.8E-08	1.E-09	7.5E-07	4.E-04	1.E-09	4.E-04
Methyl tert-butyl ether	7.20E-05	3	0.00000026	7.5E-08	2.E-11	1.2E-06	4.E-07	2.E-11	4.E-07
1,1,2-Trichloroethane	ND	NA	0.000016	ND	ND	ND	ND	ND	ND
1,2,4-Trimethylbenzene	2.11E-04	0.007	NA	NA	NA	3.4E-06	5.E-04	NA	5.E-04
1,2-Dichloropropane	ND	0.004	0.00001	ND	ND	ND	ND	ND	ND
1,3-Dichlorobenzene	ND	0.2	NA	ND	ND	ND	ND	ND	ND
1,4-Dichlorobenzene	3.12E-04	0.8	0.000011	3.3E-07	4.E-09	5.1E-06	6.E-06	4.E-09	6.E-06
Bromodichloromethane	3.35E-05	NA	0.000037	3.5E-08	1.E-09	NA	NA	1.E-09	NA
Chlorobenzene	4.60E-05	0.05	NA	NA	NA	7.5E-07	2.E-05	NA	2.E-05
C5-C8 Aliphatic Hydrocarbons	2.70E-02	0.2	NA	NA	NA	4.4E-04	2.E-03	NA	2.E-03
C9-C12 Aliphatic Hydrocarbons	7.00E-03	0.2	NA	NA	NA	1.1E-04	6.E-04	NA	6.E-04
C9-C10 Aromatic Hydrocarbons	ND	0.05	NA	ND	ND	ND	ND	ND	ND
Total					1.E-07		8.E-03	1.E-07	8.E-03

NA - Not available
NC - Not calculated
ND - Not detected

Exposure and Risk Estimates Associated With Inhalation of Volatile Compounds in Air
UniFirst Corporation
15 Olympia Avenue, Woburn, MA
Resident - Long Term
Indoor Air
Volatilization from Indoor Air
Pump Room
IA-15

Receptor:	Resident - Long Term
Medium of Origin:	Indoor Air
Exposure Medium:	Indoor Air
Exposure Area:	Pump Room
Depth:	NA
Duration:	NA

$$C_{air} = \frac{C_{source}}{AF}$$

$$EC_{inh} = \frac{C_{air} \times ET \times EF \times ED}{AT}$$

$$HI_{inh} = \frac{EC_{inh}}{RfC}$$

$$Risk = EC_{inh} \times URF \times CF$$

Parameter	Definition	Units	Value	Comment
ET	Indoor Air Exposure Time	hrs/d	24	
EF	Indoor Air Exposure Frequency	ds/y	350	
ED	Indoor Air Exposure Duration	y	30	
ATc	Indoor Air Averaging Time - Cancer	hrs	683280	
ATn	Indoor Air Averaging Time - Non-Cancer	hrs	262800	
CF	Conversion Factor	ug/mg	1000	

Compound	EPC Indoor Air (mg/m3)	RfC (mg/m3)	URF 1/(ug/m3)	ADE-c mg/m3	Riskinh	ADE-nc mg/m3	HIinh	Risk (Indoor Air)	HI (Indoor Air)
Chloroform	2.29E-04	0.098	0.000023	8.4E-05	2.E-06	2.2E-04	2.E-03	2.E-06	2.E-03
1,1-Dichloroethane	6.71E-04	NA	0.0000016	2.5E-04	4.E-07	NA	NA	4.E-07	NA
1,2-Dichloroethane	9.30E-05	2.4	0.000026	3.4E-05	9.E-07	8.9E-05	4.E-05	9.E-07	4.E-05
1,1-Dichloroethene	1.31E-04	0.2	NA	NA	NA	1.3E-04	6.E-04	NA	6.E-04
Tetrachloroethene	1.20E-02	0.27	0.0000059	4.4E-03	3.E-05	1.2E-02	4.E-02	3.E-05	4.E-02
Trichloroethene	2.26E-04	NA	0.000002	8.3E-05	2.E-07	NA	NA	2.E-07	NA
Vinyl chloride	ND	0.1	0.0000044	ND	ND	ND	ND	ND	ND
trans-1,2-Dichloroethene	3.95E-05	0.06	NA	NA	NA	3.8E-05	6.E-04	NA	6.E-04
cis-1,2-Dichloroethene	5.70E-04	0.035	NA	NA	NA	5.5E-04	2.E-02	NA	2.E-02
1,1,1-Trichloroethane	1.68E-03	5	NA	NA	NA	1.6E-03	3.E-04	NA	3.E-04
Methylene chloride	8.70E-04	1	0.00000047	3.2E-04	2.E-07	8.3E-04	8.E-04	2.E-07	8.E-04
Carbon tetrachloride	4.21E-04	0.1	0.000006	1.6E-04	9.E-07	4.0E-04	4.E-03	9.E-07	4.E-03
Xylenes	3.33E-03	0.1	NA	NA	NA	3.2E-03	3.E-02	NA	3.E-02
Toluene	4.74E-03	5	NA	NA	NA	4.5E-03	9.E-04	NA	9.E-04
1,2-Dibromoethane	ND	0.009	0.0006	ND	ND	ND	ND	ND	ND
Benzene	6.64E-04	0.03	0.0000078	2.4E-04	2.E-06	6.4E-04	2.E-02	2.E-06	2.E-02
Bromoform	ND	NA	0.0000011	ND	ND	ND	ND	ND	ND
Ethylbenzene	9.68E-04	1	0.0000025	3.6E-04	9.E-07	9.3E-04	9.E-04	9.E-07	9.E-04
IsoPropylbenzene	ND	0.4	NA	ND	ND	ND	ND	ND	ND
trans-1,3-Dichloropropene	ND	0.02	0.000004	ND	ND	ND	ND	ND	ND
Naphthalene	4.98E-04	0.003	0.000034	1.8E-04	6.E-06	4.8E-04	2.E-01	6.E-06	2.E-01
1,3-Butadiene	4.60E-05	0.002	0.00003	1.7E-05	5.E-07	4.4E-05	2.E-02	5.E-07	2.E-02
Methyl tert-butyl ether	7.20E-05	3	0.00000026	2.7E-05	7.E-09	6.9E-05	2.E-05	7.E-09	2.E-05
1,1,2-Trichloroethane	ND	NA	0.000016	ND	ND	ND	ND	ND	ND
1,2,4-Trimethylbenzene	2.11E-04	0.007	NA	NA	NA	2.0E-04	3.E-02	NA	3.E-02
1,2-Dichloropropane	ND	0.004	0.00001	ND	ND	ND	ND	ND	ND
1,3-Dichlorobenzene	ND	0.2	NA	ND	ND	ND	ND	ND	ND
1,4-Dichlorobenzene	3.12E-04	0.8	0.000011	1.2E-04	1.E-06	3.0E-04	4.E-04	1.E-06	4.E-04
Bromodichloromethane	3.35E-05	NA	0.000037	1.2E-05	5.E-07	NA	NA	5.E-07	NA
Chlorobenzene	4.60E-05	0.05	NA	NA	NA	4.4E-05	9.E-04	NA	9.E-04
C5-C8 Aliphatic Hydrocarbons	2.70E-02	0.2	NA	NA	NA	2.6E-02	1.E-01	NA	1.E-01
C9-C12 Aliphatic Hydrocarbons	7.00E-03	0.2	NA	NA	NA	6.7E-03	3.E-02	NA	3.E-02
C9-C10 Aromatic Hydrocarbons	ND	0.05	NA	ND	ND	ND	ND	ND	ND
Total					4.E-05		5.E-01	4.E-05	5.E-01

NA - Not available
NC - Not calculated
ND - Not detected

Exposure and Risk Estimates Associated With Inhalation of Volatile Compounds in Air
UniFirst Corporation
15 Olympia Avenue, Woburn, MA
Storage User - Long Term - Warehouse
Indoor Air
Volatilization from Indoor Air
East Side of Building

Receptor:	Storage User - Long Term - Warehou
Medium of Origin:	Indoor Air
Exposure Medium:	Indoor Air
Exposure Area:	East Side of Building
Depth:	NA
Duration:	NA

$$C_{air} = \frac{C_{source}}{AF}$$

$$EC_{inh} = \frac{C_{air} \times ET \times EF \times ED}{AT}$$

$$HI_{inh} = \frac{EC_{inh}}{RfC}$$

$$Risk = EC_{inh} \times URF \times CF$$

Parameter	Definition	Units	Value	Comment
ET	Indoor Air Exposure Time	hrs/d	3	
EF	Indoor Air Exposure Frequency	ds/y	250	
ED	Indoor Air Exposure Duration	y	25	
ATc	Indoor Air Averaging Time - Cancer	hrs	683280	
ATn	Indoor Air Averaging Time - Non-Cancer	hrs	219000	
CF	Conversion Factor	ug/mg	1000	

Compound	EPC Indoor Air (mg/m3)	RfC (mg/m3)	URF 1/(ug/m3)	ADE-c mg/m3	Riskinh	ADE-nc mg/m3	HIinh	Risk (Indoor Air)	HI (Indoor Air)
Chloroform	1.75E-04	0.098	0.000023	4.8E-06	1.E-07	1.5E-05	2.E-04	1.E-07	2.E-04
1,1-Dichloroethane	4.84E-05	NA	0.0000016	1.3E-06	2.E-09	NA	NA	2.E-09	NA
1,2-Dichloroethane	5.50E-04	2.4	0.000026	1.5E-05	4.E-07	4.7E-05	2.E-05	4.E-07	2.E-05
1,1-Dichloroethene	3.95E-05	0.2	NA	NA	NA	3.4E-06	2.E-05	NA	2.E-05
Tetrachloroethene	3.00E-02	0.27	0.0000059	8.2E-04	5.E-06	2.6E-03	1.E-02	5.E-06	1.E-02
Trichloroethene	2.71E-04	NA	0.000002	7.4E-06	1.E-08	NA	NA	1.E-08	NA
Vinyl chloride	ND	0.1	0.0000044	ND	ND	ND	ND	ND	ND
trans-1,2-Dichloroethene	3.95E-05	0.06	NA	NA	NA	3.4E-06	6.E-05	NA	6.E-05
cis-1,2-Dichloroethene	9.07E-05	0.035	NA	NA	NA	7.8E-06	2.E-04	NA	2.E-04
1,1,1-Trichloroethane	4.37E-04	5	NA	NA	NA	3.7E-05	7.E-06	NA	7.E-06
Methylene chloride	1.69E-03	1	0.00000047	4.6E-05	2.E-08	1.4E-04	1.E-04	2.E-08	1.E-04
Carbon tetrachloride	4.31E-04	0.1	0.000006	1.2E-05	7.E-08	3.7E-05	4.E-04	7.E-08	4.E-04
Xylenes	3.34E-03	0.1	NA	NA	NA	2.9E-04	3.E-03	NA	3.E-03
Toluene	9.26E-03	5	NA	NA	NA	7.9E-04	2.E-04	NA	2.E-04
1,2-Dibromoethane	ND	0.009	0.0006	ND	ND	ND	ND	ND	ND
Benzene	9.53E-04	0.03	0.0000078	2.6E-05	2.E-07	8.2E-05	3.E-03	2.E-07	3.E-03
Bromoform	ND	NA	0.0000011	ND	ND	ND	ND	ND	ND
Ethylbenzene	9.04E-04	1	0.0000025	2.5E-05	6.E-08	7.7E-05	8.E-05	6.E-08	8.E-05
IsoPropylbenzene	ND	0.4	NA	ND	ND	ND	ND	ND	ND
trans-1,3-Dichloropropene	ND	0.02	0.000004	ND	ND	ND	ND	ND	ND
Naphthalene	4.32E-03	0.003	0.000034	1.2E-04	4.E-06	3.7E-04	1.E-01	4.E-06	1.E-01
1,3-Butadiene	5.85E-05	0.002	0.00003	1.6E-06	5.E-08	5.0E-06	3.E-03	5.E-08	3.E-03
Methyl tert-butyl ether	1.92E-04	3	0.00000026	5.3E-06	1.E-09	1.6E-05	5.E-06	1.E-09	5.E-06
1,1,2-Trichloroethane	ND	NA	0.000016	ND	ND	ND	ND	ND	ND
1,2,4-Trimethylbenzene	1.04E-03	0.007	NA	NA	NA	8.9E-05	1.E-02	NA	1.E-02
1,2-Dichloropropane	ND	0.004	0.00001	ND	ND	ND	ND	ND	ND
1,3-Dichlorobenzene	ND	0.2	NA	ND	ND	ND	ND	ND	ND
1,4-Dichlorobenzene	3.80E-03	0.8	0.000011	1.0E-04	1.E-06	3.3E-04	4.E-04	1.E-06	4.E-04
Bromodichloromethane	3.35E-05	NA	0.000037	9.2E-07	3.E-08	NA	NA	3.E-08	NA
Chlorobenzene	4.60E-05	0.05	NA	NA	NA	3.9E-06	8.E-05	NA	8.E-05
C5-C8 Aliphatic Hydrocarbons	4.96E-02	0.2	NA	NA	NA	4.2E-03	2.E-02	NA	2.E-02
C9-C12 Aliphatic Hydrocarbons	4.64E-02	0.2	NA	NA	NA	4.0E-03	2.E-02	NA	2.E-02
C9-C10 Aromatic Hydrocarbons	ND	0.05	NA	ND	ND	ND	ND	ND	ND
Total					1.E-05		2.E-01	1.E-05	2.E-01

NA - Not available
NC - Not calculated
ND - Not detected

Exposure and Risk Estimates Associated With Inhalation of Volatile Compounds in Air
UniFirst Corporation
15 Olympia Avenue, Woburn, MA
Storage User - Short Term - Warehouse
Indoor Air
Volatilization from Indoor Air
East Side of Building

Receptor:	Storage User - Short Term - Warehou
Medium of Origin:	Indoor Air
Exposure Medium:	Indoor Air
Exposure Area:	East Side of Building
Depth:	NA
Duration:	NA

$$C_{air} = \frac{C_{source}}{AF}$$

$$EC_{inh} = \frac{C_{air} \times ET \times EF \times ED}{AT}$$

$$HI_{inh} = \frac{EC_{inh}}{RfC}$$

$$Risk = EC_{inh} \times URF \times CF$$

Parameter	Definition	Units	Value	Comment
ET	Indoor Air Exposure Time	hrs/d	3	
EF	Indoor Air Exposure Frequency	ds/y	250	
ED	Indoor Air Exposure Duration	y	5	
ATc	Indoor Air Averaging Time - Cancer	hrs	683280	
ATn	Indoor Air Averaging Time - Non-Cancer	hrs	43800	
CF	Conversion Factor	ug/mg	1000	

Compound	EPC Indoor Air (mg/m3)	RfC (mg/m3)	URF 1/(ug/m3)	ADE-c mg/m3	Riskinh	ADE-nc mg/m3	HIinh	Risk (Indoor Air)	HI (Indoor Air)
Chloroform	1.75E-04	0.098	0.000023	9.6E-07	2.E-08	1.5E-05	2.E-04	2.E-08	2.E-04
1,1-Dichloroethane	4.84E-05	NA	0.0000016	2.7E-07	4.E-10	NA	NA	4.E-10	NA
1,2-Dichloroethane	5.50E-04	2.4	0.000026	3.0E-06	8.E-08	4.7E-05	2.E-05	8.E-08	2.E-05
1,1-Dichloroethene	3.95E-05	0.2	NA	NA	NA	3.4E-06	2.E-05	NA	2.E-05
Tetrachloroethene	3.00E-02	0.27	0.0000059	1.6E-04	1.E-06	2.6E-03	1.E-02	1.E-06	1.E-02
Trichloroethene	2.71E-04	NA	0.000002	1.5E-06	3.E-09	NA	NA	3.E-09	NA
Vinyl chloride	ND	0.1	0.0000044	ND	ND	ND	ND	ND	ND
trans-1,2-Dichloroethene	3.95E-05	0.06	NA	NA	NA	3.4E-06	6.E-05	NA	6.E-05
cis-1,2-Dichloroethene	9.07E-05	0.035	NA	NA	NA	7.8E-06	2.E-04	NA	2.E-04
1,1,1-Trichloroethane	4.37E-04	5	NA	NA	NA	3.7E-05	7.E-06	NA	7.E-06
Methylene chloride	1.69E-03	1	0.00000047	9.3E-06	4.E-09	1.4E-04	1.E-04	4.E-09	1.E-04
Carbon tetrachloride	4.31E-04	0.1	0.000006	2.4E-06	1.E-08	3.7E-05	4.E-04	1.E-08	4.E-04
Xylenes	3.34E-03	0.1	NA	NA	NA	2.9E-04	3.E-03	NA	3.E-03
Toluene	9.26E-03	5	NA	NA	NA	7.9E-04	2.E-04	NA	2.E-04
1,2-Dibromoethane	ND	0.009	0.0006	ND	ND	ND	ND	ND	ND
Benzene	9.53E-04	0.03	0.0000078	5.2E-06	4.E-08	8.2E-05	3.E-03	4.E-08	3.E-03
Bromoform	ND	NA	0.0000011	ND	ND	ND	ND	ND	ND
Ethylbenzene	9.04E-04	1	0.0000025	5.0E-06	1.E-08	7.7E-05	8.E-05	1.E-08	8.E-05
IsoPropylbenzene	ND	0.4	NA	ND	ND	ND	ND	ND	ND
trans-1,3-Dichloropropene	ND	0.02	0.000004	ND	ND	ND	ND	ND	ND
Naphthalene	4.32E-03	0.003	0.000034	2.4E-05	8.E-07	3.7E-04	1.E-01	8.E-07	1.E-01
1,3-Butadiene	5.85E-05	0.002	0.00003	3.2E-07	1.E-08	5.0E-06	3.E-03	1.E-08	3.E-03
Methyl tert-butyl ether	1.92E-04	3	0.00000026	1.1E-06	3.E-10	1.6E-05	5.E-06	3.E-10	5.E-06
1,1,2-Trichloroethane	ND	NA	0.000016	ND	ND	ND	ND	ND	ND
1,2,4-Trimethylbenzene	1.04E-03	0.007	NA	NA	NA	8.9E-05	1.E-02	NA	1.E-02
1,2-Dichloropropane	ND	0.004	0.00001	ND	ND	ND	ND	ND	ND
1,3-Dichlorobenzene	ND	0.2	NA	ND	ND	ND	ND	ND	ND
1,4-Dichlorobenzene	3.80E-03	0.8	0.000011	2.1E-05	2.E-07	3.3E-04	4.E-04	2.E-07	4.E-04
Bromodichloromethane	3.35E-05	NA	0.000037	1.8E-07	7.E-09	NA	NA	7.E-09	NA
Chlorobenzene	4.60E-05	0.05	NA	NA	NA	3.9E-06	8.E-05	NA	8.E-05
C5-C8 Aliphatic Hydrocarbons	4.96E-02	0.2	NA	NA	NA	4.2E-03	2.E-02	NA	2.E-02
C9-C12 Aliphatic Hydrocarbons	4.64E-02	0.2	NA	NA	NA	4.0E-03	2.E-02	NA	2.E-02
C9-C10 Aromatic Hydrocarbons	ND	0.05	NA	ND	ND	ND	ND	ND	ND
Total					2.E-06		2.E-01	2.E-06	2.E-01

NA - Not available
NC - Not calculated
ND - Not detected

Exposure and Risk Estimates Associated With Inhalation of Volatile Compounds in Air
UniFirst Corporation
15 Olympia Avenue, Woburn, MA
Commercial/Industrial Worker - Long Term
Indoor Air
Volatilization from Indoor Air
East Side of Building

Receptor:	Commercial/Industrial Worker - Long
Medium of Origin:	Indoor Air
Exposure Medium:	Indoor Air
Exposure Area:	East Side of Building
Depth:	NA
Duration:	NA

$$C_{air} = \frac{C_{source}}{AF}$$

$$EC_{inh} = \frac{C_{air} \times ET \times EF \times ED}{AT}$$

$$HI_{inh} = \frac{EC_{inh}}{RfC}$$

$$Risk = EC_{inh} \times URF \times CF$$

Parameter	Definition	Units	Value	Comment
ET	Indoor Air Exposure Time	hrs/d	8	
EF	Indoor Air Exposure Frequency	ds/y	250	
ED	Indoor Air Exposure Duration	y	25	
ATc	Indoor Air Averaging Time - Cancer	hrs	683280	
ATn	Indoor Air Averaging Time - Non-Cancer	hrs	219000	
CF	Conversion Factor	ug/mg	1000	

Compound	EPC Indoor Air (mg/m3)	RfC (mg/m3)	URF 1/(ug/m3)	ADE-c mg/m3	Riskinh	ADE-nc mg/m3	HIinh	Risk (Indoor Air)	HI (Indoor Air)
Chloroform	1.75E-04	0.098	0.000023	1.3E-05	3.E-07	4.0E-05	4.E-04	3.E-07	4.E-04
1,1-Dichloroethane	4.84E-05	NA	0.0000016	3.5E-06	6.E-09	NA	NA	6.E-09	NA
1,2-Dichloroethane	5.50E-04	2.4	0.000026	4.0E-05	1.E-06	1.3E-04	5.E-05	1.E-06	5.E-05
1,1-Dichloroethene	3.95E-05	0.2	NA	NA	NA	9.0E-06	5.E-05	NA	5.E-05
Tetrachloroethene	3.00E-02	0.27	0.0000059	2.2E-03	1.E-05	6.8E-03	3.E-02	1.E-05	3.E-02
Trichloroethene	2.71E-04	NA	0.000002	2.0E-05	4.E-08	NA	NA	4.E-08	NA
Vinyl chloride	ND	0.1	0.0000044	ND	ND	ND	ND	ND	ND
trans-1,2-Dichloroethene	3.95E-05	0.06	NA	NA	NA	9.0E-06	2.E-04	NA	2.E-04
cis-1,2-Dichloroethene	9.07E-05	0.035	NA	NA	NA	2.1E-05	6.E-04	NA	6.E-04
1,1,1-Trichloroethane	4.37E-04	5	NA	NA	NA	1.0E-04	2.E-05	NA	2.E-05
Methylene chloride	1.69E-03	1	0.00000047	1.2E-04	6.E-08	3.9E-04	4.E-04	6.E-08	4.E-04
Carbon tetrachloride	4.31E-04	0.1	0.000006	3.2E-05	2.E-07	9.8E-05	1.E-03	2.E-07	1.E-03
Xylenes	3.34E-03	0.1	NA	NA	NA	7.6E-04	8.E-03	NA	8.E-03
Toluene	9.26E-03	5	NA	NA	NA	2.1E-03	4.E-04	NA	4.E-04
1,2-Dibromoethane	ND	0.009	0.0006	ND	ND	ND	ND	ND	ND
Benzene	9.53E-04	0.03	0.0000078	7.0E-05	5.E-07	2.2E-04	7.E-03	5.E-07	7.E-03
Bromoform	ND	NA	0.0000011	ND	ND	ND	ND	ND	ND
Ethylbenzene	9.04E-04	1	0.0000025	6.6E-05	2.E-07	2.1E-04	2.E-04	2.E-07	2.E-04
IsoPropylbenzene	ND	0.4	NA	ND	ND	ND	ND	ND	ND
trans-1,3-Dichloropropene	ND	0.02	0.000004	ND	ND	ND	ND	ND	ND
Naphthalene	4.32E-03	0.003	0.000034	3.2E-04	1.E-05	9.9E-04	3.E-01	1.E-05	3.E-01
1,3-Butadiene	5.85E-05	0.002	0.00003	4.3E-06	1.E-07	1.3E-05	7.E-03	1.E-07	7.E-03
Methyl tert-butyl ether	1.92E-04	3	0.00000026	1.4E-05	4.E-09	4.4E-05	1.E-05	4.E-09	1.E-05
1,1,2-Trichloroethane	ND	NA	0.000016	ND	ND	ND	ND	ND	ND
1,2,4-Trimethylbenzene	1.04E-03	0.007	NA	NA	NA	2.4E-04	3.E-02	NA	3.E-02
1,2-Dichloropropane	ND	0.004	0.00001	ND	ND	ND	ND	ND	ND
1,3-Dichlorobenzene	ND	0.2	NA	ND	ND	ND	ND	ND	ND
1,4-Dichlorobenzene	3.80E-03	0.8	0.000011	2.8E-04	3.E-06	8.7E-04	1.E-03	3.E-06	1.E-03
Bromodichloromethane	3.35E-05	NA	0.000037	2.5E-06	9.E-08	NA	NA	9.E-08	NA
Chlorobenzene	4.60E-05	0.05	NA	NA	NA	1.1E-05	2.E-04	NA	2.E-04
C5-C8 Aliphatic Hydrocarbons	4.96E-02	0.2	NA	NA	NA	1.1E-02	6.E-02	NA	6.E-02
C9-C12 Aliphatic Hydrocarbons	4.64E-02	0.2	NA	NA	NA	1.1E-02	5.E-02	NA	5.E-02
C9-C10 Aromatic Hydrocarbons	ND	0.05	NA	ND	ND	ND	ND	ND	ND
Total					3.E-05		5.E-01	3.E-05	5.E-01

NA - Not available
NC - Not calculated
ND - Not detected

Exposure and Risk Estimates Associated With Inhalation of Volatile Compounds in Air
UniFirst Corporation
15 Olympia Avenue, Woburn, MA
Commercial/Industrial Worker - Short Term
Indoor Air
Volatilization from Indoor Air
East Side of Building

Receptor:	Commercial/Industrial Worker - Short
Medium of Origin:	Indoor Air
Exposure Medium:	Indoor Air
Exposure Area:	East Side of Building
Depth:	NA
Duration:	NA

$$C_{air} = \frac{C_{source}}{AF}$$

$$EC_{inh} = \frac{C_{air} \times ET \times EF \times ED}{AT}$$

$$HI_{inh} = \frac{EC_{inh}}{RfC}$$

$$Risk = EC_{inh} \times URF \times CF$$

Parameter	Definition	Units	Value	Comment
ET	Indoor Air Exposure Time	hrs/d	8	
EF	Indoor Air Exposure Frequency	ds/y	250	
ED	Indoor Air Exposure Duration	y	5	
ATc	Indoor Air Averaging Time - Cancer	hrs	683280	
ATn	Indoor Air Averaging Time - Non-Cancer	hrs	43800	
CF	Conversion Factor	ug/mg	1000	

Compound	EPC Indoor Air (mg/m3)	RfC (mg/m3)	URF 1/(ug/m3)	ADE-c mg/m3	Riskinh	ADE-nc mg/m3	HIinh	Risk (Indoor Air)	HI (Indoor Air)
Chloroform	1.75E-04	0.098	0.000023	2.6E-06	6.E-08	4.0E-05	4.E-04	6.E-08	4.E-04
1,1-Dichloroethane	4.84E-05	NA	0.0000016	7.1E-07	1.E-09	NA	NA	1.E-09	NA
1,2-Dichloroethane	5.50E-04	2.4	0.000026	8.0E-06	2.E-07	1.3E-04	5.E-05	2.E-07	5.E-05
1,1-Dichloroethene	3.95E-05	0.2	NA	NA	NA	9.0E-06	5.E-05	NA	5.E-05
Tetrachloroethene	3.00E-02	0.27	0.0000059	4.4E-04	3.E-06	6.8E-03	3.E-02	3.E-06	3.E-02
Trichloroethene	2.71E-04	NA	0.000002	4.0E-06	8.E-09	NA	NA	8.E-09	NA
Vinyl chloride	ND	0.1	0.0000044	ND	ND	ND	ND	ND	ND
trans-1,2-Dichloroethene	3.95E-05	0.06	NA	NA	NA	9.0E-06	2.E-04	NA	2.E-04
cis-1,2-Dichloroethene	9.07E-05	0.035	NA	NA	NA	2.1E-05	6.E-04	NA	6.E-04
1,1,1-Trichloroethane	4.37E-04	5	NA	NA	NA	1.0E-04	2.E-05	NA	2.E-05
Methylene chloride	1.69E-03	1	0.00000047	2.5E-05	1.E-08	3.9E-04	4.E-04	1.E-08	4.E-04
Carbon tetrachloride	4.31E-04	0.1	0.000006	6.3E-06	4.E-08	9.8E-05	1.E-03	4.E-08	1.E-03
Xylenes	3.34E-03	0.1	NA	NA	NA	7.6E-04	8.E-03	NA	8.E-03
Toluene	9.26E-03	5	NA	NA	NA	2.1E-03	4.E-04	NA	4.E-04
1,2-Dibromoethane	ND	0.009	0.0006	ND	ND	ND	ND	ND	ND
Benzene	9.53E-04	0.03	0.0000078	1.4E-05	1.E-07	2.2E-04	7.E-03	1.E-07	7.E-03
Bromoform	ND	NA	0.0000011	ND	ND	ND	ND	ND	ND
Ethylbenzene	9.04E-04	1	0.0000025	1.3E-05	3.E-08	2.1E-04	2.E-04	3.E-08	2.E-04
IsoPropylbenzene	ND	0.4	NA	ND	ND	ND	ND	ND	ND
trans-1,3-Dichloropropene	ND	0.02	0.000004	ND	ND	ND	ND	ND	ND
Naphthalene	4.32E-03	0.003	0.000034	6.3E-05	2.E-06	9.9E-04	3.E-01	2.E-06	3.E-01
1,3-Butadiene	5.85E-05	0.002	0.00003	8.6E-07	3.E-08	1.3E-05	7.E-03	3.E-08	7.E-03
Methyl tert-butyl ether	1.92E-04	3	0.00000026	2.8E-06	7.E-10	4.4E-05	1.E-05	7.E-10	1.E-05
1,1,2-Trichloroethane	ND	NA	0.000016	ND	ND	ND	ND	ND	ND
1,2,4-Trimethylbenzene	1.04E-03	0.007	NA	NA	NA	2.4E-04	3.E-02	NA	3.E-02
1,2-Dichloropropane	ND	0.004	0.00001	ND	ND	ND	ND	ND	ND
1,3-Dichlorobenzene	ND	0.2	NA	ND	ND	ND	ND	ND	ND
1,4-Dichlorobenzene	3.80E-03	0.8	0.000011	5.6E-05	6.E-07	8.7E-04	1.E-03	6.E-07	1.E-03
Bromodichloromethane	3.35E-05	NA	0.000037	4.9E-07	2.E-08	NA	NA	2.E-08	NA
Chlorobenzene	4.60E-05	0.05	NA	NA	NA	1.1E-05	2.E-04	NA	2.E-04
C5-C8 Aliphatic Hydrocarbons	4.96E-02	0.2	NA	NA	NA	1.1E-02	6.E-02	NA	6.E-02
C9-C12 Aliphatic Hydrocarbons	4.64E-02	0.2	NA	NA	NA	1.1E-02	5.E-02	NA	5.E-02
C9-C10 Aromatic Hydrocarbons	ND	0.05	NA	ND	ND	ND	ND	ND	ND
Total					6.E-06		5.E-01	6.E-06	5.E-01

NA - Not available
NC - Not calculated
ND - Not detected

Exposure and Risk Estimates Associated With Inhalation of Volatile Compounds in Air
UniFirst Corporation
15 Olympia Avenue, Woburn, MA
Resident - Long Term
Indoor Air
Volatilization from Indoor Air
East Side of Building

Receptor:	Resident - Long Term
Medium of Origin:	Indoor Air
Exposure Medium:	Indoor Air
Exposure Area:	East Side of Building
Depth:	NA
Duration:	NA

$$C_{air} = \frac{C_{source}}{AF}$$

$$EC_{inh} = \frac{C_{air} \times ET \times EF \times ED}{AT}$$

$$HI_{inh} = \frac{EC_{inh}}{RfC}$$

$$Risk = EC_{inh} \times URF \times CF$$

Parameter	Definition	Units	Value	Comment
ET	Indoor Air Exposure Time	hrs/d	24	
EF	Indoor Air Exposure Frequency	ds/y	350	
ED	Indoor Air Exposure Duration	y	30	
ATc	Indoor Air Averaging Time - Cancer	hrs	683280	
ATn	Indoor Air Averaging Time - Non-Cancer	hrs	262800	
CF	Conversion Factor	ug/mg	1000	

Compound	EPC Indoor Air (mg/m3)	RfC (mg/m3)	URF 1/(ug/m3)	ADE-c mg/m3	Riskinh	ADE-nc mg/m3	HIinh	Risk (Indoor Air)	HI (Indoor Air)
Chloroform	1.75E-04	0.098	0.000023	6.4E-05	1.E-06	1.7E-04	2.E-03	1.E-06	2.E-03
1,1-Dichloroethane	4.84E-05	NA	0.0000016	1.8E-05	3.E-08	NA	NA	3.E-08	NA
1,2-Dichloroethane	5.50E-04	2.4	0.000026	2.0E-04	5.E-06	5.3E-04	2.E-04	5.E-06	2.E-04
1,1-Dichloroethene	3.95E-05	0.2	NA	NA	NA	3.8E-05	2.E-04	NA	2.E-04
Tetrachloroethene	3.00E-02	0.27	0.0000059	1.1E-02	7.E-05	2.9E-02	1.E-01	7.E-05	1.E-01
Trichloroethene	2.71E-04	NA	0.000002	1.0E-04	2.E-07	NA	NA	2.E-07	NA
Vinyl chloride	ND	0.1	0.0000044	ND	ND	ND	ND	ND	ND
trans-1,2-Dichloroethene	3.95E-05	0.06	NA	NA	NA	3.8E-05	6.E-04	NA	6.E-04
cis-1,2-Dichloroethene	9.07E-05	0.035	NA	NA	NA	8.7E-05	2.E-03	NA	2.E-03
1,1,1-Trichloroethane	4.37E-04	5	NA	NA	NA	4.2E-04	8.E-05	NA	8.E-05
Methylene chloride	1.69E-03	1	0.00000047	6.2E-04	3.E-07	1.6E-03	2.E-03	3.E-07	2.E-03
Carbon tetrachloride	4.31E-04	0.1	0.000006	1.6E-04	1.E-06	4.1E-04	4.E-03	1.E-06	4.E-03
Xylenes	3.34E-03	0.1	NA	NA	NA	3.2E-03	3.E-02	NA	3.E-02
Toluene	9.26E-03	5	NA	NA	NA	8.9E-03	2.E-03	NA	2.E-03
1,2-Dibromoethane	ND	0.009	0.0006	ND	ND	ND	ND	ND	ND
Benzene	9.53E-04	0.03	0.0000078	3.5E-04	3.E-06	9.1E-04	3.E-02	3.E-06	3.E-02
Bromoform	ND	NA	0.0000011	ND	ND	ND	ND	ND	ND
Ethylbenzene	9.04E-04	1	0.0000025	3.3E-04	8.E-07	8.7E-04	9.E-04	8.E-07	9.E-04
IsoPropylbenzene	ND	0.4	NA	ND	ND	ND	ND	ND	ND
trans-1,3-Dichloropropene	ND	0.02	0.000004	ND	ND	ND	ND	ND	ND
Naphthalene	4.32E-03	0.003	0.000034	1.6E-03	5.E-05	4.1E-03	1.E+00	5.E-05	1.E+00
1,3-Butadiene	5.85E-05	0.002	0.00003	2.2E-05	6.E-07	5.6E-05	3.E-02	6.E-07	3.E-02
Methyl tert-butyl ether	1.92E-04	3	0.00000026	7.1E-05	2.E-08	1.8E-04	6.E-05	2.E-08	6.E-05
1,1,2-Trichloroethane	ND	NA	0.000016	ND	ND	ND	ND	ND	ND
1,2,4-Trimethylbenzene	1.04E-03	0.007	NA	NA	NA	1.0E-03	1.E-01	NA	1.E-01
1,2-Dichloropropane	ND	0.004	0.00001	ND	ND	ND	ND	ND	ND
1,3-Dichlorobenzene	ND	0.2	NA	ND	ND	ND	ND	ND	ND
1,4-Dichlorobenzene	3.80E-03	0.8	0.000011	1.4E-03	2.E-05	3.6E-03	5.E-03	2.E-05	5.E-03
Bromodichloromethane	3.35E-05	NA	0.000037	1.2E-05	5.E-07	NA	NA	5.E-07	NA
Chlorobenzene	4.60E-05	0.05	NA	NA	NA	4.4E-05	9.E-04	NA	9.E-04
C5-C8 Aliphatic Hydrocarbons	4.96E-02	0.2	NA	NA	NA	4.8E-02	2.E-01	NA	2.E-01
C9-C12 Aliphatic Hydrocarbons	4.64E-02	0.2	NA	NA	NA	4.4E-02	2.E-01	NA	2.E-01
C9-C10 Aromatic Hydrocarbons	ND	0.05	NA	ND	ND	ND	ND	ND	ND
Total					1.E-04		2.E+00	1.E-04	2.E+00

NA - Not available
NC - Not calculated
ND - Not detected

Exposure and Risk Estimates Associated With Inhalation of Volatile Compounds in Air
UniFirst Corporation
15 Olympia Avenue, Woburn, MA
Storage User - Long Term - Warehouse
Indoor Air
Volatilization from Indoor Air
West Side of Building

Receptor:	Storage User - Long Term - Warehou
Medium of Origin:	Indoor Air
Exposure Medium:	Indoor Air
Exposure Area:	West Side of Building
Depth:	NA
Duration:	NA

$$C_{air} = \frac{C_{source}}{AF}$$

$$EC_{inh} = \frac{C_{air} \times ET \times EF \times ED}{AT}$$

$$HI_{inh} = \frac{EC_{inh}}{RfC}$$

$$Risk = EC_{inh} \times URF \times CF$$

Parameter	Definition	Units	Value	Comment
ET	Indoor Air Exposure Time	hrs/d	3	
EF	Indoor Air Exposure Frequency	ds/y	250	
ED	Indoor Air Exposure Duration	y	25	
ATc	Indoor Air Averaging Time - Cancer	hrs	683280	
ATn	Indoor Air Averaging Time - Non-Cancer	hrs	219000	
CF	Conversion Factor	ug/mg	1000	

Compound	EPC Indoor Air (mg/m3)	RfC (mg/m3)	URF 1/(ug/m3)	ADE-c mg/m3	Riskinh	ADE-nc mg/m3	HIinh	Risk (Indoor Air)	HI (Indoor Air)
Chloroform	2.12E-04	0.098	0.000023	5.8E-06	1.E-07	1.8E-05	2.E-04	1.E-07	2.E-04
1,1-Dichloroethane	4.05E-05	NA	0.0000016	1.1E-06	2.E-09	NA	NA	2.E-09	NA
1,2-Dichloroethane	5.14E-04	2.4	0.000026	1.4E-05	4.E-07	4.4E-05	2.E-05	4.E-07	2.E-05
1,1-Dichloroethene	3.95E-05	0.2	NA	NA	NA	3.4E-06	2.E-05	NA	2.E-05
Tetrachloroethene	5.45E-03	0.27	0.0000059	1.5E-04	9.E-07	4.7E-04	2.E-03	9.E-07	2.E-03
Trichloroethene	8.33E-05	NA	0.000002	2.3E-06	5.E-09	NA	NA	5.E-09	NA
Vinyl chloride	ND	0.1	0.0000044	ND	ND	ND	ND	ND	ND
trans-1,2-Dichloroethene	3.95E-05	0.06	NA	NA	NA	3.4E-06	6.E-05	NA	6.E-05
cis-1,2-Dichloroethene	3.95E-05	0.035	NA	NA	NA	3.4E-06	1.E-04	NA	1.E-04
1,1,1-Trichloroethane	2.47E-04	5	NA	NA	NA	2.1E-05	4.E-06	NA	4.E-06
Methylene chloride	2.72E-03	1	0.00000047	7.5E-05	4.E-08	2.3E-04	2.E-04	4.E-08	2.E-04
Carbon tetrachloride	4.42E-04	0.1	0.000006	1.2E-05	7.E-08	3.8E-05	4.E-04	7.E-08	4.E-04
Xylenes	3.21E-03	0.1	NA	NA	NA	2.7E-04	3.E-03	NA	3.E-03
Toluene	7.32E-03	5	NA	NA	NA	6.3E-04	1.E-04	NA	1.E-04
1,2-Dibromoethane	ND	0.009	0.0006	ND	ND	ND	ND	ND	ND
Benzene	9.80E-04	0.03	0.0000078	2.7E-05	2.E-07	8.4E-05	3.E-03	2.E-07	3.E-03
Bromoform	ND	NA	0.0000011	ND	ND	ND	ND	ND	ND
Ethylbenzene	9.22E-04	1	0.0000025	2.5E-05	6.E-08	7.9E-05	8.E-05	6.E-08	8.E-05
IsoPropylbenzene	ND	0.4	NA	ND	ND	ND	ND	ND	ND
trans-1,3-Dichloropropene	ND	0.02	0.000004	ND	ND	ND	ND	ND	ND
Naphthalene	1.68E-03	0.003	0.000034	4.6E-05	2.E-06	1.4E-04	5.E-02	2.E-06	5.E-02
1,3-Butadiene	5.73E-05	0.002	0.00003	1.6E-06	5.E-08	4.9E-06	2.E-03	5.E-08	2.E-03
Methyl tert-butyl ether	5.77E-04	3	0.00000026	1.6E-05	4.E-09	4.9E-05	2.E-05	4.E-09	2.E-05
1,1,2-Trichloroethane	ND	NA	0.000016	ND	ND	ND	ND	ND	ND
1,2,4-Trimethylbenzene	9.71E-04	0.007	NA	NA	NA	8.3E-05	1.E-02	NA	1.E-02
1,2-Dichloropropane	ND	0.004	0.00001	ND	ND	ND	ND	ND	ND
1,3-Dichlorobenzene	ND	0.2	NA	ND	ND	ND	ND	ND	ND
1,4-Dichlorobenzene	2.31E-02	0.8	0.000011	6.3E-04	7.E-06	2.0E-03	2.E-03	7.E-06	2.E-03
Bromodichloromethane	3.35E-05	NA	0.000037	9.2E-07	3.E-08	NA	NA	3.E-08	NA
Chlorobenzene	4.60E-05	0.05	NA	NA	NA	3.9E-06	8.E-05	NA	8.E-05
C5-C8 Aliphatic Hydrocarbons	6.38E-02	0.2	NA	NA	NA	5.5E-03	3.E-02	NA	3.E-02
C9-C12 Aliphatic Hydrocarbons	5.95E-02	0.2	NA	NA	NA	5.1E-03	3.E-02	NA	3.E-02
C9-C10 Aromatic Hydrocarbons	ND	0.05	NA	ND	ND	ND	ND	ND	ND
Total					1.E-05		1.E-01	1.E-05	1.E-01

NA - Not available
NC - Not calculated
ND - Not detected

Exposure and Risk Estimates Associated With Inhalation of Volatile Compounds in Air
UniFirst Corporation
15 Olympia Avenue, Woburn, MA
Storage User - Short Term - Warehouse
Indoor Air
Volatilization from Indoor Air
West Side of Building

Receptor:	Storage User - Short Term - Warehou
Medium of Origin:	Indoor Air
Exposure Medium:	Indoor Air
Exposure Area:	West Side of Building
Depth:	NA
Duration:	NA

$$C_{air} = \frac{C_{source}}{AF}$$

$$EC_{inh} = \frac{C_{air} \times ET \times EF \times ED}{AT}$$

$$HI_{inh} = \frac{EC_{inh}}{RfC}$$

$$Risk = EC_{inh} \times URF \times CF$$

Parameter	Definition	Units	Value	Comment
ET	Indoor Air Exposure Time	hrs/d	3	
EF	Indoor Air Exposure Frequency	ds/y	250	
ED	Indoor Air Exposure Duration	y	5	
ATc	Indoor Air Averaging Time - Cancer	hrs	683280	
ATn	Indoor Air Averaging Time - Non-Cancer	hrs	43800	
CF	Conversion Factor	ug/mg	1000	

Compound	EPC Indoor Air (mg/m3)	RfC (mg/m3)	URF 1/(ug/m3)	ADE-c mg/m3	Riskinh	ADE-nc mg/m3	HIinh	Risk (Indoor Air)	HI (Indoor Air)
Chloroform	2.12E-04	0.098	0.000023	1.2E-06	3.E-08	1.8E-05	2.E-04	3.E-08	2.E-04
1,1-Dichloroethane	4.05E-05	NA	0.0000016	2.2E-07	4.E-10	NA	NA	4.E-10	NA
1,2-Dichloroethane	5.14E-04	2.4	0.000026	2.8E-06	7.E-08	4.4E-05	2.E-05	7.E-08	2.E-05
1,1-Dichloroethene	3.95E-05	0.2	NA	NA	NA	3.4E-06	2.E-05	NA	2.E-05
Tetrachloroethene	5.45E-03	0.27	0.0000059	3.0E-05	2.E-07	4.7E-04	2.E-03	2.E-07	2.E-03
Trichloroethene	8.33E-05	NA	0.000002	4.6E-07	9.E-10	NA	NA	9.E-10	NA
Vinyl chloride	ND	0.1	0.0000044	ND	ND	ND	ND	ND	ND
trans-1,2-Dichloroethene	3.95E-05	0.06	NA	NA	NA	3.4E-06	6.E-05	NA	6.E-05
cis-1,2-Dichloroethene	3.95E-05	0.035	NA	NA	NA	3.4E-06	1.E-04	NA	1.E-04
1,1,1-Trichloroethane	2.47E-04	5	NA	NA	NA	2.1E-05	4.E-06	NA	4.E-06
Methylene chloride	2.72E-03	1	0.00000047	1.5E-05	7.E-09	2.3E-04	2.E-04	7.E-09	2.E-04
Carbon tetrachloride	4.42E-04	0.1	0.000006	2.4E-06	1.E-08	3.8E-05	4.E-04	1.E-08	4.E-04
Xylenes	3.21E-03	0.1	NA	NA	NA	2.7E-04	3.E-03	NA	3.E-03
Toluene	7.32E-03	5	NA	NA	NA	6.3E-04	1.E-04	NA	1.E-04
1,2-Dibromoethane	ND	0.009	0.0006	ND	ND	ND	ND	ND	ND
Benzene	9.80E-04	0.03	0.0000078	5.4E-06	4.E-08	8.4E-05	3.E-03	4.E-08	3.E-03
Bromoform	ND	NA	0.0000011	ND	ND	ND	ND	ND	ND
Ethylbenzene	9.22E-04	1	0.0000025	5.1E-06	1.E-08	7.9E-05	8.E-05	1.E-08	8.E-05
IsoPropylbenzene	ND	0.4	NA	ND	ND	ND	ND	ND	ND
trans-1,3-Dichloropropene	ND	0.02	0.000004	ND	ND	ND	ND	ND	ND
Naphthalene	1.68E-03	0.003	0.000034	9.2E-06	3.E-07	1.4E-04	5.E-02	3.E-07	5.E-02
1,3-Butadiene	5.73E-05	0.002	0.00003	3.1E-07	9.E-09	4.9E-06	2.E-03	9.E-09	2.E-03
Methyl tert-butyl ether	5.77E-04	3	0.00000026	3.2E-06	8.E-10	4.9E-05	2.E-05	8.E-10	2.E-05
1,1,2-Trichloroethane	ND	NA	0.000016	ND	ND	ND	ND	ND	ND
1,2,4-Trimethylbenzene	9.71E-04	0.007	NA	NA	NA	8.3E-05	1.E-02	NA	1.E-02
1,2-Dichloropropane	ND	0.004	0.00001	ND	ND	ND	ND	ND	ND
1,3-Dichlorobenzene	ND	0.2	NA	ND	ND	ND	ND	ND	ND
1,4-Dichlorobenzene	2.31E-02	0.8	0.000011	1.3E-04	1.E-06	2.0E-03	2.E-03	1.E-06	2.E-03
Bromodichloromethane	3.35E-05	NA	0.000037	1.8E-07	7.E-09	NA	NA	7.E-09	NA
Chlorobenzene	4.60E-05	0.05	NA	NA	NA	3.9E-06	8.E-05	NA	8.E-05
C5-C8 Aliphatic Hydrocarbons	6.38E-02	0.2	NA	NA	NA	5.5E-03	3.E-02	NA	3.E-02
C9-C12 Aliphatic Hydrocarbons	5.95E-02	0.2	NA	NA	NA	5.1E-03	3.E-02	NA	3.E-02
C9-C10 Aromatic Hydrocarbons	ND	0.05	NA	ND	ND	ND	ND	ND	ND
Total					2.E-06		1.E-01	2.E-06	1.E-01

NA - Not available
NC - Not calculated
ND - Not detected

Exposure and Risk Estimates Associated With Inhalation of Volatile Compounds in Air
UniFirst Corporation
15 Olympia Avenue, Woburn, MA
Commercial/Industrial Worker - Long Term
Indoor Air
Volatilization from Indoor Air
West Side of Building

Receptor:	Commercial/Industrial Worker - Long
Medium of Origin:	Indoor Air
Exposure Medium:	Indoor Air
Exposure Area:	West Side of Building
Depth:	NA
Duration:	NA

$$C_{air} = \frac{C_{source}}{AF}$$

$$EC_{inh} = \frac{C_{air} \times ET \times EF \times ED}{AT}$$

$$HI_{inh} = \frac{EC_{inh}}{RfC}$$

$$Risk = EC_{inh} \times URF \times CF$$

Parameter	Definition	Units	Value	Comment
ET	Indoor Air Exposure Time	hrs/d	8	
EF	Indoor Air Exposure Frequency	ds/y	250	
ED	Indoor Air Exposure Duration	y	25	
ATc	Indoor Air Averaging Time - Cancer	hrs	683280	
ATn	Indoor Air Averaging Time - Non-Cancer	hrs	219000	
CF	Conversion Factor	ug/mg	1000	

Compound	EPC Indoor Air (mg/m3)	RfC (mg/m3)	URF 1/(ug/m3)	ADE-c mg/m3	Riskinh	ADE-nc mg/m3	HIinh	Risk (Indoor Air)	HI (Indoor Air)
Chloroform	2.12E-04	0.098	0.000023	1.6E-05	4.E-07	4.8E-05	5.E-04	4.E-07	5.E-04
1,1-Dichloroethane	4.05E-05	NA	0.0000016	3.0E-06	5.E-09	NA	NA	5.E-09	NA
1,2-Dichloroethane	5.14E-04	2.4	0.000026	3.8E-05	1.E-06	1.2E-04	5.E-05	1.E-06	5.E-05
1,1-Dichloroethene	3.95E-05	0.2	NA	NA	NA	9.0E-06	5.E-05	NA	5.E-05
Tetrachloroethene	5.45E-03	0.27	0.0000059	4.0E-04	2.E-06	1.2E-03	5.E-03	2.E-06	5.E-03
Trichloroethene	8.33E-05	NA	0.000002	6.1E-06	1.E-08	NA	NA	1.E-08	NA
Vinyl chloride	ND	0.1	0.0000044	ND	ND	ND	ND	ND	ND
trans-1,2-Dichloroethene	3.95E-05	0.06	NA	NA	NA	9.0E-06	2.E-04	NA	2.E-04
cis-1,2-Dichloroethene	3.95E-05	0.035	NA	NA	NA	9.0E-06	3.E-04	NA	3.E-04
1,1,1-Trichloroethane	2.47E-04	5	NA	NA	NA	5.6E-05	1.E-05	NA	1.E-05
Methylene chloride	2.72E-03	1	0.00000047	2.0E-04	9.E-08	6.2E-04	6.E-04	9.E-08	6.E-04
Carbon tetrachloride	4.42E-04	0.1	0.000006	3.2E-05	2.E-07	1.0E-04	1.E-03	2.E-07	1.E-03
Xylenes	3.21E-03	0.1	NA	NA	NA	7.3E-04	7.E-03	NA	7.E-03
Toluene	7.32E-03	5	NA	NA	NA	1.7E-03	3.E-04	NA	3.E-04
1,2-Dibromoethane	ND	0.009	0.0006	ND	ND	ND	ND	ND	ND
Benzene	9.80E-04	0.03	0.0000078	7.2E-05	6.E-07	2.2E-04	7.E-03	6.E-07	7.E-03
Bromoform	ND	NA	0.0000011	ND	ND	ND	ND	ND	ND
Ethylbenzene	9.22E-04	1	0.0000025	6.7E-05	2.E-07	2.1E-04	2.E-04	2.E-07	2.E-04
IsoPropylbenzene	ND	0.4	NA	ND	ND	ND	ND	ND	ND
trans-1,3-Dichloropropene	ND	0.02	0.000004	ND	ND	ND	ND	ND	ND
Naphthalene	1.68E-03	0.003	0.000034	1.2E-04	4.E-06	3.8E-04	1.E-01	4.E-06	1.E-01
1,3-Butadiene	5.73E-05	0.002	0.00003	4.2E-06	1.E-07	1.3E-05	7.E-03	1.E-07	7.E-03
Methyl tert-butyl ether	5.77E-04	3	0.00000026	4.2E-05	1.E-08	1.3E-04	4.E-05	1.E-08	4.E-05
1,1,2-Trichloroethane	ND	NA	0.000016	ND	ND	ND	ND	ND	ND
1,2,4-Trimethylbenzene	9.71E-04	0.007	NA	NA	NA	2.2E-04	3.E-02	NA	3.E-02
1,2-Dichloropropane	ND	0.004	0.00001	ND	ND	ND	ND	ND	ND
1,3-Dichlorobenzene	ND	0.2	NA	ND	ND	ND	ND	ND	ND
1,4-Dichlorobenzene	2.31E-02	0.8	0.000011	1.7E-03	2.E-05	5.3E-03	7.E-03	2.E-05	7.E-03
Bromodichloromethane	3.35E-05	NA	0.000037	2.5E-06	9.E-08	NA	NA	9.E-08	NA
Chlorobenzene	4.60E-05	0.05	NA	NA	NA	1.1E-05	2.E-04	NA	2.E-04
C5-C8 Aliphatic Hydrocarbons	6.38E-02	0.2	NA	NA	NA	1.5E-02	7.E-02	NA	7.E-02
C9-C12 Aliphatic Hydrocarbons	5.95E-02	0.2	NA	NA	NA	1.4E-02	7.E-02	NA	7.E-02
C9-C10 Aromatic Hydrocarbons	ND	0.05	NA	ND	ND	ND	ND	ND	ND
Total					3.E-05		3.E-01	3.E-05	3.E-01

NA - Not available
NC - Not calculated
ND - Not detected

Exposure and Risk Estimates Associated With Inhalation of Volatile Compounds in Air
UniFirst Corporation
15 Olympia Avenue, Woburn, MA
Commercial/Industrial Worker - Short Term
Indoor Air
Volatilization from Indoor Air
West Side of Building

Receptor:	Commercial/Industrial Worker - Short
Medium of Origin:	Indoor Air
Exposure Medium:	Indoor Air
Exposure Area:	West Side of Building
Depth:	NA
Duration:	NA

$$C_{air} = \frac{C_{source}}{AF}$$

$$EC_{inh} = \frac{C_{air} \times ET \times EF \times ED}{AT}$$

$$HI_{inh} = \frac{EC_{inh}}{RfC}$$

$$Risk = EC_{inh} \times URF \times CF$$

Parameter	Definition	Units	Value	Comment
ET	Indoor Air Exposure Time	hrs/d	8	
EF	Indoor Air Exposure Frequency	ds/y	250	
ED	Indoor Air Exposure Duration	y	5	
ATc	Indoor Air Averaging Time - Cancer	hrs	683280	
ATn	Indoor Air Averaging Time - Non-Cancer	hrs	43800	
CF	Conversion Factor	ug/mg	1000	

Compound	EPC Indoor Air (mg/m3)	RfC (mg/m3)	URF 1/(ug/m3)	ADE-c mg/m3	Riskinh	ADE-nc mg/m3	HIinh	Risk (Indoor Air)	HI (Indoor Air)
Chloroform	2.12E-04	0.098	0.000023	3.1E-06	7.E-08	4.8E-05	5.E-04	7.E-08	5.E-04
1,1-Dichloroethane	4.05E-05	NA	0.0000016	5.9E-07	9.E-10	NA	NA	9.E-10	NA
1,2-Dichloroethane	5.14E-04	2.4	0.000026	7.5E-06	2.E-07	1.2E-04	5.E-05	2.E-07	5.E-05
1,1-Dichloroethene	3.95E-05	0.2	NA	NA	NA	9.0E-06	5.E-05	NA	5.E-05
Tetrachloroethene	5.45E-03	0.27	0.0000059	8.0E-05	5.E-07	1.2E-03	5.E-03	5.E-07	5.E-03
Trichloroethene	8.33E-05	NA	0.000002	1.2E-06	2.E-09	NA	NA	2.E-09	NA
Vinyl chloride	ND	0.1	0.0000044	ND	ND	ND	ND	ND	ND
trans-1,2-Dichloroethene	3.95E-05	0.06	NA	NA	NA	9.0E-06	2.E-04	NA	2.E-04
cis-1,2-Dichloroethene	3.95E-05	0.035	NA	NA	NA	9.0E-06	3.E-04	NA	3.E-04
1,1,1-Trichloroethane	2.47E-04	5	NA	NA	NA	5.6E-05	1.E-05	NA	1.E-05
Methylene chloride	2.72E-03	1	0.00000047	4.0E-05	2.E-08	6.2E-04	6.E-04	2.E-08	6.E-04
Carbon tetrachloride	4.42E-04	0.1	0.000006	6.5E-06	4.E-08	1.0E-04	1.E-03	4.E-08	1.E-03
Xylenes	3.21E-03	0.1	NA	NA	NA	7.3E-04	7.E-03	NA	7.E-03
Toluene	7.32E-03	5	NA	NA	NA	1.7E-03	3.E-04	NA	3.E-04
1,2-Dibromoethane	ND	0.009	0.0006	ND	ND	ND	ND	ND	ND
Benzene	9.80E-04	0.03	0.0000078	1.4E-05	1.E-07	2.2E-04	7.E-03	1.E-07	7.E-03
Bromoform	ND	NA	0.0000011	ND	ND	ND	ND	ND	ND
Ethylbenzene	9.22E-04	1	0.0000025	1.3E-05	3.E-08	2.1E-04	2.E-04	3.E-08	2.E-04
IsoPropylbenzene	ND	0.4	NA	ND	ND	ND	ND	ND	ND
trans-1,3-Dichloropropene	ND	0.02	0.000004	ND	ND	ND	ND	ND	ND
Naphthalene	1.68E-03	0.003	0.000034	2.5E-05	8.E-07	3.8E-04	1.E-01	8.E-07	1.E-01
1,3-Butadiene	5.73E-05	0.002	0.00003	8.4E-07	3.E-08	1.3E-05	7.E-03	3.E-08	7.E-03
Methyl tert-butyl ether	5.77E-04	3	0.00000026	8.4E-06	2.E-09	1.3E-04	4.E-05	2.E-09	4.E-05
1,1,2-Trichloroethane	ND	NA	0.000016	ND	ND	ND	ND	ND	ND
1,2,4-Trimethylbenzene	9.71E-04	0.007	NA	NA	NA	2.2E-04	3.E-02	NA	3.E-02
1,2-Dichloropropane	ND	0.004	0.00001	ND	ND	ND	ND	ND	ND
1,3-Dichlorobenzene	ND	0.2	NA	ND	ND	ND	ND	ND	ND
1,4-Dichlorobenzene	2.31E-02	0.8	0.000011	3.4E-04	4.E-06	5.3E-03	7.E-03	4.E-06	7.E-03
Bromodichloromethane	3.35E-05	NA	0.000037	4.9E-07	2.E-08	NA	NA	2.E-08	NA
Chlorobenzene	4.60E-05	0.05	NA	NA	NA	1.1E-05	2.E-04	NA	2.E-04
C5-C8 Aliphatic Hydrocarbons	6.38E-02	0.2	NA	NA	NA	1.5E-02	7.E-02	NA	7.E-02
C9-C12 Aliphatic Hydrocarbons	5.95E-02	0.2	NA	NA	NA	1.4E-02	7.E-02	NA	7.E-02
C9-C10 Aromatic Hydrocarbons	ND	0.05	NA	ND	ND	ND	ND	ND	ND
Total					6.E-06		3.E-01	6.E-06	3.E-01

NA - Not available
NC - Not calculated
ND - Not detected

Exposure and Risk Estimates Associated With Inhalation of Volatile Compounds in Air
UniFirst Corporation
15 Olympia Avenue, Woburn, MA
Resident - Long Term
Indoor Air
Volatilization from Indoor Air
West Side of Building

Receptor:	Resident - Long Term
Medium of Origin:	Indoor Air
Exposure Medium:	Indoor Air
Exposure Area:	West Side of Building
Depth:	NA
Duration:	NA

$$C_{air} = \frac{C_{source}}{AF}$$

$$EC_{inh} = \frac{C_{air} \times ET \times EF \times ED}{AT}$$

$$HI_{inh} = \frac{EC_{inh}}{RfC}$$

$$Risk = EC_{inh} \times URF \times CF$$

Parameter	Definition	Units	Value	Comment
ET	Indoor Air Exposure Time	hrs/d	24	
EF	Indoor Air Exposure Frequency	ds/y	350	
ED	Indoor Air Exposure Duration	y	30	
ATc	Indoor Air Averaging Time - Cancer	hrs	683280	
ATn	Indoor Air Averaging Time - Non-Cancer	hrs	262800	
CF	Conversion Factor	ug/mg	1000	

Compound	EPC Indoor Air (mg/m3)	RfC (mg/m3)	URF 1/(ug/m3)	ADE-c mg/m3	Riskinh	ADE-nc mg/m3	HIinh	Risk (Indoor Air)	HI (Indoor Air)
Chloroform	2.12E-04	0.098	0.000023	7.8E-05	2.E-06	2.0E-04	2.E-03	2.E-06	2.E-03
1,1-Dichloroethane	4.05E-05	NA	0.0000016	1.5E-05	2.E-08	NA	NA	2.E-08	NA
1,2-Dichloroethane	5.14E-04	2.4	0.000026	1.9E-04	5.E-06	4.9E-04	2.E-04	5.E-06	2.E-04
1,1-Dichloroethene	3.95E-05	0.2	NA	NA	NA	3.8E-05	2.E-04	NA	2.E-04
Tetrachloroethene	5.45E-03	0.27	0.0000059	2.0E-03	1.E-05	5.2E-03	2.E-02	1.E-05	2.E-02
Trichloroethene	8.33E-05	NA	0.000002	3.1E-05	6.E-08	NA	NA	6.E-08	NA
Vinyl chloride	ND	0.1	0.0000044	ND	ND	ND	ND	ND	ND
trans-1,2-Dichloroethene	3.95E-05	0.06	NA	NA	NA	3.8E-05	6.E-04	NA	6.E-04
cis-1,2-Dichloroethene	3.95E-05	0.035	NA	NA	NA	3.8E-05	1.E-03	NA	1.E-03
1,1,1-Trichloroethane	2.47E-04	5	NA	NA	NA	2.4E-04	5.E-05	NA	5.E-05
Methylene chloride	2.72E-03	1	0.00000047	1.0E-03	5.E-07	2.6E-03	3.E-03	5.E-07	3.E-03
Carbon tetrachloride	4.42E-04	0.1	0.000006	1.6E-04	1.E-06	4.2E-04	4.E-03	1.E-06	4.E-03
Xylenes	3.21E-03	0.1	NA	NA	NA	3.1E-03	3.E-02	NA	3.E-02
Toluene	7.32E-03	5	NA	NA	NA	7.0E-03	1.E-03	NA	1.E-03
1,2-Dibromoethane	ND	0.009	0.0006	ND	ND	ND	ND	ND	ND
Benzene	9.80E-04	0.03	0.0000078	3.6E-04	3.E-06	9.4E-04	3.E-02	3.E-06	3.E-02
Bromoform	ND	NA	0.0000011	ND	ND	ND	ND	ND	ND
Ethylbenzene	9.22E-04	1	0.0000025	3.4E-04	8.E-07	8.8E-04	9.E-04	8.E-07	9.E-04
IsoPropylbenzene	ND	0.4	NA	ND	ND	ND	ND	ND	ND
trans-1,3-Dichloropropene	ND	0.02	0.000004	ND	ND	ND	ND	ND	ND
Naphthalene	1.68E-03	0.003	0.000034	6.2E-04	2.E-05	1.6E-03	5.E-01	2.E-05	5.E-01
1,3-Butadiene	5.73E-05	0.002	0.00003	2.1E-05	6.E-07	5.5E-05	3.E-02	6.E-07	3.E-02
Methyl tert-butyl ether	5.77E-04	3	0.00000026	2.1E-04	6.E-08	5.5E-04	2.E-04	6.E-08	2.E-04
1,1,2-Trichloroethane	ND	NA	0.000016	ND	ND	ND	ND	ND	ND
1,2,4-Trimethylbenzene	9.71E-04	0.007	NA	NA	NA	9.3E-04	1.E-01	NA	1.E-01
1,2-Dichloropropane	ND	0.004	0.00001	ND	ND	ND	ND	ND	ND
1,3-Dichlorobenzene	ND	0.2	NA	ND	ND	ND	ND	ND	ND
1,4-Dichlorobenzene	2.31E-02	0.8	0.000011	8.5E-03	9.E-05	2.2E-02	3.E-02	9.E-05	3.E-02
Bromodichloromethane	3.35E-05	NA	0.000037	1.2E-05	5.E-07	NA	NA	5.E-07	NA
Chlorobenzene	4.60E-05	0.05	NA	NA	NA	4.4E-05	9.E-04	NA	9.E-04
C5-C8 Aliphatic Hydrocarbons	6.38E-02	0.2	NA	NA	NA	6.1E-02	3.E-01	NA	3.E-01
C9-C12 Aliphatic Hydrocarbons	5.95E-02	0.2	NA	NA	NA	5.7E-02	3.E-01	NA	3.E-01
C9-C10 Aromatic Hydrocarbons	ND	0.05	NA	ND	ND	ND	ND	ND	ND
Total					1.E-04		1.E+00	1.E-04	1.E+00

NA - Not available
NC - Not calculated
ND - Not detected

Exposure and Risk Estimates Associated With Inhalation of Volatile Compounds in Air
UniFirst Corporation
15 Olympia Avenue, Woburn, MA
Storage User - Long Term - Warehouse
Indoor Air
Volatilization from Indoor Air
Entire Building

Receptor:	Storage User - Long Term - Warehou
Medium of Origin:	Indoor Air
Exposure Medium:	Indoor Air
Exposure Area:	Entire Building
Depth:	NA
Duration:	NA

$$C_{air} = \frac{C_{source}}{AF}$$

$$EC_{inh} = \frac{C_{air} \times ET \times EF \times ED}{AT}$$

$$HI_{inh} = \frac{EC_{inh}}{RfC}$$

$$Risk = EC_{inh} \times URF \times CF$$

Parameter	Definition	Units	Value	Comment
ET	Indoor Air Exposure Time	hrs/d	3	
EF	Indoor Air Exposure Frequency	ds/y	250	
ED	Indoor Air Exposure Duration	y	25	
ATc	Indoor Air Averaging Time - Cancer	hrs	683280	
ATn	Indoor Air Averaging Time - Non-Cancer	hrs	219000	
CF	Conversion Factor	ug/mg	1000	

Compound	EPC Indoor Air (mg/m3)	RfC (mg/m3)	URF 1/(ug/m3)	ADE-c mg/m3	Riskinh	ADE-nc mg/m3	HIinh	Risk (Indoor Air)	HI (Indoor Air)
Chloroform	1.87E-04	0.098	0.000023	5.1E-06	1.E-07	1.6E-05	2.E-04	1.E-07	2.E-04
1,1-Dichloroethane	8.32E-05	NA	0.0000016	2.3E-06	4.E-09	NA	NA	4.E-09	NA
1,2-Dichloroethane	5.14E-04	2.4	0.000026	1.4E-05	4.E-07	4.4E-05	2.E-05	4.E-07	2.E-05
1,1-Dichloroethene	4.49E-05	0.2	NA	NA	NA	3.8E-06	2.E-05	NA	2.E-05
Tetrachloroethene	2.32E-02	0.27	0.0000059	6.4E-04	4.E-06	2.0E-03	7.E-03	4.E-06	7.E-03
Trichloroethene	2.24E-04	NA	0.000002	6.2E-06	1.E-08	NA	NA	1.E-08	NA
Vinyl chloride	ND	0.1	0.0000044	ND	ND	ND	ND	ND	ND
trans-1,2-Dichloroethene	3.95E-05	0.06	NA	NA	NA	3.4E-06	6.E-05	NA	6.E-05
cis-1,2-Dichloroethene	1.07E-04	0.035	NA	NA	NA	9.1E-06	3.E-04	NA	3.E-04
1,1,1-Trichloroethane	4.65E-04	5	NA	NA	NA	4.0E-05	8.E-06	NA	8.E-06
Methylene chloride	1.88E-03	1	0.00000047	5.2E-05	2.E-08	1.6E-04	2.E-04	2.E-08	2.E-04
Carbon tetrachloride	4.33E-04	0.1	0.000006	1.2E-05	7.E-08	3.7E-05	4.E-04	7.E-08	4.E-04
Xylenes	3.31E-03	0.1	NA	NA	NA	2.8E-04	3.E-03	NA	3.E-03
Toluene	8.54E-03	5	NA	NA	NA	7.3E-04	1.E-04	NA	1.E-04
1,2-Dibromoethane	ND	0.009	0.0006	ND	ND	ND	ND	ND	ND
Benzene	9.43E-04	0.03	0.0000078	2.6E-05	2.E-07	8.1E-05	3.E-03	2.E-07	3.E-03
Bromoform	ND	NA	0.0000011	ND	ND	ND	ND	ND	ND
Ethylbenzene	9.12E-04	1	0.0000025	2.5E-05	6.E-08	7.8E-05	8.E-05	6.E-08	8.E-05
IsoPropylbenzene	ND	0.4	NA	ND	ND	ND	ND	ND	ND
trans-1,3-Dichloropropene	ND	0.02	0.000004	ND	ND	ND	ND	ND	ND
Naphthalene	3.48E-03	0.003	0.000034	9.5E-05	3.E-06	3.0E-04	1.E-01	3.E-06	1.E-01
1,3-Butadiene	5.75E-05	0.002	0.00003	1.6E-06	5.E-08	4.9E-06	2.E-03	5.E-08	2.E-03
Methyl tert-butyl ether	2.75E-04	3	0.00000026	7.6E-06	2.E-09	2.4E-05	8.E-06	2.E-09	8.E-06
1,1,2-Trichloroethane	ND	NA	0.000016	ND	ND	ND	ND	ND	ND
1,2,4-Trimethylbenzene	9.77E-04	0.007	NA	NA	NA	8.4E-05	1.E-02	NA	1.E-02
1,2-Dichloropropane	ND	0.004	0.00001	ND	ND	ND	ND	ND	ND
1,3-Dichlorobenzene	ND	0.2	NA	ND	ND	ND	ND	ND	ND
1,4-Dichlorobenzene	8.13E-03	0.8	0.000011	2.2E-04	2.E-06	7.0E-04	9.E-04	2.E-06	9.E-04
Bromodichloromethane	3.35E-05	NA	0.000037	9.2E-07	3.E-08	NA	NA	3.E-08	NA
Chlorobenzene	4.60E-05	0.05	NA	NA	NA	3.9E-06	8.E-05	NA	8.E-05
C5-C8 Aliphatic Hydrocarbons	5.16E-02	0.2	NA	NA	NA	4.4E-03	2.E-02	NA	2.E-02
C9-C12 Aliphatic Hydrocarbons	4.73E-02	0.2	NA	NA	NA	4.0E-03	2.E-02	NA	2.E-02
C9-C10 Aromatic Hydrocarbons	ND	0.05	NA	ND	ND	ND	ND	ND	ND
Total					1.E-05		2.E-01	1.E-05	2.E-01

NA - Not available
NC - Not calculated
ND - Not detected

Exposure and Risk Estimates Associated With Inhalation of Volatile Compounds in Air
UniFirst Corporation
15 Olympia Avenue, Woburn, MA
Storage User - Short Term - Warehouse
Indoor Air
Volatilization from Indoor Air
Entire Building

Receptor:	Storage User - Short Term - Warehou
Medium of Origin:	Indoor Air
Exposure Medium:	Indoor Air
Exposure Area:	Entire Building
Depth:	NA
Duration:	NA

$$C_{air} = \frac{C_{source}}{AF}$$

$$EC_{inh} = \frac{C_{air} \times ET \times EF \times ED}{AT}$$

$$HI_{inh} = \frac{EC_{inh}}{RfC}$$

$$Risk = EC_{inh} \times URF \times CF$$

Parameter	Definition	Units	Value	Comment
ET	Indoor Air Exposure Time	hrs/d	3	
EF	Indoor Air Exposure Frequency	ds/y	250	
ED	Indoor Air Exposure Duration	y	5	
ATc	Indoor Air Averaging Time - Cancer	hrs	683280	
ATn	Indoor Air Averaging Time - Non-Cancer	hrs	43800	
CF	Conversion Factor	ug/mg	1000	

Compound	EPC Indoor Air (mg/m3)	RfC (mg/m3)	URF 1/(ug/m3)	ADE-c mg/m3	Riskinh	ADE-nc mg/m3	HIinh	Risk (Indoor Air)	HI (Indoor Air)
Chloroform	1.87E-04	0.098	0.000023	1.0E-06	2.E-08	1.6E-05	2.E-04	2.E-08	2.E-04
1,1-Dichloroethane	8.32E-05	NA	0.0000016	4.6E-07	7.E-10	NA	NA	7.E-10	NA
1,2-Dichloroethane	5.14E-04	2.4	0.000026	2.8E-06	7.E-08	4.4E-05	2.E-05	7.E-08	2.E-05
1,1-Dichloroethene	4.49E-05	0.2	NA	NA	NA	3.8E-06	2.E-05	NA	2.E-05
Tetrachloroethene	2.32E-02	0.27	0.0000059	1.3E-04	8.E-07	2.0E-03	7.E-03	8.E-07	7.E-03
Trichloroethene	2.24E-04	NA	0.000002	1.2E-06	2.E-09	NA	NA	2.E-09	NA
Vinyl chloride	ND	0.1	0.0000044	ND	ND	ND	ND	ND	ND
trans-1,2-Dichloroethene	3.95E-05	0.06	NA	NA	NA	3.4E-06	6.E-05	NA	6.E-05
cis-1,2-Dichloroethene	1.07E-04	0.035	NA	NA	NA	9.1E-06	3.E-04	NA	3.E-04
1,1,1-Trichloroethane	4.65E-04	5	NA	NA	NA	4.0E-05	8.E-06	NA	8.E-06
Methylene chloride	1.88E-03	1	0.00000047	1.0E-05	5.E-09	1.6E-04	2.E-04	5.E-09	2.E-04
Carbon tetrachloride	4.33E-04	0.1	0.000006	2.4E-06	1.E-08	3.7E-05	4.E-04	1.E-08	4.E-04
Xylenes	3.31E-03	0.1	NA	NA	NA	2.8E-04	3.E-03	NA	3.E-03
Toluene	8.54E-03	5	NA	NA	NA	7.3E-04	1.E-04	NA	1.E-04
1,2-Dibromoethane	ND	0.009	0.0006	ND	ND	ND	ND	ND	ND
Benzene	9.43E-04	0.03	0.0000078	5.2E-06	4.E-08	8.1E-05	3.E-03	4.E-08	3.E-03
Bromoform	ND	NA	0.0000011	ND	ND	ND	ND	ND	ND
Ethylbenzene	9.12E-04	1	0.0000025	5.0E-06	1.E-08	7.8E-05	8.E-05	1.E-08	8.E-05
IsoPropylbenzene	ND	0.4	NA	ND	ND	ND	ND	ND	ND
trans-1,3-Dichloropropene	ND	0.02	0.000004	ND	ND	ND	ND	ND	ND
Naphthalene	3.48E-03	0.003	0.000034	1.9E-05	6.E-07	3.0E-04	1.E-01	6.E-07	1.E-01
1,3-Butadiene	5.75E-05	0.002	0.00003	3.2E-07	9.E-09	4.9E-06	2.E-03	9.E-09	2.E-03
Methyl tert-butyl ether	2.75E-04	3	0.00000026	1.5E-06	4.E-10	2.4E-05	8.E-06	4.E-10	8.E-06
1,1,2-Trichloroethane	ND	NA	0.000016	ND	ND	ND	ND	ND	ND
1,2,4-Trimethylbenzene	9.77E-04	0.007	NA	NA	NA	8.4E-05	1.E-02	NA	1.E-02
1,2-Dichloropropane	ND	0.004	0.00001	ND	ND	ND	ND	ND	ND
1,3-Dichlorobenzene	ND	0.2	NA	ND	ND	ND	ND	ND	ND
1,4-Dichlorobenzene	8.13E-03	0.8	0.000011	4.5E-05	5.E-07	7.0E-04	9.E-04	5.E-07	9.E-04
Bromodichloromethane	3.35E-05	NA	0.000037	1.8E-07	7.E-09	NA	NA	7.E-09	NA
Chlorobenzene	4.60E-05	0.05	NA	NA	NA	3.9E-06	8.E-05	NA	8.E-05
C5-C8 Aliphatic Hydrocarbons	5.16E-02	0.2	NA	NA	NA	4.4E-03	2.E-02	NA	2.E-02
C9-C12 Aliphatic Hydrocarbons	4.73E-02	0.2	NA	NA	NA	4.0E-03	2.E-02	NA	2.E-02
C9-C10 Aromatic Hydrocarbons	ND	0.05	NA	ND	ND	ND	ND	ND	ND
Total					2.E-06		2.E-01	2.E-06	2.E-01

NA - Not available
NC - Not calculated
ND - Not detected

Exposure and Risk Estimates Associated With Inhalation of Volatile Compounds in Air
UniFirst Corporation
15 Olympia Avenue, Woburn, MA
Commercial/Industrial Worker - Long Term
Indoor Air
Volatilization from Indoor Air
Entire Building

Receptor:	Commercial/Industrial Worker - Long
Medium of Origin:	Indoor Air
Exposure Medium:	Indoor Air
Exposure Area:	Entire Building
Depth:	NA
Duration:	NA

$$C_{air} = \frac{C_{source}}{AF}$$

$$EC_{inh} = \frac{C_{air} \times ET \times EF \times ED}{AT}$$

$$HI_{inh} = \frac{EC_{inh}}{RfC}$$

$$Risk = EC_{inh} \times URF \times CF$$

Parameter	Definition	Units	Value	Comment
ET	Indoor Air Exposure Time	hrs/d	8	
EF	Indoor Air Exposure Frequency	ds/y	250	
ED	Indoor Air Exposure Duration	y	25	
ATc	Indoor Air Averaging Time - Cancer	hrs	683280	
ATn	Indoor Air Averaging Time - Non-Cancer	hrs	219000	
CF	Conversion Factor	ug/mg	1000	

Compound	EPC Indoor Air (mg/m3)	RfC (mg/m3)	URF 1/(ug/m3)	ADE-c mg/m3	Riskinh	ADE-nc mg/m3	HIinh	Risk (Indoor Air)	HI (Indoor Air)
Chloroform	1.87E-04	0.098	0.000023	1.4E-05	3.E-07	4.3E-05	4.E-04	3.E-07	4.E-04
1,1-Dichloroethane	8.32E-05	NA	0.0000016	6.1E-06	1.E-08	NA	NA	1.E-08	NA
1,2-Dichloroethane	5.14E-04	2.4	0.000026	3.8E-05	1.E-06	1.2E-04	5.E-05	1.E-06	5.E-05
1,1-Dichloroethene	4.49E-05	0.2	NA	NA	NA	1.0E-05	5.E-05	NA	5.E-05
Tetrachloroethene	2.32E-02	0.27	0.0000059	1.7E-03	1.E-05	5.3E-03	2.E-02	1.E-05	2.E-02
Trichloroethene	2.24E-04	NA	0.000002	1.6E-05	3.E-08	NA	NA	3.E-08	NA
Vinyl chloride	ND	0.1	0.0000044	ND	ND	ND	ND	ND	ND
trans-1,2-Dichloroethene	3.95E-05	0.06	NA	NA	NA	9.0E-06	2.E-04	NA	2.E-04
cis-1,2-Dichloroethene	1.07E-04	0.035	NA	NA	NA	2.4E-05	7.E-04	NA	7.E-04
1,1,1-Trichloroethane	4.65E-04	5	NA	NA	NA	1.1E-04	2.E-05	NA	2.E-05
Methylene chloride	1.88E-03	1	0.00000047	1.4E-04	6.E-08	4.3E-04	4.E-04	6.E-08	4.E-04
Carbon tetrachloride	4.33E-04	0.1	0.000006	3.2E-05	2.E-07	9.9E-05	1.E-03	2.E-07	1.E-03
Xylenes	3.31E-03	0.1	NA	NA	NA	7.6E-04	8.E-03	NA	8.E-03
Toluene	8.54E-03	5	NA	NA	NA	1.9E-03	4.E-04	NA	4.E-04
1,2-Dibromoethane	ND	0.009	0.0006	ND	ND	ND	ND	ND	ND
Benzene	9.43E-04	0.03	0.0000078	6.9E-05	5.E-07	2.2E-04	7.E-03	5.E-07	7.E-03
Bromoform	ND	NA	0.0000011	ND	ND	ND	ND	ND	ND
Ethylbenzene	9.12E-04	1	0.0000025	6.7E-05	2.E-07	2.1E-04	2.E-04	2.E-07	2.E-04
IsoPropylbenzene	ND	0.4	NA	ND	ND	ND	ND	ND	ND
trans-1,3-Dichloropropene	ND	0.02	0.000004	ND	ND	ND	ND	ND	ND
Naphthalene	3.48E-03	0.003	0.000034	2.5E-04	9.E-06	7.9E-04	3.E-01	9.E-06	3.E-01
1,3-Butadiene	5.75E-05	0.002	0.00003	4.2E-06	1.E-07	1.3E-05	7.E-03	1.E-07	7.E-03
Methyl tert-butyl ether	2.75E-04	3	0.00000026	2.0E-05	5.E-09	6.3E-05	2.E-05	5.E-09	2.E-05
1,1,2-Trichloroethane	ND	NA	0.000016	ND	ND	ND	ND	ND	ND
1,2,4-Trimethylbenzene	9.77E-04	0.007	NA	NA	NA	2.2E-04	3.E-02	NA	3.E-02
1,2-Dichloropropane	ND	0.004	0.00001	ND	ND	ND	ND	ND	ND
1,3-Dichlorobenzene	ND	0.2	NA	ND	ND	ND	ND	ND	ND
1,4-Dichlorobenzene	8.13E-03	0.8	0.000011	5.9E-04	7.E-06	1.9E-03	2.E-03	7.E-06	2.E-03
Bromodichloromethane	3.35E-05	NA	0.000037	2.5E-06	9.E-08	NA	NA	9.E-08	NA
Chlorobenzene	4.60E-05	0.05	NA	NA	NA	1.1E-05	2.E-04	NA	2.E-04
C5-C8 Aliphatic Hydrocarbons	5.16E-02	0.2	NA	NA	NA	1.2E-02	6.E-02	NA	6.E-02
C9-C12 Aliphatic Hydrocarbons	4.73E-02	0.2	NA	NA	NA	1.1E-02	5.E-02	NA	5.E-02
C9-C10 Aromatic Hydrocarbons	ND	0.05	NA	ND	ND	ND	ND	ND	ND
Total					3.E-05		5.E-01	3.E-05	5.E-01

NA - Not available
NC - Not calculated
ND - Not detected

Exposure and Risk Estimates Associated With Inhalation of Volatile Compounds in Air
UniFirst Corporation
15 Olympia Avenue, Woburn, MA
Commercial/Industrial Worker - Short Term
Indoor Air
Volatilization from Indoor Air
Entire Building

Receptor:	Commercial/Industrial Worker - Short
Medium of Origin:	Indoor Air
Exposure Medium:	Indoor Air
Exposure Area:	Entire Building
Depth:	NA
Duration:	NA

$$C_{air} = \frac{C_{source}}{AF}$$

$$EC_{inh} = \frac{C_{air} \times ET \times EF \times ED}{AT}$$

$$HI_{inh} = \frac{EC_{inh}}{RfC}$$

$$Risk = EC_{inh} \times URF \times CF$$

Parameter	Definition	Units	Value	Comment
ET	Indoor Air Exposure Time	hrs/d	8	
EF	Indoor Air Exposure Frequency	ds/y	250	
ED	Indoor Air Exposure Duration	y	5	
ATc	Indoor Air Averaging Time - Cancer	hrs	683280	
ATn	Indoor Air Averaging Time - Non-Cancer	hrs	43800	
CF	Conversion Factor	ug/mg	1000	

Compound	EPC Indoor Air (mg/m3)	RfC (mg/m3)	URF 1/(ug/m3)	ADE-c mg/m3	Riskinh	ADE-nc mg/m3	HIinh	Risk (Indoor Air)	HI (Indoor Air)
Chloroform	1.87E-04	0.098	0.000023	2.7E-06	6.E-08	4.3E-05	4.E-04	6.E-08	4.E-04
1,1-Dichloroethane	8.32E-05	NA	0.0000016	1.2E-06	2.E-09	NA	NA	2.E-09	NA
1,2-Dichloroethane	5.14E-04	2.4	0.000026	7.5E-06	2.E-07	1.2E-04	5.E-05	2.E-07	5.E-05
1,1-Dichloroethene	4.49E-05	0.2	NA	NA	NA	1.0E-05	5.E-05	NA	5.E-05
Tetrachloroethene	2.32E-02	0.27	0.0000059	3.4E-04	2.E-06	5.3E-03	2.E-02	2.E-06	2.E-02
Trichloroethene	2.24E-04	NA	0.000002	3.3E-06	7.E-09	NA	NA	7.E-09	NA
Vinyl chloride	ND	0.1	0.0000044	ND	ND	ND	ND	ND	ND
trans-1,2-Dichloroethene	3.95E-05	0.06	NA	NA	NA	9.0E-06	2.E-04	NA	2.E-04
cis-1,2-Dichloroethene	1.07E-04	0.035	NA	NA	NA	2.4E-05	7.E-04	NA	7.E-04
1,1,1-Trichloroethane	4.65E-04	5	NA	NA	NA	1.1E-04	2.E-05	NA	2.E-05
Methylene chloride	1.88E-03	1	0.00000047	2.8E-05	1.E-08	4.3E-04	4.E-04	1.E-08	4.E-04
Carbon tetrachloride	4.33E-04	0.1	0.000006	6.3E-06	4.E-08	9.9E-05	1.E-03	4.E-08	1.E-03
Xylenes	3.31E-03	0.1	NA	NA	NA	7.6E-04	8.E-03	NA	8.E-03
Toluene	8.54E-03	5	NA	NA	NA	1.9E-03	4.E-04	NA	4.E-04
1,2-Dibromoethane	ND	0.009	0.0006	ND	ND	ND	ND	ND	ND
Benzene	9.43E-04	0.03	0.0000078	1.4E-05	1.E-07	2.2E-04	7.E-03	1.E-07	7.E-03
Bromoform	ND	NA	0.0000011	ND	ND	ND	ND	ND	ND
Ethylbenzene	9.12E-04	1	0.0000025	1.3E-05	3.E-08	2.1E-04	2.E-04	3.E-08	2.E-04
IsoPropylbenzene	ND	0.4	NA	ND	ND	ND	ND	ND	ND
trans-1,3-Dichloropropene	ND	0.02	0.000004	ND	ND	ND	ND	ND	ND
Naphthalene	3.48E-03	0.003	0.000034	5.1E-05	2.E-06	7.9E-04	3.E-01	2.E-06	3.E-01
1,3-Butadiene	5.75E-05	0.002	0.00003	8.4E-07	3.E-08	1.3E-05	7.E-03	3.E-08	7.E-03
Methyl tert-butyl ether	2.75E-04	3	0.00000026	4.0E-06	1.E-09	6.3E-05	2.E-05	1.E-09	2.E-05
1,1,2-Trichloroethane	ND	NA	0.000016	ND	ND	ND	ND	ND	ND
1,2,4-Trimethylbenzene	9.77E-04	0.007	NA	NA	NA	2.2E-04	3.E-02	NA	3.E-02
1,2-Dichloropropane	ND	0.004	0.00001	ND	ND	ND	ND	ND	ND
1,3-Dichlorobenzene	ND	0.2	NA	ND	ND	ND	ND	ND	ND
1,4-Dichlorobenzene	8.13E-03	0.8	0.000011	1.2E-04	1.E-06	1.9E-03	2.E-03	1.E-06	2.E-03
Bromodichloromethane	3.35E-05	NA	0.000037	4.9E-07	2.E-08	NA	NA	2.E-08	NA
Chlorobenzene	4.60E-05	0.05	NA	NA	NA	1.1E-05	2.E-04	NA	2.E-04
C5-C8 Aliphatic Hydrocarbons	5.16E-02	0.2	NA	NA	NA	1.2E-02	6.E-02	NA	6.E-02
C9-C12 Aliphatic Hydrocarbons	4.73E-02	0.2	NA	NA	NA	1.1E-02	5.E-02	NA	5.E-02
C9-C10 Aromatic Hydrocarbons	ND	0.05	NA	ND	ND	ND	ND	ND	ND
Total					6.E-06		5.E-01	6.E-06	5.E-01

NA - Not available
NC - Not calculated
ND - Not detected

Exposure and Risk Estimates Associated With Inhalation of Volatile Compounds in Air
UniFirst Corporation
15 Olympia Avenue, Woburn, MA
Resident - Long Term
Indoor Air
Volatilization from Indoor Air
Entire Building

Receptor:	Resident - Long Term
Medium of Origin:	Indoor Air
Exposure Medium:	Indoor Air
Exposure Area:	Entire Building
Depth:	NA
Duration:	NA

$$C_{air} = \frac{C_{source}}{AF}$$

$$EC_{inh} = \frac{C_{air} \times ET \times EF \times ED}{AT}$$

$$HI_{inh} = \frac{EC_{inh}}{RfC}$$

$$Risk = EC_{inh} \times URF \times CF$$

Parameter	Definition	Units	Value	Comment
ET	Indoor Air Exposure Time	hrs/d	24	
EF	Indoor Air Exposure Frequency	ds/y	350	
ED	Indoor Air Exposure Duration	y	30	
ATc	Indoor Air Averaging Time - Cancer	hrs	683280	
ATn	Indoor Air Averaging Time - Non-Cancer	hrs	262800	
CF	Conversion Factor	ug/mg	1000	

Compound	EPC Indoor Air (mg/m3)	RfC (mg/m3)	URF 1/(ug/m3)	ADE-c mg/m3	Riskinh	ADE-nc mg/m3	HIinh	Risk (Indoor Air)	HI (Indoor Air)
Chloroform	1.87E-04	0.098	0.000023	6.9E-05	2.E-06	1.8E-04	2.E-03	2.E-06	2.E-03
1,1-Dichloroethane	8.32E-05	NA	0.0000016	3.1E-05	5.E-08	NA	NA	5.E-08	NA
1,2-Dichloroethane	5.14E-04	2.4	0.000026	1.9E-04	5.E-06	4.9E-04	2.E-04	5.E-06	2.E-04
1,1-Dichloroethene	4.49E-05	0.2	NA	NA	NA	4.3E-05	2.E-04	NA	2.E-04
Tetrachloroethene	2.32E-02	0.27	0.0000059	8.5E-03	5.E-05	2.2E-02	8.E-02	5.E-05	8.E-02
Trichloroethene	2.24E-04	NA	0.000002	8.3E-05	2.E-07	NA	NA	2.E-07	NA
Vinyl chloride	ND	0.1	0.0000044	ND	ND	ND	ND	ND	ND
trans-1,2-Dichloroethene	3.95E-05	0.06	NA	NA	NA	3.8E-05	6.E-04	NA	6.E-04
cis-1,2-Dichloroethene	1.07E-04	0.035	NA	NA	NA	1.0E-04	3.E-03	NA	3.E-03
1,1,1-Trichloroethane	4.65E-04	5	NA	NA	NA	4.5E-04	9.E-05	NA	9.E-05
Methylene chloride	1.88E-03	1	0.00000047	6.9E-04	3.E-07	1.8E-03	2.E-03	3.E-07	2.E-03
Carbon tetrachloride	4.33E-04	0.1	0.000006	1.6E-04	1.E-06	4.2E-04	4.E-03	1.E-06	4.E-03
Xylenes	3.31E-03	0.1	NA	NA	NA	3.2E-03	3.E-02	NA	3.E-02
Toluene	8.54E-03	5	NA	NA	NA	8.2E-03	2.E-03	NA	2.E-03
1,2-Dibromoethane	ND	0.009	0.0006	ND	ND	ND	ND	ND	ND
Benzene	9.43E-04	0.03	0.0000078	3.5E-04	3.E-06	9.0E-04	3.E-02	3.E-06	3.E-02
Bromoform	ND	NA	0.0000011	ND	ND	ND	ND	ND	ND
Ethylbenzene	9.12E-04	1	0.0000025	3.4E-04	8.E-07	8.7E-04	9.E-04	8.E-07	9.E-04
IsoPropylbenzene	ND	0.4	NA	ND	ND	ND	ND	ND	ND
trans-1,3-Dichloropropene	ND	0.02	0.000004	ND	ND	ND	ND	ND	ND
Naphthalene	3.48E-03	0.003	0.000034	1.3E-03	4.E-05	3.3E-03	1.E+00	4.E-05	1.E+00
1,3-Butadiene	5.75E-05	0.002	0.00003	2.1E-05	6.E-07	5.5E-05	3.E-02	6.E-07	3.E-02
Methyl tert-butyl ether	2.75E-04	3	0.00000026	1.0E-04	3.E-08	2.6E-04	9.E-05	3.E-08	9.E-05
1,1,2-Trichloroethane	ND	NA	0.000016	ND	ND	ND	ND	ND	ND
1,2,4-Trimethylbenzene	9.77E-04	0.007	NA	NA	NA	9.4E-04	1.E-01	NA	1.E-01
1,2-Dichloropropane	ND	0.004	0.00001	ND	ND	ND	ND	ND	ND
1,3-Dichlorobenzene	ND	0.2	NA	ND	ND	ND	ND	ND	ND
1,4-Dichlorobenzene	8.13E-03	0.8	0.000011	3.0E-03	3.E-05	7.8E-03	1.E-02	3.E-05	1.E-02
Bromodichloromethane	3.35E-05	NA	0.000037	1.2E-05	5.E-07	NA	NA	5.E-07	NA
Chlorobenzene	4.60E-05	0.05	NA	NA	NA	4.4E-05	9.E-04	NA	9.E-04
C5-C8 Aliphatic Hydrocarbons	5.16E-02	0.2	NA	NA	NA	4.9E-02	2.E-01	NA	2.E-01
C9-C12 Aliphatic Hydrocarbons	4.73E-02	0.2	NA	NA	NA	4.5E-02	2.E-01	NA	2.E-01
C9-C10 Aromatic Hydrocarbons	ND	0.05	NA	ND	ND	ND	ND	ND	ND
Total					1.E-04		2.E+00	1.E-04	2.E+00

NA - Not available
NC - Not calculated
ND - Not detected

ATTACHMENT (ON CD)

ELECTRONIC ANALYTICAL DATA TABLE

UNITED STATES ENVIRONMENTAL PROTECTION AGENCY
Region 1
5 Post Office Square, Suite 100
Boston, MA 02109-3912

August 10, 2010

Tim Cosgrave
Harvard Project Services
249 Ayer Road, Suite 206
Harvard, MA 01451-1132

Dear Mr. Cosgrave:

EPA has reviewed the "Indoor Air Quality and Vapor Intrusion Assessment Report of Results" (Report of Results), prepared by The Johnson Company, dated June 18, 2010, and prepared the following comments.

1) Sub-Slab Sample Point Removal. The report states on page 11 that, "Existing sub-slab sample points SV-01 through SV-15 will be removed to prevent tampering and damage; the points will be reinstalled using the methodology presented in the approved IAQA/VI SOW in advance of the next sampling round. However, the Report of Results does not describe how these sub-slab sample points will be removed and sealed. A subsequent August 4, 2010 email by you described the process, which should be incorporated in the Report of Results. The process was described as follows:

1. Erect temporary screen to prevent public access to area.
2. Position calibrated PID and portable shop vac with HEPA filter adjacent to point.
3. Remove surface plug from ¼" swagelok fitting and thread in a bolt.
4. Apply pry bar under bolt to remove sampling point.
5. Insert Permagum sealing compound inside ¼" drilled hole to seal penetration.
6. Remove remaining hydraulic cement to expose native concrete.
7. Seal hole with new hydraulic cement from Permagum seal to floor elevation.

2) Location of Highest PCE/TCA Soil Vapor Concentrations. The Report of Results state on page 25 that, "PCE concentrations were highest in samples from sub-slab locations SV-05, SV-06, SV-07, SV-10, and SV-13, all located in the eastern portion of former Building B where IUS maintained a 5000-gallon aboveground PCE tank between 1977 and 1982 (Figure 3)." Considering the inserted table below illustrating the highest sub-slab soil gas tetrachloroethene (PCE) and 1,1,1-trichloroethane (TCA) concentrations, EPA believes it is more accurate to describe the highest PCE concentrations as being observed in the <u>center and eastern portion of Building B where</u>

IUS maintained a 5000-gallon PCE tank between 1977 and 1982 and operated washing machines and a dry cleaning machine with gutter drain between 1967 and 1969 (Figure 3).

Sub-slab SV Sample	Max PCE (ug/m3)	Sub-slab SV Sample	Max TCA (ug/m3)
SV-06	420,000	SV-06	1,440
SV-10	214,000	SV-12	1,050
SV-05	203,000	SV-05	920
SV-13	196,000	SV-13	313
SV-07	169,000	SV-07	280

The Report of Results should identify the following:

- The highest PCE and TCA sub-slab soil gas concentrations was observed at SV-06 and the fourth highest PCE and TCA sub-slab soil gas concentrations was observed at SV-13, and these sub-slab soil gas locations are situated by the former "Washing and Drying Cleaning Machine Area 1967-1969".

- The third highest PCE and TCA sub-slab soil gas concentrations was observed at SV-05, and this sub-slab soil gas location is situated near an area labeled on Figure 7 as "Former Drain Trench?."

3) Relationship to Historical Soil Data. The Report of Results should take into account some of the historical data collected from underneath Building B, where the highest PCE concentrations were observed at shallow depths below the foundation at soil boring UC35 (8,900 ug/kg, interval 0.5'-2') and UC34 (4,400 ug/kg, interval 3'-4.5'). These data were included in EPA's May 14, 2009 draft comments and potential vapor intrusion risk evaluations (see EPA Table 11, May 14, 2009). The UC35 and UC34 soil borings were located near sub-slab soil gas samples SV-13 and SV-06, respectively, and near the washing machines/dry cleaning machine/gutter and 5,000-gallon PCE tank (Figure 3).

In addition, EPA disagrees with the following statement on pages 25-26 (as well as similar statement in executive summary on page v): "PCE concentrations in sub-slab vapor samples are consistent with concentrations that could be generated by volatilization of dissolved PCE from underlying groundwater, based on the magnitude of historic detections of PCE in shallow groundwater in sampling events in 1993 and 1994. For example, using a dimensionless Henry's law coefficient of 0.765 (TRRP, 2006), a PCE concentration in groundwater of approximately 550 micrograms per liter (μg/L) could generate a theoretical maximum equilibrium soil vapor concentration of 420,000 $\mu g/m^3$ PCE if groundwater was the only source of VOCs to soil vapor. Thus, elevated PCE concentrations in sub-slab vapor do not necessarily indicate the presence of a source in soil beneath the area of elevated sub-slab vapor concentrations; groundwater may continue to impact soil vapor to observed levels." EPA also disagrees with the UniFirst's statement on page 25, third paragraph, which states, "Sub-slab vapor data are consistent with the presence of impacted groundwater in soil and shallow bedrock beneath the on-

Property building". These statements should be removed or modified. While UniFirst's theoretical maximum calculations considers 1993-1994 groundwater data, the calculations do not consider soil boring data collected under Building B around the same time period and UC35 and UC34 boring results illustrating the highest PCE soil concentrations in the shallow portion of the boring underneath the foundation while PCE soil concentrations at greater depth were significantly lower. See above comment and table insert, and attached Table 11. These data document the PCE soil contamination under Building B, and the highest PCE soil concentrations under Building B were situated in the upper portion of the soil boring under the foundation. This PCE soil contamination may contribute to sub-slab soil gas concentrations. EPA believes it is more accurate to describe the sub-slab vapor data as follows: Sub-slab vapor data are consistent with the presence of impacted groundwater and soil beneath the on-Property building.

EPA also disagrees with the similar assertions on page 30, where it is stated: "PCE concentrations in sub-slab vapor samples are consistent with concentrations that could be generated by volatilization of dissolved PCE from underlying groundwater. Thus, elevated PCE concentrations in sub-slab vapor do not necessarily indicate the presence of a source in soil beneath the area of elevated sub-slab vapor concentrations." This statement should also be removed or modified consistent with comments provided above. EPA believes it is more accurate to describe the sub-slab vapor data as follows: Sub-slab vapor data are consistent with the presence of impacted groundwater and soil beneath the on-Property building.

4) Reduced Scope of Analysis. EPA disagrees with recommendation bullets 2 and 3 on page 31 requesting a reduction of analyses during the 2nd round of sampling. Removing compounds from the list of analytes is premature at this stage. The 2nd sampling round will target the winter time period when the ground is frozen and may represent the worse case condition for sub-slab soil gas and indoor air sampling and analytical results. EPA dose not agree with reducing the analyses because the 1st round of sampling may not represent the worse case condition. In addition, some of the results are above EPA's screening levels, and EPA would like to ensure comparability with the next round of monitoring and retain the ability to evaluate changes in concentrations over time/between rounds. For the 2nd round, EPA requests the parties continue to perform the analyses agreed upon in the approved work plan.

6) Recommendation in Bullet 4. EPA suggests that recommendation bullet 4 on page 31 be expanded to also consider the following: EPA's May 14, 2009 comments; historical and any additional soil data collected underneath Building B and on the property; and any historical operations which may contribute to the presence of contamination under and inside the building.

Please also find attached some additional comments regarding data validation. Based upon this letter and the comments, please make appropriate revisions to the report. EPA will consider placing a revised report on its EPA web page.

If you have any questions regarding this letter or attached comments, please contact me at 617.918.1323.

Sincerely,

Joseph F. LeMay, P.E.
Office of Site Remediation and Restoration

Bob Cianciarulo, EPA
Joe Coyne, MassDEP
Dave Sullivan, TRC
Diane Silverman, TRC
Liz Denly, TRC
Jamie Stapleton, TRC
Michael Moore, Johnson Company
Bettina Longino, Johnson Company
Clayton Smith, demaxmis

TABLE 11. SOIL DATA AND EXPOSURE POINT CONCENTRATION SUMMARY
UNIFIRST PROPERTY
WELLS G&H SUPERFUND SITE - OU-1

Soil Max Scenario

Analyte	Maximum Detection (ug/kg)
Tetrachloroethene	8900
trans-1,2-Dichloroethene	64
Trichloroethene	37

Samples include: UC32 (2-3.5), UC32 (5.5-6.8), UC33 (2-3.5), UC33 (5.5-7.5), UC33 (9-10.5), UC33 (10.5-11.25), UC34 (3-4.5), UC34 (9-11), UC35 (0.5-2), UC35 (2-3.5) (plus duplicate), UC35 (5.5-7), UC35 (8.5-9.35), UC36 (0.5-2), UC36 (3.5-5), UC36 (5-6.5), UC36 (6.5-7.7), TPH1A (0.5), TPH2A (4.6), TPH9A (4.8), TPH11A (5.5), TPL1A (2.1), TPL4A (2.1), and TPL5A (3.7)

Soil 95% UCL Scenario

Analyte	95% UCL (ug/kg)	EPC (ug/kg)
Tetrachloroethene	5378	5378
trans-1,2-Dichloroethene	114	64
Trichloroethene	114	37

Samples include: UC32 (2-3.5), UC32 (5.5-6.8), UC33 (2-3.5), UC33 (5.5-7.5), UC33 (9-10.5), UC33 (10.5-11.25), UC34 (3-4.5), UC34 (9-11), UC35 (0.5-2), UC35 (2-3.5) (plus duplicate), UC35 (5.5-7), UC35 (8.5-9.35), UC36 (0.5-2), UC36 (3.5-5), UC36 (5-6.5), UC36 (6.5-7.7), TPH1A (0.5), TPH2A (4.6), TPH9A (4.8), TPH11A (5.5), TPL1A (2.1), TPL4A (2.1), and TPL5A (3.7) .

	half non-detects (Bold are detects)		
	ug/kg		
	PCE	TCE	t-1,2-DCE
UC32 (2-3.5)	130	130	130
UC32 (5.5-6.8)	**50**	135	135
UC33 (2-3.5)	100	100	100
UC33 (5.5-7.5)	110	110	110
UC33 (9-10.5)	110	110	110
UC33 (10.5-11.25)	**110**	170	170
UC34 (3-4.5)	**4400**	115	115
UC34 (9-11)	115	115	115
UC35 (0.5-2)	**8900**	110	110
UC35 (2-3.5) (AV)	**1500**	110	110
UC35 (5.5-7)	**73**	115	115
UC35 (8.5-9.35)	**590**	110	110
UC36 (0.5-2)	**130**	115	115
UC36 (3.5-5)	**84**	100	100
UC36 (5-6.5)	**290**	100	100
UC36 (6.5-7.7)	**300**	90	90
TPH1A (0.5)	**270**	155	155
TPH2A (4.6)	**360**	85	85
TPH9A (4.8)	**3400**	**37**	**62**
TPH11A (5.5)	**2800**	85	**64**
TPL1A (2.1)	**50**	45.5	45.5
TPL4A (2.1)	**170**	65	65
TPL5A (3.7)	55	55	55

EPA Validation Comments on IAQ/VIA Reports of Results, dated June 18, 2010

1. Page 24, Section 5.3, Sub-Slab Sampling Results, Detected Petroleum Hydrocarbon Constituents: The text states that the low detections of aliphatic hydrocarbons detected at SV-02 and SV-04 are unlikely to be indicative of sub-slab petroleum material in these areas. However, the concentrations detected are above the USEPA-proposed screening levels. The statement should be qualified. It is suggested that it may be more appropriate to state, "These low detections are unlikely to be indicative of significant sub-slab petroleum material in these areas".

2. Appendix B Field Activities Quality Assurance Review: Form JCO-QAU-005b: This form documents the issues with the high canister vacuum at SV-02. This sample was recollected and the recollection also resulted in a high canister vacuum. According to the form provided, it was determined that the problem was with the soil vapor point itself. Please explain how this will be rectified for future sampling events and provide a discussion in this section as well as Section 5.1 of the report on the potential effect of this issue on the representativeness of this soil vapor sample.

3. Appendix D, Laboratory Analytical Data Validation Report, Section X, Sensitivity Check: According to this section, the laboratory evaluated results for naphthalene, 1,2-dibromoethane, and bromodichloromethane down to one-half the reporting limit and reported estimated values below the reporting limit, if present. This was in accordance with Form K in the EPA-approved QAPP (March 2010) since the reporting limits exceeded the USEPA-proposed screening levels. However, Form K in the QAPP also required the laboratory to evaluate the results for C_9-C_{12} aliphatics down to one-half the reporting limit as well for the same reason. There is no indication in the validation report or in the laboratory report that this was performed. Please clarify and, if not performed, the laboratory must revise the report to accommodate this requirement.

The Johnson Company ENVIRONMENTAL SCIENCE AND ENGINEERING SOLUTIONS

ph (802) 229-4600
fax (802) 229-5876
100 State Street, Suite 600
Montpelier, VT 05602
www.johnsonco.com

September 17, 2010

Joseph F. LeMay, P.E.
Office of Site Remediation and Restoration
USEPA Region 1
5 Post Office Square, Suite 100
Boston, MA 02109-3912

Re: Response to USEPA August 10, 2010 review comments regarding UniFirst's June 2010 Indoor Air Quality and Vapor Intrusion Assessment (IAQA/VI) Report of Results

Dear Mr. LeMay:

This letter and its attachment are provided on behalf of UniFirst Corporation (UniFirst) in response to comments provided by the United States Environmental Protection Agency Region 1 (USEPA) in a letter dated August 10, 2010 (Comment Letter) regarding the *Indoor Air Quality and Vapor Intrusion Assessment Report of Results* (June 2010 Report of Results) for the UniFirst Source Area Property (the Property; 15 Olympia Avenue, Woburn, MA). The June 2010 Report of Results summarized work performed and data collected during the April 2010 IAQA/VI sampling event at the Property, including two pre-sampling building inspections, sampling of indoor air and sub-slab vapor at 15 locations in the on-Property building, and sampling of ambient outdoor air at three on-Property locations.

The April 2010 sampling event was the first of two IAQA/VI sampling events to be conducted as part of the IAQA/VI Scope of Work (SOW)[1] approved by USEPA in a letter dated March 29, 2010. The June 2010 Report of Results presents initial results for the IAQA/VI assessment. A second round of IAQA/VI sampling will be conducted during the winter heating season, in either January or February 2011. The final conclusions of the IAQA/VI assessment will be based on the results from both rounds of IAQA/VI sampling and the results of groundwater sampling of on-Property water table wells conducted as part of the VIA Work Plan[2]. Comments made in the Comment Letter that relate to the text discussion presented in the June 2010 Report of Results will be addressed in the final IAQA/VI Assessment Report, to be submitted to USEPA following collection, validation, and review of the sampling data from the second and final IAQA/VI sampling event. Interim responses to USEPA comments are provided below.

RESPONSES TO COMMENTS

1) Sub-Slab Sample Point Removal. The Report states on page 11 that, "Existing sub-slab sample points SV-01 through SV-15 will be removed to prevent tampering and damage; the points will be reinstalled using the methodology presented in the approved IAQA/VI SOW in advance of the next sampling round." However, the Report of Results does not describe how these sub-slab sample points will be removed and sealed. A subsequent August 4, 2010 email by you described the process, which should be incorporated in the Report of Results. The process was described as follows:

[1] The Johnson Company, 2010. Indoor Air Quality and Vapor Intrusion Scope of Work, Revision 2, UniFirst Property, Wells G&H Superfund Property, March 25.
[2] GeoTrans, 2010. Vapor Intrusion Assessment Work Plan, Revision 1, and Quality Assurance Project Plan for Vapor Intrusion Assessment, Wells G&H Superfund Site, Woburn Massachusetts, March 25.

1. Erect temporary screen to prevent public access to area.
2. Position calibrated PID and portable shop vac with HEPA filter adjacent to point.
3. Remove surface plug from ¼" swagelok fitting and thread in a bolt.
4. Apply pry bar under bolt to remove sampling point.
5. Insert Permagum sealing compound inside ¼" drilled hole to seal penetration.
6. Remove remaining hydraulic cement to expose native concrete.
7. Seal hole with new hydraulic cement from Permagum seal to floor elevation.

RESPONSE:
Sub-slab sample points SV-01 through SV-15 were removed on August 16, 2010 to prevent damage as a result of ongoing operations on the Property by the current tenant and its customers. All sample points and plugs were intact prior to removal of the points. Points were removed and sealed following the process described above, as approved by USEPA in an August 5, 2010 email. Field logs describing the work and noting PID readings recorded at each location are provided in Attachment A. The points will be reinstalled using the methodology presented in the approved IAQA/VI SOW in advance of the next sampling round. A description of the sub-slab sample removal and reinstallation process will be included in the final Report of Results.

2) Location of Highest Soil Vapor Concentrations. The Report of Results state on page 25 that, "PCE concentrations were highest in samples from sub-slab locations SV-05, SV-06, SV-07, SV-10, and SV-13, all located in the eastern portion of former Building B where IUS maintained a 5000-gallon above ground PCE tank between 1977 and 1982 (Figure 3)." Considering the inserted table below illustrating the highest sub-slab soil gas tetrachloroethene (PCE) and 1,1,1-trichloroethane (TCA) concentrations, EPA believes it is more accurate to describe the highest PCE concentrations as being observed in the center and eastern portion of Building B where IUS maintained a 5000-gallon PCE tank between 1977 and 1982 and operated washing machines and a dry cleaning machine with gutter drain between 1967 and 1969 (Figure 3).

Sub Slab SV Sample	Max PCE (µg/m3)	Sub-slab SV Sample	Max TCA (µg/m3)
SV-06	420,000	SV-06	1,440
SV-10	214,000	SV-12	1,050
SV-05	203,000	SV-05	920
SV-13	196,000	SV-13	313
SV-07	169,000	SV-07	280

The Report of Results should identify the following:

- The highest PCE and TCA sub-slab soil gas concentrations was observed at SV-06 and the fourth highest PCE and TCA sub-slab soil gas concentrations was observed at SV-13, and these sub-slab soil gas locations are situated by the former "Washing and Drying Cleaning Machine Area 1967-1969".

- The third highest PCE and TCA sub-slab soil gas concentrations was observed at SV-05, and this sub-slab soil gas location is situated near an area labeled on Figure 7 as "Former Drain Trench?"

RESPONSE:
The final Report of Results will present a discussion of sub-slab vapor concentrations based on the results of both rounds of IAQA/VI sampling and the results of groundwater sampling of on-Property water table wells conducted as part of the VIA Work Plan. Discussion of the final assessment results will include reference to historical operations areas, previously-collected subsurface contaminant results, and recently-collected groundwater data, as appropriate.

3) Relationship to Historical Soil Data. The Report of Results should take into account some of the historical data collected from underneath Building B, where the highest PCE concentrations were observed at shallow depths below the foundation at boring UC35 (8,900 μg/kg, interval 0.5'-2') and UC34 (4,400 μg/kg, 3'-4.5'). These data were included in EPA's May 14, 2009 draft comments and potential vapor risk evaluations (see EPA Table 11, May 14, 2009). The UC35 and UC34 soil borings were located near sub-slab soil gas samples SV-13 and SV-06, respectively, and near the washing machines/dry cleaning machine/gutter and 5,000-gallon PCE tank (Figure 3).

In addition, EPA disagrees with the following statement on pages 25-26 (as well as similar statement in executive summary on page v): "PCE concentrations in sub-slab vapor samples are consistent with concentrations that could be generated by volatilization of dissolved PCE from underlying groundwater, based on the magnitude of historic detections of PCE in shallow groundwater in sampling events in 1993 and 1994. For example, using a dimensionless Henry's law coefficient of 0.765 (TRRP, 2006), a PCE concentration in groundwater of approximately 550 micrograms per liter (μg/l) could generate a theoretical maximum equilibrium soil vapor concentration of 420,000 $\mu g/m^3$ PCE if groundwater was the only source of VOCs to soil vapor. Thus, elevated PCE concentrations in sub-slab vapor do not necessarily indicate the presence of a source in soil beneath the area of elevated sub-slab vapor concentrations; groundwater may continue to impact soil vapor to observed levels." EPA also disagrees with the UniFirst's statement on page 25, third paragraph, which states, "Sub-slab vapor data are consistent with the presence of impacted groundwater in soil and shallow bedrock beneath the on-Property building". These statements should be removed or modified. While UniFirst's theoretical maximum calculations considers 1993-1994 groundwater data, the calculations do not consider soil boring data collected under Building B around the same time period and UC35 and UC34 boring results illustrating the highest PCE soil concentrations in the shallow portion of the boring underneath the foundation while PCE soil concentrations at greater depth were significantly lower. See above comment and table insert, and attached Table 11. These data document the PCE soil contamination under Building B, and the highest PCE soil concentrations under Building B were situated in the upper portion of the soil boring under the foundation. This PCE soil contamination may contribute to sub-slab soil gas concentrations. EPA believes it is more accurate to describe the sub-slab vapor data as follows: <u>Sub-slab vapor data are consistent with the presence of impacted groundwater and soil beneath the on-Property building.</u>

EPA also disagrees with the similar assertions on page 30, where it is stated: "PCE concentrations in sub-slab vapor samples are consistent with concentrations that could be generated by volatilization of

dissolved PCE from underlying groundwater. Thus, elevated PCE concentrations in sub-slab vapor do not necessarily indicate the presence of a source in soil beneath the area of elevated sub-slab vapor concentrations." This statement should also be removed or modified consistent with comments provided above. EPA believes it is more accurate to describe the sub-slab vapor data as follows: Sub-slab vapor data are consistent with the presence of impacted groundwater and soil beneath the on-Property building.

RESPONSE:
See Comment 2 response.

4) Reduced Scope of Analysis. EPA disagrees with recommendation bullets 2 and 3 on page 31 requesting a reduction of analyses during the 2nd round of sampling. Removing compounds from the list of analytes is premature at this stage. The 2nd sampling round will target the winter time period when the ground is frozen and may represent the worse case condition for sub-slab soil gas and indoor air sampling and analytical results. EPA dose not agree with reducing the analyses because the 1st round of sampling may not represent the worse case condition. In addition, some of the results are above EPA's screening levels, and EPA would like to ensure comparability with the next round of monitoring and retain the ability to evaluate changes in concentrations over time/between rounds. For the 2nd round, EPA requests the parties continue to perform the analyses agreed upon in the approved work plan.

RESPONSE:
The second round IAQA/VI samples will be analyzed for the full list of analytes from Table 1 of the approved SOW using the analytical method specified in the table.

Note: No Comment 5 was included in the Comment Letter.

6) Recommendation in Bullet 4. EPA suggests that recommendation bullet 4 on page 31 be expanded to also consider the following: EPA's May 14, 2009 comments; historical and any additional soil data collected underneath Building B and on the property; and any historical operations which may contribute to the presence of contamination under and inside the building.

RESPONSE:
The final Report of Results will present final recommendations, including measures that may be appropriate to address volatile organic compounds detected in sub-slab vapor under the building, based on the results of both rounds of IAQA/VI sampling and the results of groundwater sampling of on-Property water table wells conducted as part of the VIA Work Plan. Discussion of the final assessment results will include reference to historical operations areas, previously-collected subsurface contaminant results, and recently-collected groundwater data, as appropriate.

EPA Validation Comment 1 - Page 24, Section 5.3, Sub-Slab Sampling Results, Detected Petroleum Hydrocarbon Constituents: The text states that the low detections of aliphatic hydrocarbons detected at SV-02 and SV-04 are unlikely to be indicative of sub-slab petroleum material in these areas. However, the concentrations detected are above the USEPA-proposed screening levels. The statement should be

qualified. It is suggested that it may be more appropriate to state, "These low detections are unlikely to be indicative of significant sub-slab petroleum material in these areas".

RESPONSE: The final Report of Results will present a discussion of sub-slab vapor concentrations based on the results of both rounds of IAQA/VI sampling and the results of groundwater sampling of on-Property water table wells conducted as part of the VIA Work Plan. This specific comment will be taken into consideration in the Final Report of Results.

EPA Validation Comment 2 - Appendix B Field Activities Quality Assurance Review: Form JCO-QAU-005b: This form documents the issues with the high canister vacuum at SV-02. This sample was recollected and the recollection also resulted in a high canister vacuum. According to the form provided, it was determined that the problem was with the soil vapor point itself. Please explain how this will be rectified for future sampling events and provide a discussion in this section as well as Section 5.1 of the report on the potential effect of this issue on the representativeness of this soil vapor sample.

RESPONSE: As explained on Page 17 of the June 2010 Report of Results, at location SV-02 the sample canister flow controller vacuum reading remained at -20 in Hg after over one hour of sample collection time. Because this was the second sample collection attempt at this location and the facility was opening for business, the sample canister was closed at a vacuum higher (-21.7 in Hg) than the target -10 in Hg and sent to the laboratory for analysis. No other field or laboratory data validation issues were identified for this sub-slab vapor sample. The elevated vacuum resulted in a slight dilution of the sample but the result was considered valid. The SV-02 sampling location passed leak testing prior to sampling and the sample was considered representative and useable. Because data from this sample location were not qualified, discussion of this sample in Section 5.1 of the June 2010 Report of Results was not warranted.

Two actions will be implemented during the second round of IAQA/VI sampling to reach the -10 in Hg target final canister vacuum at this location. First, a new sample point will be installed at this location adjacent to the April 2010 sampling point. Reinstallation of the sampling point is intended to eliminate issues related to the former sub-slab vapor point that may have contributed to the elevated canister vacuum at this location in April 2010, if any. Second, sample collection at this point will commence immediately after completion of the indoor air sample collection event so that the sample collection time can be extended past one hour if additional time is necessary to reach a target final canister vacuum of -10 in Hg at this location. A longer available sample collection time is intended to address issues related to low transmissivity sub-slab material that may have contributed to the elevated canister vacuum at this location in April 2010, if any.

EPA Validation Comment 3 - Appendix D, Laboratory Analytical Data Validation Report, Section X, Sensitivity Check: According to this section, the laboratory evaluated results for naphthalene, 1,2-dibromoethane, and bromodichloromethane down to one-half the reporting limit and reported estimated values below the reporting limit, if present. This was in accordance with Form K in the EPA-approved QAPP (March 2010) since the reporting limits exceeded the USEPA-proposed screening levels. However, Form K in the QAPP also required the laboratory to evaluate the results for C_9-C_{12} aliphatics down to one-half the reporting limit as well for the same reason. There is no indication in the validation report or in the laboratory report that this was performed. Please clarify and, if not performed, the laboratory must revise the report to accommodate this requirement.

RESPONSE: The footnote in Form K of the USEPA-approved QAPP states that results for the following four analytes will be estimated to one-half the reporting limit where possible:

- *1,2-dibromoethane*
- *naphthalene*
- *bromodichloromethane*
- *C_9-C_{12} aliphatic compounds*

Reporting of results to one-half the reporting limit was possible for the three analtyes analyzed using Modified EPA Method TO-15 with Selective Ion Monitoring (SIM): 1,2-dibromoethene, naphthalene, and bromodichloromethane. As noted in the comment above, reporting of results to one-half the reporting limit was performed by the laboratory for these three analytes. Reporting of results to one-half the reporting limit was not possible for C_9-C_{12} aliphatic compounds analyzed by the Massachusetts Air-Phase Petroleum Hydrocarbons (MA APH) Method because the Massachusetts APH method does not include the performance of a method detection limit study, and there is no documentation in the data packages that would support quantification below the low standard of the initial calibration. Thus, it was the opinion of the laboratory and the data validator that reporting results below the low standard of the initial calibration was not appropriate for this analyte. On that basis, the laboratory report was considered acceptable and in compliance with the QAPP statement that estimation to one-half the reporting limit would be performed where possible. All raw data were examined during the laboratory data validation and it was noted that raw results above one-half the reporting limit for C_9-C_{12} aliphatic compounds were only detected in the raw data for two samples (L1005229-06 at 9.72 $\mu g/m^3$ and L1005229-15 at 8.89 $\mu g/m^3$) and that these results were only slightly above one-half the reporting limit. The data validator deemed that reporting these results as non-detects at the quantitation limit was appropriate.

Sincerely yours,
THE JOHNSON COMPANY, INC.

By: Michael B. Moore for B. Longino
Bettina L. Longino, Ph.D.
Senior Engineer

By: Michael B. Moore
Michael B. Moore, P.G.
Vice President/Sr. Managing Hydrogeologist

Attachment 1: Sub-Slab Sample Point Destruction Field Logs

cc: David Sullivan, TRC Solutions (electronic copy)
Joe Coyne, MassDEP (electronic copy)
Cindy Lewis, EPA (electronic copy)
William Graham, UniFirst Corporation
Jack Badey, UniFirst Corporation
Tim Cosgrave, Harvard Project Services LLC

ATTACHMENT 1

SUB-SLAB SAMPLE POINT DESTRUCTION FIELD LOGS

Unifirst Woburn MA

1-2114-2 8/16/10

Pick up supplies @ Lowes.
Pick up ppb Rae @ Pine Env.

On site 0855
weather, Partly Cloudy Warm (80's) slight breeze.
Set up equipment + Calibrate PID.
Set up curtain @ SV-02 location to start removing vapor points. See field sheets for removal process.

Off Site 14:55

Soil Gas Well Construction Log

The Johnson Company, Inc.
100 State Street, Suite 600
Montpelier, VT 05602
Tel. (802) 229-4600

pg.

Project Name: Unifirst
Project Number: 1-2114-2
Site Location: Woburn, MA

Well ID: SV-01 **Field Personnel:** TRO **Recorded by:** TRO

Permit Number: _____ **Installation Date:** Removed 8/16/10 **Driller:** _____

Drilling Method: _____ **Drilling Fluid:** _____ **Fluid Loss During Drilling:** _____

Ambient PID Reading: 0.0 ppb Before Removal **Borehole PID Reading:** 0.0 ppb

Well Construction Details: (all measurements relative to ground surface)

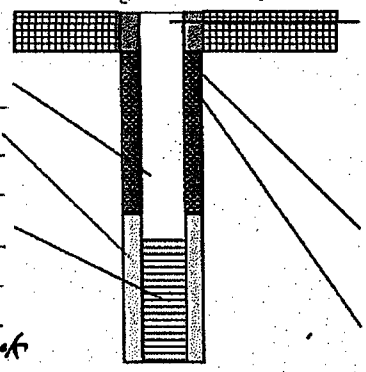

Riser Pipe Material: _____

Sandpack Material: _____
Top: _____ Bottom: _____

Screen Material: _____
Top: _____ Bottom: _____
Length: _____ Diameter: _____
Found original Plug Intact

Protective Casing
Material: _____
Slab Thickness: _____
Material Under Slab: _____
Road Box Seal: _____

Annular Seal Material: Hydraulic Cement
Top: 0.0 Bottom: 0.15

Secondary Seal Material: Permagum
Top: 0.15 Bottom: 0.19

Notes: Insert Bolt into 1/4" sweg fitting. Pry up with flat bar. Remove hydraulic cement. Insert permagum into 1/4" hole, pack in additional permagum on top.

~~**Integrity Testing:**~~
Date Completed: _____ Injection Pressure: _____
Tracer Type: _____ Tracer Grade: _____
Tracer Gas Detection Meter:
Model: _____
Serial: _____

Time	Sampling Rate	Concentration

~~**Purging Details:**~~ Date: _____ Personnel: _____ Pump/Equipment: _____
Purging Rate: _____ Start Time: _____ End Time: _____
~~See Ambient Air and Soil Vapor Sampling Form for sample collection details.~~

Notes: Fill remaining void w/ hydraulic cement to concrete surface.

F:\STANDARD\JCO Forms\SoilGasWell.pub

COPYRIGHT© 2010 THE JOHNSON COMPANY, INC. DO NOT REPRODUCE OR DISTRIBUTE

Soil Gas Well Construction Log

The Johnson Company, Inc.
100 State Street, Suite 600
Montpelier, VT 05602
Tel. (802) 229-4600

pg.

Project Name: Umfirst
Project Number: 1-2114-2
Site Location: Woburn, MA

Well ID: SV-02 **Field Personnel:** TRW **Recorded by:** TRW

Permit Number: _____ **Installation Date:** Removed Point 8/16/10 **Driller:** _____

Drilling Method: _____ **Drilling Fluid:** _____ **Fluid Loss During Drilling:** _____

Ambient PID Reading: 0.0 ppb **Borehole PID Reading:** 0.0 ppb

Well Construction Details: (all measurements relative to ground surface)

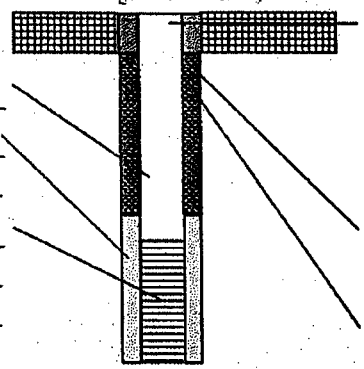

Riser Pipe Material: _____

Sandpack Material: _____
Top: _____ Bottom: _____

Screen Material: _____
Top: _____ Bottom: _____
Length: _____ Diameter: _____
original plug Intact

Protective Casing
Material: _____
Slab Thickness: _____
Material Under Slab: _____
Road Box Seal: _____

Annular Seal Material: Hydraulic Cement
Top: 0.0 Bottom: 0.12

Secondary Seal Material: Permagum
Top: 0.12 Bottom: 0.15

Notes: Insert Bolt into 1/4" swag fitting. Pry up w/flat bar. Remove swag fitting Remove hydraulic Cement from drill hole Insert permagum into 1/4" hole, pack

~~**Integrity Testing:**~~
Date Completed: _____ Injection Pressure: _____
Tracer Type: _____ Tracer Grade: _____
Tracer Gas Detection Meter:
Model: _____
Serial: _____

Time	Sampling Rate	Concentration

~~**Purging Details:**~~ Date: _____ Personnel: _____ Pump/Equipment: _____
Purging Rate: _____ Start Time: _____ End Time: _____
~~*See Ambient Air and Soil Vapor Sampling Form for sample collection details.*~~

Notes: additional permagum on top. Fill remaining hole w/ hydraulic cement to concrete surface.

F:\STANDARD\JCO Forms\SoilGasWell.pub

COPYRIGHT© 2010 THE JOHNSON COMPANY, INC. DO NOT REPRODUCE OR DISTRIBUTE

Soil Gas Well Construction Log

The Johnson Company, Inc.
100 State Street, Suite 600
Montpelier, VT 05602
Tel. (802) 229-4600

pg.

Project Name: Unifirst
Project Number: 1-2114-2
Site Location: Woburn, MA

Well ID: SV-03 **Field Personnel:** TRO **Recorded by:** TRO

Permit Number: _____ ~~Installation~~ Removed Point Date: 8/16/10 **Driller:** _____

Drilling Method: _____ **Drilling Fluid:** _____ **Fluid Loss During Drilling:** _____

Ambient PID Reading: 0.0 ppb **Borehole PID Reading:** 0.0 ppb

Well Construction Details: (all measurements relative to ground surface)

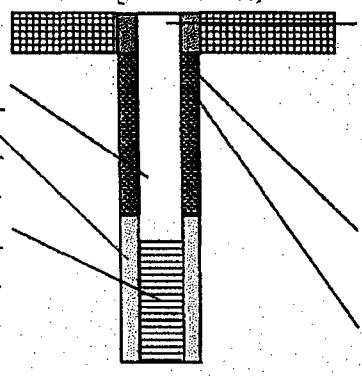

Riser Pipe Material: _____

Sandpack Material: _____
Top: _____ Bottom: _____

Screen Material: _____
Top: _____ Bottom: _____
Length: _____ Diameter: _____

Protective Casing
Material: _____
Slab Thickness: _____
Material Under Slab: _____
Road Box Seal: _____

Annular Seal Material: Hydraulic Cement
Top: 0.0 Bottom: 0.14'

Secondary Seal Material: Permagum
Top: 0.14' Bottom: 0.18'

Notes: Original Plug Intact.

~~**Integrity Testing:**~~
Date Completed: _____ Injection Pressure: _____
Tracer Type: _____ Tracer Grade: _____
Tracer Gas Detection Meter:
Model: _____
~~Serial:~~ _____

Time	Sampling Rate	Concentration

~~**Purging Details:**~~ Date: _____ Personnel: _____ ~~Pump Equipment:~~ _____
Purging Rate: _____ Start Time: _____ End Time: _____

~~*See Ambient Air and Soil Vapor Sampling Form for sample collection details.*~~

Notes: Insert Bolt into 1/4 swag fitting. Pry up w/flat bar. Remove swag fitting. Remove old hydraulic cement from drilled hole. Insert permagum into 1/4" hole, pack additional permagum on top. Fill remaing hole w/hydraulic cement smooth to concrete surface.

F:\STANDARD\JCO Forms\SoilGasWell.pub

COPYRIGHT© 2010 THE JOHNSON COMPANY, INC. DO NOT REPRODUCE OR DISTRIBUTE

Soil Gas Well Construction Log

The Johnson Company, Inc.
100 State Street, Suite 600
Montpelier, VT 05602
Tel. (802) 229-4600

pg.

Project Name: Unifirst
Project Number: 1-2114-2
Site Location: Woburn, MA

Well ID: SV-04 **Field Personnel:** TRO **Recorded by:** TRO

Permit Number: _____ ~~Installation~~ Removed Point Date: 8/16/10 **Driller:** _____

Drilling Method: _____ **Drilling Fluid:** _____ **Fluid Loss During Drilling:** _____

Ambient PID Reading: 0.0 ppb **Borehole PID Reading:** 0.0 ppb

Well Construction Details: (all measurements relative to ground surface)

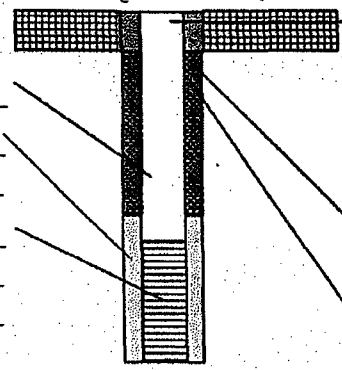

Riser Pipe Material: _____

Sandpack Material: _____
Top: _____ Bottom: _____

Screen Material: _____
Top: _____ Bottom: _____
Length: _____ Diameter: _____

Protective Casing
Material: _____
Slab Thickness: _____
Material Under Slab: _____
Road Box Seal: _____

Annular Seal Material: Hydraulic Cement
Top: 0.0 Bottom: 0.15

Secondary Seal Material: Permagum
Top: 0.15' Bottom: ~0.19'

Notes: Original Plug Intact.

~~**Integrity Testing:**~~
Date Completed: _____ Injection Pressure: _____
Tracer Type: _____ Tracer Grade: _____
Tracer Gas Detection Meter:
Model: _____
~~Serial:~~ _____

Time	Sampling Rate	Concentration

~~**Purging Details:**~~ Date: _____ Personnel: _____ Pump/Equipment: _____
Purging Rate: _____ ~~Start Time:~~ _____ End Time: _____
~~*See Ambient Air and Soil Vapor Sampling Form for sample collection details.*~~

Notes: Insert Bolt into 1/4" swag fitting. Pry up bolt w/flat bar. Remove swag fitting. Plug 1/4" hole w/permagum. Remove old hydraulic cement from drilled hole. Insert additional permagum and pack into bottom of hole. Fill remaining hole w/hydraulic cement + smooth to concrete surface.

F:\STANDARDUCO Forms\SoilGasWell.pub

COPYRIGHT© 2010 THE JOHNSON COMPANY, INC. DO NOT REPRODUCE OR DISTRIBUTE

Soil Gas Well Construction Log

The Johnson Company, Inc.
100 State Street, Suite 600
Montpelier, VT 05602
Tel. (802) 229-4600

pg.

Project Name: Unifirst
Project Number: 1-2114-2
Site Location: Woburn, MA

Well ID: SV-05 **Field Personnel:** TRO **Recorded by:** TRO

Permit Number: _____ Installation Date: Remove Pnt. 8/16/10 Driller: _____

Drilling Method: _____ Drilling Fluid: _____ Fluid Loss During Drilling: _____

Ambient PID Reading: 0.0 ppb Borehole PID Reading: 0.0 ppb

Well Construction Details: (all measurements relative to ground surface)

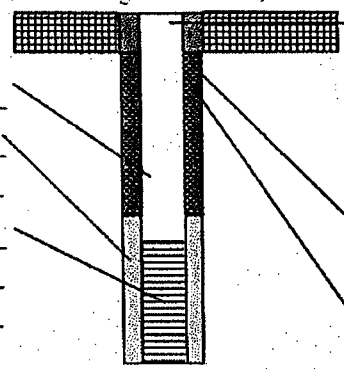

Riser Pipe Material: _____

Sandpack Material: _____
Top: _____ Bottom: _____

Screen Material: _____
Top: _____ Bottom: _____
Length: _____ Diameter: _____

Protective Casing
Material: _____
Slab Thickness: _____
Material Under Slab: _____
Road Box Seal: _____

Annular Seal Material: Hydraulic Cement
Top: 0.0 Bottom: 0.15'

Secondary Seal Material: Permagum
Top: 0.15' Bottom: 0.18'

Notes: original Plug found Intact

~~**Integrity Testing:**~~
Date Completed: _____ Injection Pressure: _____
Tracer Type: _____ Tracer Grade: _____
Tracer Gas Detection Meter:
Model: _____
~~Serial:~~ _____

Time	Sampling Rate	~~Concentration~~

~~**Purging Details:**~~ Date: _____ Personnel: _____ ~~Pump/Equipment:~~ _____
Purging Rate: _____ Start Time: _____ End Time: _____
~~*See Ambient Air and Soil Vapor Sampling Form for sample collection details.*~~

Notes: Insert bolt into 1/4" Swag fitting. Pry up bolt w/flat bar. Remove swag fitting & plug bottom of hole w/permagum. Remove old hydraulic cement from drilled hole. Insert additional permagum & pack into bottom of hole. Fill remaining open hole w/hydraulic cement & smooth to concrete surface.

F:\STANDARD\JCO Forms\SoilGasWell.pub

COPYRIGHT© 2010 THE JOHNSON COMPANY, INC. DO NOT REPRODUCE OR DISTRIBUTE

Soil Gas Well Construction Log

The Johnson Company, Inc.
100 State Street, Suite 600
Montpelier, VT 05602
Tel. (802) 229-4600

pg.

Project Name: Unifirst
Project Number: 1-2114-2
Site Location: Woburn MA

Well ID: SV-06 **Field Personnel:** TRO **Recorded by:** TRO

Permit Number: _____ Installation Date: Remove Pnt. 8/16/10 Driller: _____

Drilling Method: _____ Drilling Fluid: _____ Fluid Loss During Drilling: _____

Ambient PID Reading: 0.0 ppb Borehole PID Reading: 0.0 ppb

Well Construction Details: (all measurements relative to ground surface)

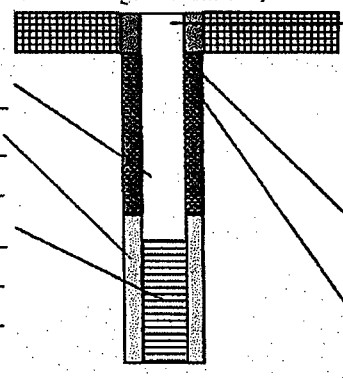

Riser Pipe Material: _____

Sandpack Material: _____
Top: _____ Bottom: _____

Screen Material: _____
Top: _____ Bottom: _____
Length: _____ Diameter: _____

Protective Casing
Material: _____
Slab Thickness: _____
Material Under Slab: _____
Road Box Seal: _____

Annular Seal Material: Hydraulic Cement
Top: 0.0 Bottom: 0.13'

Secondary Seal Material: Permagum
Top: 0.13' Bottom: 0.17'

Notes: Original Plug Intact.

~~**Integrity Testing:**~~
Date Completed: _____ Injection Pressure: _____
Tracer Type: _____ Tracer Grade: _____
Tracer Gas Detection Meter:
Model: _____
~~Serial:~~ _____

Time	Sampling Rate	Concentration

~~**Purging Details:**~~ Date: _____ Personnel: _____ ~~Pump/Equipment:~~ _____
Purging Rate: _____ Start Time: _____ End Time: _____
~~*See Ambient Air and Soil Vapor Sampling Form for sample collection details.*~~

Notes: Insert bolt into ¼" swag fitting. Pry up bolt w/ flat bar. Remove swag fitting & plug bottom of hole w/ permagum. Remove old hydraulic cement from drilled hole. Insert additional permagum & pack into bottom of hole. Fill remaining open hole w/ hydraulic cement & smooth to concrete surface.

F:\STANDARD\JCO Forms\SoilGasWell.pub

COPYRIGHT© 2010 THE JOHNSON COMPANY, INC. DO NOT REPRODUCE OR DISTRIBUTE

Soil Gas Well Construction Log

The Johnson Company, Inc.
100 State Street, Suite 600
Montpelier, VT 05602
Tel. (802) 229-4600

pg.

Project Name: Unifirst
Project Number: 1-2114-2
Site Location: Woburn MA

Well ID: SV-07 **Field Personnel:** TRO **Recorded by:** TRO

Permit Number: _____ **Installation Date:** Removed Pnt. 8/16/10 **Driller:** _____

Drilling Method: _____ **Drilling Fluid:** _____ **Fluid Loss During Drilling:** _____

Ambient PID Reading: 0.0 ppb **Borehole PID Reading:** 0.0 ppb

Well Construction Details: (all measurements relative to ground surface)

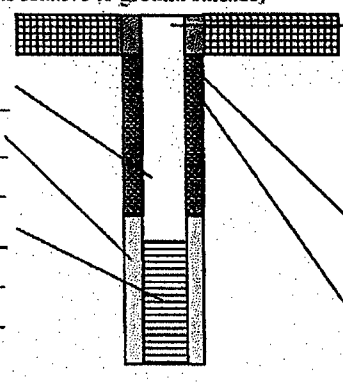

Riser Pipe Material: _____

Sandpack Material: _____
Top: _____ Bottom: _____

Screen Material: _____
Top: _____ Bottom: _____
Length: _____ Diameter: _____

Protective Casing
Material: _____
Slab Thickness: _____
Material Under Slab: _____
Road Box Seal: _____

Annular Seal Material: Hydraulic Cement
Top: 0.0 Bottom: 0.14'

Secondary Seal Material: Permagum
Top: 0.14' Bottom: 0.18'

Notes: Original plug Intact.

~~**Integrity Testing:**~~
Date Completed: _____ Injection Pressure: _____
Tracer Type: _____ Tracer Grade: _____
Tracer Gas Detection Meter:
Model: _____
~~Serial:~~ _____

Time	Sampling Rate	Concentration

~~**Purging Details:**~~ Date: _____ Personnel: _____ ~~Pump/Equipment:~~ _____
Purging Rate: _____ Start Time: _____ End Time: _____

~~*See Ambient Air and Soil Vapor Sampling Form for sample collection details.*~~

Notes: Insert bolt into 1/4" swag fitting. Pry up bolt w/ flat Bar. Remove swag fitting + plug bottom of hole w/permagum. Remove old hydraulic cement from drilled hole. Insert additional permagum + pack into bottom of hole. Fill remaining open hole w/hydraulic cement + smooth to concrete surface.

F:\STANDARD\JCO Forms\SoilGasWell.pub

COPYRIGHT© 2010 THE JOHNSON COMPANY, INC. DO NOT REPRODUCE OR DISTRIBUTE

Soil Gas Well Construction Log

The Johnson Company, Inc.
100 State Street, Suite 600
Montpelier, VT 05602
Tel. (802) 229-4600

pg.

Project Name: Unifirst
Project Number: 1-2114-2
Site Location: Woburn MA

Well ID: SV-08 **Field Personnel:** TRO **Recorded by:** TRO

Permit Number: _____ **Installation Date:** Remove Pnt. 8/16/10 **Driller:** _____

Drilling Method: _____ **Drilling Fluid:** _____ **Fluid Loss During Drilling:** _____

Ambient PID Reading: 0.0 ppb **Borehole PID Reading:** 0.0 ppb

Well Construction Details: (all measurements relative to ground surface)

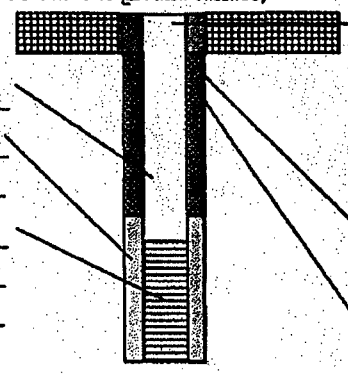

Riser Pipe Material: _____

Sandpack Material: _____
Top: _____ Bottom: _____

Screen Material: _____
Top: _____ Bottom: _____
Length: _____ Diameter: _____

Protective Casing
Material: _____
Slab Thickness: _____
Material Under Slab: _____
Road Box Seal: _____

Annular Seal Material: Hydraulic Cement
Top: 0.0 Bottom: 0.15'

Secondary Seal Material: Permagum
Top: 0.15 Bottom: 0.12'

Notes: Original Plug found Intact, under carpet.

~~**Integrity Testing:**~~
Date Completed: _____ Injection Pressure: _____
Tracer Type: _____ Tracer Grade: _____
Tracer Gas Detection Meter:
Model: _____
~~Serial:~~ _____

Time	Sampling Rate	Concentration

~~**Purging Details:**~~ Date: _____ Personnel: _____ Pump/Equipment: _____
Purging Rate: _____ Start Time: _____ End Time: _____
~~*See Ambient Air and Soil Vapor Sampling Form for sample collection details.*~~

Notes: Insert bolt into 1/4" Swag fitting. Pry up bolt w/flat bar. Remove swag fitting + plug bottom of hole w/permagum. Remove old hydraulic cement from drilled hole. Insert additional permagum + pack into bottom of hole. Fill remaining open hole w/ hydraulic cement + smooth to concrete surface.

F:\STANDARDUCO Forms\SoilGasWell.pub

COPYRIGHT© 2010 THE JOHNSON COMPANY, INC. DO NOT REPRODUCE OR DISTRIBUTE

Soil Gas Well Construction Log

The Johnson Company, Inc.
100 State Street, Suite 600
Montpelier, VT 05602
Tel. (802) 229-4600

pg.

Project Name: Unifirst
Project Number: 1-2114-2
Site Location: Woburn, MA

Well ID: SV-09 Field Personnel: TRO Recorded by: TRO

Permit Number: _____ Installation Date: Removed Point 8/16/10 Driller: _____

Drilling Method: _____ Drilling Fluid: _____ Fluid Loss During Drilling: _____

Ambient PID Reading: 0.0 ppb Borehole PID Reading: 0.0 ppb

Well Construction Details: (all measurements relative to ground surface)

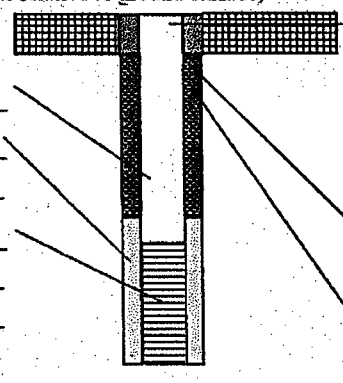

Riser Pipe Material: _____

Sandpack Material: _____

Top: _____ Bottom: _____

Screen Material: _____

Top: _____ Bottom: _____

Length: _____ Diameter: _____

Protective Casing

Material: _____

Slab Thickness: _____

Material Under Slab: _____

Road Box Seal: _____

Annular Seal Material: Hydraulic Cement

Top: 0.0 Bottom: 0.15'

Secondary Seal Material: Permagum

Top: 0.15' Bottom: 0.18'

Notes: _____

~~**Integrity Testing:**~~

Date Completed: _____ Injection Pressure: _____

Tracer Type: _____ Tracer Grade: _____

Tracer Gas Detection Meter:

Model: _____

Serial: _____

Time	Sampling Rate	Concentration

~~**Purging Details:**~~ Date: _____ Personnel: _____ Pump/Equipment: _____

Purging Rate: _____ Start Time: _____ End Time: _____

~~*See Ambient Air and Soil Vapor Sampling Form for sample collection details.*~~

Notes: Insert Bolt into 1/4" Swag fitting, Pry up w/flat bar. Remove swag fitting. Remove old hydraulic cement from drilled hole, Insert permagum into 1/4" hole, pack additional permagum ontop. Fill remaining hole w/ hydraulic cement to concrete surface.

F:\STANDARD\JCO Forms\SoilGasWell.pub

COPYRIGHT© 2010 THE JOHNSON COMPANY, INC. DO NOT REPRODUCE OR DISTRIBUTE

Soil Gas Well Construction Log

The Johnson Company, Inc.
100 State Street, Suite 600
Montpelier, VT 05602
Tel. (802) 229-4600

pg.

Project Name: Unifirst
Project Number: 1-2114-2
Site Location: Woburn MA

Well ID: SV-10 **Field Personnel:** TRO **Recorded by:** TRO

Permit Number: _____ **Installation Date:** Removed Point 8/16/10 **Driller:** _____

Drilling Method: _____ **Drilling Fluid:** _____ **Fluid Loss During Drilling:** _____

Ambient PID Reading: 0.0 ppb **Borehole PID Reading:** 0.0 ppb

Well Construction Details: (all measurements relative to ground surface)

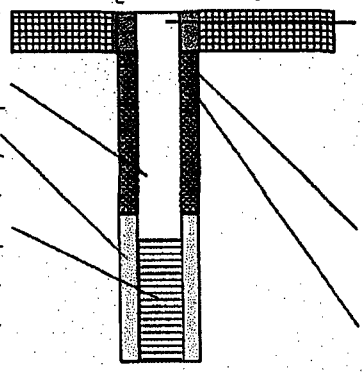

Riser Pipe Material: _____

Sandpack Material: _____
Top: _____ Bottom: _____

Screen Material: _____
Top: _____ Bottom: _____
Length: _____ Diameter: _____

Protective Casing
Material: _____
Slab Thickness: _____
Material Under Slab: _____
Road Box Seal: _____

Annular Seal Material: Hydraulic Cement
Top: 0.0 Bottom: 0.15'

Secondary Seal Material: Permagum
Top: 0.15' Bottom: 0.19'

Notes: Original Plug Intact.

~~**Integrity Testing:**~~
Date Completed: _____ Injection Pressure: _____
Tracer Type: _____ Tracer Grade: _____
Tracer Gas Detection Meter:
Model: _____
Serial: _____

Time	Sampling Rate	Concentration

~~**Purging Details: Date:**~~ _____ Personnel: _____ Pump/Equipment: _____
Purging Rate: _____ Start Time: _____ End Time: _____
~~*See Ambient Air and Soil Vapor Sampling Form for sample collection details.*~~

Notes: Insert Bolt into 1/4" swag fitting. Pry up bolt w/flat bar. Remove swag fitting + plug hole w/permagum. Remove old hydraulic cement from drilled hole. Insert additional permagum and pack into bottom of hole. Filled remaining open hole w/hydraulic Cement + smooth to concrete surface.

F:\STANDARD\JCO Forms\SoilGasWell.pub

COPYRIGHT© 2010 THE JOHNSON COMPANY, INC. DO NOT REPRODUCE OR DISTRIBUTE

Soil Gas Well Construction Log

The Johnson Company, Inc.
100 State Street, Suite 600
Montpelier, VT 05602
Tel. (802) 229-4600

pg.

Project Name: Unifirst
Project Number: 1-2114-2
Site Location: Woburn MA

Well ID: SV-11 **Field Personnel:** TRO **Recorded by:** TRO

Permit Number: _____ **Installation Date:** Removal Point 8/16/10 **Driller:** _____

Drilling Method: _____ **Drilling Fluid:** _____ **Fluid Loss During Drilling:** _____

Ambient PID Reading: 0.0 ppb **Borehole PID Reading:** 1070. ppb

Well Construction Details: (all measurements relative to ground surface)

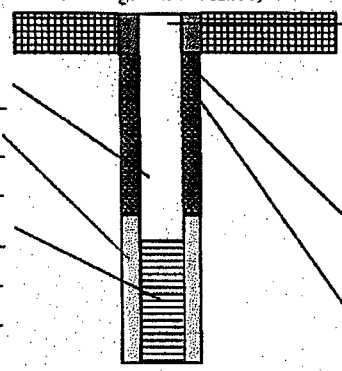

Riser Pipe Material: _____

Sandpack Material: _____
Top: _____ Bottom: _____

Screen Material: _____
Top: _____ Bottom: _____
Length: _____ Diameter: _____

Protective Casing
Material: _____
Slab Thickness: _____
Material Under Slab: _____
Road Box Seal: _____

Annular Seal Material: Hydraulic Cement
Top: 0.0 Bottom: 0.13'

Secondary Seal Material: Permagum
Top: 0.13' Bottom: 0.17'

Notes: Original Plug Intact.

~~**Integrity Testing:**~~
Date Completed: _____ Injection Pressure: _____
Tracer Type: _____ Tracer Grade: _____
Tracer Gas Detection Meter:
Model: _____
Serial: _____

Time	Sampling Rate	Concentration

~~**Purging Details: Date:**~~ _____ Personnel: _____ Pump/Equipment: _____
Purging Rate: _____ Start Time: _____ End Time: _____
~~*See Ambient Air and Soil Vapor Sampling Form for sample collection details.*~~

Notes: Insert Bolt into 1/4" swag fitting. Pry up bolt w/flat bar. Remove swag fitting + plug bottom of hole w/permagum. Remove old hydraulic cement from drilled hole. Insert additional permagum and pack into bottom of hole. Fill remaining open hole w/hydraulic cement + smooth to concrete surface.

F:\STANDARD\CO Forms\SoilGasWell.pub

COPYRIGHT© 2010 THE JOHNSON COMPANY, INC. DO NOT REPRODUCE OR DISTRIBUTE

Soil Gas Well Construction Log

The Johnson Company, Inc.
100 State Street, Suite 600
Montpelier, VT 05602
Tel. (802) 229-4600

pg.

Project Name: Uni first
Project Number: 1-2114-2
Site Location: Woburn MA

Well ID: SV-12 **Field Personnel:** TRO **Recorded by:** TRO

Permit Number: _____ **Installation Date:** Removed Prt. 8/16/10 **Driller:** _____

Drilling Method: _____ **Drilling Fluid:** _____ **Fluid Loss During Drilling:** _____

Ambient PID Reading: 0.0 ppb **Borehole PID Reading:** 0.0 ppb

Well Construction Details: (all measurements relative to ground surface)

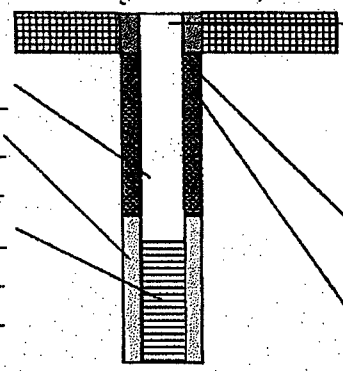

Riser Pipe Material: _____

Sandpack Material: _____
Top: _____ Bottom: _____

Screen Material: _____
Top: _____ Bottom: _____
Length: _____ Diameter: _____

Protective Casing
Material: _____
Slab Thickness: _____
Material Under Slab: _____
Road Box Seal: _____

Annular Seal Material: Hydraulic Cement
Top: 0.0 Bottom: 0.15'

Secondary Seal Material: Permagum
Top: 0.15' Bottom: 0.17'

Notes: Original Plug Intact

~~**Integrity Testing:**~~
Date Completed: _____ Injection Pressure: _____
Tracer Type: _____ Tracer Grade: _____
Tracer Gas Detection Meter:
Model: _____
Serial: _____

Time	Sampling Rate	Concentration

~~**Purging Details:**~~ Date: _____ Personnel: _____ Pump/Equipment: _____
Purging Rate: _____ Start Time: _____ End Time: _____
~~*See Ambient Air and Soil Vapor Sampling Form for sample collection details.*~~

Notes: Insert bolt into 1/4" swag fitting. Pry up bolt w/flat bar. Remove swag fitting + plug bottom of hole w/permagum. Remove old hydraulic cement from drilled hole. Insert additional permagum + pack into bottom of hole. Fill remaining open hole w/hydraulic cement + smooth to concrete surface.

F:\STANDARD\JCO Forms\SoilGasWell.pub

COPYRIGHT© 2010 THE JOHNSON COMPANY, INC. DO NOT REPRODUCE OR DISTRIBUTE

Soil Gas Well Construction Log

The Johnson Company, Inc.
100 State Street, Suite 600
Montpelier, VT 05602
Tel. (802) 229-4600

pg.

Project Name: Unifirst
Project Number: 1-2114.2
Site Location: Woburn MA

Well ID: SV-13 **Field Personnel:** TRO Removed Point. **Recorded by:** TRO

Permit Number: _____ **Installation Date:** 08/16/10 **Driller:** _____

Drilling Method: _____ **Drilling Fluid:** _____ **Fluid Loss During Drilling:** _____

Ambient PID Reading: 0.0 ppb **Borehole PID Reading:** 0.0 ppb

Well Construction Details: (all measurements relative to ground surface)

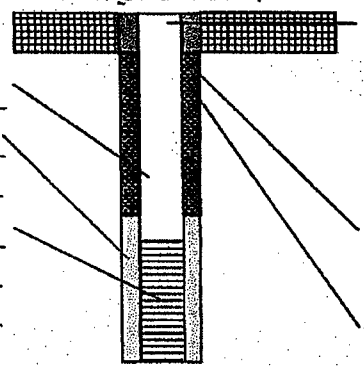

Riser Pipe Material: _____

Sandpack Material: _____
Top: _____ Bottom: _____

Screen Material: _____
Top: _____ Bottom: _____
Length: _____ Diameter: _____

Protective Casing
Material: _____
Slab Thickness: _____
Material Under Slab: _____
Road Box Seal: _____

Annular Seal Material: Hydraulic Cement
Top: 0.0 Bottom: 0.17'

Secondary Seal Material: Permagum
Top: 0.17' Bottom: 0.20'

Notes: original plug Intact

~~**Integrity Testing:**~~
Date Completed: _____ Injection Pressure: _____
Tracer Type: _____ Tracer Grade: _____
Tracer Gas Detection Meter:
Model: _____
Serial: _____

Time	Sampling Rate	Concentration

~~**Purging Details:**~~ Date: _____ Personnel: _____ Pump/Equipment: _____
Purging Rate: _____ Start Time: _____ End Time: _____
~~*See Ambient Air and Soil Vapor Sampling Form for sample collection details.*~~

Notes: Insert Bolt into 1/4" swag fitting. Pry up bolt w/ flat Bar. Remove swage fitting + plug bottom of hole w/ permagum. Remove old hydraulic cement from drilled hole. Insert additional permagum and pack into bottom of hole. Fill remaining open hole w/ hydraulic Cement + smooth to concrete surface.

F:\STANDARD\CO Forms\SoilGasWell.pub

COPYRIGHT© 2010 THE JOHNSON COMPANY, INC. DO NOT REPRODUCE OR DISTRIBUTE

Soil Gas Well Construction Log

The Johnson Company, Inc.
100 State Street, Suite 600
Montpelier, VT 05602
Tel. (802) 229-4600

pg.

Project Name: Unifirst
Project Number: 1-2114-2
Site Location: Woburn MA

Well ID: SV-14 **Field Personnel:** TRO **Recorded by:** TRO

Permit Number: _____ **Installation Date:** Removed Pmt. 8/16/10 **Driller:** _____

Drilling Method: _____ **Drilling Fluid:** _____ **Fluid Loss During Drilling:** _____

Ambient PID Reading: 0.0 ppb **Borehole PID Reading:** 0.0 ppb

Well Construction Details: (all measurements relative to ground surface)

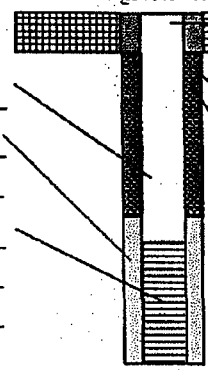

Riser Pipe Material: _____

Sandpack Material: _____
Top: _____ Bottom: _____

Screen Material: _____
Top: _____ Bottom: _____
Length: _____ Diameter: _____

Protective Casing
Material: _____
Slab Thickness: _____
Material Under Slab: _____
Road Box Seal: _____

Annular Seal Material: Hydraulic Cement
Top: 0.0 Bottom: 0.15'

Secondary Seal Material: Permagum
Top: 0.15' Bottom: 0.18'

Notes: Original Plug found Intact

~~**Integrity Testing:**~~
Date Completed: _____ Injection Pressure: _____
Tracer Type: _____ Tracer Grade: _____

Tracer Gas Detection Meter:
Model: _____
~~Serial:~~ _____

Time	Sampling Rate	Concentration

~~**Purging Details:**~~ Date: _____ Personnel: _____ Pump/Equipment: _____
~~Purging Rate:~~ _____ ~~Start Time:~~ _____ End Time: _____
~~*See Ambient Air and Soil Vapor Sampling Form for sample collection details.*~~

Notes: Insert bolt into 1/4" swag fitting. Pry up bolt w/flat bar. Remove swag fitting & plug bottom of hole w/permagum. Remove old hydraulic cement from drilled hole. Insert additional permagum & pack into bottom of hole. Fill remaining open hole w/ hydraulic cement & smooth to concrete surface.

F:\STANDARD\JCO Forms\SoilGasWell.pub

COPYRIGHT© 2010 THE JOHNSON COMPANY, INC. DO NOT REPRODUCE OR DISTRIBUTE

Soil Gas Well Construction Log

The Johnson Company, Inc.
100 State Street, Suite 600
Montpelier, VT 05602
Tel. (802) 229-4600

pg.

Project Name: Unifirst
Project Number: 1-2114-2
Site Location: Woburn, MA

Well ID: SV-15 **Field Personnel:** TRO **Recorded by:** TRO

Permit Number: _____ **Installation Date:** Removal Point 8/16/10 **Driller:** _____

Drilling Method: _____ **Drilling Fluid:** _____ **Fluid Loss During Drilling:** _____

Ambient PID Reading: 0.0 ppb **Borehole PID Reading:** 0.0 ppb

Well Construction Details: (all measurements relative to ground surface)

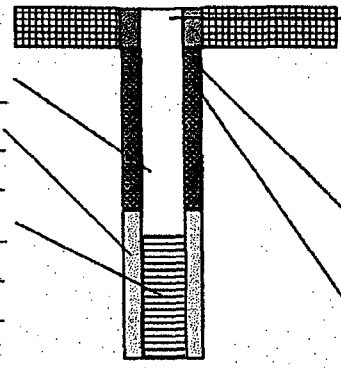

Riser Pipe Material: _____

Sandpack Material: _____
Top: _____ Bottom: _____

Screen Material: _____
Top: _____ Bottom: _____
Length: _____ Diameter: _____

Protective Casing
Material: _____
Slab Thickness: _____
Material Under Slab: _____
Road Box Seal: _____

Annular Seal Material: Hydraulic Cement
Top: 0.0 Bottom: 0.16'

Secondary Seal Material: Permagum
Top: 0.16' Bottom: 0.19'

Notes: original Plug in tack.

~~**Integrity Testing:**~~
Date Completed: _____ Injection Pressure: _____
Tracer Type: _____ Tracer Grade: _____
Tracer Gas Detection Meter:
Model: _____
Serial: _____

Time	Sampling Rate	Concentration

~~**Purging Details:** Date:~~ _____ Personnel: _____ Pump/Equipment: _____
Purging Rate: _____ Start Time: _____ End Time: _____
~~*See Ambient Air and Soil Vapor Sampling Form for sample collection details.*~~

Notes: Insert Bolt into 1/4" swag fitting. Pry up w/flat bar, Remove swag fitting. Remove old hydraulic cement from drilled hole, Insert permagum into 1/4" hole, pack additional permagum on top. Fill remaining hole w/ hydraulic cement smooth to concrete surface.

F:\STANDARD\JCO Forms\SoilGasWell.pub

COPYRIGHT© 2010 THE JOHNSON COMPANY, INC. DO NOT REPRODUCE OR DISTRIBUTE

The Johnson Company, Inc.
100 State Street, Suite 600
Montpelier, VT 05602

Phone: (802) 229-4600
Fax: (802) 229-5876
www.johnsonco.com

PID CALIBRATION SHEET				
Equipment ID: ppb Rae 3000		Serial # 594-000116		Lamp: 11.7 eV
Brand of Standard		Spec-Air		
Lot #		9869		
Expiration Date		11/10		
Date	Time	Initials	~~100~~ 10.0 ppm Isobutylene Value (~~ppm~~ ppb) TRO 8/16/10	Site Background Value (~~ppm~~ ppb)
8-16-10	10:00	TRO	10.1	0.0

F:\STANDARD\CO Forms\CALIBRATION SHEET 2.doc