**DES Waste Management Division**
**29 Hazen Drive; PO Box 95**
**Concord, NH 03302-0095**

# Sampling and Analysis Plan
# LNAPL Laser Induced Fluorescence / Membrane Interface Probe Investigation

**July 2012**
**Troy Mills Landfill Superfund Site**
**Troy, New Hampshire**
**Cerclis ID NHD980520217**
**NHDES 198405082**

Prepared For:
New Hampsire Department of Environmental Services
29 Hazen Drive
Concord, New Hampshire 03301
(603) 271-2900
Robin Mongeon, P.E
robin.mongeon@des.nh.gov

GZA GeoEnvironmental, Inc.
380 Harvey Road
Manchester, New Hampshire 03103
603-232-8739
Michael B. Asselin
michael.asselin@gza.com

July 20, 2012

Steven R. Lamb

Digitally signed by Steven R. Lamb
DN: cn=Steven R. Lamb, o=GZA, ou=GZA, email=steven.lamb@gza.com, c=US
Date: 2012.07.23 14:56:22 -04'00'



SDMS Doc ID 518781

**FINAL**
**SAMPLING AND ANALYSIS PLAN**
**LASER INDUCED FLUORESCENCE / MEMBRANE INTERFACE PROBE INVESTIGATION**
**JULY 2012**
**TROY MILLS LANDFILL SUPERFUND SITE**
**CERCLIS ID NHD980520217 / NHDES 198405082**
**TROY, NEW HAMPSHIRE**

**PREPARED FOR:**
New Hampshire Department of Environmental Services
Waste Management Division, Hazardous Waste Remediation Bureau
Concord, New Hampshire

**PREPARED BY:**
GZA GeoEnvironmental, Inc.
Manchester, New Hampshire

July 2012
File No. 04.0029395.11

Copyright © 2012 GZA GeoEnvironmental, Inc.

**SAMPLING AND ANALYSIS PLAN**
**LNAPL LASER INDUCED FLUORESCENCE / MEMBRANE INTERFACE PROBE INVESTIGATION**
**JUNE 2012**
**TROY MILLS LANDFILL SUPERFUND SITE**
**CERCLIS ID NO. NHD980520217 / NHDES # 198405083**
**TROY, NEW HAMPSHIRE**

*Document Title*

Michael B. Asselin, GZA GeoEnvironmental, Inc.
*Prepared by: (Preparer's Name and Organizational Affiliation)*

380 Harvey Road Manchester, New Hampshire (603) 232-8763
*Address and Telephone Number*

July 17, 2012
*Day/Month/Year*

US Environmental Protection Agency
Remedial Project Manager:

*Signature*
Richard W. Hull
*Printed Name/Date*

New Hampshire Department of Environmental Services
Project Manager:

*Signature*
Robin Mongeon, P.E.
*Printed Name/Date*

GZA Principal-in-Charge:

*Signature*
Steven R. Lamb, P.G., C.G.W.P.
*Printed Name/Date*

GZA Senior Project Manager:

*Signature*
Michael B. Asselin
*Printed Name/Date*

GZA Project Quality Assurance Officer:

*Signature*
Amy T. Doherty, P.G.
*Printed Name/Date*

## TABLE OF CONTENTS

Page

**SIGNATURE PAGE** **i**
**TABLE OF CONTENTS** **ii**
**1.0 INTRODUCTION** **1**
1.1 SITE DESCRIPTION AND BRIEF HISTORY 1
1.2 SUMMARY OF SITE HYDROGEOLOGY 2
1.3 BRIEF SUMMARY OF PREVIOUS INVESTIGATIONS AND CONTAMINANTS-OF-CONCERN 3
1.3.1 LNAPL Investigations 5
1.3.2 Well Replacement 6
1.3.3 Groundwater Investigation in the Area of Well TRY_MW-205 7
1.4 INTERIM CLEANUP LEVELS AND AMBIENT GROUNDWATER QUALITY STANDARDS 7
1.5 DATA QUALITY OBJECTIVES 8
**2.0 PROJECT ORGANIZATION AND RESPONSIBILITIES** **9**
**3.0 TASK DESCRIPTIONS - FIELD MONITORING AND SAMPLING PROTOCOL** **9**
3.1 SAMPLE IDENTIFICATION 13
3.1.1 Specific Sample Identification 13
3.2 MULTI-MEDIA INVESTIGATION / SAMPLING AND ANALYSIS 13
3.2.1 Water Level and LNAPL Thickness Measurements 14
3.2.2 Pilot Borings 15
3.2.3 MIP / HPT Scanning for VOC Subsurface Contamination 16
3.2.4 LIF Scanning of Subsurface LNAPL-Impacted Soil 17
3.2.5 Groundwater Sampling Procedures 18
3.2.6 Subsurface Soil Sampling Procedures 19
3.3 OTHER PLANNED ACTIVITIES 20
**4.0 QUALITY CONTROL** **20**
4.1 EQUIPMENT MAINTENANCE AND CALIBRATION 20
4.2 FIELD QUALITY CONTROL 23
4.3 DATA VERIFICATION AND VALIDATION 24
4.4 QUALITY ASSURANCE FIELD AUDITS 25
**5.0 DOCUMENTATION** **25**
5.1 FIELD DATA MANAGEMENT 25
5.2 CHAIN-OF-CUSTODY PROCEDURES 26
5.3 TECHNICAL PROJECT REPORT 26
5.3.1 Quality Assurance/Quality Control Section of Report 27

**TABLES**

TABLE 1 SUMMARY OF ANALYTICAL TEST METHODS AND LABORATORY REPORTING LIMITS / DETECTION LIMITS AND REGULATORY ACTION LIMITS

TABLE 2 MULTI-MEDIA SAMPLING PLAN

TABLE 3 MEDIA, ANALYSIS, TEST METHODS, CONTAINERS/SAMPLE VOLUME, PRESERVATION & HOLD TIME

TABLE 4 WELL CONSTRUCTION INFORMATION

TABLE 5 SUMMARY OF QUALITY ASSURANCE SAMPLES TO BE COLLECTED

TABLE 6 GROUNDWATER / SOIL SAMPLING CROSS-REFERENCE TABLE

TABLE 7 PROPOSED LNAPL SOIL SAMPLING LOCATIONS

TABLE 8 PROPOSED MIP/HPT GROUNDWATER SAMPLING LOCATIONS

**FIGURES**

FIGURE 1 SITE PLAN / INITIAL PILOT BORING LOCATIONS

**APPENDICES**

APPENDIX A PROJECT ORGANIZATION CHART AND RESPONSIBLITIES

APPENDIX B GZA FIELD SAMPLING SOPS

*L-1* WATER LEVEL / LNAPL THICKNESS MEASUREMENTS

*Water Level Measurement Form*

*LNAPL Measurement Form*

*L-2* CALIBRATION OF HACH TURBIDITY METER

Calibration Data Form

*L-3* FIELD MONITORING: PHOTOIONIZATION DETECTOR

*L-4* ROTOSONIC DRILLING

*Boring Log Form*

*ASTM D 6914-04 Standard Practice for Sonic Drilling for Site Characterization and the Installation of Subsurface Monitoring Devices*

*ASTM D 5434-94 Standard Guide for Field Logging of Subsurface Explorations of Soil and Rock*

*L-5* Burmister Classification System

*L-6* GUIDE FOR DESCRIPTION OF SOILS

*L-7* COLUMBIA TECHNOLOGIES MIP SOP

*L-8* COLUMBIA TECHNOLOGIES HPT SOP

*L-9* COLUMBIA TECHNOLOGIES LIF SOP

*L-10* SOIL SAMPLING USING DIRECT PUSH DRILLING

*Boring Log Form*

*Geoprobe Macro-Core MC5 Soil Sampling System SOP MK3139*

*ASTM D 6282 Geoprobe Soil Sampling*

*L-11* SAMPLING WITH WATERRA HAND PUMP USING GEOPROBE TOOLING

Wattera Sampling Worksheet

*ASTM D 6001 - GeoProbe Groundwater Sampling*

*GeoSearch Geoprobe Groundwater Sampling Description Attachment*

*L-12* *GEOPROBE PREPACK WELL INSTALLATION TECHNICAL BULLETIN 992500*

*ASTM D 6724 Geoprobe Well Installation*

*L-13* WELL DEVELOPMENT

*L-14* SAMPLING EQUIPMENT DECONTAMINATION PROCEDURE

*L-15* CHAIN-OF-CUSTODY, SAMPLE PACKAGING AND SHIPMENT PROCEDURES

*NHDPHS Example Laboratory Chain-of-Custody*

*ESS Example Laboratory Chain-of-Custody*

# 1.0 INTRODUCTION

This Sampling and Analysis Plan (SAP) has been prepared to provide site-specific information regarding investigation activities planned for June 2012 at the Troy Mills Landfill Superfund Site (Site) located in Troy, New Hampshire. This SAP has been prepared consistent with and with references to the current New Hampshire Department of Environmental Services (NHDES) Hazardous Waste Remediation Bureau (HWRB) Master Quality Assurance Project Plan (Master QAPP), United States Environmental Protection Agency (EPA) RFA#08036, available on the NHDES website.[1] The HWRB Master QAPP generally describes the data quality objectives (DQOs), analytical procedures and measurements (including laboratory quality-control protocols necessary to achieve DQOs), and data-assessment procedures for the evaluation and identification of any data limitations.

The June 2012 investigation activities addressed in this SAP including the following:

- Laser Induced Fluorescence (LIF) subsurface investigation designed to provide additional data relative to the distribution of the residual subsurface LNAPL impacted soil and source area;
- Membrane Interface Probe (MIP) and Hydraulic Profiling Tool (HPT) subsurface investigation designed to collect data relative to groundwater quality and soil hydraulic properties in the area of the groundwater monitoring wells referred to as the "800 series" wells;
- LNAPL elevation monitoring from select locations within the LNAPL interceptor; and
- Installation of a new monitoring well to provide groundwater quality data proximate to the wetland /LNAPL interface area.

This SAP includes sampling and monitoring locations, procedures and protocols, any investigation-specific DQOs, quality assurance sampling and documentation, and other project requirements. Any deviations from the procedures contained within this SAP shall be approved by the NHDES Project Manager and the Quality Assurance (QA) Coordinator in advance, following concurrence with EPA.

## 1.1 SITE DESCRIPTION AND BRIEF HISTORY

The Site is a two-acre former drum disposal area in Troy, New Hampshire (Cheshire County) located about 1.5 miles south of the Center of Troy (refer to **Figure 1**). The two-acre Site is located in the southeastern corner of a 270-acre parcel, which also includes a solid waste landfill. Access to the Site is via the Department of Resources and Economic Development trail (former railroad) and a private gravel pit road off Rockwood Pond Road in Fitzwilliam, New Hampshire.

Troy Mills, Inc. disposed of hazardous substances that were generated at its acrylic fabric manufacturing facility in Troy between 1967 and 1978. An estimated 6,000 to 10,000 55-gallon drums of waste liquid and sludge containing mostly plasticizers such as bis(2-ethylhexyl)phthalate and a petroleum-based solvent known as Varsol™ were disposed of in

[1] *http://des.nh.gov/organization/divisions/waste/hwrb/documents/hwrb_master_qapp.pdf*

this area. Other drummed waste included pigments, surplus mixes, and tank residuals of vinyl resins, paint resins, and top coating products. Between 1979 and 2005, several investigations of the Site have occurred. Investigation findings identified volatile organic compounds (VOCs), semi-VOCs, and inorganics in groundwater, leachate, surface soil, surface water, and sediment in and around the drum disposal area.

In September 2003 the Site was listed on the National Priorities List and a time-critical removal action was initiated. Between 2004 and 2005, the EPA completed a drum and flammable liquid removal and contaminated soil/sludge removal action; constructed three light non-aqueous phase liquid (LNAPL) interceptor trenches; and constructed a 2-foot-thick permeable soil cap over the excavation area. A subsequent remedial investigation of the Site by EPA identified a plume of groundwater contamination consisting of organic contaminations (alkylbenzenes, chlorinated solvents, phthalates, and toluene). It was concluded that the contaminants of concern were naturally biodegrading and that removal of the buried drums eliminated the primary source of on-going contamination to groundwater.

Pursuant to the September 30, 2005 Record of Decision (ROD) for the Site, the selected remedy for contaminated groundwater, LNAPL, and residual soil contamination included several remedial action components:

- Maintenance of the LNAPL interceptor trenches;
- Maintenance of a permeable soil cap;
- Monitored natural attenuation (MNA) of groundwater contaminants including the monitoring of groundwater, surface water, sediment, leachate, and wetlands;
- Institutional controls; and
- Five-year reviews.

## 1.2 SUMMARY OF SITE HYDROGEOLOGY

Based on information collected by others, bedrock underlying the Site is comprised of biotite schist of the Littleton Formation.[2] The biotite schist at the Site is typically dark gray, hard, folded, with high angle foliation and fractures, and quartz veins. Seams of granite, quartz, and pegmatite are also present within the schist. Bedrock fractures have been identified trending both northeast and northwest.

The overburden primarily consists of a sand unit, ablation till, and lodgment till. The sand layer is typically less than 6 feet in thickness where it remains in place and is mostly saturated in the low area west of the access road. The ablation till is at its thickest beneath the southwestern part of the former drum disposal area, where it is up to 40 feet thick. This unit gradually thins toward Rockwood Brook, where it is less than 10 feet thick, and is very thin to absent near the eastern edge of the former drum disposal area where the bedrock is shallow. The lodgment till is thickest at the bottom of the valley floor near Rockwood Brook, where boring logs indicate a thickness of greater than 35 feet. This till unit thins eastward toward the eastern edge of the former drum disposal area.

[2] Final Feasibility Study, Troy Mills Landfill Superfund Site, Troy, New Hampshire, prepared by Metcalf & Eddy, Inc., dated September 2005.

Groundwater flow in the shallow overburden has been measured by others to be to the west or northwest, toward Rockwood Brook. The hydraulic gradient is reportedly quite steep to the east of the access road, reflecting the low permeability of the till deposits in which the water table occurs. It has been concluded that the vertical gradients are generally downward or neutral except in areas where groundwater is rising to discharge into a stream or wetland.

## 1.3 BRIEF SUMMARY OF PREVIOUS INVESTIGATIONS AND CONTAMINANTS-OF-CONCERN

From 1979 to the present, numerous investigations have been conducted and are described in greater detail within the Final Feasibility Study (FS), prepared by Metcalf & Eddy, Inc. (M&E), dated September 2005. Included below is a summary of some of the information from the investigation history as provided in the 2005 FS:

> "Under the State hazardous remediation program, consultants to TMI completed a Phase I investigation of the drum disposal area in August 1981, a Phase II in December 1981, a Phase III in July 1982, and entered into a Consent Agreement with NHDES in January of 1985 (Weston, 2003). The Consent Agreement required TMI to submit a Waste Analysis Plan, a Preliminary Risk Assessment, a Remedial Investigation/Feasibility Study, and an engineering design of the selected remedial alternative. The Preliminary Human Health Risk Assessment, completed in March 1986, concluded that a Level 2 Risk Assessment should be conducted since concentrations of VOCs in groundwater showed potentially elevated risk. The RI was initiated in 1987, and the risk assessment was completed in 1991 (Weston, 2003).
>
> "Although the risk assessment concluded that risk to human health was negligible, it was later determined that the Site had not been thoroughly characterized. The Phase I Pre-Design study, conducted in 1995, revealed LNAPL in newly-installed wells, a leachate outbreak, and subsequent analyses indicated that concentrations of contaminants in groundwater exceeded the New Hampshire Ambient Groundwater Quality Standards (AGQS) (Weston, 2003). The Pre-Design study recommended a containment remedy and further evaluation of the potential for intrinsic remediation of site groundwater (GEI Consultants, Inc., 1995).
>
> "The Phase II Pre-Design report issued in September 1998 proposed the installation of a hanging slurry wall combined with product collection and a flow-through (intrinsic) treatment gate downgradient of the buried drum area and the leachate outbreak. In addition, the NHDES questioned the conclusion made by the consultant that only a small percentage of the drums remaining in the drum disposal area were still intact and contained liquid. Instead, the NHDES supported a containment-based remedial action, and in April 2000 agreed to a modified version of a containment-based remedial action originally proposed in 1995 with the condition of commitment by TMI to long-term operation, maintenance, and monitoring (Weston, 2003).
>
> "In September 2000, TMI requested to defer remediation of the drum disposal area to 2003/2004 due to unfavorable corporate and financial market conditions. In December 2000, NHDES approved the deferral schedule provided in September, based on the remote location of the Site, combined with monitoring data that did not suggest an imminent and substantial threat to public health or the environment. TMI filed for Chapter 11 bankruptcy on November 2, 2001.

"At the request of the State, since 2002, the EPA Superfund Technical Assessment and Response Team (START) and Emergency and Rapid Response (ERRS) contractors have conducted removal actions at the Site. Initial activities conducted as part of the removal actions included the construction of LNAPL interceptor trenches downgradient of the drum disposal area, removal of nine 55-gallon drums of hazardous waste solids and non-Resource Conservation Recovery Act (RCRA) regulated materials, installation of a fence along the access road, re-grading of the access road and construction of additional access roads, installation of eight additional monitoring wells and piezometers, installation of sorbent booms at several locations to temporarily contain leachate outbreaks, slug tests on five site monitoring wells, construction of a berm along the access road upgradient of the leachate interceptor trenches to divert stormwater runoff, a preliminary assessment and site investigation, and an expanded site investigation.

"Between July and November 2004 the EPA START and ERRS contractors excavated and removed 7,692 55-gallon drums from the 2-acre drum disposal area. In addition, 29,924 gallons of flammable liquid waste and 26,244 tons of contaminated soil, 3,099 cubic yards of waste sludge, as well as shredded drums have been removed from the Site (EPA, 2004b). Excavated soil was field screened and soil that did not exceed screening standards was used to backfill the excavation. Removal and off-site disposal of additional contaminated soil and placement of a permeable cover, consisting of 2 feet of clean soil, and re-vegetation is occurring during the summer of 2005.

"In July 2004, EPA's Superfund Remedial Program retained M&E under the RAC contract to initiate a remedial investigation to determine if any additional remedial actions would be needed after the completion of the removal action. The RI documented the nature and extent of residual contamination and evaluated risks to human health and the environment from any current or expected future exposures to residual contamination. Five additional wells were installed at the Site and groundwater, surface water, soils, and sediments were sampled in December of 2004.

"The RI report was completed in July 2005 and documented a plume of groundwater contamination, approximately 8-9 acres in size. Organic contaminants such alkybenzenes, chlorinated solvents, phthalates, and toluene were identified as the primary contaminants-of-concern. The RI concluded that most of the contaminants-of-concern were biodegrading naturally and that by removing the drums, the source was removed..."

The 2005 FS included the establishment of remedial action objectives and preliminary remediation goals; identification and screening of potential treatment and containment technologies, and the development and evaluation of remedial alternatives for the Site. It was concluded by M&E that the primary contaminants posing human health risks and hazards were bis(2-ethylhexyl)phthalate in leachate and various organics and inorganics in groundwater.

The first statutory five-year review was completed by EPA in September 2010 to document the status of the selected remedy relative to it being protective of human health and the environment. The trigger for the five-year review was the initiation of the ROD-specified cleanup actions completed in the fall of 2005. The five-year review documented that the remedy was currently protective of human health and the environment as envisioned by the ROD. However, in order for the remedy to be considered protective over the long term, the following actions were recommended:

- With regard to effectiveness of institutional controls at the Site, report violations and vandalism to the State and the Town for response with appropriate follow-up monitoring and enforcement actions. Repair damaged wells with new locking caps, post warning signs at the inner gate and former drum disposal area, and consider fencing the former drum disposal area to restrict access by all terrain vehicles;
- Conduct a supplemental investigation of the residual LNAPL source area and further evaluate effectiveness of the LNAPL interceptor trenches in capturing remaining LNAPL;
- Perform supplemental hydrogeologic studies to confirm hydrostratigraphy and the contaminant of concern fate and transport in groundwater to confirm the effectiveness of the MNA management of migration remedy at the Site and to better forecast time to clean up; and
- Perform a hydrologic evaluation within the transition zone between groundwater and surface water in the Rockwood Brook Wetland Study area and Rockwood Brook. Review existing data from nearby groundwater monitoring wells relative to appropriate benchmark ecological risk screening values applied to receptor exposures within the ground water – surface water transition zone.

Included as an appendix to the five-year review is GZA's "*June 2009 Through June 2010 Sampling Data Report*" (Data Report) for the Site. This Data Report summarizes the 2009-2010 monitoring activities, data results, and GZA's conclusions and recommendations regarding the findings. Refer to the report text for specific information.

Supplemental investigations were performed in the fall 2010 and during 2011 based on the conclusions and recommendations of both the five-year review and the Data Report. The supplemental investigations were designed to further investigate LNAPL distribution within the interceptor trench area; well replacement; and installation of additional monitoring wells to investigate the elevated groundwater concentrations in the area of well TRY_MW-205. These activities are summarized below:

### 1.3.1 LNAPL Investigations

GZA observed the advancement of eight test borings (TRY_MW-C1S through TRY_MW-C8S) by Expedition Drilling (Expedition) using an all-terrain vehicle (ATV) drill rig between November 16 and 19, 2010 (refer to **Figure 1** for an illustration of the well locations). The test borings were completed with shallow overburden LNAPL monitoring wells (2-inch polyvinyl chloride [PVC] wells). The rationale for well installation was to investigate whether LNAPL is accumulating on the upgradient side of Trench C.

During the drilling of the wells, soil samples were collected and screened with a photoionization detector (PID) for total volatile organic compounds (VOCs). Based on the known depth of LNAPL in well TRY_MW-201S, the VOC headspace samples were collected at 1-foot increments starting at least 2 feet above where the LNAPL depth was expected to be. Four of the eight wells had elevated PID total VOC readings as follows:

- Well TRY_MW-C1S (590 parts per million [ppm] at 8 feet below ground surface [bgs]);
- Well TRY_MW-C5S (351 ppm at 6 feet bgs);

- Well TRY_MW-C7S (922 ppm at 8 feet bgs); and
- Well TRY_MW-C8S (704 ppm at 12 feet bgs).

The LNAPL monitoring wells were designed to span the water table and smear zone and extended to a maximum depth of 15.6 feet bgs using hollow stem auger drilling methods (refer to the "Fall 2010 – Summer 2011 Summary Report" for the well completion logs).

GZA observed drilling activities and field screened overburden soil samples using a PID. No soil samples were submitted for laboratory analysis.

The new LNAPL observation wells were allowed to equilibrate for two weeks prior to the LNAPL thickness measurements made on November 29, 2010. A second round of LNAPL measurements were collected from the newly-installed monitoring wells on June 6, 2011 as part of the June 2011 Site monitoring activities. The LNAPL monitoring data indicated that LNAPL was collecting in the area upgradient of Trench C.

The LNAPL was further investigated using Laser Induced Florescence (LIF) technology on September 9 through September 11, 2011 in accordance with the August 2011 LNAPL Investigation Work Plan approved by the NHDES and EPA Region 1. The LNAPL-impacted soil was identified in the interceptor trench area on site and is documented in a December 20, 2011 technical memorandum titled "Summary of LNAPL Investigation, Troy Mills Landfill Superfund Site." The Geoprobe rig (GeoSearch, Inc.) was unable to investigate the suspected LNAPL source area located in or near the former drum disposal area due to subsurface resistance created by the buried liner.

### 1.3.2 Well Replacement

GZA observed the advancement of three test borings (TRY_MW-501X, TRY_MW-508X, and TRY_MW-702SX) by Expedition using an ATV drill rig from November 19 to 27, 2010 (refer to **Figure 1** for an illustration of the well locations). An attempt was also made to replace TRY_MW-301X. This was unsuccessful due to landfill material binding the augers and preventing advancement; however, the well was replaced in the spring 2011. The test borings were completed with shallow overburden groundwater monitoring wells (2-inch PVC wells).

Each monitoring well was designed to span the water table with a 5- to 10-foot screen, and extended 7 to 12 feet bgs using hollow stem auger drilling methods (refer to the "Fall 2010 – Summer 2011 Summary Report" for the well completion logs). Soil samples and field readings were not collected during boring advancement. Although the drilling depths for the new monitoring wells were restricted by refusal in these locations, sufficient increased water columns were obtained for bladder pump sampling in the June 2011 monitoring round.

GZA observed the advancement of replacement test boring (TRY_MW-301X) by Boart Longyear using a track-mounted Sonic BL 100C drill rig during May 2 to 5, 2011. TRY_MW-301 was closed by grouting using a tremie pipe. The test boring was completed with a shallow overburden groundwater monitoring well (2-inch PVC well).

### 1.3.3 Groundwater Investigation in the Area of Well TRY_MW-205

GZA observed the advancement of five new test borings (TRY_MW-801 through TRY_MW-805) by Boart Longyear using a track-mounted Sonic BL 100C drill rig from May 2 to May 5, 2011 (refer to **Figure 1** for an illustration of the well locations). The test borings were completed with shallow overburden groundwater monitoring wells (2-inch PVC well). The rationale for well installation was to investigate groundwater quality related to unexpected contaminant groundwater concentrations identified at well TRY_MW-205.

The monitoring wells were designed to be screened below the water table so that they would meet the low flow sampling criteria for well construction. A sonic drilling method (refer to the "Fall 2010 – Summer 2011 Summary Report" for the well completion logs) was used to advance the borings. The depth of the well screens was based on a combination of setting the new well screens near the same elevation as the well screen at TRY_MW-205; groundwater table observations; and bedrock depths causing drilling refusal.

Sonic drilling soil samples were obtained at standard 5-foot vertical sampling intervals within the overburden using a soil core sleeve. GZA observed drilling activities and field screened overburden soil samples in each sample sleeve using a PID. Soil consisted of between 16 feet and 30 feet of interbedded landfill cloth material and sand, underlain by glacial till characterized as brown to gray, fine to medium sand with varying amounts of silt and gravel. Elevated PID readings were encountered at locations TRY_MW-803 (1530 ppm at 25 to 26 feet bgs surface) and TRY_MW-804 (1600 ppm at 27 to 29 feet below ground surface). No elevated PID readings were encountered at the remaining well locations. No soil staining or odors were noted during drilling. The soil appeared to be fill / sand material used to fill-in the former drum excavation area.

## 1.4 INTERIM CLEANUP LEVELS AND AMBIENT GROUNDWATER QUALITY STANDARDS

Interim Cleanup levels (ICLs) for contaminants of concern were established in the ROD for groundwater. Groundwater data results will also be compared against AGQS included in Env-Or 600. Refer to the table below for a summary of the contaminants of concern and the associated ICLs and AGQS for groundwater. Soil analytical results will be compared to Soil Remediation Standards included in Env-Or 600. Refer to attached **Table 1** for a summary of the test methods and the site media including respective laboratory reporting detection limits (RDLs) and action limits being performed on groundwater and soil media as part of the June 2012 investigation activities at the Site.

| Contaminant of Concern | ROD ICLs (µg/L) | NH AGQS (µg/L) (Updated to Env-Or 603.03 ) |
|---|---|---|
| **Groundwater** | | |
| 1,4 Dioxane | 3 | 3 |
| Benzene | 5 | 5 |
| Tetrachloroethene | 5 | 5 |
| Trichloroethene | 5 | 5 |
| Vinyl Chloride | 2 | 2 |
| Benzo(a)pyrene | 0.2 | 0.2 |
| benzo(b)fluoranthene | 0.05 | 0.05 |

| Contaminant of Concern | ROD ICLs (µg/L) | NH AGQS (µg/L) (Updated to Env-Or 603.03 ) |
|---|---|---|
| bis(2-Ethylhexyl)phthalate ( also known as di [2-ethylhexyl]phthalate (DEHP) | 6 | 6 |
| Dibenzo(a,h)anthracene | 0.01 | 0.1 |
| Pentachlorophenol | 1 | 1 |
| 1,2,4-Trimethylbenzene | 50 | 330 |
| 1,3,5-Trimethylbenzene | 50 | 330 |
| 2-Butanone | 170 | 4,000 |
| P-Isopropyltoluene | 50 | 260 |
| cis-1,2 Dichloroethene | 70 | 70 |
| n-Butylbenzene | 50 | 260 |
| n-Propylbenzene | 50 | 260 |
| Tetrahydrofuran | 154 | 154 |
| Toluene | 1,000 | 1,000 |
| Naphthalene | 20 | 20 |
| Arsenic | 10 | 10 |
| Boron | 620 | 620 |
| Manganese | 300 | 840 |

**Notes:**
µg/L = micrograms per liter
ROD ICLs = Interim Cleanup Levels found in the ROD
AGQS = New Hampshire Ambient Groundwater Quality Standards

## 1.5 DATA QUALITY OBJECTIVES

Performance acceptance criteria for all new laboratory data generated for this project will be based on principal *Data Quality Indicators* including precision, bias, representativeness, completeness, comparability, and sensitivity. Consistent with the HWRB's QAPP, Section 1.4, for data generated by the NHDPHS and ESS laboratories the method detection limits (MDLs) and the RDLs established by the laboratories have been accepted for use on this project. **Table 1** includes a summary of the test methods being performed by the laboratories and the associated RDLs for the contaminants of concern for the June 2012 investigation. The MDLs have not been included in **Table 1** as all the RDLs are below the action limits established for the Site, with the exception of a few compounds. For those specific compounds identified, as the concentrations of Site contaminants approach the action limits, an evaluation of the need for alternative test methods that could achieve the necessary RDLs will be conducted.

Comparability is the extent to which data from one data set can be compared directly to similar or related data sets and/or decision-making standards. Data comparability will be achieved by continuity of laboratory practices, method analysis, sample collection procedures and sample handling. Any deviations from the procedures contained within this SAP shall be approved by the NHDES in advance, following concurrence with EPA.

Completeness is considered to be the percentage of planned data collection that has to be complete in order to be considered sufficient for the intended use. The goal is to achieve a minimum of 90 percent (%) data completeness for analyzed samples. At this time there are no samples that are considered critical.

## 2.0 PROJECT ORGANIZATION AND RESPONSIBILITIES

NHDES and EPA have entered into a Cooperative Agreement to implement the requirements of the September 30, 2005 ROD. NHDES serves as the lead State regulatory agency providing direct oversight for the remedial action at the Site. GZA has been retained by NHDES to provide remedial consulting services for the project.

Within GZA, Mr. Steven R. Lamb will be responsible for the overall contract management and ensuring that established protocols and procedures are adhered to. Mr. Michael Asselin will be responsible for the management of day-to-day activities, staff scheduling, and assuring that the technical objectives are achieved. Ms. Amy Doherty will be the designated Quality Assurance Officer for the project. In this role, Ms. Doherty will oversee all quality assurance (QA) aspects of the project including development of the SAP and data validation reports to confirm that data quality documentation is appropriate and that QA goals have been met.

The project organizational chart located in **Appendix A** illustrates the roles and responsibilities of those individuals involved in the project, and their different organizations related to the proposed investigation.

## 3.0 TASK DESCRIPTIONS - FIELD MONITORING AND SAMPLING PROTOCOL

The following subsections discuss general methodology for performing sampling and analysis as part of the overall field activities including specific sampling procedures and data management requirements that will be implemented during the investigation effort using LIF / geoprobe soil sampling and MIP / HPT / geoprobe groundwater sampling. Field activities will be conducted in accordance with this SAP, unless Site conditions require modifications. Any modifications shall be approved by NHDES in advance, following concurrence with EPA.

The laboratory analysis to be performed in support of this investigation has two goals:

- Contaminant characterization: VOCs, semivolatile organic compounds (SVOCs) (base neutrals); and
- Treatability characterization to provide information for evaluating the feasibility of remedial options in the future for LNAPL impacted soils: metals (iron [Fe], chromium [Cr], manganese [Mn] and selenium [Se]), Total Petroleum Hydrocarbon / diesel range [TPH / DRO], carbonate alkalinity, specific conductance, Oxidation Reduction Potential [ORP] and Chemical Oxygen Demand [COD].

It is important to maximize the time between the collection of the MIP / HPT scanning data, and the subsequent groundwater quality sample, to reduce the influence of the injection of water by the HTP tool. The planned order of field events are as follows (summary information is also presented in this section for each activity to help explain the interrelationships between the tasks. More detailed information follows this section.):

- Measurement of the LNAPL thickness in LNAPL monitoring wells near the interceptor trench area. The LNAPL level measurements will be an update on the LNAPL thickness trend data;

- Measurement of the depth to groundwater at select monitoring wells located in the former drum disposal area (TRY_MW-101; TRY_MW-205; TRY_MW-601S; TRY_MW-602S; TRY_MW-801; TRY_MW-802; TRY_MW-803; TRY_MW-804; and TRY_MW-805). The depth to groundwater information will be used to determine the depth of pilot borings being advanced using the sonic drill rig as discussed below;
- Completion of up to 20 pilot borings (10 pilot borings for LIF scanning and 10 pilot borings for MIP / HPT scanning). Prior geoprobe attempts in the former drum disposal area have not been successful due to the inability of the geoprobe to penetrate the buried liner material and the subsurface intervals of buried cloth material located above the groundwater table. A sonic drill rig will be used to advance pilot borings to within 3 feet above the estimated groundwater table depth at each subsurface investigation location. Upon completing each borehole, the drill cuttings (minus liner / cloth material) will be placed back in the borehole to provide proper casing support for subsequent geoprobe advancement, with the exception of the top 15 feet which will be filled with non-cement-based bentonite. Waste liner and cloth material will be drummed and removed from the Site. The purpose of the bentonite filling is to reseal the liner area in the event the liner was penetrated. Based on the anticipated pilot boring production rate, it is necessary to start drilling the pilot borings two days prior to beginning the geoprobe work in order to avoid incurring geoprobe standby time. The location of the initial pilot borings will be selected based on groundwater quality data from the June 2011 groundwater monitoring round and the LIF data obtained in September 2011;
- Perform MIP / HPT scanning of the groundwater at ten locations below the pilot boring depth (using a geoprobe modified with MIP / HPT sensors) in the general area of, and downgradient of, well TRY_MW-205 to assess VOC groundwater contamination which has been observed in the groundwater monitoring program. The MIP is a screening tool used to identify depths at which VOC contamination is detected. It performs continuous "measurements" of VOCs in subsurface groundwater / soils. The MIP "measurements" are relative indications of the presence of VOCs, not actual concentration measurements. Volatile chemicals adjacent to the probe diffuse across a heated membrane and are analyzed by detectors at ground surface. The MIP probe setup will also contain a HPT to evaluate the hydraulic behavior of subsurface soil. The HPT tool is advanced above the MIP sensor at a constant rate while water is injected through a screen on the side of the HPT tool (water is typically injected at a rate of less than 300 ml per minute). An inline pressure sensor measures the pressure response of the soil to the water injection. The pressure response indicates the relative ability of the soil to transmit water. Both the pressure and the flow rate are logged versus depth in real time. It is planned to perform the MIP / HPT investigation prior to the LIF investigation and perform groundwater sampling last to minimize the dilution effect of the water injected into the soil by the HPT tool. The real time data collected from the MIP / HPT tools will be used to determine which MIP locations will have groundwater sampling performed and to determine the depth of the groundwater sampling;
- Perform LIF scanning at 10 locations below the pilot boring depth (using a geoprobe modified with a LIF sensor) to identify the depth / thickness of LNAPL-impacted soil with the intent of identifying the LNAPL source area in the former drum disposal area. The LIF is used to delineate the depth and horizontal extent of free product and residual petroleum contamination. The fiber-optic-based fluorescence system is deployed with geoprobe equipment. LIF systems use a laser to send pulses of monochromatic light down a fiber optic line to a probe where the light is emitted and excites any polycyclic

aromatic hydrocarbon- (PAH-) containing compounds in the subsurface, causing them to fluoresce with a characteristic wavelength signature. The induced fluorescence from the PAHs is returned over a separate fiber optic line to the surface where it is quantified using a wavelength detector system. The peak wavelength and intensity provide information about the type of petroleum product or potential interferences. LIF scanning will start at the bottom of the pilot hole (after traveling down the pilot soil boring). The LIF scanning will be stopped 3 feet below where the LIF stops detecting LNAPL-impacted soil or if no LNAPL-impacted soil is detected, the LIF scanning will stop 5 feet below the groundwater table. The LIF field results will be used as they are generated to assist in locating additional LIF investigation locations where pilot soil borings will be needed. The LIF results will also be used to determine which LIF locations will have soil sampling performed and determine the depth of the soil sampling interval. The LIF signal response strength will indicate whether higher LNAPL concentrations are being encountered as the LNAPL is followed to a source (the signal strength increases with higher concentrations);

- In some instances, LIF scanning may be conducted in the pilot borings designated for MIP/HPT screening, prior to this screening being conducted, in order to maximize the use of the pilot borings in the vicinity of the LIF investigation;
- Perform soil sampling using a geoprobe. Soil samples may be taken prior to performing the LIF scan in the event that the soil type is expected to leave a void when the geoprobe tool is withdrawn. It is anticipated that a total of ten subsurface soil samples will be collected to further evaluate soil quality in the interceptor trench area and the former drum disposal area. Four of the soil samples are planned for the interceptor trench area (LIF locations A4, A8, A11 and A28, (see **Table 7** for initial guidance and **Figure 1**). Six additional samples are anticipated to be collected in the former drum disposal area (locations to be determined based on the planned LIF scanning results). Although the geoprobe sampling tube will be 4 feet long, the soil sampling interval of interest will be less as determined by the LIF data. For example, the soil sampling interval of interest at location A4 is 1.8 feet (see **Table 7**). See Section 3.1.6 for discussion on soil sample collection. The soil samples will be analyzed for VOCs, SVOCs (base neutral compounds), carbonate alkality, specific conductance, oxidation reduction potential (ORP), chemical oxygen demand (COD), total petroleum hydrocarbons (TPH) and metals (iron, chromium, manganese and selenium). The soil analytical data will be compared to Soil Remediation Standards included in Env-Or 600 and used to evaluate remedial options for the LNAPL contaminated soil;
- Install a PVC groundwater monitor well (1.5-inch diameter) at LIF location A28 (see **Figure 1**) in the interceptor trench area using the geoprobe rig. The purpose of installing a groundwater monitoring well at this location is to provide monitoring data on the quality of groundwater in advance of the discharge to the wetland from the LNAPL impacted soil. It will also serve as a sentry point to monitor whether free product is migrating into the wetland. The well will be developed as part of the June 2012 investigation field activities;
- Grouting the top 15 feet of the geoprobe holes used for the LIF scanning and MIP scanning (but not selected to be used for groundwater sampling);
- Perform overburden groundwater sampling using a geoprobe and a Wattera hand pump. It is anticipated that a total of five groundwater samples will be collected in the former drum disposal area using the MIP / HPT field data to determine sampling locations and

depth (see **Table 8** for initial guidance). It is anticipated that the MIP / HPT data will indicate the subsurface depth locations where the total VOC concentrations are the highest and the groundwater flow is most pronounced. See **Section 3.1.5** for discussion on groundwater sample collection. The groundwater analytical data will enhance the understanding of the groundwater contamination migrating from the area of well TRY_MW-205 and provide a basis for where to locate the proposed future overburden groundwater monitoring wells (and well screen depths) to monitor downgradient contamination migrating from the TRY_MW-205 area; and

- Grouting the top 15 feet of the geoprobe holes used for MIP/HTP scanning and for sampling the groundwater.

Note that specific field equipment required to complete a task, in addition to instrument calibration requirements, are included in GZA's standard operating procedures (SOPs) included in **Appendix B** and are referenced as appropriate below.

The following tables and figure refer to the sample types to be collected:

**Table 1** lists the analytical test methods, laboratory reporting detection limits, and regulatory action limits that pertain to the LIF based geoprobe soil sampling and the MIP based geoprobe groundwater sampling described by this SAP.

**Table 2** refers to the proposed locations to be sampled, their respective designations, media types, sampling frequency, parameters to be sampled, and the rationale for selecting the sampling location. The sampling locations designated by "SO-B#" or "GW-C#" are place holders reflecting the number of samples to be collected; however, the field results of the LIF and MIP / HPT investigations will determine which locations are actually sampled.

**Table 3** refers to specific analytical methods, sample volume, containers, preservatives, and hold time requirements for the groundwater and soil samples to be collected.

**Table 4** refers to monitoring well construction information, which includes well diameter, geologic unit the well is screened within, screen interval depth, etc. The well information is provided in this SAP as a reference tool for field staff working near a monitoring well during the June 2012 investigation.

**Table 5** refers to the specific quality control (QC) sampling requirements for the June 2012 investigation activities.

**Table 6** is a cross-reference table for groundwater samples that identifies the sampling locations and the specific parameters being analyzed at each location. The sampling locations designated by "SO-B#" or "GW-C#" are place holders reflecting the number of samples to be collected; however, the field results of the LIF and MIP / HPT investigations will determine which locations are actually sampled.

**Table 7** summarizes the proposed LNAPL soil sampling locations.

**Table 8** summarizes the proposed MIP/HPT groundwater sampling locations.

**Figure 1** illustrates proposed initial LIF and MIP / HPT scanning locations at the Site. The LIF and MIP / HPT scanning locations shown are tentative since the additional investigation locations will be based on field generated LIF and MIP / HPT real time field data.
Specific SOPs are included in **Appendix B** and referenced herein.

## 3.1 SAMPLE IDENTIFICATION

In order to properly transfer sample results into the NHDES EMD (Environmental Monitoring Database) samples must be identified using the designated NHDES station identification.

- All sample identifiers (IDs) must have "TRY_" as a prefix. This includes any samples going to outside labs so that later this data may be uploaded into the NHDES EMD;
- The sample ID has to be 15 characters or less, including the "TRY_";
- Equipment Blanks must be labeled "EQUIP BLANK." The equipment from which the equipment blank was collected will be documented in the field log book and indicated in the comments section of the chain-of-custody (COC) form;
- Trip Blanks must be labeled "Trip Blank" without any other designation. Only one Trip Blank per COC per cooler is acceptable.
- Sample duplicates are identified by adding "DUP" to the end of the station ID. The duplicate sample must be labeled "DUP" not "Dup" and there must be one space between the sample ID and DUP (example "TRY_MW-205 DUP"). Blind duplicates are not allowed. The space and "DUP" will not count toward the 15 character maximum; and
- All new sample IDs shall be approved by the NHDES Project Manager and the QA Coordinator in advance.

### 3.1.1 Specific Sample Identification

The soil sample ID format will be "TRY_SO-A#-depth" or "TRY_SO-B#-depth" where "A" is the LIF location ID in the interceptor trench area and "B" is the LIF location in the former drum disposal area. The depth refers to the midpoint of the targeted soil sample range, either a whole number or rounded to the nearest tenth. The depth of the sample will also be noted in the comments column on the COC. (e.g., TRY_SO-A11-25.5) It is acceptable to use one decimal point in the sample station ID.

The groundwater sample ID format will be similar; TRY_GW-C#-depth will be used for the MIP / HPT investigation locations. The depth refers to the midpoint of the geoprobe screened interval, either a whole number or rounded to the nearest tenth. The depth of the sample will also be noted in the comments column on the COC. (e.g., TRY_GW-C10-45.5). It is acceptable to use one decimal point in the sample station ID.

## 3.2 MULTI-MEDIA INVESTIGATION / SAMPLING AND ANALYSIS

Multi-media sampling at the Site consists of sampling of groundwater and subsurface soils (refer to **Tables 2, 7 and 8**) for the June 2012 investigation. GZA anticipates that referencing the current NHDES HWRB Master QAPP (RFA #08036) will adequately address regulatory concerns regarding the integrity of laboratory test methods and procedures.

The following samples shall be analyzed by the NHDPHS Laboratory in Concord, New Hampshire:

- Groundwater Samples
  - VOCs
  - SVOCs (base neutrals)
- Soil Samples
  - VOCs
  - Soil Total Metals (Fe, Cr, Se & Mn) (dry weight) and
  - Soil TPH/DRO (diesel range organics).

The following soil samples shall be analyzed by the ESS Laboratory (ESS) in Cranston, Rhode Island:

- SVOCs (base neutrals)
- Carbonate Alkalinity
- Specific Conductance
- ORP, and
- COD

GZA will be responsible for delivering samples to the NHDPHS and ESS laboratories. The GZA field team leader will coordinate sample pick-up/delivery arrangements with the NHDPHS and ESS laboratories directly. Samples going to the NHDPHS Laboratory will be transported under the NHDPHS COC. Samples going to the ESS Laboratory will be transported using an ESS COC. Refer to SOP L-15.

The laboratory turn-around time (TAT) requested for all samples will be the standard 10 to 15 business days TAT.

Calibration of the related field equipment (Hach turbidity meter and PID meter) will be performed in accordance with the specific equipment SOPs referenced later in the text. Decontamination of non-dedicated equipment (i.e., water level meters, and oil / water interface probe) will be completed in accordance with SOP L-14. Investigative Derived Waste generated from decontamination activities will be containerized and disposed of off-site, as appropriate. Purge water and soil cuttings not returned to the pilot borings will be discharged to the ground surface.

### 3.2.1 Water Level and LNAPL Thickness Measurements

GZA will obtain groundwater level measurements at the following monitoring wells (**Table 2)** in accordance with SOP L-1 to assess the depth of groundwater in the area of the former drum disposal area prior to subsurface investigation:

- TRY_MW-101;
- TRY_MW-205;
- TRY_MW-601S;
- TRY_MW-602S;
- TRY_MW-801;
- TRY_MW-802;
- TRY_MW-803;

- TRY_MW-804; and
- TRY_MW-805.

LNAPL thickness will be measured from the following monitoring wells (**Table 2)** in accordance with SOP L-1:

- TRY_MW-C1S;
- TRY_MW-C2S;
- TRY_MW-C3S;
- TRY_MW-C4S;
- TRY_MW-C5S;
- TRY_MW-C7S;
- TRY_MW-C8S;
- TRY_MW-201P; and
- TRY_MW-201S.

### 3.2.2 Pilot Borings

GZA will coordinate and observe Boart Longyear (BLY) in the advancement of pilot borings using a track-mounted rotosonic drill rig prior to conducting the geoprobe MIP / HTP study in accordance with SOP L-4. The rotosonic drilling method employs the use of high-frequency, resonant energy to advance a core barrel or casing into subsurface formations. Both the drill casing and interior sample barrel (lined with a polyethylene core sleeve to retain the collected samples) are typically advanced in 10-foot sections. Each polyethylene soil core sleeve (core sleeve) will be visually inspected and logged by a GZA field engineer in accordance with SOPs L-5 Burmister Classification System and L-6 Guide for Description of Soils.

PID screening for total VOCs will be performed in accordance with SOP L-3. In the event that VOCs are detected above background concentrations, soil samples will be collected from the core sleeves and analyzed for VOCs in accordance with SOP L-10 (except that the soil core sleeve will be already opened prior to the PID scanning).

The intent is to drill the pilot soil borings to within 3 feet of the groundwater table; however, in the event that fabric material is observed at this depth, it will be necessary to continue drilling through the fabric material so it does not impede the geoprobe work. If drilling below the fabric material results in the bottom of the pilot soil boring being below the groundwater table, the pilot soil boring will need to be re-drilled in a nearby location (location to be determined in the field).

After the core sleeves have been examined, the fabric materials will be removed from the cores and contained in a 55-gallon drum for proper disposal after the investigation. The remaining soil material will be returned to the borehole (prior to removing the casing) in the reverse order the cores were generated, with the exception of the top 15 feet, which will be filled with non-cement-based bentonite. The pilot borings will then be covered with plastic sheeting to prevent the introduction of precipitation into the boring and the bentonite. Excess soil material will be discarded on the ground surface proximate to the borehole location.

The MIP / HPT investigation locations will be marked in the field using survey paint and marked by a stake or flag. The investigation location ID will be marked on each stake or flag. The letter "B" followed by a number will be the ID used for the LIF investigation locations. The letter "C" followed by a number will be the ID used for the MIP / HPT investigation locations.

It is envisioned that an initial six pilot borings will be advanced at least two days prior to the start of the geoprobe work since the advancement of the pilot borings is anticipated to be slower than the geoprobe borings. Once the geoprobe work starts, the field data generated will provide information which will determine where the next pilot boring will be located. Up to 20 pilot borings (10 pilot borings for LIF scanning and 10 pilot soil borings for MIP / HPT scanning) are anticipated, but will be dependent upon the difficulty of the drilling conditions encountered. **Figure 1** illustrates the location of the initial MIP / HPT investigation locations (C1, C2, C3, C4, and C5) and the initial LIF investigation location (B2) in the former drum disposal area. Although it can't be determined until LIF and MIP/ HPT field data is available, it is possible that some of the pilot boring locations may be of interest for both LIF and MIP/HPT scanning, which would decrease the total number of pilot soil borings needed.

### 3.2.3 MIP / HPT Scanning for VOC Subsurface Contamination

GZA will coordinate and oversee the MIP / HPT scanning conducted by Colombia Technologies in accordance with SOP L-7 and SOP L-8. The location ID "C" represents the MIP / HPT investigations to be performed in the former drum disposal area.

**Figure 1** illustrates the location of the initial MIP / HPT investigation locations (C1, C2, C3, C4, and C5) in the former drum disposal area. The initial investigation locations are in the vicinity of wells TRY_MW-205 and TRY_MW-804 (which had the highest VOC or bis(2-ethylhexyl) phthalate concentrations) and downgradient of the wells. Bis(2-ethylhexyl)phthalate is also known as Di[2-ethylhexyl]phthalate (DEHP) (CAS Number # 117-81-7). GZA notes that this figure does not illustrate the additional "C" pilot soil borings that will be located based on the field MIP / HPT data. The MIP signal response readings indicating VOC contamination and HPT pressure response data indicating the relative ability of the soil to transmit groundwater will both be recorded at each location as the geoprobe advances with depth. Scanning will start at the bottom of the pilot boring, approximately 3 feet above the groundwater table.

Groundwater table fluctuations in the former drum disposal area (wells TRY_MW-205 and TRY_MW-602S) during the period November 2006 to June 2011 indicate that groundwater elevations have fluctuated between 5.3 feet (TRY_MW-205) and 7.21 feet (TRY_MW-602S). The groundwater table appears to be highest in the spring months (including June). The depth of the pilot soil borings will be based on stopping the drilling of the pilot soil boring approximately 3 feet above the groundwater table and starting the MIP / HPT at the bottom of the pilot boring. (This will ensure that the scanning starts above the groundwater table and also above any LNAPL-impacted soil if LNAPL was present in this area in the past.) The MIP / HPT probe will be lowered a minimum of 10 feet below the last detected VOC response signal at each MIP / HPT investigation location to determine if other preferred contaminant flow paths exist (unless bedrock is encountered based on well logs in the area). If no additional VOC response signals occur after 10 feet, the MIP / HPT scanning can be stopped. If no VOC response signals are observed at an investigation location, the MIP / HPT scanning can be stopped after 15 feet of scanning. The maximum MIP response signal strength will be recorded for each MIP / HPT

investigation location. The field-generated results will be used to determine the follow-on MIP / HPT investigation locations. A total of ten MIP / HPT investigation locations are anticipated in the former drum disposal area.

The MIP / HPT investigation locations will be remarked by a stake or flag if the marker was removed for the geoprobe work. The investigation location ID will be marked on each stake or flag. The distance of each investigation location will be physically measured from at least two physical reference points such as the closest monitoring wells or other MIP / HPT sampling locations. NHDES will take global positioning system (GPS) location readings of the MIP / HPT investigation locations after the investigation is done. The location information will be used to create a figure of the study area which will be drawn to scale.

Ground surface elevations of the MIP / HPT investigation locations will be measured by GZA after the investigation so that actual groundwater elevations can be determined.

#### 3.2.4 LIF Scanning of Subsurface LNAPL-Impacted Soil

GZA will coordinate and oversee the LIF scanning conducted by Colombia Technologies in accordance with SOP L-9. The LIF investigation location IDs will consist of a letter followed by a number. The letter symbols will represent the following:

- "A" represents the LIF LNAPL impacted soil investigation performed in the interceptor trench area performed in September 2011; and
- "B" represents the LIF LNAPL impacted soil investigation to be performed in the former drum disposal area. The "B" locations will be investigated in June 2012.

**Figure 1** illustrates the location of the initial LIF investigation location (B1) in the former drum disposal area, located upgradient of LIF location A-11 (which had the highest LIF signal response during the LIF investigation of the interceptor trench area). The figure does not show the additional "B" pilot soil borings that will be located based on the field LIF data, as their locations are currently undetermined. The vertical thickness of the LNAPL-impacted soil will be measured at each LIF investigation location by the LIF scanner. Scanning will start at the bottom of the pilot boring prepared for the LIF scanning activity which will be approximately 3 feet above the groundwater table.

Groundwater table fluctuations in the former drum disposal area as discussed above in **Section 3.1.3** apply to the LIF investigation in the former drum disposal area. The depth of the pilot soil borings will be based on stopping the drilling of the pilot soil boring approximately 3 feet above the groundwater table and starting the LIF at the bottom of the pilot boring. (This will ensure that the scanning starts above the impacted soil that would have been impacted by a seasonally high groundwater table with LNAPL.) The LIF probe will be lowered a minimum of 3 feet below the detected LNAPL-impacted soil at each LIF investigation location to confirm the thickness of the LNAPL-impacted soil. If no LIF response signals are observed at all at an investigation location, the LIF scanning can be stopped after 8 feet of scanning. The maximum LIF response signal strength will be recorded for each LIF investigation location. The field generated results will be used to determine the follow-on LIF investigation locations. A total of 10 LIF investigation locations are anticipated in the former drum disposal area.

The LIF investigation locations will be remarked by a stake or flag if the marker was removed for the geoprobe work. The investigation location ID will be marked on each stake or flag. The distance of each investigation location will be physically measured from at least two physical reference points such as the closest monitoring wells or previous LIF sampling locations. The same will be done with the existing LNAPL monitoring wells. NHDES will take GPS location readings of the LIF investigation locations after the LNAPL investigation is done. The location information will be used to create a figure of the study area which will be drawn to scale.

Ground surface elevations of the LIF investigation locations will be measured by GZA so that top of LNAPL elevation contour drawing can be created after the LIF investigation.

#### 3.2.5 Groundwater Sampling Procedures

GZA will coordinate and oversee the groundwater sampling conducted by Colombia Technologies in accordance with SOP L-11. The rationale for sampling groundwater is included in **Table 2**. The sampling locations designated by "GW-C#" are place-holders reflecting the number of samples to be collected; however, the field results of the MIP / HPT investigations will determine which locations are actually sampled. The locations and depths to be sampled will be the five highest MIP signal strengths, taking the HPT data into consideration, which will indicate the preferred contaminant groundwater pathways.

The MIP / HPT field data will indicate what the geoprobe groundwater sampling depth(s) should be at each of the selected groundwater sampling locations. Depending upon the MIP / HPT field findings, it is possible that multiple groundwater sampling depths at a location will be indicated by the field data in the event that the groundwater flow rates and MIP signal strengths vary by depth (this would indicate there is channeling of groundwater and contamination through higher flow channels).

Once the geoprobe casing is lowered to the desired sampling depth, the geoprobe well screen is exposed to the groundwater. Prior to installing the water level probe, dedicated polyethylene (Teflon lined) sample tubing with a stainless steel check valve is lowered through the geoprobe casing to the mid-point of the geoprobe well screen (Waterra sampling method). The depth to water is then measured (SOP L-1) by passing a water level meter probe through the geoprobe casing until groundwater is encountered.

Although the Waterra check valve is not recommended for sampling for VOCs (SOP L-11), this method is only being used as a screening tool and it is the only sampling device that will allow sampling with the real time field geoprobe approach given that the anticipated groundwater sampling depths are potentially greater than 27 feet.

No groundwater purging will be required when sampling groundwater using the geoprobe tooling.

See **Tables 2** and **6** for the list of groundwater analytical samples to be collected (VOCs and SVOCs (base neutrals)). Once the groundwater sampling is completed at each sampling location, remove the sample tubing and dispose of properly. The check valve should be saved and deconned for future use at the site. New tubing and a new check valve will be used at each groundwater sampling location. The groundwater sample ID format will be "TRY_GW-C#" where "C#" is the MIP / HPT location ID. The depth of the sampling will be noted in the comments column on the COC.

Groundwater turbidity will be measured in the field using the Hach 2100P meter just prior to taking the SVOC sample. Calibration of the Hach turbidity meter will be performed using SOP L-2.

VOCs will be sampled first, followed by the SVOCs at each groundwater sampling location. In the event that insufficient groundwater recharge occurs, the setup will be left to recharge. If there is insufficient recharge and the SVOC sample cannot be collected within a 24 hour period contact the GZA project manager who will confer with the NHDES project manager on how to proceed.

The groundwater level probe will also be removed and decontaminated using SOP L-14. The geoprobe casing and well screen will be removed and the geoprobe rig moved to the next sampling location (the geoprobe well screen is disposable and new well screens will be used at each sampling location). In the event that the next sampling location is a deeper depth at the same MIP / HPT investigation location, the geoprobe casing will be lowered to the deeper sampling depth with a new well screen, and new sample tubing and check valve will be used.

Refer to **Section 4.2** below and **Table 5** for all required QC sampling including equipment blanks, duplicate samples, etc., with respect to groundwater sampling.

#### 3.2.6 Subsurface Soil Sampling Procedures

Soil samples may be taken prior to performing the LIF scan in the event that the soil type is expected to leave a void when the geoprobe tool is withdrawn. GZA will coordinate and oversee the groundwater sampling conducted by GeoSearch, Inc., who is actually operating the geoprobe rig in accordance with SOP L-10 and SOP L-12. The rationale for sampling subsurface soils is included in **Table 2**. Four soil samples are planned for the "A" locations in the interceptor trench area (A4, A8. A11 and A28). Six soil samples are planned for the "B" locations in the former drum disposal area.

The sampling locations in **Table 2** designated by "SO-B#" are place-holders reflecting the number of samples to be collected: however, the field results of the LIF investigations will determine which locations are actually sampled. The locations and depths to be sampled will be the six highest LIF signal strengths observed in the former drum disposal area. The LIF field data will indicate what the geoprobe subsurface soil sampling depth(s) should be at each of the selected soil sampling locations.

The soil sample ID format will be "TRY_SO-A#-depth" or "TRY_SO-B#-depth" where "SO-A#" is the LIF location ID in the interceptor trench area and "SO-B" is the LIF location in the former drum disposal area. The depth of the sampling will also be noted in the comments column on the COC. The sampled soil will be contained in the 4-foot-long Teflon sleeve soil sampling tube. The outside of the Teflon soil sleeve will be marked by a non-VOC pen/marker as to the section of the sleeve that contains the thickness of soil indicated by the LIF to be impacted by LNAPL.

The VOC soil sample will be taken first. The location of the VOC soil sample will be determined by PID readings (SOP L-3) taken at various locations along the Teflon sleeve and determinations of the probable depth of impacted soil. To minimize the loss of VOCs, the PID soil readings will be taken through holes cut into the sleeve to allow the PID probe end to be inserted into the sleeve. The VOC soil sample will be taken at the location of the highest PID reading. To take the VOC sample, the Teflon sleeve will be cut open and sampled quickly to minimize the VOC

loss. The soil sample container for the SVOCs (base neutrals), carbonate alkalinity, specific conductance, ORP and COD is to be filled after the VOC container. The metals and TPH sample container is to be filled last. All soil sampling will be taken from the section of the sleeve which contains LNAPL-impacted soil according to the LIF scanning. In the event that insufficient LNAPL-impacted soil is available to fill all three soil sample containers, the order of sampling is still the same as discussed above and documentation will be made in field notes as to which samples were actually collected and which samples could not be collected due to insufficient soil sample volume.

Refer to **Section 4.2** below and **Table 5** for all required QC sampling, including equipment blanks, duplicate samples, etc., with respect to soil sampling.

### 3.3 OTHER PLANNED ACTIVITIES

Additional planned site activities to occur during the June 2012 investigation are:

- Grouting the top 15 feet of the geoprobe holes after they have been utilized; and
- Install a PVC groundwater monitoring well (1.5-inch diameter) at LIF location A28 (see **Figure 1**) in the interceptor trench area using the geoprobe rigging accordance with SOP L-12. The maximum LIF response signal was observed at 8 feet bgs. The proposed pre-packed well screen length is 5 feet long with approximately two feet of screen below the groundwater table level. The depth of the well will be approximately 10 feet bgs. The well will not be sampled until the next site monitoring round. The well will be developed as part of the June 2012 investigation following SOP L-13.

## 4.0 QUALITY CONTROL

The following describes the QC steps used to demonstrate reliability and confidence in the monitoring data collected for this project and includes field equipment maintenance and calibration, field QC sample collection, and data verification and validation.

### 4.1 EQUIPMENT MAINTENANCE AND CALIBRATION

The following tables provide the preventive maintenance steps for the typical equipment anticipated for the types of monitoring and sampling activities addressed by this SAP to ensure proper functioning of field equipment and references the relevant SOPs for the project. Manufacturer's equipment manuals and any manufacturer-provided repair kits will be on-site at all times. Calibration procedures are included in the Appendix referenced below. In addition, all instruments requiring calibration will be calibrated in the GZA office before field activities commence to ensure all of the correct standards are available and that equipment is working properly.

**Field Equipment - Preventive Maintenance**

| INSTRUMENT | ACTIVITY | FREQUENCY | SOP REFERENCE |
|---|---|---|---|
| Photoionization Detector TEI Model 580B | Calibration and Calibration Check – pre-sampling event | Once - Prior to Sampling Event | L-3 |
| | Battery check<br>Calibration check – beginning of day<br>Calibration, if needed – after morning calibration check<br>Calibration check – end of day | Daily | |
| Electronic Water Level Indicator | Battery Check | Daily | L-1 |
| Geotech Oil-Water Interface Probe | Battery Check | Daily | L-1 |
| Hach 2100 P Turbidity Meter | Calibration and Calibration Check – pre-sampling event | Once - Prior to Sampling Event | L-2 |
| | Battery check<br>Calibration check – beginning of day<br>Calibration, if needed – after morning calibration check<br>Calibration check – end of day | Daily | |

Note: In the case of field equipment failure, backup equipment will be delivered to the Site from GZA's Manchester, New Hampshire office. The Hach meter is suitable to use on this project as it can meet the calibration requirements included in SOP L-2. *Every reasonable effort shall be made to ensure the instruments are shielded from the elements.*

The following table provides performance requirements of applicable field equipment; required corrective actions should equipment fail; and references to relevant SOPs for the project.

**Field Equipment - Calibration and Corrective Action**

| Instrument | Calibration Frequency[1] | Calibration Standards | Acceptance Criteria for Daily Calibration Checks[2] | Corrective Action | SOP Reference |
|---|---|---|---|---|---|
| Photoionization Detector<br>TEI Model 580B | Daily Calibration Check at the beginning of each day<br><br>Calibration if PID reading is not within range during the calibration check<br><br>Calibration check at the end of the day | Connect detector to isobutylene-in-air standard. After 15 seconds, the detector reading should equal the response value as indicated on the calibration gas cylinder used. | +/- 15 % | **Morning Calibration Check–** If outside the criteria during the morning check, recalibrate. If recalibration is unsuccessful, replace the unit.<br>**End of the day Calibration Check –** If outside the criteria at the end of the day, the data will be qualified by GZA. | L-3 |

| Instrument | Calibration Frequency/1 | Calibration Standards | Acceptance Criteria for Daily Calibration Checks/2 | Corrective Action | SOP Reference |
|---|---|---|---|---|---|
| **Hach 2100P** Turbidity Meter | Daily Calibration Check at the beginning of each day<br><br>Calibration if turbidity is not within range during the calibration check<br><br>Calibration Check at the end of the day | Calibrate to <0.1, 20, 100, and 800 NTUs and use 20 NTUs to check<br>(use StablCal Formazin Primary Turbidity Standards) | +/- 5 % | **Morning Calibration Check** – If outside the criteria during the morning check, calibrate the instrument. If still out of range, replace the appropriate calibration standards and recalibrate /check. If recalibration is unsuccessful, replace the unit.<br>**End of the day Calibration Check –** If outside the criteria at the end of the day, the data will be qualified by GZA. | L-2 |

Note: 1 Each instrument requiring calibration by GZA must be calibrated in the office prior to field event to ensure the equipment can meet the QA criteria.
2 The morning and end-of-the-day checks are a check of the instrument against the calibration standards and is in "measurement" mode. This is not recalibration but rather a check.

Quality Assurance information for the LIF, MIP and the HPT scanning equipment is discussed in the following SOPs:

- MIP scanning equipment – SOP L-7;
- HPT scanning equipment – SOP L-8; and
- LIF scanning equipment – SOP L-9.

The MIP cannot be calibrated in the field; however, the system is checked with a response test and performance test before being used.

In general, all instrumentation necessary for field monitoring and health and safety purposes shall be maintained, tested, and inspected according to the manufacturer's instructions.

**All field instruments shall be calibrated, and have a calibration check, in the office prior to the field event (within one week) to ensure that the equipment is working properly and meets the QA criteria.**

Calibration checks, made in the run mode, shall be performed at the beginning of each sampling day to ensure the equipment is in calibration and again at the end of the day of use to ensure that the instruments have remained in calibration throughout the day. If the beginning of the day check is unsuccessful for any parameter, that parameter must be calibrated and the calibration must be checked again. If the end of the day check is unsuccessful for any parameter, the data collected for that parameter shall be qualified in its use.

In addition, should any erratic or illogical readings occur between calibrations, the instrument shall be recalibrated in order to ensure that representative measurements are obtained. All calibration and check values shall be documented on the calibration log maintained by each user. Refer to the Calibration of Hach and PID Field Instruments SOP L-2 and SOP L-3 in **Appendix B** for specific calibration procedures.

## 4.2 FIELD QUALITY CONTROL

The following provides a general description of the field QC sampling that will occur for the project. Refer to **Table 5** that includes a summary of QC samples to be collected.

**Field Quality Control Requirements**

| QC Sample | Frequency | Acceptance Criteria | Corrective Action |
|---|---|---|---|
| **Duplicate** | One duplicate per batch 20 samples; per matrix; per parameter with a minimum of one duplicate per matrix, per parameter. | Duplicate concentrations are within +/- 30% for aqueous samples and 50% for solid samples | Flag in project report |
| **VOC Trip Blank** (separate trip blanks required for aqueous and solid VOCs) | One per cooler containing VOC samples | No contaminants are detected | Flag in project reports |
| **Equipment Blank** | • If dedicated equipment used, an initial equipment blank is required. No additional equipment blanks are required (refer to **Table 5**).<br>• If non-dedicated equipment (other than the water level meter and oil water interface probe) is used, once per sampling event during equipment use duration; per equipment type (refer to **Table 5**).<br>• Specific to the water level meter and oil / water interface probe – one equipment blank will be collected per sampling event after use in well TRY_MW-201S which contains LNAPL and is worst case and after decontamination. (refer to **Table 5**). | No contaminants are detected | Flag in project reports |

Notes:

- Duplicate samples are not intended to be blind duplicate samples. They will be designated with a "DUP" after the well designation (i.e., TRY_GW-C2-45 DUP).
- Trip blanks will be prepared by the NHDPHS laboratory and maintained at all times with the sample containers. The trip blank(s) will be designated "TRIP BLANK."
- Equipment blank samples will be designated as "EQUIP BLANK." Note that a comment is required on the COC indicating what the equipment blank is for (i.e., water level meter / oil water interface probe blank, etc.). See **Table 5**.

## 4.3 DATA VERIFICATION AND VALIDATION

Data review, which includes a GZA in-house examination to ensure data have been recorded, transmitted, and processed correctly, and data verification, which includes the evaluation of completeness, correctness, and conformance / compliance of a specific data set will be performed by GZA's Senior Project Manager at the end of each sampling event.

Field water quality data collected / measured will be reviewed in the field by the on-site GZA QA Officer daily for all matrices. Review will generally consist of the following: 1) review of calibration data and end of the day check; and 2) review of raw data and field notes for outliers or inconsistencies that may indicate a problem with the equipment or sampling procedure.

All laboratory data generated by the New Hampshire Division of Public Health Services (NHDPHS) and/or its subcontract laboratory will be reviewed by NHDPHS personnel and will not require third-party validation.

NHDPHS Lab will evaluate Field Quality Control samples for all samples analyzed by the NHDPHS Lab and will flag any data that does not meet the acceptance criteria under Field Quality Control Requirements listed in **Section 4.2** above.

The NHDPHS laboratory report will consist of the following:

- Data Qualifier Description Page;
- Sample Summary Page: includes lab IDs, Corresponding Client Sample IDs, Matrix, Date/Time Collected and Date Received;
- Analytical Report Comments and Qualifiers Page; and
- Analytical Results Pages: Method Citation, results, units, RDL, prep date, analyzed date, CAS# Regulatory Limit if applicable and Qualifier Code.
- Lab QC Data.

GZA notes that groundwater sample data results for non-inorganic compounds using the Waterra sampling methodology will be flagged as estimated.

Analytical data reports generated by ESS will consist of the following:

- Data Completeness;
- Preservation and Technical Holding Times;
- Blanks;
- Surrogate Compounds;
- Matrix Spike (MS)/Matrix Spike Duplicates (MSD);
- Field Duplicates;
- Laboratory Control Sample; and
- Compound Quantitation.

## 4.4 QUALITY ASSURANCE FIELD AUDITS

GZA QA field audits shall be conducted by the GZA QA Officer during monitoring events and will include observation of all sampling-related activities including equipment calibration, multi-media sampling, QC sampling, and decontamination activities to ensure that all procedures and techniques are conducted in accordance with this SAP and the current HWRB QAPP.

Field audits will be performed during the sampling round as scheduled by NHDES and EPA. Additional field audits will be conducted as necessary (e.g., if the field team is changed or the SOPs for the project change significantly). If corrective action is needed, additional field audits will be conducted to ensure all procedures and techniques used at the Site are conducted in accordance with this SAP and the HWRB's QAPP.

The results of the GZA field audit which result in corrective actions will be reported to the NHDES project manager and the NHDES QA Coordinator verbally and noted in the field log book. Audit findings and corrective actions will be discussed with the NHDES project manager and the NHDES QA Coordinator to resolve the findings and corrective actions to the satisfaction of NHDES.

# 5.0 DOCUMENTATION

## 5.1 FIELD DATA MANAGEMENT

In accordance with HWRB's Master QAPP, field personnel shall use field logbooks and/or pre-printed field worksheets to accurately document all field activities: on-site conditions; field measurements; sample collection information; field instrument and calibration information; and other pertinent site-related information during monitoring activities. All information shall be recorded in permanent black ink.

A permanently-bound field logbook (per person) with individually numbered pages is maintained for field sampling information not recorded on field forms (calibration sheets, low flow purge forms, COCs, etc.). All entries into the field logbook are made with permanent black ink, and corrections are made using a single line through the error with the initials and date of the individual who made the correction. The unused bottom portion of each page shall be lined-out, initialed, and dated. The field notes in general shall include a description of field conditions that includes, as a minimum:

- Site location;
- Date, start, and finish times of the work and weather conditions;
- Name and initials of person making entry;
- Names of other personnel present, if any;
- Names of visitors, if any;
- Purpose and summary of proposed work effort;
- Details of any deviation from the field operations plan or standard operating procedures, including who authorized the deviation;

- Field observations;
- Location, description and unique identifier for all photographs taken in association with the field activity; and
- Any other pertinent information.

Field forms to be completed in the field during the June 2012 investigation consists of the daily calibration form for the Hach turbidity meter, water level measurement form, LNAPL thickness measurement form and the Waterra sampling worksheet. Refer to the appropriate SOP for a copy of the individual field form and the specific information required for the form.

GZA's Project Manager will be responsible for ensuring that the field files are entered into the project record. Information recorded in other Site documents other than the field logbooks (e.g., sampling logs, calibration sheets, COCs) will not be repeated in logbooks except in summary form, as necessary.

## 5.2 CHAIN-OF-CUSTODY PROCEDURES

Samples shall remain in the sample collector's view at all times, unless locked in a vehicle or other secure place in accordance with SOP L-13. It is the sampler's responsibility to ensure that the samples are not tampered with prior to their delivery to the analytical lab. The GZA QA Officer will review the COCs at the end of each day to ensure all data has been entered properly. The COC form shall be completed to provide documentation tracing sample possession and handling from the time of collection through delivery to the analytical lab, and shall accompany the samples at all times. The COC is a legal document that may be used for litigation purposes.

## 5.3 TECHNICAL PROJECT REPORT

The NHDPHS and ESS laboratories will provide the analytical data reports along with a copy of the pertinent QC data. All field logs, field forms, etc., will be provided by GZA's Project Manager. GZA will prepare project technical report to document the June 2012 investigation work. The specific scope of technical reports will be determined by NHDES; however, we anticipate that the report will include the following:

- Summary of sampling activities;
- Copies of all field sampling sheets/forms and appropriate field logbook pages;
- A list of equipment used, including make and models (and serial number if available);
- All calibration information including calibration standards used lots numbers, expiration dates, calibration checks etc.;
- A copy of the laboratory reports and applicable data validation reports;
- A copy of Columbia Technologies' data report;
- Data summary tables of the compounds detected at each sampling location, highlighting any compounds that exceed cleanup goals;
- Data summary tables showing the history of the compounds detected at each sampling location, highlighting any compounds that exceed cleanup goals with graphs of the same;
- A table of the groundwater levels and elevations at each well, including past data;

- Site map;
- Isoconcentration Contour Maps for Site COCs if there is sufficient data;
- Recommendations for any follow-on actions such as investigation of data gaps or the next phase of work; and
- QA/QC information (refer to **Section 5.3.1** below).

As part of the reporting, Columbia Technologies will provide its "Real Time Visualization Package," which includes:

- Real time data delivery in 2D/3D via a secure website immediately upon processing in the field. All 2D/3D visualizations are available on a secure website for up to one year after the field event;
- Final report upon completion of generating the field sensing data within five business days. The Columbia Technology final report will include client-selected 2D/3D high resolution graphics; and
- An interactive internet webinar to discuss and review the direct sensing data and the 2D/3D visualizations.

### 5.3.1 Quality Assurance/Quality Control Section of Report

The technical report will include general statements summarizing whether or not the quality control criteria in this SAP and HWRB's QAPP were met in the field and in the laboratory. The report will include a discussion of any QA/QC problems and how they were resolved. GZA will note anything unusual that is anticipated to affect the quality or usability of the data.

Examples for situations where the QA criteria were not met which would be included within the technical report:

- How does that affect the usability of the data?
- Can we use the data? If not, why not?
- Was any corrective action needed and what, if any, measures were taken?
- What changes are recommended for the future?

Examples of possible issues to be included within a technical report:

- Were contaminants found in the equipment blanks?
- Were any samples broken in transport to the lab?
- Did the lab report any difficulties, issues?
- Were the sample tags mixed-up in the field if the results look abnormal?

# TABLES

**TABLE 1 - SUMMARY OF ANALYTICAL TEST METHODS AND LABORATORY REPORTING LIMITS / DETECTION LIMITS AND REGULATORY ACTION LIMITS**

Troy Mills Landfill Superfund Site

Troy, New Hampshire

| Test Methods / Analytes | GROUNDWATER Laboratory Reporting Detection Limits (RDLs) | Ambient Groundwater Quality Standards (AGQS) | ROD Interim Groundwater Cleanup Levels |
|---|---|---|---|
| **Samples Analyzed by NHDPHS Laboratory** | | | |
| **VOCs by EPA Method 8260B (ug/L)** | | | |
| *Vinyl Chloride* | 2 | 2 | 2 |
| *cis-1,2-Dichloroethene* | 2 | 100 | 70 |
| *2-Butanone(MEK)* | 10 | 4,000 | 170 |
| *Tetrahydrofuran (THF)* | 10 | 154 | 154 |
| *Benzene* | 2 | 5 | 5 |
| *Trichloroethene* | 2 | 5 | 5 |
| *Toluene* | 2 | 1,000 | 1000 |
| *Tetrachloroethene* | 2 | 5 | 5 |
| *n-Propylbenzene* | 2 | 260 | 50 |
| *1,3,5-Trimethylbenzene* | 2 | 330 | 50 |
| *1,2,4-Trimethylbenzene* | 2 | 330 | 50 |
| *p-Isopropyltoluene* | 2 | 260 | 50 |
| *n-Butylbenzene* | 2 | 260 | 50 |
| *Naphthalene* | 2 | 20 | 20 |
| | | | |
| **SVOCs by EPA Method 8270C (ug/L) (base neutral)** | | | |
| *Naphthalene* | 10 | 20 | 20 |
| *Bis-(2-ethylhexyl)phthalate* | 5 | 6 | 6 |
| *Benzo(b)fluoranthene* | 10 | 0.05 | 0.05 |
| *Benzo(a)pyrene* | 10 | 0.20 | 0.2 |
| *Dibenzo(a,h)anthracene* | 10 | 0.01 | 0.01 |
| | | | |
| | | | |

*Notes:*

1. All other RDL information was provided by NHDPHS laboratory.
2. "---" indicates no standard was available for the analyte.
3. Blue Shaded cells indicate those parameters for which the laboratory can't achieve the action limit for an analyte.

**TABLE 1 - SUMMARY OF ANALYTICAL TEST METHODS AND LABORATORY REPORTING LIMITS / DETECTION LIMITS AND REGULATORY ACTION LIMITS**

Troy Mills Landfill Superfund Site

Troy, New Hampshire

| Test Methods / Analytes | SOIL Laboratory Reporting Detection Limits (RDLs) | Soil Remediation Standards Env-Or 600 (Dry Weight) (mg/kg) |
|---|---|---|
| **Samples Analyzed by NHDPHS Laboratory** | | |
| **VOCs by EPA Method 8260B (ug/kg wet)** | | |
| *Vinyl Chloride* | 100 | 1 |
| *cis-1,2-Dichloroethene* | 100 | 2 |
| *2-Butanone(MEK)* | 500 | 51 |
| *Tetrahydrofuran (THF)* | 500 | 200 |
| *Benzene* | 100 | 0.3 |
| *Trichloroethene* | 100 | 0.8 |
| *Toluene* | 100 | 100 |
| *Tetrachloroethene* | 100 | 2 |
| *n-Propylbenzene* | 100 | 85 |
| *1,3,5-Trimethylbenzene* | 100 | 96 |
| *1,2,4-Trimethylbenzene* | 100 | 130 |
| *p-Isopropyltoluene* | 100 | 3,400 |
| *n-Butylbenzene* | 100 | 110 |
| *Naphthalene* | 100 | 5 |
| | | |
| **Metals by EPA Method 200.7/200.8 (mg/kg wet)** | | |
| *Chromium* | 1.25 | 1,000 |
| *Selenium* | 1.25 | 180 |
| *Mercury (245.1)* | 0.04 | 6 |
| *Iron* | 12.5 | NA |
| *Manganese* | 2.5 | 6 |
| | | |
| **TPH / DRO by Method 8015 (mg/kg wet)** | 25 | 10,000 |
| | | |
| **Samples Analyzed by ESS Laboratory** | | |
| **SVOCs by EPA Method 8270C (mg/kg wet) (base neutral)** | | |
| *Naphthalene* | 0.333 | 5,000 |
| *Bis(2-ethylhexyl)phthalate* | 0.333 | --- |
| *Benzo(b)fluoranthene* | 0.333 | 700 |
| *Benzo(a)pyrene* | 0.167 | 700 |
| *Dibenzo(a,h)anthracene* | 0.167 | 700 |
| | | |
| **Carbonate Alkalinity by Method SM2320B** | NA | NA |
| | | |
| **Specific Conductance by Method 120.1** | NA | NA |
| | | |
| **ORP by SM 2580** | NA | NA |
| | | |
| **COD by Method 410.4** | NA | NA |

*Notes:*

1. "---" indicates no information available for that compound.
2. RDL Information for Semivolatile Organic Compounds (SVOCs), Total Petroleum Hydrocarbon/diesel range (TPH / DRO), Carbonate Alkalinity, Oxidation Reduction Potential (ORP) and Chemical Oxygen Demand (COD) was provided by ESS Laboratory. VOC and Metals RDL information was provided by NHDPHS laboratory.
3. Laboratory reporting in dry weight for all subsurface soil data results.
4. NA indicates not applicable to this analysis.

**TABLE 2 - MULTI-MEDIA SAMPLING PLAN**
Spring 2012 Soil and Groundwater Investigation
Troy Mills Landfill Superfund Site
Troy, New Hampshire

| SAMPLE LOCATION AND DESIGNATION | MEDIA TYPE | WELL TYPE | SAMPLE METHOD | SAMPLING FREQUENCY | PARAMETERS | SAMPLING RATIONALE |
|---|---|---|---|---|---|---|
| **Wells With Water Level Measurements Only** | | | | | | |
| TRY_MW-101 | Groundwater | Overburden | Electronic Water Level Meter | Spring 2012 | Wells to be Monitored for Water Level Only in Spring 2012 Investigation | Groundwater Elevation Data to Estimate Depth of Sonic Pilot Borings |
| TRY_MW-205 | | Overburden | | | | |
| TRY_MW-601S | | Overburden | | | | |
| TRY_MW-602S | | Overburden | | | | |
| TRY_MW-801 | | Overburden | | | | |
| TRY_MW-802 | | Overburden | | | | |
| TRY_MW-803 | | Overburden | | | | |
| TRY_MW-804 | | Overburden | | | | |
| TRY_MW-805 | | Overburden | | | | |
| **Wells With Product Thickness Measurements Only** | | | | | | |
| TRY_MW-C1S | Groundwater | Overburden | Oil / Water Interface Probe | Spring 2012 | No analytical samples collected. Product thickness measurements only | Monitor LNAPL Thickness |
| TRY_MW-C2S | | Overburden | | | | |
| TRY_MW-C3S | | Overburden | | | | |
| TRY_MW-C4S | | Overburden | | | | |
| TRY_MW-C5S | | Overburden | | | | |
| TRY_MW-C7S | | Overburden | | | | |
| TRY_MW-C8S | | Overburden | | | | |
| TRY_MW-201S | | Overburden | | | | |
| TRY_MW-201P | | Overburden | | | | |
| **Geoprobe Locations to be Sampled for Groundwater in Spring 2012 Investigation** | | | | | | |
| TRY_GW-C2-"depth" (45 feet bgs) = TRY_GW-C2-45 | Groundwater (Sampling "C#" locations are preliminary. Final decision to be made in field based on MIP / HPT data.) Depth mid point of screened area | Overburden | Check Valve / Teflon Lined Tubing | Spring 2012 | VOCs and SVOCs (base neutrals), and field groundwater turbidity | Investigate groundwater concentrations in downgradient and near well TRY_MW-205. |
| TRY_GW-C5-45 (45 feet bgs) | | Overburden | | | | |
| TRY_GW-C7-45 (45 feet bgs) | | | | | | |
| TRY_GW-C10-45 (45 feet bgs) | | Overburden | | | | |
| TRY_GW-C10-55 (55 feet bgs) | | Overburden | | | | |
| **Geoprobe Locations to be Sampled for Subsurface Soil** | | | | | | |
| TRY_SO-A4-"depth" | Soil (Sampling "B-#" locations are preliminary. Final decision to be made in field based on LIF data.) The depth equals the mid point of the soil sampling range. | Overburden | Geoprobe Sleeve / Grab | Spring 2012 | SVOC (base neutrals), carbonate alkalinity, specific conductance, ORP, COD, Metals (Fe, Cr, Mn, Se), VOCs, TPH. | Investigate LNAPL impacted soil near the collection trench area. The LIF signal strengh observed was in the middle of the signal ranges observed in the investigation of the trench area. |
| TRY_SO-A8-"depth" | | Overburden | | | | Investigate LNAPL impacted soil near the collection trench area. The LIF signal strengh observed was the low end of the signal ranges observed in the investigation of the trench area. |
| TRY_SO-A11-"depth" | | Overburden | | | | Investigate LNAPL impacted soil near the collection trench area. The LIF signal strength observed at A11 was the highest of the trench area locations. |
| TRY_SO-A28-"depth" | | Overburden | | | | Investigate LNAPL impacted soil adjacent to the wetland. |
| TRY_SO-B1-"depth" | | Overburden | | | | Investigate LNAPL soil in the former drum burial area. |
| TRY_SO-B3-"depth" | | Overburden | | | | Investigate LNAPL soil in the former drum burial area. |
| TRY_SO-B5-"depth" | | Overburden | | | | Investigate LNAPL soil in the former drum burial area. |
| TRY_SO-B7-"depth" | | Overburden | | | | Investigate LNAPL soil in the former drum burial area. |
| TRY_SO-B9-"depth" | | Overburden | | | | Investigate LNAPL soil in the former drum burial area. |
| TRY_SO-B10-"depth" | | Overburden | | | | Investigate LNAPL soil in the former drum burial area. |

Notes:

1. "VOCs" (groundwater and soil) consist of the New Hampshire Department of Environmental Services (NHDES) full list of volatile organic compounds analyzed by EPA Method 8260B.
2. "SVOCs" (groundwater analysis) consist of semi-volatile organic compounds analyzed by EPA Method 8270C, only base neutral-extractables.
3. For groundwater (GW-C) and soil (SO-A or SO-B) samples the depth refers to the midpoint of the groundwater screened area or the midpoint of the soil sample range, either a whole number or rounded to the nearest tenth. It is permissible to use one decimal point if needed. Example: TRY_SO-A28-23.5
4. Refer to **Table 6** - Groundwater Sampling Cross-Reference Table for a summary of individual parameters being sampled for at each well location.
5. Refer to **Table 7** for proposed LNAPL soil sampling locations and **Table 8** for the proposed MIP/HPT groundwater sampling locations.

**TABLE 3 –MEDIA, ANALYSIS, TEST METHODS, CONTAINERS/ SAMPLE VOLUME, PRESERVATION, AND HOLD TIME**

Spring 2012 Investigation

Troy Mills Landfill Superfund Site, Troy New Hampshire

| PARAMETER | MATRIX | NUMBER OF SAMPLES (including field QC[1 and 2]) | ANALYTICAL METHOD | SAP SOP / ASTM[3] | CONTAINERS (size and type) | PRESERVATION REQUIREMENTS[4] | MAXIMUM HOLDING TIME |
|---|---|---|---|---|---|---|---|
| **SAMPLES ANALYZED BY THE ESS LAB** | | | | | | | |
| **SUBSURFACE SOIL** | | | | | | | |
| SVOCs (base neutrals) | Soil (solid sample) | 10 field samples; 1 duplicate; 2 equipment blanks (See separate section below) | 8270C (base neutrals), | ASTM D 6282 | 1- 4 oz. glass | SVOCs - 4°C +/-2°C | 14 days to extract, 40 days to analyze |
| Carbonate Alkalinity | | 10 field samples; 1 duplicate | SM 2320B | | | Alkalinity - 4°C +/-2°C | 14 days |
| Specific Conductance | | 10 field samples; 1 duplicate | Method 120.1 | | | Conductance - 4°C +/-2°C | 28 days |
| ORP | | 10 field samples; 1 duplicate | SM 2580 | | | ORP - 4°C +/-2°C | **24 hrs** |
| COD | | 10 field samples; 1 duplicate | Method 410.4 | | | COD - 4°C +/-2°C | 28 days |
| **SAMPLES ANALYZED BY THE NHDPHS LAB** | | | | | | | |
| **GROUNDWATER** | | | | | | | |
| VOCs | Groundwater | 5 field samples; 1 duplicate; 2 equipment blanks (see separate section below); trip blanks | 8260B | L-15/ ASTM D 6001 | 3- 40 mL VOA[1] | HCl, 4°C +/-2°C | 14 days |
| SVOCs (base neutrals) | | 5 field samples; 1 duplicate; 2 equipment blanks (see separate section below); 1 MS/MSD | 8270C (base / neutrals), | L-15 / ASTM D 6001 | 2 - 1L Amber | 4°C +/-2°C | 7 days to extract, 40 days to analyze |
| | | ***SVOC Note: For every 10 groundwater samples, the lab requires four 1-liter SVOC sample bottles be collected for QA. A minimum of one set per sampling event.*** | | | | | |
| **SUBSURFACE SOIL** | | | | | | | |
| VOCs (dry weight determined in metals sample) | Soil (solid sample) | 10 field samples; 1 duplicate; 2 equipment blank (see separate section below) | 8260B | ASTM D 6282 | 1- 40 mL glass VOA | Methanol, 4°C +/-2°C (minimum 5 ml methanol per 5 grams of soil) | 14 days |
| Total Metals (Fe, Cr, Se & Mn) (dry weight) | | 10 field samples; 1 duplicate; 2 equipment blanks (Mn only - see separate section below) | 200.7, 200.8, | ASTM D 6282 | 1- 4 oz. glass | 4°C +/-2°C | 6 months |
| TPH/DRO (diesel range organics). | | 10 field samples; 1 duplicate | Method 8015 | ASTM D 6282 | | | 14 days to extract, 40 days to analyze |

**TABLE 3 –MEDIA, ANALYSIS, TEST METHODS, CONTAINERS/ SAMPLE VOLUME, PRESERVATION, AND HOLD TIME**

Spring 2012 Investigation

Troy Mills Landfill Superfund Site, Troy New Hampshire

| PARAMETER | MATRIX | NUMBER OF SAMPLES (including field QC/1 and 2) | ANALYTICAL METHOD | SAP SOP/3 | CONTAINERS (size and type) | PRESERVATION REQUIREMENTS/4 | MAXIMUM HOLDING TIME |
|---|---|---|---|---|---|---|---|
| **SAMPLES ANALYZED BY THE NHDPHS LAB** | | | | | | | |
| **DI WATER – TOTAL NUMBER OF EQUIPMENT BLANKS** | | | | | | | |
| VOCs | DI Water | 4 equipment blanks, trip blank | 8260B | n/a | 3- 40 mL VOA | HCl, 4°C +/-2°C | 14 days |
| SVOCs (base / neutrals) | | 4 equipment blanks | 8270C (base / neutrals) | n/a | 2 - 1L Amber | 4°C +/-2°C | 7 days to extract, 40 days to analyze |
| Total Mn | | 3 equipment blanks | 200.7 | n/a | 1- 500 mL plastic | $HNO_3$, 4°C +/-2°C | 6 months |

Notes:

1. Trip blanks will be included with each cooler containing VOC samples. Trip blanks will include HCL-preserved blanks for aqueous VOC samples (2 VOA Vials), and methanol preserved blanks for solid samples (1 VOA Vial) as needed. There will be one temperature blank per cooler.
2. Refer specifically to **Table 5** for equipment blank details as well as other QC sampling requirements. If non-dedicated sampling equipment is used, one equipment blank per sampling event will be required. All equipment blanks will be analyzed by the NHDPHS lab.
3. The sampling SOP or ASTM is referenced for the appropriate media.
4. Note that the pH requirement for parameters requiring acidification is less than 2.
5. Refer to **Table 6** - Groundwater Sampling Cross-Reference Table for a summary of individual parameters being sampled for at each location.
6. "n/a" indicates that there is no standard operating procedure associated with collection of the DI water equipment blank. The laboratory provided DI water is decanted directly from the original container to the appropriate sample containers in most to least volatile sample bottle order.

**TABLE 4 - WELL CONSTRUCTION INFORMATION**
Spring 2012 Investigation
Troy Mills Landfill
Troy, New Hampshire

| Monitoring Well Designation | Well Type (2-in, 1.5-in etc) | Reference Measuring Point | Height of Stickup of Measuring Point (ft) | Bladder Pump Model | Bladder Length in feet (L) / Diameter in inches (D) / & Capacity in mg/L (C) | Screened Geologic Unit | Screen Interval (ft, referenced to measuring point) | Depth to Well Bottom* (ft, referenced to measuring point) | Historic Low Water Level (ft, referenced to measuring point) | Recommended Depth of Bladder Pump Intake (ft, referenced to measuring point) | Pump Intake Distance from Top of Screen (ft, referenced to measuring point) | Distance Between Pump Intake and Bottom of Well (ft, referenced to measuring point) |
|---|---|---|---|---|---|---|---|---|---|---|---|---|
| **Wells With Water Level Measurements Only** | | | | | | | | | | | | |
| TRY_P-1 | 2-in PVC | PVC | 1.74 | --- | --- | Overburden | --- | 16.82 | 13.67 | --- | --- | --- |
| TRY_M-3 | 1 1/2-in PVC | PVC | 0.95 | --- | --- | Overburden | 7.5-31.4 | 31.4 | 6.8 | 14.5 | 7.0 | 16.9 |
| TRY_M-5 | 1 1/2-in PVC | PVC | 2.25 | --- | --- | Bedrock | --- | 22.4 | 16.5 | --- | --- | --- |
| TRY_M-6 | 2-in PVC | Casing | 1.99 | --- | --- | Overburden | --- | 17.33 | 10.6 | --- | --- | --- |
| TRY_M-7D | 1 1/2-in PVC | PVC | 1.49 | --- | --- | Deep Bedrock | 50.8-80.8 | 81.36 | 6.1 | 74.0 | 23.2 | 6.8 |
| TRY_MW-108 | 1 1/2-in PVC | Casing | 3.25 | --- | --- | Deep Bedrock | 84.3-134.3** | 142.35 | 36.02 | Obstruction in Well | --- | --- |
| TRY_MW-201D | 2-in PVC | PVC | 1.98 | --- | --- | Overburden | --- | 54.76 | 10.68 | --- | --- | --- |
| TRY_MW-202S | 2-in PVC | PVC | 1.64 | --- | --- | Overburden | 6.6 to 13.6 | 14.13 | 11.18 | --- | --- | --- |
| TRY_MW-202D | 2-in PVC | Casing | 1.84 | --- | --- | Overburden | --- | 65.23 | 10.43 | --- | --- | --- |
| TRY_MW-502 | 2-in PVC | PVC | 2.47 | --- | --- | Overburden | --- | 18.6 | 15.13 | --- | --- | --- |
| TRY_MW-504 | 2-in PVC | PVC | 2.50 | --- | --- | Overburden | --- | 11.85 | 7.51 | --- | --- | --- |
| TRY_MW-505 | 2-in PVC | PVC | 2.56 | --- | --- | Overburden | 6.6-16.6** | 16.78 | 7.81 | --- | --- | --- |
| TRY_MW-506 | 2-in PVC | PVC | 3.19 | --- | --- | Overburden | --- | 17.32 | 13.24 | --- | --- | --- |
| TRY_MW-507 | 2-in PVC | PVC | 2.74 | --- | --- | Overburden | 8-13** | 13.04 | 9.15 | --- | --- | --- |
| TRY_MW-603 | 2-in PVC | PVC | 2.16 | --- | --- | Bedrock | 5.2-15.2** | 15.7 | 9.22 | --- | --- | --- |
| **Wells With LNAPL Thickness Measurements Only** | | | | | | | | | | | | |
| TRY_MW-C1S | 2-in PVC | PVC | 3.27 | --- | --- | Overburden | 5.0-15.0 | 15.0 | --- | --- | --- | --- |
| TRY_MW-C2S | 2-in PVC | PVC | 1.75 | --- | --- | Overburden | 7.2-17.2 | 17.2 | --- | --- | --- | --- |
| TRY_MW-C3S | 2-in PVC | PVC | 3.1 | --- | --- | Overburden | 7.8-17.8 | 17.8 | --- | --- | --- | --- |
| TRY_MW-C4S | 2-in PVC | PVC | 2.64 | --- | --- | Overburden | 6.7-16.7 | 16.7 | --- | --- | --- | --- |
| TRY_MW-C5S | 2-in PVC | PVC | 3 | --- | --- | Overburden | 5.0-15.0 | 15.0 | --- | --- | --- | --- |
| TRY_MW-C6S | 2-in PVC | PVC | 1.79 | --- | --- | Overburden | 5.2-15.2 | 15.2 | --- | --- | --- | --- |
| TRY_MW-C7S | 2-in PVC | PVC | 2.03 | --- | --- | Overburden | 5.0-15.0 | 15.0 | --- | --- | --- | --- |
| TRY_MW-C8S | 2-in PVC | PVC | 2.48 | --- | --- | Overburden | 8.1-18.1 | 18.1 | --- | --- | --- | --- |
| TRY_MW-201S | 1 1/2-in PVC | PVC | 2.24 | --- | --- | Overburden | 8.2-18.2 | 18.2 | --- | --- | --- | --- |
| **Wells Currently Sampled That Have Screen Lengths Greater than 10 feet** | | | | | | | | | | | | |
| TRY_M-1 | 1 1/2-in PVC | PVC | 0.64 | QED T1300 | 3.8-ft L, 1-in D, 220-mL C | Overburden | 8.3-67.3** | 67.3** | 8.76 | 55.0 | 46.7 | 12.3 |
| TRY_M-2 | 1 1/2-in PVC | PVC | 0.75 | QED T1300 | 3.8-ft L, 1-in D, 220-mL C | Overburden | 7.5-43.9 | 43.9 | 5.54 | 16.5 | 9.0 | 27.4 |
| TRY_MW-101 | 1 1/2-in PVC | Casing | 1.18 | QED T1300 | 3.8-ft L, 1-in D, 220-mL C | Predominantly Overburden | 32-82 | 82 | 29.81 | 50.0 | 18.0 | 32.0 |
| TRY_MW-102 | 2-in PVC | Casing | 2.89 | QED Sample Pro | 1.2-ft L, 1.75 in D, 100-mL C | Predominantly Overburden | 21.2-36.2** | 36.2** | 23.65 | 34.0 | 13.0 | 2.2 |
| TRY_MW-104S | 2-in PVC | PVC | 2.17 | QED T1250 | 1.2-ft L, 1.5-in D, 100-mL C | Overburden | 5-17**/6 | 17.7**/6 | 4.20 | 15.5 | 10.5 | 1.5 |
| TRY_MW-104D | 2-in PVC | PVC | 2.48 | QED T1250 | 1.2-ft L, 1.5-in D, 100-mL C | Overburden | 37.1-52.1** | 52.1** | 4.18 | 48.0 | 10.9 | 4.1 |
| TRY_MW-105S | 2-in PVC | PVC | --- | QED Sample Pro | 1.2-ft L, 1.75 in D, 100-mL C | Overburden | 6.5-19.5** | 21.08 | 10.96 | 17.5 | 11.0 | 3.6 |
| TRY_MW-105D | 2-in PVC | PVC | 1.89 | QED Sample Pro | 1.2-ft L, 1.75 in D, 100-mL C | Deep Bedrock | 48.5-88.2** | 87.92 | 11.52 | 68.0 | 19.5 | 20.2 |
| TRY_MW-201P | 4-in PVC | Casing | 2.07 | QED Sample Pro | 1.2-ft L, 1.75 in D, 100-mL C | Overburden | 6.5-56.5** | 53.7 | 8.02 | 26.5 | 20.0 | 30.0 |
| TRY_MW-202P | 4-in PVC | PVC | 1.96 | QED Sample Pro | 1.2-ft L, 1.75 in D, 100-mL C | Overburden | 4.9-59.9** | 61.55 | 9.97 | 52.5 | 47.6 | 7.4 |
| TRY_MW-601S | 2-in PVC | PVC | 2.69 | QED T1250 | 1.2-ft L, 1.5-in D, 100-mL C | Overburden | 14.3-29.3 | 29.3 | 21.57 | 27.8 | 13.5 | 1.5 |
| TRY_MW-602S | 2-in PVC | PVC | 2.30 | QED T1250 | 1.2-ft L, 1.5-in D, 100-mL C | Overburden | 21-36 | 36 | 24.22 | 34.4 | 13.4 | 1.6 |
| TRY_MW-701 | 2-in PVC | PVC | 3.18 | QED T1250 | 1.2-ft L, 1.5-in D, 100-mL C | Deep Bedrock | 18.3-78.3 | 78.3 | 10.70 | 48.3 | 30.0 | 30.0 |
| TRY_MW-702D | 2-in PVC | PVC | 2.44 | QED Sample Pro | 1.2-ft L, 1.75 in D, 100-mL C | Deep Bedrock | 19.4-46.4**/6 | 46.4**/6 | 6.51 | 33.0 | 13.6 | 13.4 |

**TABLE 4 - WELL CONSTRUCTION INFORMATION**
Spring 2012 Investigation
Troy Mills Landfill
Troy, New Hampshire

| **Monitoring Well Designation** | **Well Type (2-in, 1.5-in etc)** | **Reference Measuring Point** | **Height of Stickup of Measuring Point** (ft) | **Bladder Pump Model** | **Bladder Length in feet (L) / Diameter in inches (D) / & Capacity in mg/L (C)** | **Screened Geologic Unit** | **Screen Interval** (ft, referenced to measuring point) | **Depth to Well Bottom*** (ft, referenced to measuring point) | **Historic Low Water Level** (ft, referenced to measuring point) | **Recommended Depth of Bladder Pump Intake** (ft, referenced to measuring point) | **Pump Intake Distance from Top of Screen** (ft, referenced to measuring point) | **Distance Between Pump Intake and Bottom of Well** (ft, referenced to measuring point) |
|---|---|---|---|---|---|---|---|---|---|---|---|---|
| **Wells Currently Sampled With Screen Lengths Equal to or Less than 10 feet** | | | | | | | | | | | | |
| TRY_M-7 | 1 1/2-in PVC | PVC | 1.61 | QED T1300 | 3.8-ft L, 1-in D, 220-mL C | Overburden | 7.8-17.3 | 17.3 | 8.71 | 15.8 | 8.0 | 1.5 |
| TRY_MW-201M | 1 1/2-in PVC | PVC | 2.81 | QED T1300 | 3.8-ft L, 1-in D, 220-mL C | Overburden | 26.6-36.6 | 36.6 | 10.50 | 34.6 | 8.0 | 2.0 |
| TRY_MW-204 | 2-in PVC | PVC | 2.6 | QED T1250 | 1.2-ft L, 1.5-in D, 100-mL C | Overburden | 22.8-32.8 | 32.8 | 20.69 | 31.3 | 8.5 | 1.5 |
| TRY_MW-205 | 2-in PVC | PVC | 2.07 | QED T1250 | 1.2-ft L, 1.5-in D, 100-mL C | Overburden | 29.1-39.1 | 39.1 | 31.06 | 37.6 | 8.5 | 1.5 |
| TRY_MW-301X | 2-in PVC | PVC | 2.42 | QED Sample Pro | 1.2-ft L, 1.75 in D, 100-mL C | Overburden | 42.5-52.5 | 52.5 | --- | 47.5 | 5.0 | 5.0 |
| TRY_MW-501X | 2-in PVC | PVC | 2.02 | QED Sample Pro | 1.2-ft L, 1.75 in D, 100-mL C | Overburden | 2.0-12.0 | 12.02 | --- | 7.0 | 5.0 | 5.0 |
| TRY_MW-508X | 2-in PVC | PVC | 2.9 | QED Sample Pro | 1.2-ft L, 1.75 in D, 100-mL C | Overburden | 4.7-9.7 | 9.7 | --- | 7.2 | 2.5 | 2.5 |
| TRY_MW-601D | 2-in PVC | PVC | 2.23 | QED T1250 | 1.2-ft L, 1.5-in D, 100-mL C | Overburden | 52.1-62.1 | 62.1 | 22.81 | 57.1 | 5.0 | 5.0 |
| TRY_MW-602B | 2-in PVC | PVC | 2.12 | QED T1250 | 1.2-ft L, 1.5-in D, 100-mL C | Bedrock | 37.5-47.5 | 47.5 | 20.61 | 42.5 | 5.0 | 5.0 |
| TRY_MW-702SX | 2-in PVC | PVC | 3.9 | QED Sample Pro | 1.2-ft L, 1.75 in D, 100-mL C | Overburden | 5.4-15.4 | 15.4 | --- | 10.4 | 5.0 | 5.0 |
| TRY_MW-801 | 2-in PVC | PVC | 2.25 | QED Sample Pro | 1.2-ft L, 1.75 in D, 100-mL C | Overburden | 36.4-46.4 | 46.4 | --- | 41.4 | 5.0 | 5.0 |
| TRY_MW-802 | 2-in PVC | PVC | 2.1 | QED Sample Pro | 1.2-ft L, 1.75 in D, 100-mL C | Overburden | 25.6-35.6 | 35.6 | --- | 30.6 | 5.0 | 5.0 |
| TRY_MW-803 | 2-in PVC | PVC | 2.15 | QED Sample Pro | 1.2-ft L, 1.75 in D, 100-mL C | Overburden | 22.3-32.3 | 32.3 | --- | 27.3 | 5.0 | 5.0 |
| TRY_MW-804 | 2-in PVC | PVC | 2.32 | QED Sample Pro | 1.2-ft L, 1.75 in D, 100-mL C | Overburden | 26.0-36.0 | 36.0 | --- | 31.0 | 5.0 | 5.0 |
| TRY_MW-805 | 2-in PVC | PVC | 2.37 | QED Sample Pro | 1.2-ft L, 1.75 in D, 100-mL C | Overburden | 32.4-42.4 | 42.4 | --- | 29.4 | 5.0 | 5.0 |

Notes:
1. "ft bgs" indicates depth in feet below ground surface.
2. "**" indicates downhole information was not verified during the October 8, 2008 camera survey.
3. Historic "low" water level is based on water level data compiled from December 2006, May and December 2007 and June/July 2009 water level measurements. The historic low water level refers to the lowest recorded water level measurement through 2009. "-" indicates that data was not obtained.
5. "---" = GZA included every known monitoring point within the above table. The information for numerous locations have been left blank as GZA does not have the data for those monitoring locations.
6. GZA notes that there appears to be a minor discrepancy between the historical information regarding the bottom of screen/well and that which was measured in July 2008 by GZA in two wells (TRY_MW-702D TRY_MW-104S). Both sets of information are included in this table.
7. The distance between pump intake and bottom of the well is calculated using the Depth to Well Bottom information.
8. "*" Depth to Well Bottom are field measured unless otherwise noted.

**TABLE 5 – SUMMARY OF QUALITY ASSURANCE SAMPLES TO BE COLLECTED**
Spring 2012 Investigation
Troy Mills Landfill Superfund Site
Troy, New Hampshire

| SAMPLING MEDIA | SAMPLING FREQUENCY | ASSOCIATED SAMPLING EQUIPMENT | SAMPLE ID | DESIGNATED NOTE TO BE USED ON CHAIN-OF-CUSTODY | ANALYSES |
|---|---|---|---|---|---|
| **EQUIPMENT BLANK SAMPLES** | | | | | |
| Groundwater (collected after TRY_MW-201S) | Spring 2012 | Oil-Water Interface Probe | EQUIP BLANK | "Oil /Water Probe" | VOCs, SVOCs (base / neutrals), Total Mn |
| Groundwater (collected from check valve and Teflon lined tubing prior to sampling) | Spring 2012 | Stainless Steel Check Valve | EQUIP BLANK | "Check Valve" | VOCs, SVOCs (base / neutrals) |
| Soil (collected after sampling/decon) | Spring 2012 | Soil sampling tools (i.e. bowl/spoon) used to collect soil samples | EQUIP BLANK | "Spoon / Bowl" | VOCs, SVOCs (base / neutrals), Total Mn |
| Soil (collected prior to sampling) | Spring 2012 | Soil collection sleeve used in geoprobe soil sampling | EQUIP BLANK | "Geoprobe Sleeve" | VOCs, SVOCs (base / neutrals), Total Mn |
| **DUPLICATE SAMPLES** | | | | | |
| Groundwater | Spring 2012 | Check valve and Teflon lined tubing. | TRY_GW-C#-"depth" DUP (Selected in the field) | *N/A* | VOCs & SVOCs (base / neutrals) |
| Soil | Spring 2012 | Soil sampling tools (i.e. bowl/spoon) used to collect soil samples & soil collection sleeve used in geoprobe soil sampling | TRY_SO-A11 DUP | *N/A* | VOCs, SVOCs (base / neutrals), Total Metals (Fe, Cr, Se & Mn), TPH, carbonate alkalinity, specific conductance, ORP & COD |
| **LABORATORY MS/MSD SAMPLES** | | | | | |
| Groundwater | Spring 2012 | *N/A* | TRY_GW-C#-"depth" (selected in the field) | "MS/MSD" | SVOCs (base / neutrals) |
| **TRIP BLANK/TEMPERATURE BLANK SAMPLES** | | | | | |
| Aqueous VOCs (1 trip blank per cooler with aqueous VOCs samples only | Spring 2012 | *N/A* | TRIP BLANK | *N/A* | VOCs |
| Solid VOCs (1 trip blank per cooler with solid VOC samples only) | Spring 2012 | *N/A* | TRIP BLANK | *N/A* | VOCs |
| Temperature Blank (1 per cooler. Check off box on COC to indicate *that a temperature blank has been included in the cooler)* | Spring 2012 | *N/A* | TEMP BLANK | *N/A* | Temperature |

Notes*:*
1. "VOCs" consist of the New Hampshire Department of Environmental Services (NHDES) full list of volatile organic compounds analyzed by EPA Method 8260B.
2. "SVOCs" consist of semi-volatile organic compounds analyzed by EPA Method 8270C, only base/neutral-extractables.
3. Refer to **Table 6** - Groundwater Sampling Cross-Reference Table for a summary of individual parameters being sampled for at each well location.
4. Refer to **Table 7** for proposed LNAPL soil sampling locations and **Table 8** for the proposed MIP/HPT groundwater sampling locations.

**TABLE 6 - GROUNDWATER AND SOIL SAMPLING CROSS-REFERENCE TABLE**
Spring 2012 Investigation
Troy Mills Landfill Superfund Site
Troy, New Hampshire

| Location ID | Sampling Methodology (refer to Table 3) | QC Sampling (refer to Table 5) | Parameters to Be Sampled (refer to Table 2) | Groundwater / LNAPL Measurements |
|---|---|---|---|---|
| **SOIL** | | | | **I. Groundwater levels to be measured at:** TRY_MW-101; TRY_MW-205; TRY_MW-601S; TRY_MW-602S; TRY_MW-801; TRY_MW-802; TRY_MW-803; TRY_MW-804; and TRY_MW-805.<br><br>**II. LNAPL levels are to be measured at:** TRY_MW-C1S; TRY_MW-C2S; TRY_MW-C3S; TRY_MW-C4S; TRY_MW-C5S; TRY_MW-C7S; TRY_MW-C8S; TRY_MW-201P; and TRY_MW-201S. |
| TRY_SO-A4-"depth" | Geoprobe Sleeve | | VOCs; SVOCs (base neutrals); carbonate alkalinity; specific conductance; ORP; COD; Metals (Fe, Cr, Mn, Se); TPH | |
| TRY_SO-A8-"depth" | | | | |
| TRY_SO-A11-"depth" | | Duplicate | | |
| TRY_SO-A28-"depth" | | | | |
| TRY_SO-B1-"depth" | | | | |
| TRY_SO-B3-"depth" | | | | |
| TRY_SO-B5-"depth" | | | | |
| TRY_SO-B7-"depth" | | | | |
| TRY_SO-B9-"depth" | | | | |
| TRY_SO-B10-"depth" | | | | |
| **GROUNDWATER** | | | | |
| TRY_GW-C2-"depth" 45 feet bgs) = TRY_GW-C2-45 | Check Valve | | VOCs; SVOCs (base neutrals) | |
| TRY_GW-C5-45 (45 feet bgs) | | MS/MSD (SVOCs only) Actual location of MS/MSD to be determined in the field | | |
| TRY_GW-C7-45 (45 feet bgs) | | Duplicate Actual location of duplicate to be determined in the field | | |
| TRY_GW-C10-45 (45 feet bgs) | | | | |
| TRY_GW-C10-55 (55 feet bgs) | | | | |

Notes:
1. **Location IDs shown for "SO-B#" and "GW-C#" are place holders since the actual location to be sampled will be determined in the field based on the LIF and MIP / HPT field data. Refer to Table 7 for proposed LNAPL soil sampling locations and Table 8 for the proposed MIP/HPT groundwater sampling locations.**
2. "VOCs" consist of the New Hampshire Department of Environmental Services (NHDES) full list of volatile organic compounds analyzed by EPA Method 8260B.
3. "SVOCs" for groundwater analysis consist of semi-volatile organic compounds analyzed by EPA Method 8270C, only base neutral-extractables.
4. For groundwater (GW-C) samples the depth refers to the midpoint of the screened area and soil (SO-A or SO-B) samples the depth refers to the midpoint of the soil sample range. Use either a whole number or rounded to the nearest tenth. It is permissible to use one decimal point if needed. Example: TRY_SO-A28-23.5

**TABLE 7 - PROPOSED LNAPL SOIL SAMPLING LOCATIONS**
Troy Mills Landfill Superfund Site
Troy, New Hampshire
May 2012

| LIF Investigation Location (See Figure X) | LNAPL Impact Detected ? (Yes or No) | Impacted Soil Depth (Feet below ground surface) | Top of Impacted Soil (Elevation) | Impacted Soil Thickness (Feet) | LIF Max Response Signal (Percent) | Length of Sampling Tube (ft) |
|---|---|---|---|---|---|---|
| **LNAPL Trench Area** | | | | | | |
| A1 | No | --- | --- | --- | 5.2 | NS |
| A2 | No | --- | --- | --- | 1.5 | NS |
| A3 | No | --- | --- | --- | 1.5 | NS |
| A4 | Yes | 5.2 – 7 ft | 1040.36 | 1.8 ft | 26.4 | 4 ft |
| A5 | Yes | 5.8 – 6.4 ft | 1040.18 | 0.6 ft | 5.2 | NS |
| A6 | No | --- | --- | --- | 1.5 | NS |
| A7 | No | --- | --- | --- | 1.4 | NS |
| A8 | Yes | 5.4 – 7.1 ft | 1042.36 | 1.7 ft | 5.8 | 4 ft |
| A9 | Yes | 11 – 12.2 ft | 1042.31 | 1.2 ft | 6.2 | NS |
| A10 | No | --- | --- | --- | 2.6 | NS |
| A11 | Yes | 11.5 – 14.4 ft | 1045.37 | 2.9 ft | 52.8 | 4 ft |
| A12 | Yes | 14.4 – 14.7 ft | 1044.23 | 0.3 ft | 8.4 | NS |
| A13 | Yes | 12.1 – 13.4 ft | 1043.56 | 1.3 ft | 28.1 | NS |
| A14 | Yes | 13.6 – 13.9 ft | 1042.14 | 0.3 ft | 9.1 | NS |
| A15 | Yes | 6.2 – 6.5 ft | 1044.37 | 0.3 ft | 10 | NS |
| A16 | Yes | 5.5 – 6.2 ft | 1042.20 | 0.7 ft | 12.9 | NS |
| A17 | Yes | 6.4 – 6.7 ft | 1040.79 | 0.3 ft | 29.8 | NS |
| A18 | No | --- | --- | --- | 2.6 | NS |
| A19 | Yes | 6.1 – 6.4 ft | 1039.98 | 0.3 ft | 6.3 | NS |
| A20 | No | --- | --- | --- | 1.8 | NS |
| A21 | Yes | 7.2 – 7.5 ft | 1039.71 | 0.3 ft | 9.5 | NS |
| A22 | Yes | 6.2 – 6.5 ft | 1041.11 | 0.3 ft | 6.6 | NS |
| A23 | No | --- | --- | --- | 1.5 | NS |
| A24 | No | --- | --- | --- | 3.1 | NS |
| A25 | No | --- | --- | --- | 1.8 | NS |
| A26 | No | --- | --- | --- | 3.2 | NS |
| A27 | Yes | 7.8 – 8.7 ft | 1045.19 | 0.9 ft | 3.9 | 4 ft |
| A28 | Yes | 7.8 – 8.3 ft | 1040.65 | 0.5 ft | 28 | 4 ft |
| A29 | Yes | 6.5 – 6.8 ft | 1043.67 | 0.3 ft | 5.9 | NS |
| A30 | No | --- | --- | --- | 2.5 | NS |
| A31 | No | --- | --- | --- | 3.1 | NS |
| Confirm – A Series | Yes | 7 – 10 ft | 1040.53 | 3 ft | 11.3 | 4 ft |

**TABLE 7 - PROPOSED LNAPL SOIL SAMPLING LOCATIONS**
Troy Mills Landfill Superfund Site
Troy, New Hampshire
May 2012

| LIF Investigation Location (See Figure X) | LNAPL Impact Detected ? (Yes or No) | Impacted Soil Depth (Feet below ground surface) | Top of Impacted Soil (Elevation) | Impacted Soil Thickness (Feet) | LIF Max Response Signal (Percent) | Length of Sampling Tube (ft) |
|---|---|---|---|---|---|---|
| **Former Drum Burial Area** | | | | | | |
| B1 | | Estimated 30 – 33 ft | | 3 | TBD | 4 ft |
| B2 | | Estimated 30 – 33 ft | | 3 | TBD | NS |
| B3 | | Estimated 30 – 33 ft | | 3 | TBD | 4 ft |
| B4 | | Estimated 30 – 33 ft | | 3 | TBD | NS |
| B5 | | Estimated 30 – 33 ft | | 3 | TBD | 4 ft |
| B6 | | Estimated 30 – 33 ft | | 3 | TBD | NS |
| B7 | | Estimated 30 – 33 ft | | 3 | TBD | 4 ft |
| B8 | | Estimated 30 – 33 ft | | 3 | TBD | NS |
| B9 | | Estimated 30 – 33 ft | | 3 | TBD | 4 ft |
| B10 | | Estimated 30 – 33 ft | | 3 | TBD | 4 ft |

NOTES:
1.& TBD – To Be Determined.
2.& NS – Not Sampled.
3.& Locations for geoprobe soil sampling are highlighted in yellow. Sampling locations are subject to field decisions based on LIF data.

**TABLE 8 - PROPOSED MIP GROUNDWATER SAMPLING LOCATIONS**
Troy Mills Landfill Superfund Site
Troy, New Hampshire
May 2012

| MIP Investigation Location | MIP Screen Depth Estimated Interval (below ground surface) | Estimated Geoprobe Groundwater Sampling Depth #1 (below ground surface) | Estimated Geoprobe Groundwater Sampling Depth #2 (below ground surface) |
|---|---|---|---|
| Former Drum Burial Area | | | |
| C1 | 30 to 55 ft | NS | NS |
| C2 | 30 to 55 ft | 45 ft | NS |
| C3 | 30 to 55 ft | NS | NS |
| C4 | 30 to 55 ft | NS | NS |
| C5 | 30 to 55 ft | 45 ft | NS |
| C6 | 30 to 55 ft | NS | NS |
| C7 | 30 to 55 ft | 45 ft | NS |
| C8 | 30 to 55 ft | NS | NS |
| C9 | 30 to 70 ft | NS | NS |
| C10 | 30 to 70 ft | 45 ft | 55 ft |

NOTES:
1.& NS – Not Sampled.
2.& Locations to be sampled are highlighted in yellow. Sampling locations subject to field decisions based on MIP / HPT data.

**FIGURE**

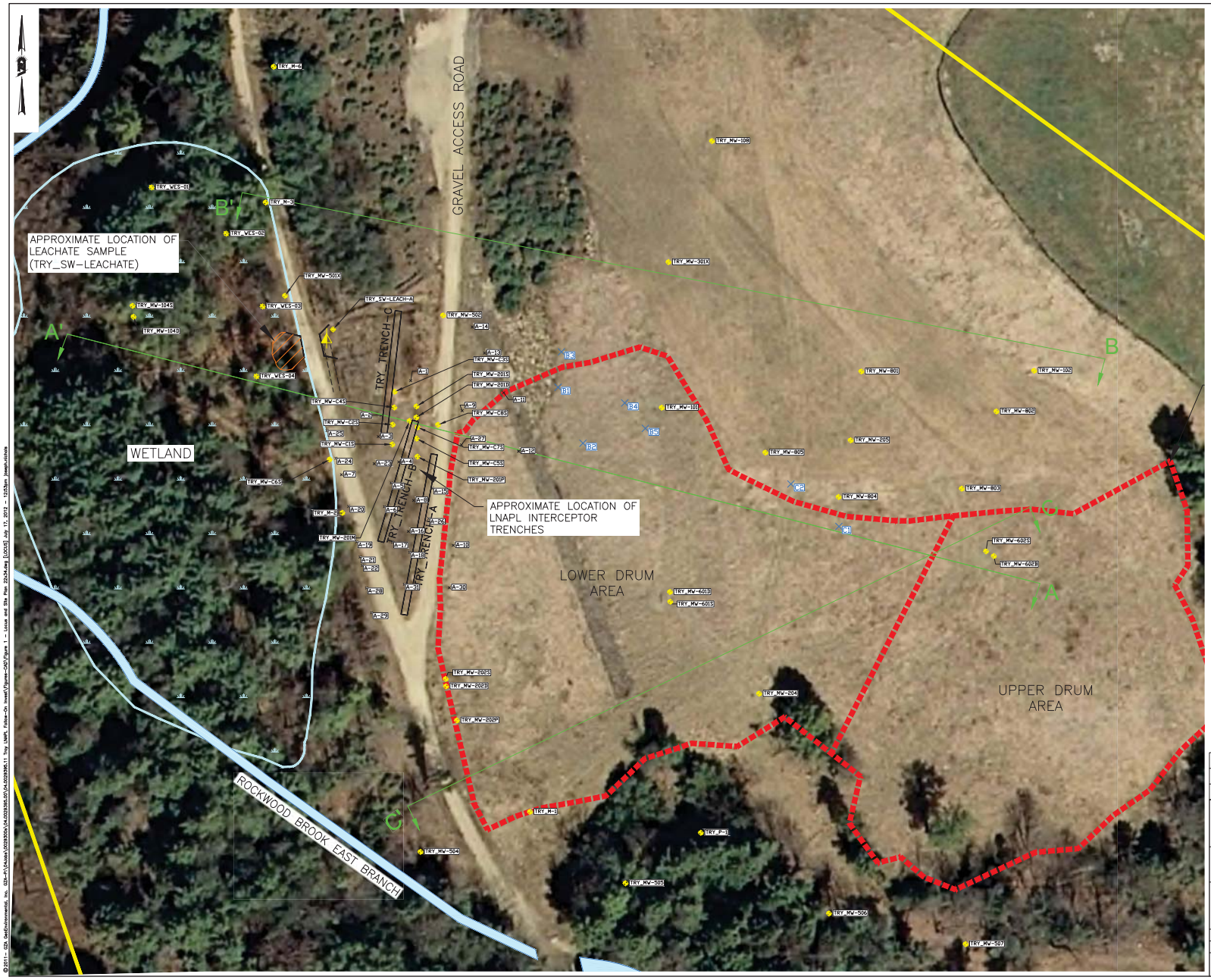


NOTES:

1. BASE PLAN IS FROM FIGURE SATELLITE PHOTO AND NHDES GPS DATA POINTS TAKEN ON SEPTEMBER 29, 2011.
2. THE GROUNDWATER MANAGEMENT ZONE (GMZ)/ACTIVITY AND USE RESTRICTION (AUR) LINE IS FROM "GROUNDWATER MANAGEMENT ZONE & ACTIVITY AND USE RESTRICTION PLAN, TROY MILLS LANDFILL, TROY, NEW HAMPSHIRE", PREPARED BY TF MORAN, INC., DATED DECEMBER 18, 2006, REVISED JANUARY 17, 2007 AND MARCH 19, 2007.
3. UPPER AND LOWER DRUM AREAS, AND SURROUNDING AREAS WERE COVERED BY CLEAN FILL AND GRADED BY EPA.

LEGEND

- GMZ/AUR BOUNDARY
- SURFACE WATER
- TRY_MW-102 — MONITORING WELL
- TRY_WES-01 — WETLAND SOIL SAMPLE LOCATION
- TRY_SW-1 — SURFACE WATER AND/OR SEDIMENT SAMPLE LOCATION
- LEACHATE SAMPLE LOCATION
- TRY-SW-4 — PERMANENTLY INSTALLED STAFF GAUGE
- B1 — INITIAL PILOT BORING FOR LIF INVESTIGATION
- M1 — INITIAL PILOT BORINGS FOR MIP/HPT INVESTIGATION

SCALE: 1" = 20'

LOCUS PLAN
SCALE: 1" = 2,000'

| NO. | ISSUE/DESCRIPTION | BY | DATE |
|---|---|---|---|
| | | | |
| | | | |

TROY MILLS LANDFILL
SUPERFUND SITE

TROY, NEW HAMPSHIRE

LOCUS AND SITE PLAN / INITIAL PILOT BORING LOCATIONS

PREPARED BY:
GZA GeoEnvironmental, Inc.
Engineers and Scientists
380 HARVEY ROAD
MANCHESTER, NEW HAMPSHIRE 03103
(603) 623-3600

PREPARED FOR:

| | | | |
|---|---|---|---|
| PROJ MGR: MBA | REVIEWED BY: SRL | CHECKED BY: MBA | FIGURE 1 |
| DESIGNED BY: ATD | DRAWN BY: JPN | SCALE: 1" = 30' | |
| DATE MAY 2012 | PROJECT NO. 04.0029395.11 | REVISION NO. | SHEET NO. |

© 2011 - GZA GeoEnvironmental, Inc. GZA-P:\Acad\0029300\04.0029395\01\04.0029395.11 Troy LNAPL Follow-On Invest\Figures-CAD\Figure 1 - Locus and Site Plan 22x34.dwg [LOCUS] July 17, 2012 - 12:53pm joseph.vickers

# APPENDIX A

PROJECT ORGANIZATION CHART AND RESPONSIBLITIES

## Project Organizational Chart
## Troy Mills Superfund Site, Troy, New Hampshire

***New Hampshire Department of Environmental Services***
*Project Manager*

Robin Mongeon, P.E.
603-271-7378

***United States Environmental Protection Agency Region I***
*Remedial Project Manager*

Richard W. Hull
617-918-1882

***New Hampshire Department of Environmental Services***
*Quality Assurance Coordinator*
Sharon Perkins
603-271-6805

***GZA Principal-in-Charge***

Steven R. Lamb
603-232-8741

***GZA Senior Project Manager***
Michael B. Asselin
603-232-8739 – Office
603-203-9705 – Cell

***GZA Project Quality Assurance Officer***

Amy T. Doherty
603-232-8763 – Office
603-361-4222 – Cell

***GZA Health and Safety Manager***

Jayanti Chatterjee
973-303-9796

GZA Technical Field Staff
Stefanie Lamb, P.G., Field Engineer (603-765-9720)
Heidi Rizza; Field Engineer (603-361-0177)
Tanya Justham; Field Engineer (603-493-1548)
Al Jacobson; Senior Tech (603-493-1599)

**Laboratory Services**
NHDPHS Laboratory
(General Analytical Services)
Lou Barinelli, Assistant Laboratory Director 603-271-2994

ESS Laboratory
(Supporting Analytical Services)
Contact: Christine Taylor at 401-461-7181, Ext. 3039

**Field LIF and MIP/HPT Scanning Services**
Columbia Technologies, Inc.
Contact: Dov Hoffman 888-344-2704, Ext. 207

**Data Validation**
NHDES Laboratory
GZA

# APPENDIX B

GZA STANDARD OPERATING PROCEDURES

*SOP L-1:*

WATER LEVEL / LNAPL THICKNESS MEASUREMENTS

*Water Level Measurement Form*

*LNAPL Measurement Form*

# WATER LEVEL / LNAPL THICKNESS MEASUREMENTS

## PURPOSE

This Standard Operating Procedure (SOP) *Water Level / LNAPL Thickness Measurements* is to establish guidelines for the manual determination of both the depth to water and the thickness of Light Non-Aqueous Phase Liquid (LNAPL) in monitoring wells at the Troy Mills Landfill Superfund Site in Troy, New Hampshire during the 2012 NLAPL investigation. Only a limited number of locations will be measured during this investigation. Refer to the attached measurement forms.

In general, water-level measurements are used to construct water table or potentiometric surface maps and to determine flow direction as well as other aquifer characteristics. Therefore, a synoptic water level measurement round should be performed in the shortest possible time (preferably within a 24-hour period) before any purging and sampling activities begin.

Any modifications to this SOP shall be approved by NHDES in consultation with the EPA in advance, documented in the site logbook, and presented in the final report.

## EQUIPMENT AND MATERIALS

- Site-specific plan and boring logs;
- Field book;
- Water level / LNAPL field forms (see attached);
- Electronic water level meter and/or Oil Water Interface Probe of appropriate lengths (i.e., 100 ft, 200 ft, and 300 ft, and measures in increments of 0.01 feet);
- Gate keys/well keys and other applicable field equipment to open wells/manhole covers;
- Indelible black-ink pen (Sharpie);
- Personal protective clothing and gear; and
- Decontamination supplies in accordance with the SOP.

## GENERAL INFORMATION

All monitoring wells should be locked at all times, or within a secure locked area, to ensure the integrity of the well.

If water level measurements are being completed for the first time following well installation (or if it does not already exist), a survey mark/physical notch should be placed on the top of the riser or casing as a reference point for future groundwater level measurements. If the top of the riser or

casing is not flat, make the reference point the highest point. The measurement reference point should be documented in the site logbook.

All field personnel must be made aware of the measurement reference point (top of casing [TOC] or top of PVC pipe [TOPVC]) being used in order to ensure the collection of comparable data.

Before measurements are made, water levels in monitoring wells should be allowed to stabilize for a minimum of 24 hours after well construction and development. In low yield situations, recovery of water levels to equilibrium may take longer. All measurements should be made to an accuracy of 0.01 feet.

All equipment shall be decontaminated prior to use in accordance with the decontamination SOP.

**WATER LEVEL MEASUREMENT PROCEDURES**

Care should be taken to minimize water column disturbance. Use the following procedures to collect water level measurements:

1.& Open the well and monitor the headspace with the appropriate air monitoring instrument to determine the presence of volatile organic compounds (if applicable).

2.& Lower the electronic water level meter probe and measuring tape into the well until the water surface is reached as indicated by a tone or meter deflection. Record the distance from the reference point to water surface.

3.& Record the distance from the water surface (to 0.01 feet), as determined by the audio signal or tone, to the reference measuring point (i.e., top of PVC riser or casing) and record on the field measurement form (see Synoptic Water Level Measurement Form). In addition, note the reference point used (top of PVC riser or casing).

4.& For any well not previously sampled by GZA, remove the tubing from the well and measure the length of all downhole tubing to verify the tubing intake. Inspect the tubing for integrity. Record length of downhole tubing and observations on the Synoptic Water Level Measurement Form. Replace tubing and secure to the tubing in the well.

5.& The depth to the bottom of the monitoring well should be confirmed in each well included on **Table 4** and recorded on the Synoptic Water Level Measurement Form based on the following:

a.& If a bladder pump has been installed in a monitoring well, the depth to the bottom of the monitoring well will be confirmed at such time when the bladder pump is removed for repairs or maintenance activities, or if a significant increasing trend in the turbidly values has been observed; and

b.& In monitoring wells where there has been no bladder pump installed, the depth to the bottom of the monitoring well will be confirmed once every five years, during the sampling event just prior to the 5-year review.

6.& In field book/field sheet, note if the lock was damaged or missing and any physical changes to well condition, such as erosion or cracks in protective concrete pad, roadbox, standpipe, etc.

7.& Remove all downhole equipment used for the water level measurement, and replace well cap and locking steel caps.

8.& Decontaminate all the equipment entering the well(s) in accordance with the decontamination SOP.

**LNAPL THICKNESS MEASUREMENT PROCEDURES (WELLS/TRENCH MANHOLES)**

Care should be taken to minimize water column disturbance. Use the following procedures to collect LNAPL thickness measurements:

1.& Open the well/trench manhole cover and monitor the headspace with the appropriate air monitoring instrument to determine the presence of VOCs (if applicable).

2.& Lower the Oil Water Interface Probe and measuring tape into the well/trench manhole until the LNAPL surface is reached as indicated by a solid audio tone. Record the distance from the reference point to the LNAPL surface on the LNAPL Thickness Measurement Form.

3.& Continue to lower the probe and measuring tape into the well / trench manhole until the LNAPL/water interface is reached as indicated by a beeping audio tone. Record the distance from the reference point to LNAPL/water interface on the LNAPL Thickness Measurement Form.

4.& Calculate the thickness by taking the difference between the two measurements and record on the LNAPL Thickness Measurement Form.

5.& If there is no measureable LNAPL thickness; however, globules are observed on the water surface or on the probe tip, record the thickness as “Trace”.

6.& In field book/field sheet, note if the lock was damaged or missing and any physical changes to well condition, such as erosion or cracks in protective concrete pad, roadbox, standpipe, etc.

7.& Remove all downhole equipment used for the LNAPL thickness measurement, and replace well cap and locking steel caps/trench manhole cover.

8. Decontaminate all the equipment entering the well(s) in accordance with the decontamination SOP.

## RECORDS AND DOCUMENTATION

All water level/ LNAPL thickness information should be recorded on the attached Water Level Measurement and LNAPL Thickness Measurement Forms

## APPLICABLE REFERENCES AND STANDARDS

United States Environmental Protection Agency – Environmental Response Team Standard Operating Procedures "Water Level Measurement" SOP #2043 Revision 0.1, February 11, 2000. USEPA Contract 68-C4-0022

Water Level Measurement Procedure included in the current Hazardous Waste Remediation Bureau Master QAPP, EPA RFA#08036.

## ATTACHMENTS

Water Level Measurement Form
LNAPL Thickness Measurement Form

P:\04Jobs\0029300s\04.0029395.00\04.0029395.11 Troy LNAPL Follow-On Invest\Work\Task 1 - SAP Workplan\Final Troy SAP Workplan 071712\Revised SOPs\SOP L-1_1 Water Level and LNAPL Measurement 051311 - SP (2).doc

**Water Level Measurement Form**
Troy Mills Landfill Superfund Site
Troy, New Hampshire

Date:_____

Field Engineer:_____

| **Monitoring Well Designation** | **Well Type** (2-in, 1.5-in etc) | **Measuring Point** | **Reported Depth to Well Bottom** (ft, referenced to measuring point) | **Measured Depth To Water** (ft, referenced to measuring point) | **Measured Depth to Well Bottom** (ft referenced to measuring point, only if specified in SAP) | **Comments** |
|---|---|---|---|---|---|---|
| **Wells Currently Sampled That Have Screen Lengths Greater than 10 feet** | | | | | | |
| TRY_MW-101 | 1 1/2-in PVC | Casing | 82 | | | |
| TRY_MW-601S | 2-in PVC | PVC | 29.3 | | | |
| TRY_MW-602S | 2-in PVC | PVC | 36 | | | |
| **Wells Currently Sampled With Screen Lengths Equal to or Less than 10 feet** | | | | | | |
| TRY_MW-205 | 2-in PVC | PVC | 39.1 | | | |
| TRY_MW-801 | 2-in PVC | Casing | 46.4 | | | |
| TRY_MW-802 | 2-in PVC | PVC | 35.6 | | | |
| TRY_MW-803 | 2-in PVC | PVC | 32.3 | | | |
| TRY_MW-804 | 2-in PVC | PVC | 36.0 | | | |
| TRY_MW-805 | 2-in PVC | PVC | 42.4 | | | |

**Notes:**

1. "-" indicates that data was not obtained.
2. NA not applicable

**LNAPL Thickness Measurement Form**
Troy Mills Landfill Superfund Site
Troy, New Hampshire

Date:_____

Field Engineer:_____

| **Monitoring Well Designation** | **Well Type** (2-in, 1.5-in etc) | **Measuring Point** | **Reported Depth to Well Bottom** (ft, referenced to measuring point) | **Measured LNAPL Surface** (ft, referenced to measuring point) | **Measured Depth To LNAPL/Water Interface** (ft, referenced to measuring point) | **LNAPL Thickness** (feet) | **Measured Depth to Well Bottom** (ft, referenced to measuring point, only if specified in SAP) | **Comments** |
|---|---|---|---|---|---|---|---|---|
| **Wells With LNAPL Thickness Measurements Only** | | | | | | | | |
| TRY_MW-C1S | 2-in PVC | PVC | 15.0 | | | | | |
| TRY_MW-C2S | 2-in PVC | PVC | 17.2 | | | | | |
| TRY_MW-C3S | 2-in PVC | PVC | 17.8 | | | | | |
| TRY_MW-C4S | 2-in PVC | PVC | 16.7 | | | | | |
| TRY_MW-C5S | 2-in PVC | PVC | 15.0 | | | | | |
| TRY_MW-C7S | 2-in PVC | PVC | 15.0 | | | | | |
| TRY_MW-C8S | 2-in PVC | PVC | 18.1 | | | | | |
| TRY_MW-201S | 1 1/2-in PVC | PVC | 18.2 | | | | | |
| TRY_MW-201P | 4-inch Casing | Casing | 53.7 | | | | | |
| | | | | | | | | |
| | | | | | | | | |
| | | | | | | | | |

**Notes:**

1. "-" indicates that data was not obtained.

*SOP L-2:*

CALIBRATION OF HACH TURBIDITY METER

*Calibration Data Form*

# CALIBRATION OF TURBIDITY METER

## PURPOSE

The purpose of this standard operating procedure (SOP) is to provide a framework for calibrating the Hach 2100P Turbidity Meter that will be used to collect turbidity measurements for ground water at the Troy Mills Landfill Superfund Site in Troy, New Hampshire.

**All field instruments must be calibrated, and have a calibration check, once in the office prior to the sampling event to ensure that the units are working properly.**

## CALIBRATION ACCEPTANCE CRITERIA

The instrument calibration shall be checked at the beginning of each sampling day at the Site prior to sample collection. If the morning calibration check is not within the acceptable range the instrument shall be recalibrated using all the standards and the calibration shall be checked again. If problems with the instrument continue, a backup instrument shall be calibrated and used in place of the inoperable unit.

The calibration shall be checked again at the end of the day of use to ensure that the instruments have remained in calibration throughout the day. In addition, should any erratic or illogical readings occur between calibrations, the instrument shall be recalibrated in order to ensure that representative measurements are obtained. All calibration and check values shall be documented on the calibration log maintained by each user (see attached log).

If a calibration check at the end of the day is not within the acceptable range the data collected that day for that parameter shall be qualified in its use. This qualification shall be documented on the calibration log and the field sheets/logs for the appropriate sampling locations. For example: If the afternoon turbidity calibration check was not within the acceptable range that day, the turbidity data collected by that instrument on that day would be qualified as useful only as a screening tool and not as representative turbidity measurements of the water being sampled. That qualification would then be documented on the calibration log and the sampling worksheets or log book for each of the locations where the instrument was used.

## COLD WEATHER CONDITIONS

Given the temperature sensitivity of the calibration solutions in very cold weather conditions, the New Hampshire Department of Environmental Services (NHDES) project manager may approve performing the morning calibration and calibration check in the office just prior to going into the field and the end of the day calibration check upon returning to the office. Careful thought must be given before approval. On one hand this may avoid delays and budget increases due to cold weather calibration issues in the field. On the other hand, not being able to check the calibration or re-calibrate in the field may result in the qualification or loss of data if there are problems with

the equipment that day. In each case, this deviation to the normal procedure must be approved by the NHDES project manager in advance. If approved, it must be documented on each Calibration Log and in all Site sampling and annual reports that the calibration and checks for that day were performed off-site due to very cold weather conditions, including where the calibration and checks were performed and that it was approved in advance by the NHDES project manager. See page two of the attached Calibration Log.

**EQUIPMENT AND MATERIALS**

The following is a list of equipment and materials used during calibration:

- Hach 2100P Turbidity meter
- Calibration standards (NTU <0.1, 20, 100, 800)
- Kimwipes
- Calibration log

**GENERAL INFORMATION**

In general, all instrumentation necessary for field monitoring and health and safety purposes shall be maintained, tested and inspected according to the manufacturer's instructions. It is assumed that most of this equipment will be rented and is not owned by the contractor. Any reference made to a vendor applies to the owner/renter of the equipment.

Prior to calibration, the instrument must be cleaned in accordance with the manufacturer s instructions, preferably by the vendor if the unit is rented. Failure to perform this proper maintenance step can lead to erratic measurements. The vendor is required to provide written documentation (which will be included in sampling reports) that indicates the equipment was cleaned, by who and dated.

Calibration standard values, check results, and maintenance for each piece of equipment shall be documented on the calibration logs and included in data/annual reports. This information includes dates, personnel, calibration standards expiration dates, etc. A calibration log is provided at the end of this SOP.

This SOP requires that the manufacturer’s instruction manual(s) (including the instrument specifications) accompany the instruments into the field.

Turn on the instrument and allow it to warm up according to the manufactures instructions.

Record the lot number and expiration date of each calibration solution on the calibration log.

## CALIBRATION PROCEDURES

## TURBIDITY

The turbidity method is based upon a comparison of intensity of light scattered by a sample under defined conditions with the intensity of light scattered by a standard reference suspension. A turbidimeter is a nephelometer with a visible light source for illuminating the sample and one or more photo-electric detectors placed ninety degrees to the path of the light source.

The HWRB low flow procedure requires that the turbidity meter shall have a calibration range from 0.00 to 800 (1000) NTUs.

Condensation (fogging):
Condensation may occur on the outside of the sample cell when measuring a cold sample in a warm, humid environment. Condensation interferes with turbidity measurement, so all moisture must be thoroughly wiped off the sample cell before measurement. If fogging recurs, let the sample warm slightly by standing at ambient temperature or immersing in a container of ambient temperature water for a short period. After warming, gently invert the sample cell to thoroughly mix the contents before measurement.

This procedure is based on the use of the Hach 2100P Turbidimeter and the commercially available StablCal® Formazin Primary Turbidity Standards.

Calibration/Calibration Check Procedures for the Hach 2100P Turbidity Meter

1.& Use the commercially available StablCal® Formazin Primary Turbidity Standards.

2.& Before performing the calibration procedure, make sure the cells are not scratched. If the cell is scratched, the standard must be replaced.

3.& Allow the calibration standards to equilibrate at the ambient temperature.

4.& Turn on the meter.

5.& The meter should be in the Auto Range. "Auto Rng" and 0.00 NTUs should show on the display. If not press the range key until it is in the auto range and reading to two (2) decimal points (e.g.. 0.00)

6.& Gently invert the standards to thoroughly mix the contents. (**DO NOT SHAKE**)

7.& Wipe the standards with a soft, lint free cloth or Kimwipe to make sure the outside surfaces are dry, free from fingerprints and dust.

8.& Insert the standard into the cell compartment by aligning the orientation mark on the cell with the mark on the front of the cell compartment.

9.& Insert the first (blank) standard, <0.1 NTU, into the cell compartment and close the lid.

10.& Press **CAL.** The "CAL" and "S0**"** icons will be displayed (the "0" will flash).

11.& Press **READ.** The instrument will count down from 60 to 0, read the blank and use it to calculate a correction factor for the second, 20 NTU standard. The display will automatically increment to the next standard. The display will now show "S1" (with the 1 flashing) and "20 NTU", the value of the second standard. Remove the <0.1 NTU standard from the compartment.

12.& Insert the second, 20 NTU, standard into the cell compartment and close the lid.

13.& Press **READ.** The instrument will count down from 60 to 0, measure the turbidity and store the value. The display will automatically increment to the next standard with the display showing "S2" (with the 2 flashing) and "100 NTU", the value of the third standard. Remove the 20 NTU standard from the compartment.

14.& Insert the third, 100 NTU, standard into the cell compartment and close the lid.

15.& Press **READ.** The instrument will count down from 60 to 0, measure the turbidity and store the value. The display will automatically increment to the next standard. The display will show the "S3" (with the 3 flashing) and the 800 NTU standard, the value of the fourth standard. Remove the 100 NTU standard from the compartment.

16.& Insert the fourth and last, 800 NTU, standard into the cell compartment and close the lid.

17.& Press **READ.** The instrument will count down from 60 to 0, measure the turbidity and store the value. Then the display will increment back to the S0 display. Remove the 800 NTU standard from the compartment and close the lid.

18.& Press **CAL** to accept the calibration. The instrument will return to the measurement mode automatically.

19.& To check the calibration (in run mode), insert the 20 NTU standard into the cell compartment and close the lid.

20.& Press **READ.** The meter will display a lamp symbol (which looks like a light bulb) indicating that the reading is in progress. The lamp turns off and the measurement value is displayed. Record the turbidity reading on the calibration log. The calibration check must be +/- 5% (19-21 NTUs). If not, recalibrate using all standards. If re-calibration is unsuccessful, use new standards, consult the manufacture/vendor or replace the unit.

21. Remove the 20 NTU check standard from the compartment and close the lid.

## DATA MANAGEMENT AND RECORDS MANAGEMENT

All calibration information must be documented on the attached calibration log, including the instrument manufacturer, model number and identification number; standards used to calibrate the instruments (including source, lot numbers and expiration dates); date; personnel; the instrument readings, etcetera. Each daily calibration log shall be dated and signed by the user.

## REFERENCES

Calibration of Field Instruments SOP included in the current Hazardous Waste Remediation Bureau Master QAPP, EPA RFA#08036.

Hach Model 2100P Portable Turbidity Instruction Manual

## ATTACHMENTS

Calibration Log

P:\04Jobs\0029300s\04.0029395.00\04.0029395.11 Troy LNAPL Follow-On Invest\Work\Task 1 - SAP Workplan\Final Troy SAP Workplan 071712\Revised SOPs\SOP L-2_1 Calibration of Hach Turbidity Meter 053112 -SP Redline (2).doc

# HACH 2100P TURBIDIMETER CALIBRATION LOG

**Date:** **Time:** Field Personnel:

**HACH Serial Number:** **Rental Company:**

**Pre-cleaned Certification Provided By: Personnel** **Date:**

## Beginning Calibration

| Calibration Standards | Value of Standard | Check as Completed | Lot # | Expiration Date | Comments |
|---|---|---|---|---|---|
| Turbidity 1st Standard (blank) | **<0.1 NTU** | | | | **Calibrate w/ StablCal® Formazin Primary Turbidity Standards** |
| 2nd Standard | **20 NTU** | | | | |
| 3rd Standard | **100 NTU** | | | | |
| 4th Standard | **800 NTU** | | | | |

## Post Calibration Check

| Calibration Check | Value of Standard | Check Results | Acceptable Range | Within Range (yes/no) | Lot # | Expiration Date | Comments |
|---|---|---|---|---|---|---|---|
| Turbidity 2nd Standard (NTU) | **20** | | **+/- 5%** | | | | **Range 19.0 - 21.0 NTU** |

Calibration & Post Calibration Check Performed by: _____(Print)_____ (Sign)

## Daily Morning Calibration Check

| Calibration Check | Value of Standard | Check Results | Acceptable Range | Within Range (yes/no) | Lot # | Expiration Date | Comments |
|---|---|---|---|---|---|---|---|
| Turbidity 2nd Standard (NTU) | **20** | | **+/- 5%** | | | | **Range 19.0 - 21.0 NTU** |

Calibration Check Performed by: _____(Print)_____ (Sign)

## END OF DAY INSTRUMENT CALIBRATION CHECK

| Calibration Check | Value of Standard | Check Results | Acceptable Range | Within Range (yes/no) | Lot # | Expiration Date | Comments |
|---|---|---|---|---|---|---|---|
| **Date:** **Time:** | | **Personnel:** | | | | | |
| Turbidity 2nd Standard (NTU) | **20** | | **+/- 5%** | | | | **Range 19.0 - 21.0 NTU** |

Calibration Check by _____ _____

Print Name Signature

Notes:

1) If the post calibration check is not within the acceptable range the meter must be recalibrated.

2) If the end of the day calibration check is not within the acceptable range the data collected that day for that parameter shall be qualified in it's use.

3) All calibration checks must be made in the run mode (on a run/measurement screen), not the calibration mode.

4) If the lot numbers and expiration dates are the same as the initial calibration place a check mark ✓ in the appropriate box.

**Weather Conditions:**
**If the calibration/calibration check was performed off-site (e.g. in the office, etc) due to weather conditions, check (√) here:_____**

**Where off-site was the calibration/calibration check performed?** _____

**List wells sampled using this equipment on this day if data needs to be qualified** _____

*SOP L-3:*

FIELD MONITORING: PHOTOIONIZATION DETECTOR

# FIELD MONITORING: PHOTOIONIZATION DETECTOR (TEI MODEL 580B)

## PURPOSE

To provide operating procedures for the TEI Model 580B photoionization detector (PID) for field surveying or organic vapors at the Troy Mills Landfill Superfund Site in Troy, New Hampshire.

Note: Field staff need to check with the principal-in-charge (PIC) and/or the project manager (PM) before conducting field work to confirm the actual field procedure to be followed and to discuss and document any deviations to GZA's SOP.

## EQUIPMENT AND MATERIALS

- TEI Model 580B photoionization detector, including probe assembly, and battery charger;
- Teflon or silastic tubing;
- Teflon "T"valve;
- Sample containers (8-ounce glass jars);
- Aluminum foil;
- Calibration gas (100 parts per million [ppm] isobutylene-in-air and zero air); and
- Instruction manual "Model 580B, OVM/Data logger."

## PROCEDURES

1. Preparation for Calibration and Use

   a.& Assemble the sample probe, water trap (paper filter), and connector lock.

   b.& Insert the stainless steel filter into the detector inlet.

   c.& Attach the assembled probe into the detector inlet by screwing the connector lock until hand tight.

   d.& Insert the power plug into the "RUN/CHG" port. The LCD screen should indicate "Lamp Out."

   e.& Turn on the detector by depressing the "ON/OFF" button. Continue depressing the "ON/OFF" button until the pump is activated. This will also activate the UV lamp. Once the lamp is lit, the display will show the concentration of what is being pumped into the detector. Results will be displayed as ppm.

Copyright© 2010 GZA GeoEnvironmental, Inc. &

2. Calibration

a.& Calibrate the detector daily prior to beginning field activities, as well as, following all field activities.

b.& Use a Teflon "T" valve to connect three lengths of Teflon or silastic tubing as shown on page 4-2 of the Model 580B Instruction Manual.

c.& Manually screw (reverse thread) a constant flow pressure regulator to a zero air calibration standard.

d.& Connect the tubing to the zero air calibration standard and the inlet to the detector. Allow the third length of tubing to vent to the atmosphere.

e.& Activate calibration mode by pressing the "RESET" button.

f.& To conduct a new calibration press the "-/CRSR" button.

g.& Introduce the zero gas to the detector by opening the constant flow regulator.

h.& Press the "RESET" button. The LCD screen will read "ZEROING." Once the detector has been properly zeroed the LCD screen with read "SPAN PPM = 0000."

i.& Close the constant flow regulator and remove the tubing from the zero air standard.

j.& Simultaneously press the "RESET" and "+/INC" buttons to set the span ppm to "100." Press the "+/INC" button again to display "SPAN GAS RESET WHEN READY."

k.& Connect the tubing to the isobutylene-in-air standard. Introduce the standard to the detector by opening the constant flow regulator.

l.& Activate calibration mode by pressing the "RESET" button.

m.& "The LCD screen should read "MODEL 580B CALIBRATING."

n.& If calibration is unsuccessful refer to the Instruction Manual to troubleshoot. Record all calibration measurements in field log.

3.& Operation – Air Quality Monitoring for VOCs

a.& Turn on the detector following steps 1.a. through 1.e. above. Record the background concentration.

b.& The probe should be held in close proximity to the area being monitored to provide a representative reading. Collect an additional reading within the breathing zone and record both readings.

c.& Record the detected concentrations in a field book or field summary sheet as ppm above background. Refer to the site-specific GZA Health and Safety Plan to determine safe breathing zone concentrations. Use of a respirator may be necessary should concentrations warrant.

Copyright© 2010 GZA GeoEnvironmental, Inc. &

4. Operation – Soil Sample Screening for VOCs

a. Obtain soil samples immediately after collection during exploration activities.

i.& Split spoon samples – Transfer an appropriate volume of soil into a laboratory issued sample container immediately after opening the spoon.

ii.& Other samples – For test pits, hand augers, and all other soil samples immediately transfer an appropriate volume of soil into a laboratory issued sample container.

b.& Cut the aluminum foil into approximately 3-inch by 3-inch squares.

c.& Fill an 8-ounce glass jar with soil to be screened, leaving approximately 1 inch of airspace.

d.& Tightly cover the mouth of the jar with an aluminum foil square and tighten the cap. Remove the jar from direct sunlight and allow 5 minutes for transfer of organic compounds from soil to the air space. Shake jar for 30 seconds; allow to sit at least 15 minutes but no longer than 2 hours.

e.& Turn on the detector following step 1.a. through 1.e. above. Record the background concentration.

f.& Shake the jar for another 30 seconds prior to taking a reading. Unscrew the cap, and gently insert the sample probe through the foil into the air space above the soil. Do not allow the probe to contact soil or liquid contained within the jar.

g.& Record the maximum concentration measured by the detector onto a boring log, test pit log, or appropriate field data collection sheet as ppm above background.

h.& Periodically collect breathing zone measurements as well as measurements directly above the borehole or excavation. Refer to the site-specific GZA Health and Safety Plan to determine safe breathing zone concentrations. Use of a respirator may be necessary should concentrations warrant.

5.& Shut Down

a.& Complete an end-of-the-day calibration check.

b.& Turn off the detector by depressing the “ON/OFF” button. Continue depressing the “ON/OFF” button until the pump shuts down.

c.& Remove the power plug from the “RUN/CHG” port.

d.& Unlock the probe from the detector inlet by unscrewing the connector lock. Place probe in the carrying case.

e.& Remove the stainless steel filter from the detector inlet and return it to the carrying case.

f.& Return the detector to the carrying case only if recharging the internal battery is not needed.

Copyright© 2010 GZA GeoEnvironmental, Inc. &

g. If recharging is required, attach the battery charger plug into the "RUN/CHG" port. Plug the associated AC adapter into a wall outlet.

## RECORDS AND DOCUMENTATION

Readings will be recorded on an applicable log sheet for the work being performed in accordance with the approved work plan. Note: Specify lamp energy rating, calibration standard, and special response factors or curves that may be employed.

## SPECIAL NOTES

1. A photoionization detector is not the only air quality monitoring instrument recommended for unknown air spaces. Discuss appropriate monitoring with the project manager and/or office health and safety manager. This instrument will not detect methane and should not be used to ascertain whether further personal protective equipment may be necessary.

2.& This detector will utilize numerous lamp energies (i.e. 10.0 eV, 10.6 eV, and 11.8 eV). For measuring compounds with ionization potentials between 10.0 eV and 11.8eV, the 11.8 eV lamp is recommended. The instruction manual provides numerous ionization potentials for various volatile organic compounds.

3.& Maintenance procedures, including lamp cleaning are specified in the Instruction Manual.

## APPLICABLE STANDARDS AND REFERENCES

Instruction Manual Model 580B OVM/DATALOGGER, Thermo Environmental Instruments, Inc.

m:\files\nhdes master qapp - june 2009\appendix d - sops\sop d-6 pid.doc

Copyright© 2010 GZA GeoEnvironmental, Inc. &

*SOP L-4:*

ROTOSONIC DRILLING

*Boring Log Form*

*ASTM D 6914-04 Standard Practice for Sonic Drilling for Site Characterization and the Installation of Subsurface Monitoring Devices*

*ASTM D 5434-97 Standard Guide for Field Logging of Subsurface Explorations of Soil and Rock*

# OVERBURDEN BORINGS: MACHINE OPERATED SONIC DRILLING

## PURPOSE

This Standard Operating Procedure (SOP) *Overburden Borings – Machine Operated Sonic Drilling,* provides a general framework for advancing shallow earth borings employing the Sonic Drilling method for subsurface investigations at the Troy Mills Landfill Superfund Site in Troy, New Hampshire.

Note: Field staff is required to confirm actual field procedure to be used with the principal-in-charge (PIC) and/or the project manager (PM) before conducting field work.

Any modifications to this SOP shall be approved by the New Hampshire Department of Environmental Services (NHDES) in consultation with the United States Environmental Protection Agency (EPA) in advance, documented in the site logbook, and presented in the final report.

## EQUIPMENT AND MATERIALS

The driller shall be capable of providing continuous coring with a minimum inside diameter sufficient for facilitating required sampling and well construction. In addition, the following equipment shall be present:

- Outer casing ranging from 5-inch up to 12-inch diameter;
- A 3-inch to 10-inch diameter core barrel for sampling purposes;
- Rotating and vibrating drill bit; and
- Decontamination equipment and supplies.

## PROCEDURES

The sonic drilling system employs simultaneous high-frequency vibrational rotational motion coupled with down-pressure to advance the sonic drill bit. The frequency is generally between 50 and 120 hertz (cycles per second) and can be varied by the operator.

After installing the well screen and riser and the well construction materials, the outer casing is gently vibrated back out of the borehole. The vibration positively places the well construction material against the borehole wall around the screen and riser.

The core barrel is advanced ahead of the outer casing in 1- to 30-foot increments, depending on the type of material, degree of subsurface contamination and sampling objectives. The outer casing can be advanced down over the inner drill rods, and core barrel is then removed, the

sample is recovered and the cycle is repeated. The outer casing can be advanced completely dry in most situations based on the requirements of the project.

Sonic drilling techniques should be employed without the use of drilling water while drilling on hazardous waste sites.

If water is deemed necessary by the driller, its use must be approved by the GZA project manager. The source of the water must be approved by GZA and the water used should be potable. When water is used to advance boring, it must not be recirculated back into the boring, unless specifically authorized by the GZA project manager.

**RECORDS AND DOCUMENTATION**

The details of the boring shall be recorded on the GZA boring log (copy attached). Refer to the following GZA SOPs included in the SAP *Burmister Classification System* SOP and *A Guide for Description of Soils SOP*, relative to documenting and recording soil classifications.

Refer to the *Chain-of-Custody*, *Sample Packaging and Shipment Procedures* SOP included in the SAP for documentation requirements and the *Sampling Equipment Decontamination Procedures* SOP for decontamination requirements.

**SPECIAL NOTES**

Whenever standard operating procedures are varied, it shall be recorded. The drilling inspector should also record any detected odor from boring, and depth encountered.

**APPLICABLE STANDARDS AND REFERENCES** (See attached)

ASTM D6914-04 Standard Practice for Sonic Drilling for Site Characterization and the Installation of Subsurface Monitoring Devices.

ASTM D5434-97 Standard Guide for Field Logging of Subsurface Explorations of Soil and Rock.

GZA GeoEnvironmental, Inc. Boring Log

**ATTACHMENTS**

Boring Log Form

ASTM Standard D6914-04

ASTM Standard D5434-97

GZA
GeoEnvironmental, Inc.
*Engineers and Scientists*

Boring No.:
Page: 1 of
File No.:
Check:

Contractor:
Foreman:
Logged by:
Date Start/Finish:
Boring Location: See Plan
GS Elev.: Datum:

| | Auger/ Casing | Sampler |
|---|---|---|
| Type: | | SS |
| I.D.: | | 1.37 in |
| Hammer Wt.: | | 140 lb |
| Hammer Fall: | | 30 in |
| Rig Type: | | |

GROUNDWATER READINGS

| Date | Time | Depth | Casing | Stab |
|---|---|---|---|---|
| | | | | |
| | | | | |
| | | | | |
| | | | | |
| | | | | |

| Depth ( ft) | Sample Information: Casing Blows | No. | Pen./ Rec. ( in) | Depth ( ft) | Blows (/6") | N Value or Field Test Data | Sample Description & Classification | Stratum Desc. | Remarks | Equipment Installed |
|---|---|---|---|---|---|---|---|---|---|---|
| 5 | | | | | | | | | | |
| 10 | | | | | | | | | | |
| 15 | | | | | | | | | | |
| 20 | | | | | | | | | | |
| 25 | | | | | | | | | | |

REMARKS

All depth measurements are approximate. Stratification lines represent approximate boundary between soil types, transitions may be gradual. Water level readings have been made at times and under conditions stated. Fluctuations of groundwater may occur due to other factors than those present at the time measurements were made.

Boring No.:

GZA
GeoEnvironmental, Inc.
*Engineers and Scientists*

Boring No.:
Page: 2 of 3
File No.:
Check:

| Depth ( ft) | Sample Information: Casing Blows | No. | Pen./ Rec. ( in) | Depth ( ft) | Blows (/6") | N Value or Field Test Data | Sample Description & Classification | Stratum Desc. | Remarks | Equipment Installed |
|---|---|---|---|---|---|---|---|---|---|---|
| 35 | | | | | | | | | | |
| 40 | | | | | | | | | | |
| 45 | | | | | | | | | | |
| 50 | | | | | | | | | | |
| 55 | | | | | | | | | | |
| 60 | | | | | | | | | | |

**REMARKS**

All depth measurements are approximate. Stratification lines represent approximate boundary between soil types, transitions may be gradual. Water level readings have been made at times and under conditions stated. Fluctuations of groundwater may occur due to other factors than those present at the time measurements were made.

Boring No.:

Designation: D 6914 – 04$^{\epsilon 1}$

# Standard Practice for Sonic Drilling for Site Characterization and the Installation of Subsurface Monitoring Devices[1]

This standard is issued under the fixed designation D 6914; the number immediately following the designation indicates the year of original adoption or, in the case of revision, the year of last revision. A number in parentheses indicates the year of last reapproval. A superscript epsilon (ϵ) indicates an editorial change since the last revision or reapproval.

ϵ[1] NOTE—The figures were corrected editorially in November 2004.

## 1. Scope

1.1 This practice covers procedures for using sonic drilling methods in the conducting of geoenvironmental exploration for site characterization and in the installation of subsurface monitoring devices.

1.2 The use of the sonic drilling method for geoenvironmental exploration and monitoring-device installation may often involve preliminary site research and safety planning, administration, and documentation. This guide does not purport to specifically address site exploration planning and site safety.

1.3 Soil or Rock samples collected by sonic methods are classed as group A or group B in accordance with Practices D 4220. Other sampling methods may be used in conjunction with the sonic method to collect samples classed as group C and Group D.

1.4 The values stated in SI units are to be regarded as standard. The inch-pound units given in parentheses are for information only.

1.5 This practice offers a set of instructions for performing one or more specific operations. It is a description of the present state-of-the-art practice of sonic drilling. It does not recommend this method as a specific course of action. This document cannot replace education or experience and should be used in conjunction with professional judgment. Not all aspects of this practice may be applicable in all circumstances. This ASTM standard is not intended to represent or replace the standard of care by which the adequacy of a given professional service must be judged, nor should this document be applied without consideration of a project's many unique aspects. The word "Standard" in the title of this document means only that the document has been approved through the ASTM consensus process.

1.6 This practice does not purport to comprehensively address all the methods and the issues associated with drilling practices. Users should seek qualified professionals for decisions as to the proper equipment and methods that would be most successful for their site investigation. Other methods may be available for drilling and sampling of soil, and qualified professionals should have the flexibility to exercise judgment as to possible alternatives not covered in this practice. This practice is current at the time of issue, but new alternative methods may become available prior to revisions, therefore, users should consult manufacturers or sonic drilling services providers prior to specifying program requirements.

1.7 *This practice does not purport to address all the safety concerns, if any, associated with its use and may involve use of hazardous materials, equipment, and operations. It is the responsibility of the user of this standard to establish appropriate safety and health practices and determine the applicability of regulatory requirements prior to use.* For good safety practice, consult applicable OSHA regulations and drilling safety guides.[2,3,4]

## 2. Referenced Documents

2.1 *ASTM Standards—Soil Classification:*[5]

D 653 Terminology Relating to Soil, Rock and Contained Fluids

D 2113 Practice for Rock Core Drilling and Sampling of Rock for Site Investigation

D 2488 Practice for Description and Identification of Soils (Visual—Manual Method)

D 5434 Guide for Field Logging of Subsurface Explorations of Soil and Rock

2.2 *ASTM Standards—Drilling Methods:*[5]

D 1452 Practice for Soil Investigation and Sampling by Auger Boring

D 5088 Practice for Decontamination of Field Equipment

[1] This practice is under the jurisdiction of ASTM Committee D18 on Soil and Rock and is the direct responsibility of Subcommittee D18.21.01 on Direct Push Sampling.

Current edition approved March 1, 2004. Published April 2004.

[2] "Drilling Safety Guide," National Drilling Association.

[3] "Drillers Handbook," Thomas C. Ruda and Peter Bosscher, National Drilling Association.

[4] "Innovative Technology Summary Report," April 1995, U.S. Department of Energy.

[5] For referenced ASTM standards, visit the ASTM website, www.astm.org, or contact ASTM Customer Service at service@astm.org. For *Annual Book of ASTM Standards* volume information, refer to the standard's Document Summary page on the ASTM website.

Copyright © ASTM International, 100 Barr Harbor Drive, PO Box C700, West Conshohocken, PA 19428-2959, United States.



Copyright by ASTM Int'l (all rights reserved);
Reproduction authorized per License Agreement with Sheila Huck (PROSONIC Corporation); Thu Aug 18 14:24:31 EDT 2005

Used at Nonradioactive □aste Sites

D 5299 Guide for Decommissioning of Ground □ater □ells, Vadose □one Monitoring Devices, Boreholes, and other Devices for Environmental Activities

D 5781 Guide for use of Dual-□all Reverse-Circulation Drilling for the Geoenvironmental Exploration and the Installation of Sub-Surface □ater-□uality Monitoring Devices

D 5782 Guide for the Use of Direct Air Rotary Drilling for Geoenvironmental Exploration and the Installation of Subsurface □ater □uality Monitoring Devices

D 5783 Guide for the Use of Direct Rotary Drilling with □ater-Based Drilling Fluid for Geoenvironmental Exploration and the Installation of Subsurface □ater □uality Monitoring Devices

D 5784 Guide for the Use of Hollow Stem Augers for Geoenvironmental Exploration and the Installation of Subsurface □ater □uality Monitoring Devices

D 6151 Practice for Hollow Stem Drilling and Soil Sampling for Geotechnical Investigation

D 6286 Guide for Selection of Drilling Methods for Environmental Site Characterization

2.3 *ASTM Standards—Soil Sampling:*[5]

D 420 Practice for Investigating and Sampling Soil and Rock for Engineering Purposes

D 1586 Test Method for Penetration Test and Split-Barrel Sampling of Soil

D 1587 Practice for Thin-□alled Tube Sampling of Soils

D 3550 Practice for Ring-Lined Barrel Sampling of Soils

D 3694 Practice for Preparation of Sample Containers and for Preservation of Organic Constituents

D 4220 Practices for Preserving and Transporting Soil Samples

D 4700 Guide for Soil Sampling in the Vadose □one

D 6169 Guide for Selection of Soil and Rock Sampling Devices Used with Drill Rigs for Environmental Site Characterization

2.4 *ASTM Standards—Aquifer Testing:*[5]

D 4044 Test Method (Field Procedure) for instantaneous Change in Head (Slug Tests) for Determining Hydraulic properties of Aquifers

D 4050 Test Method (Field Procedure) for □ithdrawal and Injection □ell Tests for Determining Hydraulic Properties of Aquifer Systems

D 5092 Practice for Design and Installation of Ground □ater Monitoring □ells in Aquifers

2.5 *ASTM Standards—□ther:*[5]

D 3740 Practice for Minimum Requirements for Agencies Engaged in the Testing and□or Inspection of Soil and Rock as Used in Engineering Design and Construction

## □. □erm□no□o□□

3.1 Terminology used within this guide is in accordance with Terminology D 653. Definitions of additional terms may be found in Terminology D 653.

3.2 *Definitions of Terms Specific to This Standard:*

3.2.1 *amplitude*—range of drill bit movement necessary to overcome formation elasticity.

3.2.2 *bit face design*—the practice of changing the drill bit face to be neutral to, include, exclude, or shear the material being penetrated.

3.2.3 *forced vibration*—the tendency of one object to force an adjoining or interconnected object into vibrational motion.

3.2.4 *harmonic*—the point in a drill string where a special frequency creates a standing wave pattern throughout the string.

3.2.5 *hertz*—international unit of frequency, equal to one cycle per second.

3.2.6 *hydraulic e□traction*—the removal of the sample specimen from the solid sampling barrel by the application of fluid.

3.2.7 *natural frequency*—the frequency or frequencies at which an object tends to vibrate when disturbed.

3.2.8 *resonance*—when one object (sine generator) vibrating at the natural frequency of a second object (drill pipe or casing) forces the second object into vibrational motion.

3.2.9 *sine wave*—a wave form corresponding to a single-frequency periodic oscillation.

3.2.10 *sinusoidal force*—energy force generated by an oscillator that is transmitted to the drill tool string.

3.2.11 *sonic*—the practice of using high frequency vibration as the primary force to advance drill tools through subsurface formations.

3.2.12 *standing wave pattern*—a vibratory pattern created within the drill string where the vibrating frequency of a carrier causes a reflected wave from one end of the drill string to interfere with incidental waves from the source in such a manner that at specific points along the drill string it appears to be standing still. The resulting disturbance is a regular pattern.

## □. Summ□r□ of □r□ct□ce

4.1 Sonic drilling is the utilization of high frequency vibration aided by down pressure and rotation to advance drilling tools through various subsurface formations. All objects have a natural frequency or set of frequencies at which they will vibrate when disturbed. The natural frequency is dependant upon the properties of the material the object is made of and the length of the object. The sonic drill head provides the disturbance to the drilling tools causing them to vibrate. To achieve penetration of the formation the strata is fractured, sheared, or displaced. The high frequency vibration can cause the soil in contact with the drill bit and drilling casing string to liquefy and flow away allowing the casing to pass through with reduced friction. Rotation of the drill string is primarily for even distribution of the applied energy, to control bit wear, and to help maintain borehole alignment. The use of vibratory technology reduces the amount of drill cuttings, provides rapid formation penetration, and the recovery of a continuous core sample of formation specimens for field analysis and laboratory testing. Boreholes generated by sonic drilling can be fitted with various subsurface condition monitoring devices. Numerous sampling techniques can also be used with this system including thin walled tubes, split barrel samplers, and *in-situ* ground water sampling devices. Fig. 1 demonstrates the general principle of sonic drilling.



Copyright by ASTM Int'l (all rights reserved);
Reproduction authorized per License Agreement with Sheila Huck (PROSONIC Corporation); Thu Aug 18 14:24:31 EDT 2005

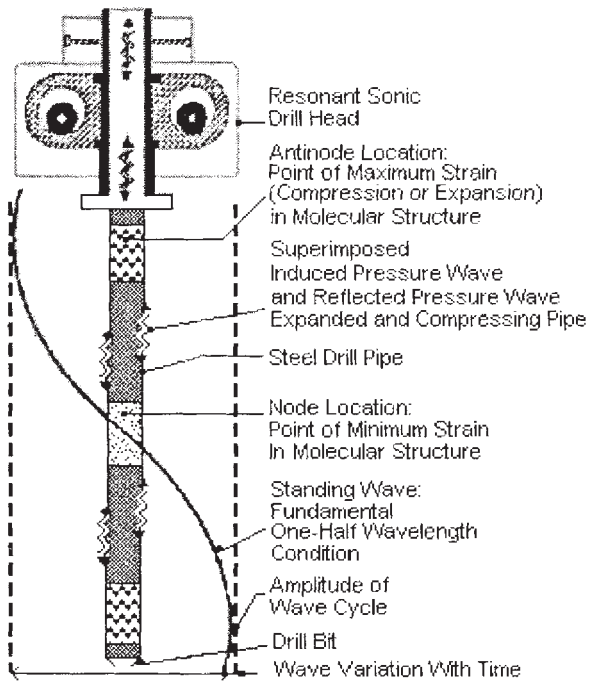


**FIGURE 1 General Principle of Sonic Drilling**

## 5. Significance and Use

5.1 Sonic drilling is used for geoenvironmental investigative programs. It is well suited for environmental projects of a production-orientated nature. Disposal of drilling spoils is a major cost element in any environmental project. Sonic drilling offers the benefit of significantly reduced drill cuttings and reduced fluid production. Sonic drilling offers rapid formation penetration thereby increasing production. It can reduce fieldwork time generating overall project cost reductions. The continuous core sample recovered provides a representative lithological column for review and analysis. Sonic drilling readily lends itself to environmental instrumentation installation and to *in-situ* testing. The advantage of a clean cased hole without the use of drilling fluids provides for increased efficiency in instrumentation installation. The ability to cause vibration to the casing string eliminates the complication of backfill bridging common to other drilling methods and reduces the risk of casing lockup allowing for easy casing withdrawal during grouting. The clean borehole reduces well development time. Pumping tests can be performed as needed prior to well screen placement to insure proper screen location. The sonic method is readily utilized in multiple cased well applications which are required to prevent aquifer cross contamination. Notwithstanding the possibility of vibratory effects on the surrounding formations, the same sonic drilling plus factors for environmental monitoring device installations carry over for geotechnical instrumentation as well. The installation of inclinometers, vibrating wire piezometers, settlement gauges, and the like can be accomplished efficiently with the sonic method.

5.2 The cutting action, as the sonic drilling bit passes through the formation, may cause disturbance to the soil structure along the borehole wall. The vibratory action of directing the sample into the sample barrel and then vibrating it back out can cause distortion of the specimen. Core samples can be hydraulically extracted from the sample barrel to reduce distortion. The use of split barrels, with or without liners, may improve the sample condition but may not completely remove the vibratory effect. When penetrating rock formations, the vibration may create mechanical fractures that can affect structural analysis for permeability and thereby not reflect the true *in-situ* condition. Sonic drilling in rock will require the use of air or fluid to remove drill cuttings from the face of the bit, as they generally cannot be forced into the formation. Samples collected by the dry sonic coring method from dense, dry, consolidated or cemented formations may be subjected to drilling induced heat. Heat is generated by the impact of the bit on the formation and the friction created when the core barrel is forced into the formation. The sampling barrel is advanced without drilling fluid whenever possible. Therefore, in very dense formations, drilling fluids may have to be used to remove drill cuttings from the bit face and to control drilling generated heat. In dry, dense formations precautions to control drilling generated heat may be necessary to avoid affecting contaminant presence. The affects of drilling generated heat can be mitigated by shortening sampling runs, changing vibration level and rotation speed, using cooled sampling barrels, collecting larger diameter samples to reduce affect on the interior of the sample, and using fluid coring methods or by using alternate sampling methods such as the standard penetration test type samplers at specific intervals. Heat generated while casing the borehole through dense formations after the core sample has been extracted can be alleviated by potable water injection and/or by using crowd-in casing bits that shear the formation with minimal resistance. Should borehole wall densification be a concern it can be alleviated by potable water



Copyright by ASTM Int'l (all rights reserved);
Reproduction authorized per License Agreement with Sheila Huck (PROSONIC Corporation); Thu Aug 18 14:24:31 EDT 2005

injection, by borehole wall scraping with the casing bit, by using a crowd-in style bit, or by injecting natural clay breakdown compounds.

5.3 Other uses for the sonic drilling method include mineral investigations. Bulk samples can be collected continuously, quite rapidly, in known quantities to assess mineral content. Aggregate deposits can be accurately defined by using large diameter continuous core samplers that gather representative samples. A limited amount of rock can be effectively penetrated and crushability determined. In construction, projects include freeze tube installations for deep tunnel shafts, piezometers, small diameter piles, dewatering wells, foundation anchors with grouting, and foundation movement monitoring instrumentation. Sonic drills can be used to set potable water production wells. However, production may not equal more conventional potable well drilling techniques because of the need to transport drill cuttings to the surface in short increments. Sonic drill units presently in use are in various sizes and most are truck mounted. Sonic drills can be skid or all-terrain vehicle mounted to access difficult areas.

5.4 Sonic drills can be adapted to such other drill methods as conventional rotary (Guide D 1583, Guide D 5782), down hole air hammer work (Guide D 5782), diamond bit rock coring; conventional and wireline (Practice D 2113), direct push probing (Guide D 6001, Guide D 6282), thin wall tube sampling (Practice D 1587), and standard penetration test split barrel sampling (Practice D 1586). The sonic drilling equipment offers more adaptability than most existing drilling systems. However, it is important to keep in mind that the technique the machine is designed for is the one at which it will be the most efficient. Long term use of sonic drills for other drilling methods may not be cost effective.

NOTE 1—The quality of the result produced by this standard is dependent on the competence of the personnel performing it, and the suitability of the equipment and facilities used. Agencies that meet the criteria of Practice D 3740 are generally considered capable of competent and objective testing/sampling/inspection/etc. Users of this standard are cautioned that compliance with Practice D 3740 does not in itself assure reliable results. Reliable results depend on many factors; Practice D 3740 provides a means of evaluating some of those factors. Practice D 3740 was developed for agencies engaged in the testing and/or inspection of soils and rock. As such, it is not totally applicable to agencies performing this practice. However, user of this practice should recognize that the framework of Practice D 3740 is appropriate for evaluating the quality of an agency performing this practice. Currently there is no known qualifying national authority that inspects agencies that perform this practice.

## 6. Criteria for Selection

6.1 Important criteria to consider when selecting the sonic drilling method include the following:

6.1.1 Diameter of borehole,

6.1.2 Sample quality (Class A, B, C, D) for laboratory physical testing (Refer to Practices D 4220),

6.1.3 Sample handling requirements such as containers, preservation requirements,

6.1.4 Subsurface conditions anticipated: soil type or rock type/hardness,

6.1.5 Ground water depth anticipated,

6.1.6 Boring depth,

6.1.7 Instrumentation requirements,

6.1.8 Chemical composition of soil and contained pore fluids,

6.1.9 Available funds,

6.1.10 Estimated cost,

6.1.11 Time constraints,

6.1.12 History of method performance under anticipated conditions (consult experienced users and manufacturers),

6.1.13 Site accessibility,

6.1.14 Decontamination requirements,

6.1.15 Grouting requirements, local regulations, and

6.1.16 Amount of and disposal costs for generated drill cuttings and drilling wastes.

## 7. Apparatus

7.1 *Sonic Head*—The sonic drill head contains a sine generator, sine generator drive mechanism, lubrication system to reduce friction and control heat in the head, vibration isolation device, drill string rotating mechanism, and a connection to the drill string. The sine generator must be capable of producing sufficient energy to force movement in the drill string to accomplish the fracturing, shearing or displacement necessary for the borehole to be advanced as shown in Fig. 1.

7.1.1 *Sine Generator*—The sine generator uses eccentric, counter rotating balance weights that are timed to direct 100 percent of the vibration at 0 degrees and at 180 degrees (Figs. 2 and 3). The sine generator is powered hydraulically and generally operates at frequencies between 0 and 185 hertz delivering a full range of energy outputs for advancement of up to 30.48 cm (12 in.) drill casing.

7.1.2 *Lubrication System*—The lubrication system is fitted with oil coolers of sufficient capacity to keep the hydraulic fluid at an allowable operating range as recommended by the oil supplier.

7.1.3 *Vibration Isolation System*—In order to transmit the maximum vibratory energy to the drill string and not damage the drilling rig the vibration applied to the drill tools must be isolated from the drill rig as shown in Figs. 2 and 3. This can be accomplished by using air charged springs, manual disk springs, or such other methods as will meet that goal.

7.2 *Drilling Tools*—A significant variety of tooling is necessary to accomplish the sonic drilling program. The tools consist of drill rods, drill casing, sampler barrels, sampler bits, casing bits, direct push sampling probes, borehole water sample collection systems, etc. Individual drillers and companies have in-house tooling designed for specific purposes and projects. If these specialized tools provide high quality sampling and efficient drilling processes they are acceptable to the practice.

7.2.1 *Drilling Rods and Casing*—Drilling rods are used to propel and recover the sampling barrels. Drill rods are the most handled tools. The common sizes are 5.08 cm (2.0 in.) to 10.16 cm (4.0 in.) O.D. × 60.98 cm (2.0 ft), 1.524 m (5.0 ft), 3.38 m (10.0 ft), and 6.096 m (20.0 ft) lengths. Annular space between casing and rod is not critical allowing the same sized drill rod to be used with various sized sampling barrels. Current sonic drilling technology can be used to set drill casing in various sizes from 1.27 cm (0.5 in.) up to 30.48 cm (12.0 in.) nominal depending on project requirements.



Copyright by ASTM Int'l (all rights reserved);
Reproduction authorized per License Agreement with Sheila Huck (PROSONIC Corporation); Thu Aug 18 14:24:31 EDT 2005

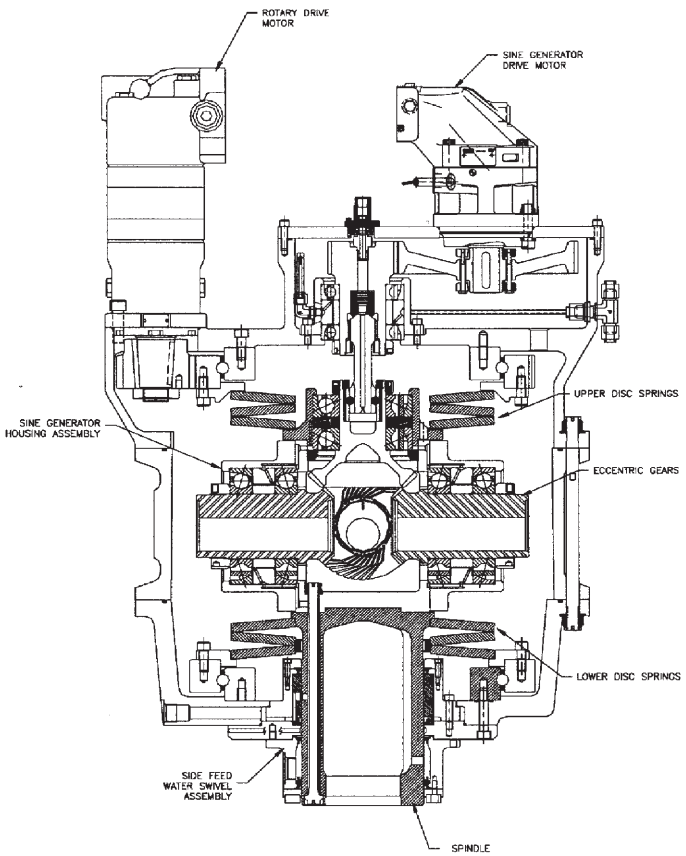


**□I□□□□□ical Sonic Drill □ead □ith Dis□ S□ring □or□ of Isolation S□ste□**

7.2.2 *Sampler Barrel*—Sampler barrels (a.k.a. core barrels) are used to recover formation specimens and to clean the inside of the drill casing. Sampler barrels are either solid tubes or split barrels of various diameters and lengths. The sampling barrels are generally sized to match the inside diameter of the various sizes of drill casing and to fulfill project requirements. The barrel is fitted with a drill bit□cutting shoe that holds the borehole alignment as it passes through the outer casing into the formation.

7.2.2.1 *Solid Barrels*—Solid sampler barrels are a solid length of tubing with thread sections on each end. They are available in various sizes and lengths. Typical sampling runs are 3.048 to 6.096 m (10.0 to 20.0 ft) in length. Sampling run length can be adjusted to provide the most optimum sample recovery. Sampler barrels can be joined to increase the length of sampling increment. In some formations there is a tendency to lose recovery with longer core run lengths while in others longer core runs may improve recovery. Samples of loose unconsolidated granular formations can be consolidated by the vibratory action. In loose or soft formations the inability of the soil structure to support the force necessary to move the material into the barrel can cause that material to be forced into the formation.

7.2.2.2 *Split Barrel Samplers*—Split barrel samplers are tubes that are split lengthwise with thread sections on both ends. The split sections utilize a tongue groove feature that interlocks to prevent lateral movement between the two halves of the tube. Split barrel samplers are available in various diameters and lengths. hile split barrel samplers provide a better format to view the specimen and may subject it to less disturbance, they do receive vibratory action during penetration. Depending on the method of construction, split barrels have a tendency to spread open in hard formations. They are quite heavy when fully loaded and may require special handling techniques. Liners, clear butyl or polyethylene based plastic, or stainless steel are available for use with split barrel and solid barrel samplers.

7.2.2.3 Standard formation sampling devices can be used in conjunction with the sonic drill rig for geotechnical applications. The standard penetration test D 1586 can be performed if the unit is equipped with a cathead or an automatic-hammer 63.523 kg (140 lb). The hydraulically activated, D 6519, as well as manual, fixed piston, thin wall tube samplers D 1587 can be used if the unit is equipped with a fluid pump of sufficient capacity. Sonic drills are generally equipped with winch lines for using sampling tools in geotechnical drilling programs.

7.2.3 *Casing Drill Bits*—Drill bits are attached to the leading section of drill casing. Their function is to provide a cutting edge to assist in moving the casing through the various formations encountered and to direct the movement of formation materials during the making of the boring. The face of the drill bit follows one of three basic directional designs: (□) "Crowd-in" move most of the material encountered at the drill



Copyright by ASTM Int'l (all rights reserved);
Reproduction authorized per License Agreement with Sheila Huck (PROSONIC Corporation); Thu Aug 18 14:24:31 EDT 2005

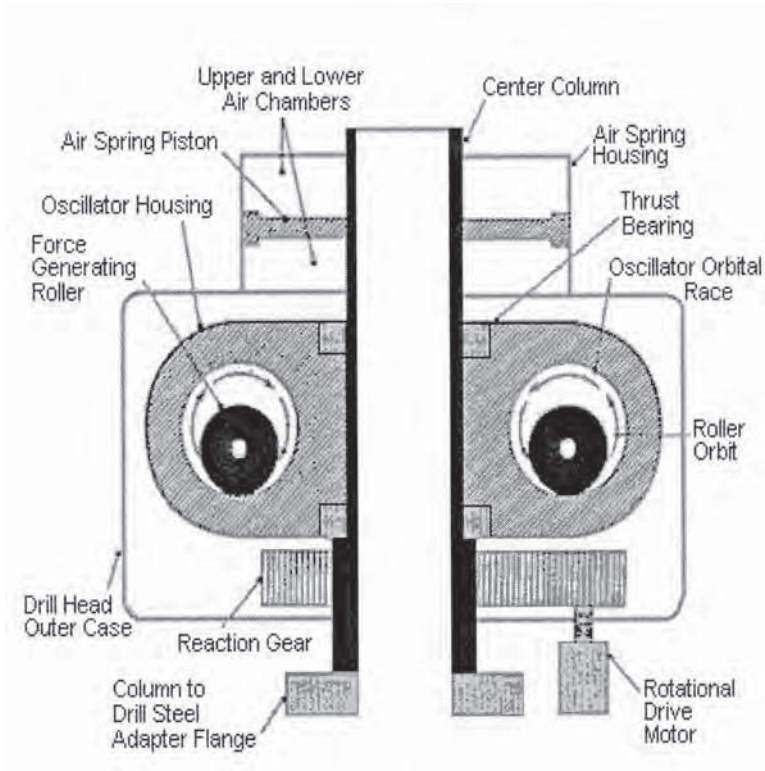


**□I□ □□ □□□ical Sonic Drill □ead □ith □ir S□ring □or□ of Isolation S□ste□**

face into the borehole or casing as it is advanced. This style of bit face provides the best service in dense, dry, or cohesive formations as it helps reduce formation compaction and friction; (□) "Crowd-out" moves most of the material encountered at the drill face into the borehole wall. This design works better in softer and more granular, sands, gravels, and silt formations; and (□) "Neutral" allows the bit face material to choose the path of least resistance. Different bit face configurations are used to effectively penetrate different formations. The general-purpose bit face is fitted with carbide buttons spaced equally across and around the bit face. Fig. 4 shows a typical carbide button faced bit. The carbide buttoned bit works well in most formations and is considered a general-purpose bit. Carbide buttons are well suited for the impact action that occurs in sonic drilling. Other configurations include welded carbide chips and blocks in a matrix, saw tooth shapes both hard surfaced and plain, and tearing shoe designs with large irregular carbides for working in construction debris and penetrating refuse in landfills. Each of these designs has a useful purpose and can be quite effective at penetrating their respective formations.

7.2.4 *Sample Barrel Bit*—The sample barrel bit is designed to both penetrate the formation and to shape the sample so it will pass through the bit into the sample barrel with the least amount of friction or compression. The bit may be constructed with serrated, carbide buttoned, or some other form of roughened inside diameter surface, or with a machined space for a retainer basket to assist in the retention of the sample. The interior of the sampler bit should have a minimum inside diameter 3.175 mm (0.125 in.) less than the inside diameter of the sampling barrel to allow the passage of the sample into the core barrel with the least amount of resistance so as to not impede recovery or create unnecessary disturbance to the sample. The cutting face of the bit used should be the design best suited to the formation being penetrated. For dense formations with cobbles and boulders a bit face with carbide

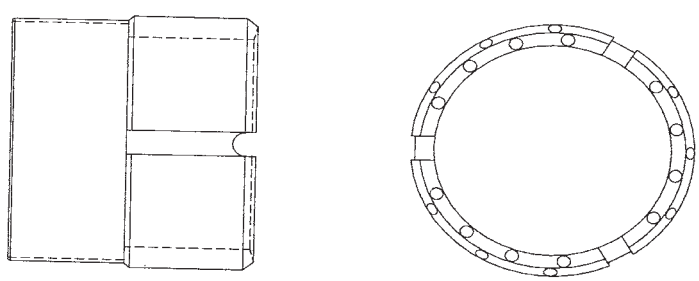

**□I□□4 Sonic Casing □it**



Copyright by ASTM Int'l (all rights reserved);
Reproduction authorized per License Agreement with Sheila Huck (PROSONIC Corporation); Thu Aug 18 14:24:31 EDT 2005

buttons may be used. For soft formations a serrated face, sharpened to force the cuttings away from the bit, works well. The choice of bit face type and sample retention method is governed by the characteristics of the formation and should be optimized as the borehole progresses to insure the highest recovery percentage with the least possible sample disturbance.

7.2.5 *Direct □ush Sampling Tools*—Sonic drilling is a direct push drilling method as well. Therefore, soil sampling, soil vapor sampling, and water sampling tools similar to those used in the direct push industry are also available to the sonic drilling practice. *In-situ* water sampling tools are constructed using a screened inner stem attached to a point that is surrounded by an outer drive pipe. The point is the same diameter as the outer drive pipe to prevent the creation of an enlarged annular space that could provide an avenue for cross contamination between aquifers. The inner screen assembly is sealed from the formation during installation by an outer drive pipe fitted with "o" rings. ith the friction of the soil holding the point in place while being driven to depth, the screen section is then exposed to the formation by pulling back on the outer drive pipe. The inner tube can have an inside diameter of 5.08 cm (2.0 in.) to 10.16 cm (4.0 in.) or larger to allow for larger capacity sampling pumps. Using higher capacity pumps accelerates the purging process and allows for rapid sampling from deep formations. The water sampling probes can be fitted with disposable points to allow for pressure grouting or installation of small diameter monitor wells.

7.3 *Sonic Drill □ig*—The sonic drill rig is similar to other drilling rigs in that it is a machine attached to a frame mounted on some form of carrier. The unit can be driven by a power take off assembly from the carrier engine or by an auxiliary engine. The unit has a feed frame for moving the drill head up and down to apply feed and retract pressure to the drill string and a mast for tool handling. Some units are equipped with automated tool handling devices. The sonic drill head is powered hydraulically. In addition to the sonic head, the feed system, drill fluid pumps, rod handling systems, and other auxiliary equipment demand power as well. Therefore, the power supply must be capable of providing the horsepower necessary to drive the system. The horsepower requirement is based on the desired productive capacity of the drill. The carrying vehicle must have sufficient gross vehicle weight to support the drill structure, rod handling equipment, fluid pumps, air compressors, and such tool storage as deck space allows.

7.3.1 *Drill Tower*—The drill rig may have a tower for extracting tools from the borehole. Tower lengths can vary, however, higher towers allow for longer tool pulls. The drill rig should have sufficient retraction power to lift a full-length string of the largest rated diameter drill tools from the deepest rated depth plus an additional 50 or more of that total weight.

7.3.2 *Tool □andling*—Sonic drills traditionally use several different sizes of tooling. The units are generally equipped with some form of tool handling devices. Some units are equipped with a pivotal sonic head. This allows the head to tilt up 90 degrees to vertical so drill rod or casing can be aligned to the spindle for mechanical attachment. The length is then raised and rotated back to vertical for attachment to the drill string. Other units use mechanical rod loaders which position drill rods or casing for hook up. ire rope winches can be used for drill rod tripping. Units using the winch method are generally fitted with a slide tray that can accommodate up to 6.096 m (20.0 ft) lengths of drill rod for reducing sample barrel retrieval time.

7.3.2.1 *Tool □oint □rench and □od □older Table*—A key component of the sonic drill is the tool joint make-up, breakout, and rod holding table. The upper vice of the tool joint should be capable of bi-directional rotation to both close and open the tool joints. The throat of the joint wrench must be large enough to accommodate the largest rated O.D. tooling of the drill. The throat clearance may be accomplished by jaw retraction or by installing different sized jaws. The lower jaw assembly and its supporting members should be capable of supporting the total weight of the maximum O.D tooling at the maximum depth rating of the machine. The upper jaw may include some form of high-speed rod spinning device to expedite rod disconnection.

7.3.3 *Au□iliary □quipment*—Sonic drill units require a fluid pump or pumps depending on the anticipated work program. The pumps serve many purposes; to push drilling fluids down the bore hole for lubrication and bit face cuttings removal while advancing the outer casing over core barrels in certain formations, when rock drilling to assist in the removal of cuttings, for bit cooling and cuttings removal while diamond bit rock coring, for mixing of drill fluids and grouts, for grouting of instrumentation, to grout (backfill) bore holes, and for equipment cleaning. Drill fluid injection is generally more predominate when installing casing in saturated granular formations to maintain pressure equalization than when drilling more cohesive formations. The primary purpose of injecting fluids is to keep the inside of the drilling casing clean as it is advanced over the sampling barrel. Normally drill fluids are not recycled during sonic drilling so volume generated is generally small. As the sonic drilled borings can go to considerable depth it is recommended that the unit have a least one positive displacement type pump. If a second fluid pump is desired, it should be capable of supplying 1380 kN□m$^2$ (200 psi) for mixing and for cleaning. Progressive cavity, or peristaltic pumps, work well for this purpose. All fluid pumps should be equipped with pressure indicating gauges and pressure relief valves set at the necessary level to protect the pumps from damage and to prevent fracturing of the formation. Air compressors are sometimes used in conjunction with sonic drilling. They are utilized when operating down hole hammers or other air drilling methods to penetrate formations not conducive to penetration by sonic methods. Pressure requirements are governed by tool requirements, depth, and bore diameter, see Guide D 5782. General tools needed to operate the sonic drill unit include rod lifting tools, pipe wrenches, fluid swivels, and handtools for general maintenance and repair. Other useful equipment would include portable or hydraulic powered arc welders, acetylene torches, steam cleaners, and portable generators. Portable fluid pumps and tanks are also useful for fluid containment and transfer.



Copyright by ASTM Int'l (all rights reserved);
Reproduction authorized per License Agreement with Sheila Huck (PROSONIC Corporation); Thu Aug 18 14:24:31 EDT 2005

7.4 *Expendable Supplies*—Expendable supplies are items such as monitor well materials, bentonite, cement, and their proper uses are described in referenced ASTM standards. They are not addressed in this practice.

## 8. Condition

8.1 *General*—Preparation of the sonic rotary drill unit for project work starts with a thorough check of the drill's operating system. This includes the inspection, testing, and repair of all emergency shutdown switches and other safety devices. The performance of regular routine maintenance procedures including fluid level checks, lubrication, hydraulic hose inspection, leakage repairs, and the inspection of the physical components with necessary repairs completed. A thorough cleaning of the drill unit is also recommended. Operating tools should be inspected, repaired if necessary, and inventoried, to insure that an adequate supply is on hand for the project. Drilling tools, casing, rods, bits, etc., should be checked for proper repair, and loaded in sufficient quantities to complete the project. It is recommended that additional tooling, beyond that required for the project, be taken to the site to reduce down time from breakage or damage, and to allow for increases in work effort that may occur because of site conditions.

NOTE 2—The items in Section 8 regarding inspection, cleaning, inventory, repair, storage, transportation, decontamination, equipment checks, and necessary supplies are primarily related to contractor efficiency. This is only a partial list of activities that are considered good drilling practice to prepare for drilling and are offered for consideration by users. It is recognized that strict conformance with these items is not imperative for sonic drilling and does not necessarily correlate to the quality of the work.

8.1.1 *Equipment Movement*—All tools, materials, and equipment needed for the project shall be loaded in a safe manner and secured in compliance with U.S. Department of Transportation, state, and local regulations. The drilling rig, support vehicles, and auxiliary equipment shall be brought to the project site fully fueled and ready for operation. Extra tooling, required instrumentation installation supplies, and other expendables should be stored in a central location in a safe and secure manner. The materials should be stored in a clean dry area in their original containers until transported to the decontamination area for cleaning if necessary or to the actual drill site for installation. All packaging debris, damaged or contaminated materials, and miscellaneous trash accumulate during drilling operations shall be containerized and disposed of properly.

8.2 *Decontamination*—If the drilling rig and tooling are to be used on a chemically contaminated site, site specific decontamination procedures must be followed. For general decontamination information refer to Practice D 5088 for recommended procedures.

8.3 *Sampling Barrels*—The sampling barrels are in various lengths, generally 1.532 m (5.0 ft), 3.048 m (10 ft), or 6.096 m (20 ft). Barrels should be in equal increments to facilitate the accuracy of borehole depth measurements. Sampling barrels are either solid or split styles.

8.3.1 *Solid Sampling Barrels*—Check the barrel thread section for thread condition, dents, kinks, or excessive wear that could result in the loss of the barrel or the sampling shoe, or in improper assembly that will result in a reduction of energy transfer. The barrel body should be straight, without dents or wrench burrs that could cause injury. The inside of the barrel should be clean, free of any debris, rust build-up, or any obstructions.

8.3.2 *Split Sampling Barrels*—Check barrel thread section for thread condition, dents, kinks or excessive wear that could result in the loss of the barrel or sampling shoe, or in improper assembly that will result in a reduction of energy transfer. The barrel body sections should be straight, without dents, kinks, or wrench burrs that could cause injury. The split tongue and grooves must be clean and free from dents, kinks or burrs. The split barrels halves should fit together snugly without bowing or spreading. The inside of the barrel halves must be clean and free of any obstructions.

8.3.3 *Sampler Barrel Heads and Bits*—Sampler barrel heads should be checked for thread condition to insure proper assembly to facilitate energy transfer. Sampler barrel bits are constructed in different configurations for use in the various formations encountered. The proper bit should be selected for the anticipated formation to be encountered. The cutting face should be free of dents, without cracks, non-manufactured grooves, or indentations. The interior of the bit should be free of obstructions that would impede the movement of the sample in the barrel. Designs in the bit to aid in recovery are permitted. Bits designed for use with basket retainers should have clean undamaged shoulders for receiving basket retainers. Check to see that the required tolerance is present.

8.3.4 *Drilling Without Sampling*—When sonic drilling without sampling is desired the solid sampling barrel bit can be modified to incorporate a drive point. When the maximum boring depth is reached, the sampling barrel is over drilled with the casing to depth and the sampling barrel is removed before setting instrumentation. If a disposable drive point is used, the sampling barrel is withdrawn the length of the point and the point knocked out. Then borehole activities such as water sampling and setting monitor wells or other devices can be accomplished.

8.3.5 *Tool Selection*—Prior to dispatch to the project site, an inventory of the necessary tooling in the proper sizes, expendable items, and instrumentation supplies should be made. Drilling is an inexact science and as such planning should include provisions for possible contingencies that may arise based on the knowledge one can gather about the project and the geology of the site. Routinely used supplies such as drill casing and sample barrel bits, rod lifters, environmentally safe thread lubrication, sampler barrel couplers, and project specific materials should be available so work can proceed unimpeded. If using split barrels or thin wall tubes a sufficient number should be on hand so sample examination does not delay drilling. Expendable supplies such as sample retainer baskets, sample storage bags, or other containers, and other project specific materials should to be available in sufficient quantities so work can progress smoothly. Specialized sampling tools, necessary for project specific requirements, should be checked, cleaned and available in the required number. Refer to Guide



Copyright by ASTM Int'l (all rights reserved);
Reproduction authorized per License Agreement with Sheila Huck (PROSONIC Corporation); Thu Aug 18 14:24:31 EDT 2005

D 420 for additional information on soil sampling tool selection. Materials for proper sealing of boreholes should always be available at the site.

## 9. Procedure

9.1 *General Set Up*—A safety meeting and site/project information meeting is held. A complete set of job safety analyses procedures is reviewed; Utility clearance information is reviewed. The drill crew puts on the required personal protective safety gear. The drill foreman makes a general site reconnaissance and specifically reviews the borehole location before moving any equipment onto the site. All underground and overhead utilities locations are checked and all members of the drill crew receive knowledge of their whereabouts. Any overhead obstructions that may impede drill rig setup and operation are noted. The travel path to the boring location is evaluated for the safe movement of the equipment. Move the drill rig and service vehicles to the borehole location. Unload any auxiliary equipment or supplies from the drill that would interfere with the rig setup. Level the drill unit. The leveling jacks should have sufficiently sized ground contact pads to spread the load and prevent settling during drilling that can cause misalignment of the drill tools. Once the drill is level, raise and secure the mast. If drilling fluids are to be collected position a fluid containment vessel. Position the service vehicles as necessary for efficient tool handling and drilling support. Hook up any pumps, hoses, and position working tools as necessary.

9.1.1 *Drilling Methods*—Sonic drilling can be performed wet, using a drilling medium, or dry. The choice of method is determined by project requirements, formations to be penetrated, and the depth to be achieved. In sonic drilling, the sampling barrel is advanced dry except for those occasions when actual rock or concrete penetration is occurring and drill-cutting removal is necessary to prevent tool lockup. Bouldery formations and weathered bedrock can be drilled dry as long as they will allow the cuttings at the bit face to be forced into the formation without friction causing excessive heat or impeding penetration of the formation. Drilling progresses by fracturing, shearing, or displacement. Fracturing occurs when drilling through formations with cobbles, boulders, or rock formations. Shearing occurs when penetrating dense silt, clay, or soft shale. Displacement occurs in granular formations when the material is liquefied and moves away from the bit and casing, or up the casing or sampling barrel. In sonic drilling, as in other drilling practices, a combination of methods may be necessary to complete the project.

9.1.2 *Tool Preparation*—Attach the proper bit for the formation anticipated to the sampling barrel. Connect the sampling barrel to the drill head and tighten the drill bit and the sampling barrel to the drill head. Check the plumb of the casing in relation to the drill rig. The pre-torquing, or tightening of rod joints is essential to the transmission of energy through the rod string when using sonic technology. All drill rod and casing joints should be pre-torqued to the manufactures rated capacity and/or to a level equal to the maximum amount of force that the sonic head can impart. Failure to do so can result in a loss of energy as well as damage to the threaded joint and/or loss of tooling. It is generally necessary to rotate the drilling casing to provide for even bit wear, control borehole alignment, and to facilitate removal of the casing and samplers from the borehole on completion. Slow rotation speed is satisfactory as speed is not a controlling factor in advancing the tools. In certain formations rotation of the sampling barrel during core sampling may be necessary.

9.2 *Sample Barrel Insertion*—Advance the sample barrel into and through the topsoil, pavement, or other surface material. ithdraw the sampler from the borehole and remove initial penetration material. Reinsert the sampling barrel, apply down pressure, activate the sine generator, and began rotation if needed. Note bottom limit of penetration and adjust as needed by using various rod lengths to achieve desired sampling increment end point. It is desirable to end sample increments at the even meter (foot), or centimeter (one-half foot) increments for ease of bore hole measurements. Accurate measurements are critical to determine recovery, locate strata changes, and determine proper instrumentation location in the borehole.

9.2.1 *Sampling-Solid Barrel*—At the completion of the sampling run, stop down pressure, stop the sine generator and any rotation of the sampling barrel. If necessary disconnect from the sampling barrel and install casing over the sampling barrel. Extract the sampling barrel from the borehole using the drill head or such other method as will expedite the movement of the sampling barrel to the surface. At the surface, reattach the sampling barrel to the sine generator and position the sampling barrel to remove the sample. Remove the bit, protecting the bottom of sampling barrel to prevent any material from dropping out. Remove any material in the sampling bit and place it in the sample receiving bag in the correct orientation. Slide the sample bag over the sampling barrel the full remaining length of the bag so the sample does not fall. Allow the sample to flow into the bag by activating the sine generator as needed to vibrate the sample from the barrel. eep the sample bag as close to the bottom of the sample barrel as possible while it fills to reduce sample dropping distance causing as little disturbance as possible. Samples are generally deposited in 61 m (2.0 ft) to 1.524 m (5.0 ft) length plastic bags for review, logging and analysis. Sample bag length should not exceed 1.524 m (5.0 ft) as the weight of the specimen collected becomes very difficult to handle without causing excessive disturbance. Change sample bags as needed until all sample is removed from the barrel. It is important that all material collected be contained for recovery measurements and for disposal. Accurate measurements of sample recovery are achievable with the solid barrel sampling method of sample collection if certain practices are followed. In some formations more precise measurements of recovery can be made using clear plastic sampler liners. Hydraulic extraction of the sample from the solid barrel sampler can also be utilized in some formations. The nature of sonic vibration and bit face displacement can cause some disturbance in granular and in other soils. This should be kept in mind when measuring recovery and examining core samples. Such measurements are best judged by experienced equipment operators and knowledgeable field logging personnel who are knowledgeable in recognizing the



Copyright by ASTM Int'l (all rights reserved);
Reproduction authorized per License Agreement with Sheila Huck (PROSONIC Corporation); Thu Aug 18 14:24:31 EDT 2005

differences in disturbed verses non-disturbed formation materials. Clean the sampling barrel by flushing with clean water or decontaminating as necessary. If project needs require full decontamination remove the used sampling barrel to the decontamination area, attach a cleaned sampling barrel to the drill head, add the drill bit and tighten it, and reinsert the sample barrel into the borehole to the depth of the previously sampled increment. Repeat the sampling process. It may be advantageous to rotate the sampling barrel as is withdrawn from the borehole to aid in extraction. However, rotation during extraction should only be used when necessary to retrieve the sampling tools to avoid disturbing the sample or causing it to fall from the sampling barrel. In some formations it may be necessary to activate the sine generator to facilitate withdrawal of the sample barrel. Once the sample is collected however, any action applied could cause disturbance to the sample. All such actions should be avoided wherever possible.

9.2.2 *Sampling-Split Barrel*—The procedure for using split barrel samplers is the same as solid barrel samplers except that the split barrel design it is not able to accept heavy down pressure or high friction resistance rotation. The limits of the split barrel are easily exceeded and caution must be exercised when utilizing these tools. Split barrel samplers offer the potential for reducing sample disturbance as the sample is removed from the core barrel. Sample removal and cleaning follow the procedures in referenced ASTM standards. Measuring sample recovery may be more accurate with the split barrel as result of generally shorter run length and the ability to visibly observe the material being measured in the barrel before it is removed.

9.3 *Drilling with Casing*—It is generally necessary to stabilize the borehole with an outer casing to control caving or slough, to facilitate sample collection, to protect against aquifer cross contamination, to provide a controlled environment for well or instrumentation installation, and to insure proper bottom up grouting. Casing is either installed using drilling fluid or installed dry depending on the formation being penetrated. Casing is available in a variety of lengths and diameters common to the drilling industry to fit a range of project requirements. The casing is either advanced over the sampling barrel when using drilling fluid or after the sample barrel has been removed from the borehole when drilling dry. Proportional sizing of the sampling barrel to the casing is required to insure that the casing is properly cleaned.

9.3.1 *Drilling Casing □et*—Various drilling fluids can be used to advance the casing ranging from clean potable water to specialized drilling fluids. The choice of fluid is dictated by the formation and the project requirements. There is generally no recirculation of the drilling fluid during sonic drilling. The drilling fluid serves several functions. It helps keep debris and drill cuttings from entering the casing; it provides a lubrication film between the outside of the casing and the formation materials; It removes drill cuttings from the face of the bit and from the borehole annulus; and the fluid helps to keep the sample barrel and the casing from becoming sand locked as the casing passes over the barrel. It is important that the annular space between the sampler barrel and the casing bit be kept to a minimum. This prevents material from moving into the annular space, reduces the amount of drilling fluid needed, and helps maintain borehole alignment. The drilling fluid is also used to maintain a pressure equalization head inside the casing to prevent any inflow of formation materials.

9.3.1.1 *Casing Insertion □et*—The sampling barrel is advanced to the required depth increment as described previously. The drill head is disconnected from the sampling rod string. A plug is placed in the drill rod box to protect the threads and prevent any drill fluid from entering the sampling rod string. An equal length of drill casing is attached to the drill head and hoisted into position over the sampling rod string. As the casing is advanced using downpressure, rotation and vibration, drilling fluid is pumped into the casing string. The casing is advanced to the base of the sampling barrel shoe. Advancement is stopped. The drill head is disconnected from the casing and reconnected to the sampling barrel tool string. The sampling barrel is then removed and the sample extracted. The sampling barrel is cleaned and then reinserted, additional drill string added, and the sample barrel advanced to the next increment. Then the casing installation procedure is repeated. There is a slight amount of contact between the top of the sampling increment and the drilling fluid when the sample barrel is withdrawn. However, as no drilling fluid is recycled, the composition of the drilling fluid remains known and controlled. As soon as the sample specimen begins to enter the barrel the fluid in the barrel is pushed upward and the sides of the sample barrel are sweep clean by the friction of the passing soil.

9.3.1.2 *Bore □ole Slough or Cave-In*—As with all drilling methods there are times when special techniques are needed to maintain control of the bore hole. In certain formations, if the head pressure in the borehole is not equalized, the ground water will carry formation materials in as it equalizes in the borehole. If project constraints do not allow the adding of compensating fluids other techniques must be employed. To provide room for the deposited material a second sampling barrel can be added on top of the first. As the materials are essentially liquefied along the barrel surface there is relatively little influence exerted on the lower portions of the sample from the upper portions. However, to insure sample quality and integrity every effort should be made to eliminate as much cave-in as possible.

9.3.1.3 *Drilling Casing Dry*—□hen installing casing dry, advance the sampling barrel through the scheduled interval. Remove the sample barrel and process the sample. Connect the drill head to the casing and advance the casing to the bottom of the previously sampled increment. Disconnect from the casing. Insert the sample barrel and vibrate through the borehole material in the casing to the top of the next scheduled sampling increment. Remove the sampling barrel and clean it in accordance with project requirements. Reinsert the sampling barrel and advance it to the end of the next sampling increment. Then repeat the procedure. In certain formations a double length sample barrel can be utilized to both remove the borehole material and to continuously sample the next increment in one tool trip. henever slough is encountered in the borehole it should be measured and properly noted on the boring log.



Copyright by ASTM Int'l (all rights reserved);
Reproduction authorized per License Agreement with Sheila Huck (PROSONIC Corporation); Thu Aug 18 14:24:31 EDT 2005

Determining the need for cleanout runs with the core barrel is primarily a driller skill.

9.4 *Bore □ole Testing*—The sonic drilling method lends itself well to many forms of borehole testing in most formations primarily because of the clean cased hole provided and from the versatility of the machine. Actual procedures for water and aquifer testing, or other formation properties investigation procedures are given in referenced ASTM standard and will not be individually addresses here. The very high level of energy that can be imparted to the drill bit by the sonic drill gives it the ability to advance casing and core barrels into very dense formations. In these dense formations, when drilling dry, the borehole wall may be affected by the forcing of soil particles into it. Should this condition be of concern it can be alleviated by using potable water injection while advancing the casing, by using a crowd in style bit that directs materials sheared from the borehole wall into the casing, by borehole wall scraping with the casing bit, or by injecting natural clay breakdown compounds.

9.4.1 Pump testing to determine aquifer characteristics, Test Method D 4050, is easily accomplished because of the clean hole and the minimal disturbance that is caused to the formation. This results in a rapidly clearing formation that reaches its maximum production rate quickly. Minimum turbidity with rapid production results in less development water for disposal and expedited test results. This is especially significant when setting smaller diameter wells, which can only accommodate low volume pumps. Slug tests, Test Method D 4044, can also readily be preformed because of the clean borehole wall.

9.4.2 □*ell Installation*—□ ells, Practice D 5092, of various sizes can be set using the sonic method. Advantages are that in many formations the casing in the screened zone can be set without fluid to keep the formation clean and to reduce development and□or pumping time. The vibratory effect can be used to good advantage to settle filterpack material around the screen and eliminate bridging of backfill materials as the casing is removed.

9.4.3 □*ther Instrumentation*—Any type of instrumentation that can be set with any other drilling method can be set with sonic drilling. *In-situ* borehole tests such as pressure meters D 4719, vane shear devices D 2573, permeability testing using packers D 4630, etc., can be used with the sonic method as long as the borehole wall is prepared in accordance with the proper ASTM standard. hen utilizing these types of testing methods it may be necessary to advance the casing into the borehole using water injection and a crowd in bit to minimize sonic drilling's effect on soil pore pressure.

9.5 *Incorporating □ther Drilling □ractices*—The sonic drill rig easily accommodates other drilling methods should they be needed to satisfactorily complete projects. Rock coring adaptations can be incorporated to do diamond bit coring either wireline or conventional. Sonic drills generally have low rotary rpm ratings. Adequate speeds for rock coring can be acquired through a gear driven speed multiplier, a high-speed coring head, 2-speed rotation motors, or if available, adjustment to the rotational output of the sonic drill head. Downhole hammers can be readily adapted to the sonic drill with the incorporation of a compressed air source. The low rpm rating works very well with downhole hammer. As the sonic drill offers all basic drill functions air or fluid rotary techniques can be easily adapted as well. Standard soil sampling techniques can be utilized with the sonic drill. Split barrel sampling with standard penetration tests, thin walled tubes, and the like can be easily incorporated.

## 1□. □omp□et□on □nd Se□□n□

10.1 Information on the sealing of boreholes can be found in Guide D 5299, and in Guides D 5781, D 5782, D 5783, and D 5784. State or local regulations may control both the method and the materials for borehole sealing.

## 11. Record □eep□n□

11.1 □*ield □eport*—The field report may consist of boring log or a report of the sampling event and a description of the sample. Soil samples can be classified in accordance with Practice D 2488 or other methods as required for the investigation. Prepare the log in accordance with Guide D 5434, which lists the parameters required for the field investigation program. List all information related to drilling and the sampling event, including depth, fluid injection, drilling parameters, sampling Intervals, recovery, strength index readings such as pocket pentrometer, classification of soil, and any comments on sampler or casing advancement. If a computer collects drill performance data, add identifying marks to log so correct information can be downloaded and incorporated into the final log as necessary.

## 12. □e□□ords

12.1 drilling; resonance; soil and rock sampling; sonic; subsurface exploration

*ASTM International takes no position respecting the validity of any patent rights asserted in connection with any item mentioned in this standard. Users of this standard are expressly advised that determination of the validity of any such patent rights, and the risk of infringement of such rights, are entirely their own responsibility.*

*This standard is subject to revision at any time by the responsible technical committee and must be reviewed every five years and if not revised, either reapproved or withdrawn. Your comments are invited either for revision of this standard or for additional standards and should be addressed to ASTM International Headquarters. Your comments will receive careful consideration at a meeting of the responsible technical committee, which you may attend. If you feel that your comments have not received a fair hearing you should make your views known to the ASTM Committee on Standards, at the address shown below.*

*This standard is copyrighted by ASTM International, 100 Barr Harbor Drive, PO Box C700, West Conshohocken, PA 19428-2959, United States. Individual reprints (single or multiple copies) of this standard may be obtained by contacting ASTM at the above address or at 610-832-9585 (phone), 610-832-9555 (fax), or service@astm.org (e-mail); or through the ASTM website (www.astm.org).*



Copyright by ASTM Int'l (all rights reserved);
Reproduction authorized per License Agreement with Sheila Huck (PROSONIC Corporation); Thu Aug 18 14:24:31 EDT 2005

Designation: D 5434 – 97

# Standard Guide for Field Logging of Subsurface Explorations of Soil and Rock[1]

This standard is issued under the fixed designation D 5434; the number immediately following the designation indicates the year of original adoption or, in the case of revision, the year of last revision. A number in parentheses indicates the year of last reapproval. A superscript epsilon (ε) indicates an editorial change since the last revision or reapproval.

## 1. Scope

1.1 This guide describes the type of information that should be recorded during field subsurface explorations in soil and rock.

1.2 This guide is not intended to specify all of the information required for preparing field logs. Such requirements will vary depending on the purpose of the investigation, the intended use of the field log, and particular needs of the client or user.

1.3 This guide is applicable to boreholes, auger holes, excavated pits, or other subsurface exposures such as road side cuts or stream banks. This guide may serve as a supplement to Guide D 420.

1.4 This guide may not be suited to all types of subsurface exploration such as mining, agricultural, geologic hazardous waste, or other special types of exploration.

1.5 *This standard does not purport to address all of the safety concerns, if any, associated with its use. It is the responsibility of the user of this standard to establish appropriate safety and health practices and determine the applicability of regulatory limitations prior to use.*

1.6 *This guide offers an organized collection of information or a series of options and does not recommend a specific course of action. This document cannot replace education or experience and should be used in conjunction with professional judgment. Not all aspects of this guide may be applicable in all circumstances. This ASTM standard is not intended to represent or replace the standard of care of which the adequacy of a given professional service must be judged, nor should this document be applied without consideration of a project's many unique aspects. The word "Standard" in the title of this document means only that the document has been approved through the ASTM consensus process.*

## 2. Referenced Documents

2.1 *ASTM Standards:*

D 420 Guide to Site Characterization for Engineering, Design, and Construction Purposes

D 653 Terminology Relating to Soil, Rock, and Contained Fluids[2]

D 1452 Practice for Soil Investigation and Sampling by Auger Borings[2]

D 1586 Method for Penetration Test and Split-Barrel Sampling of Soils[2]

D 1587 Practice for Thin-Walled Tube Geotechnical Sampling of Soils[2]

D 2113 Practice for Diamond Core Drilling for Site Investigation[2]

D 2488 Practice for Description and Identification of Soils (Visual-Manual Procedure)[2]

D 2573 Test Method for Field Vane Shear Test in Cohesive Soil[2]

D 3441 Test Method for Deep, Quasi-Static, Cone and Friction/Cone Penetration Tests of Soil[2]

D 3550 Practice for Ring-Lined Barrel Sampling of Soils[2]

D 4083 Practice for Description of Frozen Soils (Visual-Manual Procedure)[2]

D 4220 Practices for Preserving and Transporting Soil Samples[2]

D 4403 Practice for Extensometers Used in Rock[2]

D 4544 Practice for Estimating Peat Deposit Thickness[2]

D 4622 Test Method for Rock Mass Monitoring Using Inclinometers[2]

D 4623 Test Method for Determination of In Situ Stress in Rock Mass by Overcoring Method—USBM Borehole Deformation Gage[2]

D 4633 Test Method for Stress Wave Energy Measurement for Dynamic Penetrometer Testing Systems[2]

D 4645 Test Method for Determination of the In-Situ Stress in Rock Using the Hydraulic Fracturing Method[2]

D 4719 Test Method for Pressuremeter Testing in Soils[2]

D 4750 Test Method for Determining Subsurface Liquid Levels in a Borehole or Monitoring Well (Observation Well)[2]

D 4879 Guide for Geotechnical Mapping of Large Underground Openings in Rock[2]

D 5079 Practices for Preserving and Transporting Rock Core Samples[3]

## 3. Terminology

3.1 *Definitions:*

[1] This guide is under the jurisdiction of ASTM Committee D-18 on Soil and Rock and is the direct responsibility of D18.07 on Identification and Classification of Soils.

Current edition approved December 10, 1997. Published July 1998. Originally published as D 5434 – 93. Last previous edition D 5434 – 93.

[2] *Annual Book of ASTM Standards*, Vol 04.08.

[3] *Annual Book of ASTM Standards*, Vol 04.09.

Copyright © ASTM, 100 Barr Harbor Drive, West Conshohocken, PA 19428-2959, United States.

3.1.1 Except as listed below, all definitions are in accordance with Terminology D 653.

3.2 *Description of Term Specific to This Standard:*

3.2.1 *field log*—a record prepared during subsurface explorations of soil and rock to document procedures used, test data, descriptions of materials and depths where encountered, ground water conditions, and other information.

## 4. Summary of Guide

4.1 This guide describes the type of information that should be recorded during the execution of field subsurface explorations in soil and rock. The information described relates to the project, personnel, methods of investigation and equipment used, visual description of subsurface materials and ground water conditions, in-situ testing, installation of monitoring equipment, and other data that may be appropriate.

## 5. Significance and Use

5.1 The preparation of field logs provides documentation of field exploration procedures and findings for geotechnical, geologic, hydrogeologic, and other investigations of subsurface site conditions. This guide may be used for a broad range of investigations.

5.2 The recorded information in a field log will depend on the specific purpose of the site investigation. All of the information given in this guide need not appear in all field logs.

## 6. Summary of Work

6.1 Soil and rock field logs should include the following written information:

6.1.1 Project information should include:

6.1.1.1 Name and location of the project or project number, or both,

6.1.1.2 Name of personnel onsite during the exploration, such as drilling crew, supervisor, geologist, engineer, and technicians,

6.1.1.3 Names and addresses of organizations involved,

6.1.1.4 Name of person(s) preparing log,

6.1.1.5 Reference datum for project if available and description of datum, and

6.1.1.6 General remarks as appropriate.

6.1.2 Exploration information should include:

6.1.2.1 Exploration number and location (station and coordinates if available and applicable, position relative to a local permanent reference which is identified, or markings of exploration location),

6.1.2.2 Type of exploration, such as drill hole, auger hole, test pit, or road cut,

6.1.2.3 Date and time of start and finish,

6.1.2.4 Weather conditions including recent rain or other events that could affect subsurface conditions,

6.1.2.5 Depth and size of completed exploration,

6.1.2.6 The condition of exploration prior to and after backfilling or sealing, or both, and

6.1.2.7 Method of backfilling or sealing exploration, or both.

6.1.3 Explorations by drill hole or auger hole should include the following drilling information:

6.1.3.1 Type and make (manufacture and model if known) of drilling machine or description and name of contractor,

6.1.3.2 Method of drilling or advancing and cleaning the borehole. State if air, water, or drilling fluid is used. Describe type, source of water and additives, concentration, and tests performed on fluid,

6.1.3.3 Size, type, and section length of drilling rods (rod designations should conform with Table 3 of Method D 2113) and drilling bits used.

6.1.3.4 Dates and times of each stage of operation and time to complete intervals,

6.1.3.5 Size of hole (diameter and depth),

6.1.3.6 Ground elevation at top of borehole,

6.1.3.7 Orientation of drill hole, if not vertical (azimuth or bearing and angle),

6.1.3.8 Size and description of casing, if appropriate, method of casing installation (driven, drilled, or pushed) and depth of cased portion of boring (casing size designations should conform with Table 2 of Method D 2113), hollow-stem augers,

6.1.3.9 Methods used for cleaning equipment or drilling tools, or both, when required, and

6.1.3.10 Describe and state depth of any drilling problems such as borehole instability (cave in, squeezing hole, flowing sands), cobbles, lost drilling fluid, lost ground, obstruction, fluid return color changes, and equipment problems.

6.1.4 Exploration by test pit, road cut, stream cut, etc., should include:

6.1.4.1 Method of exploration,

6.1.4.2 Equipment used for excavation,

6.1.4.3 Type of shoring used, and

6.1.4.4 Excavation problems: instability of cut (sloughing, caving, etc.), depth of refusal, difficulty of excavating, etc.

6.1.5 Subsurface information should include:

6.1.5.1 Depth of changes and discontinuities in geologic material and method used to establish change (such as Practice D 4544).

6.1.5.2 Description of material encountered with origin or formation name, if possible, and type of samples used for description. The system or method of soil (such as Practices D 2488 and D 4083) or rock description should be referenced.

6.1.5.3 Description of nature of boundary between strata (gradual or abrupt, as appropriate) and other relevant structural features such as breccia, slickensides, solution zones, discolorations by weathering or hydrothermal fluids, and other stratigraphic information.

6.1.6 Soil or rock sampling and testing information should include:

6.1.6.1 Depth of each sample and number (if used),

6.1.6.2 Method of sampling (reference to appropriate ASTM standard, for example, Practice D 1452, Test Method D 1586, Method D 1587, Practice D 3550, or other method).

6.1.6.3 Description of sampler: inside and outside dimensions, length, type of metal, type of coating, and type of liner.

6.1.6.4 Method of sampler insertion: pushed, cored, or driven,

6.1.6.5 Sampler penetration and recovery lengths of samples (rock quality designation (RQD) and rate of coring in the case of rock),

6.1.6.6 Method of sample extrusion. Mark direction of extrusion,

6.1.6.7 Method of preserving samples and preparing for transport (refer to Practices D 4220 or D 5079),

6.1.6.8 Mark top and bottom of samples and orientation, if possible,

6.1.6.9 Depth and description of any in-situ test performed (reference to applicable ASTM standard, for example, Test Methods D 1586, D 2573, D 3441, D 4623, D 4633, D 4645, D 4719, or other tests if applicable),

6.1.6.10 Description of any other field tests conducted on soil and rock during the exploration such as pH, hydraulic conductivity, pressuremeter geophysical, pocket penetrometer, soil gas/vapor analysis, or other tests, and

6.1.6.11 Destination or recipient of samples and method of transportation.

6.1.7 Ground water information should include:

6.1.7.1 Depths and times at which ground water is encountered, including seepage zones, if appropriate,

6.1.7.2 In the case of drilling using drilling fluid, depth of fluid surface in boring and drilling depth at the time of a noted loss or gain in drilling fluid,

6.1.7.3 Depth to ground water level at the completion of drilling and removal of drill steel and description of datum (note condition of borehole, for example, cased or uncased). Date and time measured,

6.1.7.4 Depth to ground water level at some reported time period following completion of drilling and description of datum, when possible.

6.1.7.5 Method or equipment used to determine depth of ground water level, such as Test Method D 4750,

6.1.7.6 Method and depth of ground water samples obtained, including size of samples taken and description of sampler, and

6.1.7.7 Description of any field tests conducted on ground water samples such as pH, temperature, conductivity, turbidity, or odor.

6.1.8 Information regarding installation of instrumentation or monitoring equipment should include:

6.1.8.1 Type of equipment installed, for example, piezometers, monitoring well screens, inclinometer, including sizes and types of materials,

6.1.8.2 Depth and description of equipment installed (reference to applicable ASTM standard, for example, Test Method D 4622, Practice D 4403, or other standards or procedures),

6.1.8.3 Methods used for installation of equipment and method used for sealing annular space, and

6.1.8.4 Methods used to protect equipment (casing cap or locks).

6.2 Soil and rock field logs should include the following pictorial information:

6.2.1 Maps, drawings, or sketches of area of exploration and subsurface surfaces observed. Include pertinent surface information such as neighboring outcrops, as appropriate. Describe system of mapping, such as Guide D 4879 for rock, or legend for symbols of materials. Include dimensions, directions, and slopes, and

6.2.2 Photographs of activities, surfaces, or core. Describe sequence, dates and time, direction, objects used for scale, and subject.

## 7. Keywords

7.1 drilling; explorations; geologic investigations; ground water; logging; preliminary investigations; sampling; soil investigations; subsurface investigations

*The American Society for Testing and Materials takes no position respecting the validity of any patent rights asserted in connection with any item mentioned in this standard. Users of this standard are expressly advised that determination of the validity of any such patent rights, and the risk of infringement of such rights, are entirely their own responsibility.*

*This standard is subject to revision at any time by the responsible technical committee and must be reviewed every five years and if not revised, either reapproved or withdrawn. Your comments are invited either for revision of this standard or for additional standards and should be addressed to ASTM Headquarters. Your comments will receive careful consideration at a meeting of the responsible technical committee, which you may attend. If you feel that your comments have not received a fair hearing you should make your views known to the ASTM Committee on Standards, at the address shown below.*

*This standard is copyrighted by ASTM, 100 Barr Harbor Drive, PO Box C700, West Conshohocken, PA 19428-2959, United States. Individual reprints (single or multiple copies) of this standard may be obtained by contacting ASTM at the above address or at 610-832-9585 (phone), 610-832-9555 (fax), or service@astm.org (e-mail); or through the ASTM website (www.astm.org).*

*S□□□□-□*

BURMISTER CLASSIFICATION S□STEM

# BURMISTER CLASSIFICATION SYSTEM

## PURPOSE

The purpose of this Standard Operating Procedure (SOP) *Burmister Classification System* is to classify inorganic soils at the Troy Mills Landfill Superfund Site in Troy, New Hampshire.

Classifying inorganic soils by the Burmister system is very simply making decisions on the three major constituents in an orderly fashion.

Note: Field staff needs to check with the project manager before conducting field work to confirm if the client wants a different procedure to be followed.

## EQUIPMENT AND MATERIALS

- Personal protective clothing and gear (e.g., gloves, safety glasses);
- Field book; and
- Boring log / well construction details, including drilling method.

## PROCEDURES

Decision No.1 - Identify the major component of the soil matrix by the names in the following table:

| COMPONENT· | NAME | PROPORTIONAL TERM | PERCENT BY WEIGHT OF TOTAL |
|---|---|---|---|
| Major | GRAVEL | | |
| | SAND | | 50 or More |
| | FINES | | |
| Minor | Gravel | and | 35-50 |
| | Sand | some | 20-35 |
| | Fines | little | 10-20 |
| | | trace | 1-10 |

After identifying the major component, expand on it.

Example: Major component is SAND. Identify what SAND fractions are present using the table below and expand the name to fine to medium SAND or fine SAND, etc. If the major component is "FINES" go to decision No. 3 table.

Copyright© 2010 GZA GeoEnvironmental, Inc.

| GRADATION DESIGNATIONS | PROPORTIONS OF COMPONENT |
|---|---|
| fine | Less than 10% coarse and medium |
| medium | Less than 10% coarse and fine |
| fine to medium | Less than 10% coarse |
| medium to coarse | Less than 10% fine |
| fine to coarse | All greater than 10% |

Decision No.2 - Identify the major component or components of this soil matrix using the above table in Decision No. 1. Identify the relative proportion compared to the total and give it a term.

Example: Minor component is "fines." The relative proportion to the total is about 15 percent; therefore, the term "LITTLE" would be selected.

| PLASTICITY | PLASTICITY INDEX | IDENTITY | SMALL THREAD DIAMETER ROLLED* |
|---|---|---|---|
| Non-plastic | 0 | SILT | None |
| Slight | 1-5 | Clayey SILT | ¼” |
| Low | 5-10 | SILT & CLAY | 1/8” |
| Medium | 10-20 | CLAY SILT | 1/16” |
| High | 20-40 | Silty CLAY | 1/32” |
| Very High | >40 | CLAY | 1/64” |

Note: In order to determine a thread diameter, the moisture content may have to be adjusted by wetting or drying to a pliable/rollable state.

Example: The smallest thread diameter that can be rolled is 1/16-inch. The component identity would be CLAY & SILT. If it is a minor component, it should have a proportional term, say:

gray, fine to medium SAND, some Clay & Silt

Decision No.4 - Identify the relative density (non-plastic soils) or the consistency (plastic soils) using the table below based on standard penetration resistance.

| NON-PLASTIC SOILS | | PLASTIC SOILS | |
|---|---|---|---|
| Blows/ft “N” | Relative Density | Blows/ft “N” | Consistency |
| 0-4 | Very Loose | <2 | Very Soft |
| 4-10 | Loose | 2-4 | Soft |
| 10-30 | Medium Dense | 4-8 | Medium |
| 30-50 | Dense | 8-15 | Stiff |
| >50 | Very Dense | 15-30 | Very Stiff |
| | | >30 | Hard |

Copyright© 2010 GZA GeoEnvironmental, Inc.

Final Examples:

1. A soil matrix consists of approximately 60 percent fine to medium SAND, 15 percent Gravel and 25 percent fines that can be rolled to a 1/4-inch thread. The blows/ft (N) is 30.

   Classification: Dense, gray, fine to medium SAND, some Clayey Silt, little fine Gravel.

2. A soil matrix consists of approximately 95 percent fines that can be rolled to a 1/32 inch thread. The blow/ft (N) is 10.

   Classification: Stiff, olive-gray Silty CLAY of high plasticity.

3. A soil matrix consists of 60 percent SAND sizes of which < 10 percent are medium or coarse sizes and 40 percent fines that cannot be rolled to a 1/4-inch thread. The blows/ft (N) is 12.

   Classification: Medium dense, gray, fine SAND and SILT.

## ORGANIC SOILS

Organic soils in New England generally fall into two categories; PEATS or ORGANIC SILTS. They can be identified using the following table which includes typical characteristics of each.

| NAME | CHARACTERISTICS |
|---|---|
| Fibrous PEAT | Light weight (typical total unit weight approx. 64 pounds per cubic foot (pcf)), spongy mostly visible organic matter, water squeezes readily from sample. Typically near top of deposit. |
| Fine Grained PEAT | Light weight (typical total unit weight approx. 70-80 pcf), spongy, little visible organic matter, water squeezes readily from sample. Typically below fibrous PEAT. |
| Organic SILT | Typically gray to dark gray, often has strong $H_2S$ odor.<br>Typically contains shells or shell fragments. Light weight (typical total unit weight approx. 90-95 pcf). Usually found near coastal regions. May contain wide range of sand fractions |

Copyright© 2010 GZA GeoEnvironmental, Inc.

Examples:

1. A sample is dark brown to black in color, is very moist and spongy with much organic fibers, roots, and other vegetation present. The blows/ft (N) are 2.

   Classification: Very soft to soft, dark brown to black fibrous PEAT.

2. A sample from downtown Boston is dark gray in color, has a strong $H_2S$ odor, contains about 15 percent fine sand sizes, shells and shell fragments are noted. The blows/ft (N) is 4.

   Classification: Soft to medium, dark gray Organic SILT, little fine Sand, trace shells/ shell fragments.

## RECORDS AND DOCUMENTATION

Refer to the documentation requirements in the SAP.

## SPECIAL NOTES

None.

## APPLICABLE STANDARDS AND REFERENCES

Foundation Engineering, Peck, Hanson, Thornburn (Chapt. 5).

NAVFAC DM-7.1 May 1982.

m:\files\nhdes master qapp - june 2009\appendix d - sops\sop d-4 burmister clasification system.doc

Copyright© 2010 GZA GeoEnvironmental, Inc.

*SOP L-6:*

# GUIDE FOR DESCRIPTION OF SOILS

# A GUIDE FOR DESCRIPTION OF SOILS

## PURPOSE

This standard operating procedure (SOP) is designed to be used by GZA personnel in the field at the Troy Mills Landfill Superfund Site in Troy, New Hampshire. It aids the individual in describing soil samples from test borings and test pits and is based mainly on visual classification. More accurate and detailed descriptions can be obtained later by laboratory testing, if required.

There are numerous classification systems currently in use, some of which are variations of the major and most accepted systems. For our purpose, the Burmister Soil Classification System will be used with occasional use of the Unified Soil Classification System when required by the client. Refer to the Burmister Soil Classification System SOP in the SAP.

Note: Field staff needs to check with the principal-in-charge (PIC) and/or the project manager (PM) before conducting field work to confirm the actual field procedure to be followed and to discuss and document any deviations to GZA's SOP.

## EQUIPMENT AND MATERIALS

- Personal protective clothing and gear (e.g., gloves, safety glasses);
- Field book; and
- Boring log / well construction details, including drilling method.

## PROCEDURES

Samples should be described using the following format and order:

1. Density or Consistency
2. Color
3. Grain Size
4. Major Soil Type
5. Minor Constituents
6. Special Components

### Density or Consistency

Density descriptions are reserved for granular soils which include non-plastic silt through gravel. The table below is based on blow counts obtained from the Standard

Copyright © 2010 GZA GeoEnvironmental, Inc.

Penetration Test.

**Soil Type**

Soil type is the major constituent as described in the Burmister Soil Classification System. The entire word should be capitalized (SAND, CLAY).

**Minor Constituents**

Minor constituents follow the major soil type in order of decreasing percentages. These are described in the Burmister Soil Classification System using the following percentages:

| | |
|---|---|
| 0 to 10 percent | Trace |
| 10 to 20 percent | Little |
| 20 to 35 percent | Some |
| 35 to 50 percent | And |

Each minor constituent has the first letter capitalized, (trace of Gravel).

**Special Components**

Special components include cobbles which will include sizes from 3 inches to 6 inches and boulders which are 8 inches plus. In estimating the percent of cobbles and boulders, it is best to use the number rather than the adverb. This will avoid confusion where one is describing, or example, a test pit containing 20 percent boulders up to 5 feet in diameter. It is better to say, "boulder content about 20 percent" instead of "little boulders" or "little little boulders" in the case of small boulders. The question arises, what is "little"? Other special components might include description of fill materials, e.g., trace of glass, oily odor, etc. If observing test pits in rubble fill, use special log addendum form which provides convenient means to log unusual constituents (refrigerators, cars, etc.).

Examples:

<u>Granular Soils</u>

- Dense, brown, fine to coarse SAND, some Gravel, little Silt.
- Medium dense, gray-brown SILT, lenses of fine SAND 1/4 inch thick.
- Loose, rust-brown, fine to coarse GRAVEL and fine to medium SAND, little Clayey Silt.
- Very dense, black CINDERS, some Ash, trace fine to coarse Sand, Brick, Glass.

Copyright © 2010 GZA GeoEnvironmental, Inc.

Cohesive Soils

- Soft, gray-black, Clayey Organic SILT, trace Shells, Peat Fibers, strong Organic Odor.
- Medium, mottled yellow, Silty CLAY, trace of fine Gravel.
- Very soft, gray CLAY Silt.

**RECORDS AND DOCUMENTATION**

Refer to the documentation requirements in the SAP.

**SPECIAL NOTES**

None.

**APPLICABLE STANDARDS AND REFERENCES**

Burmister Soil Classification System, GZA Technical Procedures No. 1.21.

Foundation Engineering, Peck, Hanson, Thornburn (Chapt. 5).

NAVFAC DM-7.1 May 1982.

m:\files\nhdes master qapp - june 2009\appendix d - sops\sop d-5 soil description.doc

Copyright © 2010 GZA GeoEnvironmental, Inc.

*SOP L-7:*

COLUMBIA TECHNOLOGIES MIP SOP

# STANDARD OPERATING PROCEDURES (SOP)
# for
# MEMBRANE INTERFACE PROBE SYSTEM

**Prepared by:**

**COLUMBIA Technologies, LLC**
1448 S. Rolling Rd, Baltimore, MD 21227, 410-536-9911 Fax: 410-536-0222

Data contained herein is proprietary to COLUMBIA Technologies, LLC (COLUMBIA), and may not be used, disclosed, reproduced, recorded, modified, performed, or displayed, in whole or in part, without the prior written approval of COLUMBIA. This data is provided for review purposes only, with no transfer of License Rights. This data represents Trade Secrets and is non-releasable under the Freedom of Information Act.
© 2000-2011 COLUMBIA Technologies, LLC All Rights Reserved.

**STANDARD OPERATING PROCEDURES (SOP)**
**for**
**MEMBRANE INTERFACE PROBE SYSTEM**

| Reviewed By: | Title | Signature | Date |
|---|---|---|---|
| John H. Sohl, III | CEO | | 06/01/2011 |

## 1.0 BACKGROUND

The Membrane Interface Probe (MIP) system is a multipurpose tool for mapping soil and groundwater contamination, specifically volatile organic compounds (VOCs) such as halogenated solvents and petroleum compounds. MIP used for the detection and measurement of VOCs vertically through the subsurface. As a continuous VOC sampling system which heats the soil, water, and vapor matrix is driven into the subsurface, the MIP maps contaminants within the groundwater and the surrounding soil. The VOC mass which is extracted across a semi-permeable membrane is carried to the surface by an inert purge gas via small diameter inert tubing. Once the compounds reach the surface they are analyzed by a suite of laboratory grade detectors. The sensor detection system includes:

- Photo Ionization Detector (PID),
- Flame Ionization Detector (FID) , and a
- Halogentated Compound Detector (either an ECD [Electron Capture Detector], XSD™ [Halogen Specific Detector], or a DELCD [Dry Electrolytic Conductivity Detector])

Together, these three detectors offer a range of sensitivities and a means of discriminating different classes of compounds – from chlorinated solvents to gasoline hydrocarbons to methane soil gas. The use of multiple detectors is important for separating different types of contamination such as petroleum (retail gasoline station) from chlorinated solvents (dry cleaners). The complementary range of performance of the different detectors enables the system to function from low contaminant levels to near NAPL levels.

## 1.1 APPLICATIONS IN A RANGE OF IN-SITU CONTAMINANT CONCENTRATIONS

The standard flow rate for the nitrogen within the transfer line is 40 mL/min. This can vary depending on the ambient air temperatures and the approximate concentrations

Data contained herein is proprietary to COLUMBIA Technologies, LLC (COLUMBIA), and may not be used, disclosed, reproduced, recorded, modified, performed, or displayed, in whole or in part, without the prior written approval of COLUMBIA. This data is provided for review purposes only, with no transfer of License Rights. This data represents Trade Secrets and is non-releasable under the Freedom of Information Act.
© 2000-2011 COLUMBIA Technologies, LLC All Rights Reserved.

of the contamination. If the ambient air is 40 degrees or lower, the flow should be increased to 50 mL/min. If the site investigation is focused on locating lower concentrations such as defining the outer edge of a plume, or the contaminant of concern is a known "low responder", the flows can be adjusted to be within 20-30 mL/min as deemed appropriate by the operator. When looking for high levels of contamination in source areas or NAPLs, the flow may be increased to be within 50-60 mL/min.

## 2.0 SETUP

When looking at the back of the controller box, on the right hand side, there is a port labeled Nitrogen Source. This is where the nitrogen supply enters the system. To the left of the nitrogen source is the input for detector 1 and detector 2. The green connector, which is the detector electrometers, is inserted here.

A trunk line connects the MIP probe to a controller box and the GC; the following assumes that a trunk line is already connected to the probe. The trunk line consists of 5 wires, 1/16" down line Teflon tubing, and 1/16" return PEEK tubing. The brown wire is the thermocouple wire and is made up of 2 individual wires, red and yellow. These two wires are connected to the male thermocouple connector (yellow). The red wire goes to the negative pole, and yellow to the positive: the +/- is clearly marked on the connector itself. The male thermocouple connector then gets inserted into the female connector labeled *Thermocouple* at the back of the controller box. The remaining 4 wires are associated with the *Heater and Conductivity* connector. The probe heater wires (both yellow) are connected to the top 2 lugs of this connector. The Dipole soil conductivity wires (red/white) are connected to the bottom 2 lugs of the connector. The 2 lengths of tubing should always be joined by a female-to-female adaptor when not attached to the controller box and GC. This is to prevent any particulate matter from getting inside the tubing and potentially causing a clog. The first length of tubing is always connected to the port labeled *Regulated Out* at the back of the controller box first. This is so that any particulate matter that may have entered into the tubing is expelled, be sure that nitrogen is flowing through the controller box. The second length of tubing is then connected to the inlet of the dryer tube. When attaching gas lines they are to be hand tight and then a ¼ turn with a wrench.

## 3.0 START UP

- Check to ensure that nitrogen has greater than 400 psi, replace tank if lower
- Turn on nitrogen source, and check that regulator reads 60 psi out
- Confirm ~20psi on Prime Regulator gauge and record in log
- Power on GC, confirm proper detector temperatures
- Power on MIP controller box

Data contained herein is proprietary to COLUMBIA Technologies, LLC (COLUMBIA), and may not be used, disclosed, reproduced, recorded, modified, performed, or displayed, in whole or in part, without the prior written approval of COLUMBIA. This data is provided for review purposes only, with no transfer of License Rights. This data represents Trade Secrets and is non-releasable under the Freedom of Information Act.
© 2000-2011 COLUMBIA Technologies, LLC All Rights Reserved.

- Power on PID lamp and PID heater
- Power on air compressor and turn on hydrogen (60 psi)
- Light FID
- Check flows and membrane…section 5.1
- Turn controller box probe heater switch to on
- Power on laptop or field computer
- Open MIP software.
- Response check…section 5.2

## 3.0 LOGGING PROCEDURES

- Use a rotary drill steel, or pre-probe punch to create a pilot hole if going through asphalt or concrete.
- Place the rod wiper under the foot of the probe, and line it up with the pilot hole.
- Put the slotted drive cap on the probe drive head, and insert the probe into the hole in the rod wiper, so that the tip of the probe is even with the ground.
- Connect the umbilical and string-pot…section 5.4
- Check the pressure readings, temperature and detector baselines.
- Press the trigger to on position and commence probing.
- Advance the probe 1-foot at a hammer rate determined by **COLUMBIA**'s analyst, wait 30 seconds, repeat to refusal.
- If necessary change the attenuation of the GC and the MIP if the response begins to approach the end of the current range. (see section 5.2)
- If the contaminant is known to exist at or below a certain depth, it is acceptable to push straight to that depth without stopping. The log will still provide accurate depth and conductivity data.
- When looking for NAPL, it may be useful to push through different intervals rather than "stop and hold" as deemed necessary.
- Once the target depth or equipment refusal has been reached, wait 15 seconds longer than the determined trip time and turn the trigger "off".
- Release the string-pot string from the counter weight, and disconnect the umbilical, insert cotter pin in counter weight whenever rig is in motion.
- Using DI Viewer, recall the appropriate file, adjust the scaling to the predetermined uniform scale, check for anomalies and edit appropriately
- Print out MIP log if client requests.
- Upload the MIP log data files and performance test files per SmartData Solutions® SOP

## 4.0 RETRIEVAL AND INSPECTION

Data contained herein is proprietary to COLUMBIA Technologies, LLC (COLUMBIA), and may not be used, disclosed, reproduced, recorded, modified, performed, or displayed, in whole or in part, without the prior written approval of COLUMBIA. This data is provided for review purposes only, with no transfer of License Rights. This data represents Trade Secrets and is non-releasable under the Freedom of Information Act.
© 2000-2011 COLUMBIA Technologies, LLC All Rights Reserved.

- Start pulling rods out of the ground, and replace on rod rack.
- Rod wiper will normally suffice for decon unless otherwise specified by client.
- If high levels were encountered, it may be useful to clean the membrane with methanol.
- Prior to the next location, visually inspect the probe and tighten if necessary, check for changes in back flow pressures and temperatures.
- If moving system to perform another log, prepare equipment for travel and repeat the above procedures. If there are no more logs to perform shutdown the system…section 5.5

## 5.1 FLOW TESTS

There are several critical flows that need to be monitored, and possibly adjusted to maximize the efficiency of the MIP system. These include the pressure from the supply tank to the prime regulator, the flow rate throughout the transfer line, the mass flow, and the flow rate inside the dryer tube. This is done at the beginning of everyday, and again if deemed necessary by **COLUMBIA**'s analyst due to changing field conditions.

- The prime regulator on the front of the MIP controller box should be set to ~20 psi using a small flathead screwdriver.
- Disconnect the nitrogen line at the trunkline exit and attach a 1/16" female-to-female adaptor.
- Insert adaptor into the flow meter line.
- Adjust the mass flow dial with small adjustments until the meter reads ~40 mL/min or alternate predetermined rate.
- Reconnect and check flow coming out of the controller box. The difference should be less than 5mL/min.
- Lock the mass flow dial in place, and record both mass flow and dial setting.
- Disconnect the nitrogen line, and attach the meter to the outlet of the dryer tube.
- The measured flow out of the Dryer tube should be ~80 mL/min.
- Adjust the flow accordingly using the control valve on the opposite end of the dryer tube.
- Disconnect the meter and reconnect gas lines.
- Check membrane for excessive leaks with Snoop or similar leak detector.
- If bubbles appear around the perimeter of the membrane, use membrane wrench to tighten, and check again.
- If excessive leak at center of membrane, replace membrane…(refer to section 5.4)

## 5.2 QUALITY ASSURANCE RESPONSE CHECK and TRIP TIME

Data contained herein is proprietary to COLUMBIA Technologies, LLC (COLUMBIA), and may not be used, disclosed, reproduced, recorded, modified, performed, or displayed, in whole or in part, without the prior written approval of COLUMBIA. This data is provided for review purposes only, with no transfer of License Rights. This data represents Trade Secrets and is non-releasable under the Freedom of Information Act.
© 2000-2011 COLUMBIA Technologies, LLC All Rights Reserved.

Although the MIP system cannot be calibrated, the system can be monitored for reproducibility and proper performance. Using detector specific compounds, a response check is performed before every MIP log. This procedure can performed using solvent vapors (a "Response Test"), or using aqueous solutions of known compounds (a "Performance Test").

### 5.2.1 RESPONSE TEST

This is done by introducing the headspace of a neat organic compound to the membrane, and then measuring the response against pre-set acceptable limits. The "trip time", or the time it takes for a mass to move across the membrane and cause a detector response, needs to be measured at the time of a response check.

- Scroll the MIP software up to view the response vs. time screen
- To determine the trip time, introduce Butane from a lighter into the membrane for 5 seconds while simultaneously starting a stopwatch.
- Record the time it takes for butane to get from the membrane to when you first see a response on the screen.
- This value is entered into the MIP software on the main screen when starting a new log, and recorded in the field log.
- Continue with the response checks by choosing the appropriate compound. For the PID use neat benzene, the ECD use neat trichloroethylene and for the FID use the butane from a lighter.
- Introduce the vapor for 5 seconds.
- Record the response that appears on the screen.
- The response should be greater than 1E+6 mV.

### 5.2.2 PERFORMANCE TEST

A performance test is used to evaluate detector response from target compounds in aqueous solution. Standard compounds such as Benzene and TCE are also commonly used for performance tests, but specific target compounds for a site may be used as well. The "trip time", or the time it takes for a mass to move across the membrane and cause a detector response, needs to be measured at the time of a performance check.

- Scroll the MIP software up to view the response vs. time screen
- To determine the trip time, introduce Butane from a lighter into the membrane for 5 seconds while simultaneously starting a stopwatch.
- Record the time it takes for butane to get from the membrane to when you first see a response on the screen.
- This value is entered into the MIP software on the main screen when starting a new log, and recorded in the field log.

Data contained herein is proprietary to COLUMBIA Technologies, LLC (COLUMBIA), and may not be used, disclosed, reproduced, recorded, modified, performed, or displayed, in whole or in part, without the prior written approval of COLUMBIA. This data is provided for review purposes only, with no transfer of License Rights. This data represents Trade Secrets and is non-releasable under the Freedom of Information Act.
© 2000-2011 COLUMBIA Technologies, LLC All Rights Reserved.

- Continue with the performance checks by choosing the appropriate compound. For the PID use a benzene solution (or other site-specific target compound), the halogen detector use a trichloroethylene solution (or other site-specific compounds). The FID response is still evaluated using butane from a lighter unless some site-specific compound is chosen for testing.
- Prepare Stock Standard of compound(s) of interest (see MIPS Performance Test Solution Prep spreadsheet)
- Immerse the probe in a container of clean water (commonly a 2" PVC tube) to stabilize the baseline.
- Check the stability of the detector vs time data on the MIP software
- Prepare 500 ml Testing standard from Stock Standards, place in 2" PVC Tube.
- Insert the probe into the test solution of known concentration for 45 seconds
- Return the probe to the tube containing clean water if using.
- Record trip time and response for each detector in field notes
- Compare results to previous measurements
- If the result varies more than 50% for any detector, begin trouble-shooting evaluation. Note any corrective actions performed in field notes

## 5.3 DEPTH MEASURING STRING-POT

Attach the string-pot to the string-pot bracket, and then to the main anchoring bolt of the probe hammer. The string-pot bottom clamp must then be bolted to the foot of the hammer. Prior to operation, the cotter pin is to be removed from the foot bracket so that the counter weight is free to move, and then inserted into the eyebolt on top of the counter weight. When the string or cable connects these two devices, the cable should be parallel to the probe and perpendicular to the ground. It is essential that the string-pot cable be connected to the counter weight prior to the activation of the trigger, or the depth measurements will not be accurate. The umbilical should be attached to the string-pot before the activation of the trigger as well.

## 5.4 MEMBRANE REPLACEMENT

It is important to note that while completing the following procedure to use great care when screwing in the new membrane. Be sure that the threads do not become cross-threaded. This would make a complete seal impossible, which will then greatly hinder the performance of the MIP system.

- Secure the probe.
- Clean the membrane and surrounding area thoroughly.
- Clean out the 4 holes in the membrane with a dental pick or small flathead screwdriver

Data contained herein is proprietary to COLUMBIA Technologies, LLC (COLUMBIA), and may not be used, disclosed, reproduced, recorded, modified, performed, or displayed, in whole or in part, without the prior written approval of COLUMBIA. This data is provided for review purposes only, with no transfer of License Rights. This data represents Trade Secrets and is non-releasable under the Freedom of Information Act.
© 2000-2011 COLUMBIA Technologies, LLC All Rights Reserved.

- Using the membrane wrench, carefully unscrew the membrane while applying equal pressure to the top of the membrane.
- Remove the membrane, and use the pick to clean up the interior threads of the probe, while blowing out the freed dirt.
- Remove the washer carefully so to not allow any dirt to fall into the chamber.
- Insert a new washer
- Thread the new membrane into position, and tighten with the membrane wrench.
- Using Snoop, check for leaks around the perimeter of the membrane.
- If bubbles appear around the edge, use the wrench to tighten more.
- Continue to tighten, until there is a complete seal.
- There should be a certain amount of gas escaping through the center of the membrane as a foam; this is acceptable.

## 5.5 SHUTDOWN PROCEDURES

- Turn off the power supply to the heater.
- Turn off the PID lamp and heater.
- Turn off GC.
- If using FID, close the valve to the tank of hydrogen.
- When the probe temperature has returned to ambient, turn off power to MIP controller box.
- Close the valve to the tank of nitrogen.
- Shutdown the computer.
- Shutdown the generator.

## 6.0 REFERENCES

- Geoprobe® Membrane Interface Probe SOP, Revision June, 2009
- ASTM D7352-07

Data contained herein is proprietary to COLUMBIA Technologies, LLC (COLUMBIA), and may not be used, disclosed, reproduced, recorded, modified, performed, or displayed, in whole or in part, without the prior written approval of COLUMBIA. This data is provided for review purposes only, with no transfer of License Rights. This data represents Trade Secrets and is non-releasable under the Freedom of Information Act.
© 2000-2011 COLUMBIA Technologies, LLC All Rights Reserved.

# MIP PERFORMANCE TEST SOLUTION PREP

50 MG/ML STOCK -- 100, 10, AND 1 MG/L (PPM) SOLUTIONS IN 500 ML DI

| Compound Name | Density (g/L) | 25 ml of 50 mg/mL Stock from neat in 25 ml MEOH (uL) | 10 ml of 50 mg/mL Stock from neat in 10 ml MEOH (uL) | Volume 0f 50 mg/L Stock for 100 mg/L in 500 ml DI (uL) | Volume 0f 50 mg/L Stock for 10 mg/L in 500 ml DI (uL) | Volume 0f 50 mg/L Stock for 1 mg/L in 500 ml DI (uL) |
|---|---|---|---|---|---|---|
| Trichloroethylene | 1.4642 | 854 | 341 | 1000 | 100 | 10 |
| Methylene Chloride | 1.33 | 940 | 376 | 1000 | 100 | 10 |
| 1,2 Dichloroethylene | 1.27 | 984 | 394 | 1000 | 100 | 10 |
| 1,1-Dichloroethylene | 1.213 | 1031 | 412 | 1000 | 100 | 10 |
| 1,1,2,2-Tetrachloroethane | 1.586 | 788 | 315 | 1000 | 100 | 10 |
| Benzene | 0.8765 | 1426 | 570 | 1000 | 100 | 10 |
| Toluene | 0.87 | 1437 | 575 | 1000 | 100 | 10 |
| Tetrachloroethylene | 1.6227 | 770 | 308 | 1000 | 100 | 10 |
| Carbon Tetrachloride | 1.594 | 784 | 314 | 1000 | 100 | 10 |
| Chlorobenzene | 1.106 | 1130 | 452 | 1000 | 100 | 10 |
| 1,1,1-Trichloroethane | 1.3376 | 935 | 374 | 1000 | 100 | 10 |
| 1,1,2-Trichloroethane | 1.442 | 867 | 347 | 1000 | 100 | 10 |
| 1,1-Dichloroethene | 1.2129 | 1031 | 412 | 1000 | 100 | 10 |
| 1,4-Dichlorobenzene | 1.241 | 1007 | 403 | 1000 | 100 | 10 |
| MTBE | 0.7404 | 1688 | 675 | 1000 | 100 | 10 |
| Hexanes | 0.6603 | 1893 | 757 | 1000 | 100 | 10 |
| MEK (2-butanone) | 0.81 | 1543 | 617 | 1000 | 100 | 10 |
| Ethylbenzene | 0.87 | 1437 | 575 | 1000 | 100 | 10 |
| m-Xylene | 0.86 | 1453 | 581 | 1000 | 100 | 10 |
| o-Xylene | 0.88 | 1420 | 568 | 1000 | 100 | 10 |
| p-Xylene | 0.86 | 1453 | 581 | 1000 | 100 | 10 |
| Methylene Chloride | 1.33 | 940 | 376 | 1000 | 100 | 10 |
| Diesel | 0.81 | 1543 | 617 | 1000 | 100 | 10 |
| Naphthalene | 1.15 | 1087 | 435 | 1000 | 100 | 10 |
| Acetone | 0.79 | 1582 | 633 | 1000 | 100 | 10 |
| 1,2-Dichloroethane | 1.24 | 1008 | 403 | 1000 | 100 | 10 |
| Trichlorfluoromethane | 1.374 | 910 | 364 | 1000 | 100 | 10 |
| 1,1-Dichloroethane | 1.18 | 1059 | 424 | 1000 | 100 | 10 |
| 1,2-Dibromoethane | 2.1 | 595 | 238 | 1000 | 100 | 10 |
| tert_Butyl Alcohol (TBA) | 0.79 | 1582 | 633 | 1000 | 100 | 10 |

Data contained herein is proprietary to COLUMBIA Technologies, LLC (COLUMBIA), and may not be used, disclosed, reproduced, recorded, modified, performed, or displayed, in whole or in part, without the prior written approval of COLUMBIA. This data is provided for review purposes only, with no transfer of License Rights. This data represents Trade Secrets and is non-releasable under the Freedom of Information Act.
© 2000-2011 COLUMBIA Technologies, LLC All Rights Reserved.

*SOP L-8:*

COLUMBIA TECHNOLOGIES HPT SOP

# STANDARD OPERATING PROCEDURES (SOP)
# for
# HYDRAULIC PROFILING TOOL SYSTEM

**Prepared by:**

**COLUMBIA Technologies, LLC**
1448 S. Rolling Rd, Baltimore, MD 21227, 410-536-9911 Fax: 410-536-0222

Data contained herein is proprietary to COLUMBIA Technologies, LLC (COLUMBIA), and may not be used, disclosed, reproduced, recorded, modified, performed, or displayed, in whole or in part, without the prior written approval of COLUMBIA. This data is provided for review purposes only, with no transfer of License Rights. This data represents Trade Secrets and is non-releasable under the Freedom of Information Act.
© 2000-2011 COLUMBIA Technologies, LLC All Rights Reserved.

**STANDARD OPERATING PROCEDURES (SOP)**
**for**
**HYDRAULIC PROFILING TOOL SYSTEM**

| Reviewed By: | Title | Signature | Date |
|---|---|---|---|
| John H. Sohl, III | CEO | | 06/01/2011 |

## 1.0 BACKGROUND

The Hydraulic Profiling Tool (HPT) uses direct pressure response measurements of hydraulic permeability to determine migration pathways, remediation injection regions, and placements for monitoring wells.

The pressure response of the soil to injection of water is measured to indicate the soil grain size. Real-time continuous data can be produced in both fine and coarse grained material with saturated or unsaturated conditions.

The system consists of two sensors:

- A sensitive downhole transducer to record dynamic pore pressure
- An electrical conductivity sensor providing information on lithology

While most soil profiling methods *infer* permeability from parameters like grain size or geotechnical properties, the HPT system can measure continuous data on hydraulic permeability directly by injecting water into the formation. Additionally, the Hydraulic Profiling Tool can conduct static dissipation tests at individual depths. This data is used to determine static water level (or head pressure in confined aquifers) and hydraulic conductivity.

## 1.1 APPLICATIONS

The Hydraulic Profiling Tool (HPT) allows the user to create fast, continuous, real-time profiles of soil hydraulic properties in both fine-and coarse-grained material. The HPT uses a sensitive, downhole transducer to measure the pressure response of the soil to injection of water. The higher the pressure response on the data logs, the lower the zone of permeability, and inversely, the lower the pressure response on the data logs, the higher the zone of permeability. For purposes of locating and defining preferential migration pathways for contaminants in the subsurface, targeting zones for injection of remediation material, and selecting screen well intervals, evaluating locations to detect slug tests, and measuring static water conditions across a site, it is preferred to conduct these in higher zones of permeability, so therefore the pressure response on the data logs

Data contained herein is proprietary to COLUMBIA Technologies, LLC (COLUMBIA), and may not be used, disclosed, reproduced, recorded, modified, performed, or displayed, in whole or in part, without the prior written approval of COLUMBIA. This data is provided for review purposes only, with no transfer of License Rights. This data represents Trade Secrets and is non-releasable under the Freedom of Information Act.
© 2000-2011 COLUMBIA Technologies, LLC All Rights Reserved.

would correlate with a lower reading.

## 2.0 SETUP

Complete Load List and assemble parts for HPT probe assembly, refer to the Geoprobe HPT SOP for parts identification and illustrations. Place o-ring on the MIP-LB Connection Tube (Wiring Cavity). Tape loose ends on the truck end of the Trunkline for stringing and then string trunkline through the MIP-LB tube, and MIP Drive Head. Do NOT string the strain-relief fitting and parts mentioned in the full SOP, those parts will be replaced by the water seal and spacer. String the trunkline through the rods to be used, add an extra 10% past the depth stated in the SmartScreen summary. Leave 15 to 20 feet of slack at the probe end of the Trunkline. Install an HPT screen and copper seal if not already present on the probe. Place an o-ring at the bottom of the HPT probe threads if not already present and then pull the inner tubing out of the yellow tubing about 3/8 inch. Cut the yellow tubing so that it extends about 2.5 inches from the top of the HPT probe threads. Insert the pointed end of the brass barbed quick connect fitting into the yellow tubing. This will push the inner tubing back into place inside of the HPT probe. Attach the single end of the Y fitting to the blunt end of the brass barbed quick connect fitting. Insert the blunt end of the second brass barbed quick connect fitting into one of the two holes on the other end of the Y fitting. Pack dielectric grease into both ends of the chrome connectors on the trunkline, also pack the ends of the connectors on the chrome fittings on the probe and HPT sensor.

Using the wiring cavity as a guide for length, cut a section of yellow tubing (from the service kit) to connect the HPT sensor to the Y connector. Attach the yellow tubing to the pointed end of the brass barbed quick connect fitting already placed in the Y connector. Attach the HPT sensor to the other end of this tubing, being careful not to break the barb on the HPT sensor. Connect the chrome connectors (packed with dielectric grease). Trim the nylon tubing in the trunkline to fit into the last opening of the Y connector. Wrap the EC wires around the other connections to reduce its length and tape into place and then hold the connections in place using several bands of tape rather than completely taping the connections to avoid moisture buildup trapped by the tape. Coat the threads of the HPT probe with Teflon pipe dope. Thread the MIP-LB tube into place. Be sure not to twist the internal connections. Use pipe wrenches to close the joint firmly. Do NOT

Data contained herein is proprietary to COLUMBIA Technologies, LLC (COLUMBIA), and may not be used, disclosed, reproduced, recorded, modified, performed, or displayed, in whole or in part, without the prior written approval of COLUMBIA. This data is provided for review purposes only, with no transfer of License Rights. This data represents Trade Secrets and is non-releasable under the Freedom of Information Act.
© 2000-2011 COLUMBIA Technologies, LLC All Rights Reserved.

follow the SOP directions for installing the strain relief fittings. Place the ORANGE water seal in place over the trunkline. Place the two half spacers into the drive head, curved sides away from the water seal. Then, coat the threads of the MIP-LB tube with Teflon pipe dope. Thread the drive head onto the MIP-LB tube, use pipe wrenches to close the joint firmly. The HPT probe is now ready to be connected to the HPT controller.

## 3.0 START UP

- Run HPT trunkline (after stringing through the rods to be used) to the back of the location where the HPT controller is to be installed.
- Remove electrical tape from the loose wire ends, and attach the wires to the green electrical connectors as follows:
    - Transducer wires – attached to the port closest to the serial data port (DB-9 port going to the field computer) connection. Check the orientation of the green plug in the socket before beginning, because it is upside down as compared to all other uses of this connector for doing MIP. Once you have the orientation correct the wires are attached in the following order, top to bottom of the plug – Brown, Orange, Red. The bottom connection is not used.
    - Conductivity wires – attached to the port closest to the Field Instrument Interface (round plug going to the field computer) connection. This green plug is in the standard orientation as used for MIP. The wires are attached in the following order, top to bottom of the plug – White, Black, Yellow, Blue.
    - There are several other wires (grey, violet, green) which are not used. These wires can be taped to the trunkline to keep them out of the way.
- Attach the connections to the field computer mentioned above (DB-9 and round plugs). This is the same cable used to connect the Field Computer to the MIP controller.
- If not already attached, connect the other ends of this cable to the Field Computer in the usual locations.
- If not already attached, connect the stringpot cable to the Field Computer
- If not already attached, connect the power lead to the Field Computer
- Connect the plug from the SC Probe Test Jig to the Test Input socket on the Field Computer
- Attach the nylon tubing in the trunkline to the Injection Line socket on the back of

Data contained herein is proprietary to COLUMBIA Technologies, LLC (COLUMBIA), and may not be used, disclosed, reproduced, recorded, modified, performed, or displayed, in whole or in part, without the prior written approval of COLUMBIA. This data is provided for review purposes only, with no transfer of License Rights. This data represents Trade Secrets and is non-releasable under the Freedom of Information Act.
© 2000-2011 COLUMBIA Technologies, LLC All Rights Reserved.

the HPT controller. To do so, trim the end of the tubing off square, and press the tubing into the socket firmly. Do not crush the tubing in the process by pushing too hard.

- Run the Water Supply Line (black plastic tubing with Brass quick-connect fittings on both ends) to the back of the HPT controller and attach it to the Water Supply Line quick connect fitting. This line has a male fitting on the end that goes to the pump, and a female fitting on the end that goes to the HPT controller.
- Run the other end of the Water Supply Line to the HPT pump quick connect fitting.
- Attach a standard garden hose to a water supply tank from which clean water will be gravity-fed to the HPT pump. Try to avoid water sources with particles in them, such as alge or sediment.
- Attach the male end of the garden hose to the HPT pump. A cut-off valve at that connection works well to prevent air from getting back into the line when the system is disconnected between locations. If a cut-off valve is in place, open it.
- Attach a power lead to the HPT controller
- Attach a power lead to the HPT pump. Use the GFI device and extension cord for this connection.
- The HPT system is now ready to be tested prior to use.

## 3.0 EC SYSTEM TESTING PROCEDURES

- Turn on the Field Computer and HPT Controller. Start the HPT software on the Field Computer. Both the EC and HPT components must be tested before logging is started.
- Secure the Wenner Array Test Jig connector to the test input jack on the back of the Field Computer (if not already attached in step 7 of the HPT Controller setup.
- Clean and dry the Wenner array pins as well as several inches of the probe body above the pins.
- Strap the probe to the Wenner Array Test Jig using the Velcro straps provided in such a way that the 4 pins on the test jig touch the 4 Wenner array pins on the probe. The last pin on the Wenner Array Test Jig should be in contact with the body of the probe, on the trunkline side of the Wenner array. A good way to get the correct orientation is to be sure that the wire coming off of the Wenner Array Test Jig is going in the same direction as the trunkline on the HPT probe.
- Start the HPT software, and choose “Test Instrument”. The Field Computer will

Data contained herein is proprietary to COLUMBIA Technologies, LLC (COLUMBIA), and may not be used, disclosed, reproduced, recorded, modified, performed, or displayed, in whole or in part, without the prior written approval of COLUMBIA. This data is provided for review purposes only, with no transfer of License Rights. This data represents Trade Secrets and is non-releasable under the Freedom of Information Act.
© 2000-2011 COLUMBIA Technologies, LLC All Rights Reserved.

conduct a self-test and then check the EC probe for isolation and continuity. Once the tests are complete, a list of EC options are available. Select the appropriate EC array based on the probe test results. (Normally Wenner will be chosen. If one or more contacts have failed, top, middle , or bottom dipole choices can be made to continue logging without replacing the probe.)

Data contained herein is proprietary to COLUMBIA Technologies, LLC (COLUMBIA), and may not be used, disclosed, reproduced, recorded, modified, performed, or displayed, in whole or in part, without the prior written approval of COLUMBIA. This data is provided for review purposes only, with no transfer of License Rights. This data represents Trade Secrets and is non-releasable under the Freedom of Information Act.
© 2000-2011 COLUMBIA Technologies, LLC All Rights Reserved.

*SOP L-9:*

COLUMBIA TECHNOLOGIES LIF SOP

## Standard Parts

The following figure provides the standard parts for the UVOST. Prior to using the UVOST, these parts or satisfactory substitutions should be on hand or readily available when needed.

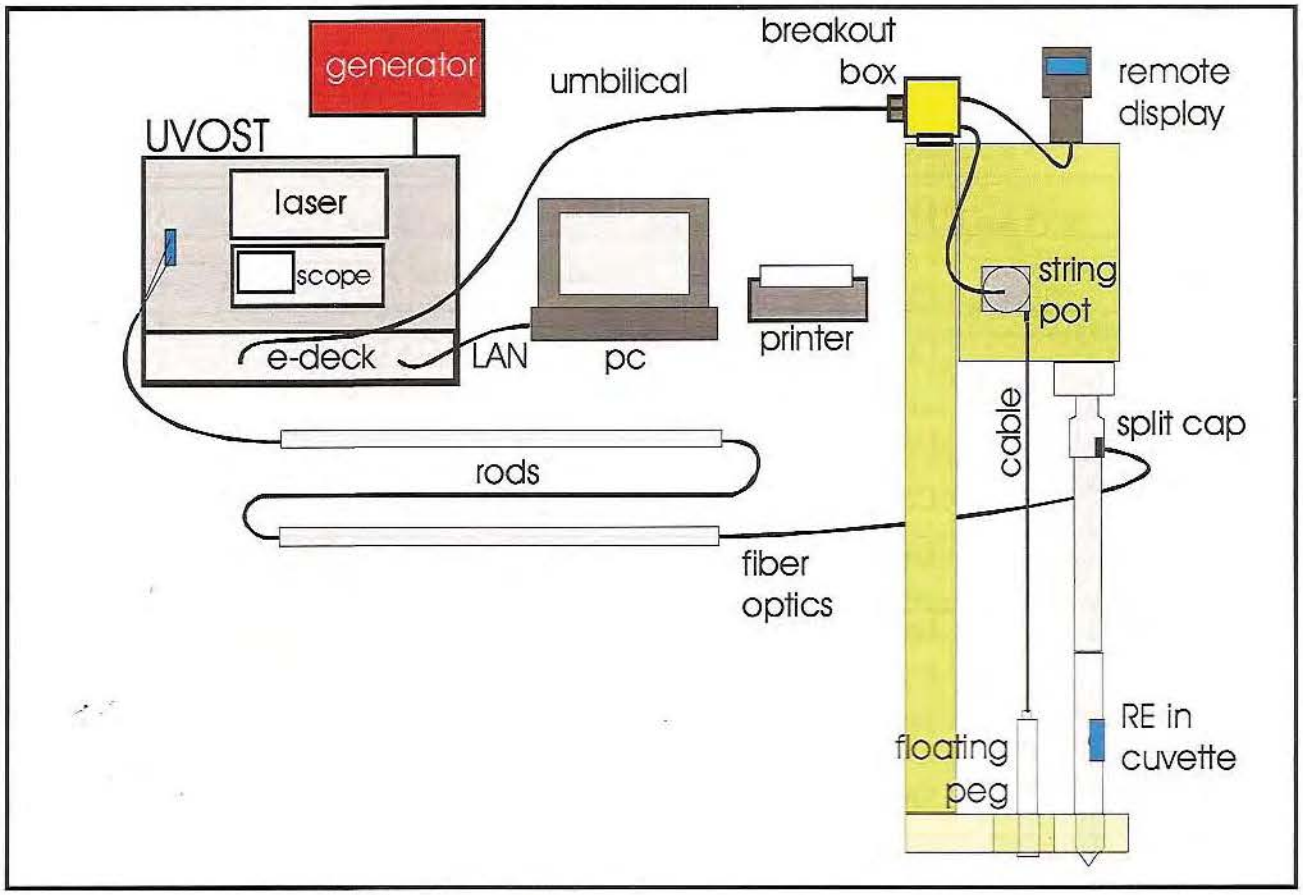


**Figure 1. Standard UVOST parts.**

# General Operating Procedures

## *Set Up*

Prior to operation, all the sub-systems require proper connections/cabling and power. Table 2 summarizes the proper connections/cabling.

**Table 2. Cabling/Connections**

| **Primary Connections**<br>[Connection labels in blue] | | |
|---|---|---|
| **Device 1** | **Device 2** | **Cable/Fiber** |
| Power/Generator | e-deck (front)<br>[PWR IN] | Standard Modular AC Line Plug |
| e-deck (front)<br>[NET] | Control PC | LAN (standard CAT 5) |
| e-deck (front)<br>[UMBILICAL] | Breakout Box<br>[no label] | Umbilical Cable (Amphenol to DB15) |
| e-deck (front)<br>[PWR OUT] | Control PC | 110V AC Line converter |
| Breakout Box<br>[DEPTH] | String Pot<br>[no label] | Depth Cable (DB9 to Amphenol) |
| Breakout Box<br>[DISLAY] | Remote Display<br>[no label] | Remote Display Cable (DB9 to DB9) |
| UVOST Fiber I/O<br>[LAUNCH FIBER] | SPOC | Fiber Optic Cable (2 SMA to Special Terminator) |
| UVOST Fiber I/O<br>[RETURN FIBER] | SPOC | Fiber Optic Cable (2 SMA to Special Terminator) |
| **Secondary Connections** | | |
| e-deck (front)<br>[GPS] | GPS NMEA Output | DB9 RS-232 (Serial – usually integral to GPS) |
| e-deck (front)<br>[AUX COM] | AD4 Quadrature | DB9 RS-232 (Serial) |
| e-deck (front)<br>[12V AUX] | Generic 12V Accessory | Power Plug 0.1" (Switchcraft 761K) |
| Breakout Box<br>[AUX] | NA (future use) | DB15 to (yet defined) |
| **Permanent Connections** | | |
| **Device 1** | **Device 2** | **Cable/Fiber** |
| UVOST Fiber I/O<br>(lower backside) | Detection Module<br>(FIBER RETURN) | Single Fiber Optic (SMA-SMA) |
| UVOST Fiber I/O<br>(upper backside) | Laser Launch Optics | Single Fiber Optic (High Power SMA-SMA)<br>(standard fiber can be used as backup) |
| Trigger Photodiode | Oscilloscope<br>[Ch1] | Coaxial Cable (SMA-BNC) |
| Emission Module<br>[SIGNAL OUT] | Oscilloscope<br>[Ch2] | Shielded Coax (PMT-BNC) |

| | | |
|---|---|---|
| Trigger Photodiode | XeCl Laser (vessel) | Single Fiber Optic (SMA-SMA) |
| UVOST e-deck (rear) [NET SCP] | Oscilloscope | LAN (CrossOver CAT 5) |
| UVOST e-deck (rear) [12V PMT] | Detection Module [12V IN PMT] | 12V supply (SMA-SMA) |
| AC Line (external) | NA | Standard Modular AC Line Plug |
| e-deck (rear left-most) [PWR OUT] | Vacuum Pump (switch at front of e-deck) | Standard Modular AC Line Plug |
| e-deck (rear) [PWR OUT] | XeCl Laser | Standard Modular AC Line Plug |
| e-deck (rear) [PWR OUT] | Oscilloscope | Standard Modular AC Line Plug |
| e-deck (rear) [Cond.] | Conductivity Module [Cond. Out] | 12V Signal Cable (?-?) |

## Power Up/Down

To power up the UVOST, simply switch the power on using the power switch on the front of UVOST's e-deck. All peripheral devices are powered through the cabling – minimizing tangles and trip hazards. The laser takes several minutes of warm-up and Wait LED will then light. Once warmed the user is notified by the Ready light. Push the On button to activate lasing. Lasing LED should light. There should be a small rectangular yellow glow on the yellow glass indicator at front of launch optics assembly. The oscilloscope should display Trig'd – if laser has sufficient output (not in need of recharge).

Set laser rep rate to between 63-65 Hz. If powering up from cold conditions (overnight, etc.), make sure you have laser running at least 10-15 minutes prior to attempting your first RE calibration. We recommend running heaters overnight if in sub-freezing conditions to minimize warm-up times in the morning. Extremely high or low temperatures negatively affect laser power. If used in extreme conditions one should attempt to house/store the UVOST system in a warmer/cooler environment to assure proper operation. There are no hard/fast rules for this – since case temperatures/heaters can assist but a lot depends on winds, ventilation, direct sun, etc.

To power down the UVOST, first Stop the laser pulsing, then switch off the power button.

## Boot PC and Check Software Function

Make sure all drivers are loaded and ready. Start the OST system software. Indicators in the software will assist in alerting you to problem connections and general status of the components (Hardware Tab). See software manual for specifics on OST software.

## Proper System Function

Once the software is started and functional you can proceed to check the depth encoding and associated peripheral functions. Actuating the probe (or hand advancing the string pot) should show Current Depth changing on the OST software (Depth tab). The Remote Display should be functional and show status. Activate Info tab and make sure your job information is updated for storage with each LIF log.

## SPOC Setup

A detailed discussion is available under SPOC Assembly heading. Carefully examine mirror and window for ANY trace grease, lint, and moisture. They must be very clean. Assure that all o-rings, seals, and adapters are in correct order – including Teflon tape, and associated hardware. With SPOC tip left off of SPOC, dry the air inside the SPOC, and quickly screw in window. You can check for moisture condensing inside window using an ice cube. If there is condensation you must dry the SPOC air better. Slightly tighten the mirror and fiber optic Swagelock seals (just snug). Adjust fiber terminator up/down to achieve proper distance from mirror to collimate the laser beam (use white paper – you may have to "up" energy for this).

Place RE in front of window and adjust laser energy (Fiber I/O block screw) to achieve approximately ¾ scale with oscilloscope's CH2 on 50 mV/div. Adjust the mirror (using window pick/hook) to image only the sapphire window – not epoxy or SPOC barrel (no clipping – full circle image on paper). This occurs approximately 1/3 of the way down from top of window.

Clean/polish window and then make sure that background does not exceed ~2.5mV peak signals. If background is high, carefully inspect for imaging of sides/epoxy or contamination (lint, cotton fibers, fuel, moisture, grease, etc.) An unacceptably high background can make interpretation extremely difficult.

Once you're certain the mirror/fiber/window system is achieving proper results you can tighten the Swagelocks securely. Use ONLY the supplied wrenches to hold the SPOC securely during tightening. This is most readily assured by laying SPOC down and only handling wrenches. Use the mirror pick/hook to hold the mirror firmly in place during tightening to prevent rotation. Make sure laser beam stays in centered in the window (side to side) and 1/3 down from the top (toward first rod).

With window/mirror/fiber terminator all secured, proceed with attaching drive tip, adapter, extension rod, and tighten extremely well with 2 pipe wrenches or pipe wrench and vice. Teflon tape helps reduce loosening from rattling/vibration.

## Background

Wipe window clean and acquire a Background (blank) waveform with the Acq BckG command. A perfect system would yield no waveform at all – only white noise. But there is always trace fluorescence from mirror/window, fiber-generated Raman, and contamination. Try to achieve <2mV peak signal in any one channel. You simply want it as small as you can get it. A severely jagged/noisy background indicates possible pickup of the large laser EMF (Electric and Magnetic Fields) into the trigger and signal coax cables. Loose grounds, connections, misrouting of cables, etc. can induce this. If the first channel (350 nm) is considerably large than the other three, there is a chance that you have excessive backscatter of laser light into the system (350nm filter is near laser wavelength) or the laser rejection filter (inside I/O block) may be damaged or malfunctioning. Channels 3 and 4 being high/narrow is a classic lint signature. A background waveform that looks like your current contaminant of interest suggests leakage and contamination of the internal SPOC mirror/window OR simply a dirty window. Clean with methanol or solvent if soap/water doesn't work.

## RE Calibration

Calibration should be done as immediately preceding each UVOST logging event. Don't calibrate with RE, then spend time monkeying around with push rig, etc. Wait until the direct push rig is ready to go. Pre-push with dummy tip if obstructions are likely or getting a "straight hole going" is

difficult. Place RE holder on window (making sure window is very clean). Immediately acquire RE with Acq RE command. Extended exposure to laser light can form excimers and photodegradation – causing a morph in waveform shape/intensity. If you have changed fiber optic lengths the software may correct the delay time to achieve proper position in window. Make sure the RE signal level exceeds a 10, 000 pVs minimum but does not exceed 20,000 pVs with 14,000-15,000 pVs about optimum. Try to be consistent (± 1000 pVs) – especially when on the same project/site. Make sure the RE waveform shape "looks right". Compare it to the reference waveform displayed on the scope during the RE acquisition. Extremely noisy/jagged REs, misshapen REs, and missing/low channel contributions indicate damaged or loose fiber optics/filters/detector.

## *Logging*

Follow these steps to acquire a UVOST log:

**Step 1.** With proper RE and background acquired, pertinent log information recorded, and probe in position (window just below (~1 inch) ground surface), activate the Record command.

**Step 2.** If you failed to acquire a recent RE the OST software will alert you that it's not recent (at least one log event old). Proceed with you recent (perhaps you just aborted a "false start"/crooked log) – or cancel out and acquire the RE you forgot to acquire. You can "rescue" an RE if it's for a rational purpose (such as an accidentally aborted log and you want to continue logging and probe is under ground, under water during a barge project, etc.) DO NOT purposefully continue logging without a new RE for each and every log if you're having problems acquiring a new RE due to a problem. FIX the problem, acquire a good RE, then proceed. Failure to acquire a new RE for each log will generate inaccurate data.

**Step 3.** Choose a directory and name for your log. UVOST auto-suggests the name sequentially in an attempt to reduce typing. In order to absolutely avoid accidental overwrite of any OST file, the OST software creates a unique time/date name and uses that name in place of overwrites (even though you said "OK" to the overwrite. If you want to risk it, you can always delete a file from the Save File dialog after you click on it once, but before hitting OK. That prevents the Windows software from reporting an overwrite to the OST and cueing the unique filename routine. The safest method is to choose OK to overwrite – and rename files later.

**Step 4.** Once the name is chosen you are asked to choose whether or not to "zero" the depth. For normal logs you always choose Yes and zero out depth. If you're continuing an aborted log that you want to continue (accidental termination) – choose No. Log should continue at depth where you left off.

**Step 5.** As the log progresses, it is your responsibility to make sure the system is operating properly. Observe the oscilloscope or OST display to watch for unusual events such as:

A. Try to keep the probe advancing at approximately 0.75 inch/sec – your company may choose less – but we do not recommend faster

B. Strange background drifts several feet under (possible fogging), etc.

C. Broken depth cable or poor connection will result in jumps in depth or a loss of depth increase – even though the operator is advancing the probe

D. Incorrect depths would indicate a possible rod length or string pot cal factor mismatch

E. Sudden loss of waveform (flatline) indicates possible fiber optic break due to broken probe

F. depth is advancing – but no new waveform updates aren't showing up – this indicates poor triggering – is Trig'd showing up on oscilloscope every second or so? if not – hit Trigger

50% button on scope or look for other cause such as Stop button on laser being accidentally pushed.

**Step 6.** Once refusal is reached – or target depth is reached – activate the End command. All pertinent data is stored and the oscilloscope scale is automatically returned to the default 50mV/div scale in preparation for next RE.

**Step 7.** Inspect the probe, window, etc. for leaks, breaks, and loose parts in preparation for next the next logging event (push).

## *Printing/Exporting LIF Logs*

Once the push is complete the log can be viewed (a log can be also opened from file and viewed with the OST software) it is necessary to print the log to paper or export it to an electronic image (JPG file). Prior to print/export it is most often desirable to select callout waveforms. Select single waveforms by clicking the log at any depth – which creates a stats bar. Transfer single logs by dragging/dropping the stats bar or with the < bar next to each callout box. Select the average of a region of waveforms along a log by clicking the log, holding down, then releasing at a second depth along the log. Transfer average zone waveforms by dragging/dropping the bottom stats bar or with the < bar next to each callout box. Reasons to select certain depths/regions include:

- Bracketing what appear to be continually affected zones - this helps the client/consultant "summarize" the general NAPL zones and easily jot down depths for future validation sampling, project design, discussion with site owner, etc.
- It's best to bracket large zones of homogenous NAPL - do not span different products
- Highlighting unusual signatures – perhaps to suggest sampling there or to "flag" things the client needs to investigate or discount
- Maybe a background here/there to remind viewer what "clean" looks like
- Any potential "false positives" such as mineral/plant/urban background/highly degraded NAPL – the different waveform should help client understand that "it's nothing to worry about"
- Use caution when highlighting single waveforms from the rising edge of NAPL hits – the waveforms in these area are usually saturated because the oscilloscope scaling wasn't able to fully respond – they are morphed and ugly and cause unnecessary confusion and alarm
- You do not have to start with top and work down – pick a callout "straight across" for neater appearance
- Avoid "crossing" of the depths of multiple callouts as this looks messy/confusing

It is best that the UVOST operator and the client discuss depth/RE scales, depths of interest, etc. ahead of time to hopefully avoid lots of "reprints".

It is suggested that you annotate the callouts (text box under each waveform) in order to guide the client. If it's the usual product you expect then leave it blank – but if it's unusual, significant, or out of the ordinary, guide the viewer with a brief description.

Each time you print/export the settings are saved in a lif.plt (plot) file. That way the same callouts and depths are available later. The OST software (and we) suggest that the very first print/export a log in the filed you save it as field. That way you always know what the client received originally. Subsequent print schemes are saved as well. Later, upon opening, you can choose which of the various schemes to open the file with.

*SOP L-10:*

SOIL SAMPLING USING DIRECT PUSH DRILLING

*Boring Log Form*

*Geoprobe Macro-Core MC5 Soil Sampling System SOP MK3139*

*ASTM D 6282 Geoprobe Soil Sampling*

# SOIL SAMPLING USING DIRECT PUSH DRILLING

## PURPOSE

This Standard Operating Procedure (SOP) *Soil Sampling Using Direct Push Drilling* provides the frame work for collecting continuous core samples of unconsolidated materials using a Geoprobe rig and direct push technology in overburden borings at the Troy Mills Landfill Superfund Site in Troy, New Hampshire. Generally in this procedure, an assembled Macro-Core Soil Sampler is driven into the subsurface and retrieved using a Geoprobe direct push machine.

If an obstruction is met such as a boulder or buried debris, the driller may be required to attempt to penetrate the obstruction by continuing to attempt to advance the sampler. If attempts to penetrate obstruction are unsuccessful, the boring will be abandoned and redrilled approximately 2 to 10 feet away provided appropriate utility clearance exists and authorization is provided by the GZA project manager. If refusal is encountered in the reattempted boring, notify the GZA project manager to determine the appropriate next steps.

Any modifications to this SOP shall be approved in advance by the New Hampshire Department of Environmental Services (NHDES) Project Manager and QA Coordinator, in consultation with the Environmental Protection Agency (EPA).

## EQUIPMENT AND MATERIALS

The driller shall be capable of providing a Geoprobe direct push rig, capable of drilling to the desired depths and have macro-cores (48 inches or 60 inches) for soil sample collection.

For drilling oversight and soil sample collection activities, equipment and materials to be provided by the GZA field engineer/geologist may include, but are not limited to the following:

- Sampling and Analysis Plan (SAP) / Health and Safety Plan (HASP);
- Personal protective equipment;
- Field notebook and clipboard, boring log forms, any special test documentation forms;
- Clean box cutter or other knife to cut plastic macro-core sampler;
- Ruler / measuring tape to determine recovery;
- Stainless bowl(s) / spoons(s);
- Photoionization detector (PID);
- Plastic sheeting;
- Loose ice and a sample cooler;
- Sample labels, chain-of-custody records and custody seals;

- Sample containers including spare containers, preserved as necessary; and
- Decontamination equipment and supplies.

**PROCEDURES**

Refer to the *attached* ASTM D 6282 (attached) and the GeoSearch, Inc. geoprobe soil sampling description sheet for informational purposes. The following summarizes the basic soil sampling procedure sampling:

1.& Before and after each use, thoroughly decontaminate all parts of the soil sampling system according to the Decontamination SOP in the SAP. Parts should be inspected by the driller for wear or damage at this time.

2.& The boring is advanced by direct push into the soil to desired depth in either 48 inches or 60 inch intervals. Once the sampling begins, consecutive soil cores are removed as the outer casing is advanced to greater depths. During sampling, a clean new Teflon macro-core liner is used for each soil core.

3.& Once the driller provides GZA field personnel with the sample liner determine the appropriate sample interval as indicated by the maximum LIF signal response observed and confirm by field screening the sample core with a PID in accordance with Field Monitoring Photoionization Detector SOP in the SAP.

To minimize the loss of VOCs during field screening of the core, PID soil readings will be taken through small holes cut into the macro-core using a clean knife to allow the PID probe end to be inserted into the sleeve. Ensure no soil is entrained in the PID probe tip when conducting field screening.

4.& All soil sampling will be taken from the section of the sleeve which contains LNAPL impacted soil according to the LIF scanning and confirmed by the PID screening. In the event no VOCs are detected by the PID screening, it is possible that the Geoprobe soil sampling device did not capture the soil of interest and it may be necessary to try re-sampling an adjacent location (discuss with GZA project manager).

The VOC soil sample will be taken at the location of the highest PID reading from within the macro-core. To collect the VOC soil sample, the Teflon macro-core will be cut using a clean knife beginning at the opposite end of the core catcher. The designated interval for VOC soil sample collection will then be sampled quickly right from the macro-core (using the methanol preserved Volatile Organic Analysis (VOA) vials and disposable syringe).

Note that VOC sample collection will be conducted in accordance with the NHDES SOP "Preservation of VOCs in Soil Samples" included in the current NHDES Hazardous Waste Remediation Bureau Master Quality Assurance Project Plan (HWRB Master QAPP). Using the disposable syringe, the proper volume of soil is added to the container until the volume in the VOA vial reaches the pre-marked line established by the laboratory. A separate dry weight sample will be necessary – fill the disposable syringe with soil, transfer the soil into an unpreserved VOA vial, label the vial and place it in the plastic bag with the VOC sample vial.

Transfer soil from the macro-core to a pre-decontaminated stainless steel mixing bowl. Assuming sufficient soil is available to fill the remaining sample containers, thoroughly mix soil to obtain a homogeneous sample, and then transfer to the appropriate sample containers using a pre-decontaminated steel spoon.

The soil sample container for the SVOCs (base neutrals), carbonate alkalinity, specific conductance, ORP and COD is to be filled after the VOC container. The metals and TPH sample container is to be filled last.

In the event that insufficient LNAPL impacted soil from the designated interval is available to fill all three soil sample containers, the order of sampling is still the same as discussed above. Document in your field notes the soil recovery of each core and which samples were actually collected, and which samples could not be collected due to insufficient soil recovery.

5. After collection of the samples, place samples in re-sealable plastic bags and then in loose ice within the cooler.

6. If a field duplicate sample is required, fill a separate container for each analysis immediately following the actual field sample collection and it should be in the same priority order as indicated above. Note that the VOC sample shall be collected directly from the macro-core, prior to sample mixing. Duplicate samples are not intended to be blind duplicate samples. They should be designated with a "DUP" after the sample designation (i.e., TRY_SO-A11-2.5 DUP) as indicated in the SAP. Refer to **Table 5** included in the SAP for specific quality control (QC) sampling requirements.

7. If an equipment blank is required for soil sampling equipment, following sample collection and after equipment decontamination, gently pour de-ionized (DI) water over the cutting shoe and other drilling apparatus if used (i.e. core catcher), stainless steel bowl, and mixing spoon used to collect the soil samples. Collect the rinsate that flows off the equipment into the appropriate sample containers. Refer to **Table 5** included in the SAP for specific QC sampling requirements.

8. Soils will be logged and classified following collection of VOC soil samples in accordance with the *Burmister Classification System SOP* and the *Guide for Description of Soils SOP in the SAP*. Refer to the attached form for an example boring log field form.

## RECORDS AND DOCUMENTATION

All data and sampling information will be recorded as specified in the SAP.

Refer to the *Burmister Classification System* SOP in the SAP relative to documenting and recording soil classifications.

Refer to the *Chain-of-Custody, Sample Packaging and Shipment Procedures* SOP in the SAP for documentation requirements and the *Sampling Equipment Decontamination Procedures SOP* for decontamination requirements.

## SPECIAL NOTES

Refer to ASTM D 6282 (attached) and the GeoSearch, Inc. geoprobe soil sampling description sheet for supplemental information.

## APPLICABLE STANDARDS AND REFERENCES

Geoprobe Macro-Core MC5 SOP MK3139 1.25 Inch Light Weight Center Rod Soil Sampling System

ASTM D 6282-98 Standard Guide for Direct Push Soil Sampling for Environmental Site Characterizations

ATTACHMENTS

GZA GeoEnvironmental, Inc. Boring Log

Geoprobe Macro-Core MC5 SOP MK3139

ASTM D 6282

GZA
GeoEnvironmental, Inc.
*Engineers and Scientists*

Boring No.:
Page: 1 of
File No.:
Check:

Contractor:
Foreman:
Logged by:
Date Start/Finish:
Boring Location: See Plan
GS Elev.: Datum:

| | Auger/ Casing | Sampler |
|---|---|---|
| Type: | | SS |
| I.D.: | | 1.37 in |
| Hammer Wt.: | | 140 lb |
| Hammer Fall: | | 30 in |
| Rig Type: | | |

GROUNDWATER READINGS

| Date | Time | Depth | Casing | Stab |
|---|---|---|---|---|
| | | | | |
| | | | | |
| | | | | |
| | | | | |
| | | | | |

| Depth ( ft) | Sample Information: Casing Blows | No. | Pen./ Rec. ( in) | Depth ( ft) | Blows (/6") | N Value or Field Test Data | Sample Description & Classification | Stratum Desc. | Remarks | Equipment Installed |
|---|---|---|---|---|---|---|---|---|---|---|
| 5 | | | | | | | | | | |
| 10 | | | | | | | | | | |
| 15 | | | | | | | | | | |
| 20 | | | | | | | | | | |
| 25 | | | | | | | | | | |

REMARKS

All depth measurements are approximate. Stratification lines represent approximate boundary between soil types, transitions may be gradual. Water level readings have been made at times and under conditions stated. Fluctuations of groundwater may occur due to other factors than those present at the time measurements were made.

Boring No.:

GZA
GeoEnvironmental, Inc.
*Engineers and Scientists*

Boring No.:
Page: 2 of 3
File No.:
Check:

| Depth ( ft) | Sample Information: Casing Blows | No. | Pen./ Rec. ( in) | Depth ( ft) | Blows (/6") | N Value or Field Test Data | Sample Description & Classification | Stratum Desc. | Remarks | Equipment Installed |
|---|---|---|---|---|---|---|---|---|---|---|
| 35 | | | | | | | | | | |
| 40 | | | | | | | | | | |
| 45 | | | | | | | | | | |
| 50 | | | | | | | | | | |
| 55 | | | | | | | | | | |
| 60 | | | | | | | | | | |

**REMARKS**

All depth measurements are approximate. Stratification lines represent approximate boundary between soil types, transitions may be gradual. Water level readings have been made at times and under conditions stated. Fluctuations of groundwater may occur due to other factors than those present at the time measurements were made.

Boring No.:

# GEOPROBE® MACRO-CORE® MC5
# 1.25-INCH LIGHT-WEIGHT CENTER ROD SOIL SAMPLING SYSTEM

## STANDARD OPERATING PROCEDURE

**Technical Bulletin No. MK3139**

**PREPARED: January, 2011**

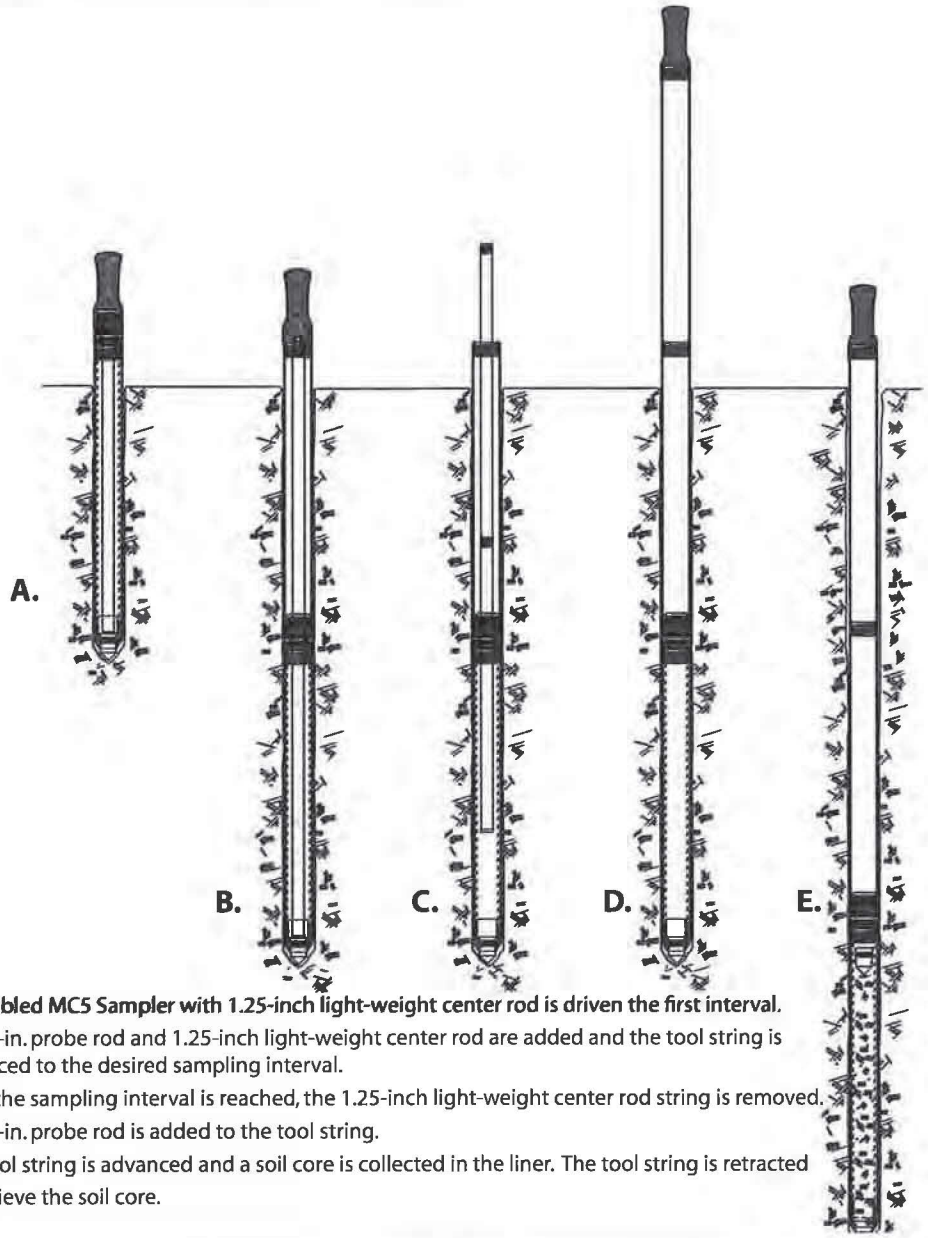


A. **Assembled MC5 Sampler with 1.25-inch light-weight center rod is driven the first interval.**
B. A 2.25-in. probe rod and 1.25-inch light-weight center rod are added and the tool string is advanced to the desired sampling interval.
C. Once the sampling interval is reached, the 1.25-inch light-weight center rod string is removed.
D. A 2.25-in. probe rod is added to the tool string.
E. The tool string is advanced and a soil core is collected in the liner. The tool string is retracted to retrieve the soil core.

**OPERATION OF THE MACRO-CORE® MC5 SOIL SAMPLING SYSTEM**

**Geoprobe® and Geoprobe Systems®, Macro-Core®, and Direct Image® are Registered Trademarks of Kejr, Inc., Salina, Kansas**

**Macro-Core® and Large Bore Soil Samplers manufactured under US Patent 5,606,139.**

**Macro-Core® Closed-Piston Drive Point manufactured under US Patent 5,542,481**

©2011 Kejr, Inc.
ALL RIGHTS RESERVED
No part of this publication may be reproduced or transmitted in any form or by any means, electronic or mechanical, including photocopy, recording, or any information storage and retrieval system, without written permission from Kejr, Inc.

# 1.0 OBJECTIVE

The objective of this procedure is to collect a representative soil sample at depth and recover it for visual inspection and/or chemical analysis.

# 2.0 BACKGROUND

## 2.1 Definitions

**Geoprobe®*:** A brand name of high quality, hydraulically-powered machines that utilize both static force and percussion to advance sampling and logging tools into the subsurface. The Geoprobe® brand name refers to both machines and tools manufactured by Geoprobe Systems®, Salina, Kansas. Geoprobe® tools are used to perform soil core and soil gas sampling, groundwater sampling and testing, soil conductivity and contaminant logging, grouting, and materials injection.

**Geoprobe® and Geoprobe Systems® are registered trademarks of Kejr, Inc., Salina, Kansas.*

**Macro-Core® MC5 Soil Sampler**:** A solid barrel, direct push device for collecting continuous core samples of unconsolidated materials at depth. Although other lengths are available, the standard Macro-Core® MC5 Sample Tubes come in lengths of 48 inches and 60 inches with an outside diameter of 2.25 inches. Samples are collected inside a removable liner. The Macro-Core® MC5 Sampler may be used in an open-tube or closed-point configuration.

***Macro-Core® is a registered trademarks of Kejr, Inc., Salina, Kansas.*

**Liner:** A removable/replaceable, thin-walled tube inserted inside the Macro-Core® MC5 sample tube for the purpose of containing and storing soil samples. While other lengths are available, the most common Macro-Core® MC5 Liners are 48 inches and 60 inches in length. The liner length should correspond to the length of the sample tube used. Liner materials include stainless steel, Teflon®, and PVC.

**1.25-inch Light-Weight Center Rods:** Used as the inner Rod String for Macro-Core® MC5 sampling. 1.25-inch Light-Weight Center rods come in lengths of 48 inches and 60 inches. They provide a weight reduction of up to 64% over standard 1.25-inch probe rods.

## 2.2 Discussion

In this procedure, an assembled Macro-Core® MC5 Soil Sampler is driven one sampling interval into the subsurface and retrieved using a Geoprobe® direct push machine. The collected soil core is removed from the sampler along with the used liner. After decon, the Macro-Core® sampler is reassembled using a new liner. The clean sampler is then advanced back down the same hole to collect the next soil core. The Macro-Core® Sampler may be used as an open-tube or closed-point sampler.

The Macro-Core® MC5 Soil Sampler is commonly used as an open-tube sampler (Fig. 2.1A). In this configuration, coring starts at the ground surface with a sampler that is open at the leading end. The sampler is driven into the subsurface and then pulled from the ground to retrieve the first soil core. In stable soils, an open-tube sampler is advanced back down the same hold to collect the next core.

In unstable soils which tend to collapse into the core hold, the Macro-Core® MC5 Sampler can be equipped with a 1.25-inch Center Rod Closed-Point assembly (Fig 2.1B). The point fits firmly into the cutting shoe and is held in place by the 1.25-inch light-weight center rods. The Macro-Core® MC5 Center Rod System prevents collapsed soil from entering the sampler as it is advanced to the bottom of an existing hole, thus ensuring collection of a representative sample. Once the 1.25-inch light weight center rod system is removed, the point

will be pushed up the liner during the next sampling interval. The point assembly is later retrieved from the sampler with the liner and soil core.

The Macro-Core® MC5 Soil Sampler is a true discrete sampler. It can be driven through undisturbed soil to a desired depth using the 1.25-inch Light Weight Center Rod System. Once the 1.25-inch light-weight center rods are removed, a representative sample is recovered from the desired depth.

Loose soils may fall from the bottom of the sampler as it is retrieved from depth. The MC Core Catcher (Fig. 3.1) alleviates this problem. Excellent results are obtained when the core catcher is used with saturated sands and other non-cohesive soils. A core catcher should not be used with tight soils as it may actually inhibit sample recovery. In that case, a MC Spacer Ring or extended shank cutting shoe can be used. Constructed of PVC, the core catcher is suitable for use with all Geoprobe® liners.

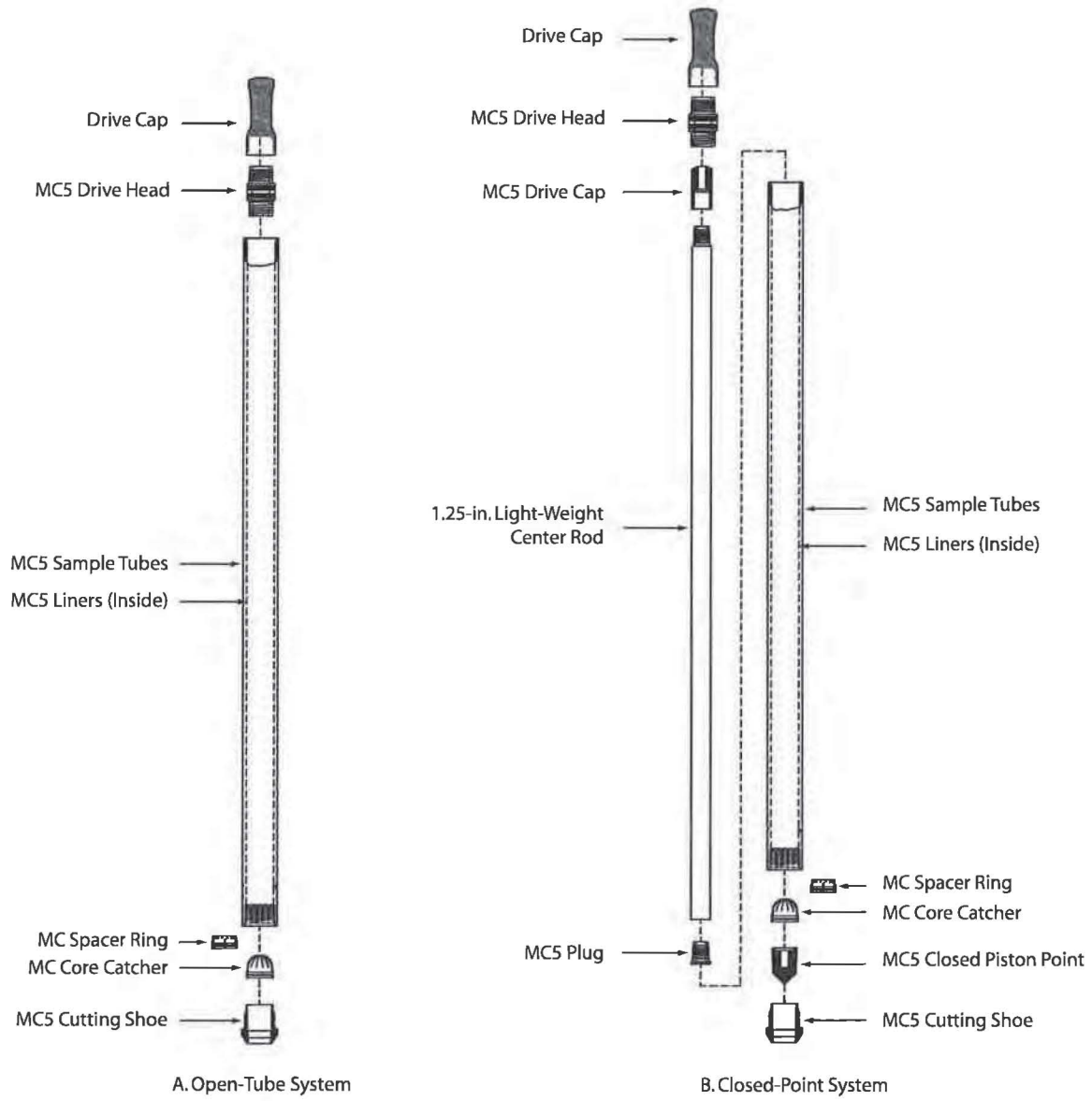


**Figure 2.1**
**Macro-Core® MC5 Soil Sampler Configurations**

## 3.0 TOOLS AND EQUIPMENT

The following tools and equipment can be used to recover representative soil cores with the MC5 Soil Sampling System. Sample tubes, 1.25-inch light-weight center rods, probe rods, and liners all need to be of equal length in order to obtain a sample. Refer to Figure 3.1 for identification of the specified parts. Additional tooling options are available in Appendix A.

| MC5 Sampler Parts | Part Number |
|---|---|
| MC5 Drive Head, 2.25 in. bored | 28646 |
| MC5 Drive Head, 2.125 in. bored | 23640 |
| MC5 Sample Tubes, 60 in | 22992 |
| MC5 Sample Tubes, 48 in | 22923 |
| MC5 Sample Tubes, 1 m | 24239 |
| MC5 Sample Tubes, 36 in | 24238 |
| MC5 Sample Tubes, 24 in | 24237 |
| MC5 Cutting Shoe, standard, 2.25 in. OD | 22922 |
| MC5 Cutting Shoe, undersized, 1.35 in. ID | 23957 |
| MC5 Cutting Shoe, standard, 2.25 in. OD (extended shank) | 23978 |
| MC5 Cutting Shoe, undersized, 1.35 in. ID (extended shank) | 28237 |
| MC5 Cutting Shoe, undersized, 1.25 in. ID (extended shank) | 26078 |
| MC5 Cutting Shoe, Heavy Duty, 1.35 in. ID, | 29552 |
| MC5 Closed Piston Point, standard | 28113 |
| MC5 Closed Piston Point, undersized | 26865 |

| Center Rods (1.25 in.) and Center Rod Accessories | Part Number |
|---|---|
| 1.25-in. Center Rod, 60 in. Lightweight | 27600 |
| 1.25-in. Center Rod, 48 in. Lightweight | 21900 |
| Probe Rod, 1.25 in. x 1 m | AT1239 |
| Probe Rod, 1.25 in. x 36 in | AT1236 |
| Probe Rod, 1.25 in. x 24 in | AT1224 |
| MC5 Drive Cap, 1.25 in. Center Rod, Threadless | 23639 |
| MC5 Plug Threaded, 1.25 in. | 23641 |
| 1.25 in. Pull Cap | AT1204 |

| | Part Numbers for Specific Probe Rod OD | |
|---|---|---|
| Probe Rods and Probe Rod Accessories | 2.25-in. OD | 2.125-in. OD |
| Probe Rod, 60 in | 25301 | AT2160 |
| Probe Rod, 48 in | 25300 | AT2148 |
| Probe Rod, 1 m. | 25352 | AT2139 |
| Probe Rod, 2.125 in. x 36 in. | | AT2136 |
| Probe Rod, 2.125 in. x 24 in. | | 13072 |
| Drive Cap, GH60 Series, Threadless. | 31530 | 8397 |
| Drive Cap, GH40 Series, Threadless | 31405 | |
| Drive Cap, GH40 Series, Threaded | | AT2101 |
| Pull Cap | 25298 | AT2104 |

| MC5 Liners, Accessories, and Miscellaneous Tools | Part Number |
|---|---|
| MC Liners, 60 in. (66 liners) | 10074 |
| MC Liners, 48 in. (66 liners) | AT927K |
| MC Liners, 1m. (66 liners) | AT928K |
| MC Liners, 36 in. (66 liners) | AT921K |
| MC Liners, 24 in. (66 liners) | AT926K |
| MC Core Catcher | AT8531 |
| MC Spacer Ring | AT8532 |
| MC Spacer Ring (Bulk Box of 500) | AT8533K |
| Vinyl End Caps (Package of 66) | AT726K |
| Liner Cutter | AT8010 |
| Universal Liner Holder | 22734 |
| Rod Wiper Weldment | 23633 |
| Rod Wiper Doughnuts, 2.125-in and 2.25-in. | 26876 |
| Two Pipe Wrenches | |

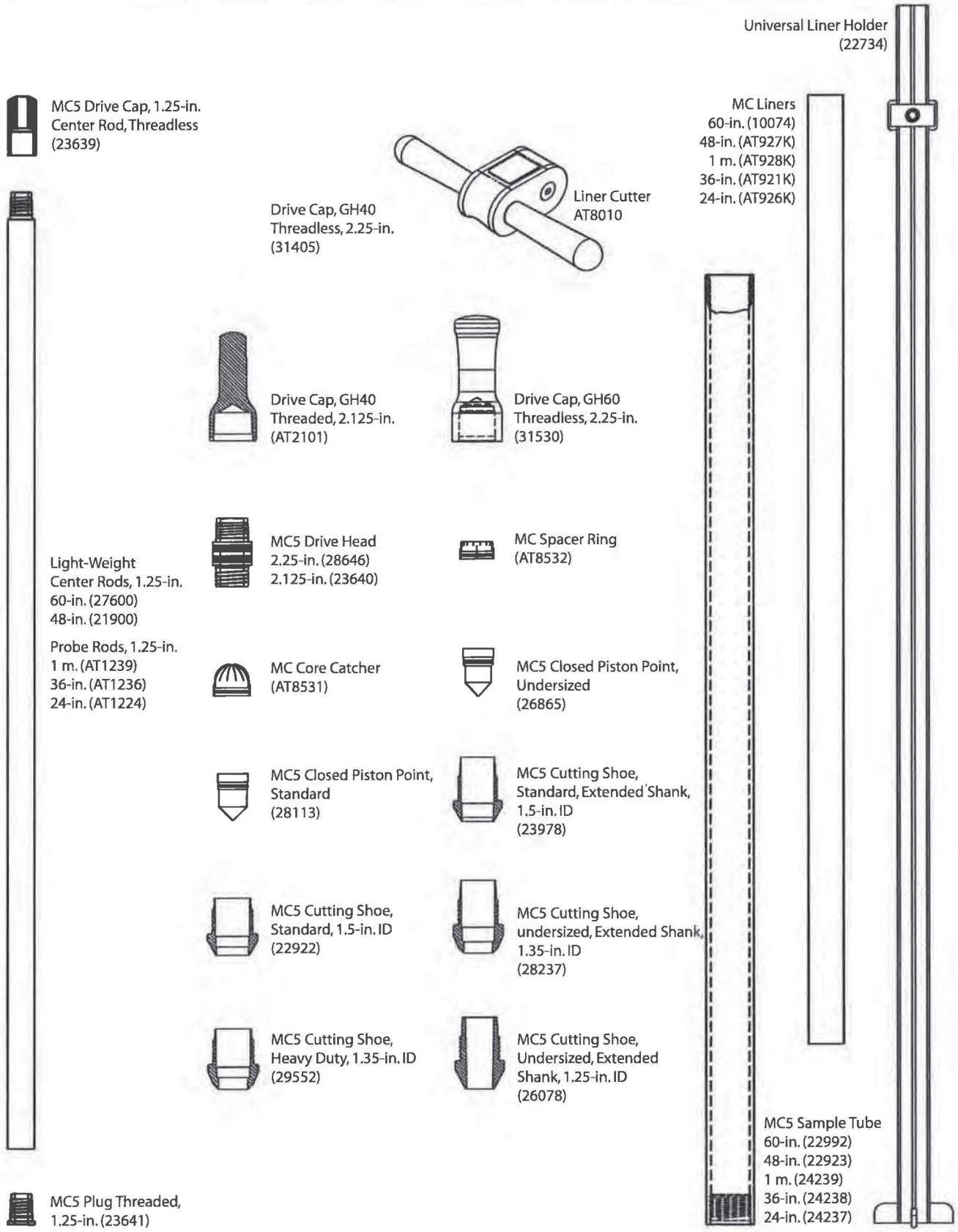


**Figure 3.1**
**Macro-Core® MC5 Soil Sampler Parts**

## 3.1 Tool Options

Five major components of the MC5 Soil Sampling System are sample tubes, probe rods, 1.25-inch light-weight center rods, sample liners, and cutting shoes. These items are manufactured in a variety of sizes to fit the specific needs of the operator. This section identifies the specific tool options available for use with the MC5 Soil Sampling System.

***Sample Tubes***
MC5 Sample tubes come in lengths of 60 inches (1524 mm), 48 inches (1219 mm), 1 meter, 36 inches (914 mm), and 24 inches (610 mm).

***Probe Rods***
Standard Geoprobe® 2.125-inch and 2.25-inch OD probe rods are required to operate the MC5 Soil Sampling System. The specific length of rods may be selected by the operator. The most common rod lengths used in MC5 Soil Sampling are the 60-inch and 48-inch rods.

***1.25-inch Light-Weight Center Rods***
1.25-inch Light-Weight Center Rods (1.25-inch / 32-mm OD) are recommended for the inner rod string of the MC5 system when utilizing an outer casing of 48- or 60-inch long rods. Choose the light-weight rod length that matches the length of rods used for the outer casing (48-inch light-weight rods with 48-inch outer casing, etc.). Currently, standard Geoprobe® 1.25-inch probe rods must be used with 24-inch, 36-inch, and 1-meter MC5 Sample Tubes.

A weight reduction of up to 64% is provided by the 1.25-inch Light-Weight Center Rods over standard 1.25-inch probe rods. As a result, considerably less energy is expended when retrieving the 1.25-inch Light-Weight Center Rods from within the outer casing during operation of the MC5 System.

***Sample Liners***
Sample liners are made of heavy-duty clear plastic for convenient inspection of the soil sample. Nominal lengths of 24 inches, 36 inches, 1 meter, 48 inches, and 60 inches are available. Choose the liner length corresponding to the length of the sample tube used (e.g. 60-inch liners with 60-inch sample tubes).

***Cutting Shoes***
Six cutting shoes are available for use with the MC5 Soil Sampling System (Fig. 3.2). The extended shank cutting shoes (23978, 28237, and 26078) fit inside the sample liner and help soil pass freely into the liner. The other three cutting shoes (22922, 23957, 29552) require an MC Core Catcher (AT8531) or MC Spacer Ring (AT8532) in order to properly connect to the sample liners.

The most prominently used cutting shoes are the two "standard" cutting shoes (22922 and 23978). These cutting shoes collect a 1.5-inch (38-mm) diameter soil core.

Undersized cuttings shoes (23957, 28237, and 29552) collect a smaller 1.35-inch (34-mm) soil core and are used in formations with plastic clays or other soil types that lead to overfilling of the sampler liner. Of these, the 29552 and 28237 cutting shoes are also thicker at the leading end for increased durability in harsh conditions where cobbles or large gravel are present.

Soil formations with highly plastic clays may call for an even smaller soil core. In these conditions, a 26078 cutting shoe with its 1.25-inch (32-mm) soil core is most effective.

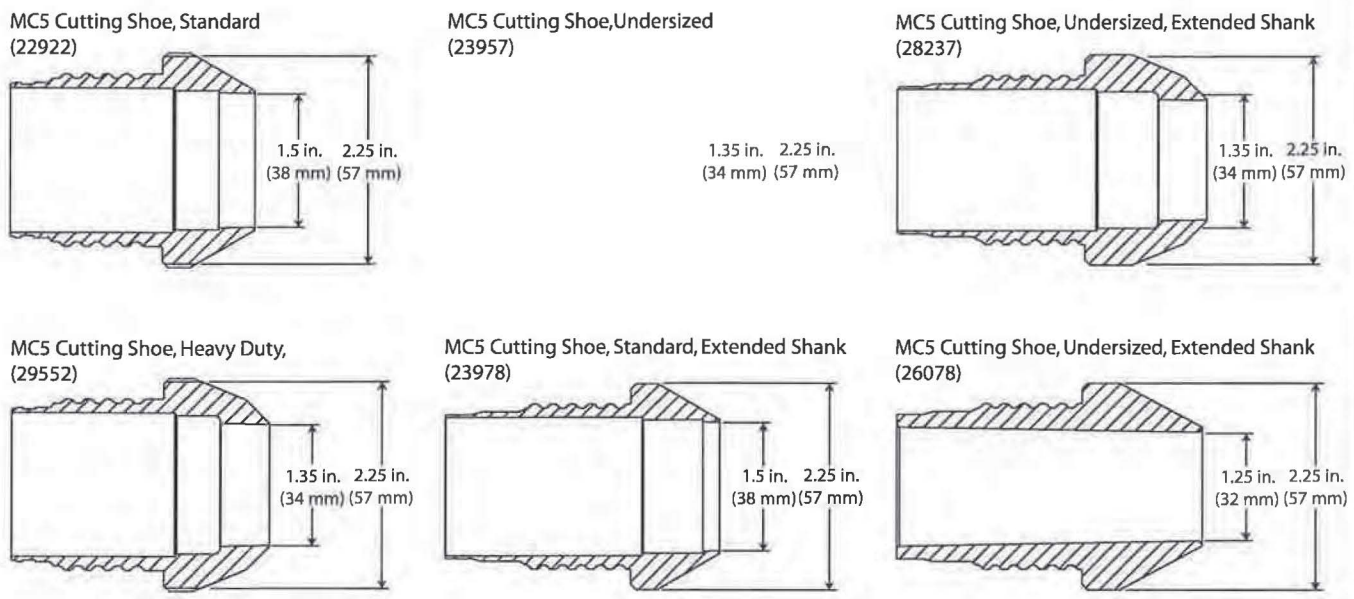


**Figure 3.2**
**Cutting Shoe Options for Macro-Core® MC5 Soil Sampler**

## 4.0 OPERATION

All parts shown in illustrations are those most commonly used configuration for the MC5 Sampling System. Refer to Section 3.0 for part numbers and additional tooling options.

### 4.1 Decontamination

Before and after each use, thoroughly clean all parts of the soil sampling system according to project requirements. Parts should be inspected for wear or damage at this time. During sampling, a clean new liner is used for each soil core.

Cleaning inside the probe rods and MC5 sample tubes is accomplished with the nylon brushes and extension rods listed in Appendix A. Thread a nylon brush and handle onto an extension rod of suitable length. Using clean water and phosphate-free soap, cycle the brush inside the probe rod or sample tube to remove contaminants. Rinse with clean water and allow to air dry.

### 4.2 Field Blank

It is suggested that a field blank be taken on a representative sample liner prior to starting a project and at regular intervals during extended projects. Liners can become contaminated in storage. A field blank will prove that the liners do not carry contaminates which can be transferred to soil samples. The following information is offered as an example method which may be used to take a field blank. Make the appropriate modifications for the specific analytes of interest to the investigation.

*Example Procedure Required Equipment*

MC Liner ..... (1)
MC Vinyl End Caps ..... (2)
Distilled Water ..... (100 ml)
VOA Vial (or other appropriate sample container) ..... (1)

1. Place a vinyl end cap on one end of the liner.
2. **Pour 100 milliliters of distilled water (or other suitable extracting fluid) into the liner.**
3. Place a vinyl end cap on the open end of the liner.
4. From the vertical position, repeatedly invert the liner so that the distilled water contacts the entire inner surface. Repeat this step for one minute.
5. Remove one end cap from the liner, empty contents into an appropriate sample container, and cap the container.
6. Perform analysis on the extract water for the analytes of interest to the investigation.

## 4.3 Open-Tube Sampler Assembly

### 1a. Using the MC Core Catcher

Place the open end of an MC Core Catcher over the threaded end of an MC5 Cutting Shoe (22992, 23957, 29552) as shown in Figure 4.2. Apply pressure to the core catcher until it snaps into the machined groove on the cutting shoe. The core catcher should be used in loose soils, especially saturated sands (non-cohesive soils). Use of the core catcher is not necessary in tough, cohesive soils or tight clays, and may interfere with sampling especially in soft clays. The **"fingers" of the core catcher flex outward to let soil move into the** liner while sampling.

**Figure 4.1. The spacer ring fits securely onto the MC5 Cutting Shoe.**

### 1b. Using the MC Spacer Ring

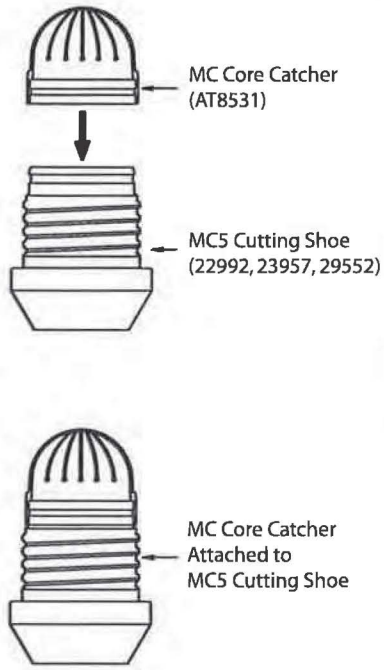


**Figure 4.2**
**Core Catcher Attachment**

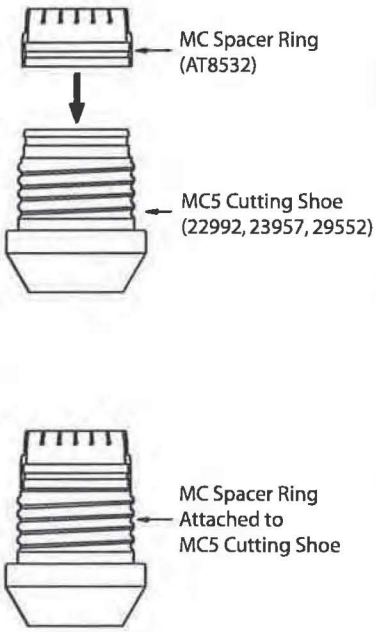


**Figure 4.3**
**Spacer Ring Attachment**

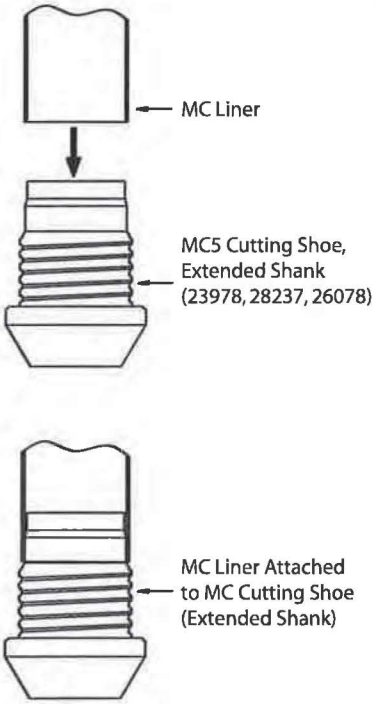


**Figure 4.4**
**Liner Attachment on Extended Shank**

Push the base of an MC Spacer Ring onto the threaded end of an MC5 Cutting Shoe (22992, 23957, 29552) until it snaps into the machined groove on the cutting shoe (Fig. 4.1 and Fig. 4.3). Spacer rings should be used when sampling cohesive soils. It allows soil to pass freely over the junction between the liner and cutting shoe.

**1c. Using the Extended Shank Cutting Shoe**

The cutting shoes with extended shanks (23978, 28237, 26078) do not use core catchers or spacer rings. MC5 Liners should securely slide onto the end of these cutting shoes (Fig. 4.4). The extended shank cutting shoes should only be used when sampling cohesive soils. When sampling loose soils, especially saturated sands (non-cohesive soils), a cutting shoe with an MC Core Catcher is recommended.

2. Place either end of the liner onto the spacer ring or core catcher (Fig. 4.6). If you are using a cutting shoe with an extended shank, do not use a spacer ring or core catcher (Fig. 4.7). The liner should fit securely onto the spacer ring, core catcher, or cutting shoe.

3. Slide whole assembly into either end of the sample tube (Fig. 4.8). Thread the cutting shoe onto the sample tube (Fig. 4.9). If the thread is clean, it should easily thread on by hand. In some cases, a wrench may be necessary for tightening. There shouldn't be a gap between the cutting shoe and sample tube.

4. Thread an MC5 Drive Head into the top of the sample tube (Fig. 4.10). Securely tighten the drive head by hand. Ensure that the end of the sample tube contacts the machined shoulder of the drive head.

**Sampler Assembly is Complete**

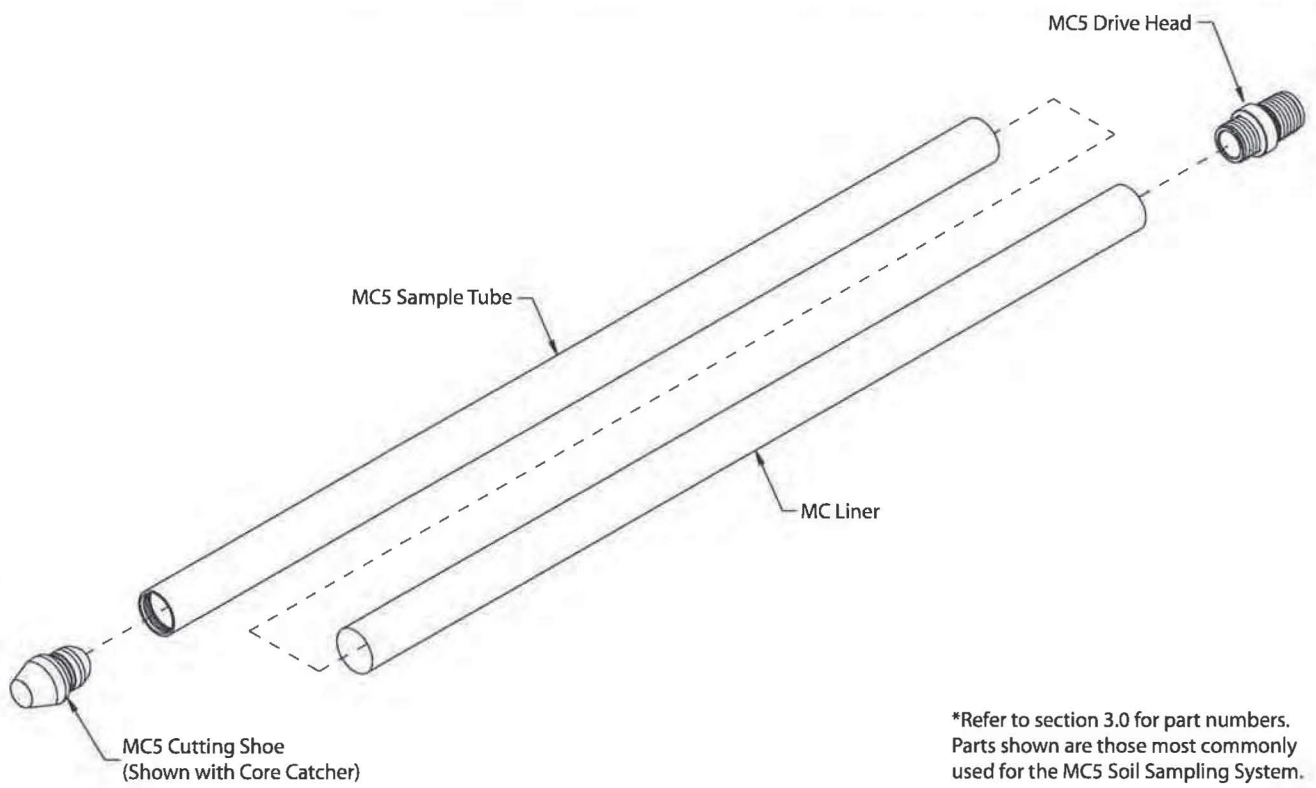


*Refer to section 3.0 for part numbers. Parts shown are those most commonly used for the MC5 Soil Sampling System.

**Figure 4.5**
**MC5 Open-Tube Sampler Assembly**

**Figure 4.6. Place either end of the liner onto the spacer ring or core catcher. The liner should fit securely.**

**Figure 4.7. Place either end of the liner onto the extended shank cutting shoe. (This is used in place of a spacer ring or core catcher)**

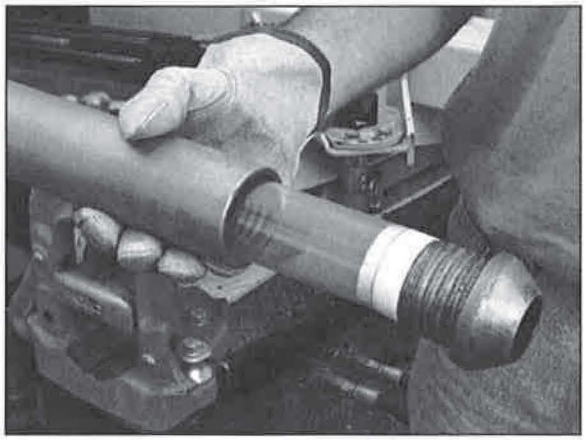

**Figure 4.8. Slide whole assembly into either end of the sample tube.**

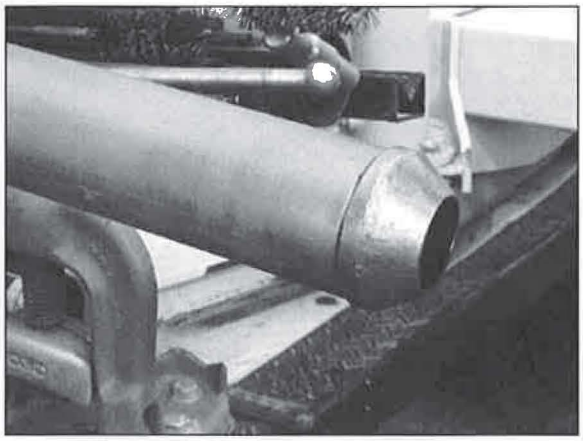

**Figure 4.9. Thread the cutting shoe onto the sample tube.**

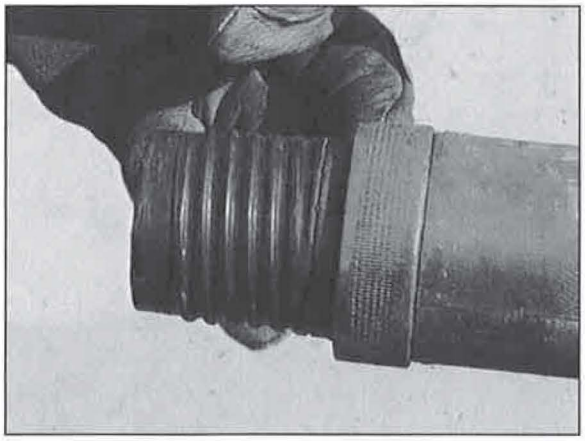

**Figure 4.10. Thread the MC5 Drive Head onto the opposite end of the sample tube. Tighten by hand.**

## 4.4 MC5 Closed-Point Sampler Assembly

The Macro-Core® 1.25-inch Light-Weight Center Rod Sampling System seals the leading end of the sampler with a point (Fig. 4.11) assembly that is held in place with a 1.25-inch light weight center rod. Once advanced to the top of the sampling interval, the 1.25-inch Light-Weight Center Rods are removed from the probe rod string.

1. Install an O-ring in the machined groove on the piston rod point (Fig. 4.12).

2. Push the MC5 Closed Piston Point (28113 or 26865) completely into the cutting shoe as shown in Figure 4.12. Note that the standard point (28113) is used with 1.5-inch (38-mm) ID cutting shoes and the undersized point (26865) is for cutting shoes with a 1.35-inch (34-mm) ID.

**Figure 4.11. The MC5 Closed Piston Point slides into the cutting shoe.**

**3a. Using the MC Core Catcher**

Place the open end of an MC Core Catcher over the threaded end of an MC5 Cutting Shoe (22992, 23957, 29552) as shown in Figure 4.13. Apply pressure to the core catcher until it snaps into the machined groove on the cutting shoe. The core catcher should be used in loose soils, especially saturated sands (non-cohesive soils). Use of the core catcher is not necessary in tough, cohesive soils or tight clays, and may interfere with sampling especially in soft clays. The "fingers" of the core catcher flex outward to let soil move into the liner while sampling.

**3b. Using the MC Spacer Ring**

Push the base of an MC Spacer Ring onto the threaded end of an MC5 Cutting Shoe (22992, 23957, 29552) until it snaps into the machined groove on the cutting shoe (Fig. 4.14). Spacer rings should be used when sampling cohesive soils. It allows soil to pass freely over the junction between the liner and cutting shoe.

**3c. Using the Extended Shank Cutting Shoe**

The cutting shoes with extended shanks (23978, 28237) do not use core catchers or spacer rings. MC5 Liners should securely slide onto the end of these cutting shoes (Fig. 4.15). The extended shank cutting shoes shoud only be used when sampling cohesive soils. When sampling loose soils, especially saturated sands (non-cohesive soils), a cutting shoe with an MC Core Catcher is recommended.

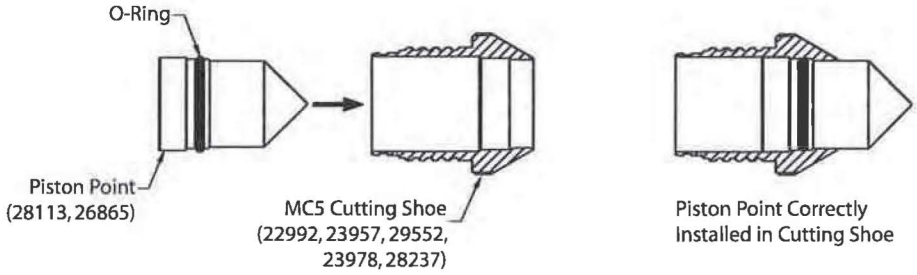


**Figure 4.12**
**Installation of MC5 Closed Piston Point Assembly in MC5 Cutting Shoe**

**Figure 4.13**
**Core Catcher Attachment With Point Assembly**

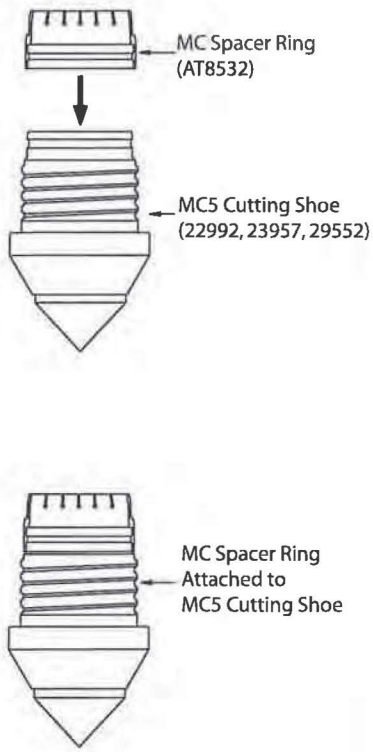


**Figure 4.14**
**Spacer Ring Attachment With Point Assembly**

**Figure 4.15**
**Liner Attachment on Extended Shank With Point Assembly**

**Refer to Figure 4.16 for MC5 Closed-Point Sampler Assembly**

4. Place either end of the liner onto the spacer ring or core catcher (Fig. 4.18). If you are using a cutting shoe with an extended shank, do not use a spacer ring or core catcher (Fig. 4.19). The liner should fit securely onto the spacer ring, core catcher, or cutting shoe.

5. Slide whole assembly into either end of the sample tube (Fig. 4.20). Thread the cutting shoe onto the sample tube (Fig. 4.21). If the thread is clean, it should easily thread on by hand. In some cases, a wrench may be necessary for tightening. There shouldn't be a gap between the cutting shoe and sample tube.

6. Thread an MC5 Drive Head into the top of the sample tube. Securely tighten the drive head by hand. Ensure that the end of the sample tube contacts the machined shoulder of the drive head (Refer to Figure 4.10).

**continued on page 14**

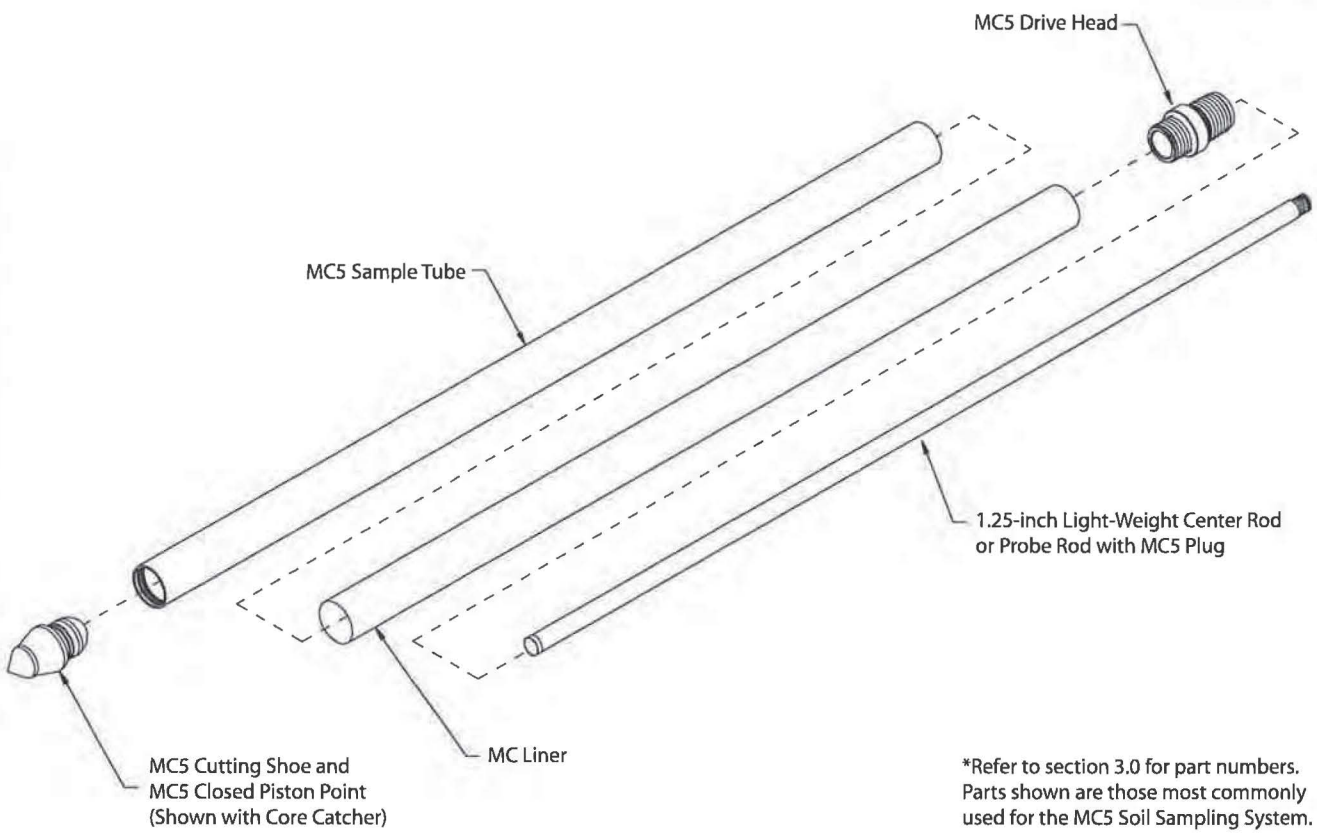


**Figure 4.16**
**MC5 Closed-Point Sampler Assembly**

7. Thread an MC5 Plug (23641) onto 1.25-inch light-weight center rod (Fig.4.22). Note that light-weight center rods are only available in 48-inch and 60-inch lengths. Utilize 1.25-inch probe rods if other lengths are required.

8. Insert the light-weight center rod and MC5 Plug into sample tube assembly (Fig.4.23), sending the plug end in first. Allow it to come in contact with the top of the Piston Point (Fig.4.17).

**Sampler Assembly is Complete**

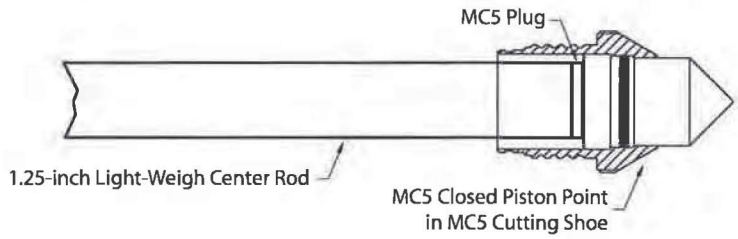


**Figure 4.17**
**MC5 Closed-Point Center Rod Assembly**

**Figure 4.18. Place either end of the liner onto the spacer ring or core catcher. The liner should fit securely.**

**Figure 4.19. Place either end of the liner onto the extended shank cutting shoe. (This is used in place of a spacer ring or core catcher)**

**Figure 4.20. Slide whole assembly into either end of the sample tube.**

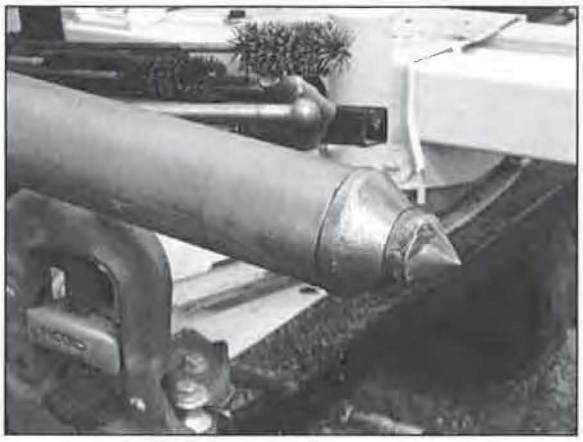

**Figure 4.21. Thread the cutting shoe and point onto the sample tube.**

**Figure 4.22. The MC5 Plug is threaded onto the end of the 1.25-inch light-weight center rod.**

**Figure 4.23. The MC5 Plug and a 1.25-inch light-weight center rod are inserted into the sample tube.**

## 4.7 Open-Tube Sampling

The MC5 Open-Tube Sampler is used to gather continuous soil cores beginning from ground surface. A representative soil sample is obtained by driving the assembled sampler one sampling interval into the subsurface through undisturbed soil. Upon retrieving the sampler, the liner and soil core are removed. The sampler is then properly decontaminated, reassembled with a new liner, and inserted back down the same hole to collect the next soil core.

Instructions for operating the MC5 Open-Tube Sampler are given in this section.

1. Place a drive cap onto the drive head (Fig. 4.24) of an assembled Open-Tube Sampler (Refer to Section 4.3 for sampler assembly).

2. Raise the probe unit hammer assembly to its highest position by fully extending the probe cylinder.

3. Position the MC5 Sampler directly under the hammer with the cutting shoe centered between the toes of the probe foot. The sampler should now be parallel to the probe derrick. Step back from the unit and visually check sampler alignment (Fig. 4.25).

4. Apply static weight and hammer percussion to advance the sampler until the drive head reaches the ground surface. (Fig. 4.27A)

   **NOTE: Activate hammer percussion whenever collecting soil. Percussion helps shear the soil at the leading end of the sampler so that it moves into the sample tube for increased recovery.**

5. Raise the hammer assembly a few inches to provide access to the top of the sampler.

6. Remove the drive cap and thread a pull cap onto the sampler drive head (Fig. 4.26).

7. Lower the hammer assembly and hook the hammer latch over the pull cap. Raise the hammer assembly to pull the sampler completely out of the ground. If a winch is available, it can be used with a pull plate to retract the tool string. A Rod Grip Pull Handle can also be used to retract the tool string.

8. Proceed to Section 4.9 for instructions on recovering the soil core from the MC5 Sampler.

To sample consecutive soil cores, advance a clean sampler down the previously opened hole (Fig. 4.27B) to the top of the next sampling interval (Fig. 4.27C). Drive the tool string the length of the sampler to collect the next soil core (Fig. 4.27D). Switch to an MC5 Center Rod Sampler if excessive side slough is encountered.

**NOTE: Use caution when advancing or retrieving the sampler within an open hole. Low side friction may allow the sampler and probe rods to drop down the hole when released. To prevent equipment loss, hold onto the tool string with a pipe wrench when needed.**

**Figure 4.24. Place drive cap onto sampler drive head.**

**Figure 4.25. The sampler should be parallel to the probe derrick for driving.**

**Figure 4.26. The pull cap is one way to remove the sampler from the ground.**

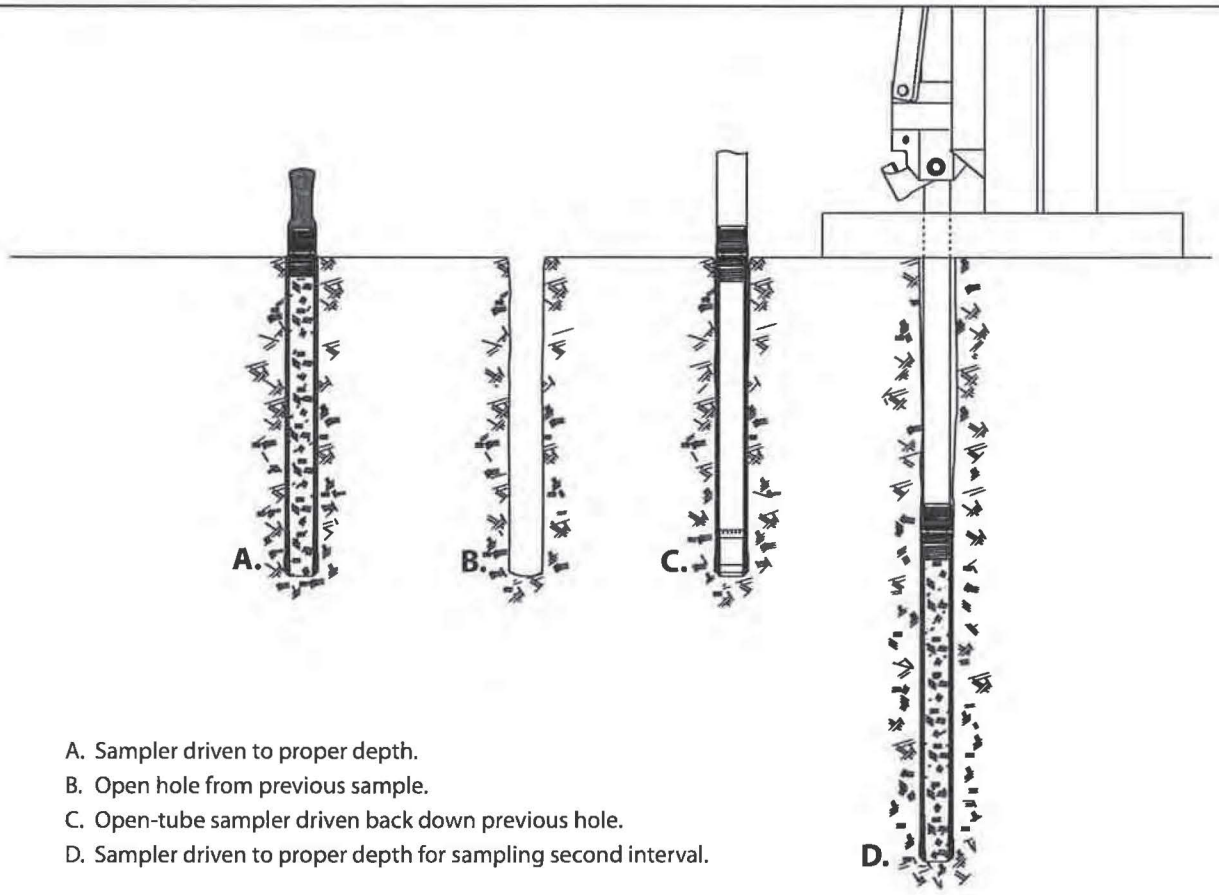


A. Sampler driven to proper depth.
B. Open hole from previous sample.
C. Open-tube sampler driven back down previous hole.
D. Sampler driven to proper depth for sampling second interval.

**Figure 4.27**
**Phases of MC5 Open-Tube Soil Sampling**

## 4.8 Closed-Point Sampling with the MC5 Center Rod System

Material collapsing from the probe hole sidewall can make it difficult to collect representative soil cores from significant depths with an open-tube sampler. To overcome this problem, the MC5 Sampler can be equipped with a center rod assembly that will hold the piston point in place. This allows the sealed sampler to pass through the slough material and then it can be opened at the appropriate sampling interval.

Instructions for operating the MC5 Closed-Point Sampler are given in this section.

1. Place a drive cap onto the center rod and a drive cap onto the drive head of an assembled Closed-Point Sampler (Refer to Section 4.4 for sampler assembly).

2. Raise the probe unit hammer assembly to its highest position by fully extending the probe cylinder.

3. Position the MC5 Sampler directly under the hammer with the cutting shoe centered between the toes of the probe foot. The sampler should now be parallel to the probe derrick. Step back from the unit and visually check sampler alignment (Fig. 4.25).

4. Apply static weight and hammer percussion to advance the sampler until the drive head reaches the ground surface (Fig. 4.28A).

5. Add additional probe rods and 1.25-inch light-weight center rods to the tool string until the desired sampling interval is reached (Fig. 4.28B).

6. Once the sampling interval is reached, remove the center rod string (Fig. 4.28C).

7. Add an additional probe rod to the string and place a drive cap on the probe rod (Fig. 4.28D).

8. Advance the tool string to collect the soil core in the liner (Fig. 4.28E).

   **NOTE: Activate hammer percussion whenever collecting soil. Percussion helps shear the soil at the leading end of the sampler so that it moves into the sample tube for increased recovery.**

9. Lower the hammer assembly and hook the hammer latch over the pull cap. Raise the hammer assembly to pull the first probe rod out of the ground. Remove the rod and place the pull cap on the next rod of the tool string. Continue pulling probe rods until the MC5 Sampler is brought to the ground surface. If a winch is available, it can be used with a pull plate to retract the tool string. An RG Handle is another option to retract the tool string.

   **NOTE: Use caution when advancing or retrieving the sampler within an open hole. Low side friction may allow the sampler and probe rods to drop down the hole when released. To prevent equipment loss, hold onto the tool string with a pipe wrench when needed.**

10. Proceed to Section 4.9 for instructions on recovering the soil core from the MC5 Sampler.

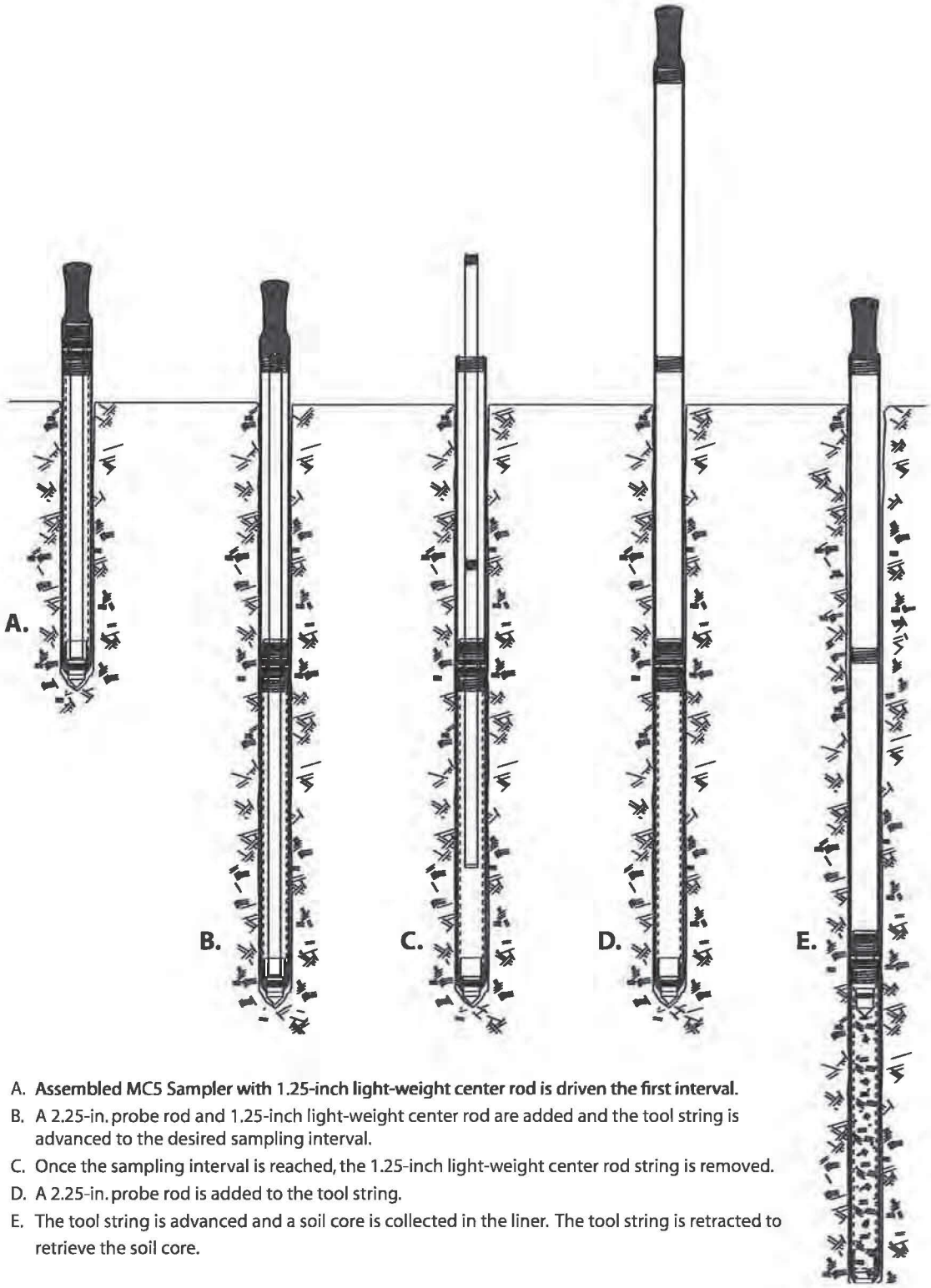


A. **Assembled MC5 Sampler with 1.25-inch light-weight center rod is driven the first interval.**
B. A 2.25-in. probe rod and 1.25-inch light-weight center rod are added and the tool string is advanced to the desired sampling interval.
C. Once the sampling interval is reached, the 1.25-inch light-weight center rod string is removed.
D. A 2.25-in. probe rod is added to the tool string.
E. The tool string is advanced and a soil core is collected in the liner. The tool string is retracted to retrieve the soil core.

**Figure 4.28**
**Phases of MC5 Closed-Point Center Rod System**

## 4.9 Soil Core Recovery

The soil sample is easily removed from the MC5 Sampler by unthreading the cutting shoe and pulling out the liner (Fig. 4.29). A few sharp taps on the cutting shoe with a pipe wrench will often loosen the threads sufficiently to allow removal by hand. If needed, the exterior of the cutting shoe features wrench flats for attaching a wrench to loosen tight threads. With the cutting shoe removed, simply pull the liner and soil core from the sample tube (Fig. 4.31). A Hydraulic Liner Extruder is also available for mounting on your machine to remove liners (Fig. 4.30).

If the closed-point sampler is used, the piston point is now retrieved from the end of the liner (Fig. 4.32). Secure the soil sampler by placing a vinyl end cap on each end of the liner.

Undisturbed soil samples can be obtained from liners by splitting the liner. The MC Liner (AT8010) is used to make longitudinal cuts along the liner (Fig. 4.33).

**Figure 4.29. Remove the MC5 Cutting Shoe and liner from the MC5 Sampler Tube.**

**Figure 4.30. The Hydraulic Liner Extruder helps remove the liner.**

**Figure 4.31. MC5 Liner filled with soil core.**

**Figure 4.32. MC5 Closed Piston Point is retrieved from the top of the liner.**

**Figure 4.33. MC Liner Cutter makes two longitudinal cuts in PVC Liners.**

## 4.10 Tips to Maximize Sampling Productivity

The following suggestions are based on the collective experiences of Geoprobe® operators:

1. Organize your truck or van. Assign storage areas to all tools and equipment for easy location. Transport sample tubes, probe rods, 1.25-inch light-weight center rods, and liners in racks. Above all, minimize the number of items lying loose in the back of your vehicle.

2. **Take three or four samplers to the field. This allows the collection of several samples before stopping to** clean and decontaminate the equipment. A system is sometimes used where one individual operates the probe while another marks the soil cores and decontaminates the used samplers.

3. A machine vise is recommended. With the sampler held in a vise, the operator has both hands free to remove the cutting shoe, drive head, and sample liner. Cleanup is also easier with both hands free. Geoprobe® offers an optional machine vise (FA300).

4. Organize your worksite. Practice with the sampler to identify a comfortable setup and then use the layout whenever sampling. A collapsible table or stand is handy to hold decontaminated sampler tubes and liners. Equipment may also be protected from contamination by placing it on a sheet of plastic on the ground.

   Instead of counting probe rods for each trip in-and-out of the probe hole, identify separate locations for **"new" rods and "used" rods. Collect the first sample from the open hole using "new" rods. As each probe rod** is removed during sampler retrieval, place it in the "used" rod location. Now advance a clean sampler back down the same hole using all of the rods from the "used" location. Add one "new" rod to the string and then drive the tools to collect the next soil core. Once again, remove each probe rod and place it in the "used" rod location as the sampler is retrieved. Repeat this cycle using all the "used" rods to reach the bottom of **the probe hole, and one "new" rod to fill the sampler.**

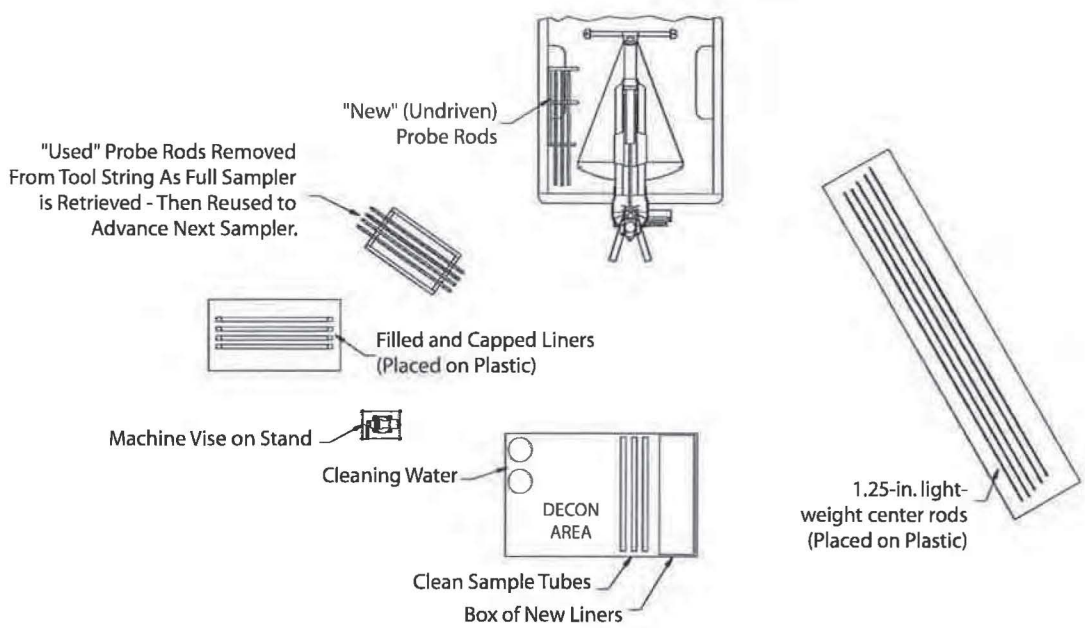


**Figure 4.36**
**Equipment Layout Example to Maximize Sampling Productivity**

5. Cleanup is very important from the standpoint of operation as well as decontamination. Remove all dirt and grit from the threads of the drive head, cutting shoe, and sample tube with a nylon brush (BU700). Without sufficient cleaning, the cutting shoe and drive head will not thread completely onto the sample tube and probe rods. The threads may be damaged if the sampler is driven in this condition.

   Ensure that all soil is removed from inside the sample tube. Sand particles are especially troublesome as they can bind liners in the sampler. Full liners are difficult to remove under such conditions. In extreme cases, the soil sample must be removed from the liner before it can be freed from the sample tube.

## 5.0 REFERENCES

Geoprobe Systems®, 2003. *Tools Catalog, V. 6.*

## APPENDIX A
## ALTERNATIVE PARTS

| Geoprobe® Tools and Equipment | Part Number |
|---|---|
| Drive Cap, GH40 Series, Threaded, 2.25 in. | 25362 |
| Drive Cap, GH60 Series, Threaded, 2.25 in. | 25363 |
| Drive Cap, GH60 Series, Threaded, 2.125 in. | 15673 |
| Nylon Brush, Macro-Core® Tool | BU700 |
| Nylon Brush, 2.25-in. and 2.125-in. probe rods | BU2125 |
| Extension Rod Handle | AT69 |
| Extension Rod (60-in.) | 10073 |
| Extension Rod (48-in.) | AT671 |
| Extension Rod (36-in.) | AT67 |

Equipment and tool specifications, including weights, dimensions, materials, and operating specifications included in this brochure are subject to change without notice. Where specifications are critical to your application, please consult Geoprobe Systems®.

Geoprobe Systems®

A DIVISION OF KEJR, INC.

Corporate Headquarters
1835 Wall Street • Salina, Kansas 67401
1-800-GEOPROBE (1-800-436-7762) • Fax (785) 825-2097
www.geoprobe.com

GET THE LATEST VERSION OF THIS DOCUMENT

Designation: D 6282 – 98 (Reapproved 2005)

# Standard Guide for Direct Push Soil Sampling for Environmental Site Characterizations[1]

This standard is issued under the fixed designation D 6282; the number immediately following the designation indicates the year of original adoption or, in the case of revision, the year of last revision. A number in parentheses indicates the year of last reapproval. A superscript epsilon (ϵ) indicates an editorial change since the last revision or reapproval.

## 1. Scope

1.1 This guide addresses direct push soil samplers, which also may be driven into the ground from the surface or through prebored holes. The samplers can be continuous or discrete interval units. Samplers are advanced by a combination of static push, or impacts from hammers, or vibratory methods, or a combination thereof, to the depth of interest. The guide does not cover open chambered samplers operated by hand such as augers, agricultural samplers operated at shallow depths, or side wall samplers. This guide does not address single sampling events in the immediate base of the drill hole using rotary drilling equipment with incremental drill hole excavation. Other sampling standards, such as Test Methods D 1586 and D 1587 and Practice D 3550 apply to rotary drilling activities. This guide does not address advancement of sampler barrel systems with methods that employ cuttings removal as the sampler is advanced. Other drilling and sampling methods may apply for samples needed for engineering and construction applications.

1.2 Guidance on preservation and transport of samples, as given in Guide D 4220, may or may not apply. Samples for chemical analysis often must be subsampled and preserved for chemical analysis using special techniques. Practice D 3694 provides information on some of the special techniques required. Additional information on environmental sample preservation and transportation is available in other references **(1, 2)**.[2] Samples for classification may be preserved using procedures similar to Class A. In most cases, a direct push sample is considered as Class B in Practice D 4220 but is protected, representative, and suitable for chemical analysis. The samples taken with this practice do not usually produce Class C and D (with exception of thin wall samples of standard size) samples for testing for engineering properties, such as shear strength and compressibility. Guide D 4700 has some information on mechanical soil sampling devices similar to direct push techniques, however, it does not address most direct push sampling methods. If sampling is for chemical evaluation in the Vadose Zone, consult Guide D 4700 for any special considerations.

1.3 Field methods described in this guide, include the use of discreet and continuous sampling tools, split and solid barrel samplers and thin walled tubes with or without fixed piston style apparatus.

1.4 Insertion methods described include static push, impact, percussion, other vibratory/sonic driving, and combinations of these methods using direct push equipment adapted to drilling rigs, cone penetrometer units, and specially designed percussion/direct push combination machines. Hammers providing the force for insertion include drop style, hydraulically activated, air activated and mechanical lift devices.

1.5 Direct push soil sampling is limited to soils and unconsolidated materials that can be penetrated with the available equipment. The ability to penetrate strata is based on hammer energy, carrying vehicle weight, compactness of soil, and consistency of soil. Penetration may be limited or damage to samplers and conveying devices can occur in certain subsurface conditions, some of which are discussed in 5.5. Successful sample recovery also may be limited by the ability to retrieve tools from the borehole. Sufficient retract force must be available when attempting difficult or deep investigations.

1.6 This guide does not address the installation of any temporary or permanent soil, ground water, vapor monitoring, or remediation devices.

1.7 The practicing of direct push techniques may be controlled by local regulations governing subsurface penetration. Certification, or licensing requirements, or both, may need to be considered in establishing criteria for field activities.

1.8 The values stated in SI units are to be regarded as standard: however, dimensions used in the drilling industry are given in inch-pound units by convention. Inch-pound units are used where necessary in this guide.

1.9 *This standard does not purport to address all of the safety concerns, if any, associated with its use. It is the responsibility of the user of this standard to establish appropriate safety and health practices and determine the applicability of regulatory limitations prior to use.*

[1] This guide is under the jurisdiction of ASTM Committee D18 on Soil and Rock and is the direct responsibility of Subcommittee D18.21 on Ground Water and Vadose Zone Investigation.

Current edition approved Jan. 1, 2005. Published February 2005. Originally approved in 1998. Last previous edition approved in 1998 as D 6282–98.

[2] The boldface numbers in parentheses refer to the list of references at the end of this standard.

Copyright © ASTM International, 100 Barr Harbor Drive, PO Box C700, West Conshohocken, PA 19428-2959, United States.

1.10 *This guide offers an organized collection of information or a series of options and does not recommend a specific course of action. This document cannot replace education or experience and should be used in conjunction with professional judgment. Not all aspects of this guide may be applicable in all circumstances. This ASTM standard is not intended to represent or replace the standard of care by which the adequacy of a given professional service must be judged, nor should this document be applied without consideration of a projects's many unique aspects. The word "Standard" in the title of this document means only that the document has been approved through the ASTM consensus process.*

## 2. Referenced Documents

2.1 *ASTM Standards:* [3]

D 653 Terminology Relating to Soil, Rock and Contained Fluids

D 1586 Test Method for Penetration Test and Split-Barrel Sampling of Soils

D 1587 Practice for Thin-Wall Tube Sampling of Soils

D 2488 Practice for Description and Identification of Soils (Visual-Manual Method)

D 3550 Practice for Ring-Lined Barrel Sampling of Soils

D 3694 Practices for Preparation of Sample Containers and for Preservation of Organic Constituents

D 4220 Practices for Preserving and Transporting Soil Samples

D 4700 Guide for Soil Sampling from the Vadose Zone

D 5088 Practice for Decontamination of Field Equipment Used at Nonradioactive Waste Sites

D 5092 Practice for Design and Installation of Ground Water Monitoring Wells in Acquifers

D 5299 Guide for Decommisioning of Ground Water Wells, Vadose Zone Monitoring Devices, Boreholes, and Other Devices for Environmental Activities

D 5434 Guide for Field Logging of Subsurface Explorations of Soil and Rock

D 6001 Guide for Direct-Push Water Sampling for Geoenvironmental Investigations

## 3. Terminology

3.1 *Definitions*—General definitions for terminology used in this guide are in accordance with Terminology D 653. Definitions for terms related to direct push water sampling for geoenvironmental investigations are in accordance with Guide D 6001.

3.1.1 *assembly length*, *n*—length of sampler body and riser pipes.

3.1.2 *borehole*, *n*—a hole of circular cross-section made in soil or rock.

3.1.3 *casing*, *n*—pipe furnished in sections with either threaded connections or bevelled edges to be field-welded, which is installed temporarily or permanently to counteract caving, to advance the borehole, or to isolate the interval being monitored, or combination thereof.

3.1.4 *caving/sloughing*, *n*—the inflow of unconsolidated material into an unsupported borehole that occurs when the borehole walls lose their cohesive strength.

3.1.5 *decontamination*, *n*—the process of removing undesirable physical or chemical constituents, or both, from equipment to reduce the potential for cross-contamination.

3.1.6 *direct push sampling*, *n*—sampling devices that are advanced into the soil to be sampled without drilling or borehole excavation.

3.1.7 *extension rod*, *n*—hollow steel rod, threaded, in various lengths, used to advance and remove samplers and other devices during direct pushing boring. Also known as *drive rod*. In some applications, small diameter solid extension rods are used through hollow drive rods to activate closed samples at depth.

3.1.8 *incremental drilling and sampling*, *n*—insertion method where rotary drilling and sampling events are alternated for incremental sampling. Incremental drilling often is needed to penetrate harder or deeper formations.

3.1.9 *percussion driving*, *n*—insertion method where rapid hammer impacts are performed to advance the sampling device. The percussion normally is accompanied with the application of a static down-force.

3.1.10 *push depth*, *n*—the depth below a ground surface datum to which the lower end, or tip, of the direct-push sampling device is inserted.

3.1.11 *sample interval*, *n*—defined zone within a subsurface strata from which a sample is gathered.

3.1.12 *sample recovery*, *n*—the length of material recovered divided by the length of sampler advancement and stated as a percentage.

3.1.13 *soil core*, *n*—cylindrical shaped specimen of sediments or other unconsolidated accumulations of solid particles produced by the physical and chemical disintegration of rocks and which may or may not contain organic matter recovered from a soil sampler.

3.2 *Definitions of Terms Specific to This Standard:*

3.2.1 *closed barrel sampler*, *n*—a sampling device with a piston or other secured device that is held to block the movement of material into the barrel until the blocking device is removed or released. Liners are required in closed barrel samplers. Also may be referred to as a *protected type sampler.*

3.2.2 *impact heads/drive heads*, *n*—pieces or assemblies that fit to top of the above ground portion of the direct push tool assembly to receive the impact of the hammering device and transfer the impact energy to sampler extensions.

3.2.3 *open barrel sampler*, *n*—sampling barrel with open end allowing material to enter at any time or depth. Also may be referred to as an *unprotected type sampler.*

3.2.4 *piston lock*, *n*—device to lock the sampler piston in place to prevent any entry of a foreign substance into the sampler chamber prior to sampling.

3.2.5 *single tube system*, *n*—a system whereby single extension/drive rods with samplers attached are advanced into the subsurface strata to collect a soil sample.

[3] For referenced ASTM standards, visit the ASTM website, www.astm.org, or contact ASTM Customer Service at service@astm.org. For *Annual Book of ASTM Standards* volume information, refer to the standard's Document Summary page on the ASTM website.

3.2.6 *solid barrel sampler*, *n*—a soil sampling device consisting of a continuous or segmented tube with a wall thickness sufficient to withstand the forces necessary to penetrate the strata desired and gather a sample. A cutting shoe and a connecting head are attached to the barrel.

3.2.7 *split barrel sampler*, *n*—a soil sampling device consisting of the two half circle tubes manufactured to matching alignment, held together on one end by a shoe and on the other by a connecting head.

3.2.8 *two tube systems*, *n*—a system whereby inner and outer tubes are advanced simultaneously into the subsurface strata to collect a soil sample. The outer tube is used for borehole stabilization. The inner tube for sampler recovery and insertion.

## 4. Summary of Guide

4.1 Direct push soil sampling consists of advancing a sampling device into subsurface soils by applying static pressure, by applying impacts, or by applying vibration, or any combination thereof, to the above ground portion of the sampler extensions until the sampler has been advanced to the desired sampling depth. The sampler is recovered from the borehole and the sample removed from the sampler. The sampler is cleaned and the procedure repeated for the next desired sampling interval. Sampling can be continuous for full depth borehole logging or incremental for specific interval sampling. Samplers used can be protected type for controlled specimen gathering or unprotected for general soil specimen collection.

## 5. Significance and Use

5.1 Direct push methods of soil sampling are used for geologic investigations, soil chemical composition studies, and water quality investigations. Examples of a few types of investigations in which direct push sampling may be used include site assessments, underground storage tank investigations, and hazardous waste site investigations. Continuous sampling is used to provide a lithological detail of the subsurface strata and to gather samples for classification and index or for chemical testing. These investigations frequently are required in the characterization of hazardous waste sites. Samples, gathered by direct push methods, provide specimens necessary to determine the chemical composition of soils, and in most circumstances, contained pore fluids **(3)**.

5.2 Direct push methods can provide accurate information on the characteristics of the soils encountered and of the chemical composition if provisions are made to ensure that discrete samples are collected, that sample recovery is maximized, and that clean decontaminated tools are used in the sample gathering procedure. For purposes of this guide, "soil" shall be defined in accordance with Terminology D 653. Using sealed or protected sampling tools, cased boreholes, and proper advancement techniques can assure good representative samples. Direct push boreholes may be considered as a supplementary part of the overall site investigation or may be used for the full site investigation if site conditions permit. As such, they should be directed by the same procedural review and quality assurance standards that apply to other types of subsurface borings. A general knowledge of subsurface conditions at the site is beneficial.

5.3 Soil strata profiling to shallow depths may be accomplished over large areas in less time than with conventional drilling methods because of the rapid sample gathering potential of the direct push method. More site time is available for actual productive investigation as the time required for ancillary activities, such as decontamination, rig setup, tool handling, borehole backfill, and site clean-up is reduced over conventional drilling techniques. Direct push soil sampling has benefits of smaller size tooling, smaller diameter boreholes, and minimal investigative derived waste.

5.4 The direct push soil sampling method may be used as a site characterization tool for subsurface investigation and for remedial investigation and corrective action. The initial direct push investigation program can provide good soil stratigraphic information depending on the soil density and particle size, determine ground water depth, and provide samples for field screening and for formal laboratory analysis to determine the chemical composition of soil and contained pore fluids. Use of this method, results in minimum site disturbance and no cuttings are generated.

5.5 This guide may not be the correct method for investigations in all cases. As with all drilling methods, subsurface conditions affect the performance of the sample gathering equipment and methods used. Direct push methods are not effective for solid rock and are marginally effective in partially weathered rock or very dense soils. These methods can be utilized to determine the rock surface depth. The presence or absence of ground water can affect the performance of the sampling tools. Compact gravelly tills containing boulders and cobbles, stiff clay, compacted gravel, and cemented soil may cause refusal to penetration. Certain cohesive soils, depending on their water content, can create friction on the sampling tools which can exceed the static delivery force, or the impact energy applied, or both, resulting in penetration refusal. Some or all of these conditions may complicate removal of the sampling tools from the borehole as well. Sufficient retract force should be available to ensure tool recovery. As with all borehole advancement methods, precautions must be taken to prevent cross contamination of aquifers through migration of contaminants up or down the borehole. Regardless of the tool size, the moving of drilling and sampling tools through contaminated strata carries risks. Minimization of this risk should be a controlling factor in selecting sampling methods and drilling procedures. The user should take into account the possible chemical reaction between the sample and the sampling tool itself, sample liners, or other items that may come into contact with the sample **(3, 4)**.

5.6 In some cases this guide may combine water sampling, or vapor sampling, or both, with soil sampling in the same investigation. Guides D 6001 and D 4700 can provide additional information on procedures to be used in such combined efforts.

## 6. Criteria for Selection

6.1 Important criteria to consider when selecting sampling tools include the following:

6.1.1 Size of sample.

6.1.2 Sample quality (Class A,B,C,D) for physical testing. Refer to Practice D 4220.

6.1.3 Sample handling requirements, such as containers, preservation requirements.

6.1.4 Soil conditions anticipated.

6.1.5 Ground water depth anticipated.

6.1.6 Boring depth required.

6.1.7 Chemical composition of soil and contained pore fluids.

6.1.8 Probability of cross contamination.

6.1.9 Available funds.

6.1.10 Estimated cost.

6.1.11 Time constraints.

6.1.12 History of tool performance under anticipated conditions (consult experienced users and manufacturers).

6.2 Important criteria to consider when selecting direct push equipment include the following:

6.2.1 Site accessibility.

6.2.2 Site visibility.

6.2.3 Soil conditions anticipated.

6.2.4 Boring depth required.

6.2.5 Borehole sealing requirements.

6.2.6 Equipment performance history.

6.2.7 Personnel requirements.

6.2.8 Decontamination requirements.

6.2.9 Equipment grouting capability.

6.2.10 Local regulatory requirements.

## 7. Apparatus

7.1 *General*—A direct push soil sampling system consists of a sample collection tool, hollow extension rods for advancement, retrieval, and transmission of energy to the sampler, and an energy source to force sampler penetration. Auxiliary tools are required to handle, assemble and disassemble, clean, and repair the sample collection tools and impact surfaces. Necessary expendable supplies are sample containers, sample container caps, sample liners, sample retainers, appropriate lubricants, and personal safety gear.

7.2 *Direct Push Tool Systems*:

7.2.1 *Two Tube System*—An outer casing and an inner extension rod with a sampler attached (see Fig. 1) are advanced simultaneously into the soil for the length capacity of the sampler. The sampler is removed from the borehole and a new sampler barrel or plug bit is inserted for each increment of depth. Two-tube sampling systems also may incorporate sample gathering chambers that are fitted into the outer casing shoe. These sample barrels are designed to create a minimum of sample disturbance while gathering high quality specimens (see Fig. 2). Samplers are held in the proper position by different methods, such as extension rods, pneumatic or mechanical packers, spring activated latches, or other devices (see Figs. 1 and 2). Locking devices must be strong enough to hold the sampler while penetrating the sample strata. The outer casing supports the borehole wall. Sample retrieval is expedited by the cased hole and continuous sampling is simplified. Continuous sampling may be a benefit to lithological logging. A cased borehole can be sealed from the bottom up as the casing is extracted (see Section 10). A cased hole may reduce the risk of contamination migration down the borehole and sample cross contamination. The two-tube system is more susceptible to soil friction because of its larger diameter and may require larger direct push energy than single-tube systems. An oversized drive shoe is sometimes used to reduce friction and buckling but may increase the risk of contamination migration down the borehole.

7.2.2 *Single Tube System*—The single tube system (see Fig. 3), uses a hollow extension/drive rod to advance and retrieve the sampler. The sampler is attached to the bottom of the extension/drive rod. A drive cap is added to the top of the extension/drive rod and the sampler is pushed into the soil. Extension/drive rods generally are smaller in diameter than the sampler. The single tube system minimizes effort for discrete interval sampling under many subsurface conditions. Tool connection time per interval is reduced. Time of removal and reinsertion of samplers into the borehole is affected by soil conditions. Repeated movement of the sampler through contaminated subsurface strata may increase the risk of contamination migration down the borehole. Bottom up borehole sealing may require re-entry in soil formations that collapse (see Section 10).

7.3 *Samplers*:

7.3.1 *Split Barrel Samplers*—Split barrel samplers (see Fig. 4) are available for use with direct push drilling methods and are available in various sizes up to 3.0 in. (76.2-mm) inside diameter. The inside tolerance should allow for use of liners. Split barrel sampler shoes used in two tube systems must be of sufficient diameter to prevent the intrusion of soil between the outer diameter of the shoe and the inside wall of the outer tube. Split barrel shoes should be replaced when the leading edge is damaged. Damaged shoes can negatively affect sample recovery. Samplers can be used with or without ball check value fitted split barrel heads. The ball check prevents uphole fluids from flowing down through the sample. Where soil sampling will be performed below the water table, the split barrel head, equipped with a ball check, should be used. The open split barrel is best used with the two tube system because the outer casing protects the borehole against cave-in or sloughing, or in soils in which the borehole wall will not collapse. Split barrel sealing systems are available. Split barrel sections can be joined to create a sampler with a nominal sample length capacity of 48 in. (1.22 m). It is understood that samplers with usable lengths beyond 24 in. (0.61 m) are used to advantage in certain soil types; however, the added weight of the soil sample in the chamber and the added friction within the sampler may prevent loose soils from entering the sampler, affecting sample recovery and representativeness. Split barrel samplers can be fitted with a basket to improve recovery in cohesionless soils. Retainers are available in many styles and materials. Retainers should allow the passage of softer soils. Stiff retainers can reduce specimen recovery in soft soils.

7.3.2 *Solid Barrel Samplers*:

7.3.2.1 *Open Solid Barrel Samplers*—Open solid barrel (see Fig. 5) samplers are used with all types of direct push sampling systems. Solid barrels can have inside diameters ranging up to 3 in. (76.2 mm). Barrel lengths range from 6 in. (152.4 mm) to 5 ft (1.53 m). Solid barrel samplers may be one piece or segmented. Sample liners should be used to facilitate removal

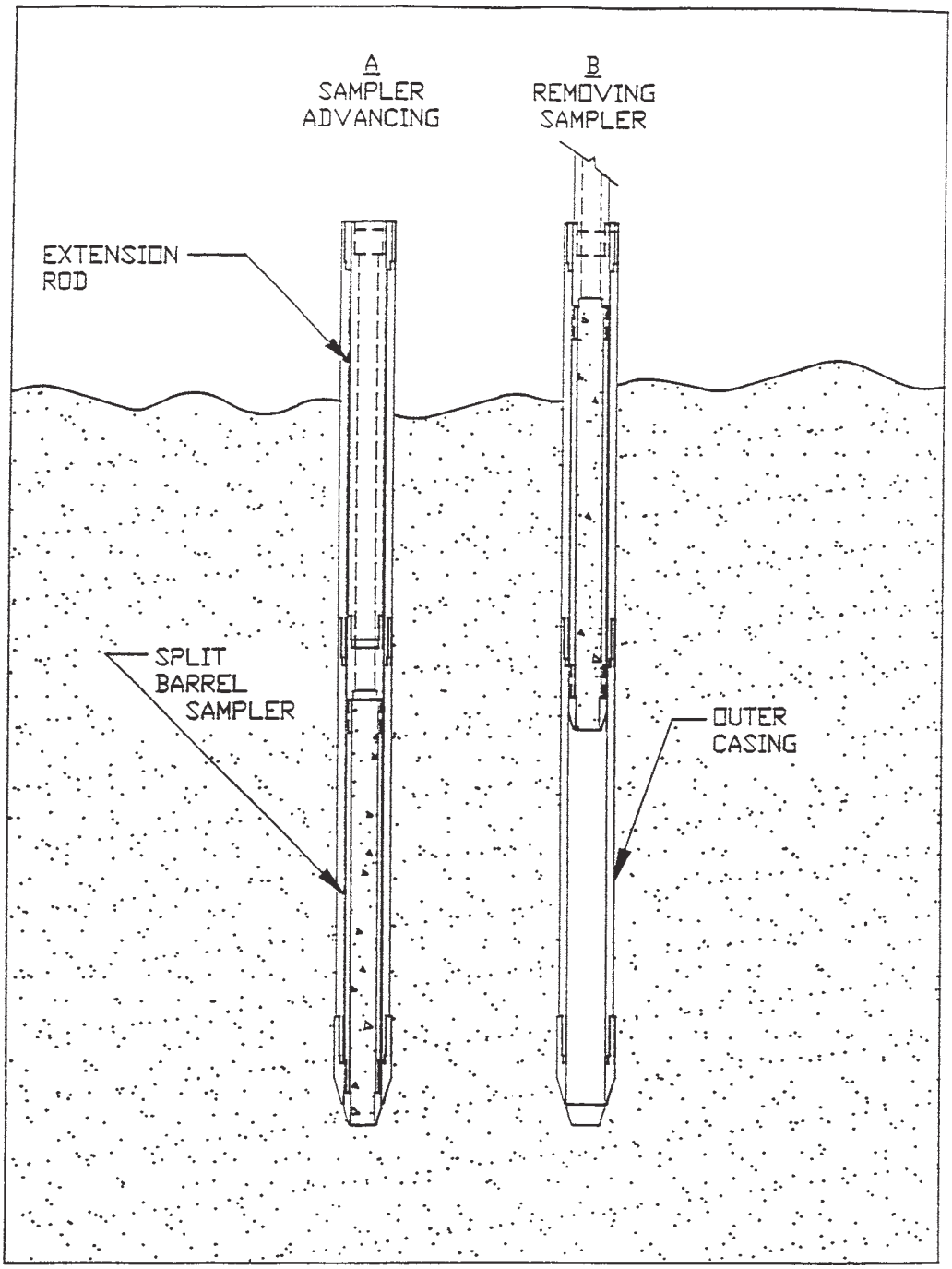


**FIG. 1 Split Spoon Sampling, Two Tube System**

of the sample from the solid barrel. Without the use of liners, samples are extruded mechanically. Liner lengths should fit sampler barrel lengths. Solid barrel samplers are generally assembled with a removable cutting shoe and a drive head (see Fig. 6). The head provides a backing to hold the liner stationary while the sampler is advanced and serves as a connector to the extension/drive rods. The shoe is manufactured to hold the liner stationary during the soil collection procedure. The liner should be slightly larger than the inner diameter of the cutting shoe. It may be slipped over the cutting shoe (see Fig. 6) or nested inside of the cutting shoe (see Fig. 7). The shoe is manufactured to cut the sample to a slightly undersized diameter allowing it to pass into the sample liner with a minimum of side friction to reduce sample disturbance. The amount of specimen contact with the inside of the shoe should be held to the minimum distance possible to aid in achieving the maximum amount of recovery.

7.3.3 *Closed Barrel Sampler*—Closed barrel samplers (see Figs. 2 and 3, Figs. 5-8) are devices, which remain sealed shut until an action is taken to open the sample receiving chamber. These samplers are used most often for single events (discrete point sampling) where a sealed sampler is required to avoid

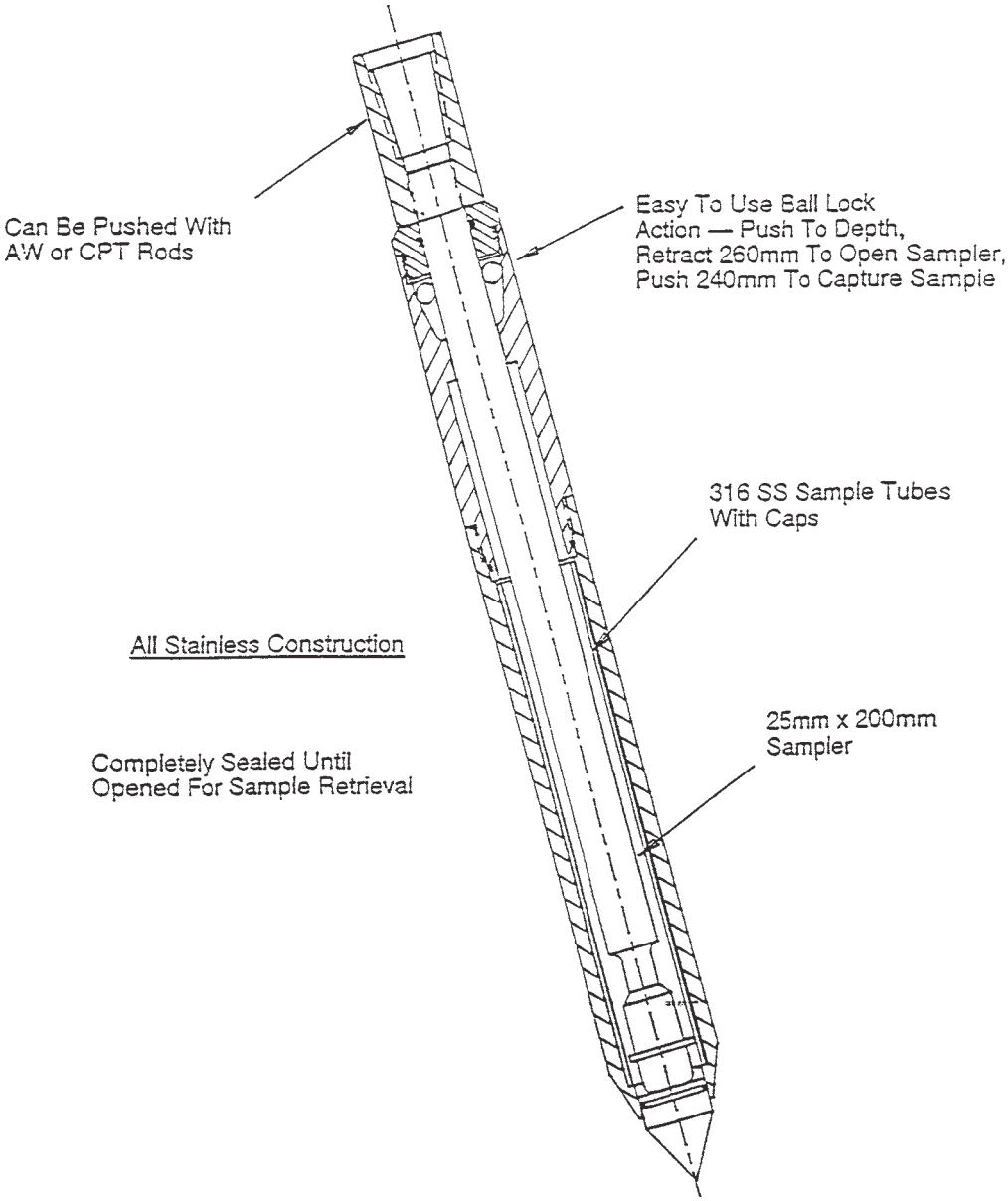


**FIG. 2 Sealed Sample Barrel, Single Tube System**

cross contamination or in circumstances where borehole wall stability cannot be assured. The shoe sealing device generally is a point designed to allow the continuous flow of soil around and past the sampler until such time as it is removed or released. The piston point can be fitted with seals, such as "O" rings at top and bottom to hold fluid out until sampling the desired interval. The piston rod extends through the sample retaining liner and must be released or removed for the soil to enter (see Fig. 3, Fig. 5, Fig. 7). The piston can be removed manually before sampling or be displaced by the soil entering the sampler chamber. Using the displacement method can result in reduced recovery if sampled soils do not have sufficient strength to displace the piston. Pistons are locked in place by several methods, such as a spring loaded latch. The latch holds several balls (see Fig. 2, Fig. 7, Fig. 8) into a groove in the latch coupling. When the latch is released by lifting up on the latch stem, the balls slip back into the latch chamber allowing the piston to be removed. Another method uses a locking screw. A reverse thread pin (Fig. 3, Fig. 6) is positioned in the sampler head to prevent the piston from being displaced by the soil when advancing the sampler. At the sampling interval, small diameter extension rods are inserted through the sampler extension/drive rods and rotated clockwise to unscrew the locking pin. A third method uses an inflated packer. An inflated packer (see Fig. 9) is attached to the top of the sampler barrel. The sample barrel is lowered into position in the drive casing and the packer inflated. The packer is deflated to release and the sample barrel is recovered after being advanced the sampling interval.

7.3.4 *Thin Wall Tube*—A 1.0-in. (25.4-mm) diameter thin wall tube (see Fig. 10) is available for use with direct push equipment and is manufactured according to Practice D 1587. Thin wall tubes can be effective when used with dual tube direct push systems as the borehole must be kept clear of

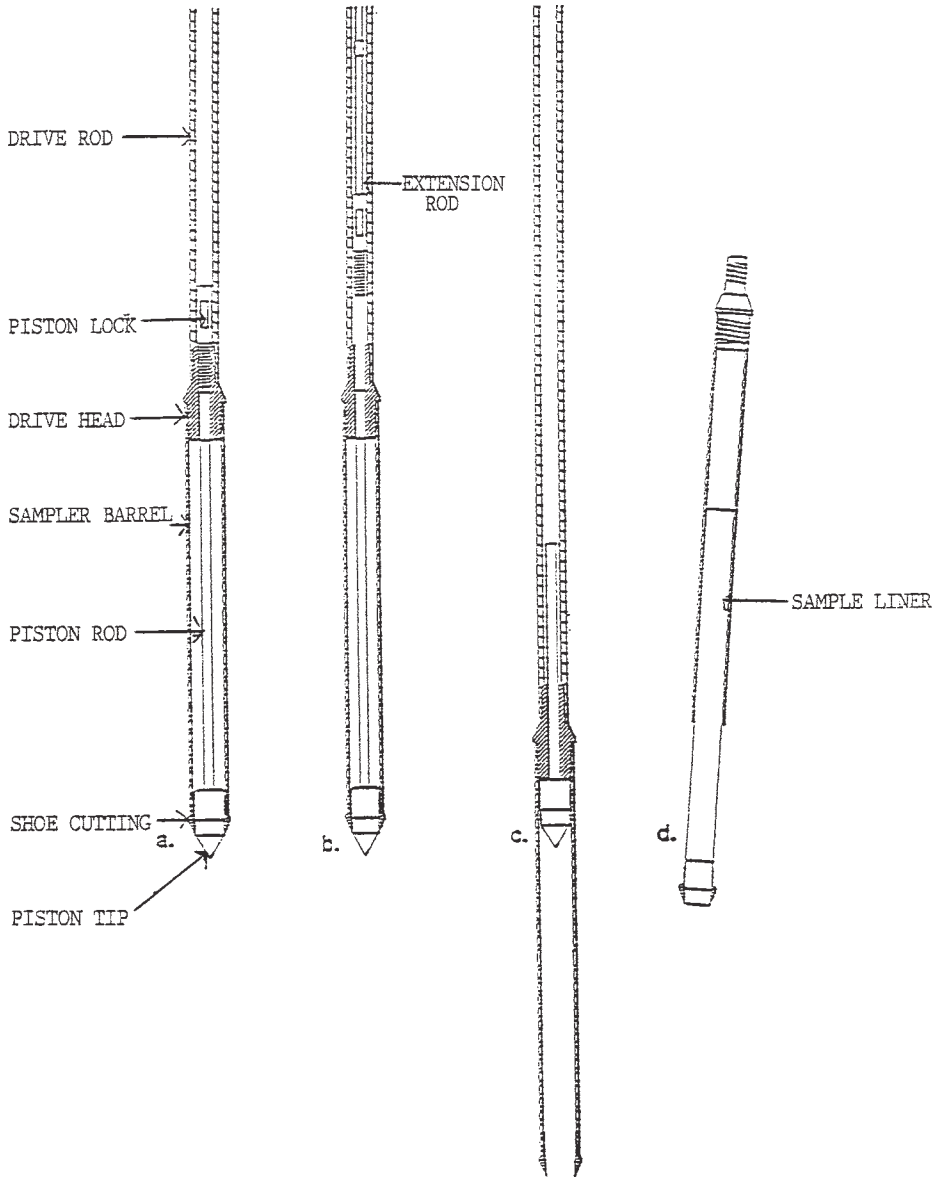


**FIG. 3 Driving and Sampling, Single Tube System**

(a) Driving the sealed sampler. (b) Removing the stop-pin.
(c) Collecting a sample (d) Recovering sample in liner.

disturbed soil prior to gathering a sample. Thin wall tubes may be effective in cohesive soils with single tube systems when the borehole can be kept clear of disturbed soil. Thin wall tubes must have an outside diameter that will allow passage through the outer casing. The thin wall tube can be operated in accordance with Practice D 1587, or it can be advanced using the percussion hammer of the direct push equipment. The primary use of the thin wall tube is to gather relatively undisturbed samples in cohesive soils. Sealing of thin wall tube ends should be completed in accordance with Practice D 4220. Fixed piston apparatus (see Fig. 10) also is available for use with thin walled tubes. The fixed piston action allows the sampling of very soft formations, which may not be retained in conventional samplers. In certain soil formations, the thin wall tube provides the best method to collect an undisturbed sample.

7.3.5 *Sampler Extension/Drive Rods*—Sampler extension/drive rods are lengths of rod or tube generally constructed of steel to withstand the pushing or percussion forces applied. Extension drive rods are available in various lengths. Rod lengths should be mated with casing and sampling equipment used. Thread types and classes vary between equipment manufacturers. Rod joints can be sealed to prevent fluid intrusion with "O" rings. Teflon™ washers or Teflon™ tape. Because of the percussive effort, joint seals should be checked for each sampling effort. Extension/drive rods should have sufficient inside diameter to accommodate the equipment necessary to perform the desired action.

7.3.6 *Sampler Liners*—Sampler liners are used to collect and store samples for shipment to laboratories, for field index testing of samples and for removing samples from solid barrel

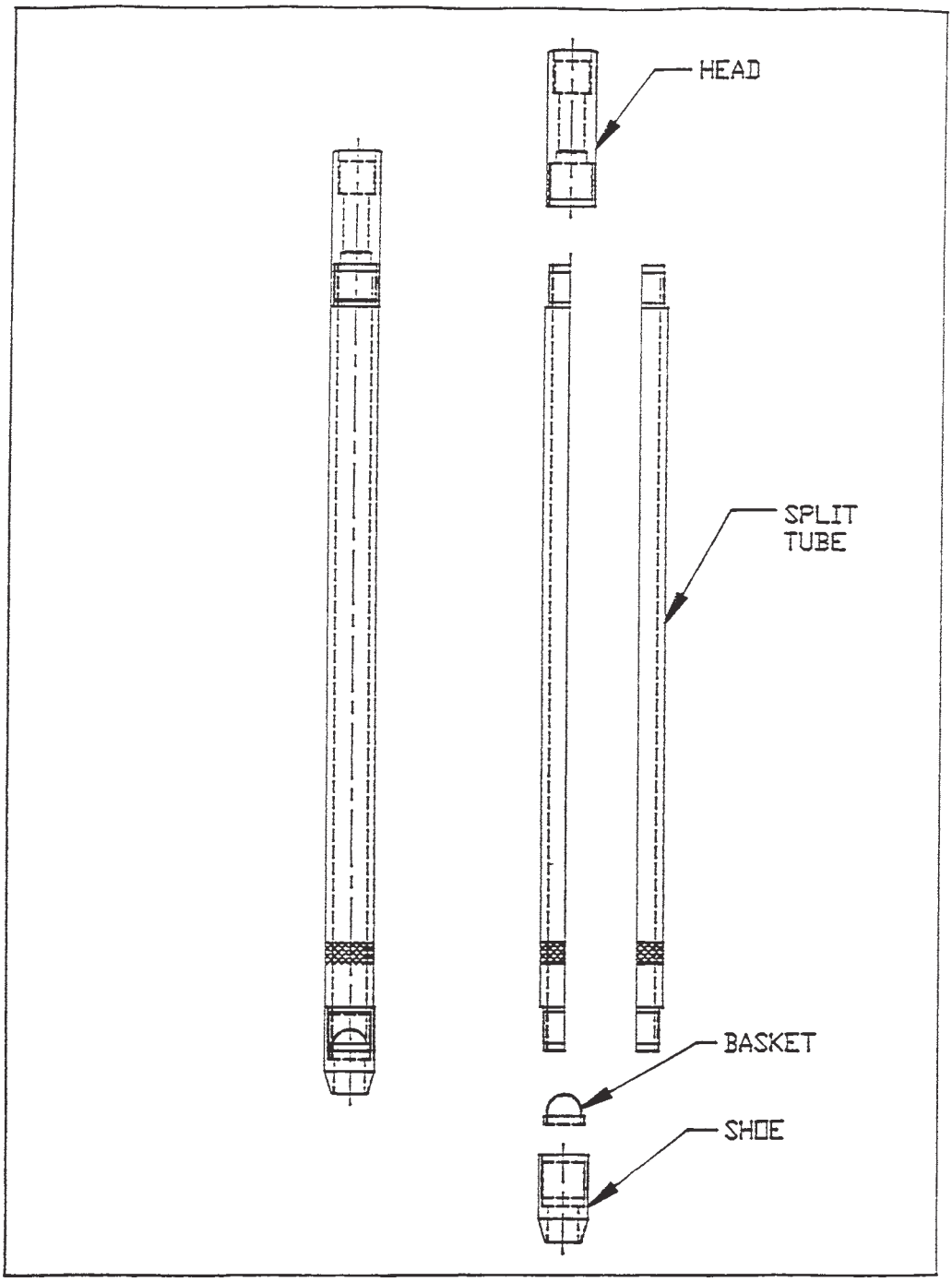


**FIG. 4 Split Barrel Sampler, Two Tube System**

type samplers. Liners are available in plastics, Teflon™, brass, and stainless steel. Other materials can be used as testing needs dictate. Liners are available in lengths from 6 in. (152.4 mm) to 5.0 ft (1.53 m). Liner material selection often is based on the chemical composition of liner/soil to minimize sample reaction with liner. Most liner use is short term as samples are subsampled and preserved immediately on site. A general rule for liner selection is stainless steel for organic compounds and plastic for metals. Teflon™ may be required for mixed wastes and for long time storage. Liners should be sealed in accordance with Practice D 4220 when samples are collected for physical testing. Other appropriate procedures must be used when samples are collected for environmental analysis (see Practices D 3694) **(1, 2)**. Liners generally are split in the field for subsampling. Individually split liners are available in some sizes for field use. The liner should have a slightly larger inside diameter than the soil specimen to reduce soil friction and enhance recovery. When a slightly oversized liner is used, the potential for air space exists around the sample. Certain chemical samples may be affected by the enclosed air. Liners having less tolerance may be required and a shortened sampled interval used to reduce friction in the liner. Metal liners can be

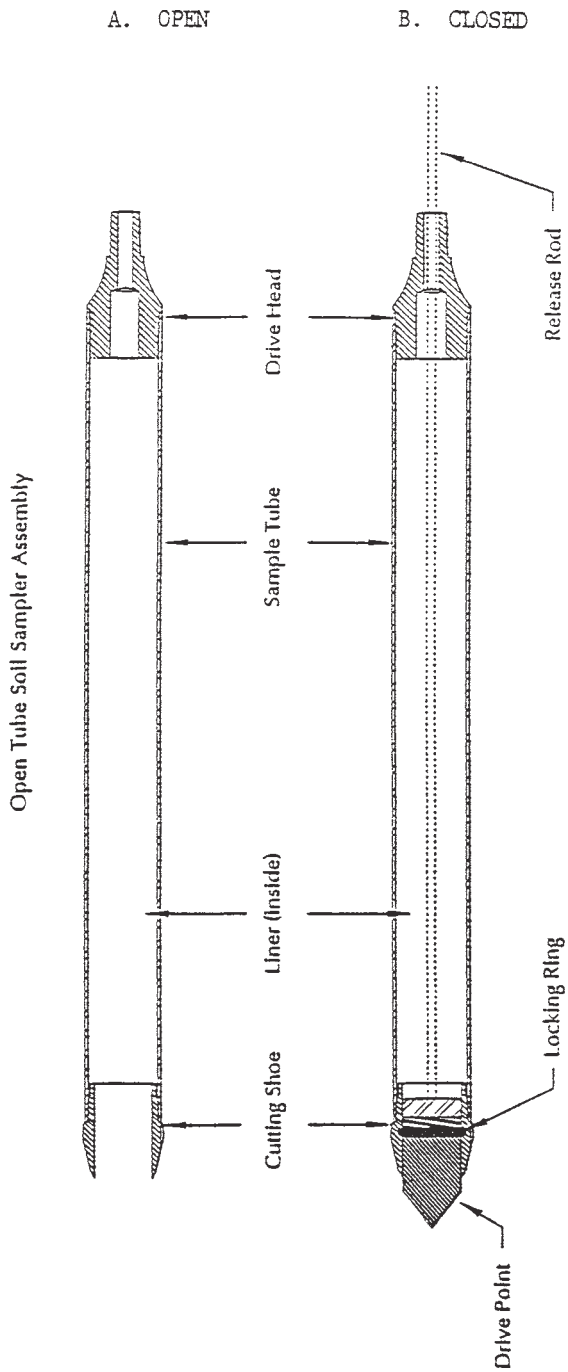


**FIG. 5 (A) Open and (B) Closed Piston Sampler Assembly, Single Tube System**

reused after proper cleaning and decontamination. Plastic liners should be disposed of properly after use.

7.3.7 *Sample Containers*—Sample containers should be prescribed according to the anticipated use of the sample specimen. Samples taken for chemical testing may require decontaminated containers with specific preservatives. Practice D 3694 provides information on some of the special containers and preservation techniques required **(1, 2)**. These containers generally will be decontaminated to specific criteria. Samples for geotechnical testing require certain minimum volumes and specific handling techniques. Practice D 4220 offers guidance for sample handling of samples submitted for physical testing.

7.4 *Direct Push Power Sources*—Soil probing percussion driving systems, penetrometer drive systems, and rotary drilling equipment may be used to drive casings and direct push soil sampling devices. The equipment should be capable of applying sufficient static force, or dynamic force, or both, to advance the sampler to the required depth to gather the desired sample. The system must have adequate retraction force to remove the sampler and extension/drive rods once the selected strata has been penetrated. Rotation of the drill string can be added during insertion, as well as during retraction if the drive system can impart rotation.

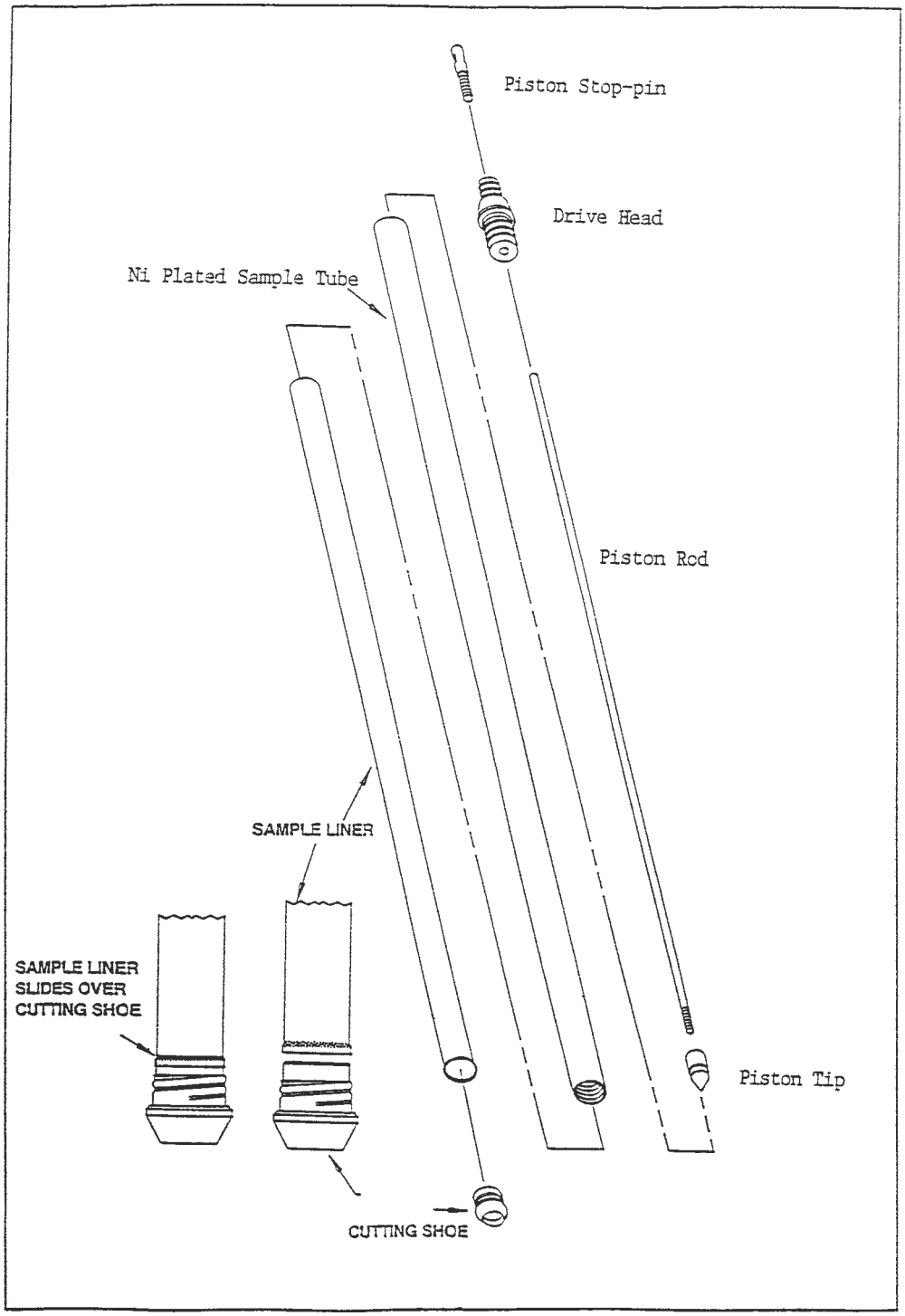


**FIG. 6 Sampler Parts, Single Tube System**

7.4.1 *Retraction Force*—The retraction force can be applied by direct mechanical pull back using the hydraulic system of the power source; line pull methods using mechanical or hydraulic powered winches, or cathead and rope windlass type devices. Winches used with direct push technology should have a minimum of 2000 lb (907 kg) top layer rating capacity and a line speed of 400 ft (121.96 m)/min to provide effective tool handling. Direct push sampling tools can be retracted by back pounding using weights similar to those of standard penetration testing practices. Backpounding to recover samples can affect recovery and cause disturbances to the sample. Other forms of extraction, such as jacking, that do not cause undue disturbance to the sample, are preferable.

7.4.2 *Percussion Devices*—Percussion devices for use with direct push methods are hydraulically-operated hammers, air-operated hammers, and mechanically-operated hammers. Hydraulically-operated hammers should have sufficient energy to be effective in moving the samplers through the subsurface

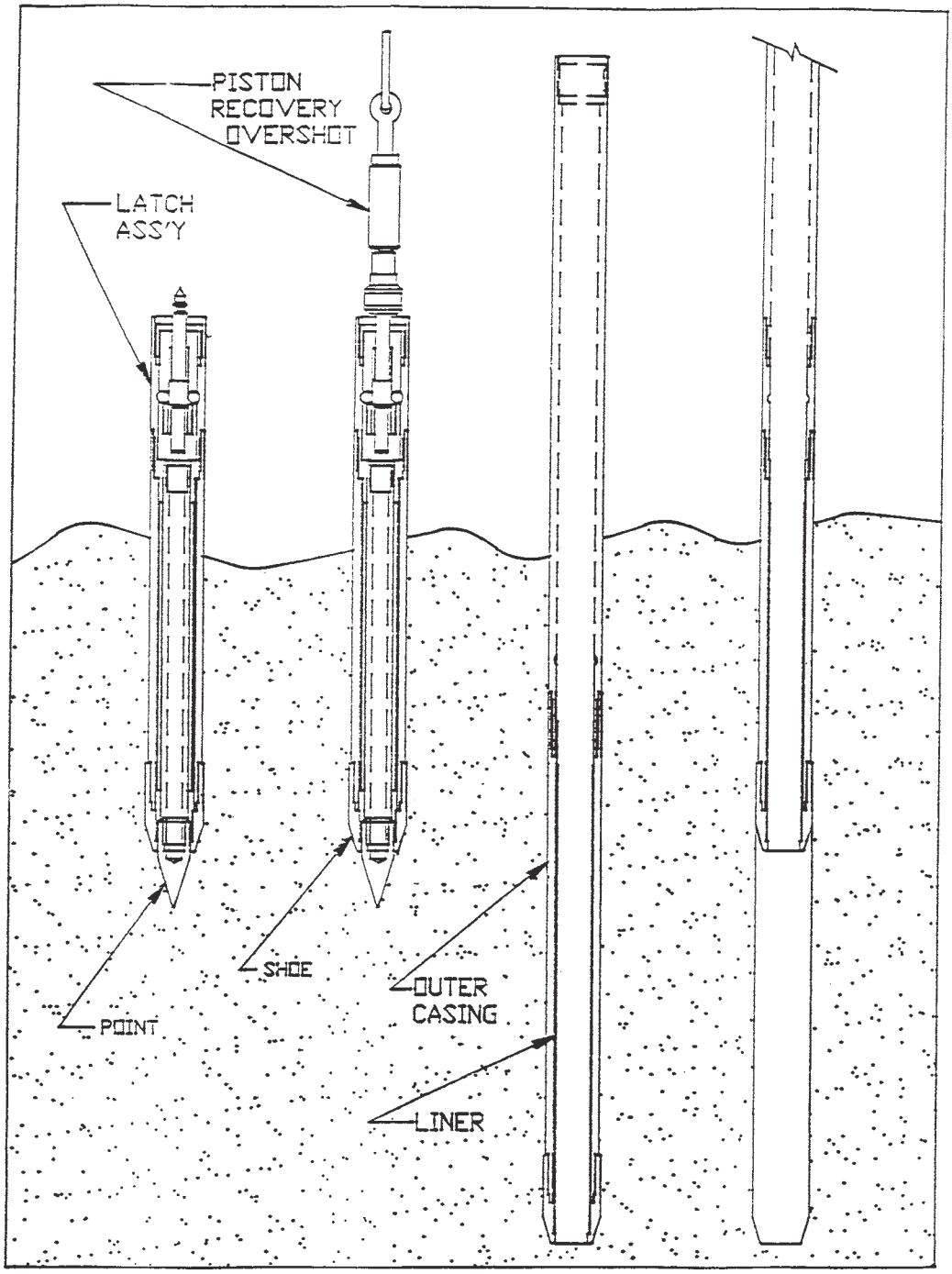


**FIG. 7 Closed Solid Barrel Sampler, Single Tube System**

strata. The maximum energy application is dependent on the tools used. Hammer energy that exceeds tool tolerance will result in tool damage or loss and will not achieve the goal of collecting high quality samples. Air-operated hammers should be capable of delivering sufficient energy, as well. Hammer systems utilizing hydraulic oil or air should be operated in the range specified by the manufacturer. Manually-operated hammers can be used to advance direct push tools. These hammers can be operated mechanically or manually using cathead and rope. These systems generally involve using 140 lb, standard penetration (see Test Method D 1586) hammers, which can work well for direct push sampling. In operation, these hammers tend to be slower than hydraulic hammers and can cause tool damage if direct push tools are not designed to take the heavy blows associated with these hammers. The hydraulic- and air-operated hammers strike up to 2000 blows/min. In addition to the energy transferred, the rapid hammer action sets up a vibratory effect, which also aids in penetration. This vibratory effect, along with the percussive effort, may disturb some soil samples.

7.4.3 *Static Push Systems*—Cone penetrometer systems are an example of static push systems. They impart energy to the

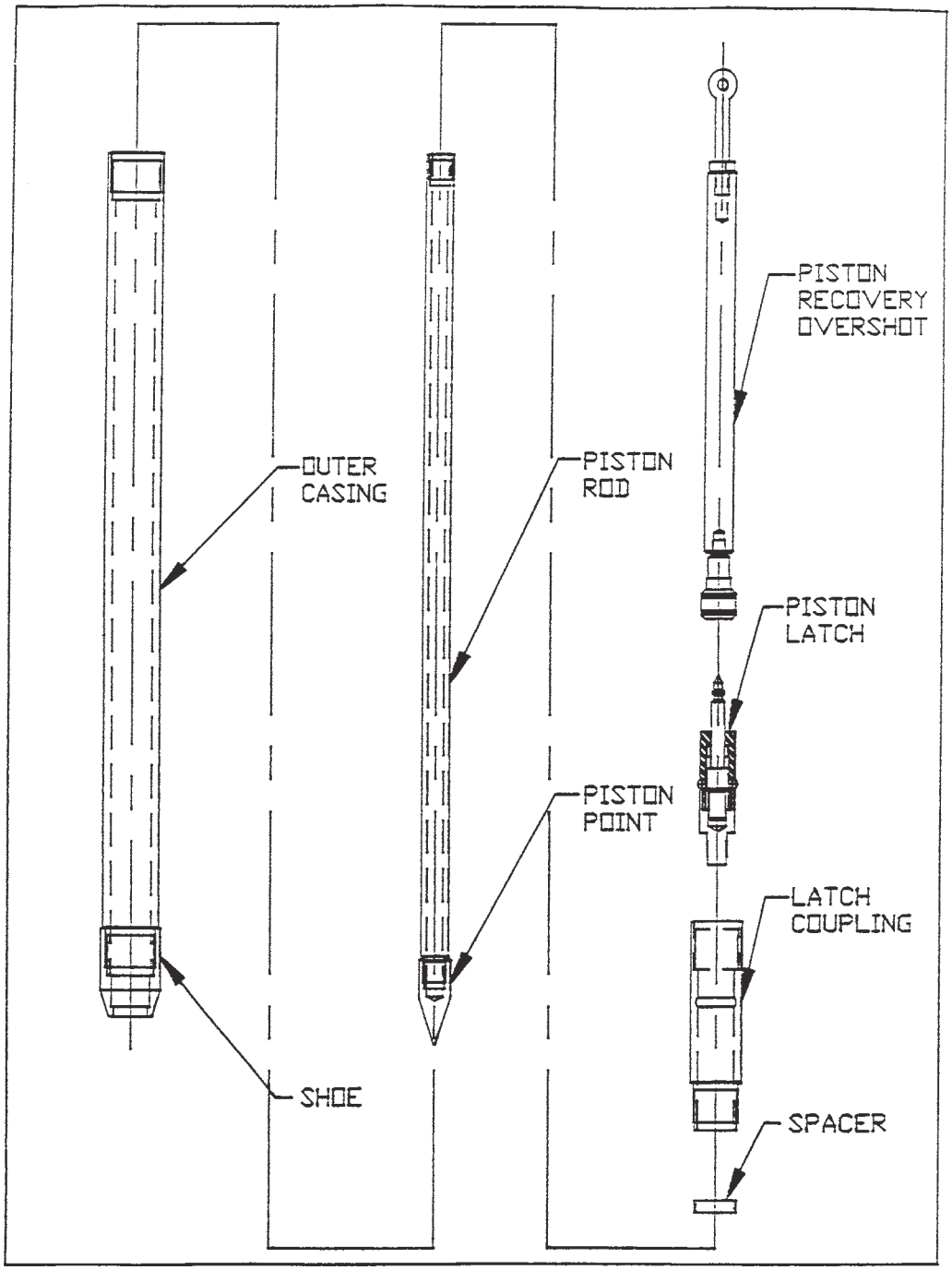


**FIG. 8 Closed Solid Barrel Sampler, Single Tube System**

sampler and extension rods by using hydraulic rams to apply pressure. The pressure applied is limited to the reactive weight of the drive vehicle. Retraction of the sampler and extension rods is by static pull from the hydraulic rams.

7.4.4 *Vibratory/Sonic Systems*—These systems utilize a vibratory device, which is attached to the top of the sampler extension rods. Reactive pressure and vibratory action are applied to the sampler extensions moving the sampler into the formation. In certain formations, sample recovery and formation penetration is expedited; however, all formations do not react the same to vibratory penetration methods.

7.4.4.1 *Sonic or Resonance Drilling Systems*—These are high powered vibratory systems that can be effective in advancing large diameter single or dual tube systems. They generally have depth capabilities beyond the smaller direct push systems.

7.4.5 *Rotary Drilling Equipment*—Direct push systems are readily adaptable to rotary drill units. The drill units offer a ready hydraulic system to operate percussion hammers, as well as reactive weight for static push. Because most drills are equipped with leveling jacks, better weight application is achieved. Vertical pushing is improved because of the ability to

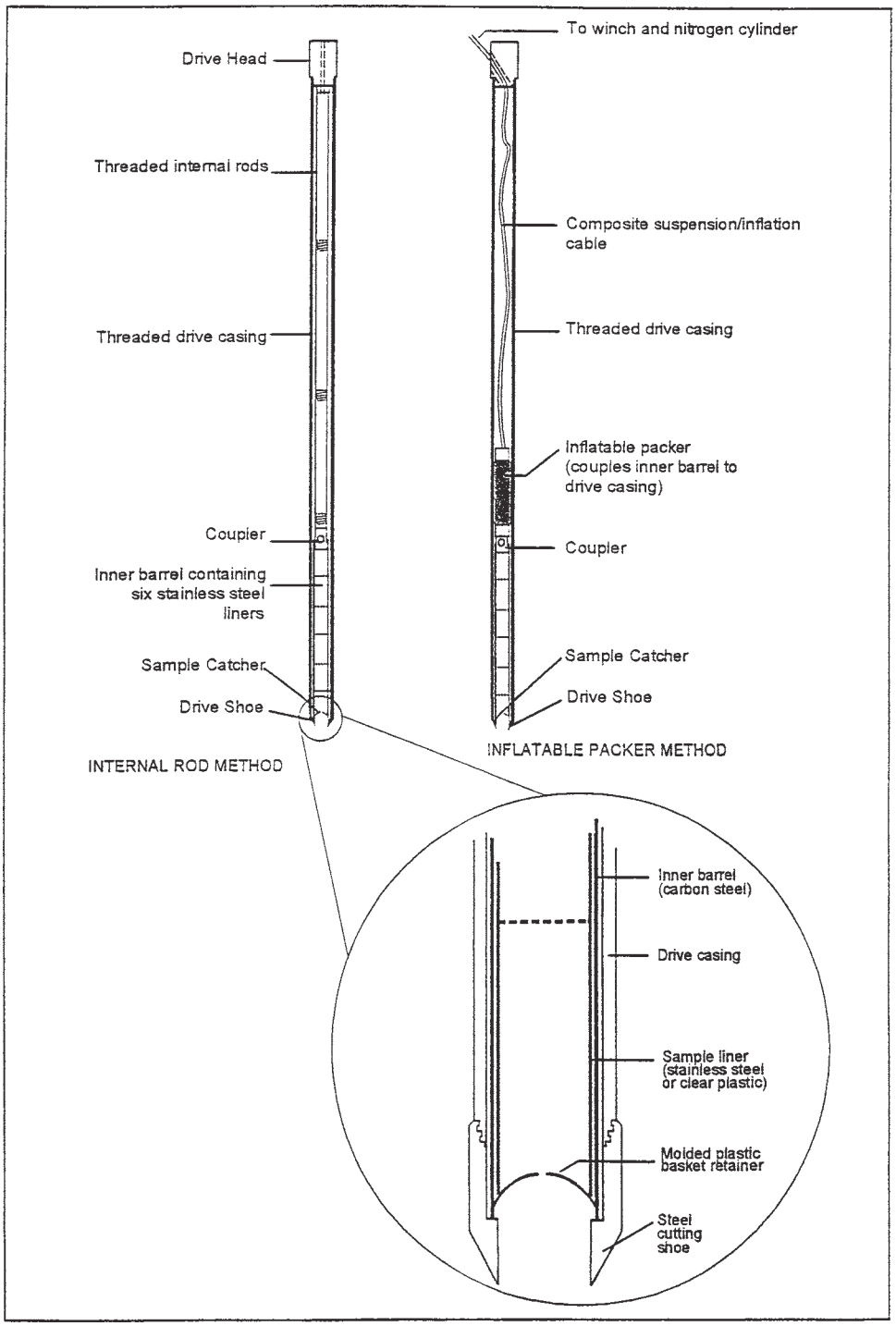


**FIG. 9 Sampler Holding Methods, Two Tube System**

level the machine. Tool handling is facilitated by high speed winches common to drilling rigs, extended masts for long tool pulls, and longer feed stroke length. Drill units with direct push adaptations also offer drilling techniques should obstacles be encountered while using direct push technology. Large drill units may have reactive weights that can exceed the tool capacity, thereby resulting in damaged tools.

## 8. Conditioning

8.1 *Decontamination*—Sampling equipment that will contact the soil to be sampled should be cleaned and decontaminated before and after the sampling event. Extension rods should be cleaned prior to each boring to avoid the transfer of contaminants and to ease the connecting of joints. Thread

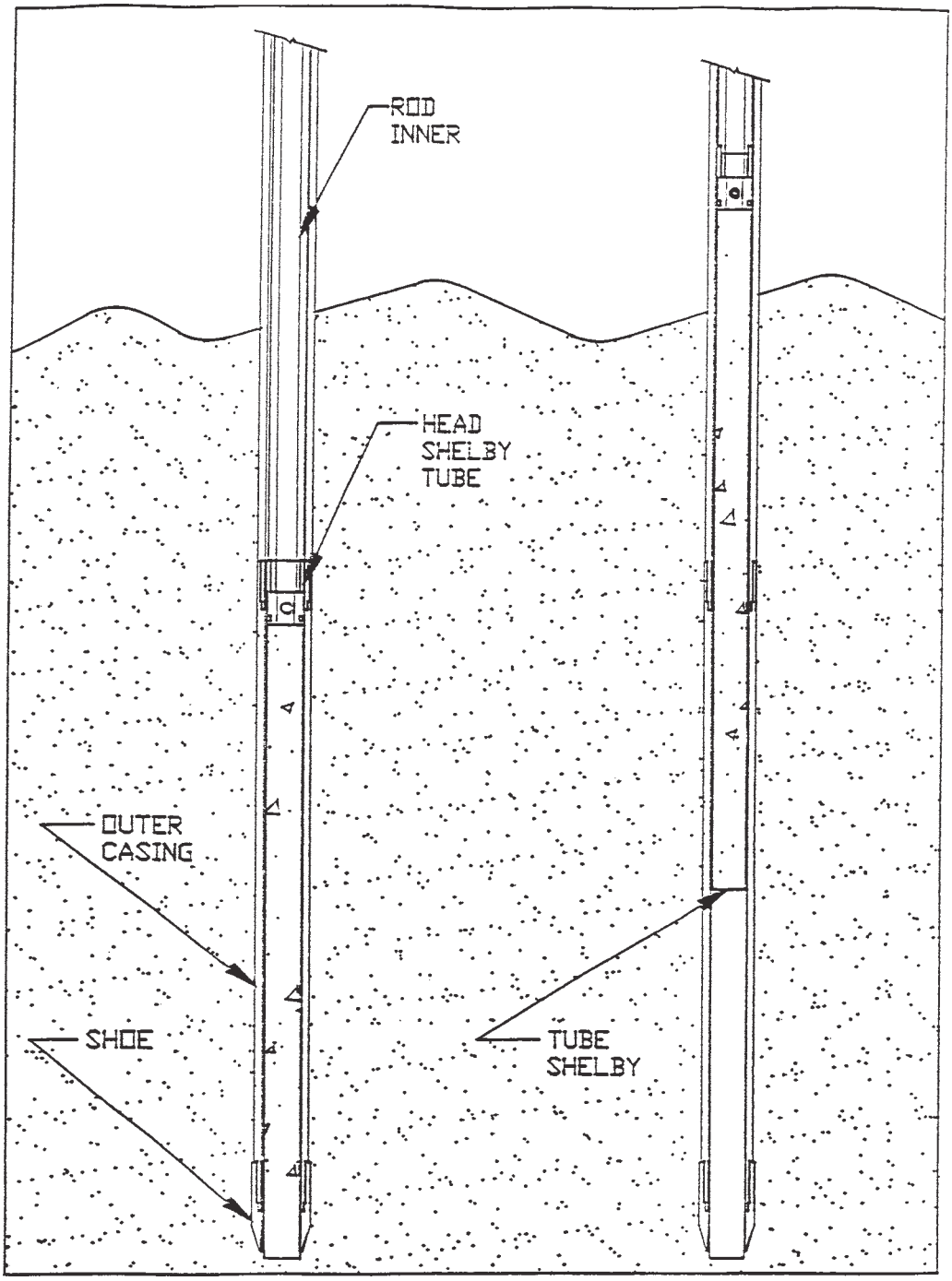


**FIG. 10 Thin Wall Tube Sampler, Two Tube System**

maintenance is necessary to ensure long service life of the tools. Sample liners should be kept in a sealed or clean environment prior to use. Reusable liners should be decontaminated between each use. All ancillary tools used in the sampling process should be cleaned thoroughly, and if contaminants are encountered, decontaminated before leaving the site. It should not be assumed that new tools are clean. They should be cleaned and decontaminated before use. Decontamination should be performed following procedures outlined in Practice D 5088 along with any site safety plans, sampling protocols, or regulatory requirements.

8.2 *Tool Selection*—Prior to dispatch to the project site an inventory of the necessary sampling tools should be made. Sample liners, containers, sampling tools, and ancillary equipment should be checked to ensure its proper operation for the work program prescribed. Sampling is expedited by having two or more samplers on site. Since samples can be recovered quite fast, a supply of samplers will allow a boring to be

completed so other functions can be performed while samples are being processed. A backup tool system adaptable to and within the capabilities of the power source should be available should the original planned method prove unworkable. Materials for proper sealing of boreholes should always be available at the site **(5-7)**.

## 9. Procedure

9.1 While procedures for direct push soil sampling with two common direct push methods are outlined here, other systems may be available. As long as the basic principles of practice relating to sampler construction and use are followed, other systems may be acceptable.

9.2 *General Set-Up*—Select the boring location and check for underground and overhead utilities and other site obstructions. Establish a reference point on the site for datum measurements, and set the direct push unit over the boring location. Stabilize and level the unit, raise the drill mast or frame into the drilling position, and attach the hammer assembly to the drill head if not permanently attached. Attach the anvil assembly in the prescribed manner, slide the direct push unit into position over the borehole, save a portion of the sliding distance for alignment during tool advancement, and ready the tools for insertion.

9.2.1 *Tool Preparation*—Inspect the direct push tools before using, and clean and decontaminate as necessary. Inspect drive shoes for damaged cutting edges, dents, or thread failures as these conditions can cause loss of sample recovery and slow the advancement rate. Where permissible, lubricate rod joints with appropriate safe products, and check impact surfaces for cracks or other damage that could result in failure during operations. Assemble samples and install where required, install sample retainers where needed, and install and secure sampler pistons to ensure proper operation where needed.

9.2.2 *Sample Processing*—Sample processing should follow a standard procedure to ensure quality control procedures are completed. View sample in the original sampling device, if possible. Open the sampling device with care to keep disturbance to a minimum. When using liners or thin wall tubes, protect ends to prevent samples from falling out or being disturbed by movement within the liner. Measure recovery accurately, containerize as specified in the work plan or applicable ASTM procedures, and label recovered samples with sufficient information for proper identification. When collecting samples for volatile chemical analysis, sample specimens must be contained and preserved as soon as possible to prevent loss of these components. Follow work plan instructions or other appropriate documents (see Practice D 3694) when processing samples collected for chemical analysis.

9.3 *Two Tube System*:

9.3.1 *Split Barrel Sampling (see Fig. 1)*—Assemble the outer casing with the drive shoe on the bottom, attach the drive head to the top of the outer casing, and attach the sampler to the extension rods. Connect the drive head to the top of the sampler extension rods, and insert the sampler assembly into the outer casing. The sampler cutting shoe should contact the soil ahead of the outer casing to prevent unnecessary sample disturbance. The split spoon cutting shoe should extend a minimum of 0.25 in. (6.25 mm) ahead of the outer casing. Greater extensions may improve recovery in soft formations. Mark the outer casing to designate the required drive length, position the outer casing and sampler assembly under the drill head, and move the drill head downward to bring pressure on the tool string. If soil conditions allow, advance the sampler/casing assembly into the soil at a steady rate slow enough to allow the soil to be cut by the shoe and move up inside the sample barrel. If advancement is too rapid, it can result in loss of recovery because of soil friction in the shoe. Occasional hammer action during the push may help recovery by agitating the sample surface. If soil conditions prevent smooth static push advancement, activate the hammer to advance the sampler. Apply a continuous pressure while hammering to expedite soil penetration. The pressure required is controlled by subsurface conditions. Applications of excessive down pressure may result in the direct push unit being shifted off the borehole causing misalignment with possible tool damage. Stop the hammer at completion of advancement of the measured sampling barrel length. Release the pressure and move the drill head off the drive head. Attach a pulling device to the extension rods or position the hammer bail and retrieve the sampler from the borehole. At the surface remove the sampler from the extension rods and process. Soil classification is accomplished easily using split barrel samplers as the specimen is available readily for viewing, physical inspection and subsampling when the barrel is opened. Clean, decontaminate, and reassemble the sampler. Reattach the sampler to the extension rod, add the necessary extension rod and outer casing to reach the next sampling interval, and sound the borehole for free water before each sample interval. If water is present, it may be necessary to change sampling tools. Unequal pressure inside the casing may result in blow-in of material disturbing the soil immediately below the casing. Lower the sampler to its proper position, add the drive heads, and repeat the procedure. If it is desired that the pass through certain strata without sampling, install an extension rod point in lieu of the sampler. When the sampling interval is reached, remove the point and install the sampler. Advance the sampler as described. Upon completion of the borehole, remove the outer casing after instrumentation has been set or as the borehole is sealed as described in Section 10 **(6)**.

9.3.2 *Two Tube System—Other Samplers*:

9.3.2.1 *Thin Wall Tubes*—Thin wall tubes (see Fig. 10) can be used with the dual tube system. Attach the tube to the tube head using removable screws. Attach the tube assembly to the extension rods and position at the base of the outer casing shoe protruding a minimum of 0.25 in. (6.25 mm) to contact the soil ahead of the outer casing. Advance the tube, with or without the outer casing, at a steady rate similar to the requirements of Practice D 1587. At completion of the advancement interval, let the tube remain stationary for 1 min. Rotate the tube slowly two revolutions to shear off the sample. Remove the tube from the borehole, measure recovery, and classify soil. The thin wall tube can be field extruded for on-site analysis or sealed in accordance with Practice D 4220 and sent to the laboratory for

processing. Samples for environmental testing generally require the subsampling and preservation of samples in controlled containers. Soil samples generally are removed from the sampling device for storage and shipping. Thin wall tubes should be cleaned and decontaminated before and after use.

9.3.2.2 *Thin Wall Tube Piston Sampler (see Fig. 11)*—Check the fixed piston sampling equipment for proper operation of the cone clamping assembly and the condition of the sealing "O" rings. Slide the thin wall tube over the piston, and attach it to the tube head. Position the piston at the sharpened end of the thin wall tube just above the sample relief bend. Attach the sampler assembly to the extension rods, and lower the sampler into position through the outer casing. Install the actuator rods through the extension rod, and attach to the actuator rod in the sampler assembly. Attach a holding ring to the top of the actuator rod string, and hook the winch cable or other hook to the holding ring to hold the actuator rods in a fixed position. Attach the pushing fork to the drill head/probe hammer, and slowly apply downward pressure to the extension rods advancing the thin wall tube over the fixed piston into the

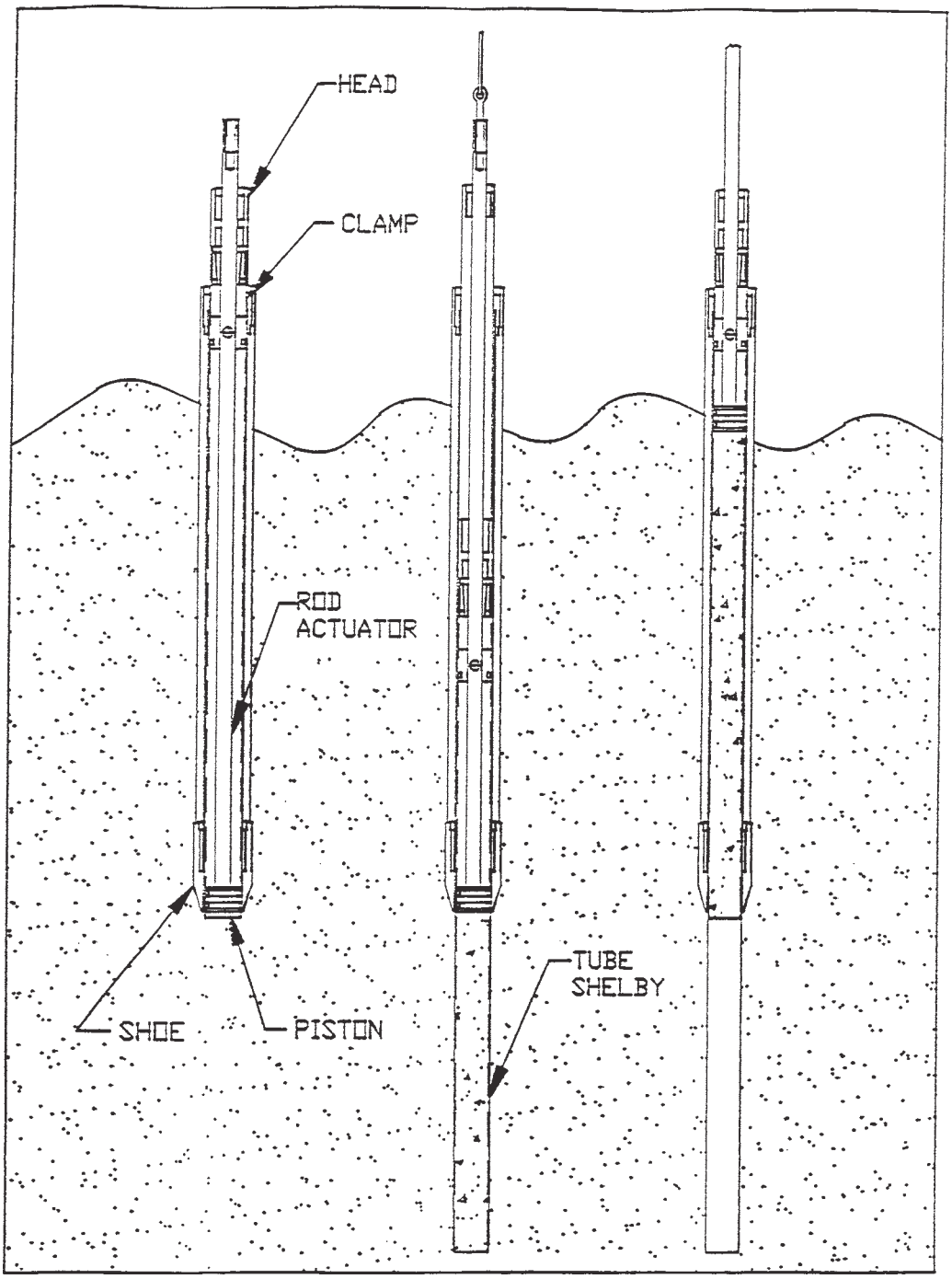


**FIG. 11 Fixed Piston Sampler, Two Tube System**

soil for the sample increment. Rest sampler 1 min to allow sample to conform to tube. Rotate tube one revolution to shear off sample. Remove sampler assembly from borehole and process sample **(6)**.

9.3.2.3 *Open Solid Barrel Samplers*—Use solid barrel samplers in advance of the outer casing where the soil conditions could cause swelling of split barrel samplers, or where friction against the outer casing precludes its advancement and sampling must still be accomplished. The solid, single, or segmented barrel sampler requires the use of liners for removal of the sample. The sampler must be cleaned and decontaminated before use. Use of the sampler follows the procedure described in 9.3.1.

9.4 *Single Tube System*:

9.4.1 *Open Solid Barrel Sampler (see Figs. 5 and 6)*—Attached the required liner to the cutting shoe by insertion into the machined receptacle area or by sliding over the machined tube. Insert the liner and shoe into the solid barrel, and attach the shoe **(6, 8-11)**. Attach the sampler head to the sampler barrel providing a backing plate for the liner. Attach the sampler assembly to the drive rod and the drive head to the drive rod. Position the assembly under the hammer anvil and advanced as described in 9.3.1. At completion of the sampling increment, remove the sampler from the borehole. Remove the filled sample liner from the barrel by unscrewing the shoe, cap the liner for laboratory testing or spit open for field processing, and advance the borehole by repeating the procedure. Because the solid barrel cannot be opened for cleaning, it may require more effort for cleaning and decontamination. The open solid barrel sampler is used in soil formations that have sufficient wall strength to maintain a borehole wall without sloughing or cave-in. In soil formations not affording such structure, other sampling methods may be required or the opening sealed. To enhance recovery in some soil strata, it may be necessary to vary the length of the sampling increment. Shorter increments generally improve recovery because of lower sample friction and compression inside the sampler chamber. Sample recovery can be enhanced in some formations by intermittent use of the percussion hammer **(6, 8, 10, 11)**.

9.4.2 *Closed Solid Barrel Sampler (see Figs. 5-7,* Fig. 11*)*—Insert or attach the sample liner to the shoe, and insert the assembly into the solid barrel sampler. Install sample retaining basket if desired. Attach the latch coupling or sampler head to the sampler barrel, and attach the piston assembly with point and“ O” rings if free water is present, to the latching mechanism or holder. Insert the piston or packer into the liner to its proper position so the point leads the sampler shoe. Set latch, charge packer, or install locking pin, and attach assembled sampler to drive rod. Add drive head and position under the hammer anvil. Apply down pressure, hammer if needed, to penetrate soil strata above the sampling zone. When the sampling zone is reached, insert the piston latch release and recovery tool, removing the piston, or insert the locking pin removal/extension rods through the drive rods, turn counterclockwise, and remove the piston locking pin so the piston can float on top of the sample, or release any other piston holding device. Direct push or activate the hammer to advance the sampler the desired increment. Retrieve the sampler from the borehole by withdrawing the extension/drive rods. Remove the shoe, and withdraw the sample liner with sample for processing. Clean and decontaminate the sampler, reload as described, and repeat the procedure. Extreme stress is applied to the piston when driving through dense soils. If the piston releases prematurely, the sample will not be recovered from the correct interval, and a resample attempt must be made. The piston sampler can be used as a re-entry grouting tool for sealing boreholes on completion if it is equipped with a removable piston **(5, 6, 7, 10, 11)**.

9.4.3 *Standard Split Barrel Sampler*—Attach the split spoon to an extension rod or drill rod. Using a mechanical or hydraulic hammer drive the sampler into the soil the desired increment, as long as that increment does not exceed the sampler chamber length. Remove the sampler from the borehole, disassemble, and process sample. Standard split barrel samplers can be used, as long as borehole wall integrity can be maintained and the additional friction can be overcome. If caving or sloughing occurs, the sampler tip should be sealed or other sampling tools used **(9)**.

9.5 *Quality Control*:

9.5.1 *Quality Control*—Quality control measures are necessary to ensure that sample integrity is maintained and that project data quality objectives are accomplished. By following good engineering principles and applying common sense, reliable site characterizations can be accomplished.

9.5.2 *Water Checks*—Water seeping into the direct push casing or connecting rods from contaminated zones may influence testing results. Periodically check for ground water before inserting samplers into borehole or into outer casings in the two tube system. If water is encountered, it may be necessary to switch to the sealed piston type samplers to protect sample integrity. Sealed piston type samples may not always be water tight. Sealing of rod or casing joints can prevent ground water from entering through the joints.

9.5.3 *Datum Points*—Establishment of a good datum reference is essential to providing reliable sample interval depths and elevators. Select datum reference points that are sufficiently protected from the work effort, and that can be located for future reference. Field measurements should be to 0.1 ft (3.05 mm). Measure extension rods as the bore advances to locate sample depth. Mark rods before driving each sample interval to determine accurate measurement of sample recovery and to accurately log borehole depth.

9.5.4 *Sample Recovery*—Sample recovery should be monitored closely and results documented. Poor recovery could indicate a change in sampling method is needed, that improper sampling practices are being conducted, or that sampling tools are incorrect. Sample recovery involves both volume and condition. Poor sample recovery should cause an immediate review of the sampling program.

9.5.5 *Decontamination*—Follow established decontamination procedures. Taking shortcuts may result in erroneous or suspect data.

## 10. Completion and Sealing

10.1 *Completion*—For boreholes receiving permanent monitoring devices, completion should be in accordance with Practice D 5092, site work plan, or regulatory requirements.

10.2 *Borehole Sealing*—Seal direct push boreholes to minimize preferential pathways for containment migration. Additional information and guidance on borehole sealing can be found in Guide D 6001 and in Guide D 5299. State or local regulations may control both the method and the materials for borehole sealing. Regulations generally direct bottom up borehole sealing as it is the surest and most permanent method for complete sealing. High pressure grouting is available for use with direct push technology for bottom up borehole sealing.

10.2.1 *Sealing by Slurry, Two Tube System*—Sound the borehole for free water. If water exists in the casing, place the extension rods, open-ended, to the bottom of the outer casing, as a tremie. Mix the slurry to standard specifications prescribed by regulation or work plan. Pump slurry through the extension/drive rod until it appears at the surface of the outer casing. Remove the extension rods. If no free water exists in the borehole, the slurry can be placed by gravity. Top off the outer casing as it is removed from the borehole.

10.2.1.1 *Slurry Mixes*—Slurry mixes used for slurry grouting of direct push boreholes generally are of lower viscosity because of the small diameter tremie pipes required. Usable mixes are 6 to 8 gal (22.7 to 30.28 L) of water/94-lb (42.64-kg) bag of cement with 5 lb (2.27 kg) of bentonite or 24 to 36 gal (90.84 to 136.28 L) of water to 50 lb (22.68 kg) of bentonite.

10.2.2 *Sealing by Gravity—Two Tube System*—Measure the cased hole to ensure it is open to depth. Slowly add bentonite chips or granular bentonite to fill the casing approximately 2 ft. Withdraw the casing 2 ft and recheck depth. Hydrate the bentonite by adding water. Repeat this procedure as the outer casing is withdrawn. The bentonite must be below the bottom of the casing during hydration. Wetness inside the rods may affect the flow of granular bentonite to the bottom of the casing. Fill the top foot of the borehole with material that is the same as exists in that zone.

10.2.3 *Borehole Sealing Single Tube System*:

10.2.3.1 *Gravity Sealing from Surface*—If the soil strata penetrated has sufficient wall strength to maintain an open hole, then it may be possible to add sealing materials from the surface. Dry bentonite chips or granular bentonite can be placed by gravity. The borehole volume should be determined and the borehole sounded every 10 ft (3 m) to ensure bridging has not occurred. The bentonite should be hydrated by adding approximately 1 pt (0.57 L) of water for each 5 ft of filled borehole. Seal the surface with native material.

10.2.3.2 *Wet Grout Mix Tremie Sealing*—Tremie sealing methods can be used with single tube systems when borehole wall strength is sufficient to maintain an open hole or when extension rods with an expendable point are used to reenter the borehole. The grout pipe should be inserted immediately after the direct push tools are withdrawn or through the annulus of the extension rods that have been reinserted down the borehole for grouting. Care must be taken to not plug the end of the grout pipe. Side discharge grout pipes also can be used to prevent plugging.

10.2.4 *Re-Entry Grouting*—If the borehole walls are not stable, the borehole can be re-entered by static pushing grouting tools, such as an expendable point attached to the extension/drive rods to the bottom of the original borehole. Pump a slurry through the rods as they are withdrawn. High pressure grouting equipment may be beneficial in pumping standard slurry mixes through small diameter gravity pipes. Care must be taken to ensure the original borehole is being sealed.

## 11. Record Keeping

11.1 *Field Report*—The field report may consist of boring log or a report of the sampling event and a description of the sample. Soil samples can be classified in accordance with Practice D 2488 or other methods as required for the investigation **(12)**. Prepare the log in accordance with standards set in Guide D 5434 listing the parameters required for the field investigation program. List all contaminants identified, instrument readings taken, and comments on sampler advancement. Record any special field tests performed and sample processing procedures beyond those normally used in the defined investigation. Record borehole sealing procedures, materials used, and mix formulas on the boring log. Survey or otherwise locate the boring site to provide a permanent record of its replacement.

11.2 *Backfilling Record*—Record the method of sealing, materials used, and volume of materials placed in each borehole. This information can be added to the field boring log or recorded on a separate abandonment form.

## 12. Keywords

12.1 decontamination; direct push; ground water; sealing; soil sampling

## REFERENCES


**(1)** Ford, Patrick J., and Turine, Paul J., *"Characterization of Hazardous Waste Sites—A Methods Manual" Vol II, Available Sampling Methods*, Second Edition, (Appendix A: Sample Containerization and Preservation), December 1984, EPA-600/4-84-076.

**(2)** Mayfield, D., Waugh, J., and Green, R., "*Environmental Sampling Guide in Environmental Testing and Analysis Product News*, Vol 1, No. 1, April 1993.

**(3)** McLoy and Associates, Inc. "Soil Sampling and Analysis—Practice and Pitfalls," *The Hazardous Waste Consultant*, Vol 10, Issue 6, 1992.

**(4)** Kay, J. N., "Technical Note," "*Symposium on Small Diameter Piston Sampling with Cone Penetrometer Equipment*," ASTM, 1991.

**(5)** Einearson, M.D., *"Wire Line Sample Recovery System,"* Precision Sampling Incorporated, San Fafael, CA, 1995.

**(6)** Ruda, T.C., "Operating the Diedrich Drill ESP System Tools," LaPorte, IN, 1995.

**(7)** Sales Division, "GS-1000 Series Grout System," Geoprobe System, 1996.

**(8)** Sales Division, "Catalogue of Products," Geoprobe, Inc., Standard Operating Procedures, Technical Bulletin No. 93-660, 1993.

**(9)** Sales Division, "Catalogue of Products," Diedrich Drill, Inc., LaPorte, IN, 1995.

**(10)** Sales Division, "Geoprobe Macro-Core Soil Sampler, Standard Operating Procedure," Technical Bulletin No. 95–8500, November 1995.

**(11)** Sales Division, "Geoprobe AT-660 Series Large Bore Soil Sampler, Standard Operating Procedures," Technical Bulletin No. 93–660, Revised: June 1995.

**(12)** Boulding, J.R., *"Description and Sampling of Contaminated Soils: A Field Pocket Guide,"* EPA-625/12-91/002; 1991 (second edition published in 1994 by Lewis Publishers).



*ASTM International takes no position respecting the validity of any patent rights asserted in connection with any item mentioned in this standard. Users of this standard are expressly advised that determination of the validity of any such patent rights, and the risk of infringement of such rights, are entirely their own responsibility.*

*This standard is subject to revision at any time by the responsible technical committee and must be reviewed every five years and if not revised, either reapproved or withdrawn. Your comments are invited either for revision of this standard or for additional standards and should be addressed to ASTM International Headquarters. Your comments will receive careful consideration at a meeting of the responsible technical committee, which you may attend. If you feel that your comments have not received a fair hearing you should make your views known to the ASTM Committee on Standards, at the address shown below.*

*This standard is copyrighted by ASTM International, 100 Barr Harbor Drive, PO Box C700, West Conshohocken, PA 19428-2959, United States. Individual reprints (single or multiple copies) of this standard may be obtained by contacting ASTM at the above address or at 610-832-9585 (phone), 610-832-9555 (fax), or service@astm.org (e-mail); or through the ASTM website (www.astm.org).*

*SOP L-11:*

SAMPLING WITH WATERRA HAND PUMP USING GEOPROBE TOOLING

Wattera Sampling Worksheet

*ASTM D 6001 - GeoProbe Groundwater Sampling*

*GeoSearch Geoprobe Groundwater Sampling Description Attachment*

# SAMPLING WITH THE WATERRA HAND PUMP USING GEOPROBE TOOLING

This Standard Operating Procedure (SOP) *Sampling with the Waterra Hand Pump Using Geoprobe Tooling* provides a general framework for sampling using the Wattera hand pump with the Geoprobe at the Troy Mills Landfill Superfund Site in Troy, New Hampshire.

The Waterra hand pump can operate at a maximum depth of 250 feet and can have a maximum flow of 2 gallons per minute. It can fit into a well with a one-inch inner diameter. The WaTerra hand pump is mainly used for purging wells and may be used for collecting inorganic samples. It is recommended that once the well is purged that a bottom dispensing bailer or other method be used to procure samples for volatile organic compounds (VOCs). The Waterra pump may be used for the collection of VOCs or semi-VOCs under certain circumstances if it meets the quality assurance objectives for the project, the method is noted, it is approved by the project manager and the results are flagged.

For this project it has been determined that using a bailer or other method to collect the samples is not appropriate with the Geoprobe tooling. Because the sample results are being used as a screening tool and will be qualified, the Waterra meets the quality assurance objectives for the project and may be used with the Geoprobe tooling to collect groundwater samples for VOCs and semi-VOCs. As a screening tool there is no need to purge the well prior to sampling.

The Waterra Model 404 hand pump is an inertial pump which consists of a stainless steel level with a handle, a Teflon lined polyethylene riser tube, and a standard foot valve sized for the tubing. The tubing with the one-way check valve is lowered into the well and gradually raised. As the valve is pushed down water enters the tube. The water rises and discharges out of the tube.

This SOP also provides a general framework for taking turbidity field measurements of groundwater samples that are indicative of total particulate loading in the groundwater sample which may result in biasing the semi-volatile compound chemical analysis. High turbidity may indicate there is a risk of the groundwater sample containing soil particulates which have adsorbed semi-volatile compounds which may result in the chemical analysis for semi-volatile compounds showing a higher concentration value than is actually present in the groundwater.

Groundwater turbidity will be measured in the field using the Hach 2100P meter just prior to taking the SVOC sample.

## EQUIPMENT AND MATERIALS

The following is a list of equipment and material commonly used for the collection of groundwater samples:

- Appropriate health and safety gear and an approved site-specific Health and Safety Plan;
- Water-level indicator, with a ¼ inch outside diameter probe;
- Wattera pump;
- 3/8-inch OD and 1/4-inch ID high-density polyethylene (HDPE lined internally with Teflon), enough for each location;
- Stainless steel or teflon standard foot valves sized for the tubing;
- Hach 2100P Turbidity Meter and its user manual;
- Calibration standards for the Hach meter: <0.1, 20, 100, and 800 NTU;
- Appropriate sample container for use in Hach 2100P Turbidity Meter;
- Protect both personnel and equipment from the elements;
- Plastic sheeting;
- Sample labels, chain-of-custody records and custody seals;
- Self-sealing plastic bags and packing for sample transport;
- Sample containers including spare containers, preserved as necessary;
- Loose ice and a sample cooler
- Toolbox (to include at least: bolt cutters, spare well locks, screwdrivers, pliers, hacksaw, hammer, flashlight, adjustable wrench), socket set, duct tape, well key;
- Trash bags to containerize solid waste; and
- Decontamination supplies.

## EQUIPMENT/INSTRUMENT CALIBRATION

1.& In general, all instrumentation necessary for field monitoring and health and safety purposes shall be maintained, tested, and inspected according to the manufacturer s instructions prior to the sampling event. This will ensure that the equipment/instruments are working properly before they are used in the field. The manufacturer's instruction manuals for field equipment shall be on site during each sampling event.

2.& The turbidity meter shall be calibrated, and have a calibration check, in the office prior to the field event (within one week) to ensure that the meter is working properly and meets the QA criteria.

**3.&** For this project, **c**alibration checks, made in the run mode, shall be performed at the beginning of each sampling day to ensure the equipment is in calibration and again at the end of the day of use to ensure that the instruments have remained in calibration throughout the day.

**4.&** If a calibration check at the end of the day is not within the acceptable range, the data collected that day shall be qualified in its use. This qualification shall be documented on the calibration log and the field sheets/logs for the appropriate sampling locations.

In addition, should any erratic or illogical readings occur between calibrations, the instrument shall be recalibrated in order to ensure that representative measurements are obtained. All calibration and check values shall be documented on the calibration log maintained by each user. Refer to the *Calibration of the Hach Field Instrument* in **Appendix B** for specific calibration procedures.

5. Failure to calibrate or perform proper maintenance on the sampling equipment and measurement instruments (e.g., Hach meter for turbidity) can result in faulty data being collected.

**PRELIMINARY PROCEDURES**:

An equipment blank must be collected on the check valve prior to sampling. Gently pour DI water over the check valve and collect the rinsate that flows off into the appropriate sample containers. Refer to **Table 5** included in the SAP for specific QC sampling requirements.

New tubing and a new check valve will be used at each groundwater sampling location.

Record the sampling depth (midpoint of the geoprobe screen) in the comments section of the chain-of custody form.

**PROCEDURE FOR OPERATION**:

1. & Position the pump so that tubing does not hit the well cap or hasp of the well casing.

2. & Then mount the Wattera pump handle to the well casing by adjusting the clamps, which are located by the hold rings.

3. & Sever the edge of the Teflon lined HPDE polyethylene tubing to create a groove for the foot valve with threading to attach.

4. & Screw on the foot valve to the bottom of the tubing by turning the foot valve in a clockwise direction. The threading of the tubing should mesh with the tubing.

5. & Check that the foot valve is secure by pulling on the foot valve. If the foot valve loosens, rethread it on to the tubing.

6. & Securely hold the tubing and lower the end with the foot valve on it to the middle of the screened interval. The tubing should be positioned vertically through the well and not coil.

7. & Loop the tubing through the "holder" (clamps) in the handle.

8. & Continue to loop the tubing below the handle and place it in the "hold ring". The discharge end of the tubing should not move freely. If it moves freely, it may splatter water.

9.& The tubing should be horizontal, after it passes through the loop, and then positioned to dip down into a bucket for purge water.

10.& Lower the ¼ inch diameter water level probe through the Geoprobe casing until ground water is encountered. Collect a water level measurement according to the Water Level /LNAPL Thickness Measurement SOP in the SAP. Record the water level measurement on the Wattera Sampling Worksheet.

11.& No purging is required. Collect the groundwater samples in this order:

a. Collect VOCs first,

b.& Then collect an aliquot of water for the Hach and analyze the sample for turbidity. Record the value on the Wattera Sampling Worksheet.

c.& Collect SVOCs (base neutrals).

& Gradually lift the pump handle in a stroking motion. Do not jerk the pump. Be sure to keep the check valve within the one foot Geoprobe screen. Reduce flow and hold tube, so that it discharges into the sample container.

& VOCs vials must be collected with a continuous flow. SVOCs may be collected in intervals as long as the bottle is capped in between.

All sample containers should be filled by allowing the discharge to flow gently down the inside of the container with minimal turbulence. Cap sample containers securely after filling each bottle. Sample containers should be wiped dry.

& If necessary, under low recharge conditions, it is permissible to:

- Take the tubing out of the well and use the water captured by the foot valve to fill the containers.

- Collect the SVOC samples over a 24 hour period unless the sampling is going to tie-up the use of geoprobe equipment. If the SVOC sample cannot be collected within a 24 hour period contact the GZA project manager who will confer with the NHDES project manager on how to proceed.

12. & After collection of the samples, place samples in re-sealable plastic bags and then in loose ice within the cooler.

13. & If a field duplicate or MS/MSD sample is required, fill a separate container for each analysis immediately following the actual field sample collection and it should be in the same priority order, VOCs first, then SVOCs, as indicated above. Duplicate samples are not intended to be blind duplicate samples. They should be designated with a "DUP" after the sample designation (i.e. TRY_GW-C2-45 DUP) as indicated in the SAP. Refer to **Table 5** included in the SAP for specific QC sampling requirements.

14. & Record the sampling depth (midpoint of the geoprobe screen) in the comments section of the chain-of custody form.

15. & Once sampling is complete, dismount the Wattera hand pump.

16. & Pull out the tubing and detach foot valve. The foot valve may be decontaminated. The tubing should be properly discarded.

17. & Decontaminate equipment following the Decontamination SOP in the SAP. Non-dedicated sampling equipment shall be properly discarded after completing the sampling task.

## QUALITY ASSURANCE/QUALITY CONTROL (QA/QC)

An equipment blank must be collected on the check valve prior to sampling, see preliminary procedures above. One Duplicate and one MS/MSD sample shall be collected per sampling event. Refer to **Table 5** in the SAP for specific quality assurance requirements.

## DOCUMENTATION

Use the sampling worksheet to document water level measurement, turbidity reading and observations or comments. Note the sampling depth (midpoint of the geoprobe screen) in the comments section of the chain-of custody form.

## ATTACHMENTS

Wattera Sampling Worksheet

*ASTM D 6001 - GeoProbe Groundwater Sampling*

*GeoSearch Geoprobe Groundwater Sampling Description Attachment*

**Waterra Sampling Worksheet**
**Troy Landfill Superfund Site, Troy, New Hampshire**

| Station ID | Date | Time | Water Level | Turbidity NTU | Comments / Observations |
|---|---|---|---|---|---|
| | | | | | |
| | | | | | |
| | | | | | |
| | | | | | |
| | | | | | |
| | | | | | |
| | | | | | |
| | | | | | |
| | | | | | |
| | | | | | |
| | | | | | |
| | | | | | |
| | | | | | |
| | | | | | |
| | | | | | |
| | | | | | |
| | | | | | |

Notes:
When recording turbidity data record only whole numbers.
When turbidity data is less than 5 NTU, data should be recorded as "< 5" or "less than 5".

**Additional Comments/Observations:**

Designation: D 6001 – 96 (Reapproved 2002)

# Standard Guide for Direct-Push Water Sampling for Geoenvironmental Investigations[1]

This standard is issued under the fixed designation D 6001; the number immediately following the designation indicates the year of original adoption or, in the case of revision, the year of last revision. A number in parentheses indicates the year of last reapproval. A superscript epsilon (ϵ) indicates an editorial change since the last revision or reapproval.

## 1. Scope

1.1 This guide covers a review of methods for sampling ground water at discrete points or in increments by insertion of sampling devices by static force or impact without drilling and removal of cuttings. By directly pushing the sampler, the soil is displaced and helps to form an annular seal above the sampling zone. Direct-push water sampling can be one time, or multiple sampling events. Methods for obtaining water samples for water quality analysis and detection of contaminants are presented.

1.2 Direct-push methods of water sampling are used for ground-water quality studies. Water quality may vary at different depths below the surface depending on geohydrologic conditions. Incremental sampling or sampling at discrete depths is used to determine the distribution of contaminants and to more completely characterize geohydrologic environments. These investigations are frequently required in characterization of hazardous and toxic waste sites.

1.3 Direct-push methods can provide accurate information on the distribution of water quality if provisions are made to ensure that cross-contamination or linkage between water bearing strata are not made. Discrete point sampling with a sealed (protected) screen sampler, combined with on-site analysis of water samples, can provide the most accurate depiction of water quality conditions at the time of sampling. Direct-push water sampling with exposed-screen sampling devices may be useful and are considered as screening tools depending on precautions taken during testing. Exposed screen samplers may require development or purging depending on sampling and quality assurance plans. Results from direct-push investigations can be used to guide placement of permanent ground-water monitoring wells and direct remediation efforts. Multiple sampling events can be performed to depict conditions over time. Use of double tube tooling, where the outer push tube seals the hole, prevents the sampling tools from coming in contact with the formation, except at the sampling point.

1.4 Field test methods described in this guide include installation of temporary well points, and insertion of water samplers using a variety of insertion methods. Insertion methods include: (*1*) soil probing using combinations of impact, percussion, or vibratory driving with or without additions of smooth static force; (*2*) smooth static force from the surface using hydraulic penetrometer or drilling equipment, and incremental drilling combined with direct-push water sampling events. Under typical incremental drilling operations, samplers are advanced with assistance of drilling equipment by smooth hydraulic push, or mechanical impacts from hammers or other vibratory equipment. Methods for borehole abandonment by grouting are also addressed.

1.5 Direct-push water sampling is limited to soils that can be penetrated with available equipment. In strong soils damage may result during insertion of the sampler from rod bending or assembly buckling. Penetration may be limited, or damage to samplers or rods can occur in certain ground conditions, some of which are discussed in 4.6. Information in this procedure is limited to sampling of saturated soils in perched or saturated ground-water conditions.

1.6 This guide does not address installation of permanent water sampling systems such as those presented in Practice D 5092.

1.7 Direct-push water sampling for geoenvironmental exploration will often involve safety planning, administration, and documentation.

1.8 *This guide does not purport to address all aspects of exploration and site safety. It is the responsibility of the user of this guide to establish appropriate safety and health practices and determine the applicability of regulatory limitations before its use.*

1.9 *This guide offers an organized collection of information or a series of options and does not recommend a specific course of action. This document cannot replace education or experience and should be used in conjunction with professional judgment. Not all aspects of this guide may be applicable in all*

[1] This guide is under the jurisdiction of ASTM Committee D18 on Soil and Rock and is the direct responsibility of Subcommittee D18.21 on Ground Water and Vadose Zone Investigations.

Current edition approved Aug. 10, 1996. Published January 1997.

Copyright © ASTM International, 100 Barr Harbor Drive, PO Box C700, West Conshohocken, PA 19428-2959, United States.

*circumstances. This □□T□ standard is not intended to repre□ sent or replace the standard of care by which the ade□uacy of a gi□en professional ser□ice must be judged□nor should this document be applied without consideration of a project□s many uni□ue aspects. The word □□tandard□ in the title of this document means only that the document has been appro□ed through the □□T□ consensus process.*

## □. □e□e□ce□ □oc□□e□□

2.1 □□*T□ □tandards□*

D 653 Terminology Relating to Soil, Rock, and Contained Fluids[2]

D 2488 Practice for Description and Identi□cation of Soils (Visual-Manual Procedure)[2]

D 3441 Test Method for Mechanical Cone Penetration Tests of Soil[2]

D 4448 Guide for Sampling Ground-Water Monitoring Wells[3]

D 4750 Test Method for Determining Subsurface □iquid □evels in a Borehole or Monitoring Well (□bservation Well)[2]

D 5088 Practices for Decontamination of Field Equipment Used at □onradioactive Waste Sites[2]

D 5092 Practice for Design and Installation of Ground Water Monitoring Wells in Aquifers[2]

D 5229 Practice for Decommissioning Monitoring Wells[4]

D 5254 Practice for Minimum Set of Data Elements to Identify a Ground-Water Site[2]

D 5314 Guide for Soil Gas Monitoring in the Vadose Zone[2]

D 5434 Guide for Field □ogging of Subsurface Explorations of Soil and Rock[2]

D 5474 Guide for Selection of Data Elements for Ground-Water Investigation[2]

D 5521 Guide for Development of Ground-Water Monitoring Wells in Granular Aquifers[2]

D 5730 Guide for Site Characterization for Environmental Purposes With Emphasis on Soil, Rock, the Vadose Zone and Ground Water[2]

D 5778 Test Method for Performing Electronic Friction Cone and Piezocone Penetration Tests[2]

2.2 □*rilling □ethods□*

D 5781 Guide for the Use of Dual-Wall Reverse-Circulation Drilling for Geoenvironmental Exploration and the Installation of Subsurface Water- □uality Monitoring Devices[4]

D 5782 Guide for the Use of Direct Air-Rotary Drilling for Geoenvironmental Exploration and the Installation of Subsurface Water- □uality Monitoring Devices[4]

D 5783 Guide for the Use of Direct Rotary Drilling with Water-Based Drilling Fluid for Geoenvironmental Exploration and the Installation of Subsurface Water- □uality Monitoring Devices[4]

D 5784 Guide for the Use of □ollow-Stem Augers for Geoenvironmental Exploration and the Installation of Subsurface Water- □uality Monitoring Devices[4]

D 5875 Guide for the Use of Cable-Tool Drilling and Sampling Methods for Geoenvironmental Explorations and Installation of Subsurface Water- □uality Monitoring Devices[4]

D 5876 Guide for the Use of Direct Rotary Wireline Casing Advancement Drilling Methods for Geoenvironmental Exploration and the Installation of Subsurface Water- □uality Monitoring Devices[4]

2.3 □*ol □ampling□*

D 1586 Test Method for Penetration Test and Split-Barrel Sampling of Soils[2]

D 1587 Practice for Thin-Walled Tube Sampling of Soils for Geotechnical Purposes[2]

D 3550 Practice for Thick Wall, Ring- □ined, Split Barrel, Drive Sampling of Soils[2]

D 4700 Guide for Soil Sampling from the Vadose Zone[2]

## □. □e□□ □□o□o□□

3.1 Terminology used within this guide is in accordance with Terminology D 653 with the addition of the following:

3.2 De□nitions in accordance with Practice D 5092.

3.3 *bailer* □ a hollow tubular receptacle used to facilitate removal of □uid from a well or borehole.

3.4 *borehole* □ a circular open or uncased subsurface hole created by drilling.

3.5 *casing*□ pi□pe, □nished in sections with either threaded connections or beveled edges to be □eld welded, which is installed temporarily or permanently to counteract caving, to advance the borehole, or to isolate the interval being monitored, or combination thereof.

3.6 *ca□ing□sloughing* □ the in□ow of unconsolidated material into a borehole that occurs when the borehole walls lose their cohesive strength.

3.7 *centralizer* □ a device that helps in the centering of a casing or riser within a borehole or another casing.

3.8 *jetting* □ when applied as a drilling method, water is forced down through the drill rods or riser pipe and out through the end openings. The jetting water then transports the generated cuttings to the ground surface in the annulus of the drill rods or casing and the borehole. The term jetting may also refer to a well development technique.

3.9 □*T□□ tape* □ joint sealing tape composed of polytetra□uorethylene.

3.10 *well screen* □ a □ltering device used to retain the primary or natural □lter pack; usually a cylindrical pipe with openings of uniform width, orientation, and spacing.

3.11 □*efinitions of Terms □pecific to This □tandard□*

3.11.1 *assembly length* □ length of sampler body and riser pipes.

3.11.2 *bentonite* □ the common name for drilling □uid additives and well construction products consisting mostly of naturally occurring sodium montmorillonite. Some bentonite products have chemical additives that may affect water quality analyses (see 9.3.3).

3.11.3 *direct□push sampling* □ sampling devices that are directly inserted into the soil to be sampled without drilling or borehole excavation.

[2] □*nnual □oo□of □□T□ □tandards*, Vol 04.08.
[3] □*nnual □oo□of □□T□ □tandards*, Vol 11.04.
[4] □*nnual □oo□of □□T□ □tandards*, Vol 04.09.

3.11.4 *drill hole* a cylindrical hole advanced into the subsurface by mechanical means; also, known as borehole or boring.

3.11.5 *effecti□e screen length* the length of a screen open or exposed to water bearing strata.

3.11.6 *effecti□e seal length* the length of soil above the well screen that is in intimate contact with the riser pipe and prevents connection of the well screen with ground water from other zones.

3.11.7 *grab sampling* the process of collecting a sample of uid exposed to atmospheric pressure through the riser pipe with bailers or other methods that may include pumping; also know as batch sampling.

3.11.8 *incremental drilling and sampling* insertion method where rotary drilling and sampling events are alternated for incremental sampling. Incremental drilling is often needed to penetrate harder or deeper formations.

3.11.9 *in situ testing de□ices* sensors or samplers, used for obtaining mechanical or chemical test data, that are typically pushed, rotated, or driven from the surface or below the bottom of a borehole following completion of an increment of drilling.

3.11.10 *intermittent sampling de□ices* □us ually barrel-type samplers driven or pushed below the bottom of a borehole following completion of an increment of drilling.

3.11.11 *percussion dri□ing* insertion method where rapid hammer impacts are performed to insert the sampling device. The percussion is normally accompanied with application of static down force.

3.11.12 *push depth* the depth below a ground surface datum that the end or tip of the direct-push water sampling device is inserted.

## □. S□□ □ □□□ o□□ □□□e

4.1 Direct-push water sampling consists of pushing a protected well screen to a known depth, opening the well screen over a known interval, and sampling water from the interval. A well point with an exposed screen can also be pushed with understanding of potential cross-contamination effects and purging requirements considered. A sampler with constant outside diameter is inserted directly into the soil by hydraulic jacking or hammering until sufficient riser pipe is seated into the soil to ensure a seal. Protected well screens can be exposed by retraction of riser pipes. While the riser is seated in the soil, water samples can be taken, and water injection or pressure measurements may be performed.

## □. S□□□□c□□ce □□□ □□e

5.1 Direct-push water sampling is an economical method for obtaining discrete ground-water samples without the expense of permanent monitoring well installation □**1**□□[5]□This guide can be used to pro□le potential ground-water contamination with depth by performing repetitive sampling events. Soils to be sampled must be permeable to allow lling of the sample in a relatively short time. The zone to be sampled can be isolated by matching well screen length to obtain discrete samples of thin aquifers. Use of these sampling techniques will result in more detailed site characterization of sites containing multiple aquifers. By inserting a protected sampling screen in direct contact with soil and with watertight risers, initial well development (Guide D 5521) and purging of wells may not be required for the rst sampling event. Discrete water sampling, combined with knowledge of location and thickness of target aquifers, may better de□ne conditions in thin multiple aquifers than monitoring wells with screened intervals that can intersect and allow for intercommunication of multiple aquifers □□□□□□□**1**□□□□. Direct-push sampling performed without knowledge of the location and thickness of target aquifers can result in sampling of the wrong aquifer or penetration through con□ning beds.

5.2 For sites that allow surface push of the sampling device, discrete water sampling is often performed in conjunction with the cone penetration test (Test Method D 5778) □□□□, which is often used for stratigraphic mapping of aquifers, and to delineate high-permeability zones. In such cases, direct-push water sampling is normally performed close to cone holes. In complex alluvial environments, thin aquifers may vary in continuity such that water sampling devices may not intersect the same layer at equivalent depths as companion cone penetrometer holes.

5.3 Water sampling chambers may be sealed to maintain in situ pressures and to allow for pressure measurements and permeability testing □□□□□**S**□□ Sealing of samples under pressure may reduce the possible volatilization of some organic compounds. Field comparisons may be used to evaluate any systematic errors in sampling equipments and methods. Comparison studies may include the need for pressurizing samples, or the use of vacuum to extract uids more rapidly from low hydraulic conductivity soils (8.1.5.3).

5.4 Degradation of water samples during handling and transport can be reduced if discrete water sampling events with protected screen samplers are combined with real time eld analysis of potential contaminants. In limited studies, researchers have found that the combination of discrete protected screen sampling with onsite eld analytical testing provide accurate data of aquifer water quality conditions at the time of testing □□□□□□□ Direct-push water sampling with exposed screen sampling devices, which may require development or purging, are considered as screening tools depending on precautions that are taken during testing.

5.5 A well screen may be pushed into undisturbed soils at the base of a drill hole and back□lled to make permanent installed monitoring wells. Procedures to complete direct-push wells as permanent installations are similar to those given in Practice D 5092. These procedures allow for permanent sealing of riser pipe in the borehole. Some state or local regulations may not allow for certain types of direct-push installations as permanent monitoring wells depending on the application. Sometimes, where temporary well screens are inserted at the top of the ground water table, sealing an annulus may not be necessary.

5.6 In difficult driving conditions, penetrating to the required depth to ensure sealing of the sampler well screen may not be possible. If the well screen cannot be inserted into the

[5] The boldface numbers in parentheses refer to a list of references at the end of this guide.

soil with an adequate seal, the water-sampling event would require sealing in accordance with Practice D 5092 to isolate the required aquifer. Selection of the appropriate equipment and methods to reach required depth at the site of concern should be made in consultation with experienced operators or manufacturers. If there is no information as to the subsurface conditions, initial explorations consisting of penetration-resistance tests, such as Test Method D 1586, or actual direct-push testing trials can be performed to select the appropriate testing system.

5.6.1 Typical penetration depths for a speci□c equipment con□guration depend on many variables. Some of the variables are the driving system, the diameter of the sampler and riser pipes, and the resistance of the materials.

5.6.2 Certain subsurface conditions may prevent sampler insertion. Penetration is not possible in hard rock and usually not possible in softer rocks such as claystones and shales. Coarse particles such as gravels, cobbles, and boulders may be difficult to penetrate or cause damage to the sampler or riser pipes. Cemented soil zones may be difficult to penetrate depending on the strength and thickness of the layers. If layers are present that prevent direct push from the surface, the rotary or percussion drilling methods (Guides D 5781, D 5782, D 5783, and D 5784, D5785, D5786, and see 2.2) can be employed to advance a boring through impeding layers to reach testing zones.

5.6.3 Driving systems are generally selected based on required testing depths and the materials to be penetrated. For systems using primarily static reaction force to insert the sampler, depth will be limited by the reaction weight of the equipment and penetration resistance of the material. The ability to pull back the rod string is also a consideration. Impact or percussion soil probing has an advantage of reducing the reaction weight required for penetration. Penetration capability in clays may be increased by reducing rod friction by enlarging tips or friction reducers. □owever, over reaming of the hole may increase the possibility of rod buckling and may allow for communication of differing ground-water tables. □and-held equipment is generally used on very shallow investigations, typically less than 5-m depth, but depths on the order of $10^1$ m have been reached in very soft lacustrine clays. Intermediate size driving systems, such as small truck-mounted hydraulic-powered push and impact drivers, typically work within depth ranges from 5 to 30 m, but can reach depths on the order of $10^2$ m. □eavy static-push cone penetrometer vehicles, such as 20-ton trucks, typically work within depth ranges from 15 to 45 m, and also reach depth ranges on the order of $10^2$ m in soft ground conditions. Drilling methods (Guides D 5781, D 5782, D 5783, D 5784, D 5875, D 5876, and also see 2.2) using drilling and incremental sampling are frequently used in all depth ranges and can be used to reach depths on the order of $10^3$ m.

□TE 1□U sers and manufacturers cannot agree on depth ranges for different soil types. Users should consult with experienced producers and manufacturers to determine depth capability for their site conditions.

5.7 Combining multiple-sampling events in a single-sample chamber without decontamination (Practices D 5088) is generally unacceptable. In this application, purging of the chamber should be performed to ensure isolation of the sampling event. Purging should be performed by removing several volumes of □uid until new chemical properties have been stabilized or elements are □ushed with □uid of known chemistry. Purging requirements may depend upon the materials used in the sampler and the sampler design.

## □. □pp□□□□□□

6.1 □*eneral* □ A direct-push sampling system consists of a tip; well screen; chambers, if present; and riser pipes extending to the surface. Direct-push water sampling equipment can be grouped into two classes, either with a sealed protected screen or exposed screen. Samplers with sealed screens depend on the seal to avoid exposure of the sampling interval to soil or water from other layers. They can be considered as accurate point-source detectors. They are normally decontaminated between sampling events. Exposed-screen samplers may require purging and development and as such are considered as screening devices for pro□ling relative degrees of contamination.

6.1.1 □*xposed□□creen □amplers* □ Some direct-push samplers may consist of a simple exposed well screen and riser pipe that allows grab sampling with bailers or pumps. An example of this arrangement is the simple push or well point shown in Fig. 1. □**1**□□□The practice of jetting well points is often not acceptable due to the large quantities of water used for insertion and the resulting potential for disturbance and dilution in the aquifer. If water is used for insertion, knowing the chemical constituents in the water may be necessary. Bias may be possible if an exposed-screen sampler is pushed through multiple contaminated layers. If exposed-screen well points are pushed through predrilled holes the screen and riser may □ll with water present in the drill hole and require purging before sampling.

6.1.1.1 Another form of an exposed-screen sampler has been incorporated into cone penetrometer bodies □□□The cone penetrometers have sample chambers with measurement devices such as temperature and conductivity. Some cone penetrometers have been equipped with pumps for drawing in water samples into sample chambers or to the surface. Samplers equipped with chambers and subjected to multiple sampling events may require purging between sampling events. Although several of these designs have been proposed, they have not been successful in production practice. This is because of lengthy and time consuming purging requirements. In most cases, purging requirements and the depths of testing may be such that single-sampling events without cone penetrometers may be more economical than multiple-sampling events requiring purging.

6.1.2 □*ealed□□creen □amplers* □ Protected well screen and simple riser pipes for grab sampling are also deployed. An example is shown in Fig. 2 □**1**□□□This simple well screen arrangement allows for grab sampling through the riser pipe without purging or development if there is no leakage at the screen seals and riser pipes. Fig. 3 shows a schematic of a direct-push water sampler with a protected screen and with the ability to work in the grab sampling mode or by allowing water to enter a sample chamber in the sampler body □**1**□Most simple sample chambers allow for □ow through the chamber. When □ow through chambered samplers is opened, it is

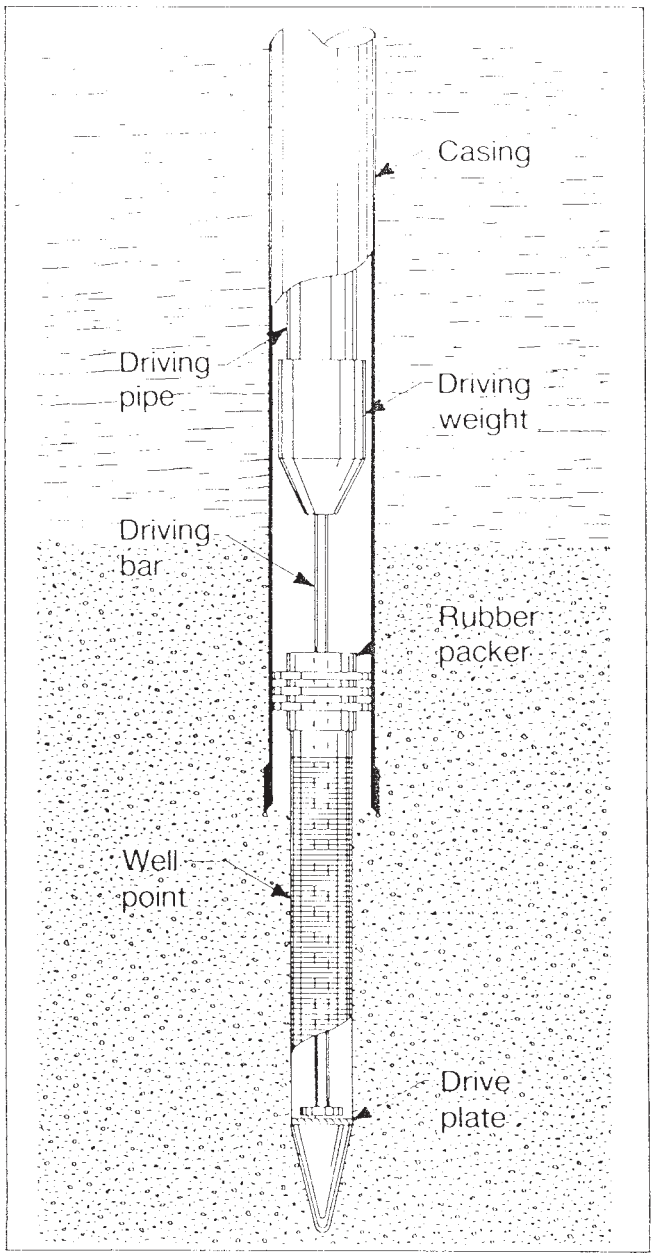


**1 D (12)**

possible that the ground water from the test interval can ll into the rods above the chamber. In those cases, it may be advisable to add water of known chemistry into the rods prior to opening the screen. Some protected-screen samplers have sample chambers designed to reduce volume and pressure changes in the sample to avoid possible volatilization of volatile compounds The need for pressurization is dependent on the requirements of the investigation program and should be evaluated by comparison studies in the eld with simpler systems allowing the sample to equalize at atmospheric pressure. There are different approaches to pressurizing the sample chamber including use of inert gas pressure or using sealed systems. An example of a sealed vial-septum system is shown in Fig. 4 In the sealed vial system, a septum is punctured with a hypodermic needle connected to a sealed vial. With this approach the vial will contain both a liquid and gas at aquifer pressure. The sealed vial-septum system has been used in an exposed-screen mode.

6.1.3 *aterials of anufacture* The choice of materials used in the construction of direct-push water sampling devices should be based on the knowledge of the geochemical environment to be sampled and how the materials may interact with the sample by means of physical, chemical, or biological processes. Due to the nature of insertion of these devices, the sampler body is typically comprised of steel, stainless steel, or metals of other alloys. The type of metal should be selected based on possible interaction effects with the uid to be sampled. Well-screen materials can be selected from a variety of materials. Materials commonly used for well-screen elements include steel, stainless steel, rigid polyvinyl chloride (PVC), polytetra uorethylene (PTFE), polyethylene (PE), polypropylene (PP), and brass. Sample chambers, pumps, and connector lines are also constructed with a variety of materials. Evaluating the possible interaction of materials that will be exposed to the water during the sampling event is important.

6.2 *ampler ody* The sampler body consists of a tip, and a barrel that consists of well screen, a protective sleeve if used, and a sampling chamber if used, with a connector assembly to attach to riser pipes. The sampler is normally constructed of steel to withstand insertion forces. The sampler barrel should be of constant outside diameter to ensure intimate contact with the soil to be tested. Protective sleeves shall be equipped with -rings to prevent the ingress of water before the sampling event.

6.2.1 *xpendable ampler Tips* Some sampler tips are expendable and are left in the ground after the sampling event. The tip should be equipped with an -ring seal to the sampler sleeve to prevent leakage into the riser pipe until the sampling depth is reached.

6.2.1.1 Sampler tips are designed so that upon pull back of the sampler body and riser pipe, the tip is disconnected from the sampler. The required diameter, and the ability to expend the tip successfully, depends on the soils to be penetrated. The tip diameter can be set equal to, or slightly less than, the sampler body. If there are problems with tip retraction, tips can be designed with a diameter of 1 to 3 mm ($\frac{1}{8}$ to $\frac{1}{16}$ in.) larger than the sampler body. The use of an enlarged diameter with a larger shoulder or tip may help in reaching greater depths because it acts as a friction reducer. An enlarged tip should not leave too large an annulus above the sampler body and riser pipes as to maintain a seal above the well screen and to prevent potential cross contamination.

6.2.1.2 Most sampler tips are made of steel to withstand pushing forces. With some samplers, after the sampling event, the tip may remain in the ground and the hole may be grouted. The user should consider if leaving the tips below the ground will adversely affect surrounding ground-water chemistry depending on site conditions.

6.2.2 *ell creen* Many materials for well screens are available for direct-push samplers. The material of manufacture should be selected with consideration of chemical composition of the ground water to be sampled and possible

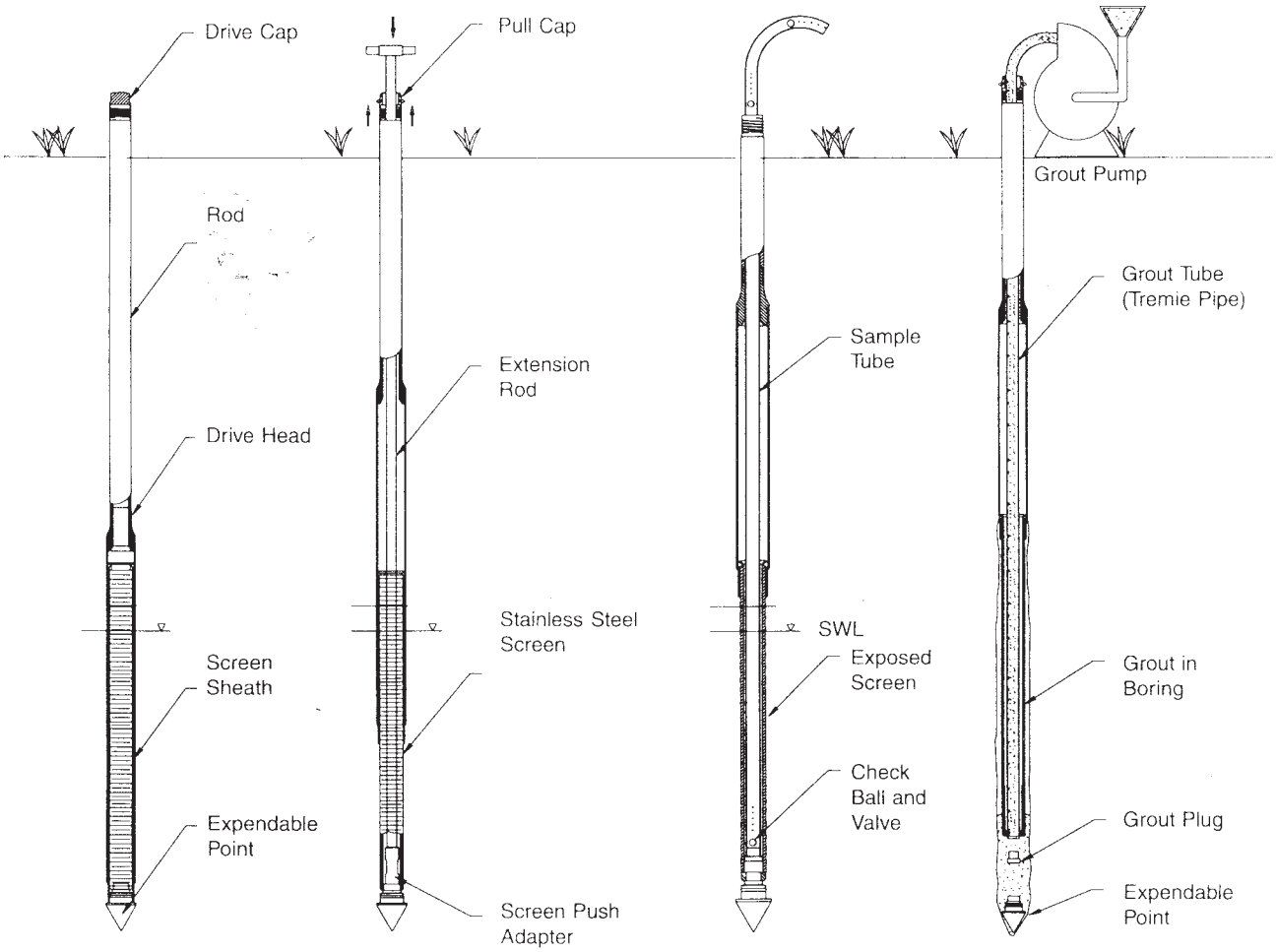


□□□ □**2** □□□ □□□ □□□□□□□□□ □□□□□□ □□□ □□□□(**1**□)

interactive effects (see 6.1.3). Some samplers use simple mill slotted steel, or PVC tube. Steel or brass screen formed into a cylinder can be used to cover inlets. Continuous-wrapped, wire-wound well points are also commonly used. The effective opening size of the well screen material should be selected based on the material to be sampled, the time required to sample, and soil sediment that can be tolerated in the water sample. Methods to size well-screen and lter-pack materials are given in Practice D 5092. Clean sands and gravels can be sampled with a screen with larger openings without producing excessive sediment. Clayey and silty soils containing nes may require ner openings. Typical openings of 10 to 60 m are used. Finer openings will reduce sediment but may also slow ingress of uid.

6.2.3 Some sampler inlets are not protected by well screen or slotting. The simplest form of sampler can be an open riser pipe with an expendable tip. The use of unprotected inlets has sometimes been useful to sample ground water at soil□bedrock interface. If unprotected inlets are used, one must consider the amount of soil sediment that can be tolerated in the sample.

6.3 □*iser □ipes* Also commonly referred to as □push rods□ or extension rods□, riser pipes are normally constructed of steel to withstand pushing forces. Some temporary well-point installations may use a double-tube system such as a small-diameter PVC riser pushed by the steel tube (Fig. 5) □**1**□□ Double-tube systems are advantageous if multiple sampling events are required in a single push. ther temporary systems may use a exible tubing system connected to the well point (Fig. 6) □**1**□□For PVC riser pushed with outside steel tubing, the withdrawal of steel push rods will leave a small annulus between the soil and PVC riser or tubing. This annulus may require grouting depending on the effective seal above the well screen and the possibility of cross contamination of overlying layers. Cone penetrometer rods as speci□ed in Test Method D 5778 are sometimes used in sampling systems deployed with cone penetrometer equipment. arger diameter rods, typically 45 mm (1.75 in.), are sometimes used with cone penetrometer equipment. The maximum rod diameter that can be used depends on the material to be penetrated and the driving system. Increased rod diameter causes increase in the required

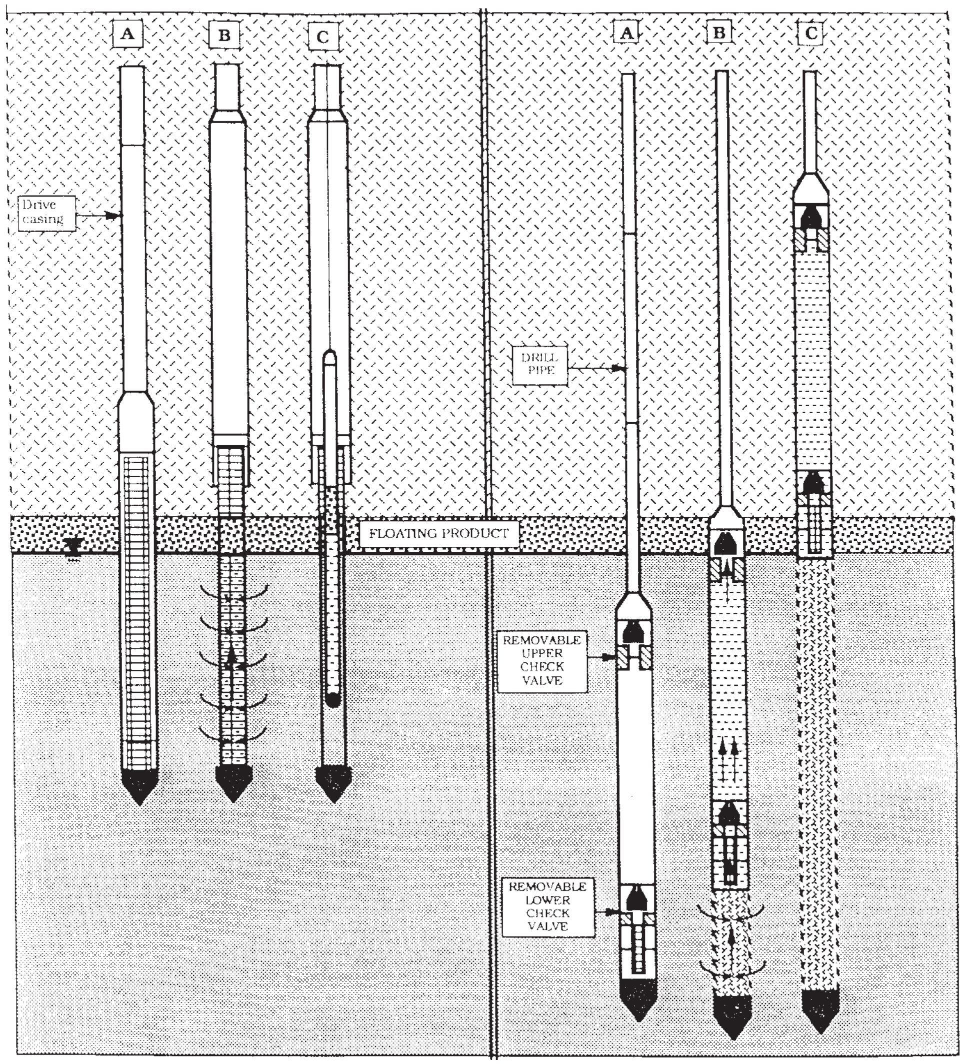


A Penetrometer closed while being driven into position.
B Tool opened and 5 foot screen telescopes into position for collection of hydrocarbon or water sample at the very top of the aquifer.
C Hydrocarbon sample being collected using bailer lowered through drive casing.

A Penetrometer closed while being driven into position.
B Cone separated and tool open to collect sample.
C Check valves closed as sample is retrieved within body of the tool.

(1)

driving force required to penetrate a sufficient distance. Most surface direct-push riser pipes are less than 50 mm (2 in.) in diameter.

6.4 Standard drilling rods used for rotary drilling are normally used when sampling is done at the base of drill holes. Many drill rods are available (see Guides D 5781, D 5782, D 5783, D 5784, D 5875, D 5876, and also see 2.2). For direct-push sampling systems that depend on the riser pipe for grab sampling within the riser, ensuring that joints are watertight will be necessary such that water enters through the well screen interval to be sampled. Rods should be wrench-tightened, and PFTE tape can be used on the threads to stop leakage. The quality checks discussed in Section 8 can be performed to evaluate possible leakage. Sometimes it may be necessary to equip rod joint shoulders with O-rings to prevent leakage. Cone penetrometer rods with precision tapered threads are normally watertight during short sampling events lasting up to 1 h if they are not damaged.

6.4.1 *Friction Reducers*—Friction reducers that have enlarged outside diameters of the riser pipe are sometimes employed to reduce thrust capacity needed to advance the well point or sampler. If friction reducers are used, they must be a sufficient distance above the sampling location to ensure that fluids from overlying layers can enter the sampling zone. If cross-contamination is possible, use of friction reducers should be avoided. In some cases the use of friction reducers can help in forming an annular seal. Donut-type reducers ream the hole smoothly. Lug-type reducers rip and remold the soil and may provide a better annular seal. The type and location of friction reducers should be documented in the project report.

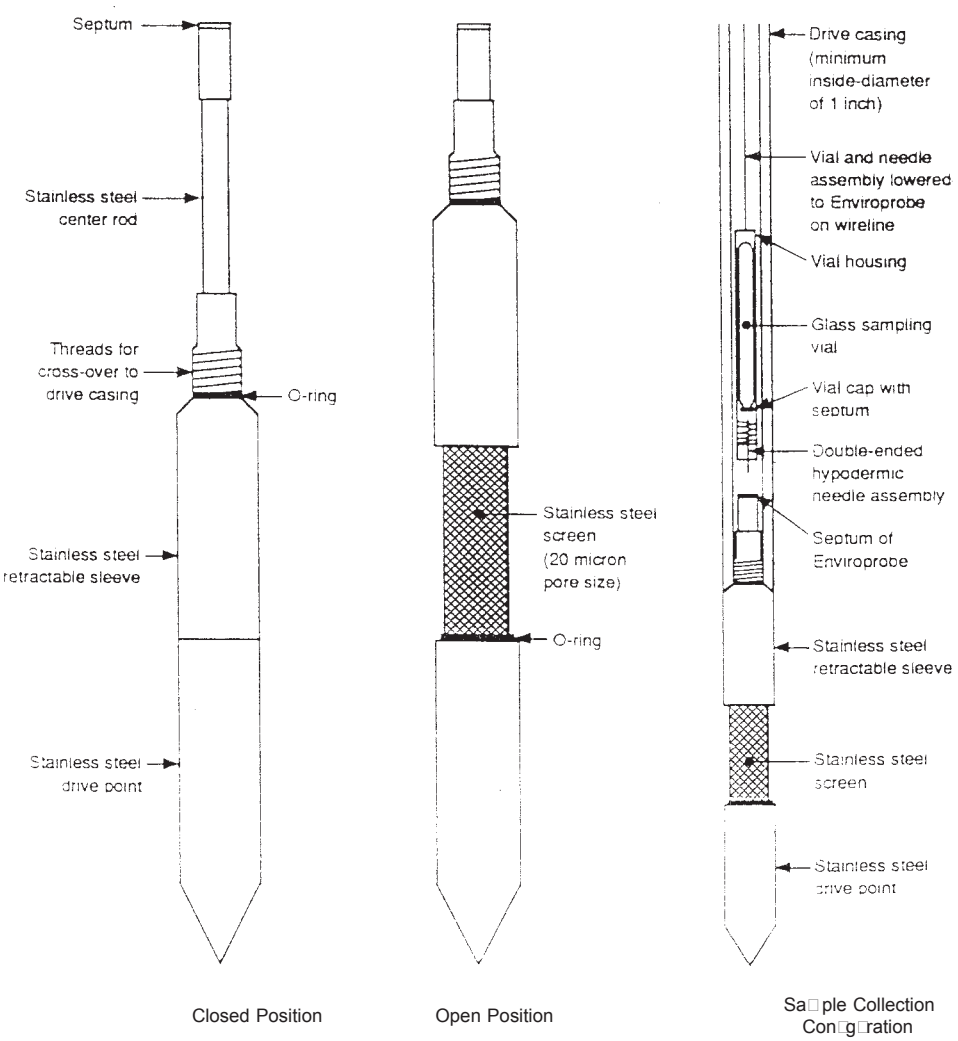


□□□□□ □□□□□□□□□□ □□□□□□ □□□ □□□□□□□□ □□□□□□ □□□□□□□□□□ (□)

6.4.2 □*ud Injection* Some direct-push systems inject betonite drill uid along the drill rods to reduce friction. These systems normally inject the uid behind friction reducers. These systems may provide better sealing above the sampler for the sampling process but are also more difficult to operate.

6.5 □*ampling □e□ices* Methods to obtain water samples vary widely. Examples are given in 6.1.1 and 6.1.2. Simple grab samplers, most often bailers, are used with simpler systems. ther systems draw water into chambers or sealed vials for retrieval to the surface. Some systems may have pumps and circulation systems to retrieve samples to the surface. The materials of manufacture of samplers, sample containers, pumps, and circulation lines should be selected considering possible interaction effects discussed in 6.1.3. Selection of devices for sampling ground water is presented in Guide D 4448. Sampling methods and devices should be selected based on the potential impact on sample integrity as addressed in 6.1.3 and other areas in Guide D 4448.

6.6 □*ample □ontainers* Sample containers for sampling ground water are addressed in Guide D 4448.

6.7 □*ri□ing or □ushing □□uipment* Soil probing (percussion driving) systems, penetrometer systems, and rotary drilling equipment are used for inserting direct-push water sampling devices. The equipment should be capable of applying sufficient mechanical force or have sufficient reaction weight, or both, to advance the sampler or screen to a sufficient depth to ensure an effective seal above the area to be sampled. The advancement system must also have sufficient retraction force to remove the rods, which is often a more difficult task than advancing the rods. Simple advancement systems include hand-held rotary-impact hammers with mechanical-extraction jacks. Many systems use hydraulic- or vibratory-impact hammers operating at high frequency to drive rods into the sampling interval. Reaction force can be reduced if impact hammers are employed. Multipurpose driving systems such as those commonly deployed for soil gas sampling (Guide D 5314) are frequently used in shallow explorations. Some vibratory drilling systems can provide vibration to the rods and easily penetrate cohesionless soils. n soft ground sites, cone penetrometer systems use hydraulic rams to push the sampler and riser pipe into the ground. Conventional rotary drilling rigs can use either hydraulic pull-down capability or hammers to drive the sampler to the required depth. Rotary drilling rigs are often used with the incremental drilling and sampling method.

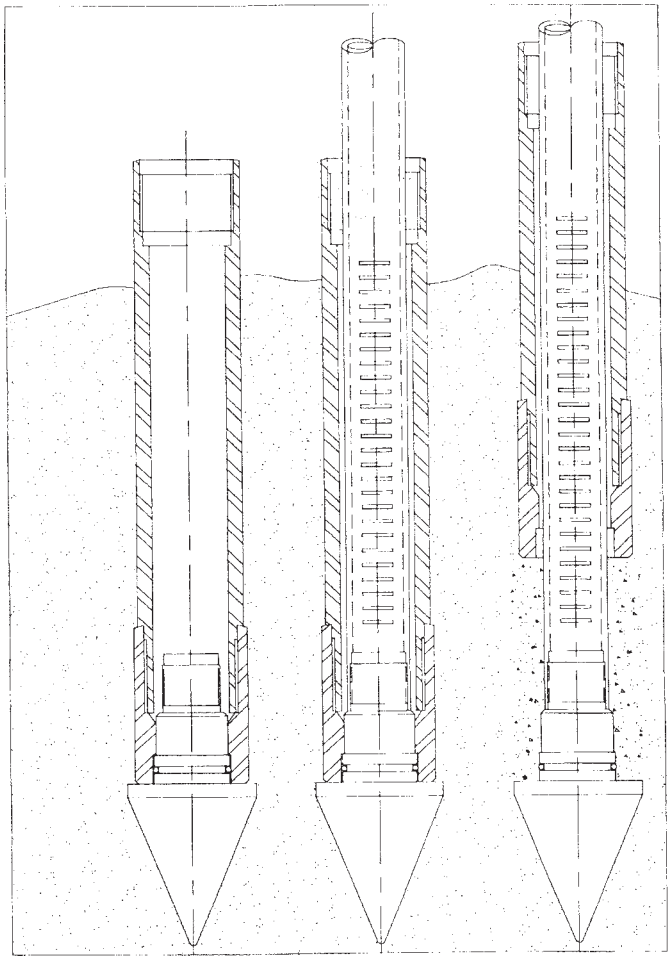

□□□ □□ D□□□□□□□□□ □□□ □□□□□□ □ □□□□□□□□□□□□□ (1□)

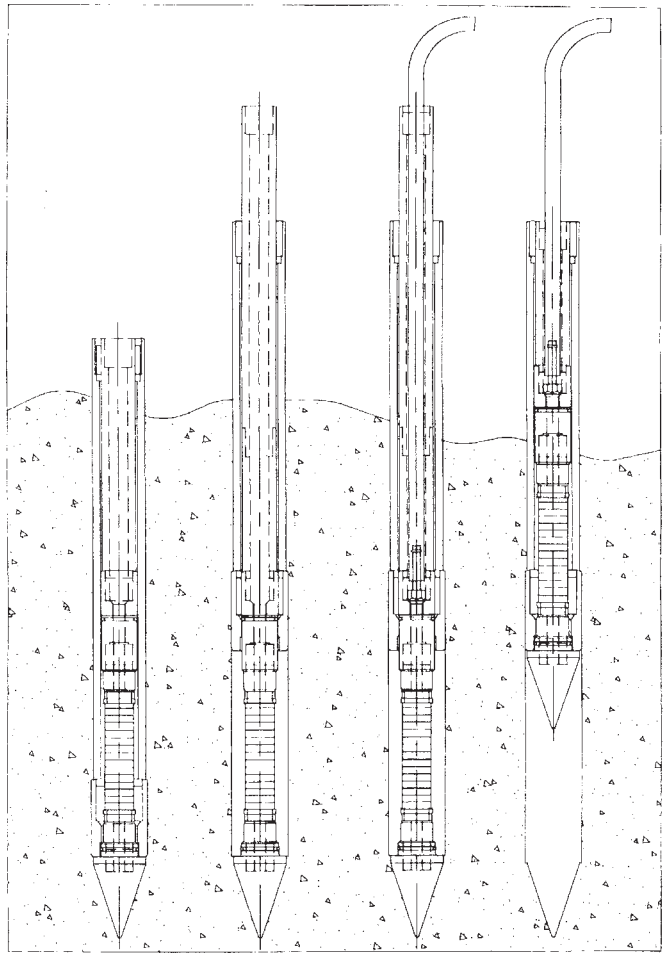

□□□ □6 □□□□□□□□□ □□□□□□ □□□ □□□□□□□□ □□□ □□□ □□□□□□ (1□)

A140-lb SPT hammer (Test Method D 1586) is available on most rotary drilling rigs and can be used to advance the sampler. Use of impact or vibration may allow for penetration of harder soils. If a signi□cant length of rods whip during driving, they should be restrained to prevent damaging of the annular seal at the base of a borehole from lateral movement.

## □. □o□□□□o□□□□

7.1 □*econtamination* Sampling equipment that contacts ground water to be sampled before and after the sampling event may require decontamination. Decontamination should be performed following the procedures outlined in Practices D 5088 and the site-sampling plan. The sampler body normally requires complete decontamination before sampling. Well-screen components are sometimes expendable. ewly manufactured screens and sampler components may contain residues from manufacture and should be cleaned before the sampling event. Riser pipes should be decontaminated if grab sampling will be performed within the tube.

7.2 □*urging* For exposed-screen sampling devices and sampling systems open to overlying ground water, purging may be required before the sampling event. With both protected- and exposed-screen samplers, purging may be required if ground water from overlying sources in□ltrates into the riser pipes into the sampling area. Purging should consist of removal of overlying ground water from the sampling system prior to the sampling event. Purging requirements are outlined in Guide D 4448.

## □. □□oce□□□e

8.1 Two procedures are outlined depending on whether the sampling device is pushed directly from the surface or whether drilling is used to advance an open hole close to the sampling interval. In either event, the sampling screen should be advanced into undisturbed soil a sufficient distance to ensure that the sampling depth cannot be exposed to overlying ground water, if present.

8.1.1 *Incremental □rilling and □ampling*□In this method, advance a drill hole close to the sampling interval using drilling methods listed in 2.2. f the drilling methods listed, the most commonly employed is rotary hollow-stem auger drilling because uids are not introduced during the drilling process. If a rotary drilling method using drilling uid or air is employed, the impact of the uid or air to the sample quality and quality of the surrounding aquifer should be considered. If caving or sloughing occurs the use of protective casings may be required.

8.1.1.1 Stabilize the drill rig and erect the drill rig mast. Establish and document a datum for measuring hole depth. This datum may consist of a stake driven into a stable ground surface, the top of the surface casing, or the drilling deck. Do

not use surface casing as a datum if it is subject to movement. If the hole is to be later surveyed for elevation, record and report the elevation difference between the datum and the ground surface. Proceed with drilling until a depth is reached above the target sampling interval. Check and document the depth of the borehole and condition of the base of the hole. Establish the depth and condition of the base of the boring by resting the sampler at the base of the boring and checking depth to the sampler tip. If casing is used and heave occurs into the casing, remove this material and advance the hole deeper. eave of soil into the casing may make it impossible to drive the well point without it carrying the casing along with the well point or sampler. If excessive heave, caving, or sloughing of soil occurs, consider using an alternative drilling method capable of maintaining stable soil conditions.

8.1.2 If the sampling event is to occur at the ground-water table and equipment depends on a dry-hole condition, that is, an exposed screen sampler with no purging requirements, test the drill hole to con rm that ground water has not entered the hole. Water levels can be determined using Test Method D 4750.

8.1.3 Attach the well point or sampler to riser pipes and lower into the borehole. Carefully record the assembly length as rod sections are added to the assembly. Centralizers may be used to maintain verticality of the assembly and to reduce rod whip. Rest the assembly on the base of the borehole. Determine and record the depth to the tip of the assembly.

8.1.4 Either push or drive the well point or sampler a sufficient distance below the base of the boring. This distance should be at least 1 m (3 ft), or the minimum to ensure an effective seal. For protected-screen samplers where a protective screen is exposed by pulling back the riser pipe, the withdrawal action may shear or crack soil, allowing connection to the base of the borehole. In these cases, adjust the insertion and retraction lengths according to soil conditions. In general, the sampler should be inserted at least three times the effective screen length from retraction. To check the seal in uid lled holes, tracers can be introduced into the uid in the base of the borehole. Document the nal depth of insertion to the tip of the sampler and midpoint of the well screen. If the sampler is driven with hammer blows, accomplish the penetration without excessive vibrations that could reduce the effective seal of the riser pipe above the well screen. ormally, if smooth penetration is accomplished with each hammer blow, the seal should be intact.

8.1.4.1 The process of jetting well points is not preferred because of the addition of water, disturbance to the sampling zone, and lack of an effective seal above the screen. These installations are usually intended for permanent installations with the drill hole completed as a monitoring well. If jetting is used, document the approximate volume and chemical quality of water.

8.1.5 *ampling* The sampling process depends on the type of the sampling equipment used, that is, exposed- or protected-screen samplers.

8.1.5.1 *ampling of xposed creen amplers* Exposed-screen samplers can be sampled after uids have been purged from the screen and riser pipes. Purge these systems in accordance with Guide D 4448.

8.1.5.2 *ampling of rotected creen amplers* Test protected-screen samplers that are open to the surface through the riser for grab sampling for system leakage before exposing the screen for sampling. Before screen exposure, test the riser for presence of water that may have leaked through joints and connections using Test Method D 4750. If water is present from unknown sources, this should be noted and either purging or abandoning of the test should be considered. After quality checks for leakage, the riser pipes may be pulled or twisted to expose the well screen to the aquifer.

8.1.5.3 Several methods for sampling water are available. If the sampling device uses head pressure available in the aquifer, sufficient time should be allowed for water to ll the sampling chamber or riser pipes. Some systems allow for connection of a sealed sampling chamber, or tubing, to a port in the sampler body after the screen is opened, allowing direct connections to the screened sampling area. By using these systems, one may avoid the necessity to check inside the riser pipes for leakage water. Use of sampling pumps to draw in the sample may be allowed, but consideration should be given the changes in ambient pressures and temperatures that may change chemical compositions. With an open tube well screen using grab sampling in low permeability soils, a vacuum is sometimes applied to the top of the riser pipe to accelerate ground-water in ow. The use of a vacuum and its effect on chemical composition should be considered and evaluated if site requirements dictate.

8.1.5.4 After a sufficient volume of the sample is obtained, place the samples in suitable containers for analysis. The volume of a sample to obtain depends on the chemical composition of ground water, testing protocols, and the data-quality objectives. Depending on the screen used, samples may contain sediment and may require ltering before placement of samples in containers. Certain testing procedures or regulations may require ltration of water samples.

8.1.6 After sampling, either retrieve the sampler or leave it in place for permanent installation in accordance with Practice D 5092. Some retrievable samplers leave a tip or a well screen element, or both, below the bottom of the boring. If repeated sampling events are to be performed in the same drill hole, drilling it through these pieces if present will be necessary. Depending on the drilling method, a pilot bit should be reinserted in the drill string and drilling continued to a depth exceeding the depth of the previous sampling event. ormally tips or screens, or both, will be moved to the side of the drill hole before the next sampling event. Sometimes the presence of a tip or element, or both, can be detected by drilling action. If drilling action detects these pieces, note the location. Drilling continues to the next depth of concern and sampling may be repeated. The depth of the extended drill hole should equal or exceed the depth to the sampling tip of the previous interval.

8.1.7 After the drilling is completed, the drill hole should be completed following guidelines in drilling methods (Guides D 5781, D 5782, D 5783, D 5784, D 5875, D 5876, and also see 2.2) or those given in Section 9.

8.2 *□irect □ush from the □urface* Well points and samplers may be advanced directly from the surface with multipurpose percussion driving systems, hand-held rotary percussion drills, cone penetrometer systems, or any other systems capable of supplying sufficient force to reach the depths of concern.

8.2.1 Stabilize and level the rig for testing. For some tire-mounted equipment, the rig can be raised off the ground and leveled with hydraulic rams to lift the rig from the tires to avoid shifting during difficult driving conditions. Establish and document a datum for measuring hole depth. If the hole is to be later surveyed for elevation, record and report the height of the datum to the ground surface.

8.2.2 The sampler body is connected to riser pipes along with any subassemblies such as friction reducers. Prior to driving, measure the length of the sampler assembly and riser pipes to determine the depth of sampling. Some temporary well systems drive a double tube or cased system, where riser pipe and casing are added as it is advanced. This allows for easy annulus grouting as the casing is retracted. The rods are then pushed using smooth quasi static push or impacts, or both. Additional riser pipes are added as pushing progresses. As driving progresses, operators should carefully record the rods added to ensure that sampling occurs at the correct depth.

8.2.3 *□ampling of □xposed□□creen □amplers* Use the same procedures in accordance with 8.1.5.1.

8.2.3.1 *□ampling of □rotected□□creen □amplers* Use the procedure in accordance with 8.1.5.2 with the addition that the riser pipes should be periodically checked for leakage using Test Method D 4750.

8.2.4 After sufficient volume of a sample is procured, place the samples in suitable containers for analysis. The volume of the sample to obtain depends on the chemical composition of ground water, testing protocols, and the data-quality objectives. Depending on the screen used, samples may contain sediment and may require ltering before placement of samples in containers.

8.3 After sampling, the sampler is either retrieved or left in place for permanent installation (Section 9). Some retrievable samplers leave a tip or a well-screen element, or both, at the bottom of the sounding. If repeated sampling events are to be done in the same hole, they must be done with samplers pushed to greater depths.

8.4 After the testing is nished, complete the borehole following the guidelines in Section 9.

## □. □o□p□e□o□ □□□ □□□□□o□□ e□□

9.1 *□ermanent or Temporary □ell Installations* Wells inserted by either drilling methods or direct push from the surface may be left in the ground as permanent or temporary installations. Some state or local regulations may not allow for certain types of direct-push installations as permanent monitoring wells depending on the application. If there are questions as to the performance of direct-push wells, they can be compared to wells installed using rotary drilling methods (Guides D 5781, D 5782, D 5783, and D 5784, D5875, D5876, and also see 2.2) in accordance with Practice D 5092. For wells inserted in drill holes, the drill hole will require completion with sealing materials to ensure a seal between the hole wall and riser pipes. Sealing procedures are given Practice D 5092.

9.1.1 For wells installed by direct push from the surface, the need for sealing depends on the size of the annulus, ground-water quality, and the ability for cross-contaminating or accelerating contamination movements among aquifer(s). Temporary well points installed into the top of the rst ground-water layer may only require surface sealing. If the annulus is very small, soil cave and squeeze may reduce effective vertical hydraulic conductivity. If the well riser intersects perched aquifers, cross-communication of aquifers may be possible if too large an annulus is left open. Communication can be evaluated by performing tracer tests, if necessary. Friction reducers used on cone penetrometer equipments may only increase hole diameters by 6 to 13 mm ($^1/_4$ to $^1/_2$ in.) of that of the steel pipes for pushing.

9.2 *□ther □ompletion □ethods* Depending on the requirements of the investigation, performing special completions with protective casings or other sealing may be necessary. For holes using rotary drilling methods and incremental sampling, the hole could be completed as a monitoring well (Practice D 5092) or with grouted casings for other testing such as geophysical tests. Several methods are available for grouting of casings. Using injection grouting where injection is done at the base of the boring is most desirable and grouts are pumped up the annulus until they reach the surface showing a continuous seal.

9.3 *□ole □bandonment* For test holes where there are no installations or other completion methods, the hole should be abandoned following program requirements. The need for and the method of sealing for abandonment depends on state and local regulations, site conditions, ground-water quality, and the ability for cross-contaminating or accelerating contamination movements among aquifer(s).

9.3.1 arge-diameter drill holes from rotary drill operation often require sealing. State, federal, and local regulations may dictate abandonment requirements for boreholes intersecting the water table.

9.3.1.1 The need for sealing of holes is also dependent on geohydrologic conditions. If the hole intersects the top of the rst ground-water table, complete sealing may not be required. Under a homogeneous single aquifer system, where there are no perched water table or artesian conditions, there will be little hydraulic gradient to move potential contaminants at differing elevations. The worst case for possible cross-communication of aquifers occurs under perched or con□ned ground-water conditions.

9.3.1.2 In most cases, direct-push holes intersecting ground-water tables will require complete sealing. In cases where the hole is to be back□lled completely, the condition of the hole should be evaluated and documented. Any zones of caving or blocking which preclude complete sealing should be documented. Displacement grouting may displace ground water from the hole to the surface. If this water is considered contaminated then provisions must be made to collect these uids at the surface. A minimum requirement for sealing

should be that the surface of the hole is sealed to prevent hazards to those at the surface and to eliminate direct movement of surface contaminants to the water table through the hole.

9.3.2 *Completion of Drill Holes*—Completion of boreholes using drilling methods are addressed in Guides D 5781, D 5782, D 5783, D 5784, D 5875, D 5876, and also see 2.2.

9.3.3 *Completion of Surface Direct-Push Holes*—Several methods have been used successfully for sealing or grouting of surface direct-push holes (**1**). The method of grouting depends on the types of equipment deployed and the subsurface conditions encountered.

9.3.3.1 One method of grouting is retraction grouting directly through the sampler tip or friction reducer as the sampler is withdrawn after the sampling event. Tip retraction grouting is normally performed through small diameter tubes and a knockoff tip. Tip retraction grouting is the least frequently used due to difficulty in pumping grout mixtures without significant head loss through the tubing. Cement grouts for tip retraction grouting may require higher water content or additives to reduce viscosity.

9.3.3.2 Retraction grouting is sometimes performed through grouting points above the sampler tip. This is normally accomplished using an enlarged diameter grouting port above the sampler as shown in Fig. 7.

9.3.3.3 Reentry grouting may have an advantage of freeing pushing equipments for production while grouting operations follow. Reentry grouting allows temporary connection of aquifers between the removal and reinsertion process but is normally acceptable if grouting follows promptly minimizing exposure. The selection of retraction or reentry grouting is an economic decision and it depends on site conditions and depth of soundings.

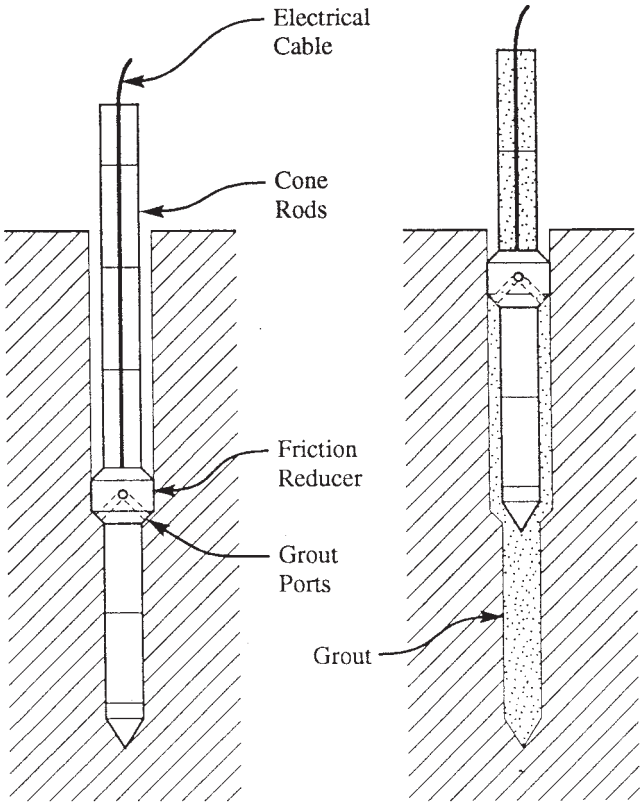


(a) Installation (b) Grouting

FIG. 8 Direct-Push Grouting Equipment (1)

9.3.3.4 In reentry grouting, Fig. 8 and Fig. 9, the test string is completely withdrawn from the hole and a secondary grouting tube or tubing is reinserted to the complete depth of the hole. If the hole remains open after retraction of the test string, inserting flexible tubing or small-diameter PVC into the hole by hand directly after testing may be possible. In this case, reinserting the grout line is desirable close to the original depth of the hole. In some cases, depending on project needs, locations of water bearing strata, and soil stratigraphy, it may be acceptable if the grout line does not reach the bottom of the hole.

9.3.3.5 Usually, with squeezing clays or caving sands, reaction equipment may be required to push rigid tubing of steel or plastic with a sacrificial or grouting tip to the complete depth of the hole (Fig. 8 and Fig. 9). The reentry string should follow the original hole alignment because it is the path of least resistance. If deviation is suspected, it should be reported. If a knockoff tip is to be retracted in high hydraulic conductivity sands it may be necessary to add grout into rods prior to tip retraction to avoid water filling the rods. Grout is then pumped through the hole until it rises to the surface, or tremie grouting is performed by maintaining a grout column in the rods as they are removed. Grouting is continued to maintain a full hole as tubing is withdrawn. The simplest method of sealing a direct-push hole in stable materials is to place dry materials by pouring or placing directly into the open hole after testing. This method is normally only acceptable in stable clay soils where the hole remains open after testing. This method is not acceptable if there are zones of hole caving or squeezing or there is appreciable presence of ground water in the hole. The holes can be probed with small-diameter rods to evaluate these conditions. Smalldiameter granular bentonite is normally used in this application.

9.3.3.6 Direct-push water sampling holes can be grouted with either cement or bentonite grouts. The grout consistency may have to be wetter than standard mixes used for sealing boreholes (Practice D 5092). There has been no research to confirm the best proportions. A typical mixture is 1 sack of Portland cement to 19 to 22 L (5 to 8 gal) of water. Bentonite is added in a small percentage, 2 to 5 %, to reduce shrinkage. Typical bentonite-based mixtures consist of 22.7 kg of dry powered bentonite to 50 to 200 L (24 to 55 gal) of water. It is difficult to mix dry high-yield bentonite without good circulation equipment and time to allow for mixing and hydration. Pre-hydrated bentonite is easier to mix. Some bentonites contain additives that may not be acceptable for grouting use and the user should check with regulators to ensure sealing products are acceptable.

9.3.3.7 Record the volumes of grout injected and compare them with theoretical hole volumes. Often the grouting pressure at depth is unknown due to head losses through pipes, grout tubing, and connections. Pressure grouting equipments should at a minimum include a pressure gage at the surface. To

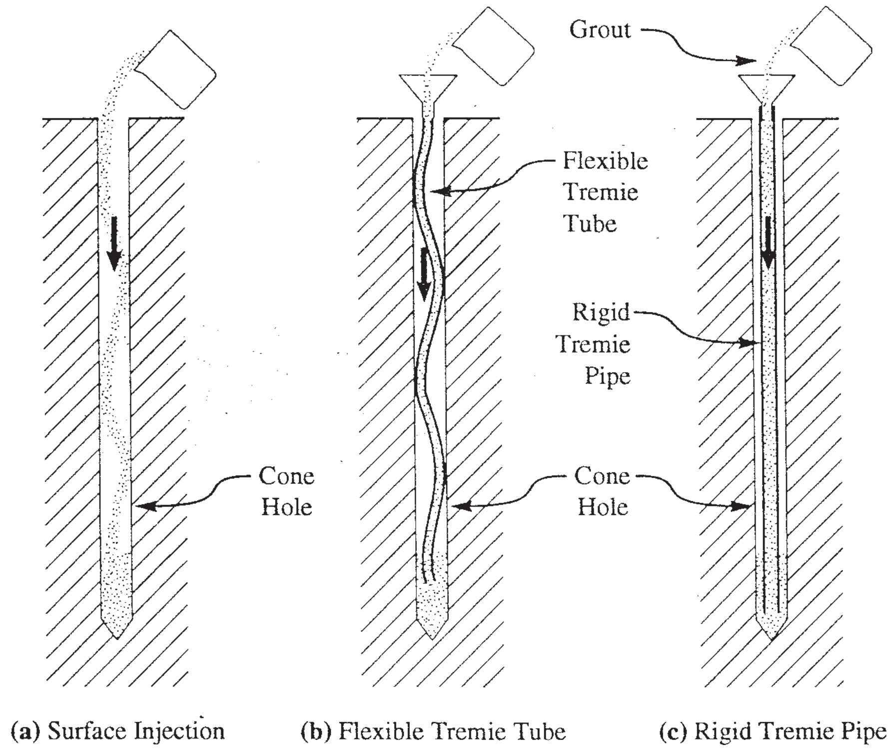


FIG. 8 [illegible] (1[illegible])

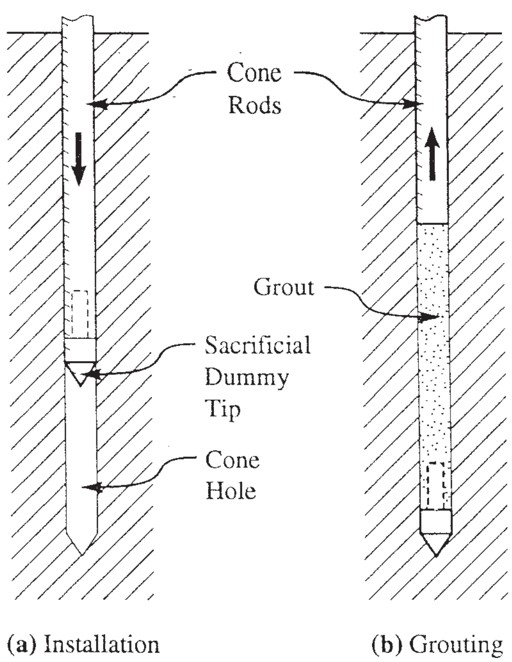


FIG. 9 [illegible] (1[illegible])

avoid excessive hydraulic fracturing of the units, downhole pressures should be restricted to ½ psi per foot of hole depth. Record any unusual changes in grouting pressures that may suggest the presence of obstructions, caved zones, or occurrence of fracturing.

## 10. Field Report and Project Control

10.1 Report information recommended in Guide D 5434 and identified as necessary and pertinent to the needs of the exploration program. Information is normally required for the project, exploration type and execution, drilling equipment and methods, subsurface conditions encountered, ground-water conditions, sampling events, and installations. Some of the data collected during these investigations may be reported as data elements for describing ground-water sites (Practice D 5254, and Guide D 5474).

10.2 Other information besides that mentioned in Guide D 5434 should be considered if deemed appropriate and necessary to the needs of the exploration program. Additional information should be considered as follows:

10.2.1 *Drilling Methods*—If rotary drilling methods are used for predrilling holes, report information particular to the drilling methods as outlined in Guides D 5781, D 5782, D 5783, D 5784, D 5875, D 5876 , and also see 2.2.

10.2.2 *Percussion Driving and Penetrometer Equipment*—For equipment used for surface direct push, report the equipment type, make, model, and manufacturers. Report conditions during push of the sampler such as the occurrence of hard layers. Report datums established for monitoring depth of penetration. For combined cone penetrometers and water-sampling devices, report cone-penetration information in accordance with Test Methods D 3441 and D 5778.

10.3 *Sampling*:

10.3.1 *Equipment*—Report the types of sampling equipment used including materials of manufacture of the components. Provide dimensions of the equipment including outside diameter, screen length and diameter, and friction reducers. Report methods for cleaning of the equipment before and after sampling. Note materials left in the hole or discarded between sampling events. Report any purging or development actions taken before the sampling event.

10.3.2 When water sampling is performed at the base of the borehole, report the condition of the base of the hole before sampling, and report any slough or cuttings present in the recovered sample.

10.3.3 During insertion of the sampler or well point, note any difficulties in advancing the point and retraction of a protective sleeve. Report the retraction distance for protected-screen samplers. If the sampler cannot be advanced more than the minimum required distance of the sampler given in 8.1.4, report the distance driven. ote and record sampling depths including depths to the tip and midpoint of the well screen. ote any unusual occurrence during sampling such as uid exposure, or evidence of cross-contamination contained in the samples recovered. ote and record the volume of the sample taken and other sample handling and preservation methods taken.

10.3.4 Report any measurements of water samples routinely performed in the eld. These measurements may include temperature, P , and conductivity. Report methods of testing, calibrations, and equipment used.

10.4 *ompletion and Installations* A description of completion materials and methods of placement, approximate volumes placed, intervals of placement, methods of con rming placement, and areas of difficulty or unusual occurrences.

## 11. ec o

11.1 The precision and bias of this method have not been established. Due to variability of subsurface conditions, comparative studies of differing approaches to direct-push sampling have not been statistically signi cant, because site spatial variability exceeded differences between methods . Comparisons between water samples obtained from direct-push samples and standard-monitoring wells have been favorable [11]. Additional studies are needed and are actively pursued by Subcommittee D18.21.

## 1 . e o

12.1 direct-push; water sampling; well point

## S


(1) Cordry, ., Ground Water Sampling Without Wells, *roceedings of the National ater ell ssociation ixth National ymposium on uifer estoration and round ater onitoring*, May 19 22, 1986, Columbus, , pp. 262 271.

( ) Zemo, D., et al, Cone Penetrometer Testing and Discrete-Depth Groundwater Sampling Techniques: A Cost Effective Method of Site Characterization in a Multiple Aquifer Setting, *roceedings of the National round ater ssociation*, utdoor Action Conference, May 11 13, 1992, as Vegas, V, pp. 299 313.

( ) Smolley, M., and appemyer, J., Cone Penetrometer Tests and ydropunch™ Sampling An Alternative to Monitoring Wells for Plume Detection, *roceedings of the azmacon 1 onference*, April 18 20, 1989, Santa Clara, CA, pp. 71 80.

( ) Berzins, . A., Use of the Cone Penetration Test and BAT Groundwater Monitoring System to Assess De ciencies in Monitoring Well Data, *roceedings of the National round ater ssociation ut door ction onference*, 1992, pp. 327 341.

( ) Strutynsky, A., and Bergen, C., Use of Piezometric Cone Penetration Testing and Penetrometer Groundwater Sampling for Volatile rganic Contaminant Plume Detection, *roceedings of the National ater ell ssociation etroleum ydrocarbons onference*, ct. 31 ov. 2, 1990, ouston, T , pp. 71 84.

( ) Woeller, D. J., Weemees, I., okan, M., Jolly, G., and Robertson, P. ., Penetration Testing for Groundwater Contaminants, *eotech nical ngineering ongress pecial Technical ublication*, June 1991.

( ) lopp, R. A., Petsonk, A. M., and Torstensson, In-Situ Penetration Testing for Delineation of Ground Water Contaminant Plumes, *roceedings of the Third National utdoor ction onference on uifer estoration round ater onitoring and eophysical ethods*, May 22 25, 1989, ational Ground Water Association, Dublin, , pp. 329 343.

( ) Campanella, R. G., Davies, M. P., Boyd, T. J., and Everard, J. ., In-Situ Teating Methods for Groundwater Contamination Studies, *e elopments in eotechnical ngineering*, Balasubramaniam et al (eds), Balkema, Rotterdam, pp. 371 379.

( ) Zemo, D. A., Pierce, . G., Gallinatti, J. D., Cone Penetrometer Testing and Discrete-Depth Ground Water Sampling Techniques: A Cost Effective Method of Site Characterization in a Multiple Aquifer Setting, *round ater onitoring e iew*, Fall 1994, ational Ground Water Association, Dublin, , pp. 176 182.

(1 ) Eckard, T. ., Millison, D., Muller, J., Vander Velde, E., and Bowallius, R. U., Vertical Ground Water Monitoring Using the BAT Groundwater Monitoring System, *roceedings of the Third National utdoor ction onference on uifer estoration round ater onitoring and eophysical ethods*, May 22 25, 1989, ational Ground Water Association, Dublin, , pp. 313 327.

(11) Church, P. E., and Gvanato, G. E., Bias in Ground-Water Data Caused by Well Bore Flow in ong Screen Wells, *round ater*, March April 1996, Ground Water Publishing, Columbus, , 1996, pp. 262 273.

(1 ) Driscoll, F. G., *roundwater and ells*, Johnson Filtration Systems Inc., St. Paul, M , 55112, 1986.

(1 ) *eoprobe creen oint round ater ampler tandard perating rocedure Technical ulletin No.* , Geoprobe Systems, April 1994.

(1 ) Schematic Drawings Courtesy of Diedrich Drilling Inc., aPorte, I .

(1 ) utennegger, A. J., and DeGroot, D. J., Techniques for Sealing Cone Penetrometer oles, *anadian eotechnical ournal*, Vol 32, o. 5, pp. 880 891.

*ASTM International takes no position respecting the validity o□any patent rights asserted in connection □ith any ite□ □entioned in this standard. Users o□this standard are expressly advised that deter□ination o□the validity o□any s□ch patent rights, and the risk o□in□ringe□ent o□s□ch rights, are entirely their o□n responsibility.*

*This standard is s□b□ect to revision at any ti□e by the responsible technical co□□ittee and □□st be revie□ed every □ve years and i□not revised, either reapproved or □ithdra□n. □o□r co□□ents are invited either □or revision o□this standard or □or additional standards and sho□ld be addressed to ASTM International Head□□arters. □o□r co□□ents □ill receive care□□l consideration at a □eeting o□the responsible technical co□□ittee, □hich yo□□ay attend. I□yo□ □eel that yo□r co□□ents have not received a □air hearing yo□ sho□ld □ake yo□r vie□s kno□n to the ASTM Co□□ittee on Standards, at the address sho□n belo□.*

*This standard is copyrighted by ASTM International, 100 Barr Harbor Drive, PO Box C700, West Conshohocken, PA 19428-2959, United States. Individ□al reprints □single or □□tiple copies□o□this standard □ay be obtained by contacting ASTM at the above address or at □10-8□2-9585 □phone□, □10-8□2-9555 □ax□, or service□ ast□.org □e-□ail□□ or thro□gh the ASTM □ebsite □□□□.ast□.org□*

# Groundwater Sampling Tools

Geoprobe Systems® offers groundwater sampling tools to help characterize the water quality and extent of potential contamination during environmental assessments and investigations in unconsolidated soils and sediments. The groundwater samplers are installed temporarily, a sample is collected, slug tests may be conducted, and then the sampler is removed, decontaminated, and used at the next location. Most of the groundwater samplers permit you to conduct bottom-up grouting to meet regulatory requirements for borehole abandonment. These simple, cost-effective tools have changed the way many environmental assessments and remedial investigations are conducted. You no longer have to install a large-diameter well with costly drilling methods that generate drums full of contaminated cuttings, all just to get 40 milliliters of water for a VOA analysis. Simpler can be better ... smarter ... and less expensive.

The family of Geoprobe® groundwater samplers includes the Screen Point 15 and Screen Point 16 samplers, Mill-Slot Samplers, the Groundwater Profiler, the Ada Profiler, and the DT21 Groundwater Profiler.

The **Screen Point 15/16 Groundwater Samplers** are used to collect groundwater samples from unconsolidated materials at depths ranging from near ground surface to over 100 feet below grade. The depth that can be reached with the SP15/16 samplers is a function of the equipment and methods being used to advance the sampler (manual, static vehicle weight, or percussion probing), the formation being penetrated, and operator experience.

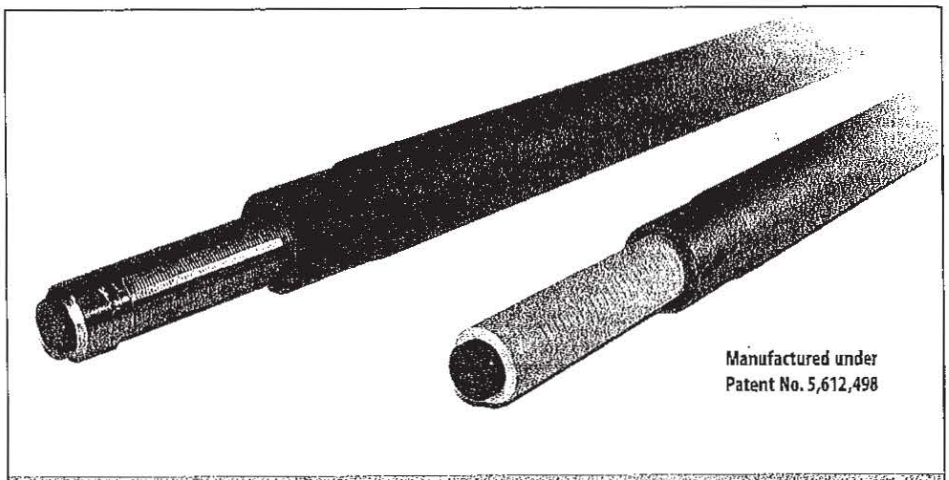

Manufactured under Patent No. 5,612,498

**Screen Point 15 & Screen Point 16**

## Advantages

- Completely sealed during driving
- Stainless steel or PVC screen
- Actual interface samples
- 41 in. exposed screen length
- Fast recharge from formation
- Samples recovered using Tubing Check Valve, Mini-bailer or 0.5 in. Bladder Pump
- Durable Drive Head and Corrosion Resistant Sampler Sheath
- Sample both dissolved compounds and NAPLs
- Built to withstand percussive probing
- Screen sheath forms mechanical annular seal above the screen while sampling

Geoprobe Systems

Global Environmental in Rapid City, SD, used the SP15 Groundwater Sampler at three Superfund sites. They successfully sampled to 128 feet using the SP15 and their Geoprobe® Model 66DT.

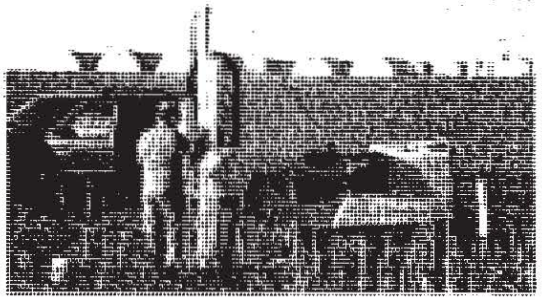

# Screen Point 15 & Screen Point 16 Samplers

## Groundwater Sampling Using the SP15/16 System

The Screen Point 15 groundwater sampling system has been the most widely used direct push system for environmental groundwater investigations for several years. Now Geoprobe Systems® has added the Screen Point 16 system (1.6 in. OD screen sheath) which is designed for use under the more powerful GH60 hammer with the heavier 1.5 in. probe rods. These protected screen samplers have only five parts, including the grout plug, plus a few O-rings. Using either of these tools with O-rings on the rod fittings enables you to collect representative groundwater samples from a discrete interval using a bailer, bladder pump or other device. The length of the screen exposed ro the formation can be set from just a few inches to as much as 41-inches to let you select the sampling zone. Additionally, the same screens (Stainless Steel or PVC) can be used in both samplers. The grout plug at the base of the screen makes it possible to conduct bottom up grouting with bentonite slurries or neat cement using any of the Geoprobe® GS Series grout machines. A printed standard operating procedure for the SP15/16 samplers is available free upon request. Ask for Technical Bulletin No. 95-1500.

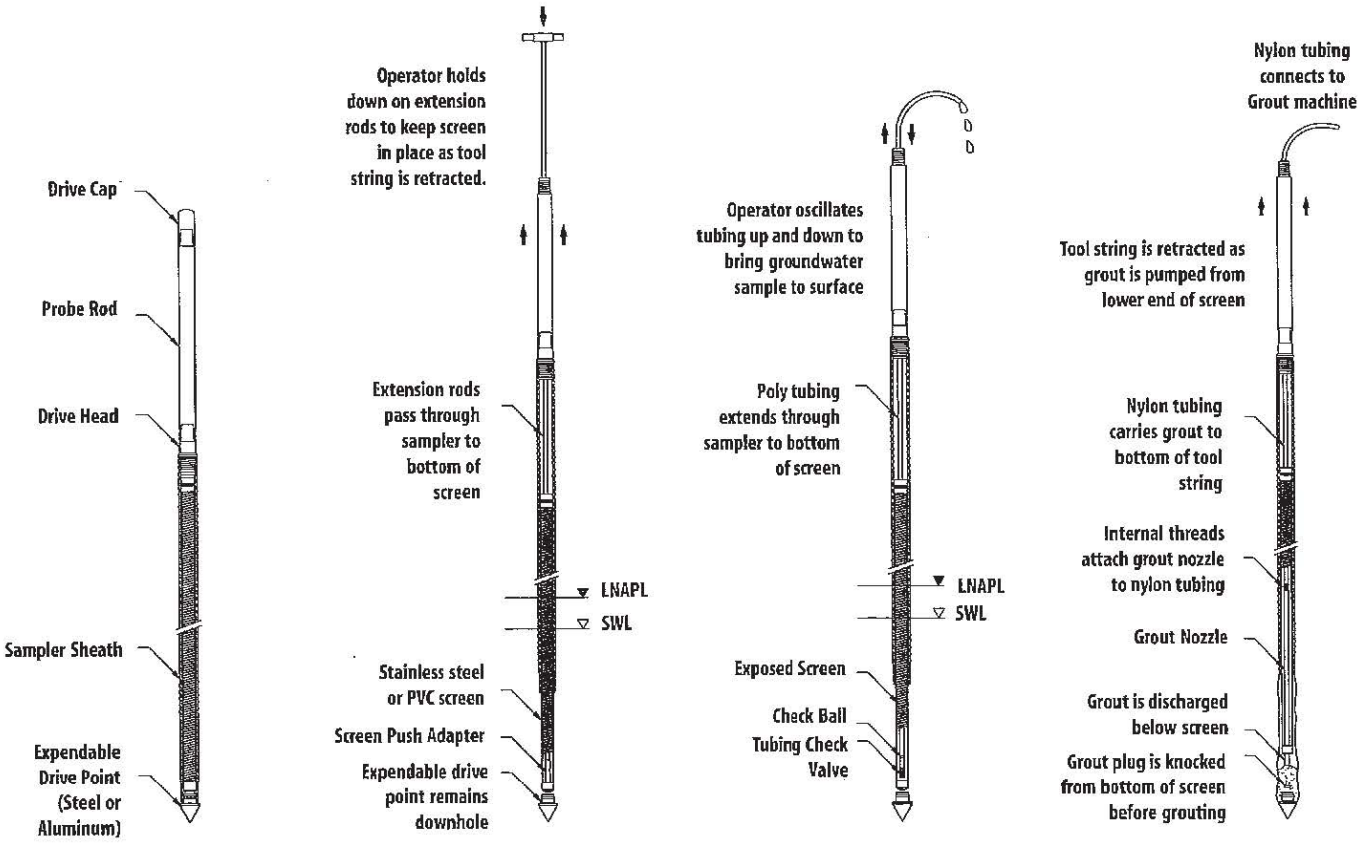


### DRIVING

The assembled Screen Point 15/16 Groundwater Sampler is driven to the desired sampling depth using standard Geoprobe® rods.

### DEPLOYMENT

Extension rods are used to hold the screen in position while the rods and sheath are retracted. The screen sheath forms a mechanical annular seal above the screen interval.

### SAMPLING

The tubing check valve can be used to sample and measure NAPLs within the screen interval as well as sample groundwater. A small bladder pump may be used to collect high-integrity VOC samples.

### GROUTING

Abandonment grouting can be conducted to meet ASTM guidelines. A high-pressure grout pump is used to pump grout into the probe hole as the screen and rods are extracted using the rod grip pull assembly.

## Screen Point 15/16 Parts and Accessories

The SP15 Groundwater Sampler is designed for use with 1 in. or 1.25 in. probe rods under GH40 series hammers while the SP16 sampler is designed for use with the 1.5 in. rods under the GH60 hammer. Recharge of groundwater to the sampler is primarily controlled by the formation. In coarse-grained sandy materials it is possible to purge up to one liter per minute from the SP15/16 samplers using the tubing check valve. While in formations with high proportions of fine silts and clays more time may be required for recharge and to allow the water level in the sampler to come to equilibrium with the screened formation. These tools may also be used to conduct slug tests over discrete intervals (see Chapter 10).

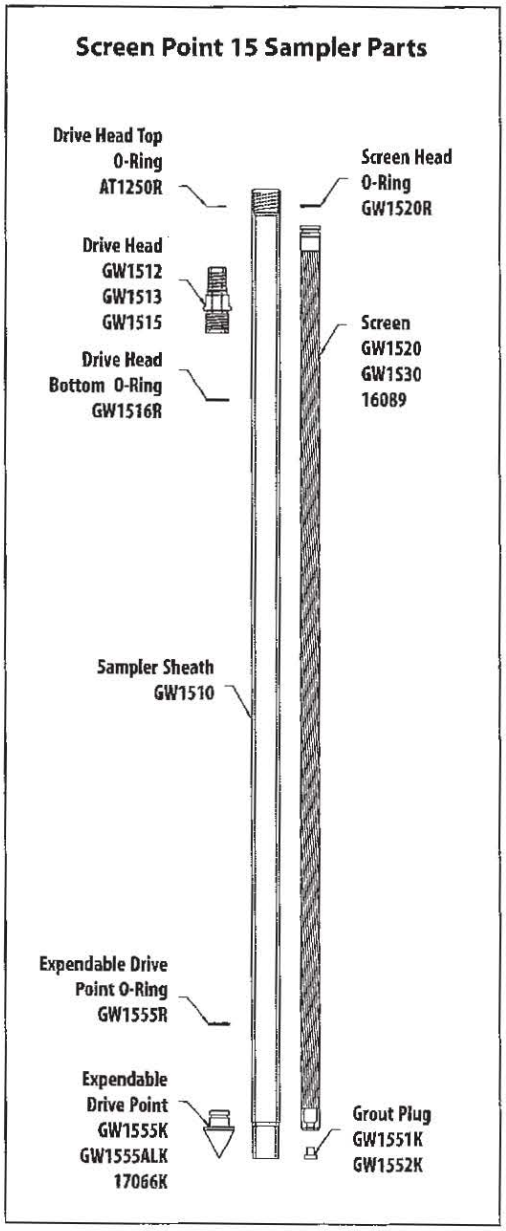


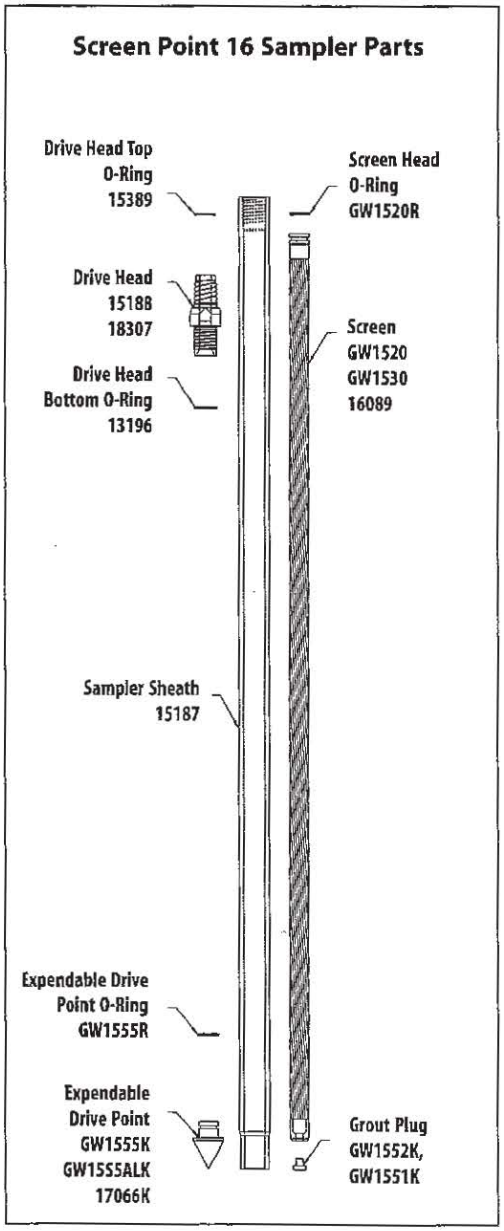


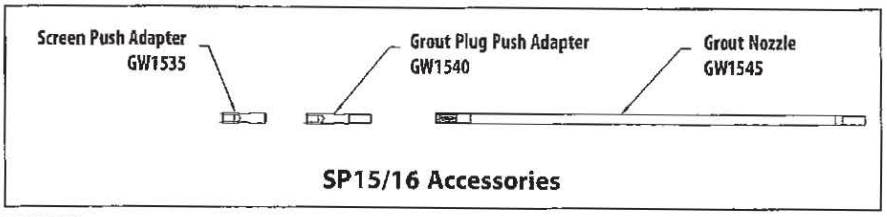


The Screen Push Adapter is used at the end of the lead extension rod to hold the screen in position as the probe rods and sheath are retracted. The Grout Plug Push Adapter is used to knock out the grout plug after sampling is completed to allow for bottom-up grouting using the Grout Nozzle, tremie tube and grout pump.

*SOP L-12:*

*GEOPROBE PREPACK WELL INSTALLATION TECHNICAL BULLETIN 992500*

*ASTM D 6724 Geoprobe Well Installation*

# GEOPROBE® 1.0-IN. X 2.5-IN. OD AND 1.5-IN. X 2.5-IN. OD PREPACKED SCREEN MONITORING WELLS

## STANDARD OPERATING PROCEDURE

**Technical Bulletin No. 992500**

**PREPARED: August, 1999**

**REVISED: January, 2011**

**GEOPROBE® 1.0-in. x 2.5-in. O.D. PREPACKED SCREEN AND PVC RISER**

**Geoprobe® and Geoprobe Systems®, Macro-Core® and Direct Image® are Registered Trademarks of Kejr, Inc., Salina, Kansas**

**Geoprobe® Prepacked Screens are manufactured under U.S. Patent No. 7,735,553B2.**

© 1999-2011 Kejr, Inc.
ALL RIGHTS RESERVED.
No part of this publication may be reproduced or transmitted in any form or by any means, electronic or mechanical, including photocopy, recording, or any information storage and retrieval system, without permission in writing from Kejr, Inc.

## 1.0 OBJECTIVE

The objective of this procedure is to install a permanent, small-diameter groundwater monitoring well that can be used to collect water quality samples, conduct hydrologic and pressure measurements, or perform any other sampling event that does not require large amounts of water over a short period of time (e.g. flow rate > 1 liter/minute). These methods meet or exceed the specifications discussed for direct push installation of permanent monitoring wells with prepacked screens in the U.S. Environmental Protection Agency's guidance document, *Expedited Site Assessment Tools For Underground Storage Tank Sites*, (EPA, 1997) and ASTM Standards *D 6724* (ASTM, 2002) and *D 6725* (ASTM, 2002).

## 2.0 BACKGROUND

### 2.1 Definitions

**Geoprobe® Direct Push Machine:** A vehicle-mounted, hydraulically-powered machine that uses static force and percussion to advance small-diameter sampling tools into the subsurface for collecting soil core, soil gas, or groundwater samples. The Geoprobe® brand name refers to both machines and tools manufactured by Geoprobe Systems®, Salina, Kansas. Geoprobe® tools are used to perform soil core and soil gas sampling, groundwater sampling, soil conductivity and contaminant logging, grouting, materials injection, and to install small-diameter permanent monitoring wells or temporary piezometers.
**Geoprobe® and Geoprobe Systems® are registered trademarks of Kejr, Inc., Salina, Kansas.*

**1.0-inch x 2.5-inch OD Prepacked Well Screen (1.0-inch prepack):** An assembly consisting of a slotted PVC pipe surrounded by environmental grade sand contained within a stainless steel wire mesh cylinder. The inner component of the prepacked screen is a flush-threaded, 1.0-inch Schedule 40 PVC pipe with 0.01-inch (0.25 mm) slots. Stainless steel wire mesh with a pore size of 0.011 inches (0.28 mm) makes up the outer component of the prepack. The space between the inner slotted pipe and outer wire mesh is filled with 20/40 mesh silica sand. Geoprobe® 1.0-inch x 2.5-inch prepacks are available in 5-foot sections and have an outside diameter of 2.5 inches (64 mm) and a nominal inside diameter of 1.0 inches (25 mm).

The 1.0-inch prepack is also available in a "field pack" configuration in which the user adds sand to the screen prior to installation. This reduces shipping weight by approximately 12.3 pounds (5.6 kg) per screen.

**1.5-inch x 2.5-inch OD Prepacked Well Screen (1.5-inch prepack):** An assembly consisting of a slotted PVC pipe surrounded by environmental grade sand contained within a stainless steel wire mesh cylinder. The inner component of the prepacked screen is a flush-threaded, 1.5-inch Schedule 40 PVC pipe with 0.01-inch (0.25 mm) slots. Stainless steel wire mesh with a pore size of 0.011 inches (0.28 mm) makes up the outer component of the prepack. The space between the inner slotted pipe and outer wire mesh is filled with 20/40 mesh silica sand. Geoprobe® 1.5-inch x 2.5-inch prepacks are available in 5-foot sections and have an outside diameter of 2.5 inches (64 mm) and a nominal inside diameter of 1.5 inches (38 mm).

### 2.2 Discussion

Conventional monitoring wells are typically constructed through hollow stem augers by lowering slotted PVC pipe (screen) to depth on the leading end of a string of threaded PVC riser pipe. A filter pack is then installed by pouring clean sand of known particle size through the tool string annulus until the slotted section of the PVC pipe is sufficiently covered.

Installing the entire filter pack through the tool string annulus becomes a delicate and time-consuming process when performed with small-diameter direct push tooling. Sand must be poured very slowly in order to avoid bridging between the riser pipe and probe rod. When bridging does occur, considerable time can be lost in attempting to dislodge the sand or possibly pulling the tool string and starting over.

Prepacked screens greatly decrease the volume of loose sand required for well installation as each screen assembly includes the necessary sand filter pack. Sand must still be delivered through the casing annulus to provide a minimum 2-foot grout barrier, but this volume is significantly less than for the entire screened interval.

The procedures outlined in this document describe construction of a permanent groundwater monitoring well using Geoprobe® 3.5-inch (89 mm) or 3.25-inch (83 mm) outside diameter (OD) probe rods and 2.5-inch OD prepacked screens. Geoprobe® 2.5-inch OD prepacks are available with either nominal 1.0-inch or 1.5-inch schedule 40 PVC components with a running length of 5 feet.

Installation of a prepack monitoring well begins by advancing 3.5-inch (89 mm) or 3.25-inch (83 mm) probe rods to depth with a Geoprobe® direct push machine. Prepacked screen(s) are then assembled and installed through the 2.625-inch (67 mm) inside diameter (ID) of the probe rods using corresponding 1.0-inch or 1.5-inch schedule 40 PVC riser (Fig. 2.1). Once the prepacks are lowered to depth, the rod string is slowly retracted until the leading end of the rods is approximately 3 feet above the top prepack.

Regulations generally require a minimum 2-foot grout barrier above the top prepack (Fig. 2.2) to avoid contaminating the well screens with bentonite or cement during installation. In some instances, natural formation collapse will provide the required barrier. If the formation is stable and does not collapse around the riser as the rod string is retracted, environmental grade 20/40 mesh sand may be installed through the probe rods to provide the minimum 2-foot grout barrier.

Granular bentonite or bentonite slurry is then installed in the annulus to form a well seal (Fig. 2.2). A high-pressure grout pump (Geoprobe® Model GP300 or GP350) may be used to tremie high-solids bentonite slurry or neat cement grout to fill the well annulus as the probe rods are retracted (Fig. 2.3). The grout mixture must be installed with a tremie tube from the bottom up to accomplish a tight seal without voids to meet regulatory requirements.

In certain formation conditions, the prepacked screens may bind inside the probe rods as the rods are retracted. This is most common in sandy formations sometimes called flowing or heaving sands. This binding can generally be overcome by lowering extension rods down the inside of the well riser and gently, but firmly, tapping the extension rods against the base of the well as the rods are slowly retracted. If the binding persists, clean tap water or distilled water may be poured down the annulus of the rods to increase the hydraulic head inside the well. This, combined with the use of the extension rods, will free up the prepacked screen and allow for proper emplacement.

Once the well is set, conventional flush-mount or aboveground well protection can be installed to prevent tampering or damage to the well head (Fig. 2.2). These wells can be sampled by several available methods (mechanical bladder pump, mini-bailer, Geoprobe® tubing check valve, etc.) to obtain high integrity water quality samples. These wells also provide accurate water level measurements and can be used as observation wells during aquifer pump tests.

When installed properly, these small-diameter wells generally meet regulatory requirements for a permanent monitoring well. While a detailed installation procedure is given in this document, it is by no means totally inclusive. **Always check local regulatory requirements and modify the well installation procedure accordingly.** These methods meet or exceed the specifications discussed for direct push installation of permanent monitoring wells with prepacked screens in the U.S. Environmental Protection Agency's guidance document, *Expedited Site Assessment Tools For Underground Storage Tank Sites*, (EPA, 1997) and ASTM Standards *D 6724* (ASTM, 2002) and *D 6725* (ASTM, 2002).

** The Mechanical Bladder Pump is manufactured under U.S. Patent No. 6,877,965 issued April 12, 2005.*

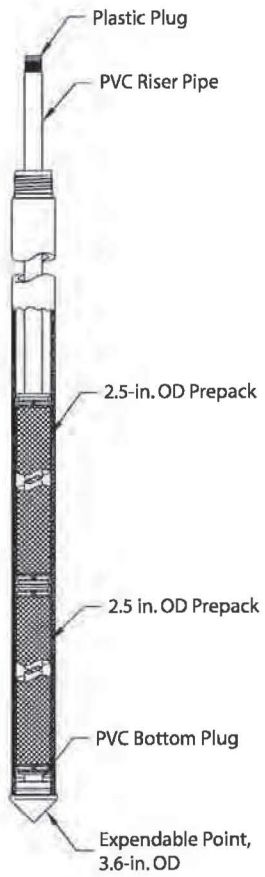


**FIGURE 2.1**
**Insertion of Prepack Screens**

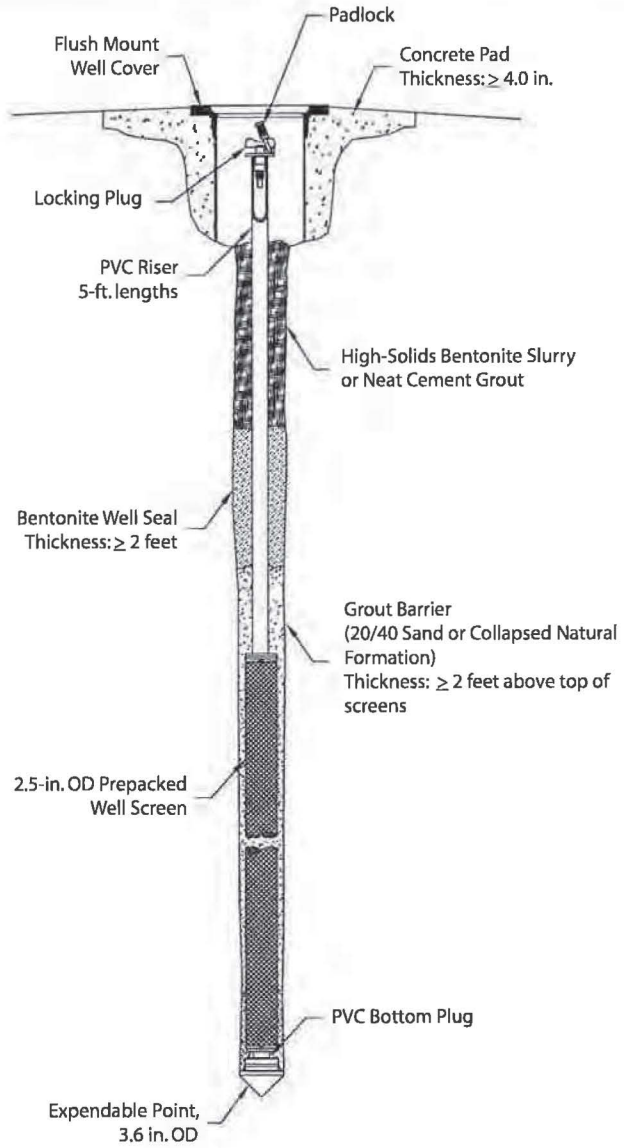


**FIGURE 2.2**
**Installed Geoprobe® 2.5-in. OD Prepacked Screen Monitoring Well**

## 3.0 TOOLS AND EQUIPMENT

The following equipment is required to install a permanent monitoring well with Geoprobe® 2.5-inch OD prepacked screens. Refer to Figures 3.1 and 3.2 for illustrations of well components.

| 1.0-in. X 2.5-in. Prepack Well Components | Part Number |
|---|---|
| 1.0-in. x 2.5-in. Prepacked Screen, 5-ft. length | 17467 |
| 1.0-in. x 2.5-in. Fieldpacked Screen (w/o sand), 5-ft. length | 11679 |
| 1.0-in. x 2.5-in. Fieldpacked Screen (w/o sand), 3-ft. length | GW2436 |
| PVC Riser, 1.0-in. sch. 40, 5-ft. length | 12876 |
| O-rings for 1.0-in. PVC Riser, Pkg. of 25 | 13196 |
| PE Top Plug, 1.0-in. sch. 40 riser | 13227 |
| Locking Well Plug, for 1.0-in. sch. 40 riser | WP1710 |
| PVC Bottom Plug, 1.0-in. sch. 40 flush thread | 12881 |
| Expendable Drive Point, 3.5 or 3.25-in. rods / 3.6-in. OD | AT3215 |

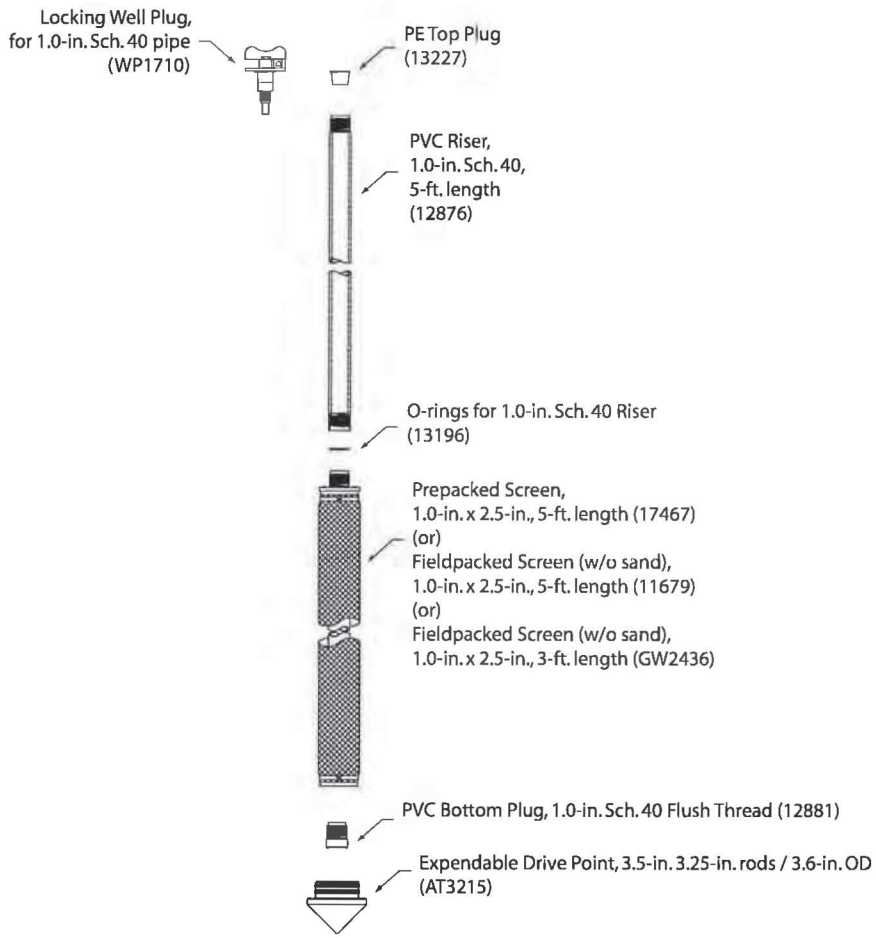


**FIGURE 3.1:**
**1.0-in. x 2.5-in. Prepacked and Fieldpacked Screen Monitoring Well Parts**

| 1.5-in. X 2.5-in. Prepack Well Components | Part Number |
|---|---|
| 1.5-in. x 2.5-in. Prepacked Screen, 5-ft. length | 17401 |
| PVC Riser, 1.5-in. sch. 40, 5-ft. length | 17405 |
| O-rings for 1.5-in. PVC Riser, Pkg. of 25 | 18782 |
| PE Top Plug, 1.5-in. sch. 40 riser | 21465 |
| Locking Well Plug, for 1.5-in. sch. 40 riser | WP1715 |
| PVC Bottom Plug, 1.5-in. sch. 40 flush thread | 17407 |
| Expendable Drive Point, 3.5 or 3.25-in. rods / 3.6-in. OD | AT3215 |

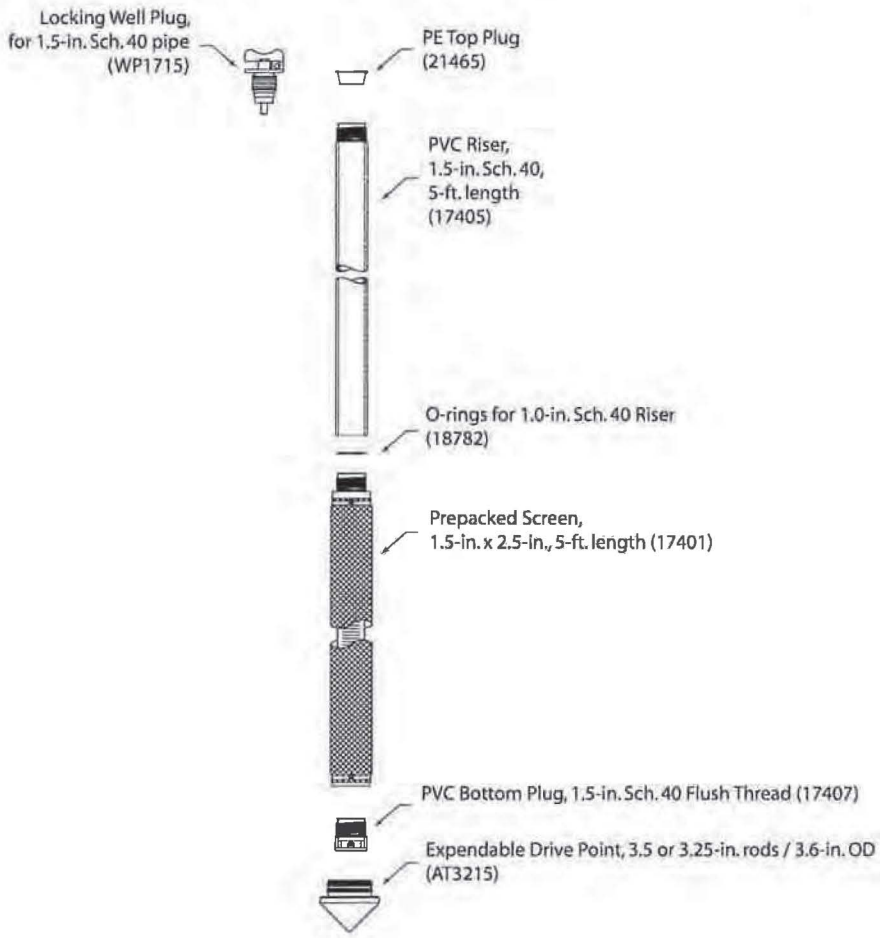


**FIGURE 3.2:**
**1.5-in. x 2.5-in. Prepacked Screen Monitoring Well Parts**

| Monitoring Well Accessories | Part Number |
|---|---|
| Well Cover, flush-mount, 4-in. x 12-in., cast iron / ABS skirt | WP1741 |
| Well Cover, flush-mount, 7-in. x 10-in., cast iron / galvanized skirt | WP1771 |
| Sand, environmental grade (20/40 mesh), 50-lb. bag | AT95 |
| Bentonite, granular (8 mesh), 50-lb. bag | AT91 |
| Bentonite, powdered (200 mesh), 50-lb. bag | AT92 |

| Geoprobe® Tools and Equipment | Part Number |
|---|---|
| Probe Rod, 3.5-in x 48-in. or 60-in. | 38951 or 36641 |
| Probe Rod, 3.5-in x 1 meter (optional) | 38952 |
| Probe Rod, 3.25-in. x 48-in. or 60-in. | 10594 or 9040 |
| Probe Rod, 3.25 in. x 1 meter (optional) | 13925 |
| O-Rings for 3.25-in. Probe Rods (Pkg. of 25) | 9960 |
| Expendabel Point Holder, 3.5-in. x 48-in. or 60-in | 38953 or 37763 |
| Expendable Point Holder, 3.25-in. x 48-in. or 60-in. | 10596 or 9796 |
| Expendable Point Holder, 3.5-in x 1 meter (optional | 38955 |
| Expendable Point Holder, 3.25 in. x 1 meter (optional) | 13926 |
| Expendable Point Assembly, Steel, 3.6-inch OD | AT3215 |
| Drive Cap, Threadless, 3.5-inch Probe Rods (GH40 Hammer) | 38982 |
| Drive Cap, Threadless, 3.5-inch Probe Rods (GH60 Hammer) | 36642 |
| Drive Cap, Threadless, 3.25-inch Probe Rods (GH40 Hammer) | 10605 |
| Drive Cap, Threadless, 3.25-inch Probe Rods (GH60 Hammer) | 9742 |
| Rod Grip Pull Handle, 3.5-in. Probe Rods (GH40 Hammer) | 38983 |
| Rod Grip Pull Handle, 3.5-in. Probe Rods (GH60 Hammer) | 44688 |
| Rod Grip Pull Handle, 3.25-in. Probe Rods (GH40 Hammer) | 12235 |
| Rod Grip Pull Handle, 3.25-in. Probe Rods (GH60 Hammer) | 9757 |
| Extension Rod, 48-in. or 60-in. | AT671 or 10073 |
| Extension Rod, 1-meter (optional) | AT675 |
| Extension Rod Coupler | AT68 |
| Extension Rod Handle | AT69 |
| Extension Rod Quick Links Pin | AT695 |
| Extension Rod Quick Link Box | AT696 |
| Screen Push Adapter | GW1535 |
| Grout Machine | GP300 or GP350 |
| Grout System Accessories, 1.5-in. Rods | GS1015 |
| Water Level Meter, 0.438-in. OD Probe, 100-ft. Cable* | GW2000 |
| Stainless Steel Mini-Bailer (optional) | GW41 |
| Check Valve Assembly, 0.375 in. OD Tubing* | GW4210 |
| Well Development Tool 1.5-in | 34558 |
| Well Development Tool 1.0-in | 35364 |
| Polyethylene Tubing, 0.375-in. OD, 500-ft. (for purging, sampling, etc.) | TB25L |
| Mechanical Bladder Pump | MB470 |
| Low-Density Polyethylene Tubing, 0.625-in. OD, 100-ft. (for tremie tube grouting) | 16857 |
| Grout Tubing Adapter, for 0.625-in. OD Tubing | 16893 |

**Refer to Appendix A for additional tool options.*

***Refer to Standard Operating Procedure (SOP) for the Mechanical Bladder Pump (Technical Bulletin No. MK3013) for additional tooling needs.*

## 4.0 SAND INSTALLATION IN 1.0 IN. X 2.5-IN. FIELDPACK WELL SCREEN

Due to the significant weight of the sand in a 1.0-in. x 2.5-in. Prepack Well Screen (17467), a 1.0-in. x 2.5-in. OD Fieldpack Screen (11679) is available without sand to reduce shipping costs. It is necessary to add sand to the fieldpack screen prior to installation. A specific packing procedure must be followed in order to prevent the sand from settling in the screen after well installation. This section describes the procedure for properly installing sand in a 1.0-in. x 2.5-in. Fieldpack Well Screen.

### 4.1 Required Equipment

1 Quart (1 L) Container (1)
Phillips-Head Screwdriver (1)
20-40 Mesh Sand (1gallon / 3.75 L)
Fieldpack Screen Asm., P/N 11679 (1):
- PE Top Plug, (1)
- Stainless Steel Screw, (2)
- Gray PVC Cap, (1)
- Sand Cylinder, (1)

### 4.2 Procedure

1. Ensure that the PE top plug is pushed into the top of the PVC riser and both screws are threaded into the gray bushing (Fig. 4.1).
2. Slide the clear sand cylinder over the screen such that the leading end of the cylinder is approximately 1.25 inches below the top of the gray PVC bushing (Fig. 4.1).

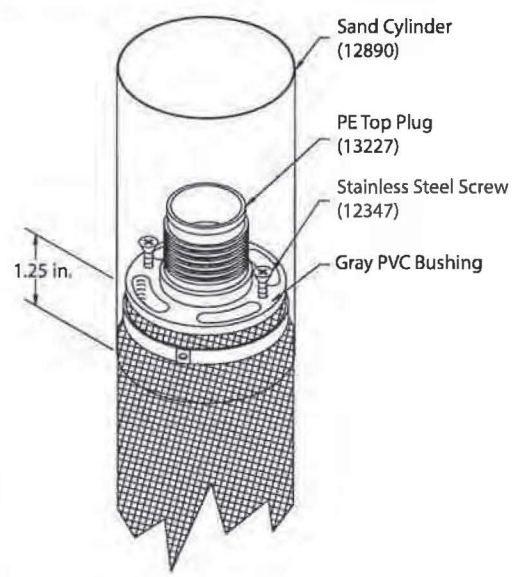


**FIGURE 4.1.**
**Selected components of a 1.0-in. x 2.5-in. OD Fieldpack Well Screen**

**IMPORTANT: Do not push the sand cylinder farther onto the screen than indicated as this will make it difficult to remove once the screen is packed with sand.**

**CAUTION: Use care when handling the screen with bare hands. Small wires protruding from the screen can easily puncture the skin.**

3. Pour 3 quarts (3 L) of sand into the sand cylinder. This will fill the screen approximately 3/4 to 7/8 full.

4. The screen must now be tapped on the ground to settle (pack) the sand.
   **a)** Gently grasp the screen and raise it approximately 2 inches (5 cm) off the ground.

**IMPORTANT: Be careful when gripping the screen to squeeze it just hard enough to lift it from the ground. The screen may be damaged if too much pressure is applied before the screen is packed with sand.**

   **b)** Release the screen and allow it to fall back to the ground.

**IMPORTANT: Do not drop the screen more than 2 inches (5 cm) as this can damage the screen.**

   **c)** Repeat Steps 4.2.4-A and B for a total of 15 "drops".

5. Completely fill the screen with sand. Add enough sand to also fill the sand cylinder approximately three/quarters full.

   **NOTE:** Screen will hold approximately 4 quarts (3.75 L) of sand when all has settled after packing.

6. Lift and drop the screen an additional 60-80 times to finish packing the sand. Remember not to drop the screen from a height of more than 2 inches (5 cm). After this step, the screen should feel very firm.

7. Remove the sand cylinder by rocking it from side-to-side while pulling upward. Let the excess sand drain from the bottom of the cylinder. Brush any remaining sand from the top of the gray bushing.

8. Remove the stainless steel screws (Fig. 4.1) from the gray bushing using the phillips-head screwdriver.

9. Place the gray PVC cap on top of the screen with the countersunk holes "up" as shown in Figure 4.2.

**IMPORTANT: Ensure that no sand is trapped between the cap and bushing as this may allow sand to leak from the screen during handling.**

10. Attach the PVC cap to the PVC bushing by installing the two stainless steel screws (Figs. 4.2).

Installation of sand in the fieldpack screen is now complete. Remember to remove the top plug from the screen before attaching the first section of riser pipe. Do not throw away the plug as it may be used to keep grout and other materials from entering the top of the riser during well installation.

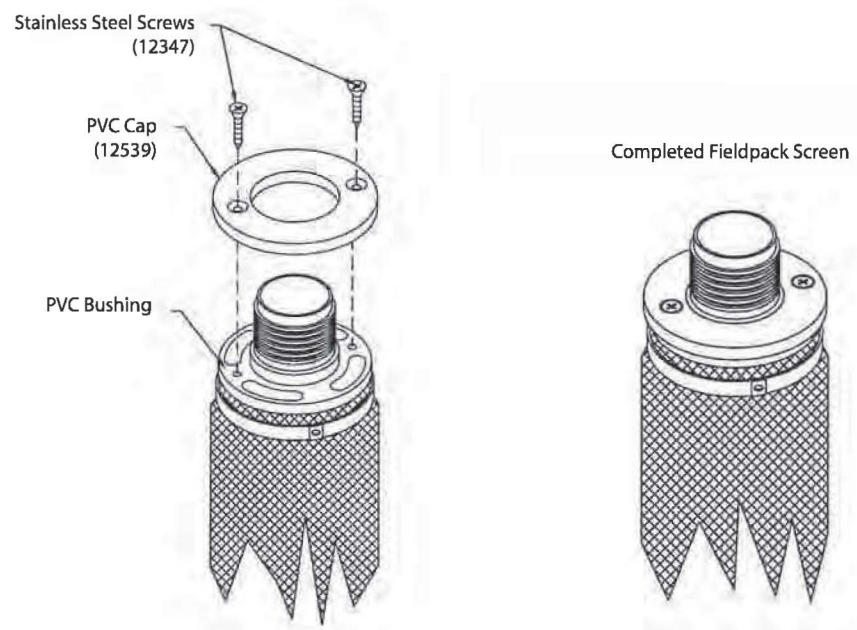


**FIGURE 4.2.**
**The PVC cap is attached to the top of the screen with two stainless steel screws.**

## Sand Installation Quick Reference Guide

### Step 1 ...

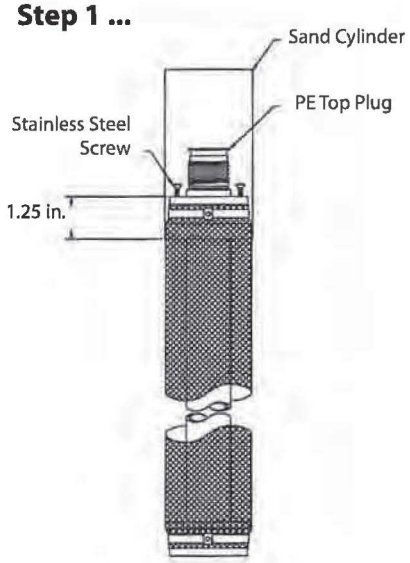


1. Position sand Cylinder.

### Step 2 ...

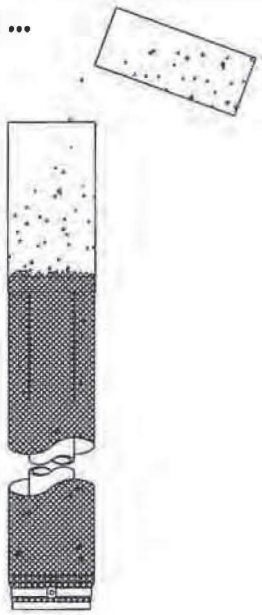

1. Fill screen with sand.
2. Tap screen on ground to pack sand.
3. Add more sand to completely fill screen.
   Screen will hold about 4 quarts (3.75 L) of sand.

### Step 3 ...

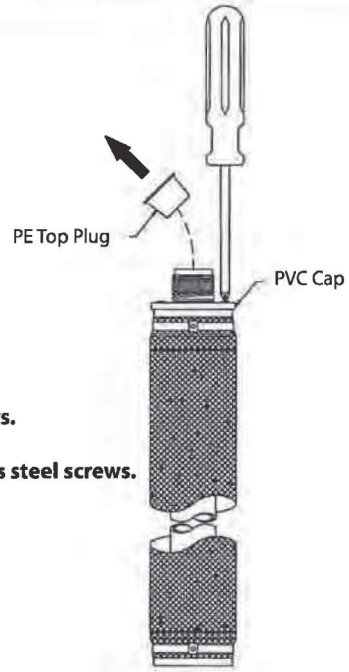


1. Remove sand cylinder.
2. Remove stainless steel screws.
3. Position PVC cap.
4. Replace and tighten stainless steel screws.
5. Remove top plug.

## 5.0 WELL INSTALLATION

Monitoring well installation can be divided into the six main tasks listed below. This section provides specific instructions for the completion of all six tasks.

- Driving the probe rods to depth
- Deploying the screen(s) and riser pipe
- Installing a sand/grout barrier
- Installing a bentonite seal above the screen
- Grouting the well annulus
- Installing surface protection

NOTE: The many prepacked screen options have resulted in an extensive list of Geoprobe® part numbers. To simplify the instructions presented in this document, part numbers for well components are not specified in the text or illustrations. Refer to Section 3.0 for part numbers and complete descriptions for all well components and accessories.

**Installing sand in the 1.0-in. x 2.5-in Fieldpacked Well Screen**

The 1.0-inch x 2.5-inch fieldpacks can be packed with sand before arriving at the job site or at the job site. To help make the well installation process more efficient, Geoprobe Systems® recommends packing all well screens with sand before mobilizing to the job site. Each box of 1.0-inch x 2.5-inch Fieldpacked Screens includes a complete set of sand filling instructions. The process of filling the screens with sand is also described in Section 4.0 of this document.

### 5.1 Driving Probe Rods to Depth

1. Place the Geoprobe® direct push machine at the proposed monitoring well location and unfold the probe assembly into the operating position as instructed in the machine Owner's Manual. Because access to the top of the probe rod string is required, it is important to allow room for derrick retraction when positioning the unit for operation.

2. Insert a 3.6-inch OD Expendable Point Assembly into the unthreaded end of a 3.5-inch or 3.25-inch Expendable Point Holder. See Figure 5.1.

3. Place a 3.5-inch or 3.25-inch Drive Cap over the threaded end of the expendable point holder.

4. Place the expendable point holder under the hydraulic hammer in the driving position (refer to direct push machine Owner's Manual). Advance the point holder into the ground, using percussion if necessary. To install an accurately placed monitoring well, it is important to drive the rod string as straight as possible. If the point holder is not straight, retract the assembly from the ground and start over with Step 1.

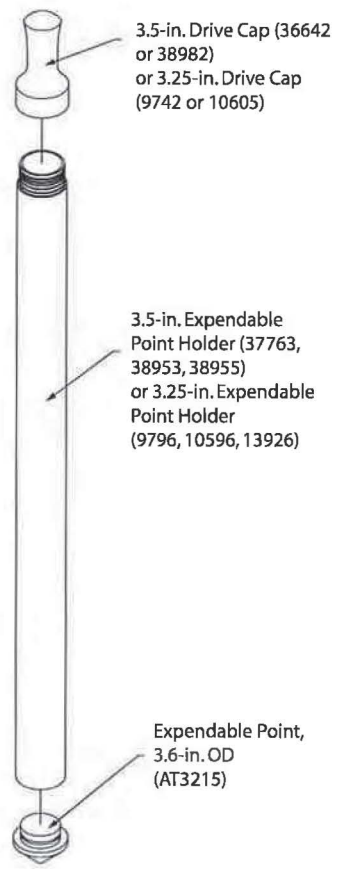


**FIGURE 5.1**
**Drive Cap, Expendable Point Holder and Expendable Point Assembly**

5. Remove the drive cap from the expendable point holder. Install an O-ring on the point holder in the groove located at the base of the male threads (Fig. 5.2) Make sure the O-ring groove and O-ring mating surface are clean. Any foreign material located in these areas will prevent the O-ring from sealing properly.

**IMPORTANT: O-rings must always be used to seal the Probe Rod joints.**

6. Lubricate the O-ring and O-ring mating surface (Fig. 5.3) with a small amount of clean water. Apply the water with either a moist cloth or a spray bottle.

7. Thread a 3.5-inch or 3.25-inch Probe Rod onto the expendable point.

8. Place the drive cap on the probe rod and advance the rod string the full stroke of the machine.

9. Remove the drive cap. Again, install an O-ring in the O-ring groove of the probe rod. Lubricate the O-ring and the O-ring mating surface (Fig. 5.3). Add the next probe rod, replace the drive cap, and advance the rod string.

10. Repeat Step 9 until the leading end of the rod string is 1.5 inches (3.8 cm) below the bottom of the desired screen interval. The additional depth adjusts for the extra height created by the expendable point and the PVC Bottom Plug. The top probe rod must also extend at least 15 inches (38 cm) above the ground surface to allow room for the rod grip puller used later in this procedure. (An additional rod may be added if necessary.) Move the machine foot back to provide access to the top of the rod string.

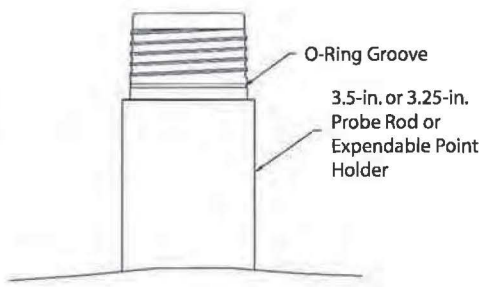


**FIGURE 5.2**
**Probe Rod O-Ring Groove**

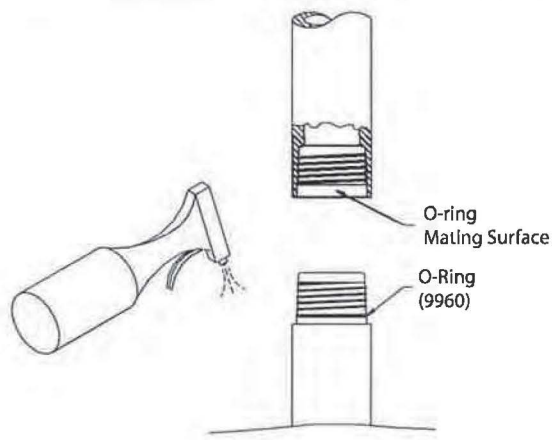


**FIGURE 5.3**
**Lubricating O-Ring and Mating Surface**

## 5.2 Deploying the Screen(s) and Riser Pipe

**1.** With the probe rods driven to the proper depth, the next step is to deploy the prepacked or field-packed screen(s) and riser pipe. If using fieldpacks, inspect the screens to ensure that:

**a)** the plastic plug is removed.
**b)** the stainless steel screws are snug.(See Fig. 5.4)

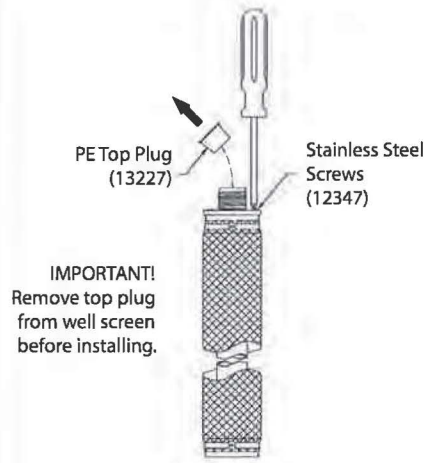


**FIGURE 5.4**
**Inspecting a Fieldpacked Screen**

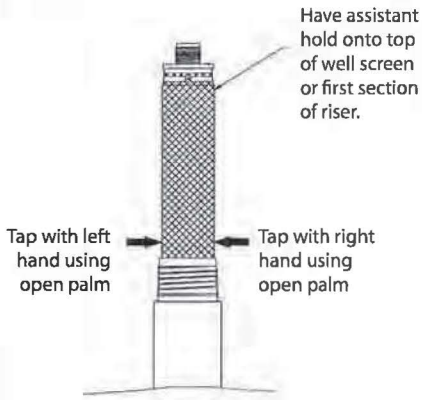


**FIGURE 5.6**
**Tap On Sides of Prepack**
**If Difficult to Install**

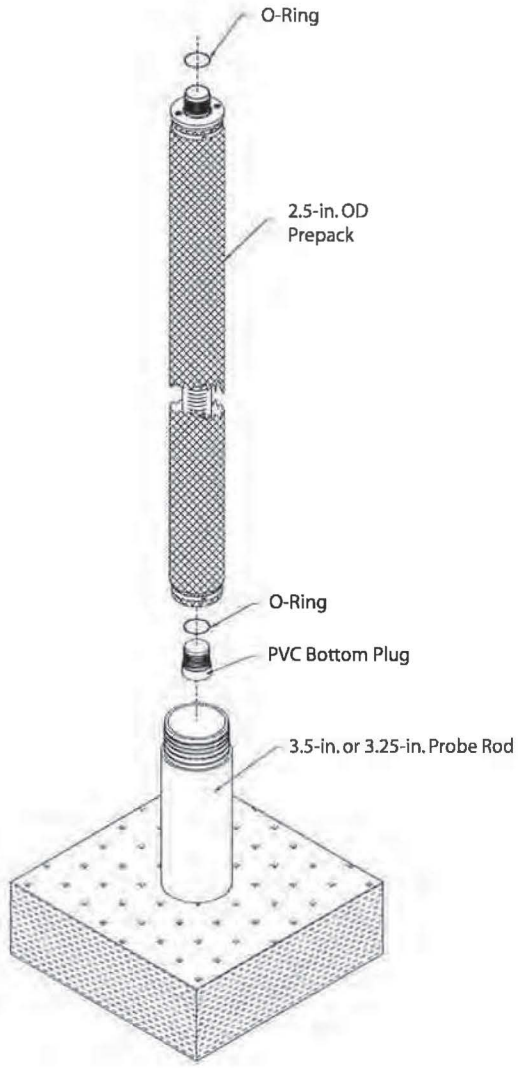


**FIGURE 5.5**
**Prepacked Screen Assembly**
**Inserted Into Rod String**

**IMPORTANT: The following installation instructions specify "prepack(s)" and "prepacked screen(s)", but are also applicable to 1.0-in. x 2.5-in. fieldpacked screens.**

2. Thread a PVC Bottom Plug into a 2.5-in. OD prepack. An O-ring may be used on the plug if desired.

3. Leading with the bottom plug, insert the prepacked screen assembly into the probe rod string as shown in Figure 5.5. If the prepack does not slide easily into the rods, do not force it. With the lower end of the prepack in the probe rod, hit the screen simultaneously with both hands using a clapping motion (Fig. 5.6). With this technique, the screen will drop by gravity into the probe rods. Have an assistant hold onto the top portion of the screen to prevent the screen from unexpectedly falling downhole.

**CAUTION: Be careful when "kneading" the screen. Sudden screen slippage can pinch hands between the screen and the probe rod. To prevent screen slippage, have an assistant hold onto the prepack during the "kneading" operation.**

4. Add additional five-foot prepacks to obtain the desired screened interval. O-rings can be installed between the prepack sections if desired.

5. With the assistance of a second person, attach five-foot sections of 1.0-inch Schedule 40 PVC Riser to the top of the screen assembly. O-rings are required at each riser joint to prevent groundwater, located above the desired monitoring interval, from seeping into the well. Continue to add riser sections until the assembly reaches the bottom of the probe rods (Fig. 5.7). At least one foot (0.3 m) of riser should extend past the top probe rod. Place the plastic plug into the top riser. Duct tape may be used to help keep the plug in the riser.

6. It is now time to pull up the probe rods from around the well screen and riser. Reposition the probe unit so that the Rod Grip Puller can be attached to the rod string.

(continued on Page 16)

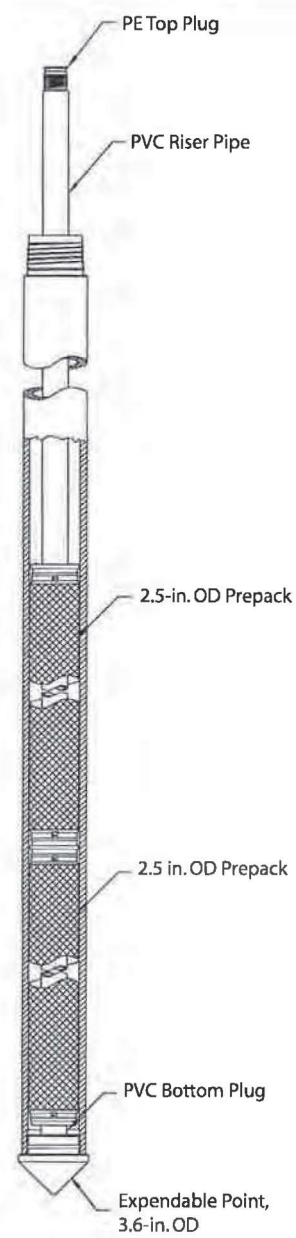


**FIGURE 5.7**
**Prepack Assembly Inside Probe Rods**

7. Retract the rod string the total length of all the screens plus an additional 3 feet (1 m). While pulling the rods, observe whether the top PVC riser stays in place or moves up with the rods.

**a)** If the riser stays in place, stable formation conditions are present. Continue retracting the rods to the depth specified above. Go to Section 4.4.

**b)** If the riser moves up with the probe rods, have a second person hold it in place while pulling up the rods. An additional section of PVC riser may be helpful. Once the probe rods have cleared the lower section of screen, the screen and riser assembly should stop rising with the rods. Continue retracting to the depth specified above. Go to Section 5.4.

**c)** If the risers continue to move up with the probe rods and cannot be held in place by hand, sand heave has most likely caused the screen to bind to the inside of the rods. Extension rods are now required. (Refer to Figure 5.8 for an illustration of extension rod accessories.)

**d)** Place a Screen Push Adapter on the end of an Extension Rod. Insert the adapter and extension rod into the PVC riser and hold either by hand or with an Extension Rod Jig. Attach additional extension rods with Extension Rod Couplers or Extension Rod Quick Links until the push adapter contacts the bottom of the screens (Fig. 5.9). Place an Extension Rod Handle on the top extension rod after leaving 3 to 4 feet (1 to 1.2m) of extra height above the last probe rod.

**e)** Slowly retract the probe rods while another person pushes and taps on the screen bottom with the extension rods (Fig. 5.9). To ensure proper placement of the screen interval and to prevent well damage, be careful not to get ahead while pulling the probe rods. The risers should stay in place once the probe rods are withdrawn past the screens. Retrieve the extension rods. Place the plug back into the top riser and secure it with duct tape if necessary.

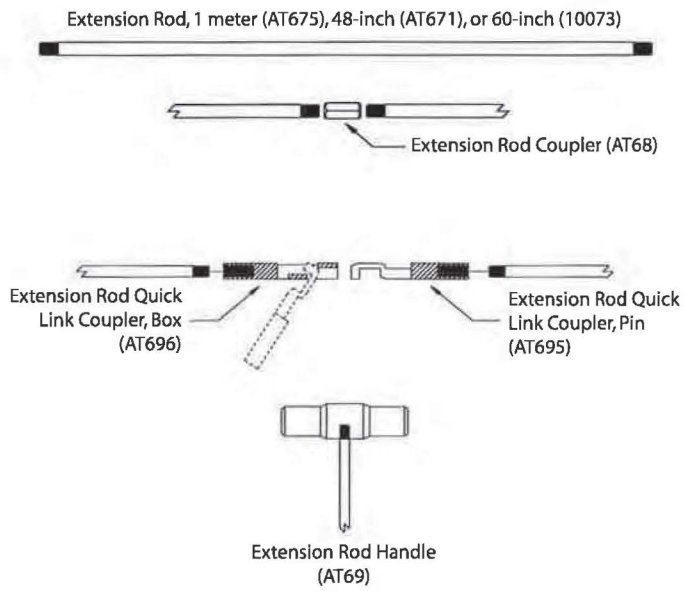


**FIGURE 5.8**
**Geoprobe® Extension Rods and Accessories**

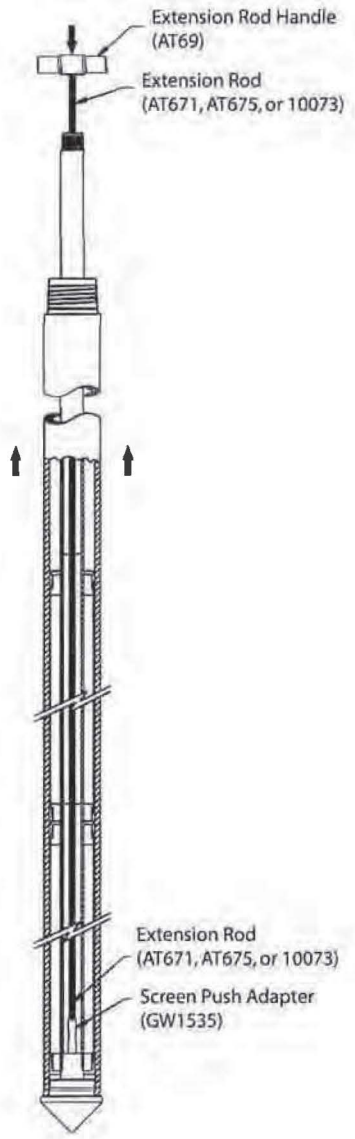


**FIGURE 5.9**
**Using Extension Rods to Tap Out Wedged Screens**

## 5.3 Installing the Grout Barrier

The natural formation will sometimes collapse around the well screens and PVC riser as the probe rod string is pulled back. This provides an effective barrier between the screens and grout material used to seal the well annulus. If the formation does not collapse, a sand barrier must be installed from the surface. This portion of the well installation procedure is important because an inadequate barrier will allow grout to reach the well screens. Grout contamination can produce non-representative samples and retard groundwater flow into the well.

1. Using a Water Level Indicator or flat tape measure, determine the depth from the top of the PVC riser to the bottom of the riser and probe rod annulus. Two scenarios are possible:

   **a) Measured depth is 2 to 3 feet (0.6 to 0.9 m) less than riser length:** This indicates that unstable conditions have resulted in formation collapse. A natural grout barrier was formed as material collapsed around the PVC riser when the probe rods were retracted. This commonly occurs in sandy formations. No further action is required. Proceed with Section 5.5 and perform Step 2 (unstable formation).

   **b) Measured depth is equal to or greater than riser length:** This indicates that stable conditions are present. The probe hole has remained open and void space exists between the riser (and possibly the screen) and formation material. Clean sand must be placed downhole to provide a suitable grout barrier. Continue with Step 2.

2. Begin slowly pouring 20/40 grade sand down the annulus between the PVC riser and probe rod string. Reduce spillage by using a funnel or flexible container as shown in Figure 5.10. Add approximately 1.4 gal. (5.3 L) for each 5-foot (1.5 m) screen section, plus 0.9 gal. (3.4 L) for a minimum 2-foot (0.6 m) layer of sand above the screen section.

3. Measure the annulus depth after each 1,5 liters of sand. The sand may not fall all the way past the screen due to the tight annulus and possible water intrusion. This is acceptable, however, since the prepacked screens do not require the addition of sand. The important thing is that a sand barrier is provided <u>above</u> the screens.

4. Sand may also bridge within the annulus between the risers and probe rods and consequently fail to reach total depth (Fig. 5.10). This most likely occurs when the sand contacts the water table during deep well installations. Wet probe rods also contribute to sand bridging. If the annulus is open, skip to Section 5.5, Step 1. If bridging is evident, continue with Step 5.

5. In case of a sand bridge <u>above</u> the screens (wet rods, high water table, etc.), insert clean extension rods into the well annulus to break up the sand (Fig. 5.10). Simultaneously retracting the probe rods usually helps. Check annulus depth again. If sand is no longer bridged, proceed to Section 5.5. If bridging is still evident, continue with Step 6.

6. If the sand bridge cannot be broken up with extension rods, inject a small amount of clean water into the annulus using a Geoprobe GP300 or GP350 Grout Machine and 3/8-in. (9.5mm) OD polyethylene tubing. Simply insert the poly tubing down the well annulus until the sand bridge is contacted. Attach the tubing to the grout machine and pump up to one gallon of clean water while moving the tubing up and down. The jetting action of the water will loosen and remove the sand bridge. Check the annulus depth again. The distance should be 2 to 3 feet (0.6 to 0.9 m) less than the riser length. Proceed with Section 5.5.

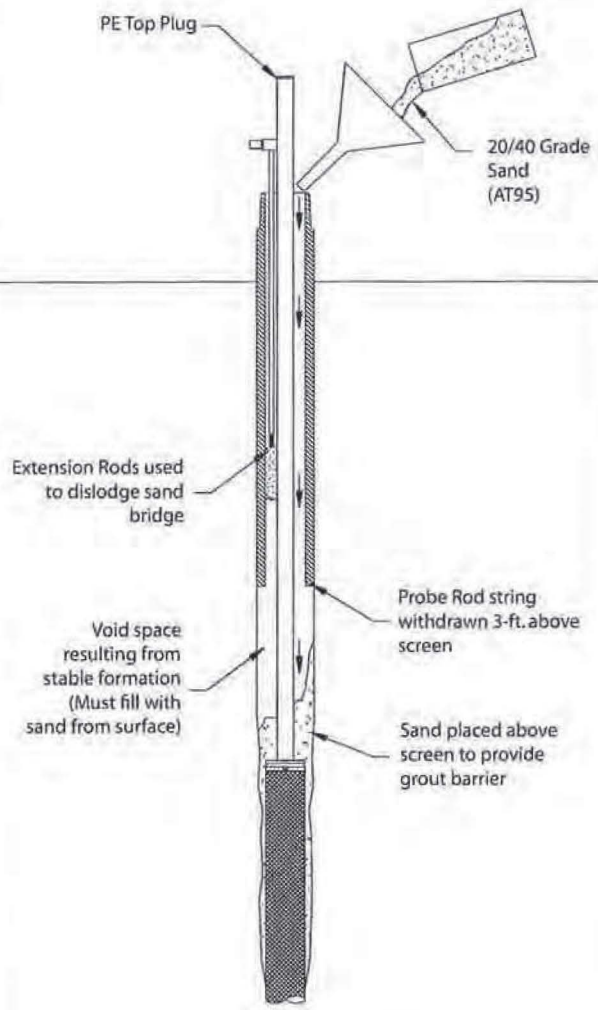


**FIGURE 5.10**
**Installing Grout Barrier from Ground Surface with 20/40 Grade Sand**

## 5.4 Bentonite Seal Above Screen

Bentonite is an expanding clay which exhibits very low permeability. When properly placed, bentonite prevents contaminants from moving into the well screens from above the desired monitoring interval. The seal is formed either by pouring granular bentonite into the annulus from the ground surface, or by injecting a high-solids bentonite slurry directly above the grout barrier. The use of granular bentonite is limited to cases in which the top of the screen ends above the water table (no water is present in the probe rods). Whichever method is used, at least 2 feet (0.6 m) of bentonite must be placed above the sand pack.

1. **Stable Formation.** Granular bentonite is recommended if the following conditions are met:
   - Top of screen interval is above the water table
   - Formation remained open when probe rods were retracted
   - Bridging was not encountered while installing sand for the grout barrier in Section 5.4

   **a)** Withdraw the probe rod string another 3 to 4 feet (0.9 to 1 m) and ensure that the PVC riser does not lift with the rods. It is important that the bottom of the rod string is above the proposed seal interval. If positioned too low, dry bentonite will backup into the expendable point holder. Bridging then results if moisture is present inside the probe rods.

   **b)** Pour bentonite between the probe rods and PVC riser as was done with the sand in Section 5.4. To properly hydrate the granular bentonite, it is necessary to periodically add water through a tremie tube while installing the bentonite. To accomplish this, repeat adding six inches of granular bentonite followed by 1.0 gallon (3.8 L) of water through a tremie tube until a minimum 2-foot (0.6 m) bentonite layer is created. Use the following procedure:

   i. Pour 0.8 liters of granular bentonite into the annulus. This volume of bentonite will fill approximately 6 inches (15 cm) of annular space.

   ii. Check for bridging inside the annulus. Measure the riser depth to the bottom of the annulus. The depth should equal the riser length minus the 2-foot sand pack and the added bentonite. If the measured depth is significantly less than expected, the bentonite has more than likely bridged somewhere inside the rod string. A procedure similar to that identified for bridged sand (Section 5.4, Steps 5 and 6) may be used to dislodge the granular bentonite.

   iii. Hydrate the bentonite by adding 1 gallon (3.8 L) of water to the annulus through a tremie tube. Do not pour water directly into the annulus. A tremie tube will help prevent bridging by keeping the rod string dry.

   iv. Repeat this procedure an additional three times or until the 2-foot (0.6 m) thick bentonite layer is completed.

2. **Unstable formation.** A grout machine is required to install the bentonite seal if the formation collapsed when the rods were retracted or the sand bridged when installing the grout barrier. The grout machine can pump a high-solids bentonite slurry under sufficient pressure to displace collapsing soil. Void spaces often develop when poured (gravity installed) granular bentonite is used under these conditions, resulting in an inadequate annular seal. Wet rods will often lead to bridging problems as well. Use the procedure on the following page to install a bentonite seal with a grout pump.

**a)** Mix 1.5 gallons (5.7 L) of high-solids bentonite (20 to 25 percent by dry weight) and place in the hopper of the grout machine.

**b)** Insert flexible tubing to the bottom of the annulus between the probe rods and well riser. Leaving at least 25 feet (8 m) extending from the top of the rod string, connect the tubing to the grout machine. This extra length will give needed slack for rod extraction (completed later in the procedure).

**NOTE:** The side-port tremie method is recommended to prevent intrusion of grout into the sand barrier. To accomplish side-port discharge of grout, cut a notch approximately one-inch (25 mm) up from the leading end of the tubing and then seal the leading end with a threaded plug of suitable size.

**c)** Reposition the probe unit and attach the 3.5-inc or 3.25-inch Rod Grip Puller.

**d)** Activate the pump and fill the tremie tube with bentonite. Begin slowly pulling the rod string approximately 3 feet (1.0 m) while operating the pump (Fig. 5.11). This will place bentonite in the void left by the retracted rods before it is filled by the collapsing formation. Continue to watch that the PVC riser does not come up with the rod string.

**NOTE:** When removing the retracted probe rod, slide the rod over the tremie tube and place it on the ground next to the grout machine. This eliminates cutting and reattaching the tubing for each rod removed from the string. Take care not to "kink" the tremie tube during this process as it will create a weak spot which may cause the tubing to burst when pressure is applied.

**e)** Measure the annulus depth to ensure that at least 2 feet (0.6 m) of bentonite was delivered. Pump additional bentonite slurry if needed.

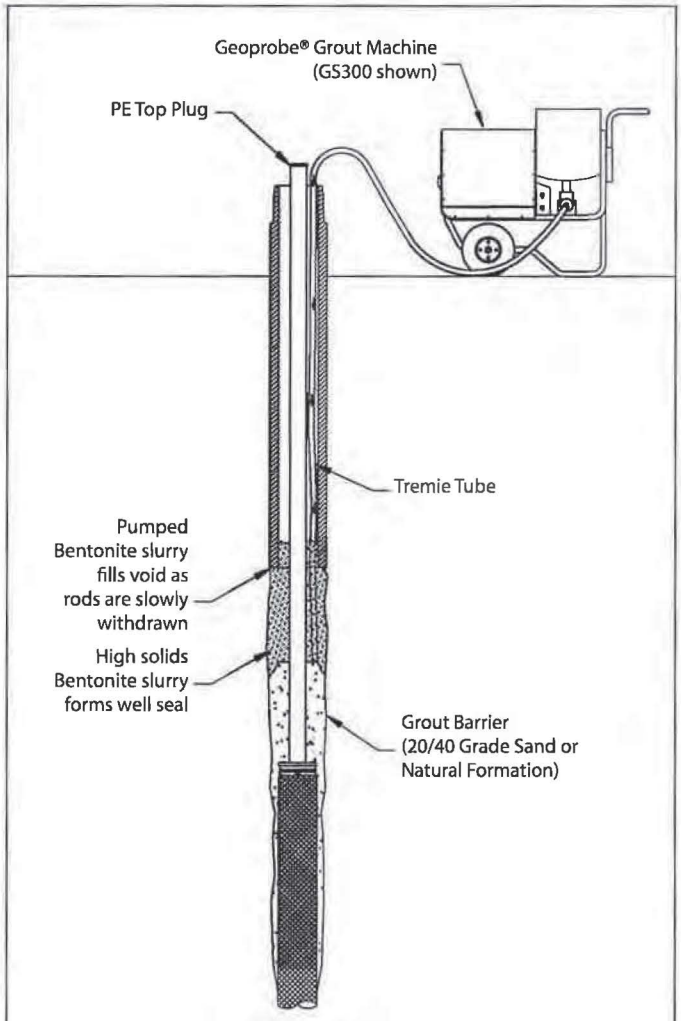


**FIGURE 5.11**
**Installing Bentonite Seal with Geoprobe® GS300 Grout Machine**

## 5.5 Grouting the well annulus

The placement of grout material within the remaining well annulus provides additional protection from vertical contaminant migration. Most grout mixes are composed of neat cement, high-solids bentonite slurry, or a combination of cement and bentonite. Such mixes must be delivered with a high-pressure grout pump. When stable formations exist, the well may be sealed by pouring dry granular bentonite directly into the annulus from the ground surface. Consult the appropriate regulatory agency to determine approved grouting methods. This section presents the procedure for grouting the well annulus with the Geoprobe Model GP300 or GP350 Grout Machine. Refer to Figure 5.12 as needed.

1. Mix an appropriate amount of grout material and place it in the hopper of the grout machine.

**NOTE:** It is recommended that an additional 20 to 25 percent of the calculated annulus volume be added to the total grout volume. This additional amount allows for grout that either remains in the grout hose or moves into the formation during pumping. Including the additional 20 percent, it will take approximately 0.54 gallons (2.0 L) of grout for each foot of riser below ground surface.

2. Insert tremie tube into the well annulus until the end of the flexible tubing reaches the top of the bentonite seal. Ensure that at least 25 feet (8 m) of tubing extends from the top of the rod string. This extra length allows rod retraction with the tubing attached to the pump.

3. Attach the tubing to the grout machine and begin pumping. If the bentonite seal was below the water table (deep well installation), water will be displaced and flow from the probe rods as the annulus is filled with grout. Continue operating the pump until undiluted grout flows from the top probe rod.

4. Reposition the probe unit and prepare to pull rods.

5. Begin pulling the probe rods while continuing to pump grout. Match the pulling speed to grout flow so that the rods remain filled to the ground surface. This maintains hydraulic head within the probe rods and ensures that the void left by the withdrawn rods is completely filled with grout.

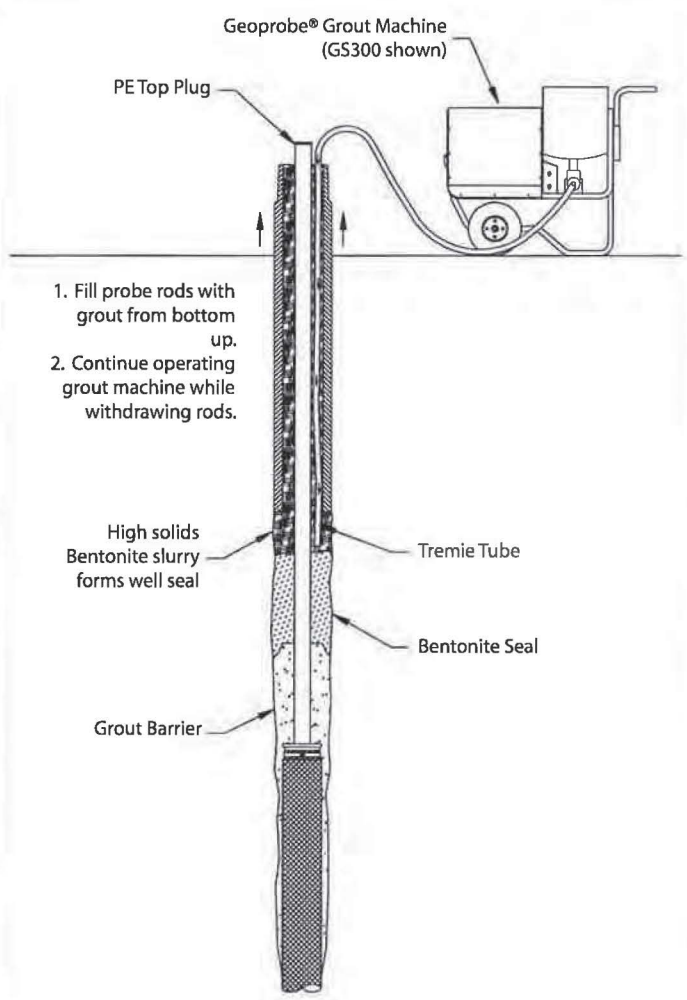


**FIGURE 5.12**
**Grouting Well Annulus with Geoprobe® GS300 Grout Machine**

**NOTE:** Slide the probe rods over the tremie tube and place neatly on the ground next to the grout machine. Be careful to not pinch or bind the flexible tubing as this forms weak spots which may burst when pressure is applied.

**NOTE:** Try to avoid filling the upper 12 inches (305 mm) of well annulus with grout when pulling the expendable point holder. This will make for a cleaner well cap installation.

6. When all probe rods have been retrieved and the well is adequately grouted, unstring the tremie tube and begin cleanup. It is important to promptly clean the probe rods, grout machine, and accessories. This is especially true of cement mixes as they quickly set up and are difficult to remove once dried.

## 5.6 Surface Cover/Well Protection

A surface cover protects the PVC well riser from damage and tampering. Although aboveground and flush-mount well covers may be used, most Geoprobe® monitoring wells have been installed with flush-mount covers (Fig. 5.13 - Page 24). Consult the project planners and/or appropriate regulators to determine the approved well cover configuration for your specific application.

1. In order to fit under a flush-mount cover, the top of the well riser must be below the ground surface. Place the well cover over the riser and push it into the ground to mark the cover diameter. Remove the cover and dig out approximately 6 inches (152 mm) of soil from within the cover mark.

2. Remove the PE top plug from the PVC riser. The top of the riser should be approximately 4 inches (102 mm) above the bottom of the hole. If a joint is near this level, unthread the top riser. If a joint is not positioned near the specified level, cut off the riser with PVC cutters.

**IMPORTANT: Do not cut off the riser with a hacksaw as cuttings will fall down into the screens.**

3. Insert a locking well plug into the top of the PVC riser. Tighten the center wing-bolt on the plug until it fits snugly within the riser. Secure the well plug by installing a padlock over one side of the wingbolt and through the hole provided on top of the plug.

4. Position the well cover so that it is centered over the PVC pipe. Push the cover into the ground using the machine foot if needed. Provide at least 0.5 inches (13 mm) of space between the top of the locking cap and bottom of the well cover lid. Do not push the cover so deep as to place the top of the lid below the surrounding ground surface.

5. Support the well cover by installing a concrete pad according to project requirements. Pads are commonly square-shaped with a thickness of 4 inches (102 mm) and sides measuring 24 inches (610 mm) or greater. Finish the pad so that the edges slope away from the center to prevent ponding of surface water on the well cover.

6. Fill the inside of the well cover with sand up to approximately 2 to 3 inches (51 to 76 mm) from the top of the PVC riser.

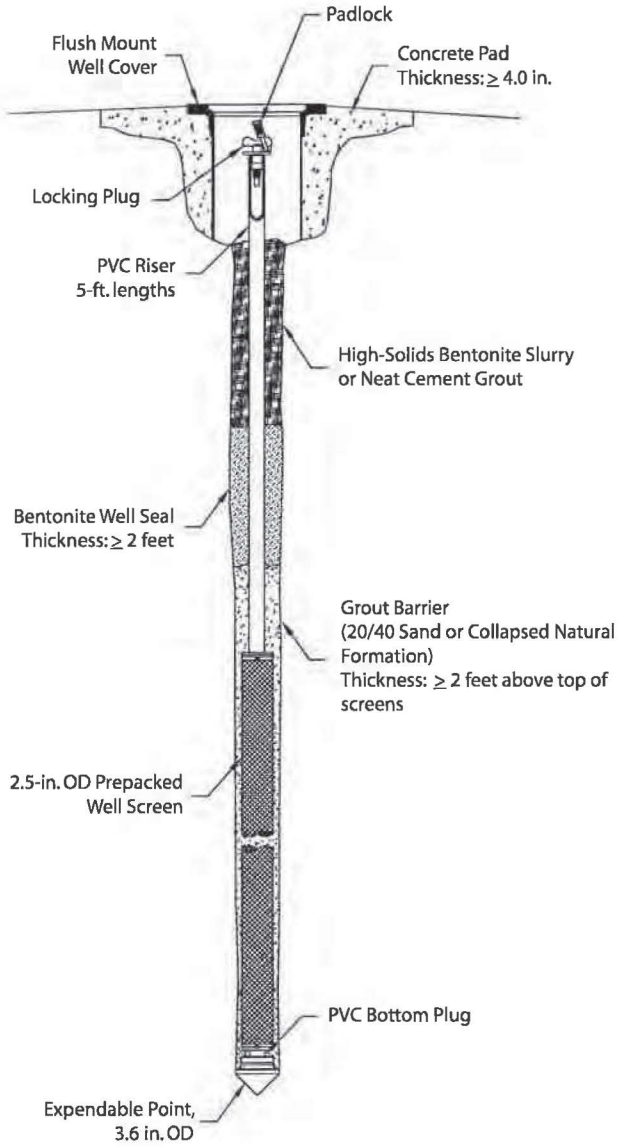


**FIGURE 5.13**
**Properly Installed Geoprobe® 2.5-in. OD Prepacked Screen Monitoring Well**

## 6.0 WELL DEVELOPMENT

"The development serves to remove the finer grained material from the well screen and filter pack that may otherwise interfere with water quality analyses, restore groundwater properties disturbed during the installation (probing) process, and to improve the hydraulic characteristics of the filter pack and hydraulic communication between the well and the hydrologic unit adjacent to the well screen," (ASTM D 5092).

The two most common methods of well development are purging (bailing or pumping) and mechanical surging.

**6.1** **Purging** involves removing at least three well volumes of water with either a Tubing Bottom Check Valve (Fig. 6.1), Stainless Steel Mini-Bailer Assembly, Well Development Tool or Mechanical Bladd Pump. Include the entire 3.6-inch (91 mm) diameter of disturbed soil at the screen interval when calculating the well volume.

**6.2** **Mechanical Surging** uses a surge block which is attached to extension rods and lowered inside the riser to the screen interval. The extension rods and surge block are moved up and down, forcing water into and out of the screen. Water and loosened sediments are then removed using one of three methods listed in 6.1.

**IMPORTANT:** **Mechanical surging may damage the well screen and/or reduce groundwater flow across the filter pack if performed incorrectly or under improper conditions. Refer to ASTM D 5521, "Standard Guide for Development of Groundwater Monitoring Wells in Granular Aquifers" for a detailed discussion of mechanical surging.**

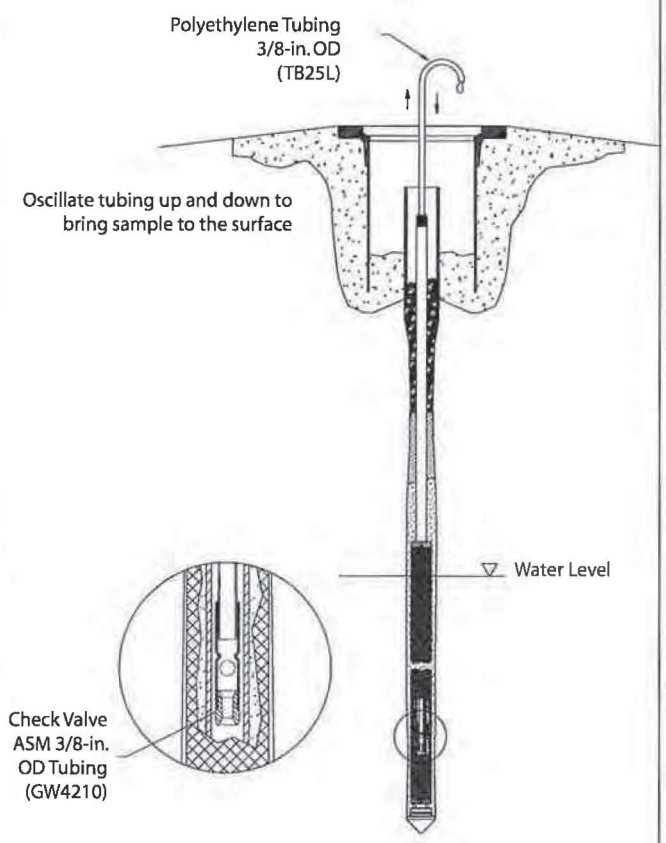


**FIGURE 6.1**
**Sampling with Polyethylene Tubing and a Tubing Bottom Check Valve**

Development should continue until consecutive samples yield representative water. "Representative water is assumed to have been obtained when pH, temperature, and specific conductivity readings stabilize and the water is visually clear of suspended solids," (ASTM D 5092).

## 7.0 SAMPLE COLLECTION

As the federal EPA and more state agencies are recommending or requiring use of the "low-flow" sampling protocol (EPA 1996), the ability to sample small-diameter, direct push (DP) installed monitoring wells with bladder pumps has significantly increased. The latest option for collecting groundwater is to utilize a Geoprobe® MB470 Mechanical Bladder Pump. It may be used to meet requirements of the low-flow sampling protocol (EPA 1996). The low-flow sampling method is preferred when sampling for volatile contaminants or metal analytes. The Mechanical Bladder Pump can be used with any of the available flow-through-cells and water quality monitoring probes. Smaller volume flow-through-cells are recommended when available. Use of the Mechanical Bladder Pump and flow-through-cell allows you to meet the stringent requirements for monitoring pH, specific conductance, DO, and ORP, and obtaining low-turbidity samples for metals analysis.

Groundwater samples may be collected with a check valve assembly (with 3/8-inch OD poly tubing as shown in Fig. 6.1) or a stainless steel mini-bailer assembly when appropriate. While the check valve is the quicker and more economical sampling device, some operators still prefer the traditional mini-bailer.

Before going into the field to sample monitoring wells (or groundwater samplers), be sure to know the level of sample quality that will be required. For high-integrity samples that must meet strict data quality objectives, sampling with a mechanical bladder pump may be required. Conversely, if screening level data is required (is it there and about how much?) a check valve assembly may be sufficient and could save time and money. For further information on this topic, request the Geoprobe® bulletin titled *Groundwater Quality and Turbidity vs. Low Flow.*

## 8.0 REFERENCES


American Society for Testing and Materials (ASTM), 1992. ASTM D 5092 *Standard Practice for Design and Installation of Ground Water Monitoring Wells in Aquifers.* ASTM West Conshohocken, PA.

American Society for Testing and Materials (ASTM), 1995. ASTM D 5521 *Standard Guide for Development of Ground Water Monitoring Wells in Granular Aquifers.* ASTM West Conshohocken, PA.

American Society for Testing and Materials (ASTM), 2002. ASTM D 6724 *Standard Guide for Selection and Installation of Direct Push Ground Water Monitoring Wells.* ASTM West Conshohocken, PA.

American Society for Testing and Materials (ASTM), 2002. ASTM D 6725 *Standard Practice for Direct Push Installation of Prepacked Screen Monitoring Wells in Unconsolidated Aquifers.* ASTM West Conshohocken, PA.

Geoprobe Systems®, 2003. *Tools Catalog, V. 6.*

U.S. Environmental Protection Agency (EPA), 1996. Robert W. Puhls and Michael J. Barcelona. *Ground Water Issue: Low-Flow (Minimal Drawdown) Ground-Water Sampling Procedures.* OSWER. EPA/540/S-95/504. April.

U.S. Environmental Protection Agency (EPA), 1997. *Expedited Site Assessment Tools For Underground Storage Tank Sites: A Guide for Regulators.* EPA 510-B-97-001. March, 1997.

## APPENDIX A
## ALTERNATIVE PARTS

| Groundwater Purging and Sampling Accessories | Part Number |
|---|---|
| Polyethylene Tubing, 0.25-inch OD, 500 ft. | TB17L |
| Polyethylene Tubing, 0.5-inch OD, 500 ft. | TB37L |
| Polyethylene Tubing, 0.625-inch OD, 50 ft. | TB50L |
| Check Valve Assembly, 0.25-inch OD Tubing | GW4240 |
| Check Valve Assembly, 0.5-inch OD Tubing | GW4220 |
| Check Valve Assembly, 0.625-inch OD Tubing | GW4230 |
| Well Development Tool 1.5-inch | 34558 |
| Well Development Tool 1.0-inch | 35364 |
| Water Level Meter, 0.375-inch OD Probe, 100-ft. cable | GW2001 |
| Water Level Meter, 0.438-inch OD Probe, 200 ft. cable | GW2002 |
| Water Level Meter, 0.375-inch OD Probe, 200-ft. cable | GW2003 |
| Water Level Meter, 0.438-inch OD Probe, 30-m cable | GW2005 |
| Water Level Meter, 0.438-inch OD Probe, 60-m cable | GW2007 |
| Water Level Meter, 0.375-inch OD Probe, 60-m cable | GW2008 |

**Additional Tools, Equipment, and Supplies**

Locking Pliers
Pipe Wrench
Volumetric Measuring Cup
PVC Cutting Pliers
Weighted Measuring Tape (optional)
Small Funnel or Flexible Container (for pouring sand)
Duct or Electrical Tape Roll
Bucket or Tub (for dry grout material, water, and mixing)
Portland Cement, Type I
Concrete Mix (premixed cement and aggregate)
Clean Water (of suitable quality for exposure to well components)

Equipment and tool specifications, including weights, dimensions, materials, and operating specifications included in this brochure are subject to change without notice. Where specifications are critical to your application, please consult Geoprobe Systems®.

Geoprobe Systems®

A DIVISION OF KEJR, INC.

**Corporate Headquarters**
1835 Wall Street • Salina, Kansas 67401
1-800-GEOPROBE (1-800-436-7762) • Fax (785) 825-2097
www.geoprobe.com

GET THE LATEST VERSION OF THIS DOCUMENT

Designation: D 6724 – 04

# Standard Guide for Installation of Direct Push Ground Water Monitoring Wells[1]

This standard is issued under the fixed designation D 6724; the number immediately following the designation indicates the year of original adoption or, in the case of revision, the year of last revision. A number in parentheses indicates the year of last reapproval. A superscript epsilon (ϵ) indicates an editorial change since the last revision or reapproval.

## 1. Scope

1.1 This guide describes various direct push ground water monitoring wells and provides guidance on their selection and installation for obtaining representative ground water samples and monitoring water table elevations. Direct push wells are used extensively for monitoring ground water quality in unconsolidated formations. This guide also includes discussion of some groundwater sampling devices which can be permanently emplaced as monitoring wells.

1.2 This guide does not address the single event sampling of ground water using direct push water samplers as presented in Guide D 6001. The methods in this guide are often used with other tests such as direct push soil sampling (Guide D 6282) and the cone penetrometer test (Guide D 6067). The present guide does not address the installation of monitoring wells by rotary drilling methods such as those presented in Practice D 5092. Techniques for obtaining ground water samples from monitoring wells are covered in Guide D 4448.

1.3 The installation of direct push ground water monitoring wells is limited to unconsolidated soils and sediments including clays, silts, sands, and some gravels and cobbles. Penetration may be limited, or damage may occur to equipment, in certain subsurface conditions; some of which are discussed in 5.5. Information in this guide is limited to ground water monitoring in the saturated zone.

1.4 This guide does not purport to comprehensively address all of the methods and issues associated with monitoring well installation. Users should seek input from qualified professionals for the selection of proper equipment and methods that would be the most successful for their site conditions. Other methods may be available for monitoring well installation, and qualified professionals should have flexibility to exercise judgement concerning alternatives not covered in this guide. The practice described in this guide is current at the time of issue; however, new, alternative, and innovative methods may become available prior to revisions. Therefore, users should consult with manufacturers or producers prior to specifying program requirements.

1.5 This guide offers an organized collection of information or a series of options and does not recommend a specific course of action. This document cannot replace education or experience and should be used in conjunction with professional judgement. Not all aspects of this guide may be applicable in all circumstances. This ASTM standard is not intended to represent or replace the standard of care by which the adequacy of a given professional service must be judged, nor should this document be applied without consideration of a project's many unique aspects. The word "Standard" in the title of this document means only that the document has been approved through the ASTM consensus process.

1.6 *This standard does not purport to address all of the safety concerns, if any, associated with its use. It is the responsibility of the user of this standard to establish appropriate safety and health practices and determine the applicability of regulatory requirements prior to use.*

## 2. Referenced Documents

2.1 *ASTM Standards:* [2]

D 653 Terminology Relating to Soil, Rock, and Contained Fluids

D 4448 Guide for Sampling Ground Water Monitoring Wells

D 4750 Test Method for Determining Subsurface Liquid Levels in a Borehole or Monitoring Well (Observation Well)

D 5088 Practice for Decontamination of Field Equipment Used at Non-Radioactive Waste Sites

D 5092 Practice for Design and Installation of Ground Water Monitoring Wells in Aquifers

D 5254 Practice for Minimum Set of Data Elements

D 5299 Guide for Decommissioning Monitoring Wells, Vadose Zone Monitoring Devices, Boreholes, and Other Devices for Environmental Activities

D 5434 Guide for Field Logging of Subsurface Explorations of Soil and Rock

D 5474 Guide for Selection of Data Elements for Ground Water Investigation

[1] This guide is under the jurisdiction of ASTM Committee D18 on Soil and Rock and is the direct responsibility of Subcommittee D18.21 on Ground Water.

Current edition approved July 1, 2004. Published July 2004. Originally approved in 2001. Last previous editon approved in 2001 as D 6724–01.

[2] For referenced ASTM standards, visit the ASTM website, www.astm.org, or contact ASTM Customer Service at service@astm.org. For Annual Book of ASTM Standards volume information, refer to the standard's Document Summary page on the ASTM website.

Copyright © ASTM International, 100 Barr Harbor Drive, PO Box C700, West Conshohocken, PA 19428-2959, United States.

D 5521 Guide for Development of Ground Water Monitoring Wells in Granular Aquifers
D 5730 Guide for Site Characterization for Environmental Purposes with Emphasis on Soil, Rock, the Vadose Zone, and Ground Water
D 6001 Guide for Direct Push Water Sampling for Geoenvironmental Investigations
D 6067 Guide for Electronic Cone Penetrometer Testing for Environmental Site Characterization
D 6282 Guide for Direct Push Soil Sampling for Environmental Site Characterization
D 6286 Guide for Selection of Drilling Methods for Environmental Site Characterization
D 6452 Guide for Purging Methods for Wells Used for Groundwater Quality Investigations
D 6564 Guide for Field Filtration of Ground Water Samples
D 6634 Guide for the Selection of Purging and Sampling Devices for Ground Water Sampling Wells
D 6771 Practice for Low-Flow Purging and Sampling for Wells and Devices Used for Ground-Water Quality Investigations

## 3. Terminology

3.1 Terminology used within this standard is in accordance with D 653.

## 4. Summary of Guide

4.1 This guide provides information to be used by experienced ground water professionals for investigation of the subsurface and ambient ground water conditions.

4.2 This guide outlines a variety of field methods for installing direct push ground water monitoring wells. Installation methods include: (*1*) soil probing using combinations of dynamic (percussion or vibratory) driving with, or without, additions of static (constant) force; ( ) static force from the surface using hydraulic penetrometer or drilling equipment; and ( ) incremental drilling combined with direct push methods. Methods for installation of annular seals and annular grouts are also discussed as well as abandonment grouting.

4.3 This guide addresses considerations for selection and use of direct push well systems and installation techniques that may be classified into two main categories; exposed screen techniques and protected screen techniques. In exposed screen techniques, the screened casing may serve as the drive rod, or may surround a drive rod that is removed following installation. In protected screen techniques, the well may be advanced along with a protective outer casing, or may be lowered into a driven casing that is subsequently removed. Alternatively, the screen, riser, and a retractable shield may be driven simultaneously and all remain in the ground.

4.4 The interval to be tested is determined in advance by prior investigation, or by soil or water sampling during direct push driving. A screen section, either protected or unprotected, is connected to riser pipes and either driven on the outside of, or placed inside of direct push rods. With some monitoring well designs, it may be necessary to add sand pack and seals to isolate the screened test zone as the rods are retracted. The top of the installation is usually completed in a manner consistent with regulatory requirements. The well can be developed to remove mobile sediments. Water levels can be measured, and water samples are taken as required in the sampling plan.

## 5. Significance and Use

5.1 The direct push ground method is a rapid and economical procedure for installing ground water monitoring wells to obtain representative ground water samples and location-specific hydrogeologic measurements. Direct push installations may offer an advantage over conventional rotary drilled monitoring wells (Practice D 5092) for ground water investigations in unconsolidated formations because they reduce disturbance to the formation, and eliminate or minimize drill cuttings. At facilities where contaminated soils are present, this can reduce hazard exposure for operators, local personnel, and the environment, and can reduce investigative derived wastes. Additionally, smaller equipment can be used for installation, providing better access to constricted locations.

5.2 Direct push monitoring wells generally do not extend to depths attainable by drilling. They are also typically smaller in diameter than drilled wells, thereby reducing purge water volumes, sampling time, and investigative derived wastes. Practice D 5092 monitoring wells are used when larger diameters and/or sample volumes are required, or at depths to which it is difficult to install direct push wells. Direct push monitoring wells should be viable for monitoring for many years.

5.3 Prior to construction and installation of a direct push well or any other type of ground water well the reader should consult appropriate local and state agencies regarding regulatory requirements for well construction in the state. A regulatory variance may be required for installation of direct push monitoring wells in some states.

5.4 To date, published comparison studies between drilled monitoring wells and direct push monitoring wells have shown comparability **(1, 2, 3, 4, 5)**. However, selection of direct push monitoring wells over conventional rotary drilled wells should be based on several criteria, such as site accessibility and penetrability, stratigraphic structure, depth to groundwater, and aquifer transmissivity.

5.5 Typical penetration depths for installation of ground water monitoring wells with direct push equipment depend on many variables. Some of the variables are the size and type of the driving system, diameter of the drive rods and monitoring well, and the resistance of the earth materials being penetrated. Some direct push systems are capable of installing ground water monitoring wells to depths in excess of 100 feet, and larger direct push equipment, such as the vibratory sonic type drill (Guide D 6286) are capable of reaching much greater depths, sometimes in excess of 400 ft. However, installation depths of 10 to 50 feet are most common. Direct push methods cannot be used to install monitoring wells in consolidated bedrock (for example, granite, limestone, gneiss), but are intended for installation in unconsolidated materials such as clays, silts, sands, and some gravels. Additionally, deposits containing significant cobbles and boulders (for example, some glacial deposits), or strongly cemented materials (for example, caliche) are likely to hinder or prevent penetration to the desired monitoring depth.

5.6 For direct push methods to provide accurate ground water monitoring results, precautions must be taken to ensure

that cross-contamination by "smearing" or "drag-down" (that is, driving shallow contamination to deeper levels) does not occur, and that hydraulic connections between otherwise isolated water bearing strata are not created. Similar precautions as those applied during conventional rotary drilling operations (Guide D 6286) should be followed.

5.7 There have been no conclusive comparisons of effectiveness of sealing between drilled monitoring wells and direct push monitoring wells. As with drilled monitoring wells, sealing methods must be carefully applied to be effective.

5.8 Selection of direct push monitoring wells versus conventional rotary drilled monitoring wells should be based on many issues. The advantages and disadvantages of the many available types of driving equipment and well systems must be considered with regard to the specific site conditions. Specific well systems and components, as well as direct push driving equipment, are described in Section 7.

5.9 *Advantages*:

5.9.1 Minimally intrusive and less disturbance of the natural formation conditions than many conventional drilling techniques.

5.9.2 Rapid and economical.

5.9.3 Smaller equipment with easier access to many locations.

5.9.4 Use of shorter screens can eliminate connections between multiple aquifers providing better vertical definition of water quality than long well screens.

5.9.5 Generates little or potentially no contaminated drill cuttings.

5.9.6 Less labor intensive than most conventional drilling techniques.

5.10 *Disadvantages*:

5.10.1 Cannot be used to install monitoring devices in consolidated bedrock and deposits containing significant cobbles and boulders.

5.10.2 Small diameter risers and screens limit the selection of useable down-hole equipment for purging and sampling.

5.10.3 Difficulty installing sand pack in small annular space if gravity installation of sand pack is used.

5.10.4 Difficulty installing grout in same annular space unless appropriately designed equipment is used.

## 6. Pre- nstallation Considerations

6.1 *Site Characterization*—Successful installation of direct push ground water monitoring wells must be preceded by appropriate site characterization activities. These activities may include reconnaissance, research, conceptual model development, exploratory field investigations, and confirmation and re-evaluation of any existing flow models.

6.2 For the installation to be successful, it is imperative that the target aquifer be located accurately. As with any well installation, the geologic conditions must be understood and the stratigraphy must be known. Although direct push wells can monitor thinner aquifers, with more precision, they may be ineffective is incorrectly placed. In thicker aquifers, and when seeking dense non-aqueous phase liquids, screens may need to be located in the bottom of the water-bearing stratum. Wells placed without determination of nearby geologic conditions can be ineffective and possibly dangerous. Geologic investigations should look for perched aquifers and use installation methods which will avoid any crosscontamination of the unit.

6.3 Environmental site characterization approaches are described in Guide D 5730. Proper site characterization for monitoring well placement is reviewed in Practice D 5092 on Monitoring Well Design.

6.3.1 *Characterization Tools*—In geologic settings amenable to the use of direct push ground water monitoring wells, other direct push methods and tools can likely also be used to effectively characterize the site. For example, the Cone Penetrometer Test (CPT) (Guide D 6067) is an effective tool for mapping stratigraphy and locating target layers. Other sensors, such as electrical conductivity and optical detectors have been placed on CPT and other direct push systems. Direct push soil sampling (Guide D 6282) and water sampling (Guide D 6001) can be used in advance to locate strata of concern. Direct push characterization experience at a site can guide the user in well design or device selection.

6.3.2 *Sampling During Installation*—Many direct push systems can take soil or water samples as part of the well installation process. For example, two-tube systems described in direct push soil sampling Guide D 6282 can be used to collect soil samples while driving. When the target aquifer is reached, the well screen system can be installed in the casing. Sampling data taken prior to well installation can confirm the target stratum has been reached.

6.3.3 *Sampling Systems*—There is a wide variety of direct push ground water sampling systems which can also be used for ground water monitoring. Direct push water sampling Guide D 6001 describes exposed screen versus protected screen samplers. Guide D 6282 describes the differences in two-tube and single-rod direct push soil sampling systems.

6.4 *Access and Clearances*—The selection of driving equipment should consider the accessability of the installation site. The site should be surveyed for accessibility. Utility clearances may be required. Certain driving methods are incompatible with nearby hazards (for example, flammables). Also check for overhead utility lines during the site survey.

6.5 *Well Size Selection*—Driving resistance can govern the selection of an appropriate well diameter. Driving resistance can be evaluated by direct push testing on the site prior to well installation. Larger diameter monitoring wells may be easy to install on soft or loose ground sites. Smaller diameter monitoring wells may facilitate deeper installation on sites that are more resistant to penetration, but also present additional considerations for use as discussed below.

6.5.1 The availability of appropriate well development and sampling equipment for use in small-diameter monitoring wells may be limited. Many conventional down-hole pumps for purging and sampling are too large for use in small-diameter screens and risers.

6.5.2 Small diameter monitoring wells, because they are generally less rigid than larger diameter monitoring wells, require special attention during backfilling to maintain vertical alignment. This may include the use of centralizers.

## 7. Direct Pus ells Systems and Components

7.1 *Drive Rod and Casing*—In some instances the well itself may serve as the drive rod. Otherwise, it either surrounds

the well casing or is contained within it diuring installation, and is then removed. Direct push drive rod is typically constructed of steel in threaded sections. Lengths of 3.3 ft or 5 ft are common. The diameter selected will depend on the driving resistance of the soil and well size considerations. Consult experienced area contractors or qualified manufacturers to select the appropriate diameters for the site. Drive rods used inside of casings range from 0.5 to 1.25 in. in diameter. Outer drive casings of up to 4.5-in. diameter have been used at relatively soft or loose soil sites allowing installation of 2-in. screen/riser assemblies. The most common casing sizes are 2 to 3 in. Large drive rods can be advanced with large vibratory drills (Guide D 6286). Threaded sections can be outfitted with o-ring seals or PFTE tape to reduce ground water infiltration. Drive casings are equipped with expendable steel or aluminum drive points that are left in the bottom of the well.

7.2 *Well Screen and Riser Pipe*—Slotted PVC with flush-joint riser pipe is commonly used in the installation of direct push monitoring wells. Sizes range from $\frac{1}{2}$ in. to 2 in. (Schedules 40 and 80). Other riser screen and riser materials such as stainless steel, polyethylene, or PTFE may be used. PVC is preferred due to its low cost and because it is relatively inert. Selection of well material should consider possible material interactions with the contaminant being monitored. While PVC and Stainless steel are commonly used in most monitoring wells without any problem, there are extreme environmental conditions that could lead to failure of these materials. PVC should not be exposed to neat organic solvents (that is, pure products) that are PVC solvents or swelling agents or to extremely high concentrations of these chemicals (approaching a saturated solution) **(5, 6, 7, 8, 9, 10)**. Although there is very little data on the expected life of steel well casings **(11)**, stainless steel is reported to perform well in most environments **(11, 12, 13)**. Stainless steel should be avoided in extremely corrosive conditions, which may include water high in chlorides, low in pH, high in dissolved solids or high in dissolved oxygen **(14, 15, 16, 17)**. As screen and riser pipe may contain chemical residue from manufacturing, the screen and riser should be cleaned prior to installation. Threads of the riser pipe can be sealed with O-rings or by using PTFE tape.

7.2.1 Slotted (PVC) or wire-wrapped (steel) well screen is normally supplied with slot widths of 0.01 or 0.02 in. The screen can be wrapped with stainless steel wire mesh of 0.006 in. opening. The selection of slot size depends on the formation grain size distribution and if a sand pack will be needed to reduce turbidity. Practice D 5092 provides slot size and sand pack selection criteria.

7.2.2 A sediment trap may be specified. If the riser is lifted and needs to be pushed back into place, pointed sediment traps are useful.

7.3 *Sand Pack*—The use of sand packs assists in reducing turbidity and the amount of well development required to obtain low turbidity samples. Monitoring wells without sand packs will likely yield more turbid water, which may impact the results of some chemical analyses. However, a filter can be as thin as several grain diameters to be effective. Improving well yield is not the purpose of the sand pack; yield is controlled by the formation. For monitoring of metals, filtering of samples (Guide D 6564) may be required for samples with elevated turbidity levels.

7.3.1 *Sand Pack Selection and Size Range*—Formations of clean sands and gravels (that is, less than 5 fines) may not require a sand pack. For soil containing appreciable fines, use of a sand pack should be considered. The gradation requirement depends on the particle size distribution in the target aquifer. Refer to Practice D 5092 for criteria on sand pack design.

7.3.2 *Pre-packed Screens*—Pre-packed screen systems are intended to ease the installation of sand in direct push cased monitoring wells by carrying it with the casing. The prepack sections use hollow stainless steel screen casings to accommodate the slotted riser. A screen opening of 0.006 in. is typical.

7.4 *Seals*—In addition to the sand pack, a seal above the screen is needed. Current state regulations and EPA guidance documents **(18, 19, 22)** require the installation of annular seals and grouting of the well annulus to prevent potential cross contamination along the well bore and the possibility of surface water or chemical spills from contaminating the monitored aquifer(s). Sealing is necessary to prevent infiltration of surface runoff and to maintain the hydraulic integrity of confining layers. The sealing required depends on the formation, well type, and installation technique (Section 8). Several methods can be used to assure a seal above the screened zone. Most completion methods with cased systems use tremie grout placed as the casing is withdrawn. The grout can be bentonite or cement similar to that specified in Guides D 6001, D 6282, and Practice D 5092. A typical well completion diagram is shown on Fig. 1. A grout barrier of fine to medium sand is used to protect the sand pack or screened interval from infiltration of grout, which can change the local water chemistry. Practice D 5092 addresses this subject.

7.4.1 Mechanical techniques can also be used to create an effective seal. For example, Fig. 2 depicts a solid metal sleeve left in the ground, and Fig. 3 shows modular expandable foam

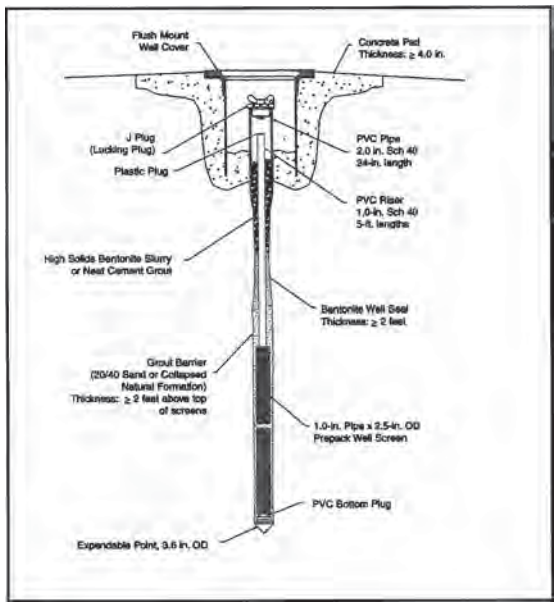


**FIG. 1 Example of a Completed Direct Push Monitoring Well (20)**

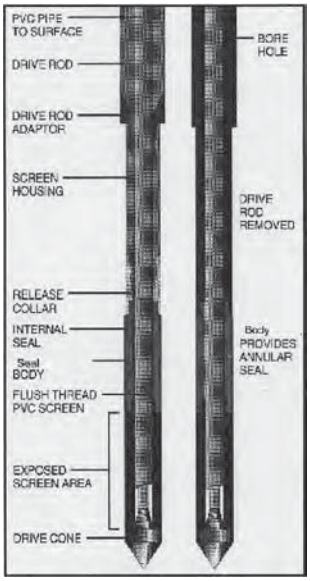


**FIG. 2 Example of a Steel Seal Body Above the Screen**

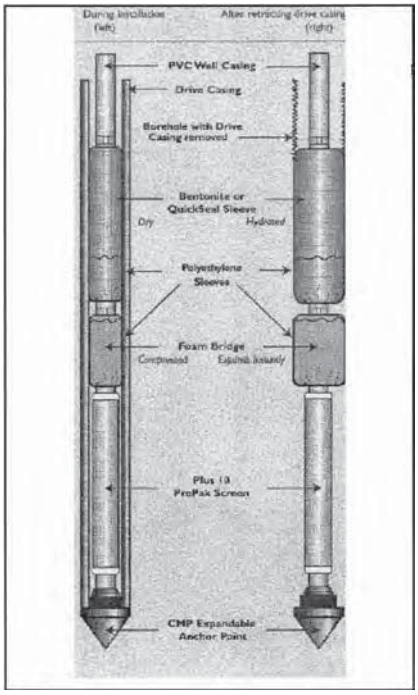


**FIG. 3 Direct Push Well with Modular Sealing Components**

and bentonite sleeves used above the screened interval. Rubber wiper seal may also be used. Whether this barrier is formed by the addition of fine to medium sand, by collapse of the surrounding formation, or mechanically, the materials employed must be chosen to be compatible with the local groundwater conditions and contaminants of interest.

7.5 *Modular Well Systems*—The most recent developments have been towards the use of modular components for placing sand pack and seals. Pre-packed screens can be used with most drive systems. The screens are stainless steel wire mesh filled with sand of different gradations. Fig. 3 shows the use of these modular sand packs.

7.6 *Other Variations*—Numerous innovations have been developed for ground water monitoring through direct push well systems. For example, multiple screened sections can be completed in one installation, and sampling of multiple zones can be performed by using packers or sampling ports for ground water extraction. Another recent development has been the use of everting flexible sock system liners to seal the borehole and isolate a water sampling interval **(21)**.

## 8. nstallation Tec ni ues

8.1 There are several techniques for installing direct push monitoring wells. Techniques can be broadly classifieds into two categories: exposed screen techniques, and protected screen techniques. Each of the systems described hereafter may require a unique installation procedure. Regardless of the choice of techniques and systems, a written operating procedure should be developed which allows some flexibility in response to field conditions. Project sampling plans and standard operating procedures should be consulted prior to installation.

8.2 *Direct Push Driving Equipment*—Direct push Guides D 6001 and D 6282 describe typical driving systems. Some systems are manual (slam bar, hand held electric or pneumatic hammers), static weight (cone penetrometers), percussion (hydraulic hammers, air hammers, electric hammers), and vibratory systems. In some cases, direct push monitoring wells may be installed in combination with rotary drilling.

8.3 *Exposed Screen Techniques*—One method of installing direct push wells is to advance a screen and riser of constant diameter that remain in direct contact with the formation during installation. The riser may be driven either alone or by using a mandrel rod inside the screen and riser (Fig. 4). Because the well screen is exposed to soil during driving, development by surging or jetting will be necessary to remove sediment from the screen slots (see Guide D 5521 for well development methods). When installing exposed screen monitoring wells the slotted screens may become clogged with fine-grained materials if any are present in the penetrated

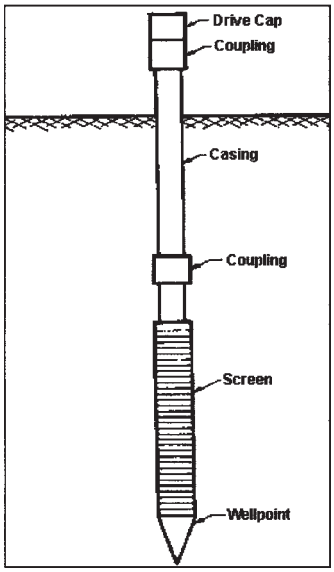


**FIG. 4 Example of an Exposed Screen Driven Well Point (11)**

formation. If the zone penetrated with the slotted screens is contaminated the materials trapped in the screens may be contaminated and result in cross contamination of the screened interval. Additional development may be required to remove the material clogged in the screens. Failure to remove such material may bias sample quality.

8.3.1 *Driven or  etted Wellpoints*—As is commonly practiced in other hydrology applications (for example, construction site dewatering), well points can be jetted or driven (hammer or vibration) through sands. Fig. 4 shows this simple type of installation. At many saturated sand sites, the well point can be quickly driven using vibrators or vibratory hammers. Well points are generally 2 to 3 in. diameter and constructed of slotted or wire-wrapped steel or stainless steel. Slot widths of 0.01 to 0.02 in. are typical. These monitoring wells perform well in clean, coarse to medium sand deposits, but they do not have a sand pack and will yield sediment in soils containing fines. The use of jetting will reduce effective sealing above the screen. Installation by jetting with water or other fluids is not recommended for environmental water quality monitoring wells, as injection of large volumes of fluids into the local formation will result in significant alteration of the local ground water geochemistry.

8.3.2 *Mandrel-Driven Screen and Riser*—Fig. 5 shows a section of poly vinyl chloride (PVC) screen and riser that is driven using inner steel CPT rods. A drive tip slightly over-reams the hole to reduce friction on the riser pipes. Through experience, the drive tip diameter can be optimized to assure good sealing above the screen. With this type of installation, rigorous development to remove possible cross-contamination must be performed. A combination of mechanical surging and continuous withdrawal of the well water is effective for this purpose. See Guide D 5521 for well development guidance.

8.4 *Protected Screen Techniques*—Protected screen techniques do not allow the well screen to come in contact with the formation until the screened section is at the target installation depth. The well is driven inside of a protective outer casing, or lowered down into the casing once it has been driven to the desired depth. A variety of sand pack and sealing approaches are available, as discussed in subsequent sections. There may be difficulty in installing sand pack or grout in the annular space that is created. However, the use of pre-packed well screens facilitates the quick and accurate placement of the sand pack. Additionally, new grouting technology allows for efficient and accurate placement of seals and grout by the bottom-up tremie method recommended by EPA guidance **(11, 18, 19)** and most state regulatory agencies.

8.4.1 *Single Rod Wells*—Guide D 6001 describes rod-driven water samplers which can be driven and left in place as monitoring points without backfilling. Fig. 6 shows a typical rod-driven water sampler. If the drive rod is smaller in diameter than the sampler body, surface infiltration can be prevented by grouting the annular space above the sampler body. Otherwise, the only seal will be between the formation and that portion of sampler body above the screen. If the annulus between the drive rod and soil remains unsealed, such installations are satisfactory only for monitoring the uppermost portions of surficial aquifers, and where potential contamination by infiltration from above is not a concern. Most conventional direct push water samplers of this type are typically not left in the ground for long periods due to equipment expense. However, low-cost versions of these samplers are available and can be used for long-term installations.

8.4.2 *Two-Tube Systems*—Many protected screen direct push monitoring wells are installed by first advancing the outer tube to the bottom of the desired screen interval. Then the screen(s) and riser are assembled and lowered through the open bore of the probe rods. Following this, the outer tube is retracted while the screen(s) and riser remain in place. The grout barrier, annular seal and grout are then installed by appropriate methods. With non-percussive driving systems the screen and riser may be advanced along with the protective casing without risking damage. Monitoring wells installed using a two-tube system are similar to rotary monitoring wells (Practice D 5092) in that they can contain a sand pack, seal, and annulus sealing to the surface. The well assembly may include a pre-fabricated sand pack or other modular components as illustrated in Fig. 7. By using the protective casing, the well can be installed through multiple aquifers. The well may

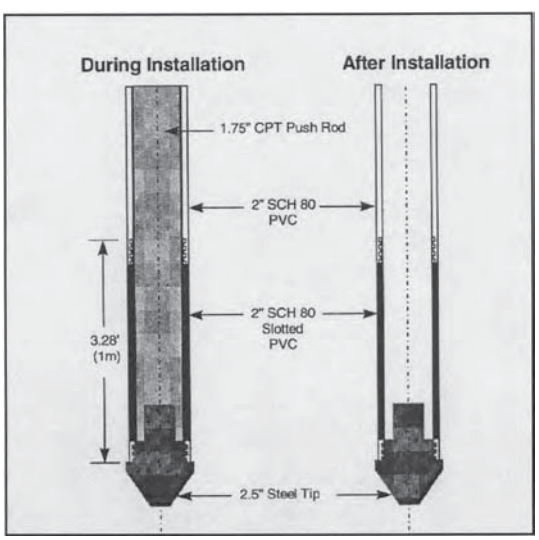


**FIG. 5 Mandrel Pushed Screen and Riser**

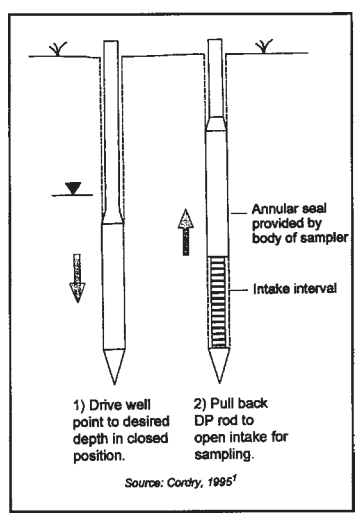


**FIG. 6 Typical Rod Driven Water Sampler (23)**

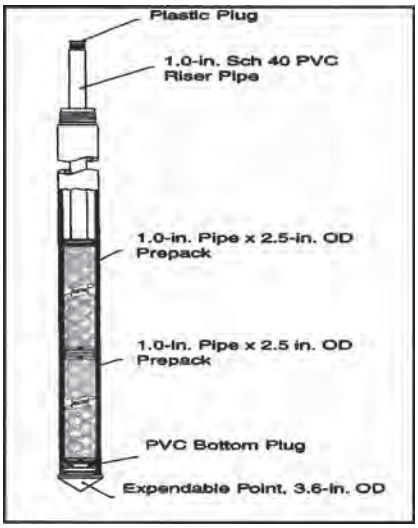


**FIG. 7 Example of Prepac ed Screens Installed After the Drive Casing is in Position (20)**

be lowered down into the casing following driving and prior to casing withdrawal, or the bottom end may be attached to an expendable push point, which remains in the ground upon retraction of the drive rods and acts as an anchor. The casing provides a positive temporary seal and allows for control of sand pack and permanent seal placement as it is retracted. Two-tube systems also allow for soil or ground water sampling along the way. However, they must be checked for standing water in the outer tube which, if not drained, may impact sample quality. Typical well diameters are from one-half to two inches.

8.4.3 *Filter Packs and Seals*—In a surficial aquifer it may be appropriate to allow the formation to collapse back in against the screen and riser without adding a sand pack. In this case the surface completion method must provide adequate protection against infiltration by surface runoff. Otherwise, sand pack and seals, if not provided by pre-packed or modular construction (7.3.2 and 7.5, respectively), can be placed by tremic or pouring methods, or by pumping.

## 9. nstallation Procedure

9.1 *Decontamination of Materials*—Well components and installation equipment may require decontamination before and/or after well installation. Consult Practice D 5088 for decontamination procedures. If the well is to be used for water chemistry testing, at least one rinseate sample of the well material will be required following decontamination and prior to installation.

9.2 *Installation*—Drive the direct push monitoring well in accordance with the standard operating procedures developed for the push system and/or monitoring well (8.1). Record all assembly lengths and rod or casing lengths, and any unusual driving conditions as the push progresses on the well completion log (Fig. 8). Record water levels if required (see Test Method D 4750). For cased systems in sand below the water table, it may be necessary to fill the casing with clean water to prevent sand heaving. With cased systems, it may be necessary to check for ground water infiltration using a water level meter

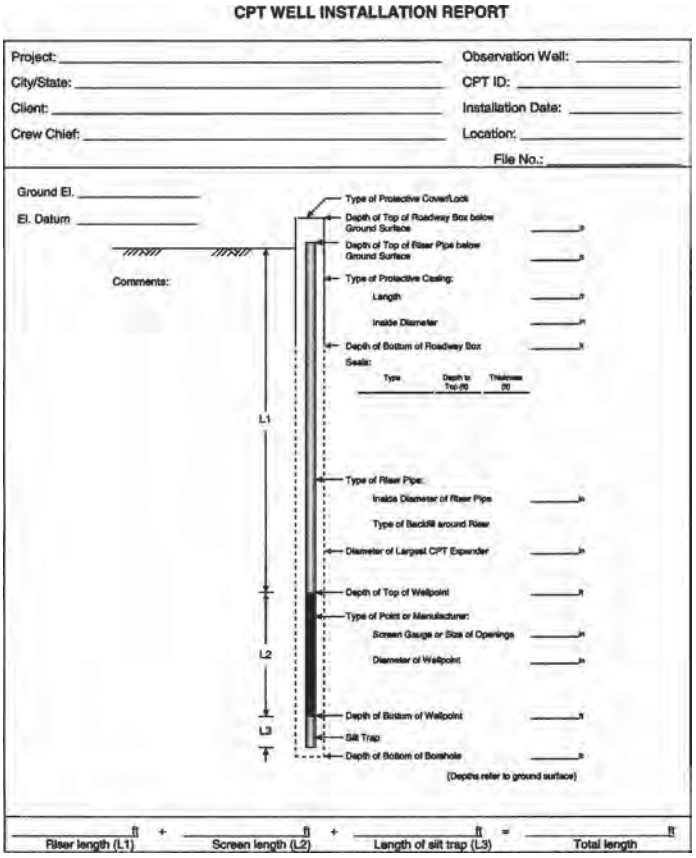


**FIG. 8 Example of a Direct Push Well Completion Report**

prior to detaching the expendable tip. This check is imperative in conditions of contaminated perched water.

9.3 *Centralizers*—For small diameter casings (less than half the size of the borehole created), the use of centralizers prevents deflections of the riser during backfilling of the annular space. Riser deflection can later interfere with the free passage of bailers and other equipment through the casing. Centralizers may also assist in sealing procedures by keeping the riser in a consistent position within the borehole.

9.4 *Sealing*—Procedures for sealing direct push monitoring wells are similar to those in Practice D 5092. Direct push sealing considerations and procedures are also addressed in sampling Guides D 6001 and D 6282. Groundwater that has entered the cased system may cause difficulty in placing seal materials by the gravity-pouring method. New grouting equipment allows for efficient and effective installation of well seals and grout (20 to 30 solids bentonite) by bottom-up tremie methods with tremie tubes as small as 0.25-in. inside diameter. Depth to the top of seal materials can be periodically checked using rods or weighted tape lowered into the annular space.

9.5 *Surface Completion*—Well capping details vary from simple to detailed, similar to rotary drilled monitoring wells. After the final height of the riser is established, record the elevation of the top of the riser pipe.

9.6 *Well Development*—Direct-push monitoring wells can be developed using mechanical surging, pumping and backwashing, hydraulic jetting, or inertial lift pumps. The first three methods are described in detail in Guide D 5521. Inertial-lift

pumps (also referred to as tubing check valve pumps) are operated by oscillating a piece of rigid or semi-rigid tubing, with a simple ball check valve on the down-hole end, in the water column within the well screen. The tubing and check valve act like a surge block, alternately forcing water to flow into the well (on the upstroke) and out of the well (on the downstroke), and significantly agitating the water column in the well and the water contained within the filter pack and the adjacent formation materials. The downstroke causes a back-washing action to loosen bridges in the formation and filter pack, and fills the tubing with water and suspended sediment brought into the well during the upstroke. The upstroke pulls dislodged fine-grained material into the well and causes water in the tubing to move upward under inertia, as the tubing is pushed back into the well. This oscillation of the tubing is repeated until water and suspended sediment are discharged from the tubing at the surface; development is complete when the water being discharged is free of suspended sediment. Additional purging with a pumping method that does not surge the well (peristaltic, bladder, etc.) may be needed to achieve low turbidity levels required for some analytes. Information on different monitoring well development and purging devices is available in Guide D 6634. Details on development methods may be found in Practice D 5092, Guide D 5521, EPA 1986, 1991, and Nielsen 1991.

9.6.1 In predominantly fine-grained formation materials (with a high silt and clay content), attempts to develop direct-push wells may not improve well yield and may result in increases in suspended sediment, clogging of the well screen and filter pack, or damage to the screen or filter pack. Pumping the well at a low flow rate, to the point at which pump discharge is free of suspended sediment (using a peristaltic pump, bladder pump, or gas-displacement pump), is often an effective development method for wells installed in fine-grained formations.

9.6.2 Well development should be done either after the well casing, screen and filter pack have been installed and the drive casing has been pulled back to just above the top of the screen (i.e., prior to installation of annular seal materials), or after the entire well has been completed. In the latter case, it is necessary to wait until the annular seal materials have set or cured, typically 48 to 72 hours after well installation

9.7 *Purging and Sampling*—Purging a direct-push monitoring well is generally required prior to sampling the well. The types of devices appropriate for use in purging and sampling a direct-push monitoring well, and the procedures for using them, are described in detail in Guide D 6634. Because of the smaller inside diameter of most direct-push well, the selection of devices is more limited than it is for wells 2 in. nominal diameter and larger. Bladder pumps, gas-displacement pumps, peristaltic pumps, bailers, and inertial-lift (tubing check valve) pumps may all be used for both purging and sampling. Guide D 6634 should be consulted to determine the conditions and analytes for which each device is appropriate. Additional information on sampling and equipment methods and procedures can be found in Guide D 4448, EPA 1986, 1991, 1992, 1996, and Nielsen 1991. Information on decontamination of sampling equipment is provided in Practice D 5088 and Parker and Ranney 2000. In wells in which low-flow purging and sampling methods (Practice D 6771) are to be used, or from which low-turbidity samples are required, bailers and inertial-lift pumps are not appropriate devices. Bladder pumps are now available in sizes as small as 1/2 in. diameter and are well suited for low flow sampling. Low flow purging and sampling (Practice D 6771) is highly recommended when sampling for metals in groundwater or other parameters that are affected by elevated turbidity, as well as sampling VOC's.

9.8 *Maintenance*—Monitoring wells that will be used for sufficiently long that biofouling or silt accumulation will be a concern may require periodic maintenance. Maintenance practices might include disinfection, acid treatment, and redevelopment and purging. However, using acid on stainless steel systems is not recommended because of problems with corrosion, and both disinfection and acid treatment are discouraged for environmental water quality monitoring wells as these practices may significantly alter the local chemistry.

9.9 *Abandonment/Decommissioning*—Direct push sampling wells may require removal or closure either at the end of their service life or if an installation attempt is unsuccessful (for example, equipment breakage or failure to reach target depth). The closure and plugging of such wells should be done in accordance with Practice D 5299. relative to techniques for direct push wells. It may be sufficient to fill the screen and riser with an impermeable grout, or if plugging the well is not acceptable, the casing may be removed by rotary over-drilling using a hollow stem auger.

## 10. Field Report and Pro ect Control

10.1 Record and report information as required in the sampling plan and as noted in Section 8 on the well installation. An example of a well completion report form is shown on Fig. 8.

10.2 Report any subsurface investigation data that are required in the sampling plan and consult Guide D 5434 on logging of subsurface investigations.

10.3 If the well data are to be used in a Geographic Information System, consult Guide D 5254 on minimum data elements for documenting a ground water sampling site.

10.4 Well development events may require a separate report of monitored ground water conditions during development.

10.5 A field notebook should be kept to document all activities relevant to the work plan. Activities include sampling events and conditions that occur during installation, development, and sampling as part of a quality assurance program.

10.6 If samples are obtained during the installation, as with two-tube soil sampling Guide D 6282, record and report the sample intervals and the data that are required.

10.7 If water samples are acquired during the push (Guide D 6001), record the purge watcr volumes and any monitored water quality indicators.

10.8 Record and report the depth of the push, and details such as effective screen length, effective seal lengths, backfilling and sealing methods. As the well is completed, ensure that all necessary installation information is recorded.

## 11. Keywords

11.1 direct push; ground water; monitoring well; site investigation

## REFERENCES


(1) Foster, M., Stefanov, J., Bauder, T., Shinn, J., and Wilson, R., (1995), *Ground Water Monitoring Review*, National Ground Water Association, Dublin, OH.

(2) Thornton, D., Ita, S., and Larsen, K., 1997, Broader Use of Innovative Ground Water Access Technologies. In Superfund VIII Conference Proceedings, Vol 2. p. 639 - 646. E.J. Krause and Assoc. Washington, D.C.

(3) McCall, W., Stover, S., Enos, C., and Fuhrmann, G., 1997, Field Comparison of Direct Push Prepacked Screen Monitoring Wells to Paired HSA 2″ PVC Wells. In Superfund VIII Conference Proceedings, Vol 2. p. 647 - 655. E.J. Krause and Assoc. Washington, D.C.

(4) McCall, W., 1999, "Field Comparison of Paired direct push and HSA Monitoring Wells," Natural Attenuation of Chlorinated Solvents, Petroleum Hydrocarbons, and Other Organic Compounds,″ April 19-22, 1999, Alleman and Leeson, eds., Battelle Press, Columbus, OH and Richland WA.

(5) Kram, Mark, D. Lorenzana, J. Michaelsen, E. Lory, 2001. Performance Comparison: DirectPush Wells Versus Drilled Wells, Naval Facilities Engineering Service Center Technical Report, TR-2120-ENV, January 2001, 55 pp.

(6) Parker, L.V. 1992. Suggested Guidelines for the Use ofPTFE, PVC and Stainless Steel in Samplers and Well Casings. In Current Practices in Ground Water and Vadose Zone Investigations, ASTM STP 1118, David M. Nielsen and Martin N. Sara, editors, American Society for Testing and Materials, Philadelphia, pp. 217-229.

(7) Parker, L.V. and T.A. Ranney. 1994. Softening of Rigid PVC by Aqueous Solutions of Organic Solvents. CRREL Special Report 94-27.

(8) Parker, L.V. and T.A. Ranney. 1995. Additional Studies on the Softening of Rigid PVC by Aqueous Solutions of Organic Solvents. CRREL Special Report 95-8.

(9) Parker, L.V. and T.A. Ranney. 1996. Further Studies on the Softening of Rigid PVC by Aqueous Solutions of Organic Solvents, CRREL Special Report 96-26.

(10) Ranney, T.A. and L.V. Parker. 1997. Comparison of Fiberglass and Other Polymeric Well Casings: Part I. Susceptibility to Degradation by Chemicals. Ground Water Monitoring and Remediation, vol. 16, no.2: 97-103.

(11) Aller, L., T.W. Bennett, G. Hackett, R.J. Petty, J.H. Lehr, H. Sedoris, D.M. Nielsen, and J.E. Denne. 1989. Handbook of Suggested Practices for the Design and Installation of Groundwater Monitoring Wells, National Water Well Association, Dublin, OH.

(12) D. Driscoll, Fletcher G. 1986. *Groundwater and Wells*, Second Edition. Johnson Screens, St. Paul, MN.

(13) Barcelona, M.J., J.P. Gibb, R.A. Miller. 1984. A Guide to the Selection of Materials for Monitoring Well Construction and Ground-Water Sampling. US Environmental Protection Agency Report Number EPA-600/2-84-024, Robert S. Kerr Environmental Research Laboratory, US EPA, Ada, OK.

(14) Parker, L.V., A.D.Hewitt, and T.F. Jenkins. 1990. "Influence of Casing Materials on TraceLevel Chemicals in Well Water," *Ground Water Monitoring and Remediation* 10(2):146-156.

(15) Hewitt, A.D. 1992, "Potential of Common Well Casing Materials to Influence Aqueous Metal Concentrations," *Ground Water Monitoring and Remediation* 12(2):131-136.

(16) Hewitt, A.D. 1994 "Dynamic Study of Common Well Screen Materials," *Ground Water Monitoring and Remediation* 14(1):87-94.

(17) Oakley, D. and N.E. Korte. 1996. Nickel and Chromium in Ground Water Samples as Influenced by Well Construction and Sampling Methods, *Ground Water Monitoring and Remediation* 16(1): 93-99.

(18) EPA 1986, Technical Enforcement Guidance Document (TEGD). OSWER Directive 9950.1, PB87-107751. September.

(19) EPA 1992, RCRA Ground-Water Monitoring: Draft Technical Guidance. Office of Solid Waste. EPA/530-R-93-001, PB93-139 350. November.

(20) Geoprobe Systems, (1999), "Geoprobe Prepack Screen Monitoring Well–Standard Operating Procedure," Technical Bulletins 99-2000 and - 2500, Geoprobe Systems, Salina, Kansas.

(21) Keller, C., (1999), "Brief Summary of the FLUTe Water Sampling Systems and Installation Procedures," Flexible Liner Underground Technologies LTD, 6 Easy St., Santa Fe, NM.

(22) Applied Research Associates, (1998), "Work Plan for direct push Monitoring Point Assessment," Contract No. F08037-98-C6002 task 32.03S, Air Force Research Laboratory, Air Base and Environmental Technology Division, Tyndall Air Force Base, August 31

(23) Cordry, K.E., 1995. "The Powerpunch," In *Proceedings of the th National Outdoor Action Conference*, National Ground Water Association, Columbus, OH.

(24) Puls, Robert W., and Michael J. Barcelona, 1996. EPA Ground Water Issue: Low-Flow (Minimal Drawdown) Ground-Water Sampling Procedures. EPA/540/S-95/504. April.



*ASTM International takes no position respecting the validity of any patent rights asserted in connection with any item mentioned in this standard. Users of this standard are expressly advised that determination of the validity of any such patent rights, and the risk of infringement of such rights, are entirely their own responsibility.*

*This standard is subject to revision at any time by the responsible technical committee and must be reviewed every five years and if not revised, either reapproved or withdrawn. Your comments are invited either for revision of this standard or for additional standards and should be addressed to ASTM International Headquarters. Your comments will receive careful consideration at a meeting of the responsible technical committee, which you may attend. If you feel that your comments have not received a fair hearing you should make your views known to the ASTM Committee on Standards, at the address shown below.*

*This standard is copyrighted by ASTM International, 100 Barr Harbor Drive, PO Box C700, West Conshohocken, PA 19428-2959, United States. Individual reprints (single or multiple copies) of this standard may be obtained by contacting ASTM at the above address or at 610-832-9585 (phone), 610-832-9555 (fax), or service@astm.org (e-mail); or through the ASTM website (www.astm.org).*

*SOP L-13:*

WELL DEVELOPMENT

# WELL DEVELOPMENT

## PURPOSE

The purpose of this Standard Operating Procedure (SOP) *Well Development* is to describe the procedures used in developing wells at the Troy Mills Landfill Superfund Site in Troy, New Hampshire.

To enhance the hydraulic connection between the wellscreen and the overburden soil or bedrock by removing fine grained materials (fines) from the vicinity of the well screen, including the filter pack. This allows groundwater to freely flow from the formation into the monitoring well, and reduces turbidity of the water during sampling.

Note: Field staff needs to check with the principal-in-charge (PIC) and/or the project manager (PM) before conducting field work to confirm the actual field procedure to be followed and to discuss and document any deviations to GZA's standard operating procedure (SOP). There are also certain contaminant conditions such as LNAPL or DNAPL where the PIC/PM may elect not to develop the monitoring well.

## EQUIPMENT AND MATERIALS

- Personal protective clothing and gear (e.g., gloves, safety glasses, tyvek suit);
- Field book;
- Calculator;
- Boring log with well construction details, including drilling method;
- Centrifugal pump and tubing;
- Container (as appropriate, 5-gallon bucket, 55-gallon drum or truck mounted tank/roll-off);
- Surge block and stem;
- Bailer, rope and ring; and
- Decontamination equipment and supplies.

## PROCEDURES

Well development needs to be completed after well installation as soon as practically possible. It should not occur any sooner than 48 hours for wells that have been grouted. It may be performed by overpumping through the use of pumps, in conjunction with a surge block, or by bailing. Factors that influence well development include: 1) the geologic material; 2) the design and completion of the well; and 3) the drilling method.

Copyright© 2010 GZA GeoEnvironmental, Inc.

Prior to well development, regardless of the method used, determine the depth to the bottom of the well by using a weighted tape or water level meter. Compare the measured well depth to the depth of the well upon installation to assess if any fine material has accumulated in the bottom of the well. Also collect the depth to water measurement. This information, combined with the depth to the bottom of the well and the diameter of the well, will be used to approximate the minimum volume of water to be purged from the well (see below for purge volume estimates for common size wells).

Ultimately well development should continue until all the fines are removed from the water column. This is not always technically feasible given the type of geologic materials are screened in. Assume well development will require the removal of a minimum of three to five times the volume of the screened water column. A greater purge volume may be required, depending on the method of drilling. Record the volume of water purged during development in your field book. Containment of purge water may be required. In many instances it may be appropriate to discharge development water directly to the ground surface. Refer to the project manager for guidance. Decontaminate equipment as appropriate prior to development of additional wells.

Overpumping

1. For well locations where static water levels are shallow (less than 20 feet [20 ] deep), recharge is sufficiently rapid to prevent drawdown below 20 feet (20'), and groundwater is not significantly contaminated, "overpumping" is an advantageous well development method. For most well locations, centrifugal pumping is the best method; where centrifugal pumping is not feasible (e.g., low recharge), alternate purging methods may be used, such as inertial, gas-driven, or bladder pumps. The following procedure is followed:

   a. & Lower clean pump tubing to the bottom of the well. Evacuate the well by pumping at a rate faster than the well would normally be pumped or purged for sample collection. Pump until discharge water, collected in a container, is visually clear of significant suspended sediment, or until the content of suspended sediment appears to stabilize after significant pumping. Tubing should be periodically raised and lowered within the well during pumping.

2. & Overpumping should be combined intermittently with mechanical surging through the use of a bailer and/or surge block. The purpose of surging is to free collected sediment from the filter pack and wellscreen. The following procedure is followed:

   a. & Slowly lower the surge block or bailer to the bottom of the well, increasing the speed of lowering and retracting near the bottom of the wellscreen. Care should be taken not to compact accumulated sediment or force it out through the wellscreen. Care should also be taken to prevent the surge block from freely falling to the bottom of the well, possibly forcing off or breaking the end cap (well point).

Copyright© 2010 GZA GeoEnvironmental, Inc. & 

b. Continue to intermittently surge and overpump the well, until a minimum of three to five well volumes have been removed from the well and the purge water is clear. An additional volume may need to be removed depending on the drilling method used. If water is lost to the formation during drilling that volume of will need to be recovered during well development.

Bailing

1. Secure bailer rope to a clean bailer. Tie a bailer ring to the end of the rope to keep the rope from being pulled back into the well. Allow the bailer to free fall down the well until it strikes the surface of the water. The contact of the bailer produces a surge of water forced out the borehole in the formation. Remove the bailer from the well once it fills. As the bailer fills and is rapidly withdrawn from the well, particulate matter flows into the well.

2.& Continue bailing until the water is free of suspended sediments. In general, a purge volume of three to five times the well volume is the minimum volume to be removed from the well, regardless of whether the water is free of suspended sediments. It assumes no water was lost to the formation during drilling. The additional volume produced during drilling will also need to be removed during development.

3.& If the well is dewatered during bailing, resume bailing once the well has recovered.

4.& During bailing, care should be taken to keep the bailer rope off the ground. If it makes contact with the ground surface, any contaminants on the ground may be introduced to the well.

Well Volume Calculations

The purge volume is equal to $h \times 3.14(r/12)^2 \times 7.48$ gal/ft$^3$

One purge volume is equal to (h) * (f)
& where:
h = height of the water column (depth to bottom – depth to water) in feet; and
& f = the volume in gal/foot from the above table.

The volume (one purge volume) in gallons/feet for common size monitoring wells are as follows:

| Well Diameter (inches) | 1 | 1.5 | 2 | 3 | 4 | 6 |
|---|---|---|---|---|---|---|
| Volume (gal/feet) | 0.041 | 0.032 | 0.1631 | 0.3670 | 0.6524 | 1.4680 |

Copyright© 2010 GZA GeoEnvironmental, Inc. &

## RECORDS AND DOCUMENTATION

All well development information including the purge calculation and resulting volume purged, visible water quality (appearance) and changes of visible water quality, and any odors or other information should be recorded in the field notebook.

## SPECIAL NOTES

None.

## APPLICABLE REFERENCES AND STANDARDS

Massachusetts Department of Environmental Protection, Standard References, "Well Development" (Section 4.5), March 1989.

United States Environmental Protection Agency – Office of Research and Development, EPA Document #160014-891034, "Handbook of Suggested Practices for the Design and Installation of Ground-Water Monitoring Wells" (Section 7), March 1991.

United States Environmental Protection Agency – Environmental Response Team Standard Operating Procedures "Well Development" SOP #2044 Revision 0.1, October 23, 2001.

m:\files\nhdes master qapp - june 2009\appendix d - sops\sop d-12 well development.doc

Copyright© 2010 GZA GeoEnvironmental, Inc.

*SOP L-14:*

SAMPLING EQUIPMENT DECONTAMINATION PROCEDURE

# SAMPLING EQUIPMENT DECONTAMINATION PROCEDURE

## PURPOSE

This Standard Operating Procedure (SOP) *Sampling Equipment Decontamination Procedure* is designed to provide a procedure for preventing, minimizing, or limiting cross-contamination of environmental samples at the Troy Mills Landfill Superfund Site in Troy, New Hampshire. This SOP focuses on small equipment decontamination (e.g., split spoons, hand augers, water level meters, oil water interface probes, sediment dredge tools, etc.) which combines both physical and chemical removal steps. Removing or neutralizing contaminants from equipment not only minimizes the likelihood of sample cross contamination, but reduces or eliminates transfer of contaminants to clean areas and prevents the mixing of incompatible substances.

Gross contamination can be removed by physical decontamination procedures. These abrasive and non-abrasive methods used by GZA typically include the use of brushes and high and low pressure water cleaning. The first step, a soap and water wash, removes all visible particulate matter and residual oils and grease. The second step involves a distilled/deionized water rinse to remove the detergent. Next, a pesticide-grade hexanes rinse/wipe is performed for trace semi-volatile organics removal followed a pesticide-grade isopropanol rinse to remove trace volatile organics. Isopropanol must evaporate completely prior to a final distilled/deionized water rinse.

Note: Field staff need to check with the principal-in-charge (PIC) and/or the project manager (PM) before conducting field work to confirm the actual field procedure to be followed and to discuss and document any deviations to GZA's standard operating procedure (SOP).

## EQUIPMENT AND MATERIALS

The following is a list of equipment and material commonly used for decontamination:

- Non-phosphate detergent (alconox);
- Selected solvent rinses (pesticide-grade isopropanol and pesticide-grade hexane);
- Distilled or deionized water;
- Long and short handled brushes and bottle brushes (that can fit within the bailer);
- Drop cloth/plastic sheeting;
- Paper towels;
- Plastic / stainless steel tubs or buckets;
- Pressurized sprayers;
- Spray bottles;
- Aluminum foil;

- Ziploc® plastic bags; and
- Appropriate personal protective equipment (i.e., safety glasses appropriate gloves, boots).

**DECONTAMINATION PROCEDURES**

The decontamination line is setup so that the first station is used to clean the most contaminated item. It progresses to the last station where the least contaminated item is cleaned. The spread of contaminants is further reduced by separating each decontamination station by a minimum of 3 feet. Ideally, the contamination should decrease as the equipment progresses from one station to another farther along in the line.

The decontamination procedure is summarized as follows:

1. Physical removal - non-phosphate detergent wash;
2. Distilled/deionized water rinse;
3. Solvent rinse bath (pesticide-grade hexanes);
4. Solvent rinse wipe (pesticide-grade hexanes);
5. Solvent rinse (pesticide-grade isopropanol);
6. Air dry;
7. Distilled/deionized water rinse; and
8. Secure clean equipment.

Note: The decontamination procedure for water level meters and oil/interface probes shall include special handling of the portion of the water level meter and oil interface probe that has been utilized in level measurement. Rather than rolling the dirty tape back on to the reel, the tape shall be removed from the well by hand and placed in a clean 5-gallon plastic bucket for transportation to the decontamination station. The tape and the bucket will be decontaminated as outlined in the decontamination procedure.

<u>Physical Removal</u>
Fill a wash basin or a large bucket with non-phosphate detergent and tap water. Scrub equipment with soap and water using bottle and/or bristle brushes. For such equipment as bailers, ensure that the interior space is scrubbed with bottle brushes. Wash soap off of equipment with distilled/deionized water from a low-pressure sprayer. Repeat as many times as necessary.

Sensitive equipment which is not waterproof should be wiped down with a damp cloth.

Solvent Bath/Wipe – Hexanes
Rinse sampling equipment by thoroughly submerging contaminated equipment in hexanes contained in a stainless steel tub or bucket or other appropriate container (solvent bath). Next, carefully wipe the equipment down (inside/outside, as appropriate) with a paper towel saturated with hexane (solvent wipe). Allow hexanes to evaporate.

Solvent Sprayer - Isopropanol
Rinse sampling equipment with pesticide-grade isopropanol contained in a labeled spray bottle. Begin spraying (inside and outside) at one end of the equipment allowing the solvent to drip to the other end into a 5-gallon bucket. Rinse sampling equipment with distilled/deionized water with a low-pressure sprayer.

Clean Equipment Drop
Lay clean equipment on plastic sheeting. Once air dried, wrap sampling equipment with aluminum foil, plastic, or other protective material.

IDW (Investigative Derived Waste) Disposal
Solid Waste – Place all solid waste materials generated from the decontamination area (i.e., gloves and plastic sheeting, etc.) in an approved container.

Liquid Waste – Place used soap water and isopropanol liquid wastes into labeled 5-gallon plastic containers and store with lid on. Place used hexane liquid wastes into labeled 4-liter glass containers. Return decontamination solids/fluid containers to office. Store waste in flammable storage cabinets and contact appropriate office personnel to arrange for disposal.

## RECORDS AND DOCUMENTATION

General decontamination procedures should be documented in the field log book.

## SPECIAL NOTES

All field activities must be carried out in accordance with a site-specific Health and Safety Plan. MSDSs are required to be on site when using decontamination acid and/or solvent solutions.

## APPLICABLE STANDARDS AND REFERENCES

United States Environmental Protection Agency – Environmental Response Team Standard Operating Procedures "Sampling Equipment Decontamination" SOP #2006 Revision 0.0, August 11, 1994.

Decontamination SOP in the current NHDES Hazardous Waste Remediation Bureau (HWRB) Master Quality Assurance Project Plan (HWRB Master QAPP), EPA RFA#08036

*SOP L-15:*

# CHAIN-OF-CUSTODY, SAMPLE PACKAGING AND SHIPMENT PROCEDURES

*NHDPHS Example Laboratory Chain-of-Custody*

*ESS Example Laboratory Chain-of-Custody*

# CHAIN-OF-CUSTODY, SAMPLE PACKAGING AND SHIPMENT PROCEDURES

## PURPOSE

This Standard Operating Procedure (SOP) *Chain-of-Custody, Sample Packaging and Shipment Procedures* has been established to provide for sample integrity in addition to proper sample labeling and completion of Chain-of-Custody (COC) forms; and proper sample packaging and shipment for the Troy Mills Landfill Superfund Site (Troy).

A COC is a legal document designed to track persons who are responsible for the preparation of the sample container, sample collection, sample delivery, sample storage, and sample analysis. The field sampler is personally responsible for the care and custody of the samples until they are transferred or properly dispatched. As few people as possible should handle the samples. A sample including empty sample containers, samples and coolers are under a person's custody if it meets the following requirements:

- It is in the person's possession;
- It is in the person's view, after being in the person's possession;
- It was in the person's possession and it was placed in a secured location; or
- It is in a designated secure area.

******Never leave samples including un-used sample containers unattended unless they are secured in a locked vehicle or building for which no one else has access******

All samples submitted to a laboratory shall be accompanied by a properly completed COC form, be packaged and shipped as appropriate. Always check with the selected laboratory-specific requirements regarding COCs.

For the Troy project, all samples will be delivered to the New Hampshire Department of Health Human Services, Division of Public Health Services (NHDPHS) Laboratory in Concord, New Hampshire by GZA and/or NHDES courier with the exception of soil samples to be analyzed for SVOCs (base neutrals), carbonate alkalinity, specific conductance, ORP and COD. These samples will be shipped directly to ESS Laboratory in Cranston Rhode Island by GZA. Examples COCs for each laboratory are attached.

## EQUIPMENT AND MATERIALS

The following is a list of equipment and material commonly used for labeling, packaging and shipping samples:

- COC forms/seals;
- bubble wrap or air cushions;

- re-sealable plastic bags;
- permanent waterproof ink marker;
- black ink pen;
- loose ice;
- shipping coolers;
- sample labels;
- packing ; and
- tape.

**CUSTODY PROCEDURES**

1.& The field sampler will review the Sampling and Analysis Plan (SAP) provided by the project manager for specific COC record-keeping requirements. Note the following key COC related items:

- Quality Assurance/Quality Control (QA/QC) data package requirements (i.e., level A, B, or C) for project-specific data validation needs;
- Laboratory reporting options required (i.e., preliminary results requested or electronic deliverable options needed);
- Turn-around-time required (standard or rush);
- Special laboratory requirements required (i.e., lower detection limits);
- Short hold time issues; and
- Sample volume issues.

2.& The field sampler will label all sample bottles with the following: sample ID, sampler name, date and time sample was collected, laboratory analysis and test method requested, preservative used, Site name/location, and GZA project number. Sample tags should be filled out using waterproof ink for each sample.

***Note: No additional labels should be used for soil VOA samples as these are pre-weight by the laboratory. GZA field staff should use the pre-provided label already on the container.***

3.& Prior to leaving the site, the field sampler will verify that all pertinent data is on both the sample label and the COC form. Check for errors on the label and COC form.

4.& The unique laboratory COCs (example NHDPHS, and ESS COCs are attached) will be filled out and include the following: unique sample ID, the NHDES Site number, time and date of collection, matrix type (i.e., soil, groundwater, surface water), laboratory test and method requested, the preservative used, the number of containers, names and phone numbers of the project contact persons, specific requirements such as specific Reporting Detection Limits and any special notes. The COC should also include any QA/QC

samples and associated information (i.e., duplicate, trip blank, temperature blank, and equipment blanks).

Either one of the field samplers or the onsite QA Officer will prepare the COCs. The names and phone numbers of all the field samplers and the QA Officer must be listed on the COC.

5.& When transferring the possession of samples, the individuals relinquishing and receiving will sign, date, and note the time on the record. This record documents transfer of custody of samples from the sampler to another person, to a mobile laboratory, to the permanent laboratory, or to/from a secure storage area.

Only one of the field samplers signs the first "relinquished by" line. The person who receives the samples at the laboratory signs the COC last in the "received by" line. In case there are additional steps in the process requiring another person or persons to take custody of the sample, the form has additional lines for signatures. All signatures must be in ballpoint pen and are followed by a date and time that the COC was signed. The line at the bottom of the page is provided for personnel from the laboratory to sign for receiving the sample. If the samples are taken to the lab via courier the sampler will relinquish the samples to "NHDPHS Laboratory via courier."

**Note: Any <u>errors must be lined out and initialed</u>, and the correction written in**.

6.& If the samples are shipped by public courier (i.e., Federal Express, UPS, etc.) the airbill generally serves as the chain-of-custody record for that portion of the trip and will be retained by the field sampler (and provided to the project manager) as part of the permanent documentation.

7.& The project manager and/or QC officer will review the COC to evaluate completeness; holding time or sample volume issues that may impact the validity of the results.

## SAMPLE PACKAGING PROCEDURES

Sample containers are generally packaged in insulated coolers for shipment or pickup by the laboratory courier. Appropriate packing materials include bubble wrap and air cushions. Sample containers are packed tightly so minimize movement during shipment that may cause breakage.

1.& To eliminate the chance of breakage during shipment, approximately 1 inch of inert material shall be placed in the bottom of the cooler.

2.& Include a temperature bank and any necessary trip blanks in loose ice in each cooler prior to sample collection.

3.& Place each sample container, or sample site set of containers that have been bubble wrapped tightly inside a plastic bag and seal, as a precaution against cross-contamination due to leakage or brakeage.

4.& Place all containers in an upright position into the loose ice in the cooler and place all glass containers in such a way that they do not come into contact with each other during shipment.

5.& After samples have been packed, **loose ice** will be added to the cooler to ensure temperature preservative is achieved (temperature 4 +/-2 degrees Celsius).

6.& Include a completed COC in a sealed Ziploc® bag within each cooler being shipped to or picked up by the laboratory.

7.& Coolers being shipped (not couriered) will be secured with strapping tape in at least two locations for shipment to the laboratory and include a custody seal.

8.& Prior to any cooler being shipped that contains environmental samples, **you are required to evaluate if the samples/sample containers being shipped are considered hazardous**. Consult appropriate trained office personnel for proper packaging and labeling requirements.

## SAMPLE PICKUP/SHIPPING PROCEDURES

Samples will be properly packaged for shipment, and a separate signed COC record will be enclosed in each sample cooler if more than one is used. Shipping containers will be secured with strapping tape and a custody seal in at least two locations for shipment to the laboratory. When samples are transported via courier, strapping tape and custody seals are not required.

Samples will be transported to the NHDPHS and ESS laboratories in such a manner as to preserve their integrity and will be delivered at least every other day and if possible, no samples should be held over the weekend. Samples requiring shipment to Microseeps shall be sent next-day delivery by Federal Express or an equivalent overnight carrier. The receiving laboratory shall be given advance notice by the field sampler no later than 48 hours before sample shipment.

If Friday sampling is unavoidable and Saturday delivery is not possible, samples shall be properly stored (custody and sample preservation must be maintained) over the weekend in GZA's office sample refrigerator. The building is locked when GZA personnel are not present to prevent unauthorized access. If prompt shipping and laboratory receipt of samples cannot be guaranteed, the samplers will be responsible for proper storage of samples until adequate transportation arrangements can be made or sample collection schedules can be modified by the Project Manager. If holding times would be exceeded by storing the samples, alternative arrangements must be made by the Project Manager for sample collection and shipment or pickup.

## DOCUMENTATION

The original COC record will accompany the cooler and a copy will be retained by the sampler for return to the project manager.

## APPLICABLE STANDARDS AND REFERENCES

Chain of Custody Sample Handling Shipping Procedure included in the current Hazardous Waste Remediation Bureau Master QAPP, EPA RFA#08036.

## ATTACHMENTS

NHDPHS COC
ESS COC

p:\04jobs\0024400s\04.0024466.00\04.0024466.61 - troy spring 2011\work\task 3 -- sap revisions -- spring 2011 sap\appendix\appendix c - gza sop\sop b-11_1r coc.doc

# NH DHHS-DPHS LABORATORY SERVICES LOGIN AND CUSTODY SHEET

**(Laboratory Policy: Samples not meeting method requirements will be analyzed at the discretion of the** NH DPHS, PHL Laboratory**.)**

## Samples must be delivered in a cooler with loose ice.

**LAB ACCOUNT (Billing) #04-0000307** **One Stop (PROJECT) ID# SUPERFND** **DES Site Number 198405082** **Temp. $^0$ C. _____**

Description: Troy Mills Landfill Superfund Site Town: Troy NH

**NHDES Contact**: Robin Mongeon (603) 271- 7378, Sharon Perkins (603) 271- 6805 (Sharon's cell 419-9209)

**Comments:**

**GZA Contact:** Michael Asselin (603) 232-8739

**Collected By & Phone#**: Stefanie Lamb (603)-765-9720, Amy Doherty (603) 361-4222; Heidi Rizza (603) 361-0177; Robin Mongeon (603) 271- 7378

| Sample Location /ID | Date/Time Sampled | # of Containers | Matrix | 8260B | SVOCs (base neutrals) | Total Fe, Cr, Mn, Se | TPH / DRO | Comments | Lab ID # ( For Lab Use Only ) |
|---|---|---|---|---|---|---|---|---|---|
| | | | | | | | | | |
| | | | | | | | | | |
| | | | | | | | | | |
| | | | | | | | | | |
| | | | | | | | | | |
| | | | | | | | | | |
| | | | | | | | | | |
| | | | | | | | | | |
| | | | | | | | | | |
| | | | | | | | | | |

**Preservation:** Aqueous VOCs: HCL/4°C +/-2°C; Solid VOCs: Methanol/4°C +/-2°C; Aqueous SVOCs (base neutrals):4°C +/-2°C; Aqueous Metals: HNO3; Solid Metals & TPH/DRO 4°C +/-2°C

☐ Temperature Blank Included in Cooler

Relinquished By_____Date and Time_____Received By_____ Matrix: A= Air; S= Soil; SED = Sediments; AQ= Aqueous; O = Other

Relinquished By_____Date and Time_____Received By_____

Relinquished By_____Date and Time_____ **Received For Laboratory By_____**

**Page _____ of _____** Data Reviewed By_____ Date_____

Section No.: 22.0
Revision No.: 5 (HWRB)
Date: 11-2-06
Page 1 of 1

# ESS Laboratory

*Division of Thielsch Engineering, Inc.*
185 Frances Avenue, Cranston, RI 02910-2211
Tel. (401) 461-7181 Fax (401) 461-4486
www.esslaboratory.com

# CHAIN OF CUSTODY

Page _____ of _____

Turn Time ___ Standard Other _____
If faster than 5 days, prior approval by laboratory is required # _____

State where samples were collected from:
MA RI CT NH NJ NY ME Other _____

Is this project for any of the following:
**MA-MCP*** **Navy** **USACE** Other _____

Reporting Limits

ESS LAB PROJECT ID

Electronic Deliverable
___ Yes ___ No Format _____

| Co. Name | Project # | Project Name (20 Char. or less) |
|---|---|---|
| Contact Person | Address | |
| City State Zip | PO# | |
| Telephone # | Fax # | Email Address |

Circle and/or Write Required Analysis

| ESS LAB Sample# | Date | Collection Time | COMP | GRAB | MATRIX | Sample Identification (20 Char. or less) | Number of Containers | Type of Containers | 8260 | 624 | 524.2 | 8021 MTBE/BTEX | 8015 GRO | VPH | 8100 TPH | 8015 DRO | EPH | No Targets | 8081 Pesticides | 8082 PCB | 608 Pesticides | 608 PCB | 8270 | 625 | PAH only | RCRA5 | RCRA8 | PP13 | TAL23 | TCLP8 | MCP | MCPw/Hg | NBC7 | | | | | | | | |
|---|---|---|---|---|---|---|---|---|---|---|---|---|---|---|---|---|---|---|---|---|---|---|---|---|---|---|---|---|---|---|---|---|---|---|---|---|---|---|---|---|
| | | | | | | | | | | | | | | | | | | | | | | | | | | | | | | | | | | | | | | | | |
| | | | | | | | | | | | | | | | | | | | | | | | | | | | | | | | | | | | | | | | | |
| | | | | | | | | | | | | | | | | | | | | | | | | | | | | | | | | | | | | | | | | |
| | | | | | | | | | | | | | | | | | | | | | | | | | | | | | | | | | | | | | | | | |
| | | | | | | | | | | | | | | | | | | | | | | | | | | | | | | | | | | | | | | | | |
| | | | | | | | | | | | | | | | | | | | | | | | | | | | | | | | | | | | | | | | | |
| | | | | | | | | | | | | | | | | | | | | | | | | | | | | | | | | | | | | | | | | |
| | | | | | | | | | | | | | | | | | | | | | | | | | | | | | | | | | | | | | | | | |
| | | | | | | | | | | | | | | | | | | | | | | | | | | | | | | | | | | | | | | | | |
| | | | | | | | | | | | | | | | | | | | | | | | | | | | | | | | | | | | | | | | | |

Container Type: P-Poly G-Glass S-Sterile V-VOA

Matrix: S-Soil SD-Solid D-Sludge WW-Waste Water GW-Ground Water SW-Surface Water DW-Drinking Water O-Oil W-Wipes F-Filters

Cooler Present ___ Yes ___ No
Seals Intact ___ Yes ___ No NA: _____
Cooler Temp: _____

Internal Use Only
[ ] Pickup
[ ] Technicians _____

Comments:

| Relinquished by: (Signature) | Date/Time | Received by: (Signature) | Date/Time | Relinquished by: (Signature) | Date/Time | Received by: (Signature) | Date/Time |
|---|---|---|---|---|---|---|---|
| | | | | | | | |
| Relinquished by: (Signature) | Date/Time | Received by: (Signature) | Date/Time | Relinquished by: (Signature) | Date/Time | Received by: (Signature) | Date/Time |
| | | | | | | | |

*MADEP requires that all additional calibrated analytes found during analysis be disclosed.

Please fax all changes to Chain of Custody in writing.

1 (White) Lab Copy 2 (Yellow) Client Receipt