DAPL EXTRACTION PILOT STUDY PERFORMANCE EVALUATION REPORT

OLIN CHEMICAL SUPERFUND SITE
51 EAMES STREET
WILMINGTON, MASSACHUSETTS

Submitted to:

United States Environmental Protection Agency
Region I – New England
5 Post Office Square, Suite 100; Mail Code 05RR07-4
Boston, Massachusetts 02109-3912

Submitted by:

Olin Corporation
3855 North Ocoee Street; Suite 200
Cleveland, Tennessee 37312

Prepared by:

AMEC Environment & Infrastructure, Inc.
511 Congress Street, Suite 200
Portland, Maine 04101

November 7, 2014

SDMS Doc ID 576492

DAPL EXTRACTION PILOT STUDY PERFORMANCE EVALUATION REPORT

OLIN CHEMICAL SUPERFUND SITE
51 EAMES STREET
WILMINGTON, MASSACHUSETTS

Submitted to:

United States Environmental Protection Agency
Region I – New England
5 Post Office Square, Suite 100; Mail Code 05RR07-4
Boston, Massachusetts 02109-3912

Submitted by:

Olin Corporation
3855 North Ocoee Street; Suite 200
Cleveland, Tennessee 37312

Prepared by:

AMEC Environment & Infrastructure, Inc.
511 Congress Street, Suite 200
Portland, Maine 04101

November 7, 2014

Peter Thompson
Project Manager

Rod Pendleton
Project Principal

TABLE OF CONTENTS

LIST OF FIGURES iv
LIST OF TABLES iv
LIST OF APPENDICES iv
LIST OF ACRONYMS AND ABBREVIATIONS v
1.0 INTRODUCTION 1-1
1.1 DAPL Extraction Pilot Test Objectives and Scope 1-1
1.2 Scope and Purpose of Performance Evaluation Report 1-3
1.3 Project Timeline 1-4
1.3.1 Planning Phase 1-4
1.3.2 Design Phase 1-5
1.3.3 Construction Phase 1-5
1.3.4 Extraction Phase 1-5
2.0 Methods and Materials 2-1
2.1 System Design and Functions 2-1
2.1.1 DAPL Extraction, Storage and Shipping 2-1
2.1.2 Monitoring Well Network 2-2
2.1.3 Induction Logging Wells 2-3
2.1.4 Multilevel Piezometer Construction 2-3
2.2 Systems Operation and Monitoring 2-4
2.2.1 Pumping Steps 2-4
2.2.2 Non-Operating Time 2-5
2.2.3 Monitoring Schedule and Approach 2-5
3.0 Results 3-1
3.1 Water Quality Monitoring 3-1
3.2 Induction Logging 3-3
3.3 Water Levels 3-4
3.4 DAPL/Diffuse Interface Changes Due to Pumping 3-4
3.5 Rebound Monitoring 3-4
4.0 Conclusions and Recommendations 4-1
4.1 Total DAPL Removed 4-1
4.2 DAPL Removal Efficiency 4-1
4.3 Effect of Pumping Rate on Interface Stability 4-2
4.4 Recommendations 4-2
5.0 REFERENCES 5-1

LIST OF FIGURES

Figure 1-1 Results of the Direct-Push Investigation

Figure 2-1 Location of Extraction Well and Monitoring Well Network
Figure 2-2 Extraction and Monitoring Well Configuration

Figure 3-1 Interpreted Vertical Hydraulic Gradients Pumping Step 1
Figure 3-2 Interpreted Vertical Hydraulic Gradients Pumping Step 2
Figure 3-3 Interpreted Vertical Hydraulic Gradients Pumping Step 2
Figure 4-1 Interpreted Extent of Off-PWD DAPL Pool

LIST OF TABLES

Table 2-1 Non-Operating Periods
Table 2-2 Schedule for Baseline Water Quality Sampling
Table 2-3 Schedule for Pumping Step 1 Water Quality Sampling
Table 2-4 Schedule for Induction Logging
Table 2-5 Schedule for Water Level Gauging
Table 2-6 Schedule for Pumping Step 2 Water Quality Monitoring
Table 2-7 Schedule for Pumping Step 3 Water Quality Monitoring

Table 3-1 Water Quality Monitoring Results for Pumping Step 1
Table 3-2 Water Quality Monitoring Results for Pumping Step 2
Table 3-3 Water Quality Monitoring Results for Pumping Step 3
Table 3-4 Tabulated Water Level Data
Table 3-5 Calculated Vertical Hydraulic Gradients

Table 4-1 Revised DAPL Pool Volume Estimate
Table 4-2 Estimated Uniform DAPL Pool Elevation Change

LIST OF APPENDICES

Appendix A Design Plans
Appendix B Well Construction Diagrams
Appendix C Induction Logging SOP
Appendix D Water Quality Data Plots
Appendix E Induction Log Plots

LIST OF ACRONYMS AND ABBREVIATIONS

AMEC	AMEC Environment & Infrastructure, Inc.
DAPL	Dense Aqueous Phase Liquid
DAPL Pilot	DAPL Extraction Pilot Test
DI	deionized
gpm	gallons per minute
I/CO	inspection/cleanout manhole
MCP	Massachusetts Contingency Plan
MassDEP	Massachusetts Department of Environmental Protection
mg/L	milligrams per liter
off-PWD	off-Property West Ditch
Olin	Olin Corporation
OM&PM	Operation, Maintenance & Performance Monitoring Plan
ORP	oxidation-reduction potential
PVC	polyvinyl chloride
SOP	standard operating procedure
µmhos/cm	micro-ohms per centimeter
USEPA	United States Environmental Protection Agency
VFD	variable frequency drive

1.0 INTRODUCTION

A Dense Aqueous Phase Liquid Extraction Pilot Test (DAPL Pilot Test) was conducted from 2012 to 2014 at the Olin Chemical Superfund Site (Site) in Wilmington, Massachusetts to evaluate the feasibility of DAPL extraction in the off-Property West Ditch (off-PWD) Study Area. This DAPL Extraction Performance Evaluation Report has been prepared on behalf of Olin Corporation (Olin) by AMEC Environment & Infrastructure, Inc. (AMEC). This introduction is intended to:

- Provide a summary discussion of the bench-scale test including conclusions from the bench-scale test which helped form the basis for extraction rate expectations for the DAPL Pilot Test,
- Provide a general discussion of the scope and objectives of the Pilot Test,
- Identify scope and purpose of the Performance Evaluation Report and how the results will be assimilated within the RI/FS process, and
- Summarize the general time line from design to construction, operation (including unscheduled shutdowns) and ultimate shut down of Pilot System.

Section 2 of the report discusses Pilot Test methods and materials as well as any deviations from the final Operation, Maintenance, and Monitoring (OM&M) Plan (AMEC, 2012); Section 3 presents results of water quality and water level monitoring; and Section 4 offers conclusions and recommendations for use of the data in follow-on studies, such as the Groundwater Operable Unit 3 Feasibility Study.

A detailed description of the definition of DAPL is presented in Section 3.0. For the Pilot Test, the working field definition for DAPL is the dense fluid with specific conductivity greater than 20,600 micro-mhos per centimeter (µmhos/cm) and Diffuse Layer material being that overlying layer with specific conductivity between 20,600 and 3,000 µmhos/cm. Overlying groundwater is defined as having specific conductivity less than 3,000 µmhos/cm.

1.1 DAPL Extraction Pilot Test Objectives and Scope

The overall objective of the DAPL Pilot Test was to:

- Assess the feasibility of recovering DAPL from the subsurface in a manner that minimizes disturbance of the DAPL pool surface and mixing with overlying Diffuse Layer material and overlying groundwater, and
- Develop information to be used in the Operable Unit (OU) 3 Feasibility Study (FS) evaluation of remedial alternatives.

One of the Pilot Test goals was to remove DAPL in a manner that minimizes intrusion of overlying groundwater and Diffuse Layer into the DAPL, thereby preventing or minimizing

hydraulic and geochemical conditions that could result in undesirable effects as discussed in the Pilot Test OM &M Plan (AMEC, 2012) and in the bullets that follow.

The underlying principal for the Pilot Test is that the movement of the DAPL is governed by density-driven flow mechanisms. The DAPL is contained within a shallow sloping bedrock depression, which forms a "bowl-shaped" sloping aquifer with a central low point, or bottom. Extraction of fluid from the low point of this depression will result in DAPL movement along this sloping boundary toward the central extraction point. For a DAPL removal strategy to be effective and efficient, the rate at which the DAPL is pumped should not exceed the density-driven flow rate towards the extraction point. Pumping at an excessive rate over an extended period of time could create several conditions that would favor inefficiency or failure of the extraction strategy. These include:

- Causing the Diffuse Layer and overlying groundwater intrusion into the DAPL material resulting potentially in mineralization (i.e., precipitation of aluminum, iron and chromium hydroxides, acid sulfates and other minerals) and aquifer clogging;
- Causing excessive drawdown of the DAPL/Diffuse Layer interface in the vicinity of the pumping wells with similar potential detrimental effects;
- Causing a disturbance of either the DAPL or the Diffuse Layer that could induce convective flow patterns and potentially cause impacts to spread over a broader area and/or increase concentrations of DAPL constituents at shallower depths in the aquifer; and
- Causing an expansion of the Diffuse Layer thickness.

The approach for the Pilot Test was to pump the DAPL from a well with a short screened interval positioned as near the bottom of the DAPL pool as feasible. The pumping rate was varied in three steps over a pre-determined range and a monitoring well network around the extraction well was monitored to evaluate changes in the DAPL/ Diffuse Layer and overlying groundwater interfaces. The pumping rates were designed to be within and above the estimated rate at which DAPL could be replenished gravimetrically to the well screen. Geomega (Geomega, 2004a) made an initial estimate of the density-driven flow rate for the upper DAPL pool in the off-PWD Study Area. This estimate, which ranges from 0.2 to 0.8 gallons per minute (gpm), is a function of the DAPL density, bedrock slope, aquifer porosity and hydraulic conductivity. This estimate was developed by modeling conducted consistent with the concepts of density driven movement of liquids in sloping aquifers (Dorgarten and Tsang, 1991). The DAPL pool is known to be density stratified with the more concentrated and denser layers at the bottom of the DAPL pool. If the pumping strategy is executed properly and successfully, the denser DAPL will be removed in the early stages of extraction, and density will decrease with time as the DAPL interface becomes lower and less dense DAPL is removed. Density therefore is a variable that is expected to change with time and as density of the fluid becomes less, the density-driven flow rate will decrease.

Based on our understanding of density-stratified material, the appropriate expectation is that the level of DAPL within the pool will be uniformly lowered when the extraction rate equals the gravity-driven replenishment rate of DAPL to the extraction well screen. This is especially true with a short extraction well screen. If the pumping rate exceeds the gravity-driven flow rate along the bottom of the pool, shallower DAPL around the extraction well will be pulled downward along a shorter flow path to the well screen resulting in localized drawdown of the DAPL/diffuse layer interface. This will also eventually result in intrusion of overlying Diffuse Layer material and overlying groundwater into the DAPL around the extraction well.

The Pilot Test scope included collecting geophysical (induction logging) and chemical data to gauge how the DAPL pool responded to each pumping rate over time. The induction logging serves to map changes in the vertical profile of in-situ fluid conductivity within the DAPL near the extraction well. The chemical data collected from closely spaced multiport piezometers allows vertical tracking of changes in the DAPL/Diffuse layer interface based on field fluid conductivity measurements. The DAPL extraction rates tested were 0.5, 1.0 and 2.0 gallons per minute (gpm) for target durations of 90, 120, and 180 days, respectively. The third pumping step at 2.0 gpm could not be sustained for the entire target duration (180 days). We have continued to monitor recovery of the DAPL /Diffuse Layer interface since the final pumping step was terminated on May 22, 2014 after discussion with USEPA. The DAPL Pilot system has not been decommissioned or removed and all equipment is being maintained.

During the execution of the Pilot Test, monitoring data was plotted and submitted to USEPA by Olin on a frequent basis. USEPA was apprised on the progress of the Pilot Test and was aware the final pumping rate of 2.0 gpm was not sustainable due to excessive drawdown of the DAPL / Diffuse Layer interface. At the time of test failure (i.e., drawdown of the DAPL/diffuse material interface into the extraction well screen) the mix of DAPL and diffuse material and/or overlying groundwater being extracted no longer possessed the characteristics of DAPL.

1.2 Scope and Purpose of Performance Evaluation Report

The scope of this report includes:

- providing a general description of the design history and design elements and function of the Pilot system
- providing data supporting the current interpretation of the physical dimensions and volume of the Off-PWD DAPL pool
- tabulating, presenting, and interpreting induction logging data, groundwater chemical data, and groundwater elevation data collected during the pilot test, and
- providing conclusions and recommendations

The purpose of this report is to provide conclusions and recommendations pertaining to:

- achievable long term DAPL extraction limits and strategies
- factors that affect efficiency of DAPL extraction, and
- use of this information in the OU3 Feasibility Study Process.

1.3 Project Timeline

The timeline for the entire DAPL Pilot Study includes activities that pre-dated the actual extraction of DAPL, and extends back more than a decade and includes Planning, Design, Construction and Extraction Phases which are summarized briefly below.

1.3.1 Planning Phase

Evaluation of DAPL extraction as a remedial strategy predated the listing of the Olin Site as a Superfund Site under CERCLA including the collection of intact cores from the DAPL saturated aquifer soils to support bench scale column testing (Geomega, 2004b and Geomega, 2004c). In 2004, the results of this bench-scale column study to simulate DAPL pumping were published and an initial estimate of DAPL removal rates was established in response to MassDEP comments (Geomega, 2004a). These results were incorporated into a conceptual plan to conduct a pilot test at field scale using a single extraction well, including identifying a proposed location for the extraction well (MACTEC, 2004). Additional seismic refraction studies were conducted in 2005 in an attempt to better define the location for an extraction well on 8 Jewel Drive within a low point in the bedrock depression that contained the DAPL pool.

The bench scale column studies focused on the geochemical effects of displacing DAPL in the soil cores with diffuse layer and fresh water into former DAPL saturated soil with continued pumping. The primary findings of the column testing included:

- after 1.5 pore volumes for flushing (1 volume representing initial displacement of DAPL), approximately 80 % of the aqueous mass was removed and sub–DAPL conditions in groundwater might be achieved,
- after 1.5 pore volumes of flushing the column system began plugging due to precipitation of mineral solids,
- after 1.5 pore volumes of flushing mass removal rates became asymptotic,
- residual mineral phases, primarily acid sulfates, are expected to result in elevated concentrations for some solutes for an unknown period, and
- slower pumping rates favored the chance of avoiding perturbations of DAPL that could exacerbate ex-solution of solutes into overlying groundwater and additional formation of precipitates.

1.3.2 Design Phase

Detailed designs were developed for the Pilot Test following listing of the Olin Chemical Superfund Site and negotiation of an Agreement on Consent (AOC) and Statement of Work (SOW) in 2007. USEPA rejected the first design, which incorporated a rail loading facility for the off-site transport of the DAPL for treatment and disposal. A second design was completed at USEPA's request that utilized storage tanks located on the private property (8 Jewel Drive) near the extraction well from which tanker trucks could be loaded for off-site DAPL transport (MACTEC, 2008). This design was rejected by the property owner. The final, and third design incorporated a DAPL conveyance pipeline to a storage tank located on the Olin Property and placement of the DAPL extraction pump, controllers, flow meter and well within a subsurface vault on the 8 Jewel Drive Property. This design required an additional access agreement with PanAM Railways to allow construction of the DAPL conveyance pipeline under the intervening railroad tail-track, which is considered an active, in service rail line.

1.3.3 Construction Phase

The first stage of construction was initiated in May 2011 and included installation of the extraction and nearby monitoring wells. As we installed the monitoring wells, we found that the depth to bedrock and extent of the bedrock depression was inconsistent with interpretations developed from seismic activities conducted previously. The actual depth to bedrock based on drilling observations was approximately 20% more shallow than what had been interpreted from the seismic data. A direct-push boring program was implemented to confirm the depth to bedrock in the vicinity of the extraction well and to re-evaluate options for locating the extraction well. The results of these investigations and the recommended re-location of the extraction well were communicated to USEPA and a revised location agreed upon in July 2011 as shown in **Figure 1-1** (MACTEC, 2011). The well was placed to avoid underground utilities and not be closer to the building than desired by the property owner who may consider a future building expansion. The well location is on the western side of the DAPL pool at the lowest elevation along that side of the bedrock depression. The interpreted middle of the DAPL pool and bedrock depression lies under the existing building at 8 Jewel Drive and it is not known whether the elevation of bedrock under the building is appreciably deeper. Given these site constraints, Olin, AMEC and USEPA concurred that the proposed well location was suitable for conducting the Pilot Test. With the final location of the extraction well resolved, construction of the Pilot System commenced. The construction of the entire DAPL pilot system was completed in October 2012.

1.3.4 Extraction Phase

The DAPL Extraction Phase of the Pilot Test commenced on November 6, 2012. Each pumping step period was completed over a predetermined number of operating days. The Pilot system did experience unanticipated, non-scheduled shut down periods primarily due to failure of the variable frequency drive for the extraction pump and an alarm condition caused by a low voltage

instrumentation wire short circuit resulting from water intrusion and corrosion of a wiring splice. Although these issues resulted in gaps in the pumping period, monitoring data indicate they did not adversely affect the continuity of the data collected. The DAPL extraction phase was completed on May 22, 2014. Rebound of the DAPL/Diffuse Layer interface is currently being monitored.

2.0 METHODS AND MATERIALS

This section reviews the essential components of the system design and functions including the DAPL extraction and conveyance system, and details of the monitoring well network that was used to monitor system performance. The system operations are also reviewed, including the pumping step rate change schedule, and the monitoring schedule, as well as discussion of system down-time.

2.1 System Design and Functions

Details of the extraction system are provided in construction plans and specifications in Appendix A. Major components of the system, including the DAPL extraction and storage system, and monitoring network are described below and in subsequent sections.

2.1.1 DAPL Extraction, Storage and Shipping

The DAPL extraction well and associated monitoring well network are located on the property at 8 Jewel Drive and are shown in relation to the revised bedrock contours and direct-push investigation locations in **Figure 2-1**. The extraction well (EW-1) is screened within the bottom five feet of the DAPL pool and is located within a 6-foot by 6-foot by 3-foot 11-inch deep enclosure vault with double-leaf access doors on the 8 Jewel Drive property. The extraction well was installed in the deepest accessible portion of the bedrock depression where DAPL approaches its maximum thickness. The ground surface elevation is approximately 88 feet MSL at the extraction well, and the top of the DAPL interface at the start of the test was approximately 55 feet MSL and the top of bedrock near 43 feet MSL. The DAPL pool has an estimated thickness of 12 feet.

The extraction well is a 6-inch diameter, Schedule 40 polyvinyl chloride (PVC) well with a 5-foot long, continuous slot (0.010-inch) well screen. The top of screen was installed at a depth of 40.9 ft below ground surface. The extraction well was installed by rotosonic drilling methods to minimize physical disturbance of the formation. The extraction well includes a two-foot sump installed into the top of bedrock. Above the sump, the well screens the bottom 5 feet of the DAPL which sits above the top of rock and a thin basal till zone. The sand pack was constructed from #00 U.S Silica Filpro™ well sand, extends two feet above the top of screen and is sealed with three feet of bentonite chips. The remainder of the well annulus is grouted to the surface with a cement/bentonite grout. A ½-inch diameter PVC drop tube is positioned within the bottom of the well screen and connected to the peristaltic pump.

The extraction pump is an electrically-operated variable speed peristaltic type pump with a maximum flow rate of 11 gpm and rated discharge pressure of 230 pounds per square inch (psi). The pump rotation speed and discharge is regulated by a variable frequency drive that is set and monitored by a control panel located adjacent to the DAPL storage tank at the Olin Property. An ultrasonic flow meter located in the vault measures flow rate. These rates were checked by manual measurement from a T-valve at the pump discharge and by tracking DAPL

tank storage volumes. The use of a peristaltic pump isolates the mechanical pump parts from the DAPL to address potential corrosion-related issues. The pump discharges through a heat-traced conveyance system comprised of a 1½-inch diameter high density polyethylene (HDPE) carrier pipe contained within a 4-inch diameter PVC containment pipe. The carrier pipe runs in an underground utility trench from the pump enclosure vault through a series of Inspection/Cleanout (I/CO) structures to I/CO-3 located on the 51 Eames Street Olin property. From there, the carrier pipe runs above ground on the Olin property where it discharges into an above-ground 8,700 gallon dual-wall HDPE storage tank located on the dock of the West Warehouse building.

The height of extracted DAPL in the dual-wall storage tank is measured with a sonic liquid level sensor and volume is calculated by comparison to a control chart. These measurements were back checked with the flow meter and expected time duration to fill the tank at a given flow rate.

The tank is equipped with a high level and high-high level switch and alarms that would initiate alarm condition alerts through an auto-dialer, and then initiate an automatic shutdown of the extraction pump. Safety interlocks also included warning and system shut downs in the event of high pressure and low pressure/ no-flow conditions at the pump, failure of the heat trace system or sensors, failure of the VFD, or pump motor high temperature conditions.

The DAPL tank discharge system includes a manually operated vacuum release valve and a discharge shut-off valve on the discharge line. During unloading operations, the vacuum pipe from the tanker truck was connected to the DAPL tank discharge pipe, and a portable spill pan was placed under that connection. The discharge valve was then opened and the discharge pipe vacuum release valve closed. After loading the allowable volume of liquid to the tanker truck, the vacuum release valve was opened and the remaining DAPL in the pipe evacuated prior to final shut down of the vacuum transfer pump. The discharge valve was then closed and the transfer pipes disconnected.

2.1.2 Monitoring Well Network

The monitoring system for the Pilot Test required installation of a specialized monitoring network including induction logging wells and closely spaced multi-port wells to observe conditions in proximity to the extraction well with a high degree of resolution.

The monitoring network around the pumping well includes two multilevel piezometers (ML-1 and ML-2) and two induction logging wells (ILW-1 and ILW-2). The configuration of the monitoring well network was adapted to a revised location for the extraction well agreed upon with USEPA. The multilevel piezometers are located at distances approximately 6 and 17 feet upgradient from the extraction well. The two induction monitoring wells are located at distances of approximately 19 and 34 feet upgradient from the extraction well. This configuration, as shown in **Figure 2-2**, pairs one induction logging well with a multilevel piezometer approximately 18 feet upgradient from the extraction well.

Well installation logs for the monitoring network are included in Appendix B. The multilevel wells were developed by purging prior to initial sampling and were not formally developed by removing larger volumes of water to negate vertical mixing within the interfaces.

2.1.3 Induction Logging Wells

The induction logging wells are two-inch diameter, flush threaded, Schedule 40 PVC risers with a solid cap bottom. These wells were filled with deionized (DI) water as they were constructed and installed down the borehole to help overcome buoyancy. The DI water remains in the wells for logging. The PVC induction wells were centered in the borehole and the annulus backfilled with # 00 U.S Silica Filpro™ well sand to near the ground surface. The drill casing was removed as the annulus was backfilled. The induction logging wells were completed within a flush-mounted road box. The road box was bedded in gravel to facilitate drainage.

The induction wells were inductively logged prior to and during the extraction test period. The induction logging data was plotted with depth from ground surface and the resulting profiles used to confirm changes in conductivity with depth in the DAPL pool as the test progressed. The changes in conductivity with depth was used to indicate changes in the DAPL/Diffuse material interface in response to DAPL extraction. Two other wells, GW-43DR and GW-42D, were also inductively logged to observe conditions approximately 200 feet away in the Upper DAPL pool.

Induction logging was conducted with a Geonics EM39 probe that provides measurement of the electrical conductivity of the soil and fluids surrounding the monitoring well using an inductive electromagnetic technique.

The probe was lowered into the borehole and retrieved using a Geonics dedicated winch and console system. Measurements were recorded with a digital data logger while the probe was lowered (down-hole) and retrieved (up-hole). The standard operating procedure for induction logging is included in Appendix C. The data plots typically used the up-hole log for comparison since by the time the probe was retrieved it had been immersed in the borehole fluid longer and had attained more consistent equilibration with the temperature of the borehole fluids.

2.1.4 Multilevel Piezometer Construction

The 2-inch diameter multilevel piezometers were constructed using the Model 401 Waterloo System from Solinst™ with single stem PVC sample ports. The piezometers were constructed within a temporarily-cased 6-inch diameter borehole completed by rotosonic drilling methods. The casing was withdrawn as the annulus of the well was carefully backfilled using a tremie pipe with sand and bentonite chips around the sampling ports and riser pipe sections of the multilevel piezometer, respectively. The sand pack around the sample ports are # 000 U.S Silica Filpro™ well sand. After a sand pack was completed around a sample port, a bentonite pellet seal was placed between it and the next sand pack and sample port. The depth to ground surface and the diameter of the tubing were recorded in the log book and on the well construction diagram (Appendix B).

The number of multilevel ports that can be installed is dependent on the tubing diameter. A larger diameter port tubing (1/2" OD x 3/8"ID) was used to facilitate physical measurement of the potentiometric surface at three selected ports as shown on the construction diagrams. The other remaining port sample tubes are smaller diameter (3/8"OD x ¼"ID) to permit the tubing bundle to fit within the well casing and manifold. All ports are suitable for sample collection using a peristaltic pump. The larger diameter tubing includes one port in the overlying groundwater, one port in the Diffuse Layer, and one port in the DAPL to allow physical measurement of potentiometric surfaces in all three of these zones.

2.2 Systems Operation and Monitoring

This section summarizes the pumping step periods, the monitoring schedule and approach as well as deviations from the OM&M plan.

The technical approach to performance monitoring included a baseline phase prior to extraction system startup, and a DAPL extraction phase. The monitoring included collection of groundwater samples from multilevel piezometers and the extraction well, logging of induction wells, and gauging water levels. During each pumping step of the extraction phase, the frequency and type of monitoring was gradually reduced as changes in the behavior of the system became more predictable.

Deviations from the OM&M plan during pumping step 1 included several instances in the winter when frozen ground conditions (including significant accumulation of ice) prevented access to the flush mounted multiport monitoring wells for sampling and water level gauging. The most important deviation from the OM&M was by agreement with USEPA. Early in pumping step 2, the monitoring plan was adapted by focusing the sampling on ML-1 and ML-2 ports 3 through 6. Monitoring was also limited to collection of field parameters and on-site chemical analysis was discontinued as part of the regularly planned sampling. The basis for this change was agreement that the most vital and useful data collected to date was pH and specific conductance, and the induction logging.

2.2.1 Pumping Steps

As mentioned previously, the Pilot Test called for pumping at three increasing pumping rates of 0.5, 1.0 and 2.0 gpm for predetermined target durations of 90, 120 and 180 days respectively. The pumping period of the test was preceded by baseline monitoring of induction logging wells and the multilevel piezometers.

The schedule for initiating and completing the baseline monitoring and three pumping step phases is indicated below.

Period Description	Date Initiated	Date Completed
Baseline Monitoring	10/26/2012	11/02/2012
0.5 GPM Step 1	11/6/2012	03/04/2013
1.0 GPM Step 2	03/5/2013	12/02/2013
2.0 GPM Step 3	12/03/2013	5/22/2014[1.]

1. The final pumping step was terminated with USEPA concurrence and comment.

2.2.2 Non-Operating Time

Periods of non–operating time in each of the three pumping steps are indicated in **Table 2-1**, with an explanation of the cause and corrective actions of the problem that resulted in system down time. Some of the lead times for system corrective actions involving equipment replacement were due to manufacturer backlogs and delays. The operation periods were extended to account for these unscheduled delays such that the target durations were met (with the exception of the final 2 gpm phase, which was cut short due to excessive drawdown in EW-1).

These non-scheduled shut downs do not affect the interpretation or use of the data and in some cases may provide useful insights. If the pumping rate is within the DAPL gravity flow rate, there is no drawdown cone of depression in the DAPL around the extraction well, and ceasing pumping simply arrests DAPL flow by gravity drainage farther out in the pool. If the DAPL is being pumped at a rate faster than gravity driven flow, during a temporary shutdown DAPL will continue to flow toward the extraction well location as the depression in the DAPL surface tries to recover and rebound. These effects are being monitored over a longer time frame currently in the recovery period.

2.2.3 Monitoring Schedule and Approach

Baseline Period

The baseline monitoring consisted of two induction logging events at IL-1, IL-2, GW-43DR, and GW-42D, and two multilevel piezometer sampling events at ML-1, ML-2 and MP-2 prior to system start up. The multilevel monitoring program included collection of samples from all ports within ML-1 and ML-2 in the DAPL, Diffuse Layer, and overlying groundwater zones. Monitoring of water levels occurred in one port from each zone (ports 4, 9 and 12) in ML-1 and ML-2, the extraction well, and one event in GW-343DR and GW-42. The schedule for baseline water quality sampling is provided in **Table 2-2**.

The baseline data served two primary purposes including:

- providing an initial assessment of variability in monitoring parameters in individual multilevel piezometer ports; and
- estimating the elevation of the DAPL/Diffuse Layer and Diffuse Layer/overlying groundwater interfaces based on chemical and induction logging data.

The schedules for induction logging, multilevel piezometer sampling and water level gauging varied, since the frequency of sampling decreased as each pumping step progressed, and confidence increased in the existence of trends within the data. Prior to and immediately after increasing the recovery pumping rate to the next step, a round of water level, induction logging, and multiport groundwater samples were generally collected.

Pumping Step 1

Water quality monitoring was conducted in accordance with methods and procedures outlined in the OM&M Plan (AMEC, 2012), and initially included collection of samples for on-site and off-site analysis from ML-1, and ML-2, including all ports for the first three days following start of the first pumping step. Analysis included sulfate, chloride, ammonia, and ferrous and total iron by Olin personnel using HACH field kits with a portable spectrophotometer and ion specific probes. The purpose in monitoring these parameters was to provide data that could be relevant to the role of water quality changes and potential mineralization within the aquifer. The DAPL is iron rich and precipitous changes in the ferrous and ferric iron ratios and/or concentrations could be indicative of solid hydroxide formation. In less dilute waters, increases in sulfate could indicate dissolution of precipitated acid sulfate phases. Ammonia and chloride are conservative and should not be affected by such pH and redox sensitive reactions.

A calibration check sample was run at a frequency of 5 percent (one every twenty samples), or once per day if less than twenty samples are analyzed. An AMEC chemist provided training and conducted periodic review of the data and results, the laboratory analytical notebook, records, as well as raw and calculated final results. Field duplicate samples were collected for on-site analysis at a frequency of five percent for each parameter to assess the measurement precision of the overall sampling and analytical system. Water quality parameters including pH, specific-conductance, oxidation-reduction potential (ORP), temperature, and turbidity were obtained with a calibrated water quality meter in a flow-through cell prior to sample collection.

QA split duplicate samples were collected for off-site analysis by Test America at a frequency of 10 percent from the two baseline monitoring events, and the first and a middle sample event from the first step of the DAPL recovery. The off-site samples included analysis of sulfate, chloride, ammonia, chromium, calcium, and sodium.

The schedule for water quality sampling during pumping step 1 is provided in Table 2-3.

During pumping step 1, induction logging was conducted 12 times in the induction logging wells and five times at GW-43DR and GW-42D. The schedule for induction logging is provided in Table 2-4. The schedule for water level gauging is provided in Table 2-5.

Pumping Step 2

Upon conclusion of the first pumping step, the on-site analytical data and the water quality monitoring parameter data were reviewed with USEPA and it was apparent the most reliable indicators in system response to pumping were pH and specific conductance. Therefore during the second pumping step, by agreement with USEPA, collection of groundwater samples for on-site and off-site analysis ceased, and was replaced by monitoring water quality parameters only.

The last regularly scheduled sampling event for on-site groundwater analysis occurred on March 22, 2013. Prior to terminating the second pumping step, EW-1, ML-1, ML-2 Ports 3 through 6 were again sampled on November 1, 2013. No on-site groundwater analysis occurred from March 22 to November 1.

A summary of the water quality monitoring schedule for the second pumping step is presented in Table 2-6.

During pumping step 2, induction logging was conducted 14 times in the induction logging wells and six times at GW-43DR and GW-42D. The schedule for induction logging is provided in Table 2-4. The schedule for water level gauging is provided in Table 2-5.

Pumping Step 3

Water quality monitoring during pumping step 3 was conducted almost entirely by measurement of water quality parameters as indicated in Table 2-7. EW-1 and MP-2 Ports 1, 3, 4 and 6 were also sampled for on-site analysis on May 14, 2014, toward the end of the test for comparison purposes.

During pumping step 3, induction logging was conducted 9 times in the induction logging wells and 4 times at GW-43DR and 3 times at GW-42D. The schedule for induction logging is provided in Table 2-4. The schedule for water level gauging is provided in Table 2-5.

Recovery Period

The OM&M Plan scope did not include monitoring the post pumping period of DAPL extraction, since the Pilot Test did not envision the large amount of drawdown that ultimately occurred in the DAPL in response to being pumped at 2.0 gpm. A decision to monitor recovery was made prior to terminating pumping step 3. Data in the recovery period is still being collected (water quality parameters and induction logging) and initial results are discussed in Section 3.

3.0 RESULTS

The following subsections present and discuss the results of monitoring conducted during the Pilot Test, including water quality monitoring, induction logging and water level gauging. The most instructive data collected, as indicated in Section 2, are the water quality parameters for pH and specific conductance, in addition to the induction logging. Since one of the primary monitoring objectives of the Pilot Test is to understand the effect of pumping on the DAPL/Diffuse layer interface, the basis for the DAPL/Diffuse Layer and overlying groundwater criteria are reviewed below.

Geomega established criteria defining the DAPL/Diffuse layer interface (Geomega, 1999). Based on 1998 sample data, Geomega determined that sample populations of DAPL and Diffuse Layer material were statistically different at a 95 % confidence level when a specific gravity of 1.025 was used as a cutoff point between the sample populations. Chemical parameters were then evaluated to see which one produced significant correlations with DAPL or Diffuse Layer material based on this cutoff. Specific conductivity (>20,600 micro-mhos per centimeter [µmhos/cm]), sulfate (>16,000 milligrams per liter [mg/L]) chloride (>2,800 mg/L), ammonia (>1,250 mg/L), magnesium (>270 mg/L), and sodium (>1,700 mg/L) were all determined to have a strong correlation at these values to the 1.025 specific gravity DAPL cutoff point. Other parameters, such as pH, were determined to have only a weak correlation. Specific conductance will, therefore, be the primary criteria used to discriminate between DAPL, the Diffuse Layer, and overlying groundwater.

Criteria to discriminate between the Diffuse Layer and the overlying groundwater were based on the results of induction logging and multiple-level piezometer data collected during the March 2003 sampling event (Geomega 2003). At a 95% confidence level, a specific conductance value of 3,000 µmhos/cm was determined as the cutoff between the Diffuse Layer and overlying groundwater.

3.1 Water Quality Monitoring

The tabulated results for water quality monitoring are presented in a series of tables for each pumping step, listing wells and ports, sample and analysis dates and results. These tables include Table 3-1 for Pumping Step 1, Table 3-2 for pumping step 2, and Table 3-3 for pumping step 3. Only pumping step 1 contains a significant amount of on-site chemical data, while the other steps consist primarily of water quality monitoring data.

The baseline conductivity data placed the DAPL/Diffuse Layer interface within ML-2 Port 5 which is at an elevation of approximately 55 feet MSL (33 feet below ground surface (BGS)) and is consistent with earlier interpretations concerning the elevation of DAPL in the Off-PWD DAPL pool. Baseline data from ML-2 next to the extraction well placed the top of the Diffuse Layer/Overlying groundwater interface at an elevation of approximately 59.5 feet MSL (28 feet BGS). The thickness of DAPL at the extraction well was therefore approximately 12 feet, and the thickness of the Diffuse Layer approximately 4.5 feet prior to the start of the Pilot Test.

Time-trend plots of sulfate, iron, chloride, and ammonia concentrations from the on-site analysis were reviewed for ML-1 and ML-2 ports 1-5, and the variability in these parameters did not indicate consistent patterns compared to specific conductance and pH under a pumping regime of 0.5 gpm. In several of the DAPL ports in ML-1 and ML-2, total iron appeared to increase towards the end of pumping step 1, yet specific conductance in these ports had tended to decline slightly over the same time interval. Due to these observations, the on-site water quality data has not been formally plotted and presented in this report. That data is presented in tabulated form only.

Plots of water quality parameters for ML-1, ML-2, EW-1, and MP-2 for specific conductance and pH are, however, provided in Appendix D for the entire Pilot Test. These plots focus on ports that straddle the DAPL and Diffuse Layer interface (ports 1 through 6).

EW-1

The plot for pH in EW-1 remained essentially unchanged throughout the entire Pilot Test, while specific conductivity in EW-1 remained constant only during the first pumping step with a rate of 0.5 gpm. The specific conductance in EW-1 declined approximately 10-20% over the second pumping step of 1.0 gpm and 30-40% over the third pumping step of 2.0 gpm.

Since the cessation of pumping, specific conductivity in EW-1 has recovered to 90% of its original baseline value.

ML-2 and ML-1

Specific conductivity and pH plots for ports 1 through 6 in ML-2 and corresponding ports in ML-1 were essentially identical. Based on plots provided in Appendix D, there was no definitive change in specific conductance within each port during the first pumping step at 0.5 gpm.

During the progress of the Pilot Test (primarily during pumping step 2 and pumping step 3, a large, gradual, and pronounced decrease occurred in specific conductivity in all six ports in ML-1 and ML-2, to the point where at the end of the Pilot Test active extraction period, DAPL was no longer present in any port in ML-1 or ML-2. This change is mirrored, as expected by an increase in pH.

In ML-1 there was no distinguishable pH increase in any port during pumping step 1, however through the progress of steps 2 and 3, pH increased in all ports initially in DAPL (ports 1 through 5), with the most pronounced increase in port 4 initially just below in the DAPL/Diffuse Layer interface. Port 6, which had a higher initial pH indicated relatively little to no change in pH through the pumping phase. ML-2 indicated similar pH changes in ports 1 through 4.

MP-2

Historically, since it was constructed, port 5 in MP-2, has not yielded enough water to allow sampling of that port. Port 4 is in DAPL, while port 6 is in the Diffuse Layer. Thus the DAPL/

Diffuse Layer interface in MP-2 is in port 5 at an elevation between 54.14 and 57.14 feet MSL, which corresponds well to the interface elevation observed in ML-1 and ML-2. Specific conductance increased in ports 3, 4, and 6 in MP-2 during the first pumping step of 0.5 gpm, then declined in pumping steps 2 and 3. Port 4 transitioned from DAPL to Diffuse Layer during pumping step 2. Port 3 remained in DAPL throughout pumping steps 2 and 3, although specific conductance in port 3 was reduced by approximately 50% from baseline values over that period. Port 3 is at an elevation of 51.64 feet MSL. The specific conductance in port 1 at the end of pumping step 3 was consistent with historical data from 2010. Port 1 is at an elevation of 46.64 feet MSL.

The pH measured in ports 3, 4, and 6 all remained unchanged during pumping step 1, but increased noticeably in ports 4 and 6 in pumping step 2, and leveled off in pumping step 3. pH increased gradually in port 3 during pumping step 3.

3.2 Induction Logging

The induction logging data is very useful in confirming the response of the DAPL under pumping conditions over the duration of the test. The induction logs, provided in Appendix E, show similar patterns of reduction in groundwater conductance with depth over time during progress of the Pilot Test. The induction log units are different than those measured in water, and since the measurement is induced and in-situ it also reflects effects imposed by the electrical properties of the saturated geologic formation. Therefore, there is not a direct correspondence between conductance values measured in-situ, and specific conductance values in water sampled from various ports.

The fall 2012 baseline induction logs for IL-1 show a change in slope (increasing conductivity) at a depth from 25 to 26 feet bgs, which is just above the interpreted elevation of the top of the Diffuse Layer (28 feet bgs). Another slope change occurs from 31 to 33 feet bgs in the transition zone from Diffuse Layer into DAPL. The baseline DAPL elevation determined from multiport sampling is at 33 feet bgs. Below 33 feet the slope of the curve is very consistent, with increasing conductivity with depth, until the logging tool reaches the physical limitation of the borehole bottom where conductivity drops off. The baseline logs for IL-2 show a similar shape and elevation at which changes in slope or inflection points occur.

The IL-1 and IL-2 induction logs included in Appendix E plot induction measurements with depth (feet bgs) over the entire test, and show little change or decrease in conductivity with depth over time during pumping step 1. During pumping step 2 at 1.0 gpm a progressive reduction in conductivity with depth in both the shallower and deeper zones within the DAPL is apparent. This decreasing conductivity pattern continues and becomes more pronounced in pumping step 3.

3.3 Water Levels

Water level gauging was conducted in the baseline monitoring and prior to and after step changes. A tabulation of water elevation measurements is provided in Table 3-4. Calculated vertical hydraulic gradients within the multilevel ports and vertical components toward the extraction well are indicate in Table 3-5. Hydraulic gradients, as expected increased with increases in pumping rates, inducing a vertical hydraulic gradient and movement of overlying groundwater toward the extraction well. These gradient and flow directions calculated from the data are depicted in three hydrogeologic cross-sections for illustration purposes during the second pumping step in Figures 3-1 through 3-3.

3.4 DAPL/Diffuse Interface Changes Due to Pumping

As described in Section 3.1, the DAPL and Diffuse interface remained stable, within measurement limitations, during pumping step 1 at 0.5 gpm. The DAPL/ Diffuse Interface declined by one port (port 4) in ML-1 and ML-2 during pumping step 2 at 1.0 gpm based on specific conductance data. Based on specific conductance, the DAPL/ Diffuse interface declined by three additional ports (port 1, 2, and 3) in ML-1 and ML-2 during pumping step 3 at 2.0 gpm data. Pumping step 3 was terminated prematurely due to concerns that Diffuse Layer material was already impinging on the well screen in EW-1. Continued pumping at EW-1 at 2.0 gpm was clearly not sustainable and it was only a matter of time before the material being extracted would be so diluted as to not meet the criteria of DAPL.

3.5 Rebound Monitoring

Rebound monitoring is still in progress. Data plots in Appendix D indicate since the cessation of pumping, specific conductivity in ML-1 and ML-2 has continued to recover in ports 1, 2, 3 and 4. Specific conductivity values in ports 1 and 2 have returned to a DAPL condition; however, it is too early in the recovery process to determine if specific conductance in ports 3 and 4 will increase to values representative of DAPL.

Since the cessation of pumping, specific conductivity in MP-2 continued to decline in ports 3 and 4, and remained stable in port 5 (Appendix D). These trends appear to be stabilizing in these three ports based on most recent data. These data seem to reflect MP-2 is still experiencing a pumping-like response as DAPL continues to flow by gravity toward the depression in the DAPL surface caused by over pumping EW-1 at a rate that exceeded the DAPL gravity drainage rate.

The induction logs show the same pattern as the multilevel data. During the recovery period, a larger increase in conductivity is apparent in the deeper portions of the DAPL pool near the extraction well, and a slower, more gradual increase in conductivity is occurring at progressively shallower elevations, once occupied by DAPL.

4.0 CONCLUSIONS AND RECOMMENDATIONS

This section provides summary conclusions and recommendations for use of the Pilot Test data in the OU3 Feasibility Study. This section reviews the total DAPL removed, estimates the total uniform decline in DAPL elevation this volume should represent, and discusses factors that affect the efficiency of DAPL removal.

4.1 Total DAPL Removed

Based on the transportation and disposal records, a total of 596,727 gallons of DAPL had been removed from the off-PWD DAPL Pool. Based on the specific conductance data obtained in EW-1 during pumping step 3, the DAPL removed during the latter part of the Pilot Test had been diluted by 30-40%, therefore the actual in-place volume of DAPL removed by the Pilot Test is somewhat less than the total liquid removed.

Based on the revised bedrock contours developed during installation of the extraction well and depicted in Figure 4-1, a re-evaluation of the DAPL pool volume has been conducted. The volume estimate is based on a simple end-area calculation using the contours as slices of DAPL within the pool, using the 55 foot elevation for the top of the DAPL pool. These calculations are presented in Table 4-1 and compared to an earlier estimated DAPL volume based on the prior interpretation of the bedrock contours.

Based on the revised shallower depth and more limited extent of the DAPL pool the current estimate of the DAPL pool volume is approximately 3.1 million gallons.

Table 4-2 presents an estimate of the uniform DAPL pool elevation change that would be required for the volume of DAPL removed during the Pilot Test and the degree to which that DAPL was diluted by intrusion of overlying Diffuse Material and groundwater. These estimates range from 1.66 feet to 1.33 feet depending on the degree of dilution (20% assumed).

The decline in DAPL elevation in MP-2 over the test was from port 4 to port 3 and has not recovered to date. The elevation difference between the center of the two ports is 2.5 feet, and the ports themselves are screened over a six inch sand pack. Since the interface could be at any elevation within the sand pack of the screened ports, the measurement accuracy of this observed DAPL decline at MP-2 is between 1.5 and 2.5 feet. This is within the range calculated on Table 4-2.

4.2 DAPL Removal Efficiency

The efficiency of DAPL removal is dependent on a sustainable pumping rate, drawdown, and long-term dilution.

At the initial pumping rate of 0.5 gpm, there was no observed drawdown of the DAPL interface near the extraction well (i.e., in ML-1 and ML-2). This indicates the pumping rate was close to but did not appear to exceed the rate of gravity drainage of DAPL to the extraction well. This is the most efficient pumping scenario of the three rates tested based on the Pilot Test objectives.

At the pumping rate of 1.0 gpm, the DAPL being extracted experienced some dilution (about 10% based on specific conductance of EW-1), and the DAPL interface was drawn down about 1 to 2 feet in ML-1 and ML-2, with less apparent drawdown in MP-2. Based on this data, the 1.0 gpm pumping rate was in excess of the rate of gravity drainage to the extraction well, and, would not be an efficient long term pumping rate due to both dilution and eventual excessive drawdown of the DAPL around the extraction well. `

The 2.0 gpm pumping rate resulted in more than five feet of DAPL drawdown in the immediate vicinity of the extraction well within a relatively short time period after increasing the pumping rate. If the pumping test progressed for an extended time at 2.0 gpm, the liquid removed would no longer be classified as DAPL due to dilution. In the short term, 2.0 gpm would not be an efficient pumping rate due to dilution, and in the longer term would put the extraction well at risk of fouling as higher pH, oxygenated, overlying groundwater is entrained in the well screen and mixed with Diffuse Layer material and DAPL. Long term, pumping at an unsustainably high rate could also lead to instability in the DAPL surface and convective mixing with potential for increased mineralization within the formation, the extraction well sand pack, and the conveyance system piping.

The total cost of transport and disposal of diluted DAPL, compared to undiluted DAPL, is directly proportional to the dilution. If the DAPL is diluted by over pumping, a correspondingly larger volume of liquid must be pumped and disposed of. The long term cost of transporting and disposing of DAPL more than doubles within 6 months at 2.0 gpm when the DAPL becomes diluted by 50%.

4.3 Effect of Pumping Rate on Interface Stability

The pumping rate has a profound influence on the stability of the DAPL and Diffuse Layer interface. A stable interface would have the same uniform drawdown measured over time at the extraction well as out in the DAPL pool. DAPL is denser than water, and to remove it efficiently requires a different strategy. Owing to its greater density, it should be pumped at a rate that allows it to flow by gravity along the bottom of the bedrock depression toward the extraction point without drawing the shallower interface downward around the extraction well.

Based on the Pilot Test results, the DAPL interface should be stable over long periods of time under pumping conditions at, or less than, 0.5 gpm. The pumping rate of 1.0 gpm was causing progressively greater DAPL drawdown near the extraction well than at MP-2 and therefore exceeded the gravity drainage rate to the extraction well.

4.4 Recommendations

The Pilot Test results support a conclusion that long-term pumping of DAPL is both technically feasible as long as the pumping rate does not exceed the gravity drainage rate of the DAPL. The cost of DAPL extraction is a function of transport and disposal costs long term. If DAPL is diluted long term by excessive pumping rates, the cost of DAPL extraction will increase in

proportionally to the amount of dilution and the volume of material that is extracted will be proportionally higher. Such additional costs would need to be considered in the FS. In addition, excessive pumping rates (between 1 and 2 gpm), that were experienced during the Pilot Test pose potential for causing long-term operational problems and increases in operational costs (well replacement, well rehabilitation, long recovery periods when DAPL cannot be extracted).

Data currently being collected during the recovery period indicates there is no advantage to cycling the pumping to a higher rate that exceeds the gravity drainage rate of DAPL and then having to wait long periods for the DAPL to recover. In addition, data from earlier column studies (Geomega, 2004b) indicate that such pore volume exchange of oxygenated groundwater through zones occupied by DAPL and Diffuse material ganglia may result in significant mineralization and may have a negative effect on the efficiency of dissolved mass removal rates. The dilution of the pumped DAPL itself means that much larger volumes of liquid would need to be removed and treated at large costs under a cycling approach. There is also the possibility that cyclical extraction may increase the potential for convective mixing in the zone(s) above the DAPL surface, which may in turn negatively impact environmental conditions downgradient of the upper DAPL pool. Cyclical extraction would most certainly result in additional mineralization in the saturated soils and result in less effective removal of solute mass long term.

The potential use of horizontal well screens does not change the physics of gravity drainage, and while such strategies may be appropriate for collecting water, they are not likely to provide significant benefit to DAPL removal over a vertical well. The pilot results indicate a short 4-inch diameter well screen placed at the bottom of the DAPL pool is an effective well construction method. Since the extraction approach relies on density driven flow, the slope of the bedrock depression is more important than the thickness of the DAPL in controlling gravity drainage rates. Therefore placement of the well near the edge of the DAPL pool did not limit the wells efficiency.

The baseline cost and performance evaluation for DAPL extraction should be based on a maximum 0.5 gpm extraction rate in the OU3 FS which has been demonstrated to be a sustainable extraction rate.

5.0 REFERENCES

AMEC, 2012. Operations, Maintenance and Performance Monitoring Plan, DAPL Extraction Pilot Test. Olin Chemical Superfund Site, Wilmington, MA, October 2012

Dorgarten, H, and Tang, C, 1991. Modeling the Density Driven Movement of Liquid Wastes in Deep Sloping Aquifers. Groundwater, Vol. 29, No.5 pg. 655-662. Sept-Oct 1991.

Geomega, 2004a. Memorandum to MADEP dated February 26, 2004. Responses to questions about DAPL remediation strategy.

Geomega, 2004b. Olin Wilmington Technical Series XXXII: Determining DAPL Removal Rates Using a Laboratory Column Test to Simulate Aquifer Pumping, Olin Corporation, Wilmington, MA. Geomega, Inc., Boulder CO. January 2004.

Geomega, 2004c. Olin Wilmington Technical Series XXXVII: Conclusion of the Laboratory Column Test Simulating Aquifer Pumping for DAPL Removal. Geomega, Inc., Boulder CO. December 2004.

MACTEC, 2004. Release Abatement Measure, Off Property West Ditch DAPL Recovery Prove Out. Wilmington – Olin Chemical, August, 2004.

MACTEC, 2008. DAPL Pilot Design Report, Olin Chemical Superfund Site, Wilmington, MA September, 2008

MACTEC, 2011 2011 GeoProbe Data, DAPL Extraction Pilot Test Well Area, Olin Chemical Superfund Site, Wilmington, MA July, 2011.

FIGURES

Legend

- Interpretive Refusal Contour Lines, Based on GeoProbe Borings (Ft. MSL)
- Inferred Refusal Contour Lines, Based on GeoProbe Borings (Ft. MSL)
- GeoProbe Location (Estimated Refusal Elevation, Ft. MSL)
- Inductance Logging Well Currently Installed
- Former Proposed Extraction Well Location
- Monitoring Well
- Revised Proposed Extraction Well Location

AMEC Environment & Infrastructure
271 Mill Road
Chelmsford, MA 01824

N

0 15 30 60 Feet

Figure 1-1
Results of Direct Push Investigation

Olin Chemical Superfund Site
Wilmington, Massachusetts

Prepared by BJR | Checked by PHT

Document: P:\OLIN\Wilmington\GIS\MapDocuments\Olin OPWD11X17Landscape.mxd PDF: P:\OLIN\Wilmington\GIS\Figures\Figure 1-1 - Results of Direct Push Investigation.pdf 11/4/2014 3:29 PM brian.roden

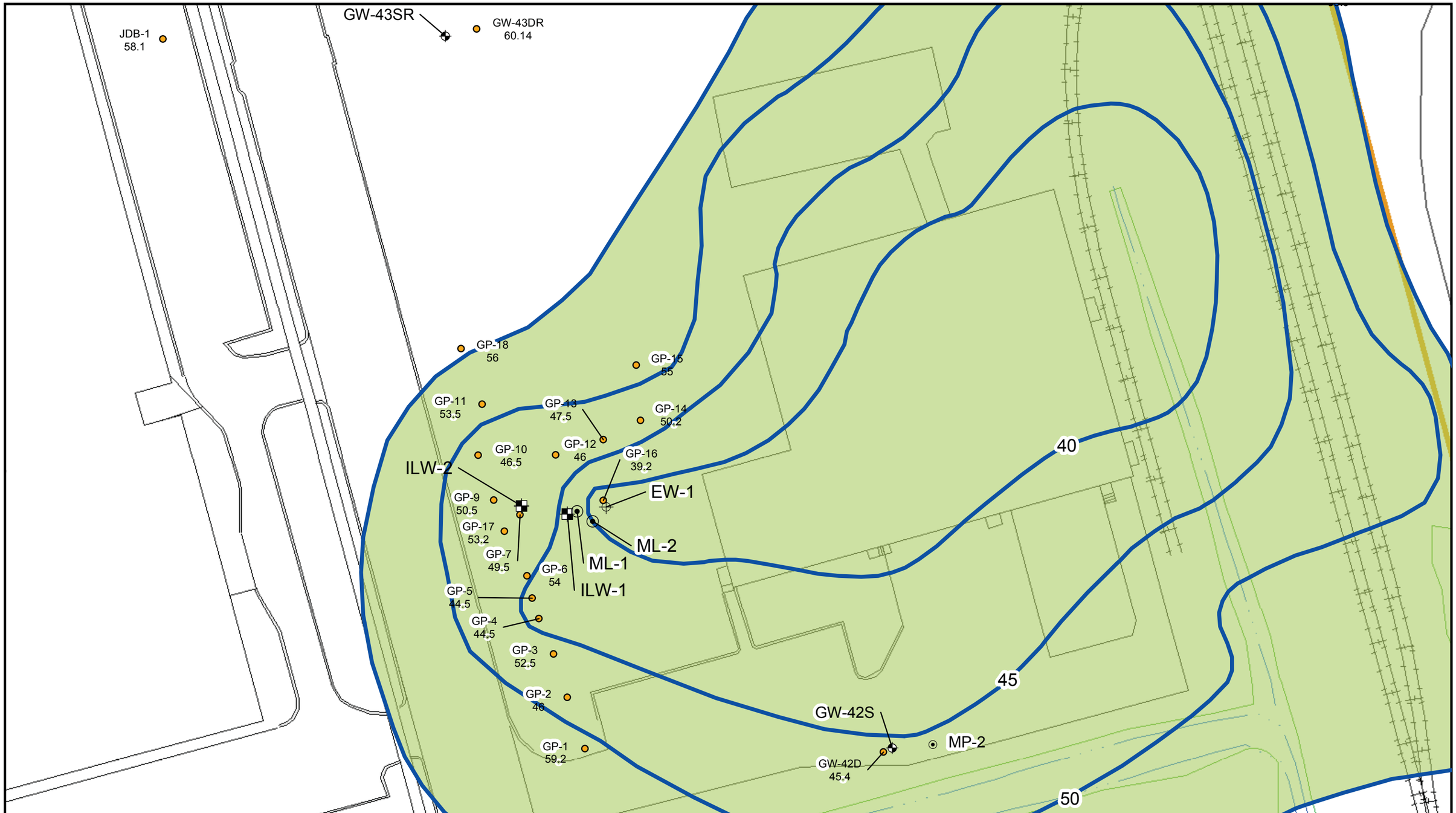

Legend

- Monitoring Well Location
- Induction Logging Well
- Multi Level Well
- Extraction Well
- Updated Bedrock Contours
- Interpreted Extent of DAPL Off Property Below 55 ft Contour
- Exploration Confirming Bedrock Elevation
- Railroad
- Paved Road
- Unpaved Road
- Sidewalks
- Surface Water
- Trails
- Wetland Symbol
- Wetland Boundary
- 51 Eames St. Property Boundary

AMEC Environment & Infrastructure
271 Mill Road
Chelmsford, MA 01824

N

0 20 40 80 Feet

Figure 2-1
Location of Extraction Well and Monitoring Well Network

Olin Chemical Superfund Site
Wilmington, Massachusetts

Prepared by BJR | Checked by PHT

Document: P:\old_Wakefield_Data\projects\OLIN\Wilmington\GIS\MapDocuments\DAPL_Recalc_11X17_LS.mxd PDF: P:\old_Wakefield_Data\projects\OLIN\Wilmington\GIS\Figures\Figure 2-1 - Location of Extraction Well and Monitoring Well Network.pdf 11/4/2014 3:18 PM brian.roden

LEGEND

ILW = Induction Logging Well
ML = MultiLevel Well
EW = Extraction Well
GP = GeoProbe
= Sand Filter Around ML Port Zones
= Bentonite Seal in ML Wells

Horz. 1" = 10'
Vert. 1" = 5'

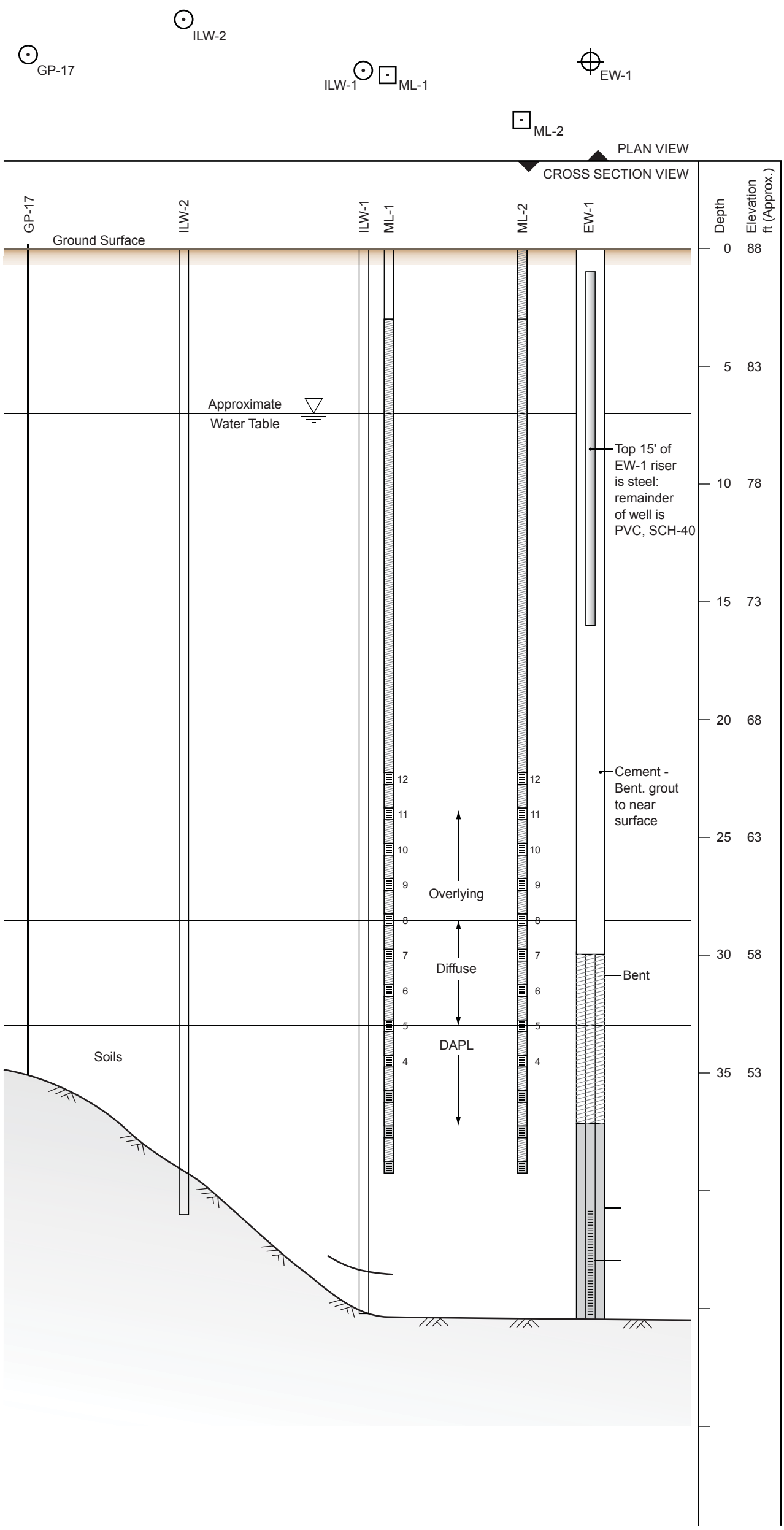

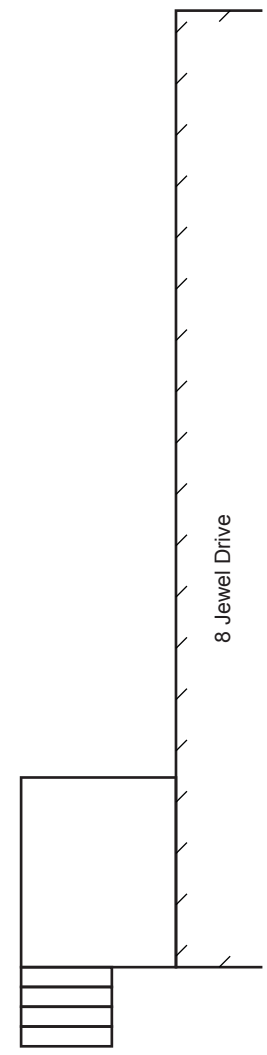

amec

LEGEND

ILW = Induction Logging Well
ML = MultiLevel Well
EW = Extraction Well
GP = GeoProbe
= Sand Filter Around ML Port Zones
= Bentonite Seal in ML Wells

Horz. 1" = 10'
Vert. 1" = 5'

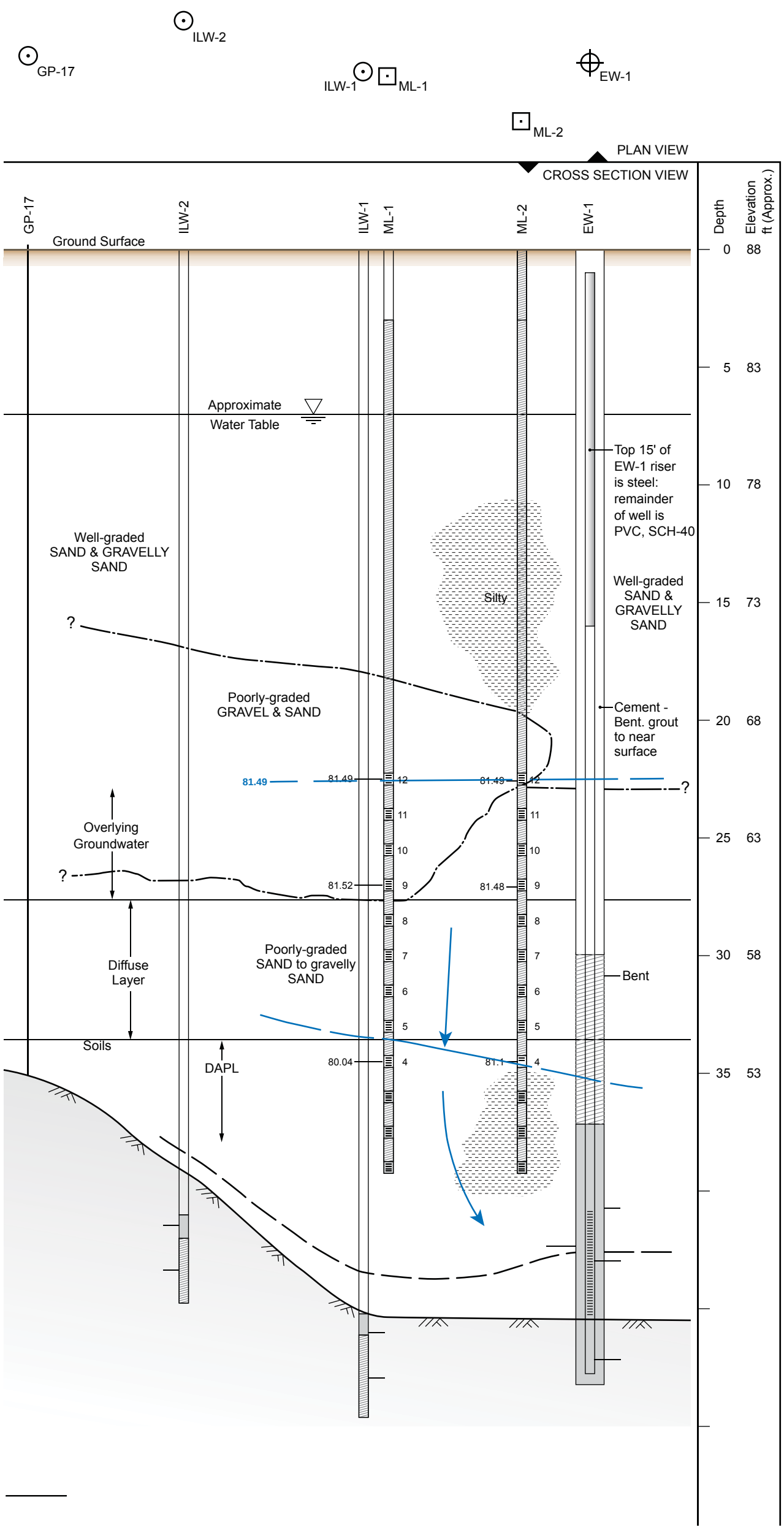

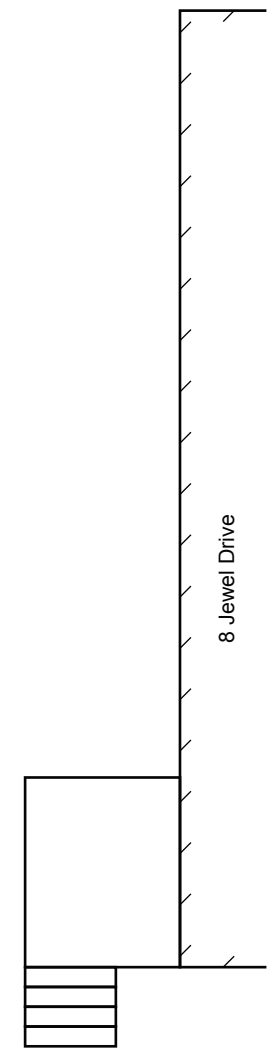

amec

LEGEND

ILW = Induction Logging Well
ML = MultiLevel Well
EW = Extraction Well
GP = GeoProbe
= Sand Filter Around ML Port Zones
= Bentonite Seal in ML Wells

Horz. 1" = 10'
Vert. 1" = 5'

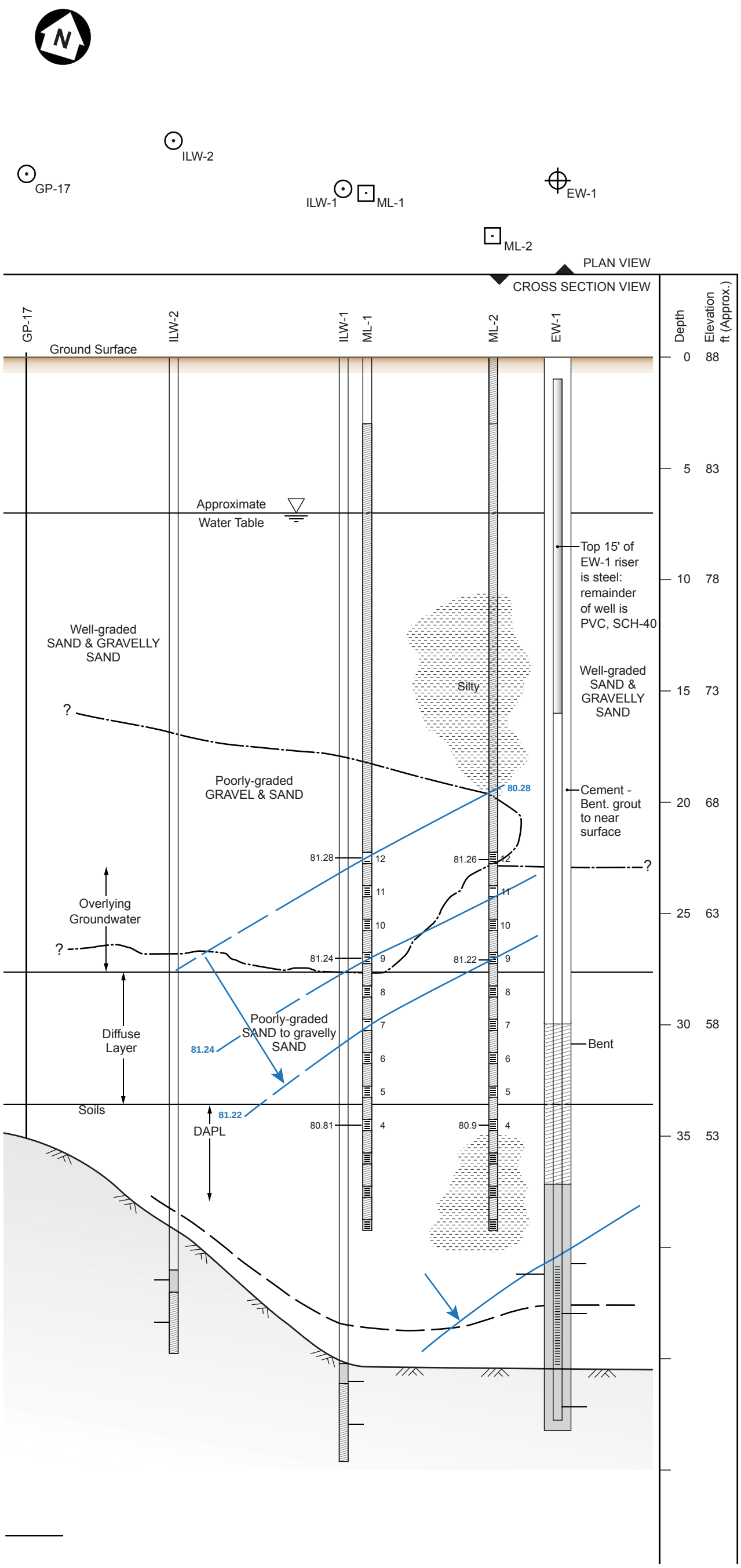

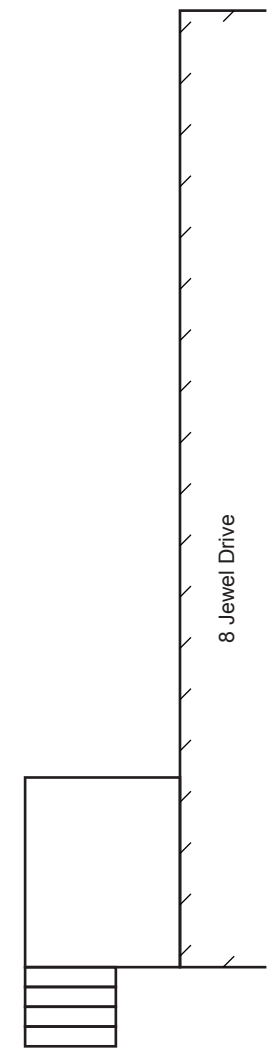

amec

LEGEND

ILW = Induction Logging Well
ML = MultiLevel Well
EW = Extraction Well
GP = GeoProbe
= Sand Filter Around ML Port Zones
= Bentonite Seal in ML Wells

Horz. 1" = 10'
Vert. 1" = 5'

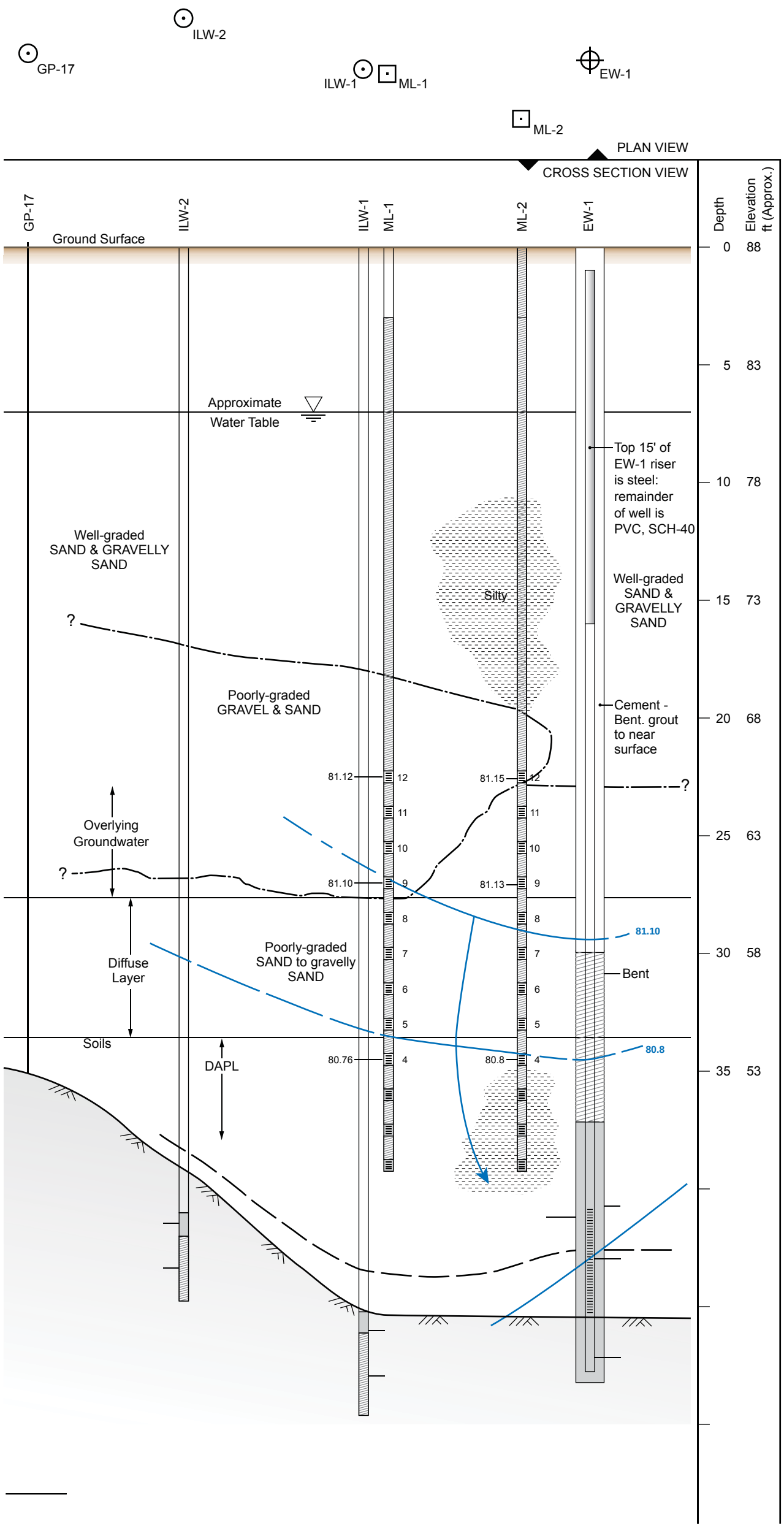

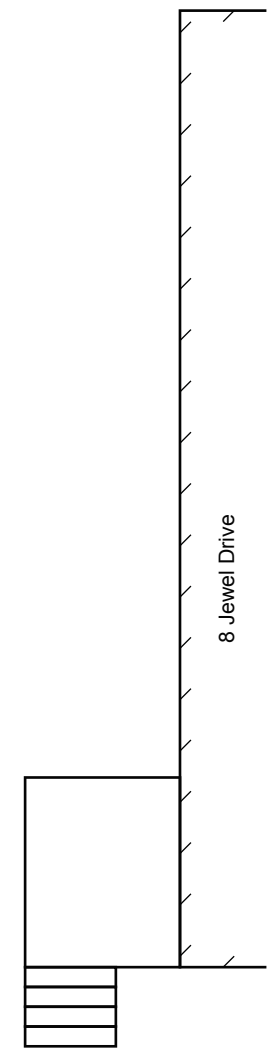

amec

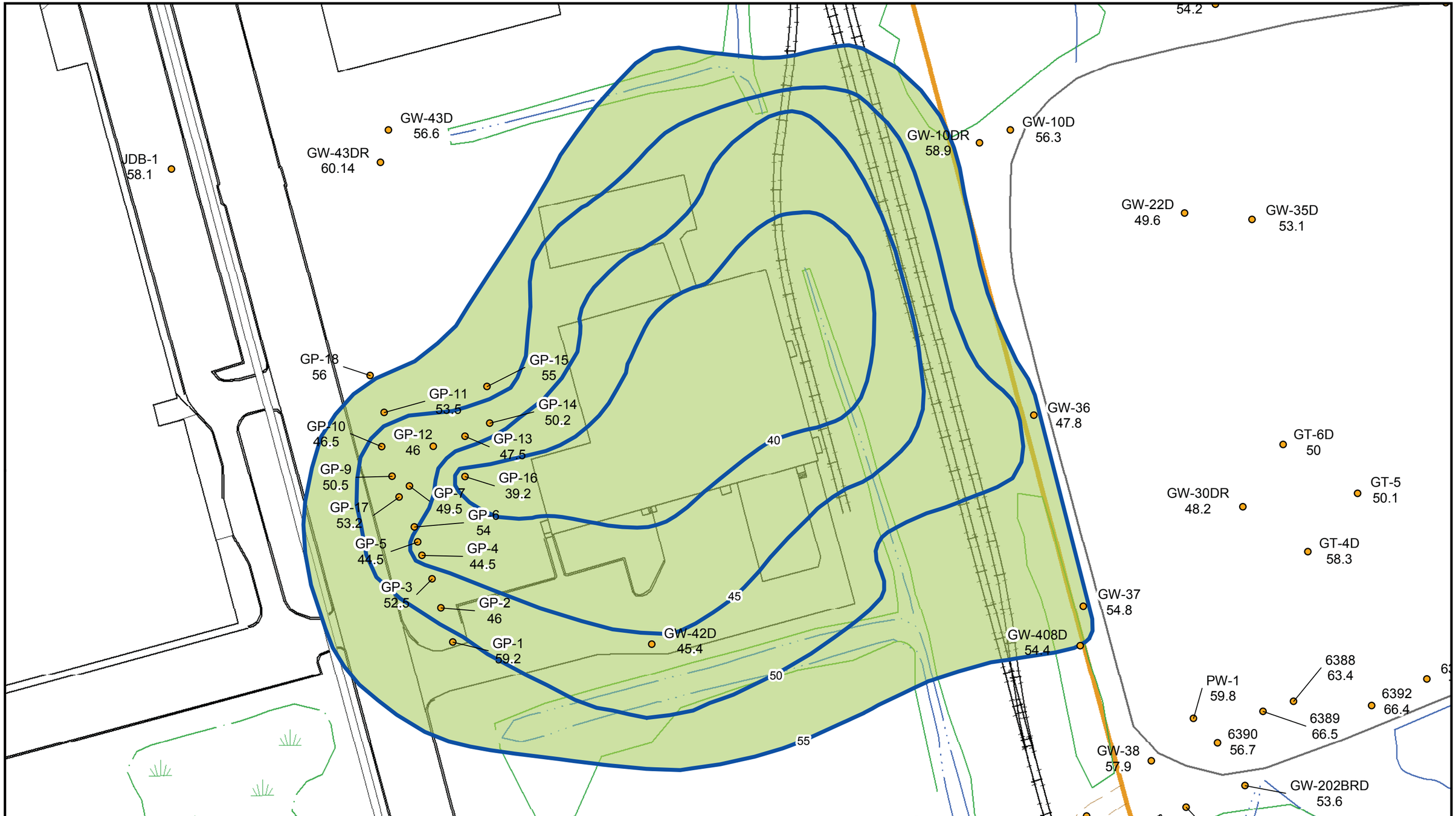

Legend

- Updated Bedrock Contours
- Bedrock Boring
- Interpreted Extent of DAPL Off Property Below 55 ft Contour
- Railroad
- Paved Road
- Unpaved Road
- Sidewalks
- Surface Water
- Trails
- Wetland Symbol
- Wetland Boundary
- 51 Eames St. Property Boundary

AMEC Environment & Infrastructure
271 Mill Road
Chelmsford, MA 01824

N

0 30 60 120 Feet

Figure 4-1
Interpreted Extent of Off-PWD DAPL Pool

Olin Chemical Superfund Site
Wilmington, Massachusetts

Prepared by BJR | Checked by PHT

Document: P:\old_Wakefield_Data\projects\OLIN\Wilmington\GIS\MapDocuments\DAPL_Recalc_11X17_LS.mxd PDF: P:\old_Wakefield_Data\projects\OLIN\Wilmington\GIS\Figures\Figure 4-1 - Intrepreted Extent of Off-PWD DAPL Pool.pdf 11/4/2014 3:40 PM brian.roden

TABLES

Table 2-1: Non-Operating Periods
DAPL Extraction Pilot Study
Performance Evaluation Report

Olin Wilmington Superfund Site
Wilmington, MA

Pumping Step	Non-Operating Period			Reason	Corrective Action
	Beginning	End	Days		
Step 1	12/3/2012	12/17/2012	14	VFD Failure	Replaced
Step 1	12/27/2012	1/6/2013	10	Personnel Absence - Holiday	
Step 2	3/11/2013	3/19/2013	8	VFD Failure	Replaced
Step 2	3/28/2013	4/10/2013	13	VFD Failure	Replaced
Step 2	8/9/2013	10/15/2013	67	VFD Failure	Replacement with Larger Unit (Unit Backordered); Electrical Wiring Changes
Step 3	25-Feb-14	10-Apr-14	44	Wiring Alarm, Short Circuit	Installed Additional Junction Box

Notes:
VFD = Variable Frequency Drive

Prepared by PHT 11/06/2014
Checked by JMC 11/07/2014

Table 2-2: Schedule for Baseline Water Quality Sampling
DAPL Extraction Pilot Study
Performance Evaluation Report

Olin Wilmington Superfund Site
Wilmington, MA

Location ID	10/25/2012	10/26/2012	11/1/2012	11/2/2012
EW1				
ML1 Port 1		B	B	
ML1 Port 2		B	B	
ML1 Port 3		B	B	
ML1 Port 4		B	B	
ML1 Port 5		B	B	
ML1 Port 6		B	B	
ML1 Port 7		B	B	
ML1 Port 8		B	B	
ML1 Port 9		B	B	
ML1 Port 10		B	B	
ML1 Port 11		B	B	
ML1 Port 12		B	B	
ML2 Port 1	B			B
ML2 Port 2	B			B
ML2 Port 3	B			B
ML2 Port 4	B			B
ML2 Port 5	B		B	
ML2 Port 6	B		B	
ML2 Port 7	B		B	
ML2 Port 8	B		B	
ML2 Port 9	B		B	
ML2 Port 10	B		B	
ML2 Port 11	B		B	
ML2 Port 12	B		B	
MP2 Port 1				
MP2 Port 3		B		B
MP2 Port 4		B		B
MP2 Port 6		B		B
MP2 Port 7		B		B
MP2 Port 10		B		B
MP2 Port 11		B		B
MP2 Port 12		B		B
MP2 Port 13		B		B

Notes:
B - Field chemistry and field parameters collected

Prepared by: BJR 11/03/2014
Checked by: PHT 11/03/2014

Table 2-3: Schedule for Pumping Step 1 Water Quality Sampling
DAPL Extraction Pilot Study
Performance Evaluation Report

Olin Wilmington Superfund Site
Wilmington, MA

Location ID	11/6/2012	11/7/2012	11/8/2012	11/13/2012	11/16/2012	11/19/2012	11/26/2012	11/27/2012	1/7/2013	1/8/2013	1/9/2013	1/28/2013	1/29/2013	1/30/2013	2/12/2013	2/13/2013
EW1	A	A	A	F	B	B		B				B			B	
ML1 Port 1	B	B	B	B	B	B		B		B			B			B
ML1 Port 2	B	B	B	B	B	B				B			B			B
ML1 Port 3	B	B	B	B	B	B		B		B			B			B
ML1 Port 4	B	B	B	B	B	B		B		B			B			B
ML1 Port 5	B	B	B	B	B	B		B		B			B			B
ML1 Port 6	B	B	B	B	B	B		B		B			B			B
ML1 Port 7	B	B	B	B	B	B		B		B			B			B
ML1 Port 8	B	B	B	B	B	B		B		B			B			B
ML1 Port 9	B	B	B	B	B	B		B		B			B			B
ML1 Port 10	B	B	B	B	B	B	B			B			B			B
ML1 Port 11	B	B	B	B	B	B	B			B			B			B
ML1 Port 12	B	B	B	B	B	B	B			B			B			B
ML2 Port 1	B	B	B	B	B	B		B	B			B			B	
ML2 Port 2	B	B	B	B	B	B		B	B			B			B	
ML2 Port 3	B	B	B	B	B	B		B	B			B			B	
ML2 Port 4	B	B	B	B	B	B		B	B			B			B	
ML2 Port 5	B	B	B	B	B	B		B	B			B			B	
ML2 Port 6	B	B	B	B	B	B		B	B			B			B	
ML2 Port 7	B	B	B	B	B	B			B			B			B	
ML2 Port 8	B	B	B	B	B	B		B	B			B			B	
ML2 Port 9	B	B	B	B	B	B		B	B			B			B	
ML2 Port 10	B	B	B	B	B	B		B	B			B			B	
ML2 Port 11	B	B	B	B	B	B		B	B			B			B	
ML2 Port 12	B	B	B	B	B	B		B	B			B			B	
MP2 Port 1																
MP2 Port 3						B					B			B		
MP2 Port 4						B					B			B		
MP2 Port 6						B					B			B		
MP2 Port 7						B					B			B		
MP2 Port 10						B					B			B		
MP2 Port 11						B					B			B		
MP2 Port 12						B					B					
MP2 Port 13						B					B			B		

Notes:
A - Field chemistry data collected
B - Field chemistry and field parameters collected
F - Field parameters collected

Prepared by: BJR 11/03/2014
Checked by: PHT 11/03/2014

Table 2-4: Schedule for Induction Logging
DAPL Extraction Pilot Study
Performance Evaluation Report

Olin Wilmington Superfund Site
Wilmington, MA

DATE	Period Description	Location ID			
		GW-42DR	GW-43DR	ILW-1	ILW-2
11/2/2012	0.5 GPM Step 1			X	X
11/5/2012	0.5 GPM Step 1			X	X
11/6/2012	0.5 GPM Step 1			X	X
11/7/2012	0.5 GPM Step 1			X	X
11/8/2012	0.5 GPM Step 1			X	X
11/12/2012	0.5 GPM Step 1	X	X	X	X
11/15/2012	0.5 GPM Step 1			X	X
11/19/2012	0.5 GPM Step 1	X	X	X	X
11/26/2012	0.5 GPM Step 1			X	X
12/19/2012	0.5 GPM Step 1	X	X	X	X
1/10/2013	0.5 GPM Step 1			X	X
1/30/2013	0.5 GPM Step 1	X	X	X	X
2/6/2013	0.5 GPM Step 1	X	X	X	X
2/19/2013	0.5 GPM Step 1			X	X
3/5/2013	1.0 GPM Step 2	X		X	X
3/7/2013	1.0 GPM Step 2			X	X
3/11/2013	1.0 GPM Step 2			X	X
3/18/2013	1.0 GPM Step 2	X	X	X	X
3/25/2013	1.0 GPM Step 2			X	X
4/24/2013	1.0 GPM Step 2			X	X
5/13/2013	1.0 GPM Step 2		X	X	X
6/13/2013	1.0 GPM Step 2			X	X
6/25/2013	1.0 GPM Step 2	X	X	X	X
7/16/2013	1.0 GPM Step 2	X	X	X	X
10/28/2013	1.0 GPM Step 2	X	X	X	X
12/2/2013	1.0 GPM Step 2		X	X	X
12/3/2013	2.0 GPM Step 3		X	X	X
12/5/2013	2.0 GPM Step 3			X	X
12/9/2013	2.0 GPM Step 3			X	X
12/16/2013	2.0 GPM Step 3	X		X	X
12/23/2013	2.0 GPM Step 3			X	X
1/13/2014	2.0 GPM Step 3		X	X	X
2/3/2014	2.0 GPM Step 3			X	X
3/4/2014	2.0 GPM Step 3			X	X
4/11/2014	2.0 GPM Step 3	X	X	X	X
5/2/2014	2.0 GPM Step 3			X	X
5/9/2014	2.0 GPM Step 3	X	X	X	X
7/23/2014	Recovery			X	X
7/31/2014	Recovery			X	X
8/14/2014	Recovery	X		X	X
9/5/2014	Recovery	X	X	X	X
9/11/2014	Recovery	X	X	X	X
10/21/2014	Recovery	X		X	X

Notes:
X = Logging conducted

Prepared by: LJ 11/04/2014
Checked by: PHT 11/05/2014

Table 2-5: Schedule for Water Level Gauging
DAPL Extraction Pilot Study
Performance Evaluation Report

Olin Wilmington Superfund Site
Wilmington, MA

Well Location	EW1	ML-1	ML-2	MP-2	GW-42D	GW-43DR
10/25/2012		X	X			
11/1/2012		X				
11/2/2012					X	X
11/6/2012	X	x	X			
11/7/2012	X		X			
11/8/2012	X		X			
11/12/2012					X	X
11/13/2012	X	X	X			
11/16/2012	X	X	X			
11/19/2012	NM		X	X	X	X
11/26/2012		X				
11/27/2012	X		X			
12/12/2011					X	
12/14/2011					X	
9/20/2012						X
12/19/2012					X	X
12/20/2011						X
1/3/2013			X			
1/7/2013	X		X			
1/8/2013		X				
1/9/2013				X		
1/10/2013					X	X
1/28/2013	X		X			
1/29/2013		X				
1/30/2013				X		
12/2/2013						
2/6/2013					X	X
2/12/2013	X		X			
2/13/2013		X				
2/20/2013	X					
3/5/2013	X	X	X		X	X
3/7/2013		X	X			
3/18/2013					X	X
3/27/2013	X	X	X			
4/17/2013	X	X	X	X	X	
4/24/2013	X	X	X			
5/13/2013					X	X
5/16/2013	X	X	X	X		
5/21/2013	X					
5/27/2013	X					

Table 2-5: Schedule for Water Level Gauging
DAPL Extraction Pilot Study
Performance Evaluation Report

Olin Wilmington Superfund Site
Wilmington, MA

Well Location	EW1	ML-1	ML-2	MP-2	GW-42D	GW-43DR
6/13/2013						
6/18/2013	X					
6/25/2013					X	X
6/26/2013	X	X	X			
7/5/2013	X					
7/12/2013	X					
7/16/2013					X	X
12/2/2013	X	X	X		X	X
12/3/2013	X	X	X		X	X
12/4/2013	X	X	X		X	X
12/5/2013	X				X	
12/6/2013	X	X	X		under water	X
12/11/2013	X	X	X		X	X
12/16/2013					X	pile
12/19/2013	X	X	X			
1/13/2014	X				under snow and ice	X
2/3/2014	X				under snow and ice	X
2/4/2014	X	x	*		under snow and ice	
4/9/2014					X	X
4/11/2014	X	X	X			

Notes:

Prepared by: LJ 11/04/2014
Checked by: PHT 11/04/2014

NM= not measured
*=no water level was obtained meter tested ok but would not detect water level

Table 2-6: Schedule for Pumping Step 2 Water Quality Sampling
DAPL Extraction Pilot Study
Performance Evaluation Report

Olin Wilmington Superfund Site
Wilmington, MA

Location ID	3/5/2013	3/7/2013	3/8/2013	3/22/2013	3/27/2013	4/24/2013	5/16/2013	6/6/2013	6/26/2013	7/18/2013	10/29/2013	11/1/2013
EW1	B	B		B		F	F	F	F	F	F	B
ML1 Port 1												
ML1 Port 2												
ML1 Port 3	B	B		B	F	F	F	F	F	F	F	B
ML1 Port 4	B	B		B	F	F	F	F	F	F	F	B
ML1 Port 5	B	B		B	F	F	F	F	F	F	F	B
ML1 Port 6	B	B		B	F	F	F	F	F	F	F	B
ML1 Port 7												
ML1 Port 8												
ML1 Port 9												
ML1 Port 10												
ML1 Port 11												
ML1 Port 12												
ML2 Port 1												
ML2 Port 2												
ML2 Port 3	B		B	B	F	F	F	F	F	F	F	B
ML2 Port 4	B		B	B	F	F	F	F	F	F	F	B
ML2 Port 5	B	B		B	F	F	F	F	F	F	F	B
ML2 Port 6	B	B		B	F	F	F	F	F	F	F	B
ML2 Port 7												
ML2 Port 8												
ML2 Port 9												
ML2 Port 10												
ML2 Port 11												
ML2 Port 12												
MP2 Port 1												
MP2 Port 3							F					
MP2 Port 4							F					
MP2 Port 6							F					
MP2 Port 7							F					
MP2 Port 10												
MP2 Port 11												
MP2 Port 12												
MP2 Port 13												

Notes:
B - Field chemistry and field parameters collected
F - Field parameters collected

Prepared by: BJR 11/03/2014
Checked by: PHT 11/03/2014

Table 2-7: Schedule for Pumping Step 3 Water Quality Sampling
DAPL Extraction Pilot Study
Performance Evaluation Report

Olin Wilmington Superfund Site
Wilmington, MA

Location ID	12/4/2013	12/6/2013	12/11/2013	12/19/2013	12/31/2013	2/4/2014	4/11/2014	5/5/2014	5/14/2014	7/22/2014	7/29/2014	8/7/2014	8/14/2014	8/20/2014	9/10/2014	10/20/2014
EW1	F	F	F	F	F	F		F	B	F	F	F	F	F	F	F
ML1 Port 1								F	F	F	F	F	F	F	F	F
ML1 Port 2									F	F	F	F	F	F	F	F
ML1 Port 3	F	F	F	F	F	F	F	F	F	F	F	F	F	F	F	F
ML1 Port 4	F	F	F	F	F	F	F	F	F	F	F	F	F	F	F	F
ML1 Port 5	F	F	F	F		F	F	F	F	F	F	F	F	F	F	F
ML1 Port 6	F	F	F	F	F	F	F	F	F	F	F	F	F	F	F	F
ML1 Port 7																
ML1 Port 8																
ML1 Port 9																
ML1 Port 10																
ML1 Port 11																
ML1 Port 12																
ML2 Port 1								F	F	F	F	F	F	F	F	F
ML2 Port 2								F	F	F	F	F	F	F	F	F
ML2 Port 3	F	F	F	F	F	F	F	F	F	F	F	F	F	F	F	F
ML2 Port 4	F	F	F	F	F	F	F	F	F	F	F	F	F	F	F	F
ML2 Port 5	F	F	F	F	F	F	F	F	F	F	F	F	F	F	F	F
ML2 Port 6	F	F	F	F	F	F	F	F	F	F	F	F	F	F	F	F
ML2 Port 7																
ML2 Port 8																
ML2 Port 9																
ML2 Port 10																
ML2 Port 11																
ML2 Port 12																
MP2 Port 1									B					F	F	F
MP2 Port 3	F	F						F	B					F	F	F
MP2 Port 4	F	F						F	B					F	F	F
MP2 Port 6	F	F						F	B					F	F	F
MP2 Port 7																
MP2 Port 10																
MP2 Port 11																
MP2 Port 12																
MP2 Port 13																

Notes:
B - Field chemistry and field parameters collected
F - Field parameters collected

Prepared by: BJR 11/03/2014
Checked by: PHT 11/03/2014

Table 3-1: Water Quality Monitoring Results for Pumping Step 1
DAPL Extraction Pilot Study
Performance Evaluation Report

Olin Wilmington Superfund Site
Wilmington, MA

Well ID	Port	Collection Date	Analysis Date	Period Description	Analysis Time	Sulfate (mg/L)	Chloride (mg/L)	Ammonia (mg/L)	Ferrous Iron (mg/L)	Total Iron (mg/L)	Conductivity (umohs/cm)	pH	Dissolved O2 (mg/L)	Turbidity (NTU)	ORP/Eh (mV)	Comments
EW	1	11/6/2012	11/7/2012	0.5 GPM Step 1	17:40	38000	12900	7950	1980	1760						
ML1	2	11/6/2012	11/7/2012	0.5 GPM Step 1	14:55	37000	10500	2195	1045	2120	65858	3.75	0.42	3.72	192	
ML1	3	11/6/2012	11/7/2012	0.5 GPM Step 1	14:25	31000	9500	12760	336	1510	56193	3.85	0.49	2.09	187.9	
ML1	4	11/6/2012	11/7/2012	0.5 GPM Step 1	14:15	21600	5060	7810	234	812	36659	4.07	0.55	0.63	177.1	
ML1	5	11/6/2012	11/7/2012	0.5 GPM Step 1	11:55	6200	1710	3140	78.5	173	14380	5.04	2.28	79.6	148.4	
ML1	5	11/6/2012	11/7/2012	0.5 GPM Step 1	12:00	6200	2410	3750	145	233						Duplicate
ML1	6	11/6/2012	11/7/2012	0.5 GPM Step 1	11:20	1900	808	813	63.5	62.5	6048	6.00	1.19	1.31	9.7	
ML1	7	11/6/2012	11/7/2012	0.5 GPM Step 1	11:10	750	434	301	18.1	17.8	3277	5.81	0.99	0.76	49.2	
ML1	8	11/6/2012	11/7/2012	0.5 GPM Step 1	10:50	850	303	116	13.1	29.3	2476	6.05	0.97	0.76	16.2	
ML1	9	11/6/2012	11/7/2012	0.5 GPM Step 1	10:10	260	479	31.7	9.2	16.4	1589	6.21	1.2	1.91	-10.3	
ML1	10	11/6/2012	11/7/2012	0.5 GPM Step 1	9:50	20	347	15.4	12.2	8.3	962	6.62	0.74	0.92	-75.3	
ML1	11	11/6/2012	11/7/2012	0.5 GPM Step 1	9:20	30	334	12.9	9.9	8.2	895	6.71	0.6	1.22	-84.8	
ML1	12	11/6/2012	11/7/2012	0.5 GPM Step 1	9:10	40	179	10.1	8.1	8.1	1168	6.27	2.6	1.69	-38.3	
ML2	1	11/6/2012	11/7/2012	0.5 GPM Step 1	17:15	19000	3100	1360	1770	5480	82600	3.68	0.33	10.8	201.6	
ML2	2	11/6/2012	11/7/2012	0.5 GPM Step 1	16:35	39000	13700	4250	1600	2060	75700	3.80	0.42	12.09	202.7	
ML2	3	11/6/2012	11/7/2012	0.5 GPM Step 1	16:19	19000	10200	5200	720	1060	62870	3.97	0.81	240	193.5	
ML2	4	11/6/2012	11/7/2012	0.5 GPM Step 1	16:00	14800	1310	836	212	574	35020	4.30	0.59	49.1	151.4	
ML2	5	11/6/2012	11/7/2012	0.5 GPM Step 1	15:50	5400	1360	732	136	162	15700	5.52	1.04	31.9	66	
ML2	6	11/6/2012	11/7/2012	0.5 GPM Step 1	15:30	1950	609	491	34	38	6419	5.92	1.31	6.1	49	
ML2	7	11/6/2012	11/7/2012	0.5 GPM Step 1	10:30	900	342	200	15.9	21.5	3700	6.08	0.63	39.7	32.2	
ML2	8	11/6/2012	11/7/2012	0.5 GPM Step 1	8:55	500	368	190	9.2	10.4	2620	5.53	0.7	1.48	113.4	
ML2	9	11/6/2012	11/7/2012	0.5 GPM Step 1	8:40	58	360	44.2	1.69	4.06	1191	6.01	1.47	3.86	84.2	
ML2	10	11/6/2012	11/7/2012	0.5 GPM Step 1	8:05	31	298	11.3	0.06	0.18	973	5.61	0.97	2.26	140.2	
ML2	10	11/6/2012	11/7/2012	0.5 GPM Step 1	8:20	39	332	18	0.04	0.04						Duplicate
ML2	11	11/6/2012	11/7/2012	0.5 GPM Step 1	7:30	37	333	10.4	1.49	2.23	946	5.93	0.91	15.1	82.9	
ML2	12	11/6/2012	11/7/2012	0.5 GPM Step 1	7:20	45	232	13.4	1.21	1.35	902	6.60	1.75	1.47	12	
EW	1	11/7/2012	11/13/2012	0.5 GPM Step 1	10:30	8000	17900	3900	220	270						
ML1	1	11/7/2012	11/8/2012	0.5 GPM Step 1	17:35	20000	5850	4360	1000	1070	73530	3.99	0.59	7.64	179.2	
ML1	2	11/7/2012	11/8/2012	0.5 GPM Step 1	17:25	52000	3470	11400	665	5160	66300	4.02	0.1	7.64	184.4	
ML1	3	11/7/2012	11/8/2012	0.5 GPM Step 1	16:55	4500	5640	4170	230	520	56570	4.11	0.08	30	173.5	
ML1	4	11/7/2012	11/8/2012	0.5 GPM Step 1	16:35	12600	1580	1608	81.5	968	35920	4.33	0.25	862	151.1	
ML1	5	11/7/2012	11/8/2012	0.5 GPM Step 1	14:45	2000	965	365.5	38.8	51	14110	5.30	0.06	99.8	113.6	
ML1	5	11/7/2012	11/8/2012	0.5 GPM Step 1	15:05	2450	720	233.5	32.8	73.5						Duplicate
ML1	6	11/7/2012	11/8/2012	0.5 GPM Step 1	14:25	150	238.5	106.5	19.2	38.8	5790	6.23	0.28	6.5	7.5	
ML1	7	11/7/2012	11/8/2012	0.5 GPM Step 1	13:55	370	65.5	357	19	21.1	5238	6.03	0.39	4.72	37.7	
ML1	8	11/7/2012	11/8/2012	0.5 GPM Step 1	13:35	150	300	375	2.61	5.8	2460	6.25	0.22	5.19	79	
ML1	9	11/7/2012	11/8/2012	0.5 GPM Step 1	9:15	195	467	193.6	1.03	12.35	1589	6.52	0.23	9.88	-18.5	
ML1	10	11/7/2012	11/8/2012	0.5 GPM Step 1	8:55	25	351	12	1.44	0.6	922	6.85	0.06	14.6	-96	
ML1	11	11/7/2012	11/8/2012	0.5 GPM Step 1	13:05	14	269	5.32	2.4	5.66	898	6.90	0.25	4.66	-71.2	
ML1	12	11/7/2012	11/8/2012	0.5 GPM Step 1	12:55	21	290	4.59	1.03	4.84	887	6.61	0.66	20.96	-23.1	
ML2	1	11/7/2012	11/13/2012	0.5 GPM Step 1	9:35	38000	11100	1845	1810	2200	72079	3.63	0.79	8.9	220.8	
ML2	2	11/7/2012	11/8/2012	0.5 GPM Step 1	12:40	4000	2790	1050	430	390	66114	3.75	1.14	3.09	223.6	
ML2	3	11/7/2012	11/8/2012	0.5 GPM Step 1	12:15	26500	10600	1730	860	1290	54737	3.91	0.91	18.6	203.4	
ML2	4	11/7/2012	11/8/2012	0.5 GPM Step 1	11:50	7000	3150	1440	1450	495	28836	4.30	0.77	2.63	165.7	
ML2	5	11/7/2012	11/8/2012	0.5 GPM Step 1	11:35	4700	655	2755	115.5	119	13754	5.07	1.25	45	113.2	
ML2	6	11/7/2012	11/8/2012	0.5 GPM Step 1	11:00	5000	555	367	13	65.5	5727	5.70	1.02	4.61	78.3	
ML2	7	11/7/2012	11/8/2012	0.5 GPM Step 1	10:40	1200	197.5	429	14.4	21.1	3361	5.84	0.7	2.19	50.1	
ML2	8	11/7/2012	11/8/2012	0.5 GPM Step 1	10:00	300	383	107	6.4	4.8	2159	5.37	0.51	3.62	128.6	
ML2	9	11/7/2012	11/8/2012	0.5 GPM Step 1	9:40	71	393	45.4	1.97	2.5	1051	5.90	0.66	4.29	65.9	
ML2	10	11/7/2012	11/13/2012	0.5 GPM Step 1	9:00	46	176	3.52	0.05	0.19	862	5.48	0.82	0.72	143.7	

Prepared by: LJ 11/04/2014
Checked by: PHT 11/04/2014

Table 3-1: Water Quality Monitoring Results for Pumping Step 1
DAPL Extraction Pilot Study
Performance Evaluation Report

Olin Wilmington Superfund Site
Wilmington, MA

Well ID	Port	Collection Date	Analysis Date	Period Description	Analysis Time	Sulfate (mg/L)	Chloride (mg/L)	Ammonia (mg/L)	Ferrous Iron (mg/L)	Total Iron (mg/L)	Conductivity (umohs/cm)	pH	Dissolved O2 (mg/L)	Turbidity (NTU)	ORP/Eh (mV)	Comments
ML2	10	11/7/2012	11/13/2012	0.5 GPM Step 1	9:15	37	291	4.46	0.08	0.06						Duplicate
ML2	11	11/7/2012	11/8/2012	0.5 GPM Step 1	8:40	35	326	14.5	1.49	1.75	842	5.70	0.85	0.76	85	
ML2	12	11/7/2012	11/8/2012	0.5 GPM Step 1	8:25	38	206	17.7	2.1	6.1	801	6.08	1.28	2.33	10.3	
EW	1	11/8/2012	11/12/2012	0.5 GPM Step 1	15:10	45000	22100	6430	2050	2260						
ML1	1	11/8/2012	11/12/2012	0.5 GPM Step 1	14:50	48000	8590	1330	1970	2970	74600	4.72	0.27	8.61	173.7	
ML1	2	11/8/2012	11/12/2012	0.5 GPM Step 1	14:30	62000	10850	2225	1890	2140	66910	4.73	0.26	4.01	185	
ML1	3	11/8/2012	11/12/2012	0.5 GPM Step 1	13:35	32000	13400	3255	1040	2050	56820	4.81	0.09	6.4	169.2	
ML1	4	11/8/2012	11/12/2012	0.5 GPM Step 1	13:15	12800	5760	1338	336	570	35700	5.04	0.2	36.01	146.4	
ML1	5	11/8/2012	11/12/2012	0.5 GPM Step 1	11:50	5400	1842	463.5	72	131.5	13790	5.87	0.05	12.7	113.4	
ML1	5	11/8/2012	11/12/2012	0.5 GPM Step 1	12:05	3800	2800	487	109	113						Duplicate
ML1	6	11/8/2012	11/12/2012	0.5 GPM Step 1	11:40	800	706	195.4	29.4	48.8	5760	6.93	0.8	3.6	12.9	
ML1	7	11/8/2012	11/12/2012	0.5 GPM Step 1	11:25	760	337	67.4	13.2	15.2	3269	6.70	0.88	3.6	49.8	
ML1	8	11/8/2012	11/12/2012	0.5 GPM Step 1	11:10	640	323	52	13.3	20.5	2500	7.03	0.21	14.9	17.8	
ML1	9	11/8/2012	11/12/2012	0.5 GPM Step 1	10:55	140	420	20.6	8.2	9	1637	7.20	0.25	4	-16.3	
ML1	10	11/8/2012	11/12/2012	0.5 GPM Step 1	10:45	20	277	1.48	7.05	13.35	943	7.56	0.49	3.66	-66	
ML1	11	11/8/2012	11/12/2012	0.5 GPM Step 1	10:35	20	328	1.04	3.1	7.65	915	7.75	0.42	6.94	-73.1	
ML1	12	11/8/2012	11/12/2012	0.5 GPM Step 1	10:15	29	284	1.27	1.29	5.88	919	7.32	0.83	24.6	-35	
ML2	1	11/8/2012	11/12/2012	0.5 GPM Step 1	10:00	24000	1710	663	920	1260	71304	3.51	0.49	4.98	214	
ML2	2	11/8/2012	11/12/2012	0.5 GPM Step 1	9:46	82000	2190	1600	1760	2640	65380	3.62	0.39	3.22	209.6	
ML2	3	11/8/2012	11/9/2012	0.5 GPM Step 1	11:25	11500	8310	4070	480	490	53765	3.74	0.34	22.1	189.4	
ML2	4	11/8/2012	11/9/2012	0.5 GPM Step 1	11:05	5000	2200	2040	18.1	255	29058	4.12	4.12	16.9	186.3	
ML2	5	11/8/2012	11/9/2012	0.5 GPM Step 1	10:00	800	2165	354.5	20.9	18	13104	4.93	0.78	20.6	118	
ML2	6	11/8/2012	11/9/2012	0.5 GPM Step 1	9:40	620	479	273	13.7	10.1	5665	5.36	0.43	2.36	951	
ML2	7	11/8/2012	11/9/2012	0.5 GPM Step 1	9:30	440	185.5	186.5	15.4	7	3316	5.74	0.54	2.91	63.6	
ML2	8	11/8/2012	11/9/2012	0.5 GPM Step 1	9:15	230	304	70.5	8.55	4.05	2205	5.36	0.68	1.91	128.1	
ML2	9	11/8/2012	11/9/2012	0.5 GPM Step 1	8:55	72	332	8.1	2.02	4.4	1051	5.84	0.91	1.92	90.2	
ML2	10	11/8/2012	11/9/2012	0.5 GPM Step 1	8:30	43	276	4.99	0.03	0.02	860	5.45	1.05	2.7	124.5	
ML2	10	11/8/2012	11/9/2012	0.5 GPM Step 1	8:40	39	287	2.66	0.04	0.1						Duplicate
ML2	11	11/8/2012	11/9/2012	0.5 GPM Step 1	8:15	40	286	7.66	2.08	2.25	841	5.66	0.96	2.9	94.4	
ML2	12	11/8/2012	11/9/2012	0.5 GPM Step 1	8:05	43	249	11.7	2.2	3.75	870	5.85	0.93	1.69	82.8	
EW	1	11/13/2012		0.5 GPM Step 1							>99,000	3.42	< 0.01	1.9	183	
ML1	1	11/13/2012	11/14/2012	0.5 GPM Step 1	14:10	59000	620	8050	4520	3600	92400	3.64	0.19	7.5	151	
ML1	2	11/13/2012	11/14/2012	0.5 GPM Step 1	13:50	51000	3710	4300	2010	1660	84700	3.66	0.05	3.4	157	
ML1	3	11/13/2012	11/14/2012	0.5 GPM Step 1	13:35	13000	2695	3075	950	670	75500	3.69	< 0.01	16.3	151	
ML1	4	11/13/2012	11/14/2012	0.5 GPM Step 1	13:25	7000	3130	1205	480	380	46600	3.92	< 0.01	25.9	133	
ML1	5	11/13/2012	11/14/2012	0.5 GPM Step 1	12:25	20000	3560	2200	170	920	74400	3.69	< 0.01	3.1	159	
ML1	5	11/13/2012	11/14/2012	0.5 GPM Step 1	12:40	18500	5350	2375	805	710						Duplicate
ML1	6	11/13/2012	11/14/2012	0.5 GPM Step 1	9:35	540	386.5	182	32	13.6	7640	5.92	< 0.01	2	-38	
ML1	7	11/13/2012	11/14/2012	0.5 GPM Step 1	9:20	1020	230.5	31.5	7.5	14.6	4280	5.68	< 0.01	4	13	
ML1	8	11/13/2012	11/14/2012	0.5 GPM Step 1	8:25	300	232	173.6	12.2	8.8	3380	5.90	0.014	11	-18	
ML1	9	11/13/2012	11/14/2012	0.5 GPM Step 1	8:10	145	371	70.7	13.9	9.7	2180	6.09	< 0.01	69	-46	
ML1	10	11/13/2012	11/14/2012	0.5 GPM Step 1	7:55	24	292	11.8	4.24	9.04	1250	6.24	< 0.01	3.1	-110	
ML1	11	11/13/2012	11/14/2012	0.5 GPM Step 1	7:40	10	302	9.09	3.02	3.76	1200	6.51	< 0.01	7.2	732	
ML1	12	11/13/2012	11/14/2012	0.5 GPM Step 1	7:20	39	267	7.74	2.51	1.86	1220	6.14	< 0.01	5.3	-83	
ML2	1	11/13/2012	11/15/2012	0.5 GPM Step 1	10:10	60000	13900	1680	2340	3200	77032	3.53	0.74	3.22	201.9	
ML2	2	11/13/2012	11/15/2012	0.5 GPM Step 1	8:05	52000	10700	4120	2530	4520	71407	3.65	0.61	0.89	191.7	
ML2	3	11/13/2012	11/15/2012	0.5 GPM Step 1	7:40	24500	11550	3430	1500	1610	58548	3.76	1.76	61.8	211.5	
ML2	4	11/13/2012	11/15/2012	0.5 GPM Step 1	7:20	18000	1342	1026	270	628	33430	4.05	1.3	16.8	1739	
ML2	5	11/13/2012	11/15/2012	0.5 GPM Step 1	7:00	2720	2005	563	29.6	72	14374	5.05	1.39	63.2	128.9	
ML2	6	11/13/2012	11/14/2012	0.5 GPM Step 1	14:45	640	341.5	348	15.9	20.8	6195	5.59	1.09	3.09	87.2	

Prepared by: LJ 11/04/2014
Checked by: PHT 11/04/2014

Table 3-1: Water Quality Monitoring Results for Pumping Step 1
DAPL Extraction Pilot Study
Performance Evaluation Report

Olin Wilmington Superfund Site
Wilmington, MA

Well ID	Port	Collection Date	Analysis Date	Period Description	Analysis Time	Sulfate (mg/L)	Chloride (mg/L)	Ammonia (mg/L)	Ferrous Iron (mg/L)	Total Iron (mg/L)	Conductivity (umohs/cm)	pH	Dissolved O2 (mg/L)	Turbidity (NTU)	ORP/Eh (mV)	Comments
ML2	7	11/13/2012	11/14/2012	0.5 GPM Step 1	14:20	320	102.5	226	14.75	20.8	3621	5.79	1.79	11.6	77.4	
ML2	8	11/13/2012	11/14/2012	0.5 GPM Step 1	16:00	85	262	97.5	2.8	1	2488	5.29	0.63	6.91	129.2	
ML2	9	11/13/2012	11/14/2012	0.5 GPM Step 1	15:30	65	245	19.5	1.9	2.9	1186	5.74	1.72	3.31	1058	
ML2	10	11/13/2012	11/14/2012	0.5 GPM Step 1	14:50	20	227	8.92	0.04	0.06	962	5.41	0.73	2.71	115.2	
ML2	10	11/13/2012	11/14/2012	0.5 GPM Step 1	15:05	39	222	10.2	0.02	0.06						Duplicate
ML2	11	11/13/2012	11/14/2012	0.5 GPM Step 1	14:40	45	179	8.26	1.97	1	939	5.59	1.32	1.98	89.6	
ML2	12	11/13/2012	11/14/2012	0.5 GPM Step 1	14:25	40	180	10.9	1.13	6.2	932	6.03	1.4	0.91	60.2	
EW	1	11/16/2012	11/21/2012	0.5 GPM Step 1	8:03	76000	18900	6660	2780	3160	> 99,000	3.57	< 0.01	0.62	184	
ML1	1	11/16/2012	11/21/2012	0.5 GPM Step 1	7:50	128000	13500	6670	2820	6360	>99,000	3.71	< 0.01	1.45	152	
ML1	2	11/16/2012	11/20/2012	0.5 GPM Step 1	13:45	32000	27500	4970	1860	2550	>99,000	3.72	< 0.01	2.01	16	
ML1	3	11/16/2012	11/20/2012	0.5 GPM Step 1	13:35	18500	16500	3095	1800	1900	84200	3.79	< 0.01	6.4	155	
ML1	4	11/16/2012	11/20/2012	0.5 GPM Step 1	13:15	9000	5280	1402	566	458	52900	4.01	< 0.01	53.6	134	
ML1	5	11/16/2012	11/20/2012	0.5 GPM Step 1	11:25	7100	735	354.5	94	113.6	21600	4.96	< 0.01	210	111	
ML1	5	11/16/2012	11/20/2012	0.5 GPM Step 1	11:50	6600	775	481	162	178						Duplicate
ML1	6	11/16/2012	11/20/2012	0.5 GPM Step 1	11:00	1140	252.5	195.5	19.6	23.2	4990	5.83	< 0.01	0.2	10	
ML1	7	11/16/2012	11/20/2012	0.5 GPM Step 1	10:45	1400	150.5	170	22.6	22.4	4900	5.81	< 0.01	1	15	
ML1	8	11/16/2012	11/16/2012	0.5 GPM Step 1	10:55	680	276	130.4	14.3	21.7	3770	6.01	< 0.01	4.6	-14	
ML1	9	11/16/2012	11/16/2012	0.5 GPM Step 1	10:40	180	430	52	14.2	16.2	2470	6.16	< 0.01	9.2	-37	
ML1	10	11/16/2012	11/16/2012	0.5 GPM Step 1	10:30	25	333	6.99	10.75	16.4	1410	6.49	< 0.01	1	-112	
ML1	11	11/16/2012	11/16/2012	0.5 GPM Step 1	10:15	25	289	5.64	1.95	9.75	1340	6.51	< 0.01	3.7	-123	
ML1	12	11/16/2012	11/16/2012	0.5 GPM Step 1	10:05	14	289	6.57	1.04	8.32	1310	6.20	< 0.01	2.1	-68	
ML2	1	11/16/2012	11/21/2012	0.5 GPM Step 1	12:40	12000	16180	7700	750	780	75299	3.31	0.91	5.06	194.7	
ML2	2	11/16/2012	11/21/2012	0.5 GPM Step 1	12:20	40000	18400	8240	1016	2336	69764	3.64	0.77	1.92	184.7	
ML2	3	11/16/2012	11/21/2012	0.5 GPM Step 1	12:00	13500	13500	6220	540	692	57439	3.76	1.18	70.2	188.7	
ML2	4	11/16/2012	11/21/2012	0.5 GPM Step 1	11:45	3400	3410	2412	283	698	32680	4.05	1.17	43	176.4	
ML2	5	11/16/2012	11/21/2012	0.5 GPM Step 1	11:00	2600	1440	265	118.8		13677	5.10	1.98	48.9	126.8	
ML2	6	11/16/2012	11/21/2012	0.5 GPM Step 1	10:40	1440	596	140	27.3	29	5954	5.53	1.99	2.91	106.9	
ML2	7	11/16/2012	11/21/2012	0.5 GPM Step 1	10:20	420	194.6	109.2	10.35	12.2	3525	5.21	2.88	3399	98.1	
ML2	8	11/16/2012	11/21/2012	0.5 GPM Step 1	10:10	94	259	68.4	3.26	2.02	2529	5.27	1.76	2.7	145.8	
ML2	9	11/16/2012	11/21/2012	0.5 GPM Step 1	9:55	74	231	18.8	2.8	2.98	1209	5.83	1.51	1.63	99.1	
ML2	10	11/16/2012	11/21/2012	0.5 GPM Step 1	9:20	41	188	4.95	0.03	0.06	955	5.31	1.79	3.06	121.5	
ML2	10	11/16/2012	11/21/2012	0.5 GPM Step 1	9:35	43	191	5.09	0.02	0.06						Duplicate
ML2	11	11/16/2012	11/21/2012	0.5 GPM Step 1	8:50	30	226	5.74	1.86	2.16	928	5.60	1.03	2.91	105.4	
ML2	12	11/16/2012	11/21/2012	0.5 GPM Step 1	8:40	43	157	8.27	2.94	5.55	903	6.04	2.15	2.92	106.9	
EW	1	11/19/2012	11/27/2012	0.5 GPM Step 1	16:25	28500	16450	4310	1185	2990	79960	3.63	0.3	0.42	192.5	
ML1	1	11/19/2012	11/27/2012	0.5 GPM Step 1	12:10	43000	18100	4950	1140	2880	68800	3.71	0.35	0.84	164.3	
ML1	2	11/19/2012	11/27/2012	0.5 GPM Step 1	11:50	55000	11900	4220	1350	1345	61870	3.72	0.32	0.95	170.1	
ML1	3	11/19/2012	11/27/2012	0.5 GPM Step 1	11:35	23500	7250	2480	260	825	50820	3.79	0.31	1.55	162.2	
ML1	4	11/19/2012	11/27/2012	0.5 GPM Step 1	11:15	6600	5620	2060	298	241	30570	4.06	0.42	2.3	144.9	
ML1	5	11/19/2012	11/27/2012	0.5 GPM Step 1	9:55	1240	1920	900	49.6	119.2	11620	5.01	0.38	49.2	116.8	
ML1	5	11/19/2012	11/27/2012	0.5 GPM Step 1	10:45	1300	2310	976	106.5	139.5						Duplicate
ML1	6	11/19/2012	11/27/2012	0.5 GPM Step 1	9:35	1120	828	383	8.4	22.2	5365	5.95	0.45	1.1	-4.4	
ML1	7	11/19/2012	11/27/2012	0.5 GPM Step 1	9:20	510	374	205.5	20	19.4	3157	5.77	0.52	0.87	22.4	
ML1	8	11/19/2012	11/27/2012	0.5 GPM Step 1	8:55	550	260	155.8	17.2	20.5	2500	5.95	0.69	0.63	-0.7	
ML1	9	11/19/2012	11/27/2012	0.5 GPM Step 1	8:45	142	292	69.3	10.1	12.4	1670	6.17	0.73	1.65	-21.5	
ML1	10	11/19/2012	11/27/2012	0.5 GPM Step 1	8:30	26	255	9.6	5.82	8.4	962	6.50	0.67	0.43	63.7	
ML1	11	11/19/2012	11/27/2012	0.5 GPM Step 1	8:15	22	310	7.8	3.76	5.76	928	6.56	0.44	0.35	-102.1	
ML1	12	11/19/2012	11/27/2012	0.5 GPM Step 1	8:00	41	214	9.5	2.81	4.34	960	6.22	1.03	3.12	-71.1	
ML2	1	11/19/2012	11/27/2012	0.5 GPM Step 1	20:50	46000	4100	5300	1190	1490	59318	3.52	1.05	18.7	188.3	
ML2	2	11/19/2012	11/27/2012	0.5 GPM Step 1	20:35	51000	4400	6100	1330	1530	54960	3.65	1.09	13.9	174	

Prepared by: LJ 11/04/2014
Checked by: PHT 11/04/2014

Table 3-1: Water Quality Monitoring Results for Pumping Step 1
DAPL Extraction Pilot Study
Performance Evaluation Report

Olin Wilmington Superfund Site
Wilmington, MA

Well ID	Port	Collection Date	Analysis Date	Period Description	Analysis Time	Sulfate (mg/L)	Chloride (mg/L)	Ammonia (mg/L)	Ferrous Iron (mg/L)	Total Iron (mg/L)	Conductivity (umohs/cm)	pH	Dissolved O2 (mg/L)	Turbidity (NTU)	ORP/Eh (mV)	Comments
ML2	3	11/19/2012	11/27/2012	0.5 GPM Step 1	20:20	32000	10250	3505	1000	1670	44924	3.77	1.43	264	171.1	
ML2	4	11/19/2012	11/27/2012	0.5 GPM Step 1	20:10	10000	1885	1430	261	800	24984	4.13	0.81	4.82	150.6	
ML2	5	11/19/2012	11/27/2012	0.5 GPM Step 1	19:40	2550	1860	838	26.4	146.5	10550	5.16	1.68	51.7	92.6	
ML2	6	11/19/2012	11/27/2012	0.5 GPM Step 1	19:15	1650	550	300.5	22.3	15.6	4654	5.58	1.26	1.72	65.3	
ML2	7	11/19/2012	11/27/2012	0.5 GPM Step 1	18:55	1088	258	184.2	12.4	7.8	2774	5.73	0.55	2.09	54.7	
ML2	8	11/19/2012	11/27/2012	0.5 GPM Step 1	18:40	230	333	56.3	1.45	5.05	1971	5.33	0.76	1.66	105.4	
ML2	9	11/19/2012	11/27/2012	0.5 GPM Step 1	18:30	155	293	17.6	9.75	10.65	974	5.84	1.45	16.4	86.1	
ML2	10	11/19/2012	11/27/2012	0.5 GPM Step 1	18:00	45	309	10.2	0.04	0.07	763	5.37	1.75	1.25	99.1	
ML2	10	11/19/2012	11/27/2012	0.5 GPM Step 1	18:15	47	290	9.35	0.04	0.04						Duplicate
ML2	11	11/19/2012	11/27/2012	0.5 GPM Step 1	17:40	15	271	9.75	1	0.55	739	5.62	1.09	2.01	95.6	
ML2	12	11/19/2012	11/27/2012	0.5 GPM Step 1	17:30	47	282	13.3	2.1	3.95	937	5.60	1.93	2	133.4	
MP2	3	11/19/2012	11/27/2012	0.5 GPM Step 1	16:05	19600	7540	2060	410	584	52370	3.67	0.18	0.71	197	
MP2	4	11/19/2012	11/27/2012	0.5 GPM Step 1	15:50	7600	2410	1000	194	318	28730	3.82	0.2	0.8	178.3	
MP2	6	11/19/2012	11/27/2012	0.5 GPM Step 1	15:15	1220	671	266	12.2	20.8	5462	4.47	0.2	0.23	127.3	
MP2	6	11/19/2012	11/27/2012	0.5 GPM Step 1	15:25	1280	278	177	18.2	26.2						Duplicate
MP2	7	11/19/2012	11/27/2012	0.5 GPM Step 1	14:55	840	570	225.5	16	18.2	4693	4.69	0.27	0.38	119.7	
MP2	10	11/19/2012	11/27/2012	0.5 GPM Step 1	14:45	710	5954	185	16	19.5	4070	4.81	0.7	1.96	94.3	
MP2	11	11/19/2012	11/27/2012	0.5 GPM Step 1	14:35	380	306	98.3	5.28	5.78	2064	4.95	0.23	0.4	35.5	
MP2	12	11/19/2012	11/27/2012	0.5 GPM Step 1	14:20	30	234	0.8	1.34	1.36	732	4.81	0.4	0.71	1.5	
MP2	13	11/19/2012	11/27/2012	0.5 GPM Step 1	14:10	3	156	0.83	1.04	1.38	575	5.38	0.35	1.32	-52.5	
ML1	10	11/26/2012	11/28/2012	0.5 GPM Step 1	8:55	46	335	11	13	14.55	1260	6.50	< 0.01	0.52	-115	
ML1	11	11/26/2012	11/28/2012	0.5 GPM Step 1	8:40	32	318	8.58	5.12	10.52	1119	6.47	< 0.01	0.93	-124	
ML1	12	11/26/2012	11/28/2012	0.5 GPM Step 1	8:30	48	265	9.76	1.85	1.81	1160	6.08	< 0.01	2.27	-64	
EW	1	11/27/2012	11/28/2012	0.5 GPM Step 1	13:05	80000	16500	7170	1800	3120	>99,000	3.52	2.17	1.24	184	
ML1	1	11/27/2012	11/28/2012	0.5 GPM Step 1	12:45	61000	2430	1670	1380	1850	>99,000	3.64	< 0.01	3.8	153	
ML1	2	11/27/2012	11/28/2012	0.5 GPM Step 1	12:35	34000	3970	2420	970	1260	80800	3.76	< 0.01	49	155	
ML1	3	11/27/2012	11/28/2012	0.5 GPM Step 1	12:20	64000	13600	4720	1025	1720	93900	3.68	< 0.01	3.31	159	
ML1	4	11/27/2012	11/28/2012	0.5 GPM Step 1	11:20	20800	7590	5640	464	498	48200	3.98	< 0.01	17.9	129	
ML1	5	11/27/2012	11/28/2012	0.5 GPM Step 1	10:35	6900	2400	1895	85	182	20200	4.95	< 0.01	80.9	97	
ML1	5	11/27/2012	11/28/2012	0.5 GPM Step 1	10:55	5800	2740	2285	156	161						Duplicate
ML1	6	11/27/2012	11/28/2012	0.5 GPM Step 1	10:05	2040	545	604	45.2	57.4	8200	5.92	< 0.01	0.63	-30	
ML1	7	11/27/2012	11/28/2012	0.5 GPM Step 1	9:50	1020	233	295	19.4	20.2	4650	5.68	< 0.01	2.08	12	
ML1	8	11/27/2012	11/28/2012	0.5 GPM Step 1	9:35	500	245.5	217	21.2	24.4	3580	5.87	< 0.01	1.82	-10	
ML1	9	11/27/2012	11/28/2012	0.5 GPM Step 1	9:20	270	418	95.6	15.8	17.4	2290	5.80	< 0.01	1.52	-17	
ML2	1	11/27/2012	11/29/2012	0.5 GPM Step 1	9:20	50000	21000	3770	2050	2550	>99,000	3.56	0.18	12.77	193	
ML2	2	11/27/2012	11/29/2012	0.5 GPM Step 1	8:50	34000	17300	3650	1870	2390	99300	3.71	< 0.01	9.47	179	
ML2	3	11/27/2012	11/29/2012	0.5 GPM Step 1	8:15	18000	7550	1975	1032	1052	81800	3.80	0.11	> 800	101	
ML2	4	11/27/2012	11/29/2012	0.5 GPM Step 1	8:00	10000	6550	1660	294	290	47200	4.08	0.48	34.9	150	
ML2	5	11/27/2012	11/29/2012	0.5 GPM Step 1	7:45	4700	690	332	65	107	20400	5.40	< 0.01	64.9	21	
ML2	6	11/27/2012	11/29/2012	0.5 GPM Step 1	7:25	3300	311	230	35	35	8390	5.69	< 0.01	13.3	-1	
ML2	8	11/27/2012	11/28/2012	0.5 GPM Step 1	14:45	40	328	79.6	5.84	3.65	3430	5.39	< 0.01	3.24	63	
ML2	9	11/27/2012	11/28/2012	0.5 GPM Step 1	14:30	62	350	11.9	2.16	2.41	1710	5.65	< 0.01	130	49	
ML2	10	11/27/2012	11/28/2012	0.5 GPM Step 1	13:50	43	289	4.85	0.05	0.07	1330	5.45	< 0.01	3.09	96	
ML2	10	11/27/2012	11/28/2012	0.5 GPM Step 1	14:10	48	277	5.13	0.8	0.04						Duplicate
ML2	11	11/27/2012	11/28/2012	0.5 GPM Step 1	13:35	27	299	4.82	2.16	1.35	1410	5.65	< 0.01	12.8	43	
ML2	12	11/27/2012	11/28/2012	0.5 GPM Step 1	13:20	43	260	6.3	1.78	6.5	1680	5.86	< 0.01	22.7	75	
ML2	1	1/7/2013	1/8/2013	0.5 GPM Step 1	14:25	98000	17150	14500	3980	5780	>99,000	3.73	1.51	2.32	206	
ML2	2	1/7/2013	1/8/2013	0.5 GPM Step 1	14:10	84000	15180	10800	2470	5920	95800	4.02	0.55	3.98	179	
ML2	3	1/7/2013	1/8/2013	0.5 GPM Step 1	13:55	33500	9660	22150	1200	1380	75800	3.99	0.77	194	184	
ML2	4	1/7/2013	1/8/2013	0.5 GPM Step 1	13:30	10000	4825	3590	117	594	41300	4.33	1.59	103	173	

Prepared by: LJ 11/04/2014
Checked by: PHT 11/04/2014

Table 3-1: Water Quality Monitoring Results for Pumping Step 1
DAPL Extraction Pilot Study
Performance Evaluation Report

Olin Wilmington Superfund Site
Wilmington, MA

Well ID	Port	Collection Date	Analysis Date	Period Description	Analysis Time	Sulfate (mg/L)	Chloride (mg/L)	Ammonia (mg/L)	Ferrous Iron (mg/L)	Total Iron (mg/L)	Conductivity (umohs/cm)	pH	Dissolved O2 (mg/L)	Turbidity (NTU)	ORP/Eh (mV)	Comments
ML2	5	1/7/2013	1/8/2013	0.5 GPM Step 1	13:10	2680	488	774	44	82.4	17800	5.94	0.11	35.9	-32	
ML2	6	1/7/2013	1/8/2013	0.5 GPM Step 1	12:55	690	509	400	12.1	35.4	7200	5.93	< 0.01	13.7	-25	
ML2	7	1/7/2013	1/8/2013	0.5 GPM Step 1	12:40	110	256	213	7.7	21.9	4580	6.00	0.2	9.18	-46	
ML2	8	1/7/2013	1/8/2013	0.5 GPM Step 1	12:30	42	239	183	2.12	8.65	3350	5.44	< 0.01	2.65	47	
ML2	9	1/7/2013	1/8/2013	0.5 GPM Step 1	12:15	48	286	19	2.25	1.8	1400	5.56	1.21	13	37	
ML2	10	1/7/2013	1/8/2013	0.5 GPM Step 1	11:55	46	238	9.8	0.3	0.03	1130	5.39	< 0.01	18.7	101	
ML2	10	1/7/2013	1/8/2013	0.5 GPM Step 1	12:05	32	229	9.18	0.05	0.04						Duplicate
ML2	11	1/7/2013	1/8/2013	0.5 GPM Step 1	11:40	46	212	9.16	0.92	1.4	1050	5.60	< 0.01	11.2	35	
ML2	12	1/7/2013	1/8/2013	0.5 GPM Step 1	11:25	18	254	13.3	2.3	4.8	1180	5.80	< 0.01	3.2	-65	
ML1	1	1/8/2013	1/9/2013	0.5 GPM Step 1	13:45	28000	17400	3180	800	1260	>99,000	3.77	< 0.01	1.73	164	
ML1	2	1/8/2013	1/9/2013	0.5 GPM Step 1	13:35	96000	21700	6900	2200	5820	91000	3.85	< 0.01	1.01	159	
ML1	3	1/8/2013	1/9/2013	0.5 GPM Step 1	13:15	20400	7140	5890	864	2272	74600	3.94	< 0.01	9.88	160	
ML1	4	1/8/2013	1/9/2013	0.5 GPM Step 1	12:45	4400	5160	1220	159	328	43200	4.23	< 0.01	15.5	165	
ML1	5	1/8/2013	1/9/2013	0.5 GPM Step 1	11:35	700	2650	222	18.2	43.4	17600	5.11	< 0.01	40.9	96	
ML1	5	1/8/2013	1/9/2013	0.5 GPM Step 1	11:55	840	2935	188	19	42						Duplicate
ML1	6	1/8/2013	1/9/2013	0.5 GPM Step 1	11:20	200	1025	76.5	9.7	12.8	2160	6.18	< 0.01	5.68	-38	
ML1	7	1/8/2013	1/9/2013	0.5 GPM Step 1	10:50	690	636	110	14.3	17.9	4570	5.83	< 0.01	1.29	5	
ML1	8	1/8/2013	1/9/2013	0.5 GPM Step 1	10:35	390	594	180	10.1	21	3550	6.01	< 0.01	4.94	-12	
ML1	9	1/8/2013	1/9/2013	0.5 GPM Step 1	10:25	74	677	76.8	5	9	2140	6.11	< 0.01	12.5	-23	
ML1	10	1/8/2013	1/9/2013	0.5 GPM Step 1	10:10	18	492	8.08	8.5	10.9	1230	6.57	< 0.01	2.53	-117	
ML1	11	1/8/2013	1/9/2013	0.5 GPM Step 1	10:00	11	451	6.48	4.15	6.6	1200	6.69	< 0.01	15	-133	
ML1	12	1/8/2013	1/9/2013	0.5 GPM Step 1	9:50	13	14340	6.14	3.78	4.32	1090	6.18	< 0.01	6.01	-45	
MP2	3	1/9/2013	1/10/2013	0.5 GPM Step 1	13:20	32000	12050	4020	785	1030	81000	3.59	< 0.01	1.12	190	
MP2	4	1/9/2013	1/10/2013	0.5 GPM Step 1	13:05	28500	5300	2248	855	1460	44800	3.74	< 0.01	0.67	172	
MP2	6	1/9/2013	1/10/2013	0.5 GPM Step 1	11:20	2080	1160	134	29.6	37.2	9690	4.38	< 0.01	0.39	158	
MP2	6	1/9/2013	1/10/2013	0.5 GPM Step 1	11:30	1800	782	814	32.2	36.6						Duplicate
MP2	7	1/9/2013	1/10/2013	0.5 GPM Step 1	9:50	1260	750	477	25.6	32.4	8450	4.74	< 0.01	1.15	123	
MP2	10	1/9/2013	1/10/2013	0.5 GPM Step 1	9:30	500	845	340	25	27.6	7630	4.74	< 0.01	23.1	122	
MP2	11	1/9/2013	1/10/2013	0.5 GPM Step 1	9:00	430	348	158	3.58	8.4	3440	4.96	< 0.01	2.19	74	
MP2	12	1/9/2013	1/10/2013	0.5 GPM Step 1	8:35	26	149	0.76	1.51	1.53	694	4.78	< 0.01	0.73	76	
MP2	13	1/9/2013	1/10/2013	0.5 GPM Step 1	8:25	4	198	1.66	1.1	1.32	870	5.47	< 0.01	5.92	-1	
EW	1	1/28/2013	1/29/2013	0.5 GPM Step 1	15:20	54000	17300	8000	1000	2480	>99,000	3.60	< 0.01	0.97	180	
ML2	1	1/28/2013	1/29/2013	0.5 GPM Step 1	15:00	40000	21300	8150	1040	2040	97600	3.60	< 0.01	3.94	183	
ML2	2	1/28/2013	1/29/2013	0.5 GPM Step 1	14:45	71000	12200	17800	3010	6060	93200	3.90	0.13	10	178	
ML2	3	1/28/2013	1/29/2013	0.5 GPM Step 1	13:45	48000	3895	4560	1055	970	73700	3.90	< 0.01	293	172	
ML2	4	1/28/2013	1/29/2013	0.5 GPM Step 1	13:20	12600	2490	1572	342	546	38600	4.30	0.16	57.4	149	
ML2	5	1/28/2013	1/29/2013	0.5 GPM Step 1	12:50	3350	1180	910	56	92	16300	5.80	< 0.01	25.9	-14	
ML2	6	1/28/2013	1/29/2013	0.5 GPM Step 1	12:30	1300	458	336	23.9	17.9	6830	5.80	< 0.01	11.5	1	
ML2	7	1/28/2013	1/29/2013	0.5 GPM Step 1	12:20	700	326	210	13.6	18.2	4450	5.80	< 0.01	2.3	-1	
ML2	8	1/28/2013	1/29/2013	0.5 GPM Step 1	12:05	490	193	165.6	2.4	3.4	3340	5.30	< 0.01	3.72	91	
ML2	9	1/28/2013	1/29/2013	0.5 GPM Step 1	11:50	49	221	19.3	2.18	2.51	1240	5.50	< 0.01	8.97	90	
ML2	10	1/28/2013	1/29/2013	0.5 GPM Step 1	11:30	38	220	11.3	0.03	0.02	1120	5.20	< 0.01	0.37	159	
ML2	10	1/28/2013	1/29/2013	0.5 GPM Step 1	11:40	37	225	11.8	0.03	0.05						Duplicate
ML2	11	1/28/2013	1/29/2013	0.5 GPM Step 1	11:15	31	185	8.55	0.69	1.15	1070	5.40	< 0.01	0.48	90	
ML2	12	1/28/2013	1/29/2013	0.5 GPM Step 1	10:35	48	195	11.4	4.95	6.6	943	5.90	< 0.01	1.62	-10	
ML1	1	1/29/2013	1/30/2013	0.5 GPM Step 1	14:20	54000	10900	2220	424	2620	98500	3.70	< 0.01	2.43	161	
ML1	2	1/29/2013	1/30/2013	0.5 GPM Step 1	14:00	98000	9900	6840	274	4180	90600	3.80	< 0.01	2.64	153	
ML1	3	1/29/2013	1/30/2013	0.5 GPM Step 1	13:40	94000	5300	6450	472	4120	74000	3.80	< 0.01	22.3	156	
ML1	4	1/29/2013	1/30/2013	0.5 GPM Step 1	13:00	12400	4200	2040	181	534	40700	4.20	< 0.01	9.48	123	
ML1	5	1/29/2013	1/30/2013	0.5 GPM Step 1	12:20	1340	655	366	18.2	31.4	15800	5.00	< 0.01	30.8	83	

Prepared by: LJ 11/04/2014
Checked by: PHT 11/04/2014

Table 3-1: Water Quality Monitoring Results for Pumping Step 1
DAPL Extraction Pilot Study
Performance Evaluation Report

Olin Wilmington Superfund Site
Wilmington, MA

Well ID	Port	Collection Date	Analysis Date	Period Description	Analysis Time	Sulfate (mg/L)	Chloride (mg/L)	Ammonia (mg/L)	Ferrous Iron (mg/L)	Total Iron (mg/L)	Conductivity (umohs/cm)	pH	Dissolved O2 (mg/L)	Turbidity (NTU)	ORP/Eh (mV)	Comments
ML1	5	1/29/2013	1/30/2013	0.5 GPM Step 1	12:35	1380	690	405	19.1	34.6						Duplicate
ML1	6	1/29/2013	1/30/2013	0.5 GPM Step 1	11:55	1180	435	264	25.2	40.6	6640	6.00	< 0.01	30.7	-51	
ML1	7	1/29/2013	1/30/2013	0.5 GPM Step 1	11:30	960	313	189	10.3	17.6	4380	5.70	< 0.01	1.5	-3	
ML1	8	1/29/2013	1/30/2013	0.5 GPM Step 1	11:15	700	184	160.5	14.7	20.1	3420	5.70	< 0.01	6.17	-15	
ML1	9	1/29/2013	1/30/2013	0.5 GPM Step 1	11:00	120	282	50.5	8.35	11.4	1730	5.90	< 0.01	8.62	-33	
ML1	10	1/29/2013	1/30/2013	0.5 GPM Step 1	10:50	25	191	7.6	6.35	10.3	1150	6.30	< 0.01	0.62	-120	
ML1	11	1/29/2013	1/30/2013	0.5 GPM Step 1	10:30	35	188	6.37	4.3	6.7	1120	6.40	< 0.01	1.3	-137	
ML1	12	1/29/2013	1/30/2013	0.5 GPM Step 1	10:20	42	188	6.39	2.57	7.84	951	5.80	< 0.01	9.51	-26	
MP2	3	1/30/2013	1/31/2013	0.5 GPM Step 1	11:30	90000	9480	1742	350	3320	70000	3.70	< 0.01	1.15	191	
MP2	4	1/30/2013	1/31/2013	0.5 GPM Step 1	11:00	12600	4910	899	157	510	38100	3.90	< 0.01	1.15	175	
MP2	6	1/30/2013	1/31/2013	0.5 GPM Step 1	9:50	2360	975	240	28.4	37.6						Duplicate
MP2	6	1/30/2013	1/31/2013	0.5 GPM Step 1	10:10	2200	1000	234	29.2	35.6	8420	4.50	< 0.01	0.59	183	
MP2	7	1/30/2013	1/31/2013	0.5 GPM Step 1	9:25	1760	850	268	25	31.2	7230	4.90	< 0.01	2.5	138	
MP2	10	1/30/2013	1/31/2013	0.5 GPM Step 1	9:05	1680	910	291	14.2	27.6	6740	4.80	< 0.01	42.7	158	
MP2	11	1/30/2013	1/31/2013	0.5 GPM Step 1	7:55	380	397	90.2	9.9	10.3	3190	5.00	< 0.01	8.38	58	
MP2	13	1/30/2013	1/31/2013	0.5 GPM Step 1	7:30	15	113	0.68	0.68	0.83	439	5.10	< 0.01	119	-1	
EW	1	2/12/2013	2/14/2013	0.5 GPM Step 1	12:40	72000	34400	8080	2560	3180	> 99,900	3.70	< 0.01	1.12	175	
ML2	1	2/12/2013	2/14/2013	0.5 GPM Step 1	12:20	88000	21300	5560	3120	7320	86500	3.80	< 0.01	3.16	176	
ML2	2	2/12/2013	2/14/2013	0.5 GPM Step 1	12:05	28000	16900	5310	1340	1580	81300	4.00	< 0.01	1.76	164	
ML2	3	2/12/2013	2/14/2013	0.5 GPM Step 1	11:40	58000	11650	3765	730	4380	65000	4.00	< 0.01	35.1	160	
ML2	4	2/12/2013	2/14/2013	0.5 GPM Step 1	10:35	11000	2950	1645	188	342	32100	4.60	< 0.01	4.74	87	
ML2	5	2/12/2013	2/14/2013	0.5 GPM Step 1	10:10	2900	1335	570	76	87	13800	6.00	< 0.01	15.1	-51	
ML2	6	2/12/2013	2/14/2013	0.5 GPM Step 1	9:50	1550	378	107	28.1	37.4	5860	5.90	< 0.01	0.9	-32	
ML2	7	2/12/2013	2/14/2013	0.5 GPM Step 1	9:35	960	342	171.5	7.6	5.75	4000	6.00	< 0.01	2.13	-47	
ML2	8	2/12/2013	2/14/2013	0.5 GPM Step 1	9:15	550	259	91.2	2.88	6.6	2720	5.40	< 0.01	3.33	49	
ML2	9	2/12/2013	2/14/2013	0.5 GPM Step 1	8:55	41	302	11.8	1.57	2.03	965	5.40	< 0.01	6.55	60	
ML2	10	2/12/2013	2/14/2013	0.5 GPM Step 1	8:25	37	181	10	0.01	0.12	947	5.30	< 0.01	0.2	118	
ML2	10	2/12/2013	2/14/2013	0.5 GPM Step 1	8:40	33	172	10.4	0.07	0.11	0					Duplicate
ML2	11	2/12/2013	2/14/2013	0.5 GPM Step 1	8:15	38	240	7.84	0.76	0.65	894	5.40	< 0.01	0.72	48	
ML2	12	2/12/2013	2/14/2013	0.5 GPM Step 1	8:05	46	263	9.87	1.51	6.3	975	5.90	< 0.01	1.62	-53	
ML1	1	2/13/2013	2/15/2013	0.5 GPM Step 1	9:20	47000	17200	4360	1410	1860	83400	3.80	< 0.01	1.11	148	
ML1	2	2/13/2013	2/15/2013	0.5 GPM Step 1	9:00	34000	14500	2230	1270	1860	77100	3.80	< 0.01	2.95	148	
ML1	3	2/13/2013	2/15/2013	0.5 GPM Step 1	8:45	92000	7600	1665	595	4640	62000	3.90	< 0.01	235	148	
ML1	4	2/13/2013	2/15/2013	0.5 GPM Step 1	8:30	9000	4220	1112	300	368	34200	4.20	< 0.01	23.5	96	
ML1	5	2/13/2013	2/15/2013	0.5 GPM Step 1	8:05	3100	1135	655	90.5	99.5	13200	5.10	< 0.01	7.39	70	
ML1	5	2/13/2013	2/15/2013	0.5 GPM Step 1	8:20	3300	1190	713	88.5	94.5	0					Duplicate
ML1	6	2/13/2013	2/15/2013	0.5 GPM Step 1	7:50	2800	530	297	33.4	40.8	5340	6.00	< 0.01	4.32	-66	
ML1	7	2/13/2013	2/14/2013	0.5 GPM Step 1	13:55	820	336	188	13.8	17.2	3670	5.70	< 0.01	1.83	-18	
ML1	8	2/13/2013	2/14/2013	0.5 GPM Step 1	13:40	390	303	106	14.5	21.6	2890	5.80	< 0.01	11.7	-33	
ML1	9	2/13/2013	2/14/2013	0.5 GPM Step 1	13:30	100	377	34.3	7.4	10.5	1340	5.80	< 0.01	33.8	-37	
ML1	10	2/13/2013	2/14/2013	0.5 GPM Step 1	13:15	30	347	5.87	2.68	10.7	1080	6.30	< 0.01	1.67	-142	
ML1	11	2/13/2013	2/14/2013	0.5 GPM Step 1	13:05	38	247	4.74	1.4	7.7	946	6.40	< 0.01	1.58	-161	
ML1	12	2/13/2013	2/14/2013	0.5 GPM Step 1	12:55	19	264	5.11	1.45	5.64	862	6.00	< 0.01	3.04	-90	

Notes:
mg/L = micrograms per Liter
umohs/cm = microOhms per centimeter
NTU = nephelometric
mV = miliVolts
Blank cells indicate data collection not required.

Prepared by: LJ 11/04/2014
Checked by: PHT 11/04/2014

Table 3-2: Water Quality Monitoring Results for Pumping Step 2
DAPL Extraction Pilot Study
Performance Evaluation Report

Olin Wilmington Superfund Site
Wilmington, MA

Well ID	Port	Collection Date	Analysis Date	Period Description	Analysis Time	Sulfate (mg/L)	Chloride (mg/L)	Ammonia (mg/L)	Ferrous Iron (mg/L)	Total Iron (mg/L)	Conductivity (umohs/cm)	pH	Dissolved O2 (mg/L)	Turbidity (NTU)	ORP/Eh (mV)	Comments
EW	1	3/5/2013	3/11/2013	1.0 GPM Step 2	12:35	98000	25600	20400	4400	6440	84460	3.90	0.25	1.51	164	
ML1	3	3/5/2013	3/11/2013	1.0 GPM Step 2	12:10	21500	9410	9580	845	1390	53462	4.10	0.28	4.03	111	
ML1	4	3/5/2013	3/11/2013	1.0 GPM Step 2	11:55	29000	3100	2500	1060	1405	27982	4.40	0.42	2	41	
ML1	5	3/5/2013	3/11/2013	1.0 GPM Step 2	11:25	920	915	855	58.6	68	10239	5.20	0.87	0.96	-64	
ML1	5	3/5/2013	3/11/2013	1.0 GPM Step 2	11:40	2600	1020	1280	73	77.5						Duplicate
ML1	6	3/5/2013	3/11/2013	1.0 GPM Step 2	11:15	900	359.5	269	22	30	4454	6.00	4.3	2.31	-44	
ML2	3	3/5/2013	3/11/2013	1.0 GPM Step 2	14:00	26000	8000	7610	935	1210	54059	4.10	0.45	26.3	130	
ML2	4	3/5/2013	3/11/2013	1.0 GPM Step 2	13:30	8400	2880	2472	114	244	24718	4.70	0.45	1.29	30	
ML2	5	3/5/2013	3/11/2013	1.0 GPM Step 2	13:10	3800	940	690	26	72	10803	6.00	0.33	2.76	-83	
ML2	6	3/5/2013	3/11/2013	1.0 GPM Step 2	12:55	4200	369	345.5	43	57	4632	5.80	0.5	0.87	-68	
EW	1	3/7/2013	3/12/2013	1.0 GPM Step 2	10:30	56000	31400	13200	2220	2260	88200	3.80	< 0.01	0.74	177	
ML1	3	3/7/2013	3/12/2013	1.0 GPM Step 2	9:15	29000	5950	7960	1050	1780	55900	4.00	0.02	98.1	149	
ML1	4	3/7/2013	3/12/2013	1.0 GPM Step 2	7:30	13800	3220	1778	372	502	28200	4.30	0.21	2.71	86	
ML1	5	3/7/2013	3/12/2013	1.0 GPM Step 2	8:55	2900	1000	1090	29	38.5	10700	5.00	0.23	22.2	94	
ML1	6	3/7/2013	3/12/2013	1.0 GPM Step 2	7:15	10	441	33.1	2.9	3.5	1350	5.20	0.4	6.96	26	
ML2	5	3/7/2013	3/12/2013	1.0 GPM Step 2	10:10	2600	1184	2040	30	56	11600	5.60	0.27	18.3	-49	
ML2	6	3/7/2013	3/12/2013	1.0 GPM Step 2	9:45		407	47.2	1.1	2.3	1300	5.00	0.01	785	79	
ML2	3	3/8/2013	3/12/2013	1.0 GPM Step 2	11:20	65000	9910	6350	1235	4100	64800	4.00	0.08	83	159	
ML2	4	3/8/2013	3/12/2013	1.0 GPM Step 2	10:55	10400	4240	3685	250	312	26500	4.50	< 0.01	16.2	79	
EW	1	3/22/2013	3/26/2013	1.0 GPM Step 2	11:50	94000	25600	15900	1880	3000	73530	3.62	1.52	7.35	203.5	
ML1	3	3/22/2013	3/26/2013	1.0 GPM Step 2	12:55	62000	5930	6520	855	3620	44484	3.86	0.83	55.6	180.6	
ML1	4	3/22/2013	3/26/2013	1.0 GPM Step 2	12:40	11200	2070	4340	396	476	21830	4.29	1.34	9.22	191.1	
ML1	5	3/22/2013	3/26/2013	1.0 GPM Step 2	12:15	2250	940	1170	56.5	67.5	12850	4.50	1.03	16.9	173.1	
ML1	5	3/22/2013	3/26/2013	1.0 GPM Step 2	12:25	2850	805	890	54.5	69.5	12850	4.50	1.03	16.9	173.1	Duplicate
ML1	6	3/22/2013	3/26/2013	1.0 GPM Step 2	12:05	760	404	380.5	16.8	21.2	9048	4.77	0.95	43.3	103.5	
ML2	3	3/22/2013	3/26/2013	1.0 GPM Step 2	11:30	116000	7150	4860	2280	3840	45551	3.93	1.36	174	206.8	
ML2	4	3/22/2013	3/26/2013	1.0 GPM Step 2	11:15	8600	1590	1110	137	262	19405	4.53	0.67	13.3	127.4	
ML2	5	3/22/2013	3/26/2013	1.0 GPM Step 2	11:00	2800	680	581	49	68.5	10285	5.14	1.04	78.3	40	
ML2	6	3/22/2013	3/26/2013	1.0 GPM Step 2	10:45	1100	283.6	244	6	11	4024	5.38	2.41	8.38	90.2	
ML1	3	3/27/2013		1.0 GPM Step 2							60000	3.89	< 0.01	25.4	150	
ML1	4	3/27/2013		1.0 GPM Step 2							28500	4.24	< 0.01	2.05	120	
ML1	5	3/27/2013		1.0 GPM Step 2							11000	4.91	< 0.01	0.83	101	
ML1	6	3/27/2013		1.0 GPM Step 2							4320	5.63	< 0.01	0.57	-8	
ML2	3	3/27/2013		1.0 GPM Step 2							62200	3.92	< 0.01	35.8	159	
ML2	4	3/27/2013		1.0 GPM Step 2							26300	4.43	< 0.01	105	91	
ML2	5	3/27/2013		1.0 GPM Step 2							11300	5.55	< 0.01	10.7	-12	
ML2	6	3/27/2013		1.0 GPM Step 2							5210	5.51	< 0.01	11.4	8	
EW	1	4/24/2013		1.0 GPM Step 2							99500	3.73	0.07	1.84	173	
ML1	3	4/24/2013		1.0 GPM Step 2							57200	3.94	< 0.01	39.2	151	
ML1	4	4/24/2013		1.0 GPM Step 2							27000	4.32	< 0.01	3.01	124	
ML1	5	4/24/2013		1.0 GPM Step 2							9540	4.88	< 0.01	15.3	53	
ML1	6	4/24/2013		1.0 GPM Step 2							4070	5.62	< 0.01	0.69	-48	
ML2	3	4/24/2013		1.0 GPM Step 2							58700	3.92	< 0.01	279	167	
ML2	4	4/24/2013		1.0 GPM Step 2							25200	4.40	< 0.01	29.9	99	
ML2	5	4/24/2013		1.0 GPM Step 2							10500	5.69	< 0.01	5.7	-44	
ML2	6	4/24/2013		1.0 GPM Step 2							4560	5.49	0.01	8.8	-6	
EW	1	5/16/2013		1.0 GPM Step 2							80869	3.65	0.23	0.62	186.2	
ML1	3	5/16/2013		1.0 GPM Step 2							43729	3.88	0.25	2.81	149.6	
ML1	4	5/16/2013		1.0 GPM Step 2							19233	4.48	0.37	1.51	120.3	
ML1	5	5/16/2013		1.0 GPM Step 2							7496	5.15	0.3	1.62	44.2	

Prepared by: LJ 11/04/2014
Checked by: PHT 11/04/2014

Table 3-2: Water Quality Monitoring Results for Pumping Step 2
DAPL Extraction Pilot Study
Performance Evaluation Report

Olin Wilmington Superfund Site
Wilmington, MA

Well ID	Port	Collection Date	Analysis Date	Period Description	Analysis Time	Sulfate (mg/L)	Chloride (mg/L)	Ammonia (mg/L)	Ferrous Iron (mg/L)	Total Iron (mg/L)	Conductivity (umohs/cm)	pH	Dissolved O2 (mg/L)	Turbidity (NTU)	ORP/Eh (mV)	Comments
ML1	6	5/16/2013		1.0 GPM Step 2							3449	5.83	0.43	1.62	-24.5	
ML2	3	5/16/2013		1.0 GPM Step 2							43806	3.92	0.41	10.9	184.7	
ML2	4	5/16/2013		1.0 GPM Step 2							16791	4.87	1.43	71.3	96.7	
ML2	5	5/16/2013		1.0 GPM Step 2							7337	5.86	0.65	4.02	-3.7	
ML2	6	5/16/2013		1.0 GPM Step 2							3285	5.81	1.14	2.81	-0.3	
MP2	3	5/16/2013		1.0 GPM Step 2							47883	3.66	0.17	2.09	213.7	
MP2	4	5/16/2013		1.0 GPM Step 2							29512	3.85	0.17	4.94	189.8	
MP2	6	5/16/2013		1.0 GPM Step 2							5438	4.54	0.32	0.81	158.9	
MP2	7	5/16/2013		1.0 GPM Step 2							5371	5.00	0.25	0.72	125.9	
EW	1	6/6/2013		1.0 GPM Step 2							87500	3.77	< 0.01	1.05	169	
ML1	3	6/6/2013		1.0 GPM Step 2							43500	4.02	< 0.01	1.57	121	
ML1	4	6/6/2013		1.0 GPM Step 2							19000	4.60	< 0.01	0.98	83	
ML1	5	6/6/2013		1.0 GPM Step 2							7670	5.00	< 0.01	21.7	40	
ML1	6	6/6/2013		1.0 GPM Step 2							3730	5.83	< 0.01	2.31	-84	
ML2	3	6/6/2013		1.0 GPM Step 2							39900	4.05	< 0.01	6.31	141	
ML2	4	6/6/2013		1.0 GPM Step 2							16200	4.92	3.21	70.2	80	
ML2	5	6/6/2013		1.0 GPM Step 2							7190	5.60	< 0.01	9.48	-39	
ML2	6	6/6/2013		1.0 GPM Step 2							3720	5.72	< 0.01	6.42	-48	
EW	1	6/26/2013		1.0 GPM Step 2							> 99,000	4.32	< 0.01	0.41	170	
ML1	3	6/26/2013		1.0 GPM Step 2							80600	4.53	< 0.01	3.14	125	
ML1	4	6/26/2013		1.0 GPM Step 2							34900	5.25	< 0.01	6.19	82	
ML1	5	6/26/2013		1.0 GPM Step 2							13800	5.45	< 0.01	3.92	48	
ML1	6	6/26/2013		1.0 GPM Step 2							8860	6.02	< 0.01	41.6	-13	
ML2	3	6/26/2013		1.0 GPM Step 2							82800	4.56	0.33	22.3	162	
ML2	4	6/26/2013		1.0 GPM Step 2							32000	5.93	0.21	68.4	18	
ML2	5	6/26/2013		1.0 GPM Step 2							13800	6.06	< 0.01	2.7	-8	
ML2	6	6/26/2013		1.0 GPM Step 2							6360	6.09	< 0.01	3.6	12	
EW	1	7/18/2013		1.0 GPM Step 2							93000	3.44	< 0.01	0.8	166	
ML1	3	7/18/2013		1.0 GPM Step 2							36900	3.70	< 0.01	15.5	119	
ML1	4	7/18/2013		1.0 GPM Step 2							15000	4.54	< 0.01	8.59	76	
ML1	5	7/18/2013		1.0 GPM Step 2							6470	4.60	< 0.01	3.55	53	
ML1	6	7/18/2013		1.0 GPM Step 2							3410	5.38	< 0.01	0.62	-61	
ML2	3	7/18/2013		1.0 GPM Step 2							38400	3.71	< 0.01	7.56	134	
ML2	4	7/18/2013		1.0 GPM Step 2							14400	5.29	< 0.01	31.5	-55	
ML2	5	7/18/2013		1.0 GPM Step 2							6710	5.33	< 0.01	2.64	-66	
ML2	6	7/18/2013		1.0 GPM Step 2							4970	4.56	< 0.01	22.7	74	
EW	1	10/29/2013		1.0 GPM Step 2							94400	3.72	< 0.01	1.91	164	
ML1	3	10/29/2013		1.0 GPM Step 2							37700	3.93	< 0.01	6.75	126	
ML1	4	10/29/2013		1.0 GPM Step 2							15600	4.81	< 0.01	19.1	84	
ML1	5	10/29/2013		1.0 GPM Step 2							7360	4.90	< 0.01	5.01	70	
ML1	6	10/29/2013		1.0 GPM Step 2							3790	5.55	0.01	2.96	-36	
ML2	3	10/29/2013		1.0 GPM Step 2							38100	4.02	< 0.01	99.1	113	
ML2	4	10/29/2013		1.0 GPM Step 2							14400	5.71	0.04	35	-31	
ML2	5	10/29/2013		1.0 GPM Step 2							7100	5.62	< 0.01	0.81	-8	
ML2	6	10/29/2013		1.0 GPM Step 2							3380	5.44	< 0.01	0.69	28	
EW	1	11/1/2013	11/1/2013	1.0 GPM Step 2	13:50	90000	11000	4820	3160	2640	89200	3.73	< 0.01	1.6	164	
ML1	3	11/1/2013	11/1/2013	1.0 GPM Step 2	12:35	12400	4540	114	306	402	33700	3.96	< 0.01	4.38	131	
ML1	4	11/1/2013	11/1/2013	1.0 GPM Step 2	12:15	6900	1410	885	68	114	14300	4.84	< 0.01	20	106	
ML1	5	11/1/2013	11/1/2013	1.0 GPM Step 2	12:00	3200	526	407	9.4	19.6	6620	5.07	< 0.01	2.99	84	
ML1	6	11/1/2013	11/1/2013	1.0 GPM Step 2	11:40	350	221.5	174	12.4	29.6	3310	5.63	< 0.01	0.55	-20	

Prepared by: LJ 11/04/2014
Checked by: PHT 11/04/2014

Table 3-2: Water Quality Monitoring Results for Pumping Step 2
DAPL Extraction Pilot Study
Performance Evaluation Report

Olin Wilmington Superfund Site
Wilmington, MA

Well ID	Port	Collection Date	Analysis Date	Period Description	Analysis Time	Sulfate (mg/L)	Chloride (mg/L)	Ammonia (mg/L)	Ferrous Iron (mg/L)	Total Iron (mg/L)	Conductivity (umohs/cm)	pH	Dissolved O2 (mg/L)	Turbidity (NTU)	ORP/Eh (mV)	Comments
ML2	3	11/1/2013	11/1/2013	1.0 GPM Step 2	13:40	24400	3160	2648	428	324	37200	4.00	< 0.01	14.5	111	
ML2	4	11/1/2013	11/1/2013	1.0 GPM Step 2	13:25	1840	1170	932	31.2	55	13800	5.79	< 0.01	11.6	-45	
ML2	5	11/1/2013	11/1/2013	1.0 GPM Step 2	13:10	1520	499	382	14.7	27.6	6710	5.62	< 0.01	3.06	-23	
ML2	6	11/1/2013	11/1/2013	1.0 GPM Step 2	12:50	760	374	184	5.9	13.6	3550	5.53	< 0.01	8.8	3	

Notes:
mg/L = micrograms per Liter
umohs/cm = microOhms per centimeter
NTU = nephelometric
mV = miliVolts
Blank cells indicate data collection not required.

Prepared by: LJ 11/04/2014
Checked by: PHT 11/04/2014

Table 3-3: Water Quality Monitoring Results for Pumping Step 3
DAPL Extraction Pilot Study
Performance Evaluation Report

Olin Wilmington Superfund Site
Wilmington, MA

Well ID	Port	Collection Date	Analysis Date	Period Description	Analysis Time	Sulfate (mg/L)	Chloride (mg/L)	Ammonia (mg/L)	Ferrous Iron (mg/L)	Total Iron (mg/L)	Conductivity (umohs/cm)	pH	Dissolved O2 (mg/L)	Turbidity (NTU)	ORP/Eh (mV)
EW	1	12/4/2013		2.0 GPM Step 3							77200	3.63	< 0.01	0.9	205
ML1	3	12/4/2013		2.0 GPM Step 3							26600	3.98	< 0.01	1.36	177
ML1	4	12/4/2013		2.0 GPM Step 3							11800	5.22	< 0.01	10.3	106
ML1	5	12/4/2013		2.0 GPM Step 3							5810	5.53	0.08	10.6	83
ML1	6	12/4/2013		2.0 GPM Step 3							3240	5.94	0.37	10.4	43
ML2	3	12/4/2013		2.0 GPM Step 3							22200	4.14	< 0.01	1.98	147
ML2	4	12/4/2013		2.0 GPM Step 3							11400	6.04	< 0.01	8.2	13
ML2	5	12/4/2013		2.0 GPM Step 3							6040	5.86	< 0.01	1.11	36
ML2	6	12/4/2013		2.0 GPM Step 3							3140	5.83	< 0.01	3.59	55
MP2	3	12/4/2013		2.0 GPM Step 3							42800	3.75	0.07	4.2	230
MP2	4	12/4/2013		2.0 GPM Step 3							13000	4.16	0.12	9.8	229
MP2	6	12/4/2013		2.0 GPM Step 3							2840	4.61	0.48	0.2	2.8
EW	1	12/6/2013		2.0 GPM Step 3							70500	3.64	< 0.01	0.41	202
ML1	3	12/6/2013		2.0 GPM Step 3							21400	4.01	< 0.01	1.84	165
ML1	4	12/6/2013		2.0 GPM Step 3							9370	5.28	0.05	14	105
ML1	5	12/6/2013		2.0 GPM Step 3							5250	5.46	0.23	0.92	90
ML1	6	12/6/2013		2.0 GPM Step 3							2880	5.96	0.35	2.68	45
ML2	3	12/6/2013		2.0 GPM Step 3							23300	4.05	< 0.01	1.64	148
ML2	4	12/6/2013		2.0 GPM Step 3							9620	5.91	< 0.01	5.02	26
ML2	5	12/6/2013		2.0 GPM Step 3							4990	5.82	< 0.01	0.72	48
ML2	6	12/6/2013		2.0 GPM Step 3							2890	5.80	< 0.01	1.54	67
MP2	3	12/6/2013		2.0 GPM Step 3							37600	3.72	0.2	2.37	231
MP2	4	12/6/2013		2.0 GPM Step 3							10900	4.19	0.3	1.41	232
MP2	6	12/6/2013		2.0 GPM Step 3							2430	4.76	0.6	0.23	212
EW	1	12/11/2013		2.0 GPM Step 3							77500	3.67	< 0.01	0.63	206
ML1	3	12/11/2013		2.0 GPM Step 3							20500	4.15	< 0.01	27.6	186
ML1	4	12/11/2013		2.0 GPM Step 3							9690	5.54	< 0.01	18	92
ML1	5	12/11/2013		2.0 GPM Step 3							4900	5.48	0.44	2.58	100
ML1	6	12/11/2013		2.0 GPM Step 3							2740	6.09	0.66	0.97	40
ML2	3	12/11/2013		2.0 GPM Step 3							21300	4.19	< 0.01	12.7	167
ML2	4	12/11/2013		2.0 GPM Step 3							9380	6.04	< 0.01	9.39	30
ML2	5	12/11/2013		2.0 GPM Step 3							4990	5.90	0.1	2.3	51
ML2	6	12/11/2013		2.0 GPM Step 3							2750	5.97	0.54	3.11	63
EW	1	12/19/2013		2.0 GPM Step 3							72300	3.69	< 0.01	1.08	220
ML1	3	12/19/2013		2.0 GPM Step 3							18700	4.09	0.02	3.07	202
ML1	4	12/19/2013		2.0 GPM Step 3							9130	5.56	0.02	7.45	84
ML1	5	12/19/2013		2.0 GPM Step 3							4370	5.52	0.22	2.41	90
ML1	6	12/19/2013		2.0 GPM Step 3							2690	5.73	0.88	0.7	80
ML2	3	12/19/2013		2.0 GPM Step 3							20000	4.41	0.08	10.1	168
ML2	4	12/19/2013		2.0 GPM Step 3							9410	5.83	0.34	18.2	60
ML2	5	12/19/2013		2.0 GPM Step 3							4860	5.66	< 0.01	0.73	77
ML2	6	12/19/2013		2.0 GPM Step 3							2830	5.68	0.08	7.31	94
EW	1	12/31/2013		2.0 GPM Step 3							69515	3.77	0.77	15.2	191
ML1	3	12/31/2013		2.0 GPM Step 3							16175	4.39	1.21	3.81	114.2
ML1	4	12/31/2013		2.0 GPM Step 3							8109	5.43	1.31	3.26	0.8
ML1	6	12/31/2013		2.0 GPM Step 3							2649	5.96	0.66	0.72	-11.9
ML2	3	12/31/2013		2.0 GPM Step 3							17566	4.29	0.78	5.22	120.5
ML2	4	12/31/2013		2.0 GPM Step 3							8088	6.05	2.93	1.62	-9.9
ML2	5	12/31/2013		2.0 GPM Step 3							4411	5.88	0.69	1.69	-33
ML2	6	12/31/2013		2.0 GPM Step 3							2607	5.74	0.61	6.27	-61.2
EW	1	2/4/2014		2.0 GPM Step 3							68300	3.77	< 0.01	7.52	212
ML1	3	2/4/2014		2.0 GPM Step 3							12100	4.40	< 0.01	16.3	184
ML1	4	2/4/2014		2.0 GPM Step 3							6980	5.80	0.12	11.9	93
ML1	5	2/4/2014		2.0 GPM Step 3							3380	5.31	0.24	3.59	125
ML1	6	2/4/2014		2.0 GPM Step 3							2600	6.10	0.58	0.61	38

Prepared by: LJ 11/04/2014
Checked by: PHT 11/04/2014

Table 3-3: Water Quality Monitoring Results for Pumping Step 3
DAPL Extraction Pilot Study
Performance Evaluation Report

Olin Wilmington Superfund Site
Wilmington, MA

Well ID	Port	Collection Date	Analysis Date	Period Description	Analysis Time	Sulfate (mg/L)	Chloride (mg/L)	Ammonia (mg/L)	Ferrous Iron (mg/L)	Total Iron (mg/L)	Conductivity (umohs/cm)	pH	Dissolved O2 (mg/L)	Turbidity (NTU)	ORP/Eh (mV)
ML2	3	2/4/2014		2.0 GPM Step 3							13100	4.60	< 0.01	6.77	166
ML2	4	2/4/2014		2.0 GPM Step 3							6150	6.04	< 0.01	85.9	60
ML2	5	2/4/2014		2.0 GPM Step 3							3750	5.92	0.02	8.23	64
ML2	6	2/4/2014		2.0 GPM Step 3							2480	5.94	< 0.01	0.8	91
ML1	3	4/11/2014		2.0 GPM Step 3							4930	4.47	< 0.01	3.63	170
ML1	4	4/11/2014		2.0 GPM Step 3							2780	5.80	0.04	6.87	48
ML1	5	4/11/2014		2.0 GPM Step 3							2370	5.24	0.09	0.48	104
ML1	6	4/11/2014		2.0 GPM Step 3							2450	5.97	< 0.01	0.92	28
ML2	3	4/11/2014		2.0 GPM Step 3							12300	4.59	< 0.01	1.33	151
ML2	4	4/11/2014		2.0 GPM Step 3							6030	6.09	0.02	1.82	4
ML2	5	4/11/2014		2.0 GPM Step 3							5730	5.97	0.23	2.97	30
ML2	6	4/11/2014		2.0 GPM Step 3							2370	5.68	0.53	1.63	95
EW	1	5/5/2014		2.0 GPM Step 3							63500	3.76	< 0.01	2.12	208
ML1	1	5/5/2014		2.0 GPM Step 3							21500	4.07	< 0.01	1.49	209
ML1	2	5/5/2014		2.0 GPM Step 3							10500	4.24	0.03	0.85	219
ML1	3	5/5/2014		2.0 GPM Step 3							6430	4.51	< 0.01	0.76	168
ML1	4	5/5/2014		2.0 GPM Step 3							4530	6.05	< 0.01	2.6	31
ML1	5	5/5/2014		2.0 GPM Step 3							2380	5.26	0.1	0.42	107
ML1	6	5/5/2014		2.0 GPM Step 3							2300	6.01	0.28	1.16	44
ML2	1	5/5/2014		2.0 GPM Step 3							17800	4.03	< 0.01	1.1	204
ML2	2	5/5/2014		2.0 GPM Step 3							13200	4.34	< 0.01	2.12	197
ML2	3	5/5/2014		2.0 GPM Step 3							8520	4.88	< 0.01	144	132
ML2	4	5/5/2014		2.0 GPM Step 3							5310	6.18	< 0.01	1.92	-3
ML2	5	5/5/2014		2.0 GPM Step 3							2870	5.86	1.04	0.48	47
ML2	6	5/5/2014		2.0 GPM Step 3							2260	5.85	0.26	0.67	72
MP2	3	5/5/2014		2.0 GPM Step 3							27000	3.84	< 0.01	2.16	248
MP2	4	5/5/2014		2.0 GPM Step 3							8200	4.56	< 0.01	2.18	246
MP2	6	5/5/2014		2.0 GPM Step 3							3290	4.67	0.18	1.71	202
EW	1	5/14/2014	5/14/2014	2.0 GPM Step 3	11:10	15200	8400	4360	374	308	56800	3.72	3.91	1.9	25
ML1	1	5/14/2014		2.0 GPM Step 3							15200	4.09	< 0.01	1.76	216
ML1	2	5/14/2014		2.0 GPM Step 3							7960	4.30	0.25	0.84	207
ML1	3	5/14/2014		2.0 GPM Step 3							4720	4.92	0.19	1.22	127
ML1	4	5/14/2014		2.0 GPM Step 3							3330	5.93	< 0.01	2.71	43
ML1	5	5/14/2014		2.0 GPM Step 3							2060	5.27	0.33	0.82	100
ML1	6	5/14/2014		2.0 GPM Step 3							2090	5.83	0.23	0.57	42
ML2	1	5/14/2014		2.0 GPM Step 3							13600	4.05	0.2	0.75	212
ML2	2	5/14/2014		2.0 GPM Step 3							10500	4.34	0.25	1.39	198
ML2	3	5/14/2014		2.0 GPM Step 3							6060	5.08	0.12	1.62	113
ML2	4	5/14/2014		2.0 GPM Step 3							4200	6.05	0.14	1.21	1
ML2	5	5/14/2014		2.0 GPM Step 3							2320	5.69	0.19	1.03	45
ML2	6	5/14/2014		2.0 GPM Step 3							1950	5.51	0.52	0.95	91
MP2	1	5/14/2014	5/14/2014	2.0 GPM Step 3	11:25	24000	8250	5770	306	876	77000	3.58	< 0.01	1.45	217
MP2	3	5/14/2014	5/14/2014	2.0 GPM Step 3	11:45	18800	675	1030	223	336	24100	3.84	< 0.01	1.18	233
MP2	4	5/14/2014	5/14/2014	2.0 GPM Step 3	12:00	4600	525	877	36	52	7140	4.62	< 0.01	0.74	207
MP2	6	5/14/2014	5/14/2014	2.0 GPM Step 3	12:35	145	675	644	2.92	9.15	2750	4.64	0.38	1.22	221

Notes:
mg/L = micrograms per Liter
umohs/cm = microOhms per centimeter
NTU = nephelometric
mV = miliVolts
Blank cells indicate data collection not required.

Prepared by: LJ 11/04/2014
Checked by: PHT 11/04/2014

Table 3-4: Tabulated Water Level Data
DAPL Extraction Pilot Study
Performance Evaluation Report

Olin Wilmington Superfund Site
Wilmington, MA

Well Location	EW1		ML-1						ML-2						MP-2						GW-42D		GW-43DR	
Port (for multilevels)			ML1 P-12		ML1 P-9		ML1 P-4		ML2 P-12		ML2 P-9		ML2 P-4		MP2 P-16		MP2 P-10		MP2 P-2					
Reference Datum	TOG		TOST		TOST		TOST		TOST		TOST		TOST		TOC		TOC		TOC		TOC		TOC	
Reference Elevation (FT MSL)	84.8		87.15		87.20		87.13		87.22		87.21		87.18		87.56		87.32		87.25		84.16		88.14	
Water Table Measurement	DTW (FT)	ELEV (FTMSL)	DTW (FT)	ELEV (FTMSL)	DTW (FT)	ELEV (FTMSL)	DTW (FT)	ELEV (FTMSL)	DTW (FT)	ELEV (FTMSL)	DTW (FT)	ELEV (FTMSL)	DTW (FT)	ELEV (FTMSL)	DTW (FT)	ELEV (FTMSL)	DTW (FT)	ELEV (FTMSL)	DTW (FT)	ELEV (FTMSL)	DTW (FT)	ELEV (FTMSL)	DTW (FT)	ELEV (FTMSL)
10/25/2012			5.8	81.35	5.8	81.40	5.8	81.33	5.8	81.42	5.8	81.41	5.8	81.38										
11/1/2012			4.0	83.15	4.0	83.20	4.0	83.13																
11/2/2012																					2.45	81.71	4.43	83.71
11/6/2012	3.78	81.02			5.25	81.95	6	81.13	5.25	81.97	5.25	81.96	6.0	81.2										
11/7/2012	3.78	81.02			5.25	81.95	6	81.13	5.25	81.97	5.25	81.96	6.0	81.2										
11/8/2012	3.78	81.02			5.25	81.95	6	81.13	5.25	81.97														
11/12/2012																					3.48	80.68	6.57	81.57
11/13/2012	3.78	81.02	6.75	80.40	6.75	80.45	6.33	80.80			5.25	81.96	6.0	81.2										
11/16/2012	3.75	81.05	5.25	81.90	5.25	81.95	5.25	81.88			5.25	81.96	6.0	81.2										
11/19/2012	NM										5	82.21	5.5	81.7	10.5	77.06	5.5	81.82	7.5	79.75	3.79	80.37	6.61	81.53
11/26/2012			5.55	81.60	5.5	81.70	4.5	82.63																
11/27/2012	3.79	81.01							5.4	81.82	6.15	81.06	6.15	81.0										
12/4/2012	PD																							
12/12/2011																					1.89	82.27		
12/14/2011																					1.89	82.27		
9/20/2012																							7.01	81.13
12/19/2012																					0.25	83.91	6.37	81.77
12/20/2011																							6.41	81.73
1/3/2013									5.25	81.97	5.4	81.81	5.85	81.3										
1/7/2013	3.66	81.14							5.4	81.82	5.4	81.81	5.85	81.3										
1/8/2013			5.90	81.25	5.94	81.26	5.96	81.17																
1/9/2013															5.85	81.71	5.40	81.92	7.05	80.2				
1/10/2013																					1.88	82.28	6.42	81.72
1/28/2013	3.77	81.03							5.98	81.24	5.78	81.43	5.78	81.4										
1/29/2013			5.75	81.40	5.75	81.45	5.98	81.15																
1/30/2013															5.95	81.61	NM		7.35	79.9				
12/2/2013																								
2/6/2013																					3.85	80.31	6.54	81.6
2/12/2013	3.71	81.09							5.1	82.12	5.1	82.11	5.94	81.2										
2/13/2013			4.65	82.50	3.6	83.60	5.7	81.43																
2/20/2013	3.72	81.08																						
3/5/2013	3.31	81.49	5.58	81.57	5.66	81.54	6.11	81.02	5.64	81.58	5.65	81.56	6.02	81.2							0.77	83.39	6.11	82.03
3/7/2013			5.61	81.54	5.25	81.95	4.55	82.58	5.71	81.51	5.7	81.51	4.75	82.4										
3/18/2013																					0.75	83.41	6.19	81.95
3/27/2013	3.74	81.06	5.66	81.49	5.68	81.52	6.09	81.04	5.73	81.49	5.73	81.48	6.07	81.1										
4/17/2013	4.58	80.22	5.87	81.28	5.96	81.24	6.32	80.81	5.96	81.26	5.99	81.22	6.32	80.9					2.37	84.88	1.94	82.22		
4/24/2013	4.51	80.29	5.82	81.33	5.87	81.33	6.28	80.85	5.67	81.55	5.67	81.54	6.32	80.86										
5/13/2013																					4.01	80.15	6.52	81.62
5/16/2013	4.61	80.19	6.03	81.12	6.1	81.10	6.37	80.76	6.07	81.15	6.08	81.13	6.38	80.80	4.84	82.72	2.78	84.54	2.41	84.84				
5/21/2013	4.67	80.13																						
5/27/2013	4.63	80.17																						
6/13/2013																								
6/18/2013	4.35	80.45																						
6/25/2013																					2.5	81.66	6.21	81.93
6/26/2013	4.24	80.56	5.75	81.40	5.82	81.38	6.02	81.11	MNR		5.82	81.39	6.01	81.17										

Table 3-4: Tabulated Water Level Data
DAPL Extraction Pilot Study
Performance Evaluation Report

Olin Wilmington Superfund Site
Wilmington, MA

Well Location	EW1		ML-1						ML-2						MP-2						GW-42D		GW-43DR	
Port (for multilevels)			ML1 P-12		ML1 P-9		ML1 P-4		ML2 P-12		ML2 P-9		ML2 P-4		MP2 P-16		MP2 P-10		MP2 P-2					
Reference Datum	TOG		TOST		TOST		TOST		TOST		TOST		TOST		TOC		TOC		TOC		TOC		TOC	
Reference Elevation (FT MSL)	84.8		87.15		87.20		87.13		87.22		87.21		87.18		87.56		87.32		87.25		84.16		88.14	
Water Table Measurement	DTW (FT)	ELEV (FTMSL)	DTW (FT)	ELEV (FTMSL)	DTW (FT)	ELEV (FTMSL)	DTW (FT)	ELEV (FTMSL)	DTW (FT)	ELEV (FTMSL)	DTW (FT)	ELEV (FTMSL)	DTW (FT)	ELEV (FTMSL)	DTW (FT)	ELEV (FTMSL)	DTW (FT)	ELEV (FTMSL)	DTW (FT)	ELEV (FTMSL)	DTW (FT)	ELEV (FTMSL)	DTW (FT)	ELEV (FTMSL)
7/5/2013	4.32	80.48																						
7/12/2013	4.5	80.30																						
7/16/2013																					3.28	80.88	6.61	81.53
12/2/2013	4.02	80.78	6.12	81.03	6.19	81.01	6.30	80.83	6.22	81	6.22	80.99	6.08	81.10							2.88	81.28	6.69	81.45
12/3/2013	4.88	79.92	6.16	80.99	6.22	80.98	6.32	80.81	6.24	80.98	6.24	80.97	6.36	80.82							3.41	80.75	6.72	81.42
12/4/2013	4.92	79.88	6.20	80.95	6.22	80.98	6.34	80.79	6.29	80.93	6.28	80.93	6.31	80.87							2.72	81.44	6.74	81.4
12/5/2013	4.92	79.88																			2.1	82.06		
12/6/2013	4.95	79.85	6.24	80.91	6.24	80.96	6.24	80.89	6.31	80.91	6.29	80.92	6.26	80.92							under water		6.77	81.37
12/9/2013																								
12/11/2013	4.8	80.00	6.19	80.96	6.18	81.02	6.18	80.95	6.19	81.03	6.21	81.00	6.29	80.89							0.25	83.91	6.65	81.49
12/16/2013																					1.63	82.53	under snow pile	
12/19/2013	4.85	79.95	6.18	80.97	6.23	80.97	6.23	80.90	6.25	80.97	6.24	80.97	6.36	80.82										
12/23/2013																								
1/13/2014	4.25	80.55																			under snow and ice		6.29	81.85
2/3/2014	4.31	80.49																			under snow and ice		6.53	81.61
2/4/2014	4.32	80.48	*				6.05	81.08	*		*		*								*			
3/4/2014																								
4/9/2014																					5.68	78.48	6.07	82.07
4/11/2014	3.24	81.56	5.64	81.51	5.53	81.67	5.53	81.60	*		5.66	81.55	5.81	81.37										

Notes:

Meaurement Datums

Reference Datum is the Measurement Point

TOG =Top of Fiberglass Grate in Extraction Pump Vault
TOST = Top of Sample Tube for Multilevel Wells
TOC = Top of casing for conventional wells
Reference Elevation = Elevation of Reference Datum in Feet Mean Sea level

Water Level Measurements

DTW = Depth to Water Measured in Feet from the Reference Datum
ELEV (FTMSL) = Calculated Elevation of Water Table in Feet above Mean Sea Level (Reference Elevation - DTW)

Other

MNR= Meter not responding
NM= not measured
PD= Pump Down (12/04/2012)
*=no water level was obtained meter tested ok but would not detect water level
TP=Water level obtained from tip of probe

Prepared by: BJR 4/30/2013
Checked by: PHT 7/16/2014

Table 3-5: Calculated Vertical Hydraulic Gradient
DAPL Extraction Pilot Study
Performance Evaluation Report

Olin Wilmington Superfund Site
Wilmington, MA

Well Location	EW1		ML-1						ML-2						ML1/ML2 Horiz Gradient		
Port			ML1 P-12		ML1 P-9		ML1 P-4		ML2 P-12		ML2 P-9		ML2 P-4		P-12	P-9	P-4
Meaurement in Feet	DTW		DTW		DTW		DTW		DTW		DTW		DTW				
Reference Datum	TOG		TOST		TOST		TOST		TOST		TOST		TOST				
Reference Elevation		84.8		87.15		87.2		87.13		87.22		87.21		87.18			
4/17/2013	4.58	80.22	5.87	81.28	5.96	81.24	6.32	80.81	5.96	81.26	5.99	81.22	6.32	80.9	0.00133	0.001333	-0.003333
4/24/2013	4.51	80.29	5.82	81.33	5.87	81.33	6.28	80.85	5.67	81.55	5.67	81.54	6.32	80.9	-0.0147	-0.014	-0.000667
5/16/2013	4.61	80.19	6.03	81.12	6.10	81.10	6.37	80.76	6.07	81.15	6.08	81.13	6.38	80.8	-0.002	-0.002	-0.002667
12/2/2013	4.02	80.78	6.12	81.03	6.19	81.01	6.30	80.83	6.22	81	6.22	80.99	6.08	81.1	0.002	0.001333	-0.018
12/3/2013	4.88	79.92	6.16	80.99	6.22	80.98	6.32	80.81	6.24	80.98	6.24	80.97	6.36	80.8	0.00067	0.000667	-0.000667
12/4/2013	4.92	79.88	6.20	80.95	6.22	80.98	6.34	80.79	6.29	80.93	6.28	80.93	6.31	80.9	0.00133	0.003333	-0.005333
12/6/2013	4.95	79.85	6.24	80.91	6.24	80.96	6.24	80.89	6.31	80.91	6.29	80.92	6.26	80.9	9.5E-16	0.002667	-0.002
12/11/2013	4.8	80.00	6.19	80.96	6.18	81.02	6.18	80.95	6.19	81.03	6.21	81.00	6.29	80.9	-0.0047	0.001333	0.004
12/19/2013	4.85	79.95	6.18	80.97	6.23	80.97	6.23	80.90	6.25	80.97	6.24	80.97	6.36	80.8	0	0	0.005333
4/11/2014	**4.24**	80.56	5.64	81.51	5.53	81.67	5.53	81.60			5.66	81.55	5.81	81.4		0.008	0.015333

Elevation References	EW-1	ML1 P-12	ML1 P-9	ML1 P-4	ML2 P-12	ML2 P-9	ML2 P-4
Midpoint of Screen	45 ft MSL						
Midpoint of Port		65.2 ft MSL	60.8 ft MSL	53.4 ft MSL	65.2 ft MSL	60.8 ft MSL	53.4 ft MSL

Vertical Gradient Calculation- EW-1 to:	**ML1 P-12**		**ML1 P-9**		**ML1 P-4**		**ML2 P-12**		**ML2 P-9**		**ML2 P-4**	
Distance EW-1 to MP Ports	dL	20.2		15.8		8.4		20.2		15.8		8.4
Head Differecen and Gradient	dH	**dH/dL**	dH	**dH/dL**	dH	**dH/dL**	dH	**dH/dL**	dH	**dH/dL**	dH	**dH/dL**
4/17/2013	1.06	**0.05**	1.02	**0.06**	0.59	**0.07**	1.04	**0.05**	1.00	**0.06**	0.64	**0.08**
4/24/2013	1.04	**0.05**	1.04	**0.07**	0.56	**0.07**	1.26	**0.06**	1.25	**0.08**	0.57	**0.07**
5/16/2013	0.93	**0.05**	0.91	**0.06**	0.57	**0.07**	0.96	**0.05**	0.94	**0.06**	0.61	**0.07**
12/2/2013	0.25	**0.01**	0.23	**0.01**	0.05	**0.01**	0.22	**0.01**	0.21	**0.01**	0.32	**0.04**
12/3/2013	1.07	**0.05**	1.06	**0.07**	0.89	**0.11**	1.06	**0.05**	1.05	**0.07**	0.90	**0.11**
12/4/2013	1.07	**0.05**	1.10	**0.07**	0.91	**0.11**	1.05	**0.05**	1.05	**0.07**	0.99	**0.12**
12/6/2013	1.06	**0.05**	1.11	**0.07**	1.04	**0.12**	1.06	**0.05**	1.07	**0.07**	1.07	**0.13**
12/11/2013	0.96	**0.05**	1.02	**0.06**	0.95	**0.11**	1.03	**0.05**	1.00	**0.06**	0.89	**0.11**
12/19/2013	1.02	**0.05**	1.02	**0.06**	0.95	**0.11**	1.02	**0.05**	1.02	**0.06**	0.87	**0.10**
4/11/2014	0.95	**0.05**	1.11	**0.07**	0.95	**0.11**			0.99	**0.06**	0.81	**0.10**

Notes:

Gradient = dH/dL — Positive value indicates downward gradient

Difference in Head =dH — dH= Port water elevation minus EW-1 water elevation

Measurement Distance =dL — dL = distance between EW-1 screen midpoint and port midpoint

Prepared by: BJR 4/30/2013
Checked by: PHT 7/16/2014

P-9 = Port 9
DTW = DTW in feet from Measurement point

Measurement Points
TOG=Top of Fiberglass Grate in Vault
TOST = Top of Sample Tube

Table 4-1: Revised DAPL Pool Volume Estimate
DAPL Extraction Pilot Study
Performance Evaluation Report

Olin Wilmington Superfund Site
Wilmington, MA

Calculation of Revised Bedrock Contours									**Porosity**	**0.3**
Bedrock Contour	**Area (ft^2)**	**Iterval**	**H (ft)**	**Sum**	**Average**	**Slice Volume CF**	**gal/cf**	**Slice Volume Gal**	**Volume of DAPL**	
55	172,091	55-50	5	283,564	141,782	708,910	7.48	5,302,647	1,590,794	
50	111,473	50-45	5	176,254	88,127	440,635	7.48	3,295,950	988,785	
45	64,781	45-40	5	91,678	45,839	229,195	7.48	1,714,379	514,314	
40	26,897									
Total						1,378,740	7.48	10,312,975	**3,093,893**	**Gal**

This spreadsheet provides an end area calculation of DAPL Pool Volume based on surface area of contours in bedrock contours figures

Prepared by PHT 2/8/2012
Checked by BJR 2/8/2012

Notes:
ft = foot or feet
ft^2 = feet squared
cf = cubic feet
Gal= gallon
gal/cf = gallons per cubic foot
Slice Volume = average area of bedrock contor multiplied by thickness (average end area)

Table 4-2: Estimated Unifporm DAPL Pool Elevation Change
DAPL Extraction Pilot Study
Performance Evaluation Report

Olin Wilmington Superfund Site
Wilmington, MA

Calculation of Revised Bedrock Contours										
				Slice Area					Porosity	0.3
Bedrock Contour	Area (ft^2)	Interval	H (ft)	Sum	Average	Slice Volume CF	gal/cf	Slice Volume Gal	Volume of DAPL	
55	172,091	55							-	
54	159,967	55-54	1	332,058	166,029	166,029.2	7.48	1,241,898	372,570	Gal
53	147,844	54-53	1	307,811	153,906	153,905.6	7.48	1,151,214	345,364	Gal
52	135,720	53-52								
51	123,597	52-51								
50	111,473	50								
per foot	12,124									
Total Drawdown (Based on T&D gallons)			**1.66 ft**						**596,727**	**Gal**
Total Drawdown (Based on undiluted gallons)			**1.33 ft**						**477,382**	**Gal**

This spreadsheet provides an end area calculation of DAPL Pool Volume Based on surface area of contours in bedrock contour figure
DAPL Extraction Pumping Test

Pilot Max Target	756,000	gallons
Pumped to date (T&D 5/20/20	596,727	gallons T&D
Potential Dilution	20%	dilution
Minimum DAPL Pumped	477,382	gallons undiluted

Prepared by PHT 5/24/2014
Checked by BJR 11/04/2014

Notes:
ft = foot or feet
ft^2 = feet squared
cf = cubic feet
Gal= gallons
gal/cf = gallons per cubic foot
Slice Volume = average area of bedrock contor multiplied by thickness (average end area)

APPENDIX A
DAPL EXTRACTION SYSTEM DRAWINGS

DAPL EXTRACTION PILOT TEST

OLIN CHEMICAL SUPERFUND SITE
WILMINGTON, MASSACHUSETTS

ISSUED FOR CONSTRUCTION
MARCH 2011

2

DRAWING INDEX

INCLUDED IN THIS SUBMITTAL	SHEET NUMBER	DRAWING TITLE	DISCIPLINE NUMBER
●	1	COVER SHEET	G–001
●	2	PROPOSED SITE PLAN	C–101
●	3	PROPOSED PIPING PROFILE	C–201
●	4	PROPOSED PROFILE PIPE SLEEVES UNDER RAILROAD SPURS AND DETAILS	C–202
●	5	CIVIL DETAILS	C–301
●	6	CIVIL DETAILS	C–302
●	7	CIVIL DETAILS	C–303
●	8	CONSTRUCTION SPECIFICATIONS	C–304
●	9	PIPING AND INSTRUMENTATION DIAGRAM	D–601
●	10	ELECTRICAL GENERAL NOTES AND LEGEND	E–001
●	11	PROPOSED ELECTRICAL SITE PLAN	E–101
●	12	ELECTRICAL PLANS AND DETAIL	E–102
●	13	ELECTRICAL DETAILS	E–103
●	14	ONE–LINE, HEAT TRACE RISERS, WIRING DIAGRAMS, SCHEDULES	E–601
●	15	ELECTRICAL SPECIFICATIONS AND SEQUENCE OF OPERATIONS	E–602

MARK A. PETERS 35251 REGISTERED PROFESSIONAL ENGINEER COMMONWEALTH OF MASSACHUSETTS
3/9/11

This drawing is the property of MACTEC Engineering and Consulting, Inc. including all patented and patentable features, and/or confidential information and its use is conditioned upon the users agreement not to reproduce the drawing, in whole or part, nor the material described thereon, nor the use of the drawing for any purpose other than specifically permitted in writing by MACTEC Engineering and Consulting, Inc.

NO.	DATE	REVISIONS	BY	CHK
2	03/09/11	ISSUED FOR CONSTRUCTION	REO	MAP
1	02/12/10	FINAL	REO	MAP
0	12/07/09	ISSUED FOR BID	REO	MAP
A	11/12/09	FOR CLIENT REVIEW	REO	MAP

DRAWN: DEL	PROJECT NO: 6107–10–0016
ENGINEER: MAP	SCALE: –
CHECKED: REO	APPROVED: PHT
DATE: 12/08/10	DATE: 12/08/10

MACTEC

Engineering and Consulting, Inc.
P.O. Box 7050, 511 Congress Street
Portland, ME 04112–7050
(207) 775–5401

DAPL EXTRACTION PILOT TEST
OLIN CHEMICAL SUPERFUND SITE
WILMINGTON, MASSACHUSETTS

GENERAL

COVER SHEET

DRAWING NO: G–001

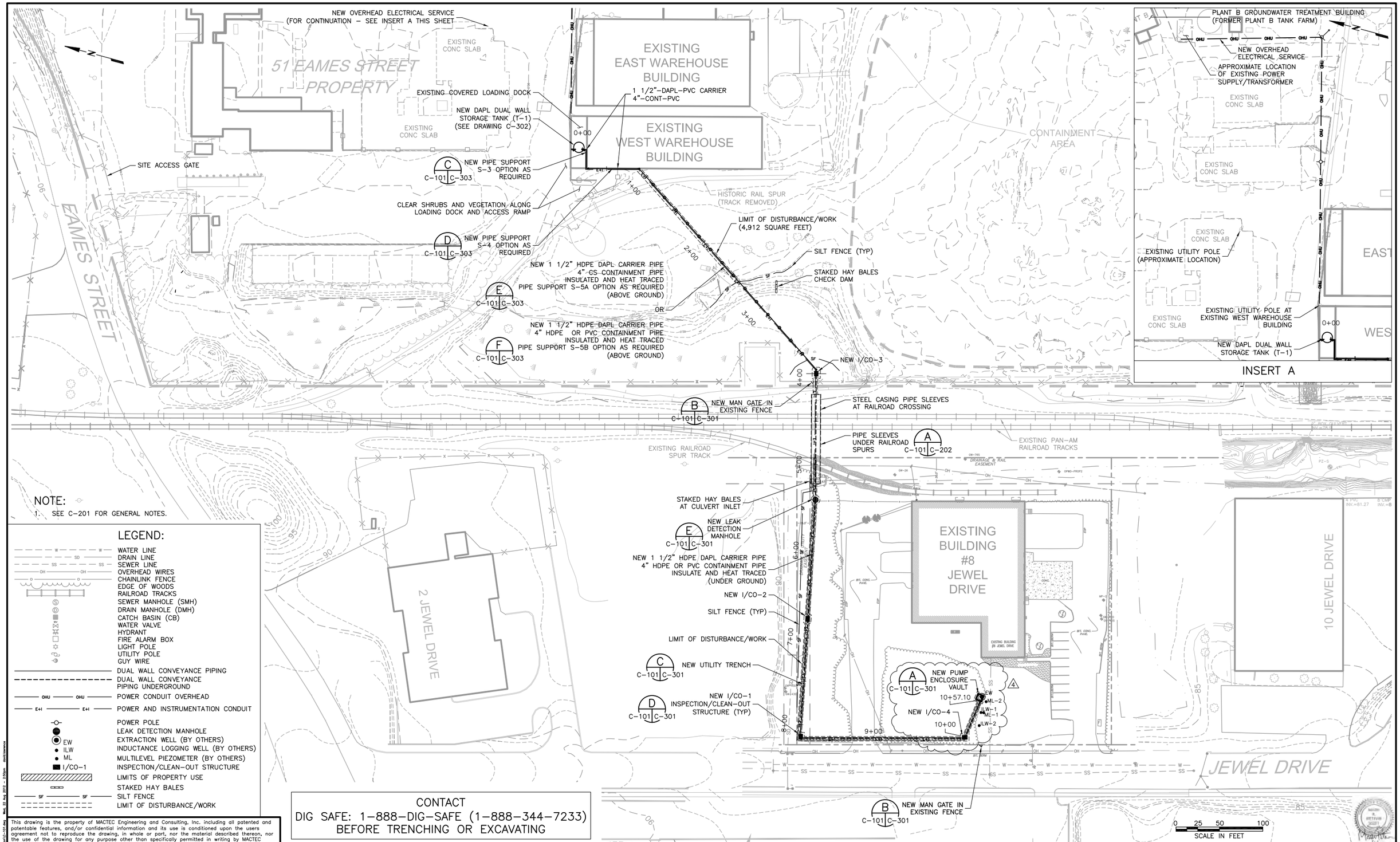

NOTE:

1. SEE C-201 FOR GENERAL NOTES.

LEGEND:

- WATER LINE
- DRAIN LINE
- SEWER LINE
- OVERHEAD WIRES
- CHAINLINK FENCE
- EDGE OF WOODS
- RAILROAD TRACKS
- SEWER MANHOLE (SMH)
- DRAIN MANHOLE (DMH)
- CATCH BASIN (CB)
- WATER VALVE
- HYDRANT
- FIRE ALARM BOX
- LIGHT POLE
- UTILITY POLE
- GUY WIRE
- DUAL WALL CONVEYANCE PIPING
- DUAL WALL CONVEYANCE PIPING UNDERGROUND
- POWER CONDUIT OVERHEAD
- POWER AND INSTRUMENTATION CONDUIT
- POWER POLE
- LEAK DETECTION MANHOLE
- EW — EXTRACTION WELL (BY OTHERS)
- ILW — INDUCTANCE LOGGING WELL (BY OTHERS)
- ML — MULTILEVEL PIEZOMETER (BY OTHERS)
- I/CO-1 — INSPECTION/CLEAN-OUT STRUCTURE
- LIMITS OF PROPERTY USE
- STAKED HAY BALES
- SILT FENCE
- LIMIT OF DISTURBANCE/WORK

CONTACT
DIG SAFE: 1-888-DIG-SAFE (1-888-344-7233)
BEFORE TRENCHING OR EXCAVATING

This drawing is the property of MACTEC Engineering and Consulting, Inc. including all patented and patentable features, and/or confidential information and its use is conditioned upon the users agreement not to reproduce the drawing, in whole or part, nor the material described thereon, nor the use of the drawing for any purpose other than specifically permitted in writing by MACTEC Engineering and Consulting, Inc.

NO.	DATE	REVISIONS	BY	CHK
4	11/03/11	REVISED LOCATION FOR EW AND VAULT	REO	MAP
3	04/05/11	ADDRESSED TOWN OF WILMINGTON COMMENTS	REO	MAP
2	03/09/11	ISSUED FOR CONSTRUCTION	REO	MAP
1	02/12/10	FINAL	REO	MAP
0	12/07/09	ISSUED FOR BID	REO	MAP
A	11/12/09	FOR CLIENT REVIEW	REO	MAP

DRAWN: DEL	PROJECT NO: 6107-10-0016
ENGINEER: MAP	SCALE: 1" = 50'
CHECKED: REO	APPROVED: PHT
DATE: 03/09/11	DATE: 03/09/11

MACTEC
Engineering and Consulting, Inc.
P.O. Box 7050, 511 Congress Street
Portland, ME 04112-7050
(207) 775-5401

DAPL EXTRACTION PILOT TEST
OLIN CHEMICAL SUPERFUND SITE
WILMINGTON, MASSACHUSETTS

CIVIL

PROPOSED SITE PLAN

DRAWING NO: C-101

2 / 15

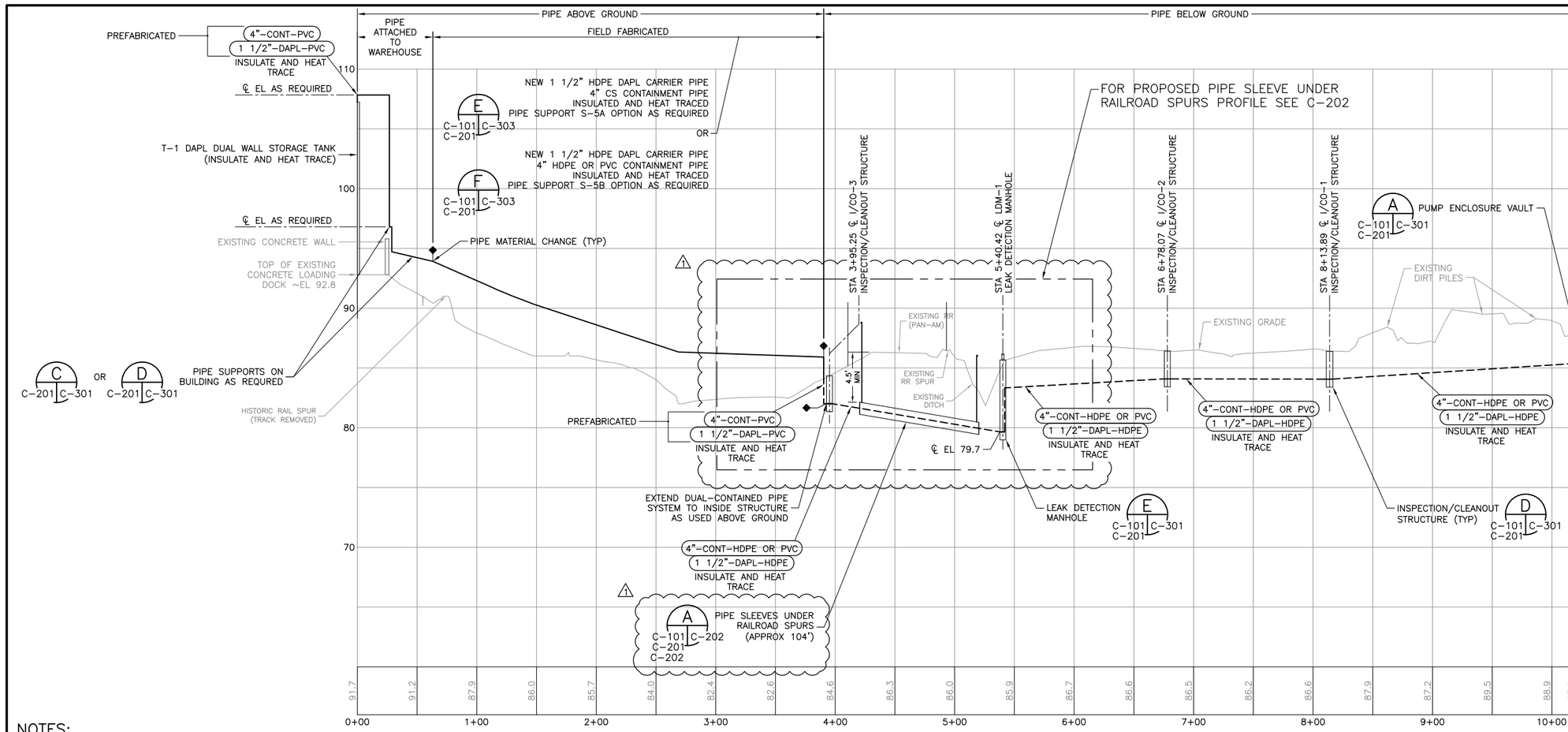

NOTES:

1. FOR PIPING ELEVATIONS AT STRUCTURES, SEE DRAWING C–301.

GENERAL NOTES:

1. COORDINATE USE OF THE SITE WITH OLIN, THE ENGINEER, AND THE SITE'S CURRENT OWNER.
2. KNOWN UNDERGROUND UTILITIES AND STRUCTURES ARE SHOWN ON THE DRAWINGS. THE LOCATION OF THESE EXISTING UNDERGROUND UTILITIES AND STRUCTURES SHOULD BE CONSIDERED APPROXIMATE THEREFORE, PRIOR TO THE COMMENCEMENT OF SITE ACTIVITIES, THE CONTRACTOR SHALL VERIFY THE LOCATION OF ALL EXISTING UTILITIES OR STRUCTURES IN THE AREAS OF WORK: DIG SAFE: 1–888–DIG–SAFE (1–888–344–7233). IF UTILITIES ARE TO REMAIN IN PLACE, PROVIDE ADEQUATE MEANS OF PROTECTION.
3. SHOULD UNCHARTED, OR INCORRECTLY CHARTED, PIPING OR OTHER UTILITIES BE ENCOUNTERED DURING EXCAVATION, CONSULT THE UTILITY OWNER AND ENGINEER IMMEDIATELY FOR DIRECTIONS. COOPERATE WITH THE ENGINEER AND UTILITY OWNER IN KEEPING RESPECTIVE FACILITIES IN OPERATION. THE CONTRACTOR SHALL REPAIR DAMAGED UTILITIES TO SATISFACTION OF THE UTILITY OWNER.
4. DO NOT INTERRUPT EXISTING UTILITIES SERVING OCCUPIED FACILITIES, EXCEPT WHEN PERMITTED IN WRITING BY THE OWNER AND ENGINEER AND THEN ONLY AFTER ACCEPTABLE TEMPORARY UTILITY SERVICES HAVE BEEN PROVIDED.
5. EXISTING SITE ACCESS DRIVES SHALL BE MAINTAINED AT ALL TIMES EXCEPT WHEN PERMITTED IN WRITING BY THE CURRENT OWNER AND OLIN.
6. BITUMINOUS PAVEMENT SHALL BE DEMOLISHED AND REMOVED FROM EXCAVATION/TRENCHING AREAS AND PROPERLY DISPOSED OFFSITE. PAVEMENT SHALL BE SAW CUT AT LIMITS OF REMOVAL.
7. EXISTING BITUMINOUS PAVEMENT, LAWN, FENCING AND ANY OTHER FEATURES DISTURBED BY THE WORK SHALL BE RESTORED TO EXISTING CONDITIONS UPON COMPLETION OF THE WORK.
8. SOURCE OF BASE MAP: EXISTING CONDITIONS & SPOT ELEVATIONS SHOWN ON THE DRAWINGS ARE THE RESULT OF AN ON THE GROUND SURVEY PERFORMED BY DANA F. PERKINS, INC. ON JUNE 27 & 29, 2005.

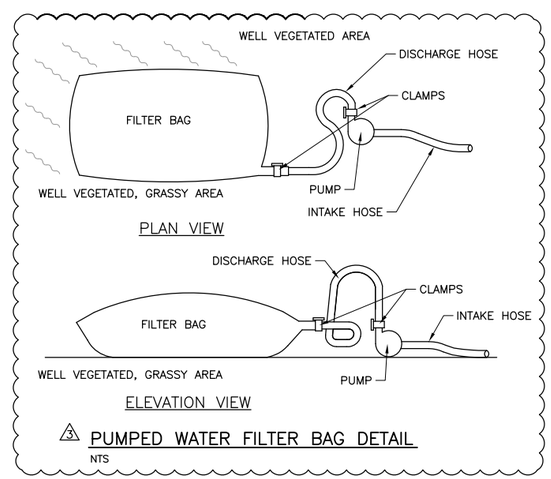

3 PUMPED WATER FILTER BAG DETAIL
NTS

1 MOVED PIPE SLEEVES UNDER RAILROAD DETAIL TO C–202

0 25 50 100
HORIZONTAL SCALE IN FEET

0 2.5 5 10
VERTICAL SCALE IN FEET

This drawing is the property of MACTEC Engineering and Consulting, Inc. including all patented and patentable features, and/or confidential information and its use is conditioned upon the users agreement not to reproduce the drawing, in whole or part, nor the material described thereon, nor the use of the drawing for any purpose other than specifically permitted in writing by MACTEC Engineering and Consulting, Inc.

NO.	DATE	REVISIONS	BY	CHK
3	04/05/11	ADDRESSED TOWN OF WILMINGTON COMMENTS	REO	MAP
2	03/09/11	ISSUED FOR CONSTRUCTION	REO	MAP
1	02/12/10	FINAL	REO	MAP
0	12/07/09	ISSUED FOR BID	REO	MAP
A	11/12/09	FOR CLIENT REVIEW	REO	MAP

DRAWN: MRS	PROJECT NO: 6107–10–0016
ENGINEER: MAP	SCALE: AS NOTED
CHECKED: REO	APPROVED: PHT
DATE: 03/09/11	DATE: 03/09/11

MACTEC
Engineering and Consulting, Inc.
P.O. Box 7050, 511 Congress Street
Portland, ME 04112–7050
(207) 775–5401

DAPL EXTRACTION PILOT TEST
OLIN CHEMICAL SUPERFUND SITE
WILMINGTON, MASSACHUSETTS

CIVIL

PROPOSED PIPING PROFILE

DRAWING NO: C–201
3 / 15

P:\Projects\CADD–PORT\Projects\OLIN–Wilmington\C–201.dwg Wed, 22 Aug 2012 – 3:05pm dsid:lawrence

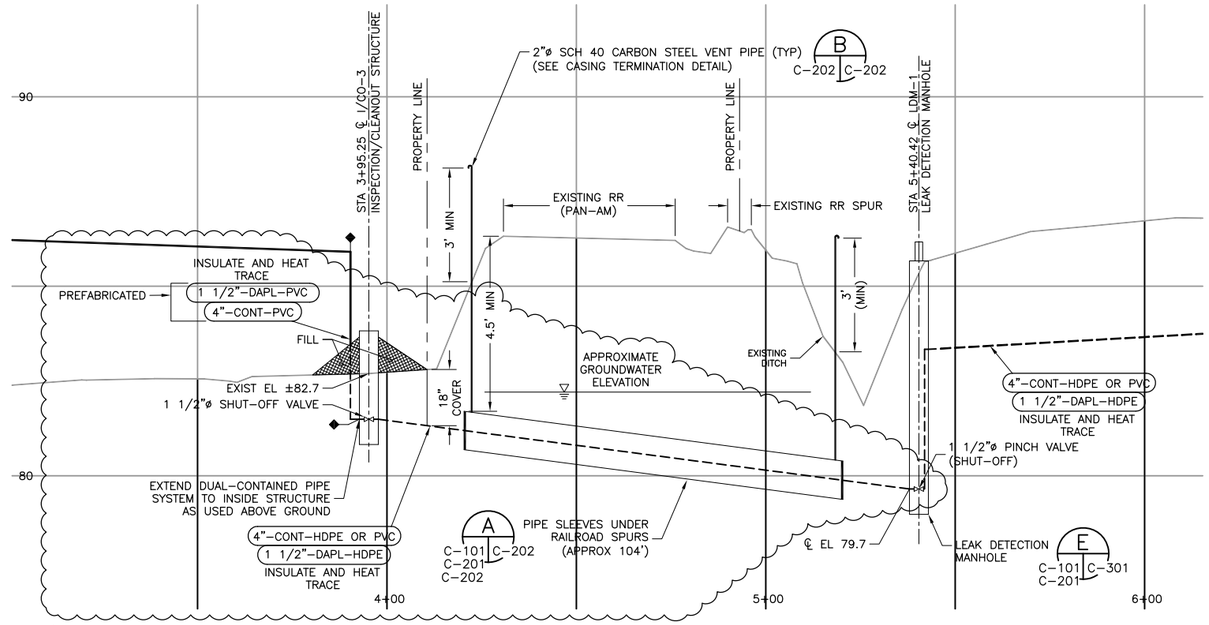

PROPOSED PROFILE PIPE SLEEVE UNDER RAILROAD SPURS

0 10 20 40 HORIZONTAL SCALE IN FEET

0 1 2 4 VERTICAL SCALE IN FEET

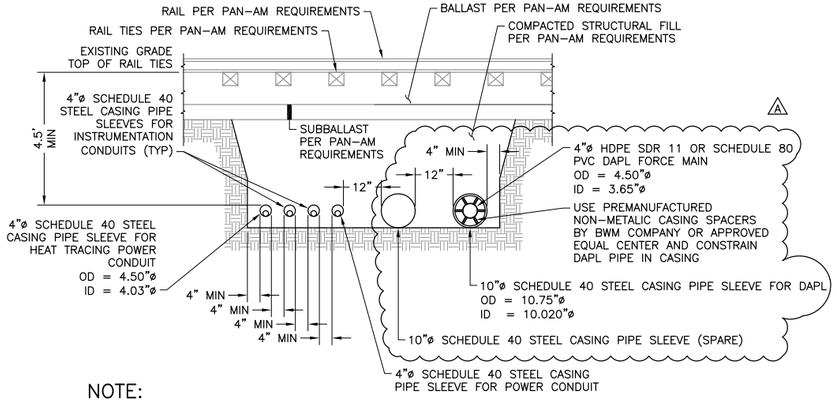

NOTE:

1. RAILROAD WORK SHALL BE CONDUCTED BY AN APPROVED PAN-AM SUBCONTRACTOR HIRED BY THE CONTRACTOR. THE CONTRACTOR SHALL PROVIDE PIPING AND CONDUIT MATERIALS, INCLUDING CASING PIPE, AND COORDINATE PIPE INSTALLATION WITH THE PAN-AM APPROVED SUBCONTRACTOR.
2. CASING PIPE SHALL EXTEND A MINIMUM OF 25' FROM CENTERLINE OF OUTSIDE RAIL LINE.

PIPE SLEEVES UNDER RAILROAD SPURS

NTS

A
C-101 C-202

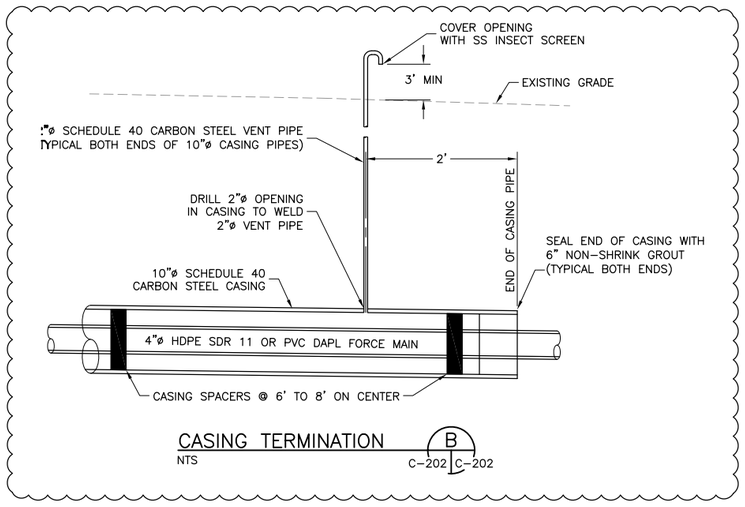

CASING TERMINATION

NTS

B
C-202 C-202

NOTES:

1. FOR PIPING ELEVATIONS AT STRUCTURES, SEE DRAWING C-301.

RAILROAD UTILITY CROSSING NOTES:

1. THE RAILROAD WORK AREA IS PART OF THE WOBURN LOOP IS CONSIDERED AN ACTIVE TRACK AND THEREFORE A POTENTIALLY HAZARDOUS WORK AREA. ALL WORK MUST BE COORDINATED WITH PAN AM RAILWAY FOR TRAIN MOVEMENTS. REPRESENTATIVES FOR THE CONTRACTOR, OLIN, MACTEC, USEPA, MADEP, AND SUBCONTRACTORS MUST BE ACCOMPANIED BY A RAILROAD FLAGMAN/INSPECTOR PER FEDERAL RAILROAD ADMINISTRATION REGULATIONS AND PAN AM SPECIFICATIONS.
2. ANY WORK ACTIVITIES THAT AFFECT THE PAN AM RAILWAY RIGHT-OF-WAY (ROW) AND/OR OPERATIONS DURING THIS PROJECT WILL REQUIRE PRIOR PAN AM APPROVAL AND THE PRESENCE OF A RAILROAD FLAGMAN/INSPECTOR.
3. THE CONTRACTOR WILL BE REQUIRED TO SUBMIT A PIPING INSTALLATION PROCEDURE TO PAN AM RAILWAY DETAILING THE MATERIALS AND METHODS OF CONSTRUCTION TO BE UTILIZED DURING THE RAILROAD UTILITY CROSSING WORK AFFECTING THE PAN AM ROW. ADDITIONALLY, THE CONTRACTOR MUST EXECUTE A STANDARD RAILROAD SERVICE CONTRACT OR PROPERTY ACCESS AND INDEMNIFICATION AGREEMENT AND PROVIDE AN ACCEPTABLE RAILROAD-PROTECTIVE INSURANCE POLICY TO THE PAN AM RAILWAY REAL ESTATE DEPARTMENT.
4. THE PROPOSED PIPE CROSSING WORK WILL IMPACT EXISTING FREIGHT SERVICE OPERATIONS FOR THE GLEN FALLS SAND & GRAVEL FACILITY. THE PAN AM RAILWAY TRANSPORTATION DEPARTMENT WILL BE REQUIRED TO APPROVE THE TRACK OUTAGE REQUIRED TO ACCOMMODATE THE INSTALLATION WORK AND ISSUE A SAFETY BULLETIN TO RAILROAD PERSONNEL AND GLEN FALLS EMPLOYEES OF THE RESTRICTED FREIGHT OPERATION LIMITS AND OTHER POTENTIAL HAZARDS DURING THE PROJECT. THE CONTRACTOR SHALL PROVIDE AN ESTIMATED SCHEDULE PROVIDING DATES AND DURATION TO CONDUCT THE PIPE CROSSING WITH THE PIPING INSTALLATION PROCEDURE.
5. THE PROPOSED UTILITY CROSSING WILL BE INSTALLED VIA OPEN CUT AND DIRECT BURY PROCEDURES. PAN AM RAILROAD FORCES OR A PAN AM APPROVED SUBCONTRACTOR WILL BE REQUIRED TO CONSTRUCT THE RAILROAD WORK, INCLUDING REMOVAL AND REPLACEMENT OF RAIL, TIES, AND BALLAST STONE THROUGHOUT THE RAILROAD UTILITY CROSSING WORK AREA.
6. THE PIPE SLEEVES OR CASING PIPE SHALL BE STEEL PIPE CONFORMING TO ASTM A 53 OR API SPEC 5L, GRADE B (35,000 PSI MINIMUM YIELD STRESS), TYPE E OR S, SCHEDULE 40 BLACK STEEL PIPE.
   - 10-INCH, SCHEDULE 40, WALL THICKNESS = 0.365 INCHES.
   - 4-INCH, SCHEDULE 40, WALL THICKNESS = 0.237 INCHES
7. AS INDICATED SHUT-OFF VALVES WILL BE INSTALLED ON THE DAPL DISCHARGE PIPE IN BOTH THE LEAK DETECTION MANHOLE AND INSPECTION/CLEANOUT STRUCTURE I/CO-3 LOCATED AT BOTH ENDS OF THE PIPELINE CROSSING.
8. BOTH ENDS OF THE PIPE SLEEVE OR CASING PIPE CARRYING THE DAPL PIPING SHALL BE PROVIDED WITH CASING SEALS AND VENTS AS INDICATED.
9. THE DAPL PIPE SHALL BE CENTERED WITHIN THE PIPE SLEEVE OR CASING PIPE USING PRE-MANUFACTURED NON-METALLIC CASING SPACERS. THE SPACERS SHALL BE LOCATED AT 6 TO 8 FEET ON CENTERED ALONG THE ENTIRE PIPE CASING LENGTH.
10. EXCAVATION AND BACKFILL ACTIVITIES MUST BE PERFORMED IN CONFORMANCE WITH APPLICABLE PAN AM RAILWAY SPECIFICATIONS AND AS OUTLINED HEREIN:
    - ESTIMATED GROUNDWATER LEVELS INDICATE THAT THE PIPING INSTALLATION IS EXPECTED TO OCCUR SEVERAL FEET BELOW THE GROUNDWATER ELEVATION. THE CONTRACTOR SHALL PROVIDE ADEQUATE DEWATERING FACILITIES TO MAINTAIN EXCAVATED AREAS SUFFICIENTLY DRY FROM GROUNDWATER AND/OR SURFACE WATER RUNOFF TO ALLOW PROPER BACKFILL AND COMPACTION AND THAT WILL NOT ADVERSELY AFFECT CONSTRUCTION PROCEDURES NOR CAUSE EXCESSIVE DISTURBANCE OF UNDERLYING NATURAL GROUND. THE DRAINAGE OF ALL WATER RESULTING FROM PUMPING SHALL BE MANAGED SO AS NOT TO CAUSE PHYSICAL OR ENVIRONMENTAL DAMAGE TO ADJACENT AREAS. PUMPING SHALL BE CONTINUOUS, AS REQUIRED, TO PROTECT THE WORK AND/OR TO MAINTAIN SATISFACTORY PROGRESS IN THE WORK. SEE PUMPED WATER FILTER BAG DETAIL ON DRAWING C-201.
    - THE TRENCH SHALL BE BACKFILLED WITH STRUCTURAL FILL CONSISTING OF GRAVEL BORROW MEETING THE REQUIREMENTS OF MASSHIGHWAY SPECIFICATION SECTION M1.03.0 TYPE A, B, OR C. IT SHALL BE OF SUCH A GRADATION AND MATERIAL THAT IT CAN BE COMPACTED TO THE MINIMUM SPECIFIED DRY DENSITY INDICATED BELOW.
    - TRENCH BACKFILL SHALL BE COMPACTED TO MINIMUM OF 95% MODIFIED PROCTER BASED ON AMERICAN ASSOCIATION OF STATE HIGHWAY AND TRANSPORTATION OFFICIALS (AASHTO) DESIGNATION T-180, OR ASTM D 1557. TRENCH BACKFILL MATERIAL SHALL BE PLACED IN A MAXIMUM 8-INCH LOOSE LIFTS. IN PLACE DENSITY AND MOISTURE TESTING PER ASTM D 6938 AT A MINIMUM RATE OF 2 TESTS PER LIFT SHALL BE TAKEN AND DOCUMENTED DURING THE WORK.
    - BALLAST STONE, TIES AND RAIL MATERIAL AND INSTALLATION SHALL BE CONDUCTED PER PAN AM RAILWAY REQUIREMENTS AND SPECIFICATIONS.

This drawing is the property of MACTEC Engineering and Consulting, Inc. including all patented and patentable features, and/or confidential information and its use is conditioned upon the users agreement not to reproduce the drawing, in whole or part, nor the material described thereon, nor the use of the drawing for any purpose other than specifically permitted in writing by MACTEC Engineering and Consulting, Inc.

NO.	DATE	REVISIONS	BY	CHK
2	02/14/12	REVISED DUE TO FIELD CONDITIONS	MAP	REO
1	04/05/11	ADDRESSED TOWN OF WILMINGTON COMMENTS	REO	MAP
0	03/09/11	ISSUED FOR CONSTRUCTION	REO	MAP
A	02/12/10	FINAL	REO	MAP

DRAWN: DEL	PROJECT NO: 6107-10-0016
ENGINEER: MAP	SCALE: AS NOTED
CHECKED: REO	APPROVED: PHT
DATE: 03/09/11	DATE: 03/09/11

MACTEC
Engineering and Consulting, Inc.
P.O. Box 7050, 511 Congress Street
Portland, ME 04112-7050
(207) 775-5401

DAPL EXTRACTION PILOT TEST
OLIN CHEMICAL SUPERFUND SITE
WILMINGTON, MASSACHUSETTS

CIVIL

PROPOSED PROFILE
PIPE SLEEVES UNDER RAILROAD SPURS
AND DETAILS

DRAWING NO: C-202

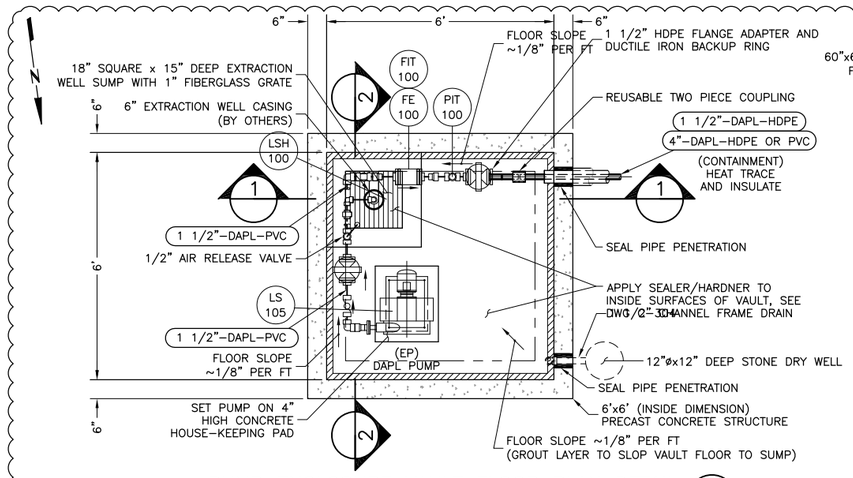

PUMP ENCLOSURE VAULT FLOOR PLAN DETAIL (A)
NTS
C-101 | C-301

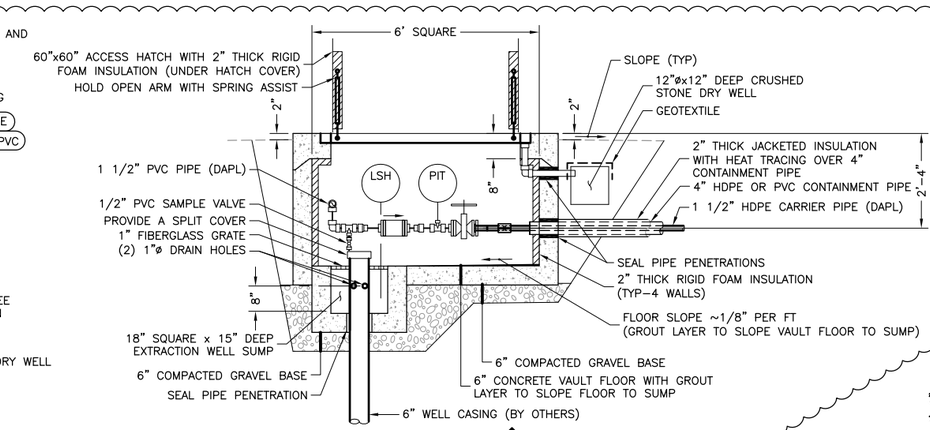

SECTION (1)
NTS

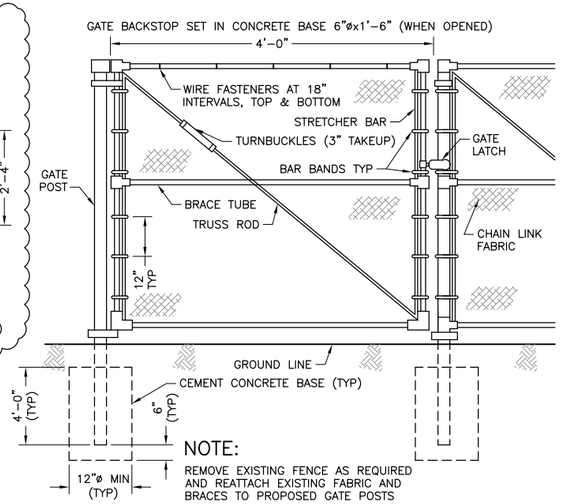

NOTE:
REMOVE EXISTING FENCE AS REQUIRED AND REATTACH EXISTING FABRIC AND BRACES TO PROPOSED GATE POSTS

CHAIN LINK FENCE WITH SINGLE (MAN) GATE DETAIL (B)
NTS
C-101 | C-301

FOR REVISIONS TO PUMP ENCLOSURE VAULT FLOOR PLAN DETAIL AND SECTIONS – SEE DRAWING FC1 (5)

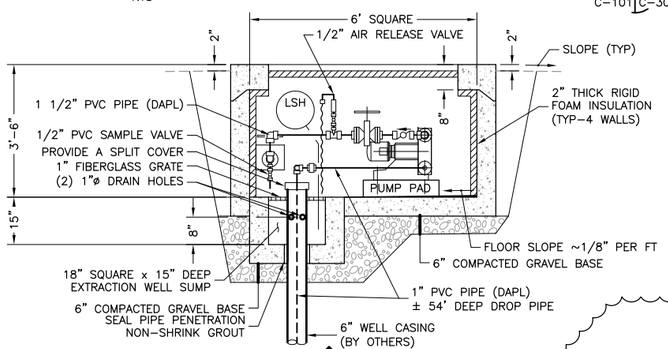

SECTION (2)
NTS

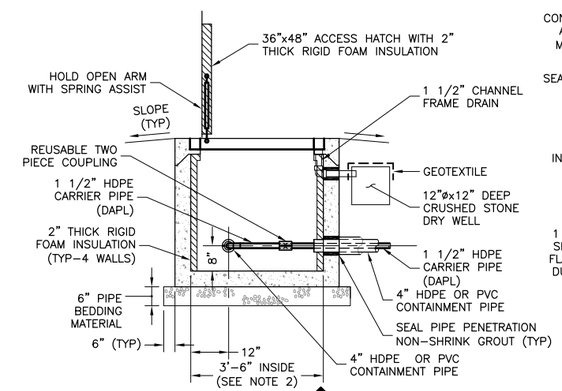

SECTION (3)
NTS

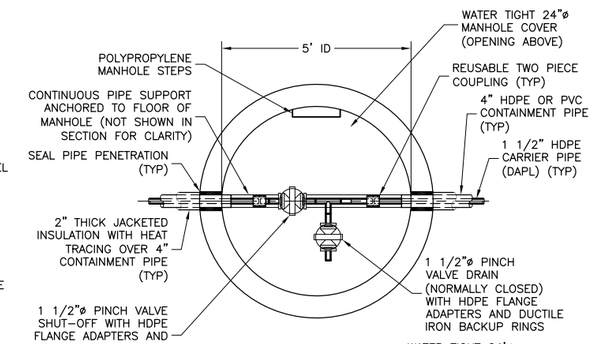

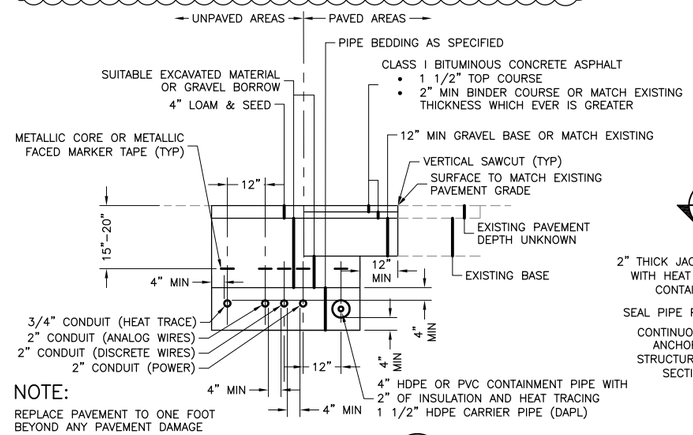

NOTE:
REPLACE PAVEMENT TO ONE FOOT BEYOND ANY PAVEMENT DAMAGE

UTILITY TRENCH (C)
NTS
C-101 | C-301

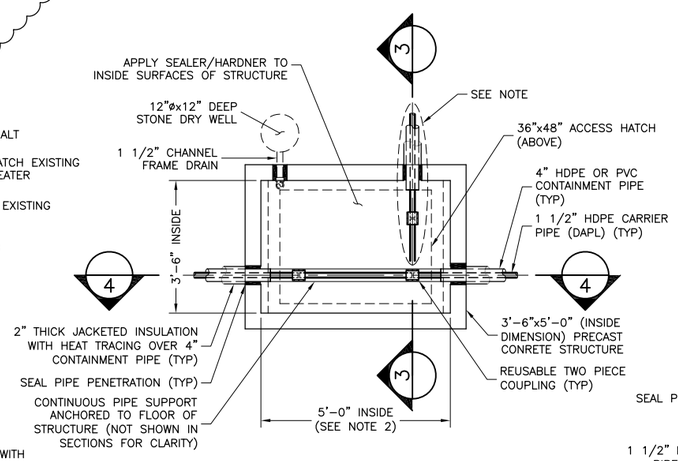

NOTE:
1. INSTALL 1 1/2" HDPE 90° ELBOW WHERE REQUIRED BY THE PIPING ORIENTATION.

(SEE PROPOSED SITE PLAN FOR PIPING ORIENTATION)
INSPECTION/CLEAN-OUT STRUCTURE DETAIL (D)
C-101 | C-301

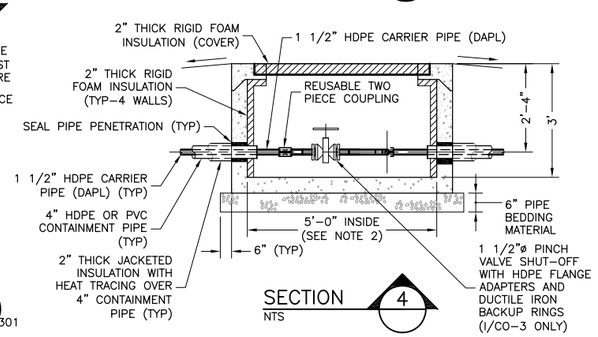

SECTION (4)
NTS

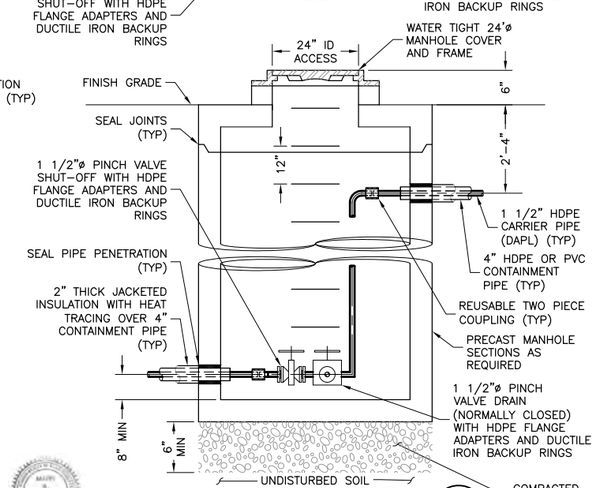

LEAK DETECTION MANHOLE (E)
NTS
C-101 | C-301

This drawing is the property of MACTEC Engineering and Consulting, Inc. including all patented and patentable features, and/or confidential information and its use is conditioned upon the users agreement not to reproduce the drawing, in whole or part, nor the material described thereon, nor the use of the drawing for any purpose other than specifically permitted in writing by MACTEC Engineering and Consulting, Inc.

NO.	DATE	REVISIONS	BY	CHK
5	05/15/12	REVISED VAULT	DEL	MAP
4	12/19/11	REVISED VAULT ORIENTATION FOR NEW EW LOCATION	REO	MAP
3	03/09/11	ADDRESSED TOWN OF WILMINGTON COMMENTS	REO	MAP
2	03/19/11	ISSUED FOR CONSTRUCTION	REO	MAP
1	02/12/10	FINAL	REO	MAP
0	12/07/09	ISSUED FOR BID	REO	MAP

DRAWN: DEL	PROJECT NO: 6107-10-0016
ENGINEER: MAP	SCALE: NONE
CHECKED: REO	APPROVED: PHT
DATE: 03/09/11	DATE: 03/09/11

MACTEC
Engineering and Consulting, Inc.
P.O. Box 7050, 511 Congress Street
Portland, ME 04112-7050
(207) 775-5401

DAPL EXTRACTION PILOT TEST
OLIN CHEMICAL SUPERFUND SITE
WILMINGTON, MASSACHUSETTS

CIVIL

CIVIL DETAILS

DRAWING NO: C-301

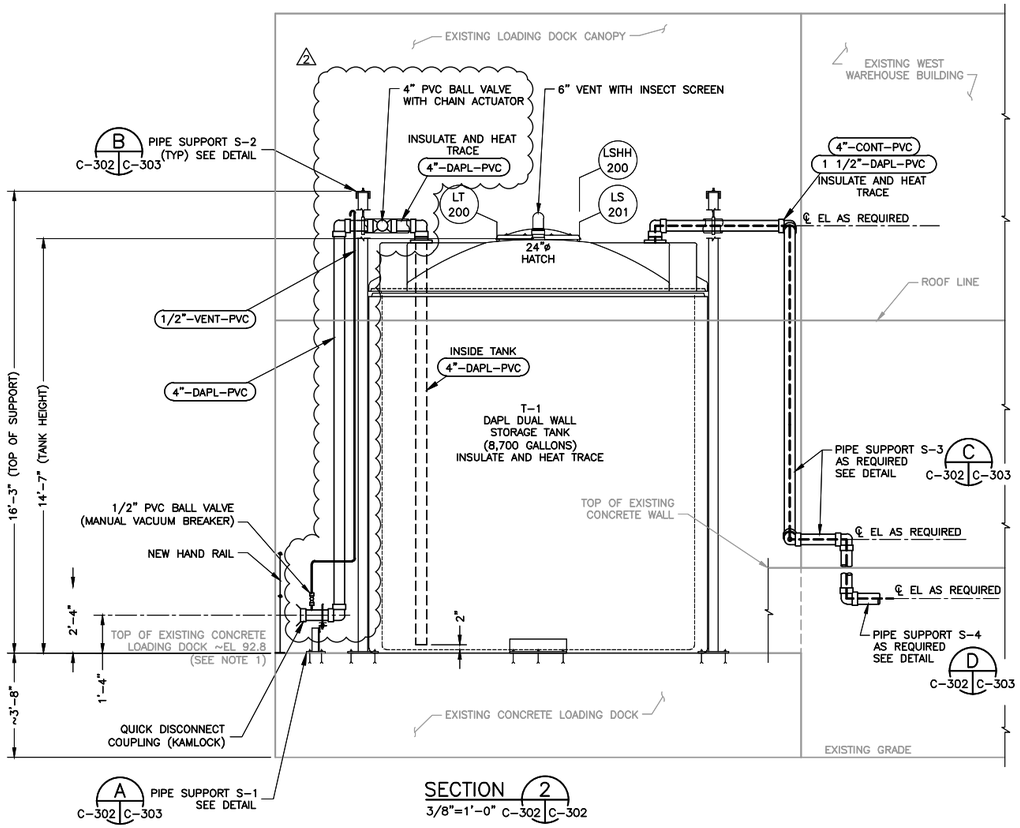

SECTION 2
3/8"=1'-0" C-302 C-302

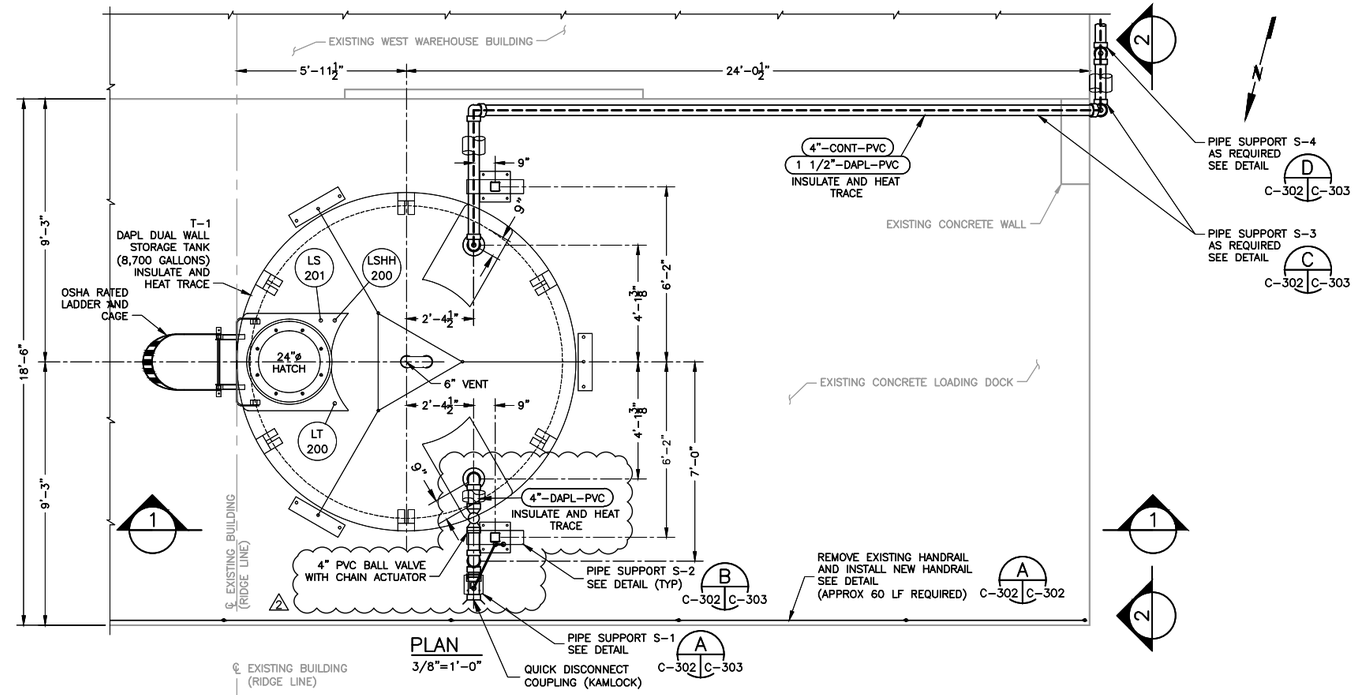

PLAN
3/8"=1'-0"

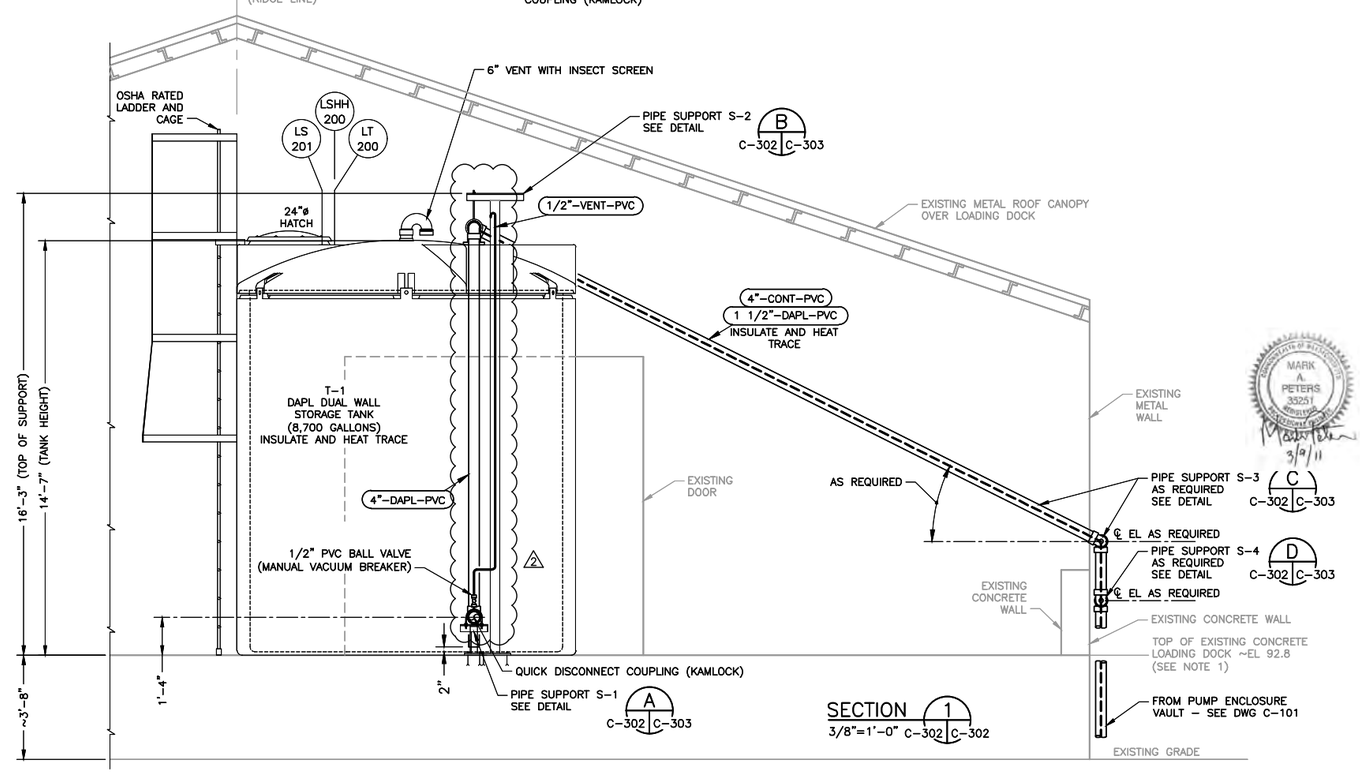

SECTION 1
3/8"=1'-0" C-302 C-302

HANDRAIL NOTES:

1. HANDRAIL MATERIAL:
   A. ALUMINUM: 6063-TS
   B. STEEL: ASTM A53 GRADE B
2. POSTS SHALL BE 1 1/2"ø NPS SCH 80 AND RAILS 1 1/2"ø NPS SCH 40 WELDED CONSTRUCTION WITH TYPE "A" MILL FINISH.
3. ALL SHARP CORNERS AND ROUGH EDGES TO BE GROUND SMOOTH AFTER FABRICATION.
4. WHERE PRACTICAL, RAILS TO BE DISCONTINUOUS AT CHANGES IN DIRECTION OR ELEVATION.
5. COAT CONTACT SURFACES OR DISSIMILAR MATERIALS WITH COAL TAR EPOXY. (ALUMINUM ONLY).
6. FINISH: ONE COAT LATEX PRIMER, ONE COAT LATEX FINISH TOP COAT (COLOR YELLOW).

NOTES:

1. TOP OF LOADING DOCK IS 3'-8" ABOVE ADJACENT ASPHALT DRIVE (APPROXIMATE ELEVATION 92.7). ACTUAL ELEVATIONS MAY BE FIELD ADJUSTED BASED ON ACTUAL ELEVATION DEVELOPED FROM SITE SUBGRADE PREPARATION. RELATED ELEVATIONS BETWEEN SITE FEATURES SHALL BE MAINTAINED AS APPROVED.
2. LAYOUT AND DIMENSIONS MAY BE FIELD ADJUSTED BASED ON ACTUAL TANKS AND EQUIPMENT USED AND AS APPROVED.

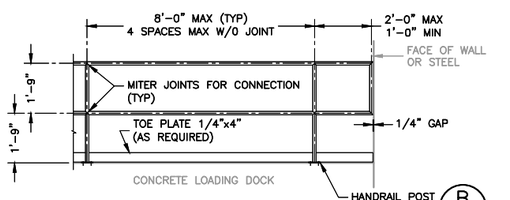

STANDARD HANDRAIL DETAIL A C-302 C-302
NTS

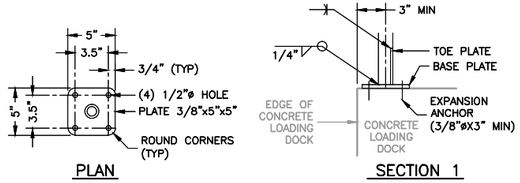

PLAN SECTION 1

HANDRAIL POST CONNECTION B C-302 C-302
NTS

2 0 2 4 6
SCALE OF FEET
3/8" = 1'-0"

This drawing is the property of MACTEC Engineering and Consulting, Inc. including all patented and patentable features, and/or confidential information and its use is conditioned upon the users agreement not to reproduce the drawing, in whole or part, nor the material described thereon, nor the use of the drawing for any purpose other than specifically permitted in writing by MACTEC Engineering and Consulting, Inc.

NO.	DATE	REVISIONS	BY	CHK
2	03/09/11	ISSUED FOR CONSTRUCTION	REO	MAP
1	02/12/10	FINAL	REO	MAP
0	12/07/09	ISSUED FOR BID	REO	MAP
A	11/12/09	FOR CLIENT REVIEW	REO	MAP

DRAWN: DEL	PROJECT NO: 6107-10-0016
ENGINEER: MAP	SCALE: NONE
CHECKED: REO	APPROVED: PHT
DATE: 03/09/11	DATE: 03/09/11

MACTEC
Engineering and Consulting, Inc.
P.O. Box 7050, 511 Congress Street
Portland, ME 04112-7050
(207) 775-5401

DAPL EXTRACTION PILOT TEST
OLIN CHEMICAL SUPERFUND SITE
WILMINGTON, MASSACHUSETTS

CIVIL

CIVIL DETAILS

DRAWING NO: C-302

6 / 15

M:\Projects\Olin-Wilmington\C-302.dwg Wed, 09 Mar 2011 - 11:38am mrobsky

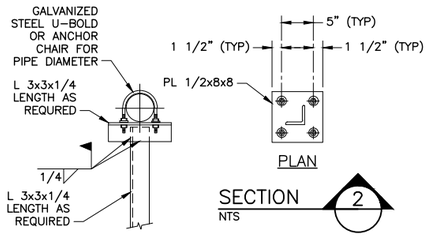

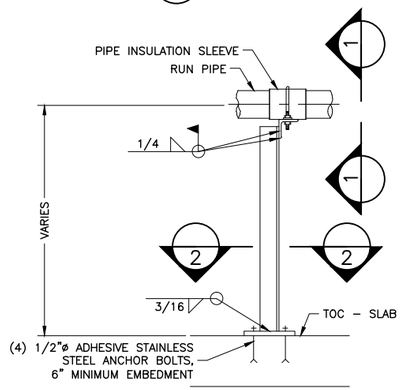

PIPE SUPPORT S–1 DETAIL (A) C–302 | C–303
NTS

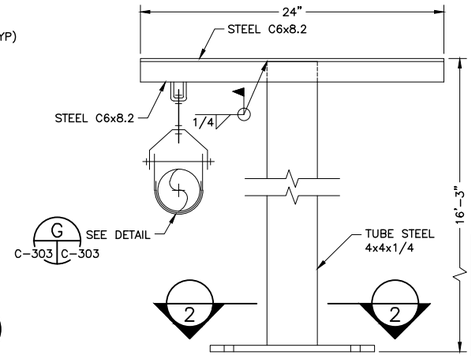

NOTE:

PIPE SUPPORT OPTION: SUPPORT ROD HANGER WITH CLEVIS HANGER FROM EXISTING BUILDING PURLINS, CONSULT ENGINEER FOR APPROVAL.

PIPE SUPPORT S–2 DETAIL (B) C–302 | C–303
NTS

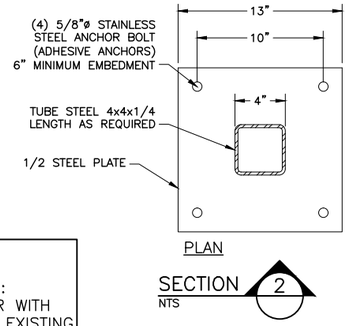

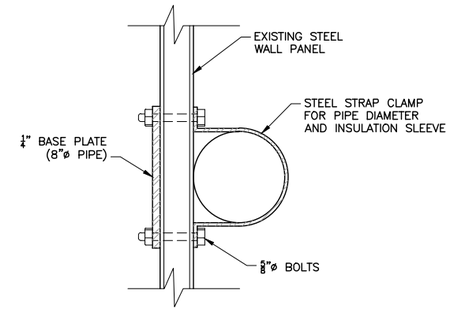

PIPE SUPPORT S–3 DETAIL (C) C–101 | C–303 C–302
NTS

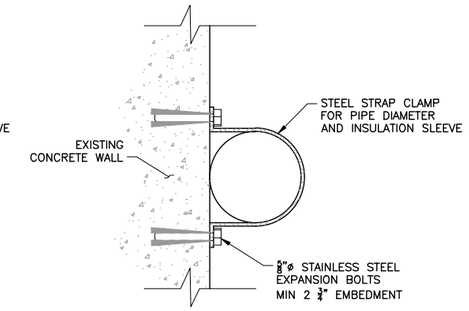

PIPE SUPPORT S–4 DETAIL (D) C–101 | C–303 C–302
NTS

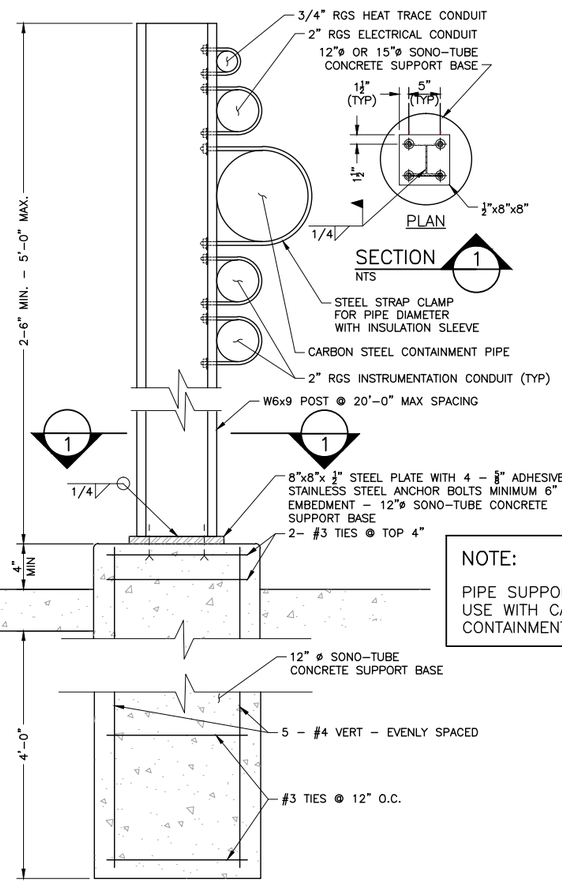

NOTE:

PIPE SUPPORT OPTION 1: FOR USE WITH CARBON STEEL CONTAINMENT PIPE OPTION 1.

PIPE SUPPORT S–5A DETAIL (E) C–101 | C–303 C–303
NTS

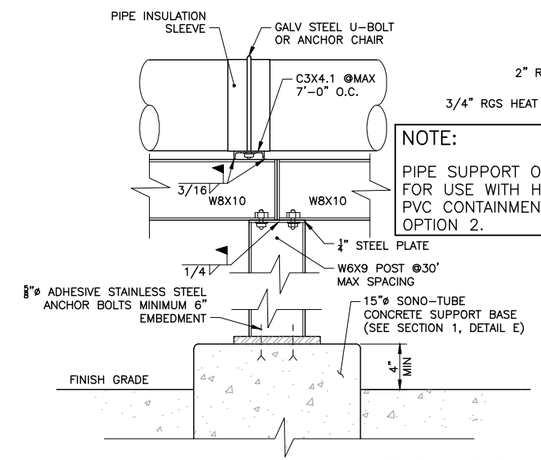

NOTE:

PIPE SUPPORT OPTION 2: FOR USE WITH HDPE OR PVC CONTAINMENT PIPE OPTION 2.

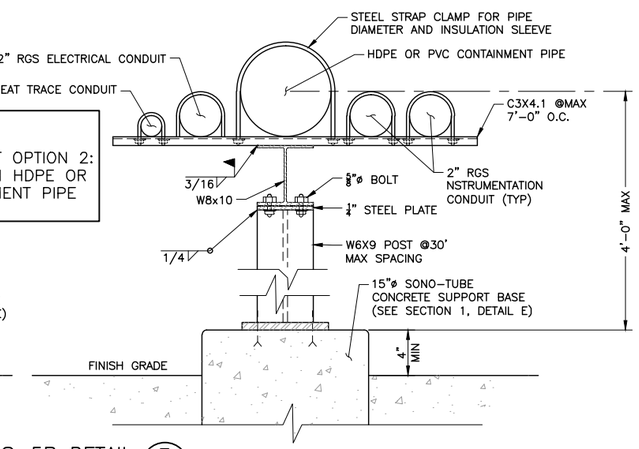

PIPE SUPPORT S–5B DETAIL (F) C–101 | C–303 C–302
NTS

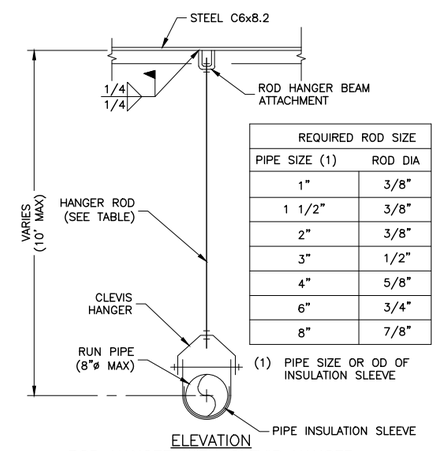

REQUIRED ROD SIZE	
PIPE SIZE (1)	ROD DIA
1"	3/8"
1 1/2"	3/8"
2"	3/8"
3"	1/2"
4"	5/8"
6"	3/4"
8"	7/8"

ROD HANGER WITH CLEVIS HANGER
PIPE SUPPORT S–2

DETAIL (G) C–303 | C–303
NTS

NOTE:

TIGHTEN ALL STEEL STRAP CLAMPS, ALLOWING FOR PIPE EXPANSION AND CONTRACTION – DO NOT OVER TIGHTEN.

This drawing is the property of MACTEC Engineering and Consulting, Inc. including all patented and patentable features, and/or confidential information and its use is conditioned upon the users agreement not to reproduce the drawing, in whole or part, nor the material described thereon, nor the use of the drawing for any purpose other than specifically permitted in writing by MACTEC Engineering and Consulting, Inc.

NO.	DATE	REVISIONS	BY	CHK
2	03/09/11	ISSUED FOR CONSTRUCTION	REO	MAP
1	02/12/10	FINAL	REO	MAP
0	12/07/09	ISSUED FOR BID	REO	MAP
A	11/12/09	FOR CLIENT REVIEW	REO	MAP

DRAWN: DEL	PROJECT NO: 6107–10–0016
ENGINEER: MAP	SCALE: NONE
CHECKED: REO	APPROVED: PHT
DATE: 03/09/11	DATE: 03/09/11

MACTEC
Engineering and Consulting, Inc.
P.O. Box 7050, 511 Congress Street
Portland, ME 04112–7050
(207) 775–5401

DAPL EXTRACTION PILOT TEST
OLIN CHEMICAL SUPERFUND SITE
WILMINGTON, MASSACHUSETTS

CIVIL

CIVIL DETAILS

DRAWING NO: C–303

CONSTRUCTION SPECIFICATIONS:

BACKFILL AND COMPACTION

1. GRAVEL BORROW AND GRAVEL BASE:
   - MATERIAL – GRAVEL BORROW FOR FILL LOCATIONS OR GRAVEL BASE CONSTRUCTION SHALL BE MASSHIGHWAY M1.03.0 GRAVEL BORROW TYPE A, B, C, OR D. MATERIAL SHALL BE FREE OF TRASH, ICE, SNOW, TREE STUMPS, AND OTHER UNSUITABLE AND DELETERIOUS MATERIALS. IT SHALL BE OF SUCH A NATURE AND CHARACTER THAT IT CAN BE COMPACTED TO THE MINIMUM SPECIFIED DRY DENSITY INDICATED BELOW.
   - PLACEMENT – MAXIMUM 12–INCH LIFTS
   - COMPACTION – FOR BACKFILL MATERIALS PLACED IN VEGETATED AREAS, COMPACT TO A MINIMUM DENSITY OF 92% (MEASURED AS A PERCENTAGE OF THE MAX. DRY DENSITY AS DETERMINED BY ASTM D 698). FOR BACKFILL MATERIALS PLACED IN TRAFFIC AREAS UNDER PAVEMENT OR GRAVEL SURFACE, COMPACT TO A MINIMUM DENSITY OF 98%. IN PLACE DENSITY MAY BE DETERMINED BY DENSITY TESTING CONDUCTED AT A FREQUENCY OF 1 TEST (ASTM D 6938 – NUCLEAR GAUGE) PER LIFT PER 600 SF OR PER 200 LF OF TRENCH (MINIMUM 2 TESTS PER LIFT).
   - SUBMITTALS – FOR EACH SOURCE OF GRAVEL BORROW SUBMIT TO THE ENGINEER A GRAIN SIZE ANALYSIS (ASTM D 422) AND A MOISTURE–DENSITY CURVE (STANDARD PROCTOR – ASTM D 698). FOR ALL SOIL MATERIALS FROM OFF–SITE SOURCES, PROVIDE CLEAN CERTIFICATION PER MEDEP RESIDENTIAL STANDARDS.

2. PIPE BEDDING:
   - MATERIAL – USE GRAVEL BORROW MATERIAL EXCEPT MAXIMUM STONE SIZE SHALL BE ½–INCH.
   - PLACEMENT – MAXIMUM 6–INCH LIFTS
   - COMPACTION – SEE GRAVEL BORROW AND GRAVEL BASE.
   - SUBMITTALS – FOR EACH SOURCE OF PIPE BEDDING SUBMIT TO THE ENGINEER A GRAIN SIZE ANALYSIS (ASTM D 422) AND A MOISTURE–DENSITY CURVE (STANDARD PROCTOR – ASTM D 698).

ASPHALT

1. PAVEMENT:
   - MATERIAL – MASSHIGHWAY M3.11.00 CLASS I BITUMINOUS CONCRETE TYPE I–1. SURFACE OR FINAL COURSE USE M3.11.03 TABLE A TOP COURSE, DENSE MIX OR SURFACE TREATMENT. BASE COURSE USE M3.11.03 TABLE A BASE COURSE, BINDER COURSE OR DENSE BINDER COURSE.
   - PLACEMENT – THE BITUMINOUS CONCRETE MIXTURE SHALL NOT BE PLACED WHENEVER THE SURFACE IS WET OR FROZEN OR WHEN THE TEMPERATURE IS OUTSIDE THE LIMITATIONS STATED IN MASSHIGHWAY SECTION 460, UNLESS THE CONTRACTOR HAS A COLD WEATHER PAVING PROCEDURE APPROVED BY THE ENGINEER. THE CONTRACTOR SHALL BE RESPONSIBLE FOR SUBMITTING THE PROCEDURE AT LEAST ONE WEEK IN ADVANCE OF ANY PAVING OPERATIONS THAT MAY RESULT IN PLACEMENT OF THE BITUMINOUS CONCRETE PAVEMENT OUTSIDE OF THE TEMPERATURE LIMITATIONS STATED IN HIGHWAY SECTION 460. THE BITUMINOUS CONCRETE PAVEMENT SHALL BE PLACED IN TWO LIFTS (BINDER AND TOP COURSES). A THIN UNIFORM TACK COAT SHALL BE APPLIED PRIOR TO PLACEMENT OF THE TOP COURSE.
   - COMPACTION – NO COMPACTION TESTING IS REQUIRED, BUT THE BITUMINOUS CONCRETE PAVEMENT SHALL BE COMPACTED TO A SMOOTH FIRM FINISH AS DETERMINED BY CONTINUOUS OBSERVATION BY THE CONTRACTOR AND ENGINEER
   - SUBMITTALS – SUBMIT TO THE ENGINEER A JOB MIX FORMULA FOR EACH BITUMINOUS CONCRETE CLASS USED.

STRUCTURAL STEEL

1. PIPE SUPPORTS:
   - STEEL – ASTM A36, ASTM A 500 AND/OR ASTM A 501
   - WELDS SHALL BE E70XX. IN ACCORDANCE WITH AWS D1.1
   - ANCHOR BOLTS – ADHESIVE ANCHORS, STAINLESS STEEL, ASTM A 307
   - FINISH – ONE COAT LATEX PRIMER AND TWO COATS LATEX FINISH TOP COAT (COLOR GRAY). PREPARATION OF SURFACE SHALL BE IN ACCORDANCE WITH SSPC SP–2, SP–3, SP–6, OR SP–7 AS REQUIRED FOR SURFACE CONDITION OF STEEL.

CAST–IN–PLACE CONCRETE

1. MIX:
   - STRENGTH – MINIMUM 4000 PSI 28–DAY COMPRESSIVE STRENGTH.
   - WATER/CEMENT RATIO – MINIMUM 0.45.
   - SLUMP – 3 (±1) INCHES. MAXIMUM SLUMP MAY BE INCREASED ONE INCH FOR METHODS OF CONSOLIDATION OTHER THAN VIBRATION. SLUMP MAY BE INCREASED TO 7 INCHES WHEN SUPERPLASTICIZERS ARE USED
   - AIR ENTRAINMENT – 4 (±1.5) PERCENT. PROVIDE AIR ENTRAINMENT USING AIR–ENTRAINING ADMIXTURE
   - COARSE AGGREGATE – MAXIMUM NOMINAL AGGREGATE SIZE OF 1–1/2 INCHES (ASTM C 33 SIZE 57.
   - SUBMITTALS – . CONCRETE MIX DESIGN – TEN DAYS MINIMUM PRIOR TO CONCRETE PLACEMENT, SUBMIT A MIX DESIGN FOR EACH STRENGTH AND TYPE OF CONCRETE. SUBMIT A COMPLETE LIST OF MATERIALS INCLUDING TYPE; BRAND; SOURCE AND AMOUNT OF CEMENT, FLY ASH, POZZOLANS, GROUND SLAG, AND ADMIXTURES; AND APPLICABLE REFERENCE SPECIFICATIONS.

2. CEMENT:
   * ASTM C 150, TYPE I OR II OR ASTM C 595, TYPE IP(MS) OR IS(MS) BLENDED CEMENT EXCEPT AS MODIFIED HEREIN. THE BLENDED CEMENT SHALL CONSIST OF A MIXTURE OF ASTM C 150, TYPE II, CEMENT AND ONE OF THE FOLLOWING MATERIALS: ASTM C 618 POZZOLAN OR FLY ASH, ASTM C 989 GROUND IRON BLAST–FURNACE SLAG. THE POZZOLAN OR FLY ASH CONTENT SHALL NOT EXCEED 25 PERCENT BY WEIGHT OF THE TOTAL CEMENTITIOUS MATERIAL. THE GROUND IRON BLAST–FURNACE SLAG SHALL NOT EXCEED 50 PERCENT BY WEIGHT OF TOTAL CEMENTITIOUS MATERIAL. FOR EXPOSED CONCRETE, USE ONE MANUFACTURER FOR EACH TYPE OF CEMENT, GROUND SLAG, FLY ASH, AND POZZOLAN.

3. REINFORCEMENT:
   * REINFORCING BARS: ACI 301 UNLESS OTHERWISE SPECIFIED. ASTM A 615 WITH THE BARS MARKED A, S, W, GRADE 60; OR ASTM A 996 WITH THE BARS MARKED R, GRADE 60
   * WELDED WIRE FABRIC: ASTM A 185 OR ASTM A 497. PROVIDE FLAT SHEETS OF WELDED WIRE FABRIC FOR SLABS AND TOPPINGS.

4. SEALER/HARDENER:
   * APPLY SEALER TO PUMP ENCLOSURE VAULT FLOOR AND SUMP SURFACES, SEALANT SHALL CONSIST OF A PENETRATING, PERMANENT SEALER PROVIDING CHEMICAL AND ACID RESISTANCE. USE MOXIE 1500 BY MOXIE INTERNATIONAL, DURO–NOX BY NOX CRETEö, OR APPROVED EQUAL.

TOPSOIL AND VEGETATION

1. TOPSOIL:
   - MATERIAL – STRIP AND REUSE EXISTING TOPSOIL. IF ADDITIONAL TOPSOIL IS REQUIRED, OFFSITE MATERIAL SHALL BE A LOCAL WELL–GRADED TOPSOIL OR LOAM MATERIAL SUITABLE FOR THE FORMATION OF A SEED BED, SEED GERMINATION AND PLANT GROWTH.
   - PLACEMENT – ONE 4–INCH LIFT.
   - COMPACTION – LIGHTLY COMPACT USING A HAND TAMPER..

2. VEGETATION:
   - SEED MIX – BRAND NAME LAWN MIX SUITABLE FOR SUN OR SHADE CONDITIONS.
   - PLACEMENT – PER VENDOR INSTRUCTIONS OR A MINIMUM OF 1.5 LB. PER 1000 SQUARE FEET.
   - SUBMITTALS – VENDOR INFORMATION INCLUDING SPECIES PRESENT IN THE SEED MIX, GERMINATION AND PURITY.

INSPECTION/CLEAN–OUT STRUCTURE:

1. PRECAST CONCRETE STRUCTURE:
   - INSPECTION/CLEANOUT MANHOLES SHALL BE 3'–6" WIDE X 5'–0" LONG AND 3'–0" DEEP (INSIDE DIMENSIONS) PRECAST CONCRETE STRUCTURES. MANHOLE SHALL BE MANUFACTURED IN ACCORDANCE WITH ASTM C 478 FOR H–20 LOADING WITH CONCRETE DESIGNED TO OBTAIN A MINIMUM COMPRESSIVE STRENGTH OF 4,000 PSI AFTER 28 DAYS.
   - INSULATION: INSULATE SIDEWALLS WITH EXPANDED POLYSTYRENE (EPS) RIGID FOAM INSULATION.

2. ACCESS HATCHWAY:
   - HEAVY DUTY SINGLE LEAF CONSTRUCTION SHALL BE OF ¼" THICK DIAMOND PATTERN ALUMINUM PLATE. USE HALLIDAY PRODUCTS, MODEL NO. H1W3648 OR APPROVED EQUAL.
   - LOAD RATING: MINIMUM H–20 LOADING.
   - FRAME: EXTRUDED ALUMINUM FRAME CHANNEL FRAME.
   - ALL HARDWARE INCLUDING LATCHES, LIFTING MECHANISM ASSEMBLIES, GUIDES, BRACKETS, HINGES, PINS, HOLD OPEN ARMS, RELEASE HANDLE, AND GUIDES SHALL BE MADE OF 316 SS.
   - TAMPER PROOF HINGES SHALL BE ACCESSIBLE ONLY WHEN THE ACCESS DOOR IS IN THE OPEN POSITION.
   - PROVIDE A RECESSED LIFTING HANDLE AND NON–CORROSIVE PADLOCK BAR.
   - INSULATION: INSULATE COVER WITH EXPANDED POLYSTRENE (ESP) RIGID FOAM INSULATION.

3. SUBMITTALS: VENDOR SHOP DRAWINGS ON THE PRECAST CONCRETE VAULT, JOINTS, AND ACCESS HATCHWAY.

PUMP ENCLOSURE VAULT:

1. PRECAST CONCRETE STRUCTURE:
   - INSPECTION/CLEANOUT MANHOLES SHALL BE 6'–0" WIDE X 6'–0" LONG AND 3'–6" DEEP (INSIDE DIMENSIONS) PRECAST CONCRETE STRUCTURES. MANHOLE SHALL BE MANUFACTURED IN ACCORDANCE WITH ASTM C 478 FOR H–20 LOADING WITH CONCRETE DESIGNED TO OBTAIN A MINIMUM COMPRESSIVE STRENGTH OF 4,000 PSI AFTER 28 DAYS.
   - INSULATION: INSULATE SIDEWALLS WITH EXPANDED POLYSTYRENE (EPS) RIGID FOAM INSULATION.

2. ACCESS HATCHWAY:
   - HEAVY DUTY DOUBLE LEAF CONSTRUCTION SHALL BE OF ¼" THICK DIAMOND PATTERN ALUMINUM PLATE. USE HALLIDAY PRODUCTS, MODEL NO. H2W6060 OR APPROVED EQUAL.
   - LOAD RATING: MINIMUM H–20 LOADING.
   - FRAME: EXTRUDED ALUMINUM FRAME CHANNEL FRAME.
   - ALL HARDWARE INCLUDING LATCHES, LIFTING MECHANISM ASSEMBLIES, GUIDES, BRACKETS, HINGES, PINS, HOLD OPEN ARMS, RELEASE HANDLE, AND GUIDES SHALL BE MADE OF 316 SS.
   - TAMPER PROOF HINGES SHALL BE ACCESSIBLE ONLY WHEN THE ACCESS DOOR IS IN THE OPEN POSITION.
   - PROVIDE A RECESSED LIFTING HANDLE AND NON–CORROSIVE PADLOCK BAR.
   - INSULATION: INSULATE COVER WITH EXPANDED POLYSTRENE (ESP) RIGID FOAM INSULATION.

3. SUBMITTALS: VENDOR SHOP DRAWINGS ON THE PRECAST CONCRETE VAULT, JOINTS, AND ACCESS HATCHWAY.

LEAK DETECTION MANHOLE:

1. PRECAST CONCRETE MANHOLE: 5–FOOT DIAMETER (INSIDE DIMENSION) PRECAST CONCRETE MANHOLE STRUCTURE. MANHOLE SHALL BE MANUFACTURED IN ACCORDANCE WITH ASTM C–478 WITH CONCRETE DESIGNED FOR A MINIMUM 5000 PSI 28–DAY COMPRESSIVE STRENGTH. SHIPLAP JOINTS BETWEEN RISERS AND COVER SHALL BE SEALED TO PROVIDE A WATER–TIGHT JOINT WITH O–RING GASKET OR A MINIMUM 1–INCH STRIP OF BUTYL RUBBER SEALANT.

2. FRAME AND COVER: HEAVY DUTY CAST IRON IN ACCORDANCE WITH ASTM A–48, CLASS 35B GRAY IRON. PROVIDE WATER–TIGHT FRAME WITH NEOPRENE GASKET AND TYPE D STRAP IRON FASTENING DEVICE SUITABLE FOR LOCKING WITH PADLOCK. PROVIDE NEENAH FOUNDRY CATALOG NO. R–1916–F OR APPROVED EQUAL.

3. MANHOLE STEPS: POLYPROPYLENE PLASTIC MANHOLE STEPS AT 12–INCHES ON CENTER.

4. SUBMITTALS: VENDOR SHOP DRAWINGS ON THE MANHOLE, JOINTS, STEPS, FRAME AND COVER.

DAPL STORAGE TANK

1. TANK
   - WALL THICKNESS CALCULATED BASED ON A SPECIFIC GRAVITY OF 1.10 AND A HOOP STRESS OF 600 PSI @ 100°F, USING ASTM D 1998 REQUIREMENTS.
   - ROTATIONALLY–MOLDED, HIGH DENSITY CROSS–LINKED POLYETHYLENE, DOUBLE WALL, FLAT BOTTOM TANKS WITH AN OXIDATION RESISTANT LINER SYSTEM.
   - EACH ASSEMBLY SHALL CONSIST OF A CYLINDRICAL, CLOSED TOP INNER PRIMARY TANK WITH A CAPACITY OF 8,700 GALLONS AND A CYLINDRICAL, OPEN TOP OUTER CONTAINMENT TANK.
   - ONE–PIECE SEAMLESS CONSTRUCTION.
   - DESIGN TO PREVENT RAINWATER FROM ENTERING THE CONTAINMENT TANK.
   - COVER DESIGNED WITH THICKNESS EQUAL TO THE THICKNESS OF THE TOP OF THE STRAIGHT SIDEWALL WITH AT LEAST 3 FLAT AREAS.
   - PROVIDE AT LEAST 3 LIFTING LUGS AND 3 CONCRETE SLAB ATTACHMENT LUGS.
   - OSHA DESIGNED FIBERGLASS LADDER WITH TANK AND SLAB ATTACHMENT HARDWARE WITH REQUIRED CAGES.
   - PROVIDE FITTINGS AND CONNECTIONS AS SHOWN ON THE DRAWINGS WITH EPDM GASKETS.
   - MINIMUM 24" DIAMETER MANWAY WITH AN EMERGENCY PRESSURE RELIEF DEVICE.
   - INTERNAL PIPING SHALL BE SUPPORTED FROM THE TANK WALL @ 6' MAXIMUM SPACING, AS MANUFACTURED BY POLY PROCESSING COMPANY, AND SHALL EXTEND TO WITHIN 2" OF TANK FLOOR.

2. LEVEL INDICATION
   - PROVIDE AN ULTRASONIC LEVEL TRANSMITTER SUITABLE FOR A NON–HAZARDOUS ENVIRONMENT.
   - DESIGNED FOR OUTSIDE LOCATIONS.
   - CAPABLE OF PROVIDING A 4–20 mA SIGNAL FOR REMOTE INDICATION (BY OTHERS).
   - POWER SUPPLY 110 VAC.

3. LEAK DETECTION
   - LEAK SENSOR SHALL BE A CAPACITIVE PROXIMITY SWITCH OF PP WITH A NEMA 4X RATING THAT OPERATES BETWEEN –13 AND 158°F.
   - POWERED BY 110 VAC.
   - SENSOR TO BE 34mm DIAMETER WITH VARIABLE SENSITIVITY ADJUSTMENT.
   - PROVIDE A LEAK DETECTION SYSTEM PANEL FOR EACH OF THE DAPL TANKS SUITABLE FOR MOUNTING NEAR THE TANK ON A STAND PROVIDED BY THE TANK MANUFACTURER.
   - PROVIDE CONTACTS IN THE PANEL FOR REMOTE TRANSMISSION OF THE ALARM.
   - TO BE INSTALLED BY MANUFACTURER BETWEEN THE INNER AND OUTER TANK WALLS.
   - CABLE AND TANK WALL PENETRATION ASSEMBLY TO BE PROVIDED BY MANUFACTURER.

4. HEATING SYSTEM
   - POWER SUPPLY 110 VAC
   - ALUMINUM HEAT TAPE TO BE SIZED TO PROVIDE A ΔT OF 60°F FROM AMBIENT TEMPERATURE (MINIMUM SIZE PER TANK 2100 WATTS).
   - HEAT TAPE TO BE SIZED AND INSTALLED IN FACTORY BY TANK MANUFACTURER, PRIOR TO INSTALLATION OF THE 2" POLYURETHANE INSULATION.
   - SUPPLY HEATING SYSTEM CONTROLLER MOUNTED ON THE EXTERIOR OF EACH TANK, RATED NEMA 4, SUITABLE FOR NON–HAZARDOUS LOCATIONS.
   - PROVIDE AN OVER TEMPERATURE THERMOSTAT SET AT 150°F.

5. SUBMITTALS – TANK, LEVEL TRANSMITTER, LEAK DETECTION, AND HEATING SYSTEM FOR MATERIALS, PRESSURE AND TEMPERATURE RATING, FUNCTION, AND OPERATION.

PIPING AND VALVES

1. BALL VALVES (PVC)
   - PVC SIZED TO MATCH THE PIPING SHOWN ON THE DRAWINGS, TRUE UNION DESIGN, FULL PORT, ABS HANDLE, EPDM O–RINGS AND SEALS, TEFLON RENEWABLE SEAT, RATED 150 PSI AT 75°F WITH FLANGED ENDS.
   - BALL VALVES SHALL BE CAPABLE OF OPERATION BETWEEN 30°F AND 140°F.
   - THE VALVE SHALL BE EQUAL TO DUO BLOC TRUE UNION BALL VALVES MADE BY ASAHI/AMERICA OR APPROVED EQUAL.

2. PINCH VALVES
   - THE PINCH VALVES SHALL BE OPEN FRAME, MECHANICAL PINCH TYPE WITH FLANGED ENDS ON THE BODY AND SLEEVE TRIM.
   - THE SLEEVE SHALL HAVE 100% PORT FOR THE ENTIRE LENGTH OF THE SLEEVE AND BE VISIBLE WHILE BEING PINCHED IN ALL POSITIONS.
   - THE SLEEVE TRIM SHALL BE ONE PIECE EPDM WITH INTEGRAL FLANGES RETAINED BY THE FLANGE BOLTS. TABS SHALL ATTACH THE SLEEVE TO THE PINCH BAR.
   - THE STEEL PINCH MECHANISM SHALL BE DOUBLE ACTING. CAST PARTS ARE NOT ACCEPTABLE.
   - NON–RISING STEM AND HANDWHEEL.
   - EQUAL TO SERIES 70 MANUFACTURED BY RED VALVE CO, CARNEGIE, PA.

3. CHECK VALVES
   - PVC SIZED TO MATCH THE PIPING SHOWN ON THE DESIGN DRAWINGS, WITH PVC BALL.
   - EPDM SEATS AND SEALS RATED AT 150 PSI AT A TEMPERATURE OF 100°F.
   - SOCKET WELD ENDS.
   - RATED FOR FULL VACUUM SERVICE.
   - EQUAL TO TRUE UNION BALL CHECK VALVES MADE BY ASAHI/AMERICA OR APPROVED EQUAL.

PIPE MATERIALS:

1. PUMP ENCLOSURE VAULT: SCHEDULE 80 PVC, SOCKET WELD PIPE.

2. UNDERGROUND PIPING:
   - CARRIER PIPE – HDPE DR 11, FUSED, IPS SIZED PIPE.
   - CONTAINMENT – SCHEDULE 40 PVC, SOCKET WELD PIPE OR HDPE DR 17, FUSED, IPS SIZED PIPE.

3. ABOVEGROUND (FIELD FABRICATED):
   - CARRIER – HDPE DR 11, FUSED, IPS SIZED PIPE.
   - CONTAINMENT OPTION 1 (USE WITH PIPE SUPPORT OPTION S–5A) – STEEL PIPE CONFORMING TO ASTM A 53/A 53M, GRADE A OR B, TYPE E OR S, SCHEDULE 80 BLACK STEEL PIPE; OR API SPEC 5L SEAMLESS OR ELECTRIC RESISTANCE WELDED, SCHEDULE 80, BLACK STEEL PIPE AS SPECIFIED IN ASME B31.8.
   - CONTAINMENT OPTION 2 (USE WITH PIPE SUPPORT OPTION S–5B). SCHEDULE 80 PVC, SOCKET WELD PIPE OR HDPE DR 11, FUSED, IPS SIZED PIPE.

4. ABOVEGROUND – PREFABRICATED DOUBLE CONTAINMENT SYSTEMS (PREFABRICATED)
   - CARRIER – SCHEDULE 80 PVC, SOCKET WELD PIPE. PIPE AND FITTINGS SHALL BE FACTORY MADE WITH CARRIER PIPE PERMANENTLY ATTACHED TO THE CONTAINMENT PIPE READY FOR FIELD SOLVENT WELDING OF THE DOUBLE WALLED PIPING.
   - CONTAINMENT PIPING – SCHEDULE 80 PVC, SOCKET WELD PIPE. PROVIDE FACTORY INSTALLED CENTRALIZERS. PROVIDE PVC STYLE B TERMINATION FITTING ON THE CONTAINMENT PIPE IN THE INSPECTION/CLEANOUT STRUCTURE. PREFABRICATED DOUBLE CONTAINMENT PIPING WHERE INDICATED ON THE DRAWINGS SHALL BE PREFABRICATED DOUBLE CONTAINMENT PIPING SYSTEM EQUAL TO GUARDIAN SYSTEM MANUFACTURED BY IPEX, INC. OR APPROVED EQUAL.

5. PIPE SLEEVES UNDER RAIL ROAD – STEEL PIPE CONFORMING TO ASTM A 53/A 53M, GRADE B, TYPE E OR S, SCHEDULE 40 BLACK STEEL PIPE; OR API SPEC 5L SEAMLESS OR ELECTRIC RESISTANCE WELDED, SCHEDULE 40, BLACK STEEL PIPE AS SPECIFIED IN ASME B31.8. (1)

6. PIPE TESTING – INSTALLED CARRIER PIPE SHALL BE PRESSURE TESTED AT 50 PSI FOR A 2 HOUR PERIOD WITH NO LEAKAGE. ANY LEAKAGE WILL BE REPAIRED AND RETESTED UNTIL NO LEAKAGE OCCURS DURING THE TEST PERIOD.

PIPE INSULATION:

1. PROVIDE ALUMINUM JACKET PROTECTIVE SLEEVES AT ALL SUPPORTS.

2. ABOVEGROUND PIPING
   - THE INSULATION SHALL BE 2" THICK FIBERGLASS PIPE INSULATION AND CONFORM TO ASTM C547, ASTM C1136, AND NFPA 90A.
   - THE INSULATION SHALL HAVE A MAXIMUM THERMAL CONDUCTIVITY (K) OF 0.22 BTU•IN/HR•FT^2•°F.
   - THE JACKETING SHALL CONFORM TO ASTM D374, ASTM E96, ASTM D882, ASTM 774, AND ASTM D781.
   - THE JACKETING SHALL BE EQUAL TO SARAN 560 VAPOR RETARDED FILM, MANUFACTURED BY THE DOW CHEMICAL COMPANY.

3, UNDERGROUND PIPING
   - THE INSULATION SHALL BE INSULATED WITH 2" THICK EXTRUDED POLYSTYRENE PIPE INSULATION AND CONFORM TO ASTM D1622, ASTM D1621, ASTM C272, ASTM C518, ASTM D2842, ASTM E96, ASTM D2126, AND ASTM D696.
   - THE INSULATION SHALL HAVE A MAXIMUM THERMAL CONDUCTIVITY (K) OF 0.259 BTU•IN/HR•FT^2•°F.
   - THE JACKETING SHALL CONFORM TO ASTM D374, ASTM E96, ASTM D882, ASTM 774, AND ASTM D781.
   - THE JACKETING SHALL BE EQUAL TO SARAN 560 VAPOR RETARDED FILM, MANUFACTURED BY THE DOW CHEMICAL COMPANY.

PIPING AND VALVE SUBMITTALS:

1. FOR MATERIALS, PRESSURE RATING, FUNCTION, AND OPERATION.

EXTRACTION PUMP

1. PUMP
   - CI PUMP WITH 316SS FRAME, FLANGES, CLAMPS, AND HARDWARE.
   - 1" DIAMETER EPDM HOSE WITH 316SS INSERT MATERIAL.
   - EPOXY SHOES.
   - BUNA SEALS.
   - MAXIMUM CONTINUOUS OUTPUT 11 GPM AT 100 RPM. MINIMUM RATED DISCHARGE PRESSURE 200 PSI.
   - PUMP MODEL # SPX25 HOSE PUMP.
   - MANUFACTURER SHALL BE WATSON–MARLOW BREDEL.
   - 1 HP TEFC MOTOR WITH 230V 1Φ POWER SUPPLY.

2. VARIABLE FREQUENCY DRIVE
   - 120/240VAC, 1–PHASE
   - NEMA 1 ENCLOSURE (MOUNT IN NEMA 4X ENCLOSURE)
   - INTEGRAL KEYPAD WITH LCD DISPLAY
   - TRANSISTOR & RESISTOR BRAKING
   - 9–DIGITAL INPUTS, 2 RELAY OUTPUTS, 2 DIGITAL OUTPUTS, 2 ANALOG INPUTS, 2 ANALOG OUTPUTS
   - 0–500HZ OUTPUT FREQUENCY
   - REVERSING FUNCTION
   - RS485 MODBUS PORT
   - RATED FOR 1–3HP LOADS
   - THE VFD SHALL BE EQUAL TO BALDOR VS1SP–6–1–1–B.

PORTABLE SPILL PAN

- TWO–WHEELED ROLL–UNDER SPILL PAN WITH APPROXIMATE 40 GALLON CAPACITY – 60–INCHES X 30 INCHES X 6 INCHES DEEP.
- ALUMINUM FRAME AND HANDLE WITH A FIBERGLASS PAN.
- PROVIDE A 3/4–INCH NPT STAINLESS COUPLING IS PROVIDED FOR ATTACHING EITHER A VALVE OR PUMP FOR DRAINING.
- PROVIDE A SPILL–BARROW™ AS MANUFACTURED BY TRANS ENVIRONMENTAL SYSTEMS, INC., (TESI).

OTHER CONTRACTOR SUBMITTALS:

1. VENDOR DATA ON GATES (SEE DRAWING C–301)
2. PHOTOGRAPHIC SITE DOCUMENTATION PRIOR TO AND AFTER COMPLETION OF THE WORK.

This drawing is the property of MACTEC Engineering and Consulting, Inc. including all patented and patentable features, and/or confidential information and its use is conditioned upon the users agreement not to reproduce the drawing, in whole or part, nor the material described thereon, nor the use of the drawing for any purpose other than specifically permitted in writing by MACTEC Engineering and Consulting, Inc.

NO.	DATE	REVISIONS	BY	CHK
2	03/09/11	ISSUED FOR CONSTRUCTION	REO	MAP
1	02/12/10	FINAL	REO	MAP
0	12/07/09	ISSUED FOR BID	REO	MAP
A	11/12/09	FOR CLIENT REVIEW	REO	MAP

DRAWN: DEL	PROJECT NO: 6107–10–0016
ENGINEER: MAP	SCALE: NONE
CHECKED: REO	APPROVED: PHT
DATE: 03/09/11	DATE: 03/09/11

MACTEC
Engineering and Consulting, Inc.
P.O. Box 7050, 511 Congress Street
Portland, ME 04112–7050
(207) 775–5401

DAPL EXTRACTION PILOT TEST
OLIN CHEMICAL SUPERFUND SITE
WILMINGTON, MASSACHUSETTS

CIVIL

CONSTRUCTION SPECIFICATIONS

DRAWING NO: C–304

8 / 15

P:\Projects\CADD–PORT\Projects\OLIN–Wilmington\C–304.dwg Wed, 22 Aug 2012 – 4:42pm

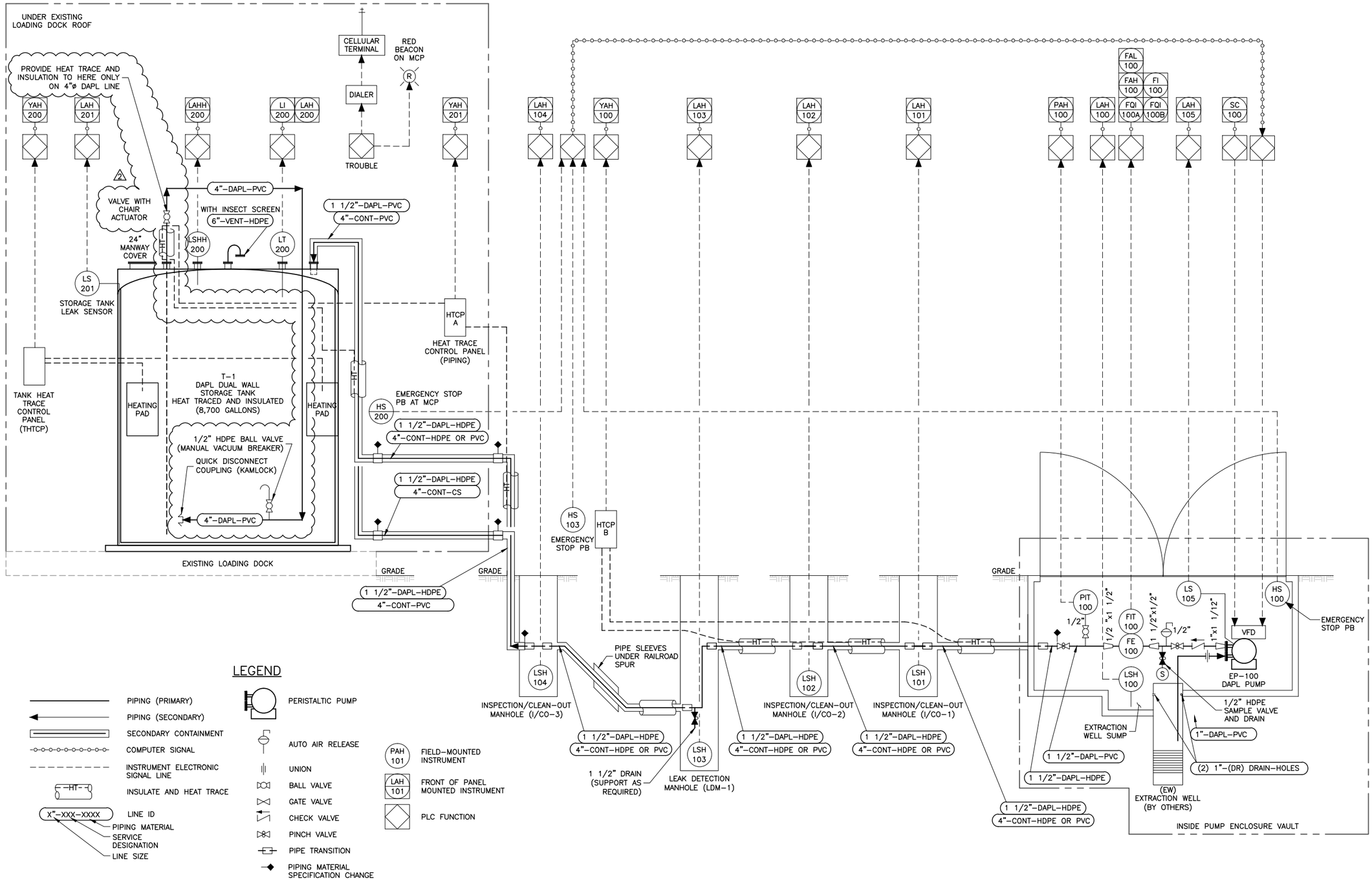

ABBREVIATIONS:

CONT	CONTAINMENT PIPE
DAPL	DENSE AQUEOUS PHASE LIQUID
DR	DRAIN
EP	EXTRACTION PUMP
EW	EXTRACTION WELL
FAH	FLOW ALARM HIGH
FAL	FLOW ALARM LOW
FE	FLOW ELEMENT
FI	FLOW INDICATOR
FIT	FLOW INDICATOR TRANSMITTER
FQI	FLOW TOTALIZING INDICATOR
FR	FLOW RECORDER
FS	FLOW SWITCH
HDPE	HIGH DENSITY POLYETHYLENE
HS	HAND SWITCH – ON/OFF (MAINT.)
HT	HEAT TRACE
HTCP	HEAT TRACING CONTROL PANEL
LAH	LEVEL ALARM HIGH
LAHH	LEVEL ALARM HIGH HIGH
LI	LEVEL INDICATOR
LS	LEVEL SWITCH
LSH	LEVEL SWITCH HIGH
LSHH	LEVEL SWITCH HIGH HIGH
LT	LEVEL TRANSMITTER
MCP	MAIN CONTROL PANEL
PAH	PRESSURE ALARM HIGH
PIT	PRESSURE INDICATOR TRANSMITTER
PSH	PRESSURE SWITCH HIGH
PVC	POLYVINYL CHLORIDE
S	SAMPLE PORT
SC	SPEED CONTROL
THTCP	TANK HEAT TRACING CONTROL PANEL
VFD	VARIABLE FREQUENCY DRIVE
YAH	HEAT TRACE CONTROLLER FAULT

NOTES:

1. FQI-100B IS RESETABLE, BY OPERATOR FQI-100A IS NOT RESETABLE.
2. ALL ALARMS ACTIVATE AUTO DIALER.

LEGEND

- PIPING (PRIMARY)
- PIPING (SECONDARY)
- SECONDARY CONTAINMENT
- COMPUTER SIGNAL
- INSTRUMENT ELECTRONIC SIGNAL LINE
- -HT- INSULATE AND HEAT TRACE
- X"-XXX-XXXX LINE ID
  - PIPING MATERIAL
  - SERVICE DESIGNATION
  - LINE SIZE
- PERISTALTIC PUMP
- AUTO AIR RELEASE
- UNION
- BALL VALVE
- GATE VALVE
- CHECK VALVE
- PINCH VALVE
- PIPE TRANSITION
- PIPING MATERIAL SPECIFICATION CHANGE
- PAH 101 FIELD-MOUNTED INSTRUMENT
- LAH 101 FRONT OF PANEL MOUNTED INSTRUMENT
- PLC FUNCTION

This drawing is the property of MACTEC Engineering and Consulting, Inc. including all patented and patentable features, and/or confidential information and its use is conditioned upon the users agreement not to reproduce the drawing, in whole or part, nor the material described thereon, nor the use of the drawing for any purpose other than specifically permitted in writing by MACTEC Engineering and Consulting, Inc.

NO.	DATE	REVISIONS	BY	CHK
2	03/09/11	ISSUED FOR CONSTRUCTION	REO	MAP
1	02/12/10	FINAL	REO	MAP
0	12/07/09	ISSUED FOR BID	REO	MAP
A	11/12/09	FOR CLIENT REVIEW	REO	MAP

DRAWN: DEL	PROJECT NO: 6107-10-0016
ENGINEER: REO	SCALE: NONE
CHECKED: MAP	APPROVED: PHT
DATE: 03/09/11	DATE: 03/09/11

MACTEC
Engineering and Consulting, Inc.
P.O. Box 7050, 511 Congress Street
Portland, ME 04112-7050
(207) 775-5401

DAPL EXTRACTION PILOT TEST
OLIN CHEMICAL SUPERFUND SITE
WILMINGTON, MASSACHUSETTS

PROCESS

PIPING AND INSTRUMENTATION DIAGRAM

DRAWING NO: D-601

ABBREVIATIONS

A	AMPERE
AC	ALTERNATING CURRENT
AD	AUTO DIALER
AFF	ABOVE FINISHED FLOOR
AFG	ABOVE FINISHED GRADE
AIC	AMPERES INTERRUPTING CAPACITY
ATC	AUTOMATIC TEMPERATURE CONTROL
ATS	AUTOMATIC TRANSFER SWITCH
AUX	AUXILIARY
AWG	AMERICAN WIRE GAUGE
BKR	BREAKER
C	CONDUIT
CB	CIRCUIT BREAKER
CKT	CIRCUIT
CT	CURRENT TRANSFORMER
CU	COPPER
DC	DIRECT CURRENT
DISC	DISCONNECT
EG	EQUIPMENT GROUND
EH	ELECTRICALLY HELD
EM	EMERGENCY
EMT	ELECTRICAL METALLIC TUBING
EPR	ETHYLENE PROPYLENE RUBBER
EMH	ELECTRICAL MANHOLE
EQUIP	EQUIPMENT
ES	EMERGENCY STOP
EUH	ELECTRIC UNIT HEATER
EX	EXTERIOR
EXTG	EXISTING
FA	FIRE ALARM
FC	FOOT-CANDLE
FDR	FEEDER
FLUOR	FLUORESCENT
FS	FLOW SWITCH (FA SYSTEM)
FVNR	FULL VOLTAGE NON REVERSING
FVR	FULL VOLTAGE REVERSING
GEN	GENERATOR
GF	GROUND FAULT
GFI	GROUND FAULT CIRCUIT INTERRUPTER
GND	GROUND
H	HAND HOLE
HOA	HAND-OFF-AUTOMATIC
HP	HORSE POWER
HPS	HIGH PRESSURE SODIUM
HT	HEAT TRACE
HV	HIGH VOLTAGE
HZ	HERTZ
IG	ISOLATED GROUND
JB	JUNCTION BOX
KV	KILOVOLT
KVA	KILO VOLT-AMPERE
KW	KILOWATT
KWH	KILOWATT HOUR
LPS	LOW PRESSURE SODIUM
LTG	LIGHTING
LSH	LEVEL SWITCH HIGH
LV	LOW VOLTAGE
MCB	MAIN CIRCUIT BREAKER
MCC	MOTOR CONTROL CENTER
MCP	MOTOR CIRCUIT PROTECTION
MDP	MAIN DISTRIBUTION PANEL
MH	METAL HALIDE
MOD	MOTOR OPERATED DAMPER
MS	MANUAL STARTER OIL/RIL
MTS	MANUAL TRANSFER SWITCH
MVA	MEGAVOLT-AMPERE
OH	OVERHEAD
OIT	OPERATOR INTERFACE TERMINAL
OL	OVER LOAD
OOA	ON-OFF-AUTOMATIC
P	POLE
PB	PUSH BUTTON
PF	POWER FACTOR
PH	PHASE
PNL	PANEL
POHE	PRIMARY OH ELECTRIC
PRI	PRIMARY
PT	POTENTIAL TRANSFORMER
PVC	POLYVINYL CHLORIDE
RGSC	RIGID GALVANIZED STEEL CONDUIT
RVSS	REDUCED VOLTAGE SOLID STATE
RSC	RIGID STEEL CONDUIT
S	SIGNAL
SEC	SECONDARY
SHLD	SHIELDED CABLE
SOHE	SECONDARY OH ELECTRIC
SV	SOLENOID VALVE
SW	SWITCH
SYM	SYMMETRICAL
T	TELEPHONE
TD	TELEDIALER
TDR	TIME DELAY RELAY
TEL	TELEPHONE
TM	TELEMETRY
TS	TEMPERATURE SWITCH
TR	TRANSFORMER
UG	UNDERGROUND
UPS	UNINTERRUPTED POWER SUPPLY
UT	UTILITY
V	VOLT
VA	VOLT-AMPERE
VFD	VARIABLE FREQUENCY DRIVE
VM	VOLT METER
VR	VOLTAGE REGULATOR
W	WATT
WH	WATT HOUR
WP	WEATHERPROOF
XFMR	TRANSFORMER
XLP	CROSS LINKED POLYETHYLENE
XP	EXPLOSION PROOF

POWER

DESCRIPTION

- 200/3 UNFUSED SAFETY SWITCH, RATING AS NOTED — POLES — AMPERES
- 30/15/3 FUSED SAFETY SWITCH, RATING AS NOTED — POLES — FUSE AMPERE RATING — SWITCH AMPERE RATING
- 1 MAGNETIC MOTOR STARTER, RATING AS NOTED — NEMA SIZE
- COMBINATION TYPE MAGNETIC MOTOR STARTER, RATING AS NOTED
- PUSHBUTTON OR SELECTOR SWITCH STATION
- EMERGENCY STOP P.B.
- C LIGHTING OR POWER CONTACTOR
- CB ENCLOSED CIRCUIT BREAKER
- T THERMOSTAT — C COOLING ONLY — F FREEZESTAT — D DUCT-MOUNTED
- UTILITY METER
- PANELBOARD, SURFACE MTD.
- PANELBOARD, FLUSH MTD.
- EQUIPMENT, TERMINAL, OR CONTROL CABINET
- 5 THREE PHASE MOTOR (HP AS SHOWN)
- SINGLE PHASE MOTOR
- T TRANSFORMER
- H ELECTRICAL HANDHOLE
- J JUNCTION BOX

SINGLE LINE DIAGRAM

DESCRIPTION

- TRANSFORMER
- CT CURRENT TRANSFORMER
- PT POTENTIAL TRANSFORMER
- 100AF — FRAME SIZE; CIRCUIT BREAKER; 70AT — TRIP AMPS
- SURGE CAPACITOR
- LIGHTNING ARRESTER
- DELTA CONNECTION
- WYE CONNECTION
- GROUND CONNECTION

LIGHTING FIXTURES

- H.I.D. WALL MOUNTED FIXTURE

WIRING

- — OHE — OVERHEAD ELECTRICAL
- WIRING, CONCEALED IN FINISHED AREAS, EXPOSED WHERE PERMITTED BY SPECIFICATIONS
- WIRING INSTALLED IN OR BELOW FLOOR SLAB
- LP1/2 HOME RUN TO PANEL (CKT. NO. AS SHOWN)
- 1 HOME RUN (NO. REFERS TO COND. & WIRE SCHED.)
- — DC — DC WIRING
- 3/4"C (2#12, 1#12G) CONDUIT (WIRES)
- CONDUIT DOWN
- CONDUIT UP
- US UNSWITCHED
- — — — — E BURIED ELECTRIC

HEAT TRACING

- HTCP P HT HEAT TRACE POWER CONNECTION
- HTCP E HT HEAT TRACE END KIT WITH POWER INDICATOR
- HTCP HEAT TRACE CONTROL PANEL
- — — — — HT — HEAT TRACE LINE

WIRING DEVICES

DESCRIPTION

- 20 AMPERE, 120 VOLT DUPLEX RECEPTACLE
- +48" INDICATES INCHES AFF MOUNTING HEIGHT
- WP WEATHERPROOF
- GFI GROUND FAULT INTERUPTER
- 20 AMPERE, 120 VOLT QUAD RECEPTACLE
- 20 AMPERE, 120 VOLT SINGLE RECEPTACLE
- TELEPHONE OUTLET, +18" AFF; W WALL MOUNTED, +54" AFF
- SINGLE SPECIAL PURPOSE RECEPTACLE; 30 INDICATES AMPERE SIZE

SCHEMATIC DIAGRAM

- CR CONTROL RELAY
- M MOTOR CONTACTOR
- CONTACT NORMALLY OPEN
- CONTACT NORMALLY CLOSED
- OVERLOAD HEATER ELEMENT
- SINGLE POLE SINGLE THROW SWITCH
- SELECTOR SWITCH
- START PUSHBUTTON, MOMENTARY CONTACT
- STOP PUSHBUTTON, MOMENTARY CONTACT
- RED MUSHROOM-HEAD MAINTAINED-TYPE EMERGENCY STOP PUSHBUTTON
- LIMIT SWITCH
- TEMPERATURE SWITCH
- FLOAT SWITCH
- PRESSURE SWITCH
- TIMED CONTACT
- R PILOT LIGHT, LETTER INDICATES COLOR — G GREEN — R RED — A AMBER

NEMA CLASSIFICATIONS FOR ELECTRICAL EQUIPMENT AND ENCLOSURES

(UNLESS OTHERWISE NOTED OR SPECIFIED)

LOCATION	CLASSIFICATION
EXTERIOR POWER	NEMA 3R
INTERIOR POWER	NEMA 1

GENERAL NOTES

1. ALL CONDUIT AND EQUIPMENT SHALL BE INSTALLED AND GROUNDED IN ACCORDANCE WITH THE RULES AND REGULATIONS OF THE CURRENT NATIONAL ELECTRICAL CODE.
2. CONDUIT RUNS ARE SHOWN DIAGRAMMATICALLY ONLY AND SHALL BE INSTALLED IN A MANNER TO PREVENT CONFLICTS WITH EQUIPMENT AND STRUCTURES. CONDUITS SHALL BE CONCEALED IN WALLS, AND ABOVE ANY SUSPENDED CEILINGS WHERE APPLICABLE. EXPOSED CEILING CONDUITS SHALL BE PERMITTED WHERE SUSPENDED CEILINGS ARE NOT USED. EXPOSED CONDUITS SHALL BE INSTALLED PARALLEL TO BEAMS AND WALLS.
3. CONDUITS SHALL BE PROPERLY TERMINATED WITH NEAT CONNECTIONS TO ALL ASSOCIATED EQUIPMENT.
4. CONTROL AND INSTRUMENTATION CONDUIT SIZES AND NUMBER OF CONDUCTORS ARE TO BE DETERMINED FROM SCHEMATIC DIAGRAMS, INSTRUMENTATION DIAGRAMS, AND/OR SPECIFICATIONS, IF NOT DIRECTLY SHOWN ON POWER PLANS. THE WIRING DIAGRAMS, QUANTITY AND SIZE OF WIRES AND CONDUIT REPRESENT A SUGGESTED ARRANGEMENT BASED UPON SELECTED STANDARD COMPONENTS OF ELECTRICAL AND INSTRUMENTATION EQUIPMENT. MODIFICATIONS REVIEWED BY THE ENGINEER WITH NO EXCEPTIONS TAKEN, MAY BE MADE BY THE CONTRACTOR TO ACCOMMODATE EQUIPMENT ACTUALLY PURCHASED. THE BASIC SEQUENCE AND METHOD OF CONTROL MUST BE MAINTAINED AS INDICATED ON THE DRAWINGS AND SPECIFICATIONS. EACH CONTROL AND INSTRUMENTATION CONDUIT SHALL ALSO CONTAIN 10 PER CENT SPARE CONDUCTORS, WITH A MINIMUM OF TWO SPARES, UP TO THE LIMIT OF CONDUIT FILL AS SPECIFIED BY THE NATIONAL ELECTRICAL CODE. INSTRUMENTATION SHIELDED CABLES SHALL BE INSTALLED IN RGS CONDUIT SEPARATE FROM OTHER POWER WIRING. PVC IS ALLOWED FOR INSTRUMENTATION UNDERGROUND.
5. EACH CONDUIT TO CARRY GROUND WIRE(S) ACCORDING TO NATIONAL ELECTRIC CODE IN ADDITION TO NUMBER OF CONDUCTORS SHOWN ON DRAWINGS OR PER NOTE 4 ABOVE. ALL GROUNDING MUST CONFORM TO ARTICLE 250 OF CURRENT NATIONAL ELECTRICAL CODE.
6. MINIMUM CONDUIT SIZE SHALL BE 3/4". MINIMUM POWER WIRING SHALL BE 2C#12 AWG WITH GROUND, AND 2C#14 FOR CONTROL. INSTRUMENTATION CABLE SHALL BE 2C#16 TWS AND 3C#16 TWS FOR SPEED POTENTIOMETER INSTALLED PER NEC. PROVIDE CONDUIT AND WIRING AS INDICATED.
7. ALL PANELBOARDS SHALL BE MOUNTED SO THAT THE DISTANCE FROM THE TOP CIRCUIT BREAKER OPERATING HANDLE TO FINISHED FLOOR SHALL NOT EXCEED 6'-6".
8. ALL SURFACE MOUNTED PANELS AND PANELBOARDS ON EXTERIOR WALLS ABOVE GRADE, SHALL BE MOUNTED TO MAINTAIN A 1/4" AIR SPACE BETWEEN THE ENCLOSURE AND THE WALL.
9. ELECTRICAL EQUIPMENT LOCATIONS ARE APPROXIMATE ONLY. COORDINATE LOCATIONS WITH PROCESS PIPING, ARCHITECTURAL, STRUCTURAL, AND MECHANICAL DRAWINGS. CONTRACTOR SHALL COORDINATE MANUFACTURERS EQUIPMENT REQUIREMENTS WITH SPACE AVAILABLE. FINAL CONTROL PANEL LOCATIONS SHALL BE FIELD COORDINATED.
10. ALL FIELD CONTROL CONDUCTORS WILL TERMINATE AT INDIVIDUAL TERMINAL BLOCKS WITHIN THE CONTROL ENCLOSURE. SERIES AND PARALLEL CONNECTION OF FIELD CONTROL CONDUCTORS WILL BE MADE ONLY AT CONTROL PANEL TERMINAL BLOCKS.
11. GROUND ALL CONDUCTOR SHIELDS AT PANEL ONLY – DO NOT GROUND SHIELDS AT BOTH ENDS.
12. AT THE FOLLOWING LOCATIONS, UNLESS OTHERWISE NOTED, PULL, JUNCTION, TERMINAL, SWITCH, AND OUTLET BOXES SHALL BE CAST IRON WHERE STEEL CONDUIT IS TERMINATED; OR SHALL BE CAST ALUMINUM WHERE ALUMINUM CONDUIT IS TERMINATED:

    A – AT LOCATIONS WHERE VAPORTIGHT LIGHTING FIXTURES AND/OR WATERTIGHT RECEPTACLES ARE INDICATED.
    B – AT LOCATIONS ON OR IN ALL OUTSIDE WALLS.
    C – OUTDOORS
13. NAMEPLATES SHALL CONFORM STRICTLY TO INSTRUCTIONS IN THE ELECTRICAL SPECIFICATIONS AND ON THE DRAWINGS. THE FOLLOWING SHALL HAVE NAMEPLATES:

    A – ALL LOCAL CONTROL STATIONS AT OR NEAR EQUIPMENT.
    B – ALL PANELBOARDS AND CONTROL PANELS.
14. PIPE SLEEVES FOR CONDUITS PASSING FROM NON-HAZARDOUS AREAS TO HAZARDOUS AREAS SHALL HAVE CAULKING APPLIED TO MAKE THE INSTALLATION GASTIGHT.
15. CONTRACTOR SHALL PROVIDE ALL CONDUIT, WIRING, EQUIPMENT, AND CONTROL DEVICES AS INDICATED BY SCHEMATICS, SINGLE LINE DIAGRAMS, SCHEDULES, PLANS, SPECIFICATIONS, AND VENDOR DOCUMENTATION TO PROVIDE A COMPLETE WORKING SYSTEM.
16. PROVIDE CONDUIT FREEZE EXPANSION FITTINGS FOR ALL EXTERIOR CONDUIT SYSTEMS AS REQUIRED.
17. CONTRACTOR SHALL PROVIDE A COMPLETE WORKING OPERATING SYSTEM IN ACCORDANCE WITH ALL DRAWINGS, SPECIFICATIONS, CODES AND STANDARDS.
18. ALL CONDUIT UNDERGROUND SHALL BE SCHEDULE 80 PVC.
19. ALL GENERAL NOTES, SYMBOL LISTS, AND ABBREVIATIONS SHALL BE CONSIDERED AS APPLICABLE TO ALL ELECTRICAL DRAWINGS FOR THIS PROJECT. SYMBOLS AND ABBREVIATIONS SHOWN ON THIS SHEET ARE FOR REFERENCE ONLY AND DO NOT INDICATE THEIR INCORPORATION IN THE DESIGN.

3-4-2011

This drawing is the property of MACTEC Engineering and Consulting, Inc. including all patented and patentable features, and/or confidential information and its use is conditioned upon the users agreement not to reproduce the drawing, in whole or part, nor the material described thereon, nor the use of the drawing for any purpose other than specifically permitted in writing by MACTEC Engineering and Consulting, Inc.

NO.	DATE	REVISIONS	BY	CHK
2	03/09/11	ISSUED FOR CONSTRUCTION	REO	MAP
1	02/12/10	FINAL	REO	MAP
0	12/07/09	ISSUED FOR BID	REO	BDE
A	12/07/09	FOR CLIENT REVIEW	REO	BDE

DRAWN: BDE	PROJECT NO: 6107-10-0016
ENGINEER: BDE	SCALE: NONE
CHECKED: REO	APPROVED: PHT
DATE: 03/09/11	DATE: 03/09/11

MACTEC Engineering and Consulting, Inc.
P.O. Box 7050, 511 Congress Street
Portland, ME 04112-7050
(207) 775-5401

DAPL EXTRACTION PILOT TEST
OLIN CHEMICAL SUPERFUND SITE
WILMINGTON, MASSACHUSETTS

ELECTRICAL

ELECTRICAL GENERAL NOTES AND LEGEND

DRAWING NO: E-001

10 / 15

NEW OVERHEAD ELECTRICAL SERVICE (FOR CONTINUATION – SEE INSERT A THIS SHEET

51 EAMES STREET PROPERTY

EXISTING CONC SLAB

EXISTING COVERED LOADING DOCK

NEW STORAGE TANK (T-1)

EXISTING EAST WAREHOUSE BUILDING

EXISTING WEST WAREHOUSE BUILDING

1 1/2"-DAPL-PVC CARRIER
4"-CONT-PVC

NEW 1 1/2" HDPE PIPE AND 4" CONTAINMENT PIPE ON PIPE RACK. HEAT TRACE FROM I/CO-3 TO TANK T-1.

2"C(3"2,1#2G)
2"C(24#14)
2"C(2-2/C#16TSP)
1"C(2#10,1#10G)
ON PIPE RACK

EAMES STREET

CONTAINMENT AREA

NEW ELECTRICAL EQUIPMENT RACK

NEW ELECTRICAL HAND HOLE

NEW I/CO-3

2"C(2#2,1#2G)
2"C(18#14)
2"C(2-2/C#16TSP)
1"C(4#10,1#10G)

NO HEAT TRACING UNDER RAILROAD

PIPE SLEEVES UNDER RAILROAD SPURS

EXISTING SPURS RAILROAD TRACK

EXISTING PAN-AM RAILROAD TRACKS

NEW LEAK DETECTION MANHOLE

NEW ELECTRICAL HAND HOLE

NEW 1 1/2" HDPE DAPL CARRIER PIPE
4" CONTAINMENT PIPE
HEAT TRACED (UNDER GROUND)

2"C(2#2,1#2G)
2"C(16#14)
2"C(2-2/C#16TSP)
1"C(2#10,1#10G)

NEW I/CO-2

NEW ELECTRICAL HAND HOLE

2"C(2#2,1#2G)
2"C(14#14)
2"C(2-2/C#16TSP)
1"C(2#10,1#10G)

NEW UTILITY TRENCH

NEW I/CO-1
INSPECTION/CLEAN-OUT STRUCTURE (TYP)

NEW ELECTRICAL HAND HOLE (TYP OF 4)

2"C(2#2,1#2G)
2"C(12#14)
2"C(2-2/C#16TSP)

NEW PUMP ENCLOSURE VAULT

NEW I/CO-4

EXISTING BUILDING #8 JEWEL DRIVE

2 JEWEL DRIVE

10 JEWEL DRIVE

JEWEL DRIVE

EAST

WES

INSERT A

PLANT B GROUNDWATER TREATMENT BUILDING (FORMER PLANT B TANK FARM)

NEW POLE & GUY WIRE

TRANSFORMER AREA

INSTALL NEW ALUMINUM AERIAL CABLE, 2/C#2 W/ MESSENGER, FROM EXISTING FUSED DISCONNECT SWITCH TO WEST WAREHOUSE BUILDING LOADING DOCK.

NEW OVERHEAD ELECTRICAL SERVICE

NEW POLE

EXISTING UTILITY POLE AT EXISTING WEST WAREHOUSE BUILDING

NEW DAPL DUAL WALL STORAGE TANK (T-1)

LEGEND:

W	WATER LINE
SD	DRAIN LINE
SS	SEWER LINE
OH	OVERHEAD WIRES
	CHAINLINK FENCE
	EDGE OF WOODS
	RAILROAD TRACKS
	SEWER MANHOLE (SMH)
	DRAIN MANHOLE (DMH)
	CATCH BASIN (CB)
	WATER VALVE
	HYDRANT
	FIRE ALARM BOX
	LIGHT POLE
	UTILITY POLE
	GUY WIRE
	DUAL WALL CONVEYANCE PIPING
	DUAL WALL CONVEYANCE PIPING UNDERGROUND
OHU OHU	POWER CONDUIT OVERHEAD
E+I	POWER AND INSTRUMENTATION CONDUIT
	POWER POLE
	LEAK DETECTION MANHOLE
EW	EXTRACTION WELL (BY OTHERS)
ILW	INDUCTANCE LOGGING WELL (BY OTHERS)
ML	MULTILEVEL PIEZOMETER (BY OTHERS)
I/CO-1	INSPECTION/CLEAN-OUT STRUCTURE
	LIMITS OF PROPERTY USE
	STAKED HAY BALES
SF	SILT FENCE
	LIMIT OF DISTURBANCE/WORK

0 25 50 100
SCALE IN FEET

This drawing is the property of MACTEC Engineering and Consulting, Inc. including all patented and patentable features, and/or confidential information and its use is conditioned upon the users agreement not to reproduce the drawing, in whole or part, nor the material described thereon, nor the use of the drawing for any purpose other than specifically permitted in writing by MACTEC Engineering and Consulting, Inc.

NO.	DATE	REVISIONS	BY	CHK
4	11/03/12	REVISED LOCATION FOR EW AND VAULT	REO	MAP
3	04/05/11	ADDRESSED TOWN OF WILMINGTON COMMENTS	REO	MAP
2	03/09/11	ISSUED FOR CONSTRUCTION	REO	MAP
1	02/12/10	FINAL	REO	MAP
0	12/07/09	ISSUED FOR BID	REO	BDE
A	11/12/09	FOR CLIENT REVIEW	REO	BDE

DRAWN: DEL	PROJECT NO: 6107-10-0016
ENGINEER: BDE	SCALE: 1" = 50'
CHECKED: REO	APPROVED: PHT
DATE: 03/09/11	DATE: 03/09/11

MACTEC

Engineering and Consulting, Inc.
P.O. Box 7050, 511 Congress Street
Portland, ME 04112-7050
(207) 775-5401

DAPL EXTRACTION PILOT TEST
OLIN CHEMICAL SUPERFUND SITE
WILMINGTON, MASSACHUSETTS

ELECTRICAL

PROPOSED ELECTRICAL SITE PLAN

DRAWING NO: E-101

11 / 15

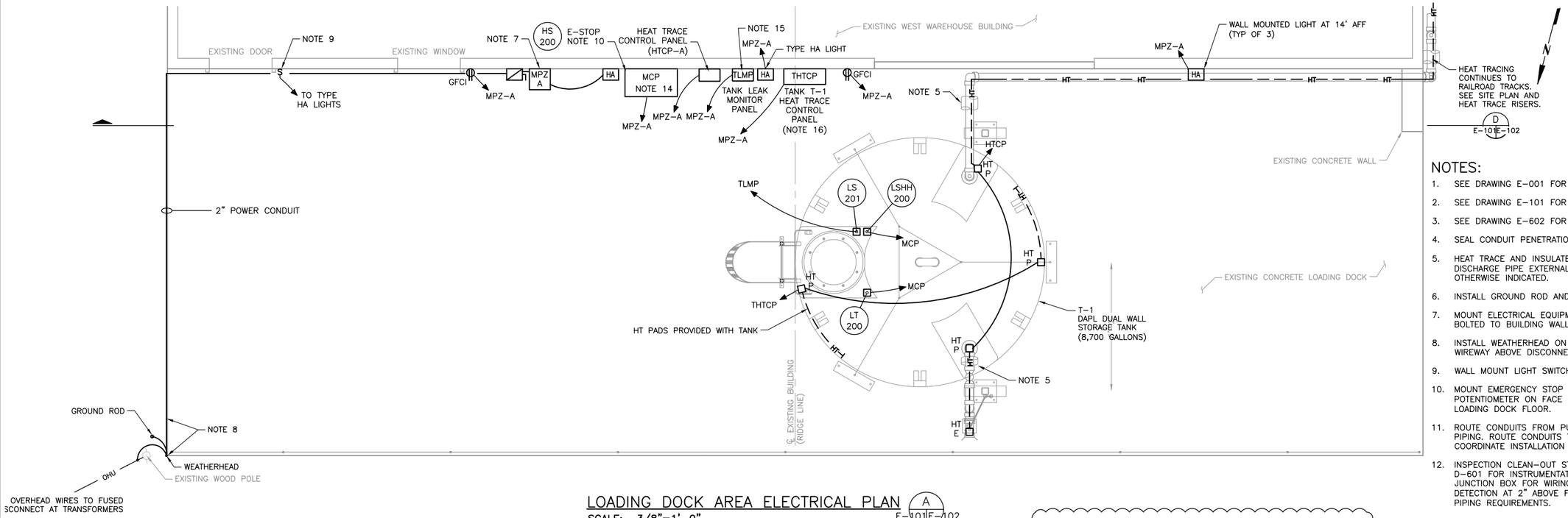

LOADING DOCK AREA ELECTRICAL PLAN (A / E-101 E-102)

SCALE: 3/8"=1'-0"

2 0 2 4 6 — SCALE OF FEET — 3/8" = 1'-0"

NOTES:

1. SEE DRAWING E-001 FOR SYMBOLS AND LEGEND.
2. SEE DRAWING E-101 FOR ELECTRICAL SITE PLAN.
3. SEE DRAWING E-602 FOR ELECTRICAL SPECIFICATIONS.
4. SEAL CONDUIT PENETRATIONS THROUGH ALL BELOW GRADE WALLS.
5. HEAT TRACE AND INSULATE 4" PVC CONTAINMENT PIPE, 4" PVC TANK DISCHARGE PIPE EXTERNAL TO PUMP ENCLOSURE VAULT, UNLESS OTHERWISE INDICATED.
6. INSTALL GROUND ROD AND GROUND CONDUCTOR TO LP-A.
7. MOUNT ELECTRICAL EQUIPMENT ON GALVANIZED STEEL CHANNEL RACK BOLTED TO BUILDING WALL. SEE DETAIL D, SHEET E-103.
8. INSTALL WEATHERHEAD ON SIDE OF BUILDING. INSTALL CONDUIT TO WIREWAY ABOVE DISCONNECTS AND MPZ-A.
9. WALL MOUNT LIGHT SWITCH.
10. MOUNT EMERGENCY STOP PUSHBUTTON AND PUMP SPEED POTENTIOMETER ON FACE OF MAIN CONTROL PANEL, 54" ABOVE LOADING DOCK FLOOR.
11. ROUTE CONDUITS FROM PUMP VAULT AREA TO TANK AREA FOLLOWING PIPING. ROUTE CONDUITS TO EACH DEVICE AS REQUIRED IN FIELD. COORDINATE INSTALLATION WITH PIPING AND SUPPORT REQUIREMENTS.
12. INSPECTION CLEAN-OUT STRUCTURE LEVEL SWITCH. SEE DRAWING D-601 FOR INSTRUMENTATION NUMBER FOR EACH DEVICE. PROVIDE JUNCTION BOX FOR WIRING FROM DISCRETE CONDUIT. SET FOR DETECTION AT 2" ABOVE FINISHED BASE. COORDINATE LOCATION WITH PIPING REQUIREMENTS.
13. HEAT TRACE AND INSULATE 4" PVC CONTAINMENT PIPE EXTERNAL TO INSPECTION/CLEAN-OUT STRUCTURES AND LEAK DETECTION MANHOLE.
14. CONTROL PANEL SHALL CONTAIN PLC FOR SYSTEM, TELEPHONE DIALER, OPERATOR INTERFACE TOUCH SCREEN DISPLAY, PUMP SPEED CONTROL & CELLULAR TERMINAL.
15. TANK LEAK MONITOR CONTROL PANEL PROVIDED WITH TANK.
16. TANK HEAT TRACE CONTROL PANEL FURNISHED WITH TANK.
17. POWER FOR INSTRUMENTS ON TANK T-1 SHALL ORIGINATE AT THE MAIN CONTROL PANEL. ALL REQUIRED CONVERTERS AND POWER SUPPLIES FOR FIELD DEVICES SHALL BE PROVIDED WITH MAIN CONTROL PANEL.

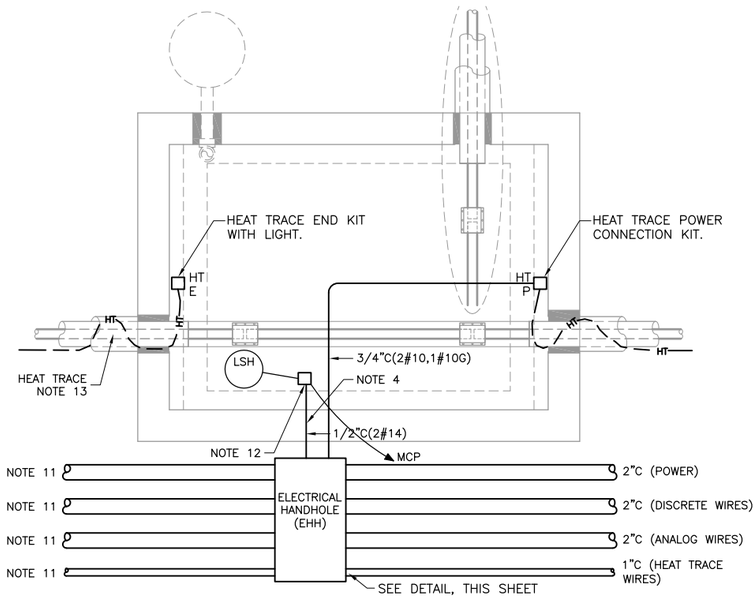

TYPICAL INSPECTION/CLEAN-OUT STRUCTURE ELECTRICAL PLAN (C / E-101 E-102)

NTS

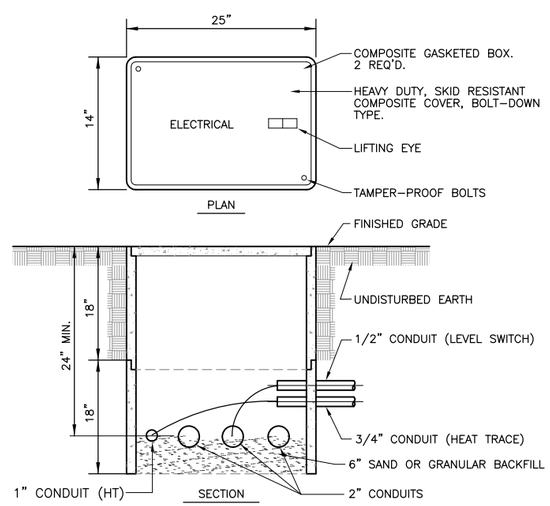

ELECTRICAL HANDHOLE DETAIL

NTS

4

FOR REVISIONS TO PUMP ENCLOSURE VAULT FLOOR PLAN DETAIL – SEE DRAWING C-301

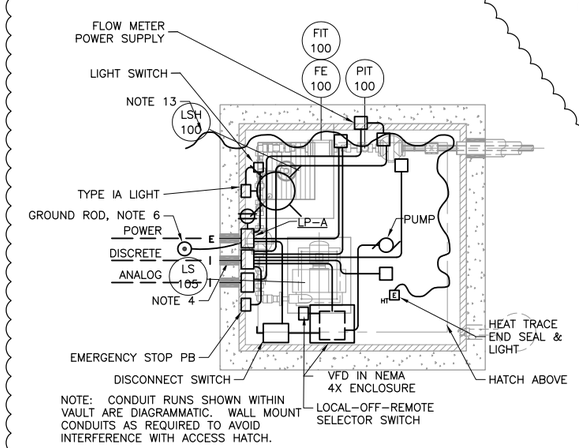

PUMP ENCLOSURE VAULT ELECTRICAL PLAN (B / E-101 E-102)

NTS

WORK IN PUMP ENCLOSURE VAULT:

A. INSTALL LOAD CENTER LP-A, DISCONNECT SWITCH, VFD AND ENCLOSURE (PROVIDED BY PUMP SUPPLIER), LOCAL-OFF-REMOTE SWITCH, DAPL PUMP, LIGHT AND SWITCH, EMERGENCY STOP PUSHBUTTON, FE-100 POWER SUPPLY AND GFCI RECEPTACLE.

B. INSTALL WIRING TO FLOAT SWITCH, FLOW ELEMENT AND TRANSMITTER, PRESSURE TRANSMITTER AND GLYCOL PRESSURE SWITCH (IN PUMP). INSTALL WIRES FROM DEVICES TO MAIN CONTROL PANEL VIA ANALOG OR DISCRETE CONDUITS AS REQUIRED. SEE D-601.

C. INSTALL HEAT TRACING CABLE, END KIT, AND WIRE AND CONDUIT TO HEAT TRACE CONTROL PANEL HTCP-B. MOUNT HTCP-B ON EQUIPMENT RACK. SEE HEAT TRACE RISERS ON E-601.

D. PROVIDE 6"X6"X4" GASKETED JUNCTION BOXES ON ENDS OF 2" INSTRUMENTATION CONDUITS WITHIN VAULT. EXTEND CONDUITS AND CONDUCTORS FROM JUNCTION BOXES TO LOADS WITHIN VAULT. FIELD ROUTE CONDUITS AS REQUIRED. COORDINATE WITH MECHANICAL PIPING.

E. PRESSURE TRANSMITTER PIT-100 SHALL BE LOOP POWERED, 24VDC, WITH 4-20mA OUTPUT AND LOCAL DISPLAY, 0-100PSIG. DWYER 619-4 OR EQUAL.

F. 120VAC INPUT, 24-VOLT, DC OUTPUT POWER SUPPLY FOR FIT-100 SHALL BE MOUNTED IN A NEMA 3R ENCLOSURE IN THE PUMP VAULT NEAR THE FLOW TRANSMITTER. TRC ELECTRONICS LPV-20-24, SOLA OR EQUAL.

This drawing is the property of MACTEC Engineering and Consulting, Inc. including all patented and potentable features, and/or confidential information and its use is conditioned upon the users agreement not to reproduce the drawing, in whole or part, nor the material described thereon, nor the use of the drawing for any purpose other than specifically permitted in writing by MACTEC Engineering and Consulting, Inc.

NO.	DATE	REVISIONS	BY	CHK
4	05/15/12	REVISED VAULT	REO	MAP
3	04/05/11	ADDRESSED TOWN OF WILMINGTON COMMENTS	REO	MAP
2	03/09/11	ISSUED FOR CONSTRUCTION	REO	MAP
1	02/12/10	FINAL	REO	MAP
0	12/07/09	ISSUED FOR BID	REO	BDE
A	11/12/09	FOR CLIENT REVIEW	REO	BDE

DRAWN: DEL	PROJECT NO: 6107-10-0016
ENGINEER: KWD	SCALE: AS NOTED
CHECKED: REO	APPROVED: PHT
DATE: 03/09/11	DATE: 03/09/11

MACTEC
Engineering and Consulting, Inc.
P.O. Box 7050, 511 Congress Street
Portland, ME 04112-7050
(207) 775-5401

DAPL EXTRACTION PILOT TEST
OLIN CHEMICAL SUPERFUND SITE
WILMINGTON, MASSACHUSETTS

ELECTRICAL
ELECTRICAL PLANS AND DETAIL

DRAWING NO: E-102
12 / 15

NOTES:

1. SEE MAIN CONTROL PANEL DETAIL, SHEET E-601.

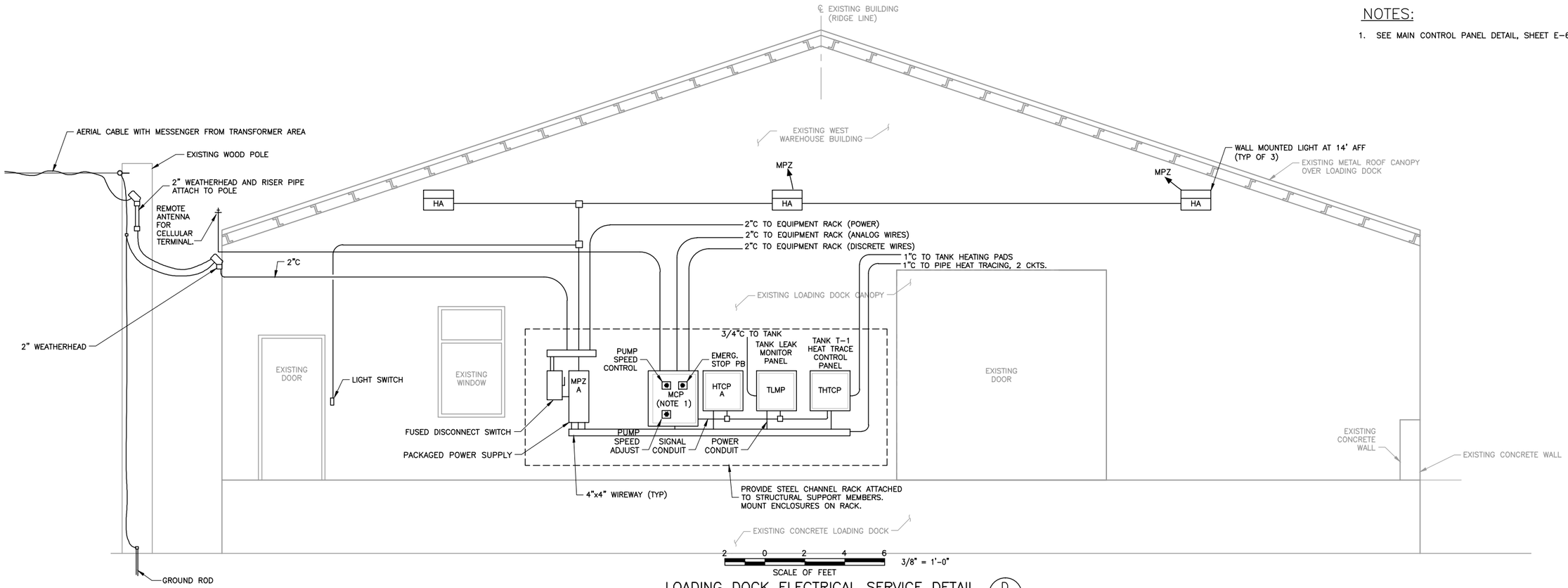

LOADING DOCK ELECTRICAL SERVICE DETAIL (D / E-101 | E-103)

3/8"=1'-0"

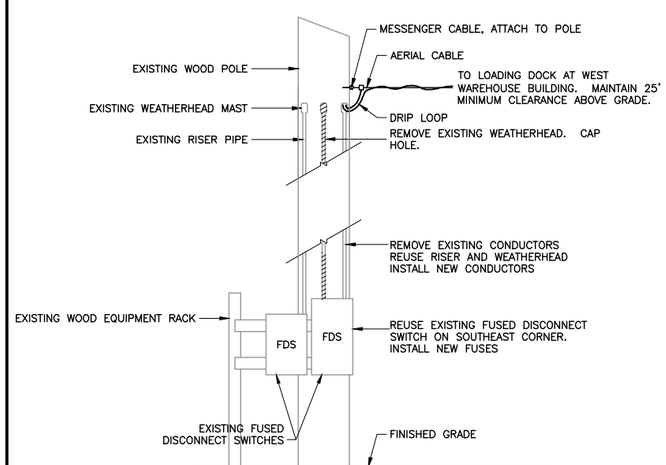

TRANSFORMER AREA SERVICE CONNECTION DETAIL (F / E-101 | E-103)

NOT TO SCALE

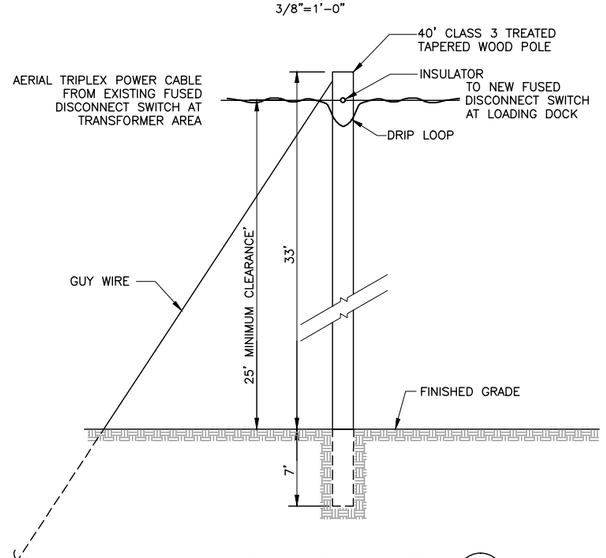

UTILITY POLE DETAIL (G / E-101 | E-103)

NOT TO SCALE

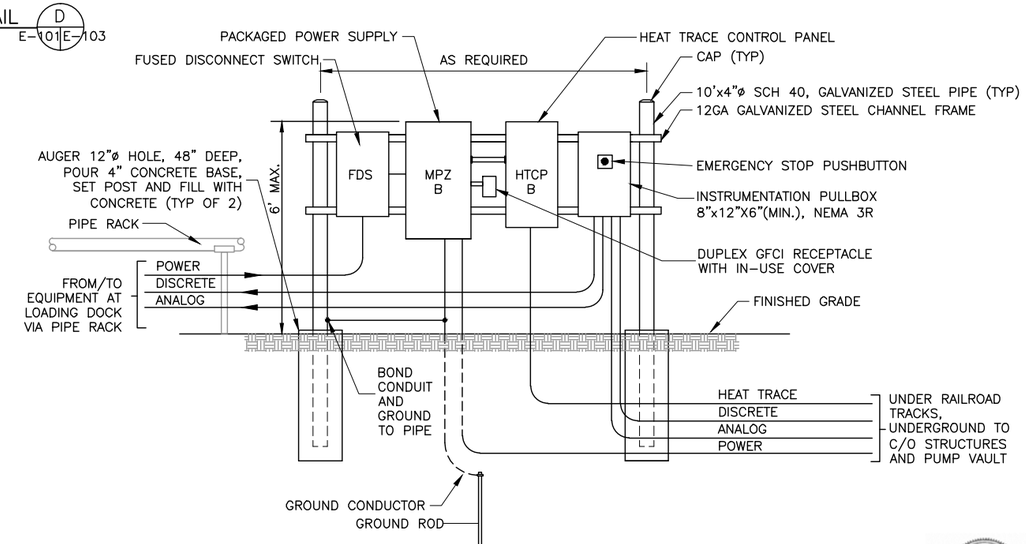

EQUIPMENT RACK DETAIL (E / E-101 | E-103)

NOT TO SCALE

This drawing is the property of MACTEC Engineering and Consulting, Inc. including all patented and patentable features, and/or confidential information and its use is conditioned upon the users agreement not to reproduce the drawing, in whole or part, nor the material described thereon, nor the use of the drawing for any purpose other than specifically permitted in writing by MACTEC Engineering and Consulting, Inc.

NO.	DATE	REVISIONS	BY	CHK
2	03/09/11	ISSUED FOR CONSTRUCTION	REO	MAP
1	02/12/10	FINAL	REO	MAP
0	12/07/09	ISSUED FOR BID	REO	BDE
A	11/12/09	FOR CLIENT REVIEW	REO	BDE

DRAWN: BDE	PROJECT NO: 6107-10-0016
ENGINEER: BDE	SCALE: AS NOTED
CHECKED: REO	APPROVED: PHT
DATE: 03/09/11	DATE: 003/09/11

MACTEC
Engineering and Consulting, Inc.
P.O. Box 7050, 511 Congress Street
Portland, ME 04112-7050
(207) 775-5401

DAPL EXTRACTION PILOT TEST
OLIN CHEMICAL SUPERFUND SITE
WILMINGTON, MASSACHUSETTS

ELECTRICAL

ELECTRICAL DETAILS

DRAWING NO: E-103

LUMINAIRE SCHEDULE

CODE	LIGHT SOURCE TYPE	LIGHT SOURCE LAMPING	MOUNTING	MANUFACTURER	CATALOG NO.	VOLTS	DESCRIPTION
HA	METAL HALIDE	175 WATT	WALL	LITHONIA	TWP-175M-120-SF	120 VAC	WALL PACK LUMINAIRE, CAST ALUM. HOUSING, POLYCARBONATE REFRACTOR, DARK BRONZE FINISH
IA	INCANDESCENT	150 WATT	WALL	CROUSE-HINDS	VXHBF15GP	120 VAC	ENCLOSED AND GASKETED LUMINAIRE, CAST ALUM. HOUSING, TEMPERED GLASS GLOBE, GUARD

MPZ-A SCHEDULE

TRANSFORMER SIZE: 10KVA
MOUNTING TYPE: SURFACE
MAIN CB RATING: 30A
SEC CB RATING: 60A

LOCATION: LOADING DOCK
SUPPLY VOLTAGE: 480V, 1PH, 3W
SECONDARY VOLTAGE: 120/240V, 1PH, 3W
FED FROM: FUSED DISC AT LOADING DOCK
SC RATING (KAIC): 18kAIC

LOAD AMPS	CB SIZE	LOAD DESCRIPTION	CKT NO.	PH-A VA	PH-B VA	CKT NO.	CB SIZE	LOAD DESCRIPTION	LOAD AMPS
5	20	MAIN CONTROL PANEL (MCP)	1	600		2	20	SPARE	0
18	30	HEAT TRACE CONTROL PANEL (HTCP-A)	3		3360	4	20	GFCI RECEPTACLES	10
0	20	SPARE	5	600		6	20	LEVEL SENSORS AND TRANSMITTER	5
0	20	SPARE	7		0	8	20	SPARE	0
24	30	TANK HEAT TRACE PANEL (THTCP)	9	3600		10	20	LIGHTS	6
		LOAD PER PHASE (AMPS)		40	28				
		LOAD PER PHASE (KVA)		4.8	3.36				

MPZ-B SCHEDULE

TRANSFORMER SIZE: 10KVA
MOUNTING TYPE: SURFACE
MAIN CB RATING: 30A
SEC CB RATING: 60A

LOCATION: EQUIPMENT RACK
SUPPLY VOLTAGE: 480V, 1PH, 3W
SECONDARY VOLTAGE: 120/240V, 1PH, 3W
FED FROM: FUSED DISC AT EQUIP. RACK
SC RATING (KAIC): 18kAIC

LOAD AMPS	CB SIZE	LOAD DESCRIPTION	CKT NO.	PH-A VA	PH-B VA	CKT NO.	CB SIZE	LOAD DESCRIPTION	LOAD AMPS
6	20	PANEL LP-A (PUMP VAULT)	1	720		2	20	SPARE	0
9			3		4080	4	30	HEAT TRACE CONTROL PANEL (HTCP-B)	25
10	20	GFCI RECEPTACLE	5	1800		6	20	FLOW METER & PRESSURE TRANSMITTER	5
0	20	SPARE	7		0	8	20	SPARE	0
0	20	SPARE	9	0		10	20	SPARE	0
		LOAD PER PHASE (AMPS)		21	34				
		LOAD PER PHASE (KVA)		2.52	4.08				

LP-A SCHEDULE

MOUNTING TYPE: SURFACE
RATING: 100A BUS
MAIN LUGS ONLY

LOCATION: PUMP VAULT
SUPPLY VOLTAGE: 120/240V, 1PH, 3W
FED FROM: MPZ-B
SC RATING (KAIC): 18kAIC

LOAD AMPS	CB SIZE	LOAD DESCRIPTION	CKT NO.	PH-A VA	PH-B VA	CKT NO.	CB SIZE	LOAD DESCRIPTION	LOAD AMPS
4	20	DAPL PUMP & VFD	1	480		2	20	SPARE	0
4			3		1080	4	20	GFCI RECEPTACLE	5
1	20	FLOW TRANSMITTER FIT-100 24VDC P/S	5	240		6	20	VAULT LIGHT	1
		LOAD PER PHASE (AMPS)		6	9				
		LOAD PER PHASE (KVA)		0.72	1.08				

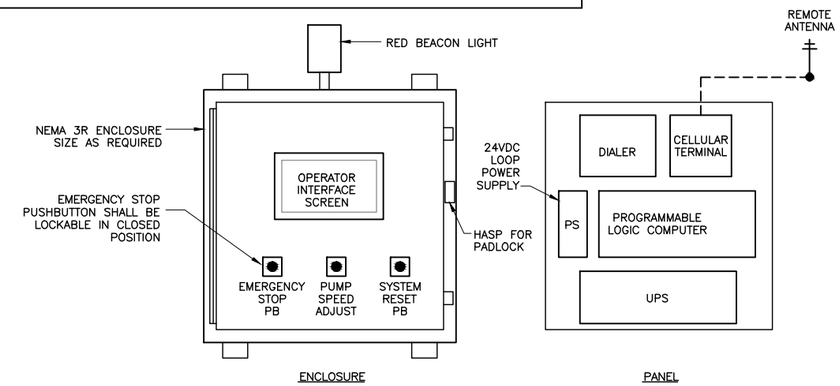

MAIN CONTROL PANEL DETAIL

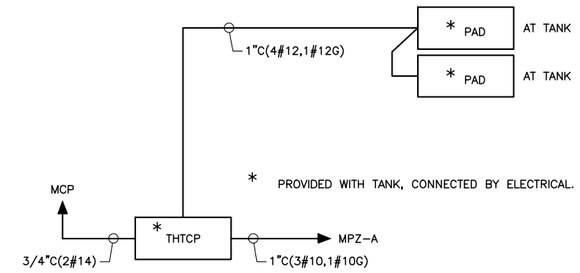

AT LOADING DOCK

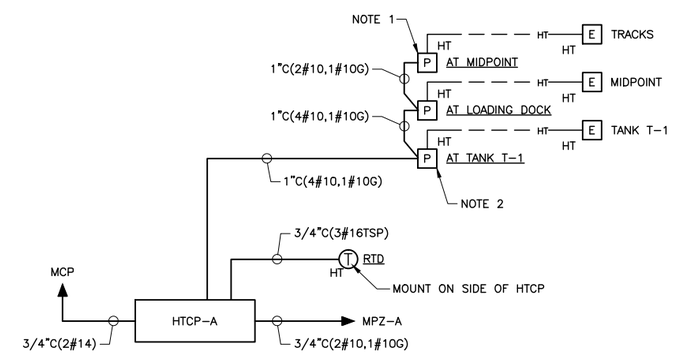

AT LOADING DOCK

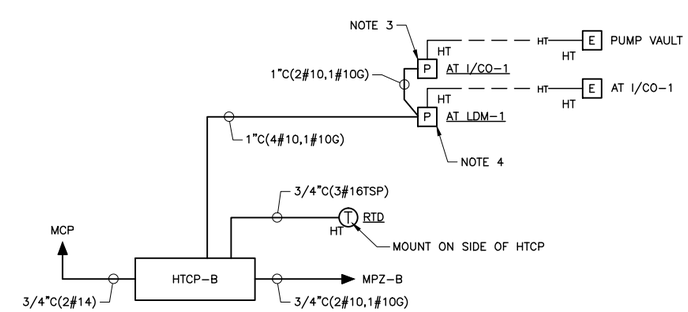

AT EQUIPMENT RACK

HEAT TRACING RISERS

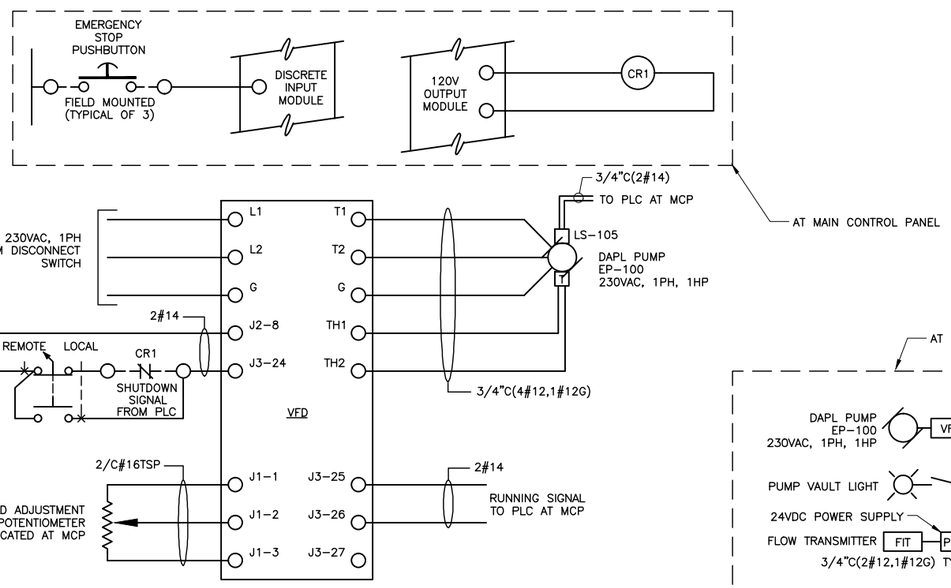

DAPL PUMP VFD AND E-STOP WIRING DIAGRAM

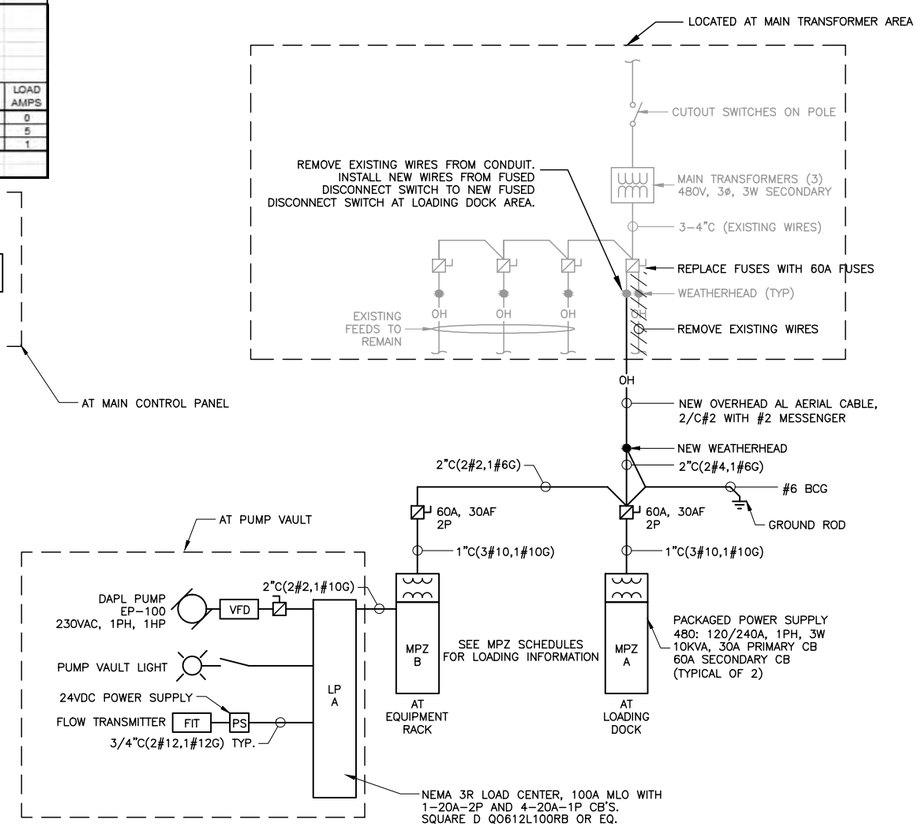

POWER ONE-LINE DIAGRAM

HEAT TRACING NOTES:

1. INSTALL POWER CONNECTION KIT AT A POINT MIDWAY BETWEEN THE WAREHOUSE BUILDING AND THE NEW ELECTRICAL EQUIPMENT RACK, APPROX. STA. 2+00. INSTALL HEAT TRACE CABLE ON EXPOSED PIPING FROM POWER KIT TO EQUIPMENT RACK.
2. INSTALL POWER CONNECTION KIT AT TANK T-1. CONDUIT AND WIRE FROM TANK T-1 TO A POINT MIDWAY BETWEEN THE WAREHOUSE BUILDING AND THE NEW ELECTRICAL EQUIPMENT RACK. INSTALL END SEAL KIT WITH LIGHT. ALSO INSTALL POWER CONNECTION KIT, HEAT TRACE CABLE AND END KIT WITH LIGHT AT TANK DISCHARGE PIPE, POWERED FROM THE SAME CIRCUIT.
3. INSTALL POWER CONNECTION KIT IN LEAK DETECTION MANHOLE LDM-1. INSTALL CONDUIT AND WIRES TO MPZ-B VIA SLEEVE UNDER TRACKS. INSTALL HEAT TRACE CABLE FROM LDM-1 TO I/CO-1. INSTALL END SEAL KIT WITH LIGHT.
4. INSTALL POWER CONNECTION KIT AT I/CO-1. INSTALL HEAT TRACE CABLE FROM I/CO-1 TO PUMP VAULT. INSTALL END SEAL KIT WITH LIGHT.

This drawing is the property of MACTEC Engineering and Consulting, Inc. including all patented and patentable features, and/or confidential information and its use is conditioned upon the users agreement not to reproduce the drawing, in whole or part, nor the material described thereon, nor the use of the drawing for any purpose other than specifically permitted in writing by MACTEC Engineering and Consulting, Inc.

NO.	DATE	REVISIONS	BY	CHK
2	03/09/11	ISSUED FOR CONSTRUCTION	REO	MAP
1	02/12/10	FINAL	REO	MAP
0	12/07/09	ISSUED FOR BID	REO	BDE
A	11/12/09	FOR CLIENT REVIEW	REO	BDE

DRAWN: BDE	PROJECT NO: 6107-10-0016
ENGINEER: BDE	SCALE: NONE
CHECKED: REO	APPROVED: PHT
DATE: 03/09/11	DATE: 03/09/11

MACTEC
Engineering and Consulting, Inc.
P.O. Box 7050, 511 Congress Street
Portland, ME 04112-7050
(207) 775-5401

DAPL EXTRACTION PILOT TEST
OLIN CHEMICAL SUPERFUND SITE
WILMINGTON, MASSACHUSETTS

ELECTRICAL
ONE-LINE, HEAT TRACE RISERS
WIRING DIAGRAMS, SCHEDULES

DRAWING NO: E-601
14 / 15

1.01 DESCRIPTION

A. THE DRAWINGS ARE DIAGRAMMATIC AND SHOW ONLY APPROXIMATE LOCATIONS OF EQUIPMENT, FIXTURES, PANELBOARDS, WIRING DEVICES, ETC.
B. THE GENERAL RUN OF ELECTRICAL FEEDERS, BRANCH CIRCUITS, CONDUITS, ETC. IS INDICATED ON THE DRAWINGS. IT IS NOT INTENDED THAT THE EXACT ROUTING BE DETERMINED THEREFROM.
C. CIRCUIT DESIGNATIONS ON SINGLE LINE DIAGRAMS, ELECTRICAL SCHEMATICS, INSTRUMENTATION SCHEMATICS, PANELBOARD SCHEDULES AND IN THE FORM OF "HOME RUNS" ON THE DRAWINGS, INDICATES THE DESIGNATION OF THE BRANCH CIRCUIT, THE SIZE AND QUANTITY OF BRANCH CIRCUIT CONDUCTORS, THE BRANCH CIRCUIT OVERCURRENT DEVICE RATING AND THE PANELBOARD OR INTERCONNECTION BOX FROM WHICH THE BRANCH CIRCUIT IS SERVED.
D. ALL EQUIPMENT, ACCESSORIES AND ASSOCIATED RACEWAYS, ETC., SHALL BE INSTALLED IN SUCH A MANNER THAT AMPLE MAINTENANCE AND PASSAGE SPACE AND CODE REQUIREMENT SPACE/ACCESS IS PROVIDED.
E. WHERE MORE THAN ONE TRADE IS INVOLVED IN AN AREA, ALL SHALL COOPERATE AND INSTALL THEIR OWN WORK TO UTILIZE THE SPACE EQUALLY BETWEEN THEM IN PROPORTION TO THEIR INDIVIDUAL REQUIREMENTS.
F. PROVIDE AND INSTALL ALL GROUNDING AND APPURTENANCES AS SHOWN ON THE DRAWINGS AND AS SPECIFIED HEREIN.
G. FURNISH AND INSTALL COMPLETE INSTRUMENTATION AND PROCESS CONTROL SYSTEMS AS DESCRIBED AND SPECIFIED HEREIN AND AS SHOWN ON THE CONTRACT DRAWINGS.
H. FURNISH AND INSTALL ALL INSTRUMENTATION DEVICES, CONVERTERS, POWER SUPPLIES AND OTHER APPURTENANCES REQUIRED FOR A COMPLETE SYSTEM.

1.02 QUALITY ASSURANCE

A. IN GENERAL, THE WORKMANSHIP OF THE ELECTRICAL INSTALLATION SHALL BE AS DESCRIBED IN THE N.E.C.A. ELECTRICAL DESIGN GUIDELINES. ALL METHODS OF CONSTRUCTION, DETAILS OF WORKMANSHIP, ETC. THAT ARE NOT SPECIFICALLY DESCRIBED THEREIN OR INDICATED IN THE CONTRACT DOCUMENTS, SHALL BE SUBJECT TO THE CONTROL AND APPROVAL OF THE ENGINEER.

1.03 SUBMITTALS

A. SUBMIT VENDOR DATA FOR PERFORMANCE, FUNCTIONS, MATERIALS, AND OPERATION FOR ALL PRODUCTS LISTED IN PART 2 – PRODUCTS. WHERE APPLICABLE, SUBMIT OPERATION AND MAINTENANCE MANUALS.
B. UPON COMPLETION OF PROJECT, SUBMIT AS-CONSTRUCTED DRAWINGS SHOWING ACTUAL LOCATION OF DEVICES AND WIRING. SUBMIT IN AUTOCAD DRAWING FORMAT.

PART 2 – PRODUCTS

2.01 MATERIALS

A. CONDUIT
1. RIGID HEAVY WALL STEEL CONDUIT (RSC OR RGS) SHALL BE CONSTRUCTED OF HOT DIPPED GALVANIZED OR ELECTRO-GALVANIZED STEEL. ACCEPTABLE MANUFACTURERS: REPUBLIC, TRIANGLE PWC, ALLIED, WHEATLAND.
2. PVC CONDUIT SHALL BE SCHEDULE 80. MANUFACTURERS: CARLON, HUBBELL, CANTEX, SOUTHERN PIPE.
3. ALL FITTINGS SHALL BE OF THE SAME MATERIAL AS THE RESPECTIVE RACEWAY SYSTEM.
4. FITTINGS FOR SEALING AROUND CONDUITS PASSING THROUGH NEW BELOW-GRADE CONCRETE WALLS SHALL BE O.Z./GEDNEY CO. TYPE FSK, OR EQUIVALENT.

B. CONDUCTORS AND CABLE
1. UNLESS SHOWN OTHERWISE ON THE DRAWINGS, ALL POWER CONDUCTORS SHALL BE INSULATED FOR 600 VOLTS AND SHALL BE STANDARD AWG AND MCM SIZES. CONDUCTORS SHALL BE 98 PERCENT COPPER, STRANDED, HEAT AND MOISTURE RESISTANT AND THERMAL PLASTIC INSULATED FOR ALL SIZES NO. 12 AWG AND LARGER. CONDUCTORS SHALL BE LABELED WITH U.L. APPROVAL AND BE MARKED WITH THE MANUFACTURER'S NAME, WIRE SIZE AND INSULATION TYPE. INSULATION FOR ALL 600 VOLT CONDUCTORS SHALL BE TYPE THWN/THHN OR TYPE XHHW. ALL WIRING SHALL BE SUITABLE FOR WET, WATER-FILLED APPLICATIONS. ACCEPTABLE MANUFACTURERS: OKONITE, SOUTHWIRE, PIRELLI, CABLEC, BIW.
2. ALL DISCRETE CONTROL CONDUCTORS SHALL BE INSULATED FOR 600 VOLTS, UNLESS OTHERWISE NOTED, AND SHALL BE NO. 14 AWG MINIMUM SIZE. CONDUCTORS SHALL BE 98 PERCENT COPPER, STRANDED, HEAT AND MOISTURE RESISTANT, AND THERMAL PLASTIC INSULATED. ACCEPTABLE MANUFACTURERS: OKONITE, SOUTHWIRE, PIRELLI.
3. ALL ANALOG CONTROL WIRING CONDUCTORS SHALL BE INSULATED FOR 250 VOLTS, UNLESS OTHERWISE NOTED, AND SHALL BE 2/C#16 TWISTED SHIELDED PAIR (TSP). ACCEPTABLE MANUFACTURERS: BELDEN, SOUTHWIRE, AMERICAN INSULATED WIRE CORP, GENERAL CABLE.

C. OUTLET BOXES
1. OUTLET BOXES EXPOSED TO MOISTURE SHALL BE CADMIUM CAST ALLOY COMPLETE WITH HUBS AND GASKETED SCREW FASTENED COVERS. ACCEPTABLE MANUFACTURERS: STEEL CITY, APPLETON, CROUSE-HINDS, RACO.

D. PULL AND JUNCTION BOXES
1. BOXES SHALL BE SUITABLE FOR SURFACE MOUNTING IN ACCORDANCE WITH THE LOCATION TO BE INSTALLED. BOXES INSTALLED IN DAMP LOCATIONS SHALL BE OF WATERTIGHT CONSTRUCTION WITH GASKETED COVER AND CONDUIT HUBS.

E. WIRING DEVICES
1. WIRING DEVICES SHALL BE SPECIFICATION GRADE AS DESCRIBED HEREIN. PROVIDE IN-USE COVER PLATES FOR RECEPTACLES AND SWITCHES. ACCEPTABLE MANUFACTURERS: HUBBELL, GENERAL ELECTRIC, ARROW-HART, PASS AND SEYMOR, BRYANT.
2. TOGGLE SWITCHES
   a. 20 AMPERE, 1-POLE, 240 VOLT: HUBBELL 1221
   b. 20 AMPERE, 3-WAY, 220 VOLT: HUBBELL 12233.
3. RECEPTACLES
   a. 20 AMPERE, 125 VOLT, DUPLEX G.F.I. RECEPTACLE: HUBBELL GF-5362
   b. 20 AMPERE, 125 VOLT, DUPLEX, WEATHERPROOF: CROUSE HINDS WLRD-1 WITH GFI RECEPTACLE AND IN-USE COVER.

F. SAFETY SWITCHES
1. FURNISH AND INSTALL 600-VOLT, HEAVY-DUTY SAFETY SWITCHES AS INDICATED ON THE PLANS. SWITCHES SHALL BE THREE-POLE OR SINGLE POLE, SINGLE THROW AS INDICATED ON THE PLANS, FUSIBLE OR NON-FUSIBLE AS INDICATED. ALL SAFETY SWITCHES SHALL BE NEMA TYPE HD AND UL LISTED. ENCLOSURE SHALL BE RATED NEMA 3R. SERVICE ENTRANCE RATED, WITH GROUND LUG. ACCEPTABLE MANUFACTURERS: SQUARE D, EATON, CUTLER-HAMMER, SIEMENS, GENERAL ELECTRIC.

G. GROUNDING MATERIALS
1. PROVIDE EQUIPMENT GROUNDING AS SHOWN ON THE DRAWINGS
2. PROVIDE GROUNDING CONDUCTORS FROM GROUND ELECTRODES TO EQUIPMENT.
3. DO NOT USE CONDUIT AS THE GROUND AND/OR BONDING CONDUCTOR.
4. BOND GROUND TERMINAL OF RECEPTACLES TO OUTLET BOXES WITH #12 AWG GREEN INSULATED WIRE.
5. GROUND CONDUIT SYSTEM AND NEUTRAL CONDUCTOR OF WIRING SYSTEM WITH A CONNECTION AT THE MAIN ELECTRICAL SERVICE.
6. GROUND RODS
   a. GROUND RODS SHALL BE COPPER-CLAD STEEL, 3/4-INCH IN DIAMETER AND 10 FEET LONG. THE RODS SHALL HAVE A HARD, CLEAN, SMOOTH, CONTINUOUS, SURFACE THROUGHOUT.

H. HEAT TRACING EQUIPMENT
1. HEATING CABLE
   a. SELF REGULATING WITH A NOMINAL POWER OUTPUT OF 5 W/FT.
   b. TEMPERAUTE ID NUMBER OF T6, 185 DEG F, CONSISTENT WITH NEC.
   c. MINIMUM BEND RADIUS OF 0.5" AT 68 DEG F.
   d. EQUAL TO RAYCHEM 5BTV.
2. END SEAL KIT
   a. COMPATIBLE WITH BTV-CT HEAT CABLE.
   b. ABOVE INSTALLATION MOUNTED END SEAL WITH RED LED SIGNAL LIGHT.
   c. INGRESS PROTECTION NEMA 4X
   d. EQUAL TO RAYCHEM E-100-L2-A.
3. SINGLE ENTRY POWER KIT
   a. FOR USE WITH CONDUIT.
   b. COMPATIBLE WITH BTV-CT HEAT CABLE.
   c. INGRESS PROTECTION NEMA 4X
   d. MAXIMUM CONDUCTOR SIZE – 8 AWG.
   e. EQUAL TO RAYCHEM JBS-100-A.
4. CONTROL SYSTEM
   a. NEMA 4X PROTECTION.
   b. RELATIVE HUMIDITY – 0% TO 90%, NONCONDENSING
   c. RELAY TYPES – 2-POLE, SOLID STATE, NORMALLY OPEN
   d. VOLTAGE, MAXIMUM – 120VAC NOMINAL, 50/60 HZ
   e. CURRENT, MAXIMUM – 30A @ 104°F
   f. CONTROL ALGORITHMS – LINE SENSING ON/OFF, PROPORTIONAL, PROPORTIONAL AMBIENT, POWER LIMITING, SOFT START
   g. EQUAL TO DIGITRACE 920 SSR
5. AMBIENT TEMPERATURE THERMOSTAT
   a. ENCLOSURE – NEMA 4X, CAST ALUMINUM, POLYURETHANE COATED
   b. SET POINT RANGE – -40°F TO 140°F
   c. SENSOR MATERIAL – 300 STAINLESS STEEL
   d. SENSOR TYPE – FIXED FLUID-FILLED BULB AND CAPILLARY
   e. ELECTRICAL RATING – 22A AT 120-480VAC
   f. CONDUIT ENTRY – 3/4" NPT CONDUIT HUB
   g. EQUAL TO DIGI-TRACE AMC-1A

I. LEVEL SWITCHES
1. MERCURY-FREE, POLYPROPYLENE HOUSING FLOAT SWITCH, TETHERED MOUNTING. 10A, 250VAC RATED SWITCH. EQUAL TO W.E. ANDERSON SERIES FSW.
2. NORTHEAST FLUID CONTROL MODEL 7010-A-4-20 WIDE ANGLE FLOAT, PUMP DOWN OR EQUAL.

J. LEVEL TRANSMITTERS
1. NORTHEAST FLUID CONTROL MODEL LU81-5101 ECHO SPAN 2-WIRE. 16.4 FOOT RANGE, DISPLAY, 2 INCH NPT, NEMA 4X.

K. FLOW METER
1. ULTRASONIC CLAMP ON FLOW METER FOR 0.5" PVC PIPE. FLOW RANGE 0.5 GPM TO 2 GPM. FLOW RATE AND TOTALIZER DISPLAY. TOTALIZER DISPLAY IN THOUSANDS OF GALLONS. 4-20 mA OUTPUT SIGNAL. SUITABLE FOR ENVIRONMENT. COORDINATE PIPE REQUIREMENTS WITH MECHANICAL. EQUAL TO DYNASONICS TXFL SERIES.

L. AUTO DIALER
1. FOUR CHANNEL INPUT, 4 CUSTOM VOICE CALLOUTS, 1 CONTACT OUTPUT. EQUAL TO SENSAPHONE 400 MODEL.

M. PLC CONTROLLER
1. ALL INPUTS SHALL TERMINATE AT PLC IN MAIN CONTROL PANEL. PLC SHALL ACTIVATE ALL OUTPUT NOTIFICATION DEVICES. .
2. MIN. MEMORY: 16 KILOBYTES OF PROGRAMMABLE RAM MEMORY AND 8K OF DATA STORAGE WITH EEPROM BACKUP.
3. MIN. NUMBER OF I/O POINTS (DISCRETE OR ANALOG): 960
4. POWER: 110/220 VAC POWER SUPPLY. THE PLC SHALL BE CONNECTED TO AN UNINTERRUPTIBLE POWER SUPPLY (UPS).
5. REQUIRED AGENCY APPROVALS: UL LISTED (UL 508), CSA CERTIFIED (CSA 142).
6. EXTERNAL COMMUNICATIONS VIA RS-232/485/ETHERNET PORTS.
7. PROGRAMMING AND DIAGNOSTIC SOFTWARE SHALL BE IBM-COMPATIBLE (WINDOWS BASED) VIA RELAY LADDER LOGIC (RLL), BASIC, AND CUSTOM PROGRAMMING TOOLS FOR THE PLC. PROVIDE TO THE ENGINEER AND OWNER A LICENSED COPY OF ALL PROGRAMMING SOFTWARE USED TO CONFIGURE AND PROGRAM THE PLC AND PC. THE SOFTWARE SHALL INCLUDE BOTH THE SOFTWARE AND HARDWARE (I.E. CABLES, INTERFACE BOX, ETC.) REQUIRED FOR DIRECT PLC-TO-PC COMMUNICATIONS FOR PLC PROGRAMMING. ALL SOFTWARE SHALL BE PROVIDED ON CD ROM. A COPY OF THE PLC PROGRAM SHALL BE PROVIDED TO THE ENGINEER AND OWNER. ALL PLCS SHALL BE PROGRAMMABLE AND OPERATE ON THE SAME SOFTWARE LICENSE.
8. PROVIDE PROGRAMMING TIME REQUIRED TO CONFIGURE PLC TO PROVIDE COMPLETE CONTROL AND MONITORING FUNCTIONS AS DESCRIBED IN DRAWINGS AND DESCRIBED HEREIN.
9. THE EXTRACTION PUMP SHALL OPERATE CONTINUOUSLY. THE FOLLOWING DEVICES SHALL STOP THE EXTRACTION PUMP IMMEDIATELY AND INITIATE THE PLC SEQUENCE FOR ALARM CONDITION; VAULT SUMP HIGH LEVEL SWITCH, STORAGE TANK CONTAINMENT HIGH LEVEL, INSPECTION/CLEANOUT MANHOLES HIGH LEVEL, STORAGE TANK HIGH HIGH LEVEL. ONCE THE PUMP IS STOPPED BY AN ALARM CONDITION IT CAN ONLY BE RESTARTED MANUALLY AT THE CONTROL PANEL. THE PUMP WILL ONLY START WHEN ALL ALARMS ARE CLEAR. WHEN THE COMMON ALARM IS ACTIVATED, THE PLC SHALL INITIATE THE AUTODIALER
10. PLC SHALL BE ALLEN-BRADLEY MICROLOGIX 1100 OR EQUAL.
11. PROVIDE ALLEN-BRADLEY PANELVIEW 500 OR EQUAL, FOR TANK LEVEL READOUTS, FLOW TOTALS, PRESSURE INDICATION AND ALARM INDICATION/ACKNOWLEDGEMENT.

N. CONTROL PANEL HARDWARE
1. ALL ALARM INDICATING DEVICES SHALL BE PILOT LIGHT LED TYPE, SHALL BE THROUGH-DOOR TYPE SEALED WITH EQUIPMENT MANUFACTURERS RECOMMENDATIONS.
2. ALL H-O-A SWITCHES AND PUSH BUTTON SWITCHES, SHALL BE THROUGH-DOOR FLUSH MOUNTED AND SEALED IN ACCORDANCE WITH RESPECTIVE EQUIPMENT AND CONTROL PANEL MANUFACTURERS RECOMMENDATIONS

O. WEATHERHEAD
1. FURNISH AND INSTALL A THREADED, CAST-ALUMINUM, WIRE ENTRANCE CAP (WEATHERHEAD) AT LOCATIONS INDICATED ON THE PLANS. WEATHERHEAD SHALL HAVE FIVE POWER CONDUCTOR OPENINGS AND ONE GROUND CONDUCTOR OPENING. ACCEPTABLE MANUFACTURERS: APPLETON (F200), EATON, CUTLER-HAMMER, SQUARE D, SIEMENS.

P. AERIAL CABLE
1. FURNISH AND INSTALL 600-VOLT TRIPLEX SERVICE DROP AERIAL CONDUCTORS WITH INTEGRAL MESSENGER CABLE. CONDUCTORS SHALL BE SIZED AS INDICATED ON THE PLANS AND SHALL BE SUITABLE FOR EXTERIOR INSTALLATIONS. CONDUCTORS SHALL BE ALUMINUM WITH XLPE PVC INSULATION, 75-DEGREE C. MESSENGER CABLE SHALL BE USED AS THE GROUNDING CONDUCTOR AND SHALL BE GROUNDED TO THE EXISTING SYSTEM GROUND AND TO THE NEW GROUND ROD AND SERVICE EQUIPMENT. ACCEPTABLE MANUFACTURERS: SOUTHWIRE, OKONITE, GENERAL CABLE, SERVICE WIRE CO., AMERICAN INSULATED WIRE CORP.

Q. TREATED WOOD UTILITY POLES
1. FURNISH AND INSTALL TREATED WOOD UTILITY POLES AT LOCATIONS INDICATED. POLES SHALL BE CLASS 3, 40' MINIMUM, TAPERED SOUTHERN PINE WITH PRESERVATIVE TREATMENT. MINIMUM TIP CIRCUMFERENCE SHALL BE 23-INCHES. POLES SHALL BE LABELED WITH SUPPLIER'S CODE OR TRADEMARK, PLANT AND YEAR OF TREATMENT, POLE SPECIES AND PRESERVATIVE USED AND CIRCUMFERENCE CLASS AND LENGTH. ACCEPTABLE MANUFACTURERS: APACHE FOREST PRODUCTS, NORTH PACIFIC GROUP INC., POWERTECH EQUIPMENT INC.

R. FUSES
1. FURNISH AND INSTALL NEW CLASS RK5, DUAL ELEMENT, TIME-DELAY 600-VOLT RATED FUSES IN EXISTING 400-AMP FUSED DISCONNECT SWITCHES AND SAFETY SWITCHES AS INDICATED ON THE DRAWINGS. FUSES SHALL BE NON-RENEWABLE CARTRIDGE TYPE. PROVIDE REDUCERS IF REQUIRED TO INSTALL FUSES IN EXISTING SPACE. ACCEPTABLE MANUFACTURERS: COOPER BUSSMAN, FERRAZ SHAWMUT, LITTELFUSE, INC.

S. WIREWAY
1. FURNISH AND INSTALL A NEMA 3R WIREWAY IN LOCATION INDICATED ON THE DRAWINGS. WIREWAY SHALL BE GANGABLE, OUTDOOR RAINTIGHT WITH DRIP SHIELD. MANUFACTURED FROM GALVANIZED STEEL WITH GRAY POLYESTER FINISH, GASKETED END PLATES, GASKETED COVER WITH MOUNTING CLAMPS AND WALL-MOUNTING HARDWARE. UL LISTED AS STEEL ENCLOSED WIREWAY. ACCEPTABLE MANUFACTURERS: SQUARE D, EATON, CUTLER-HAMMER, SIEMENS.

T. ELECTRICAL HANDHOLE
1. FURNISH AND INSTALL AN ELECTRICAL HANDHOLE, LOAD RATED A8, AT LOCATIONS INDICATED ON THE DRAWINGS. HANDHOLE SHALL BE STACKABLE COMPOSITE TYPE WITH OPEN BOTTOM AND GASKETED TOP COVER. TWO HANDHOLES AND ONE COVER ARE REQUIRED AT EACH LOCATION. PROVIDE WITH TAMPER-PROOF BOLTS. ACCEPTABLE MANUFACTURERS: QUAZITE, SHAKESPHERE, GALLOWAY.

U. CELLULAR TERMINAL
1. FURNISH AND INSTALL A FIXED CELLULAR TERMINAL IN MAIN CONTROL PANEL. UNIT SHALL BE 200mW, 800MHz WITH DUAL RJ-11 PHONE JACKS, DIPOLE ANTENNA, LED STATUS INDICATORS. ACCEPTABLE MANUFACTURER: TELULAR MODEL SX5T-505C OR APPROVED EQUAL.

PART 3 – EXECUTION

3.01 INSTALLATION

A. UNLESS OTHERWISE NOTED, WIRING FOR ALL SYSTEMS INDICATED IN THE CONTRACT DOCUMENTS SHALL CONSIST OF INSULATED CONDUCTORS INSTALLED IN RACEWAYS. RACEWAYS SHALL BE CONTINUOUS FROM OUTLET BOX TO OUTLET BOX AND FROM OUTLET BOX TO CABINET, JUNCTION OR PULL BOX. SECURE AND BOND RACEWAYS TO ALL BOXES AND CABINETS SUCH THAT EACH SYSTEM OF RACEWAYS WILL BE ELECTRICALLY CONTINUOUS THROUGHOUT.
B. INSTALL ALL CONDUCTORS IN THE FOLLOWING APPLICABLE RACEWAY SYSTEM:
1. CONDUCTORS 600 VOLTS OR LESS IN OUTDOOR, ABOVE GRADE LOCATIONS: GALVANIZED RIGID HEAVY WALL STEEL CONDUIT.
2. CONDUCTORS 600 VOLTS OR LESS IN WET LOCATIONS: GALVANIZED RIGID HEAVY WALL STEEL CONDUIT.
3. CONDUCTORS 600 VOLTS OR LESS IN BELOW-GRADE LOCATIONS: PVC SCHEDULE 80 PLASTIC CONDUIT.
4. WATER-TIGHT, FLEXIBLE METAL CONDUIT SHALL BE USED FOR FINAL CONNECTION TO ALL MOTORS, ROTATING OR VIBRATING EQUIPMENT. MAXIMUM LENGTH OF FLEXIBLE CONDUIT SHALL BE 36 INCHES.

C. RACEWAYS:
1. SIZE AS INDICATED ON THE DRAWINGS. WHERE SIZES ARE NOT INDICATED, RACEWAYS SHALL BE SIZED PER THE NATIONAL ELECTRICAL CODE IN ACCORDANCE WITH THE QUANTITY, SIZE, TYPE AND INSULATION OF CONDUCTORS TO BE INSTALLED.
2. POWER RACEWAYS SHALL BE MINIMUM THREE-QUARTER (3/4") TRADE SIZE.
3. CONDUITS TO INSTRUMENTATION DEVICES SHALL BE SIZED TO ACCOMODATE THE DEVICE CONNECTIONS. MINIMUM HALF-INCH (1/2") TRADE SIZE.
4. INSTALL TO PROVIDE ADEQUATE GROUNDING BETWEEN ALL OUTLETS AND THE ESTABLISHED ELECTRICAL SYSTEM GROUND.
5. CUT RACEWAYS SQUARE, REMOVE BURRS FORMED BY FIELD CUTTING OR DURING MANUFACTURING. BUSH WHERE NECESSARY.
6. INSTALL WITH EXTERIOR SURFACES NOT LESS THAN SIX INCHES (6") FROM ANY SURFACE WITH A TEMPERATURE OF 200 DEGREES F OR HIGHER.
7. PLUG THE ENDS OF EACH ROUGHED-IN RACEWAY WITH AN APPROVED CAP OR DISC TO PREVENT THE ENTRANCE OF FOREIGN MATERIALS DURING CONSTRUCTION
8. INSTALL PARALLEL OR PERPENDICULAR TO FLOORS, WALLS AND CEILINGS.
9. ARRANGE IN A NEAT MANNER FOR ACCESS AND ALLOW FOR ACCESS TO WORK INSTALLED BY OTHER TRADES.
10. PROVIDE A BUSHING AT EACH CONDUIT TERMINATION, UNLESS FITTING AT BOX WHERE CONDUIT TERMINATES AT HUBS, DESIGNED IN SUCH A MANNER TO AFFORD EQUIVALENT PROTECTION TO CONDUCTORS. PROVIDE GROUNDING TYPE INSULATED BUSHINGS ON ALL CONDUIT SIZES ONE AND ONE-QUARTER INCH (1-1/4") TRADE SIZE AND LARGER, AND ON ALL FEEDER RACEWAYS REGARDLESS OF SIZE. PROVIDE STANDARD BUSHINGS FOR CONDUITS ONE INCH (1") AND SMALLER UNLESS OTHERWISE STATED. PROVIDE SEALING BUSHINGS FOR ALL CONDUITS ENTERING FROM BELOW GRADE.

D. BECOME FAMILIAR WITH THE GENERAL CONSTRUCTION OF THE SITE AND PLACE SLEEVES, INSERTS, ETC., AS REQUIRED. ALL PENETRATIONS THROUGH NEW BELOW-GRADE CONCRETE WALLS OR FLOORS SHALL BE SEALED USING FITTINGS AS SPECIFIED IN ABOVE.

E. WIRING METHODS
1. DO NOT PULL CONDUCTORS INTO RACEWAYS UNTIL RACEWAY SYSTEM, INCLUDING ALL OUTLETS, CABINETS, BUSHINGS AND FITTINGS, IS COMPLETED. VERIFY THAT ALL WORK OF OTHER TRADES WHICH MAY CAUSE CONDUCTOR DAMAGE IS COMPLETED. USE ONLY U.L. APPROVED CABLE LUBRICANTS WHEN NECESSARY. DO NOT USE MECHANICAL MEANS TO PULL CONDUCTORS.
2. CONDUCTORS SHALL BE THE SAME SIZE FROM THE LAST PROTECTIVE DEVICE TO THE LOAD.
3. ALL WIRING SYSTEMS SHALL BE PROPERLY GROUNDED AND CONTINUOUSLY POLARIZED THROUGHOUT, FOLLOWING STANDARD COLOR CODING.
4. FOR SPLICES AND TAPS, NO. 10 AWG AND SMALLER, USE SOLDERLESS "THREAD-ON" CONNECTORS HAVING SPIRAL STEEL SPRING AND INSULATED WITH A VINYL CAP AND SKIRT, AS MANUFACTURED BY 3M CO. (PRE- INSULATED "SCOTCH-LOCK") OR IDEAL ("WING-NUTS").
5. FOR SPLICES AND TAPS, NO. 8 AND LARGER, USE SOLDERLESS "SPLIT BOLT" TYPE CONNECTOR AS MANUFACTURED BY ANDERSON, BURNDY, KEARNEY, THOMAS & BETTS, OR APPROVED EQUAL.
6. USE CAST CONNECTIONS, CADWELD OR THERMOWELD, FOR GROUND CONDUCTORS.
7. MAKE ALL SPLICES AND CONNECTIONS IN ACCESSIBLE BOXES AND CABINETS ONLY.
8. AT RECEPTACLE AND SWITCH BOXES, LEAVE A MINIMUM OF EIGHT INCHES (8") FREE CONDUCTOR FOR INSTALLATION OF DEVICES.
9. INSTALL HEAT TRACE CABLES, EQUIPMENT AND CONNECTIONS PER MANUFACTURERS REQUIREMENTS.

F. OUTLET BOXES
1. LOCATION OF OUTLETS SHOWN ON DRAWINGS IS APPROXIMATE ONLY. LOCATE OUTLET SO THAT WHEN PLACED IN POSITION, OUTLET WILL SERVE ITS DESIRED PURPOSE WITHOUT INTERFERING.
2. OUTLET BOXES SHALL BE MINIMUM 4 INCHES SQUARE, 1-1/2 INCHES DEEP, GALVANIZED SHEET METAL.
3. SURFACE MOUNTED OUTLET BOXES SHALL BE CAST TYPE WITH THREADED HUBS AND GASKETED COVER PLATES SECURED BY NON-FERROUS SCREWS.
4. INSTALL LOCKABLE IN-USE COVER PLATES ON ALL EXTERIOR RECEPTACLES AND SWITCHES.

G. JUNCTION AND PULL BOXES
1. INSTALL JUNCTION AND PULL BOXES IN READILY ACCESSIBLE LOCATIONS. ACCESS TO BOXES SHALL NOT BE BLOCKED BY EQUIPMENT, PIPING, DUCTS AND THE LIKE. PROVIDE ALL NECESSARY JUNCTION OR PULL BOXES REQUIRED DUE TO FIELD CONDITIONS AND AS REQUIRED BY THE NATIONAL ELECTRICAL CODE.

H. HANGERS AND SUPPORTS
1. PROVIDE STEEL ANGLES, CHANNELS AND OTHER MATERIALS NECESSARY FOR THE PROPER SUPPORT AND ERECTION OF EQUIPMENT.

I. GROUNDING INSTALLATION
1. MAKE CONNECTIONS TO GROUND RODS WITH AN EXOTHERMIC WELDING PROCESS. MECHANICAL CONNECTIONS MAY BE MADE AT EQUIPMENT ONLY.
2. ENSURE THAT A GROUND LOOP IS NOT FORMED BETWEEN EQUIPMENT GROUND IN ELECTRICAL CONDUIT AND GROUNDING ELECTRODE CONDUCTORS DIRECTLY CONNECTED TO GROUND ELECTRODES.
3. EQUIP EXPOSED "PIGTAILS" OR GROUNDING ELECTRODE CONDUCTORS WITH AN ARMORED SHEATH.
4. GROUP AND BOND GROUND WIRES TO PANELS, BOXES, RECEPTACLES, ETC., NOT TO SYSTEM NEUTRAL.
5. MAKE CONNECTION TO VAULT HATCH COVERS WITH A SUITABLE GROUND CLAMP OR LUG CONNECTION.

3.02 TESTS

A. BRANCH CIRCUITS SHALL BE TESTED DURING INSTALLATION FOR CONTINUITY AND IDENTIFICATION AND SHALL PASS OPERATIONAL TESTS TO DETERMINE THAT ALL CIRCUITS PERFORM THE FUNCTION FOR WHICH THEY ARE DESIGNED.

SEQUENCE OF OPERATIONS

A. NORMAL OPERATION

REFERENCE D-601 FOR DEVICE LOCATION IN PROCESS.

ALL ALARMS MUST BE CLEAR TO BEGIN OPERATION.

THE EXTRACTION PUMP SHALL BEGIN OPERATION WHEN THE OPERATOR PRESSES THE RESET PUSHBUTTON ON CONTROL PANEL.

WHILE NORMAL OPERATION CONTINUES FLOW TOTALIZER FQI-100A SHALL TOTALIZE THE QUANTITY OF PUMPED PRODUCT FROM INCEPTION. FQI-100A SHALL NOT BE RESETABLE. FLOW TOTALIZER FQI-100B SHALL TOTALIZE THE CURRENT BATCH PUMPED TO THE TANKS. FQ101B SHALL BE CONFIGURABLE AND RESETABLE BY THE OPERATOR.

B. WARNING CONDITION

YAH-100, LAH-200, YAH-200, YAH-201, LAH-101, LAH-102, LAH-103 AND LAH-104 SHALL INITIATE THE AUTO-DIALER WARNING CONDITION. WARNING CONDITIONS SHALL NOT SHUT OFF THE EXTRACTION PUMP. WARNING CONDITIONS SHALL NOTIFY OF PENDING STORAGE TANK FULL, TANK HEATER FAULT.

WHILE IN ALARM OR WARNING STATUS, THE AUTODIALER WILL CONTINUE TO CALL OUT UNTIL ACKNOWLEDGED.

C. ALARM CONDITION

THE EXTRACTION PUMP SHALL CONTINUE TO OPERATE UNTIL ONE OR MORE OF THE FOLLOWING CONDITIONS EXISTS:

1. E-STOP HS-200, HS-103 OR HS-100 IS PRESSED.
2. FQI-100B REACHES THE BATCH SETPOINT. BATCH SETPOINT IS SET BY THE OPERATOR ON CONTROL PANEL.
3. PAH-100 EXISTS. (LINE PRESSURE IS TOO HIGH)
4. LAH-100 EXISTS. (EXTRACTION WELL SUMP IS AT HIGH LEVEL)
5. LAHH-200 EXISTS. (TANK OVERFILLED)
6. LAH-105 IS ACTIVE. (HIGH LEVEL INTERNAL TO EXTRACTION PUMP-HOSE BREAK)
7. FAL-100 OR FAH-100 EXISTS. (LOW OR HIGH FLOW OCCURS IN THE DAPL CARRIER PIPE LINE).
8. LAH-201 EXISTS. (TANK HAS A LEAK)

EACH CONDITION ABOVE SHALL SHUTDOWN THE EXTRACTION PUMP AND INITIATE THE AUTO-DIALER ALARM CONDITION. THE SYSTEM WILL REMAIN INOPERABLE UNTIL ALL ALARM CONDITIONS ARE CLEAR AND THE RESET PUSHBUTTON ON THE CONTROL PANEL HAS BEEN ACTIVATED.

ALL WARNING AND ALARM SIGNALS SHALL ACTIVATE A STROBE AT THE MAIN CONTROL PANEL.

This drawing is the property of MACTEC Engineering and Consulting, Inc. including all patented and patentable features, and/or confidential information and its use is conditioned upon the users agreement not to reproduce the drawing, in whole or part, nor the material described thereon, nor the use of the drawing for any purpose other than specifically permitted in writing by MACTEC Engineering and Consulting, Inc.

3-4-2011

NO.	DATE	REVISIONS	BY	CHK
2	03/09/11	ISSUED FOR CONSTRUCTION	REO	MAP
1	02/12/10	FINAL	REO	MAP
0	12/07/09	ISSUED FOR BID	REO	BDE
A	11/12/09	FOR CLIENT REVIEW	REO	BDE

DRAWN: BDE	PROJECT NO: 6107-10-0016
ENGINEER: BDE	SCALE: NONE
CHECKED: REO	APPROVED: PHT
DATE: 03/09/11	DATE: 03/09/11

MACTEC
Engineering and Consulting, Inc.
P.O. Box 7050, 511 Congress Street
Portland, ME 04112-7050
(207) 775-5401

DAPL EXTRACTION PILOT TEST
OLIN CHEMICAL SUPERFUND SITE
WILMINGTON, MASSACHUSETTS

ELECTRICAL

ELECTRICAL SPECIFICATIONS AND SEQUENCE OF OPERATIONS

DRAWING NO: E-602

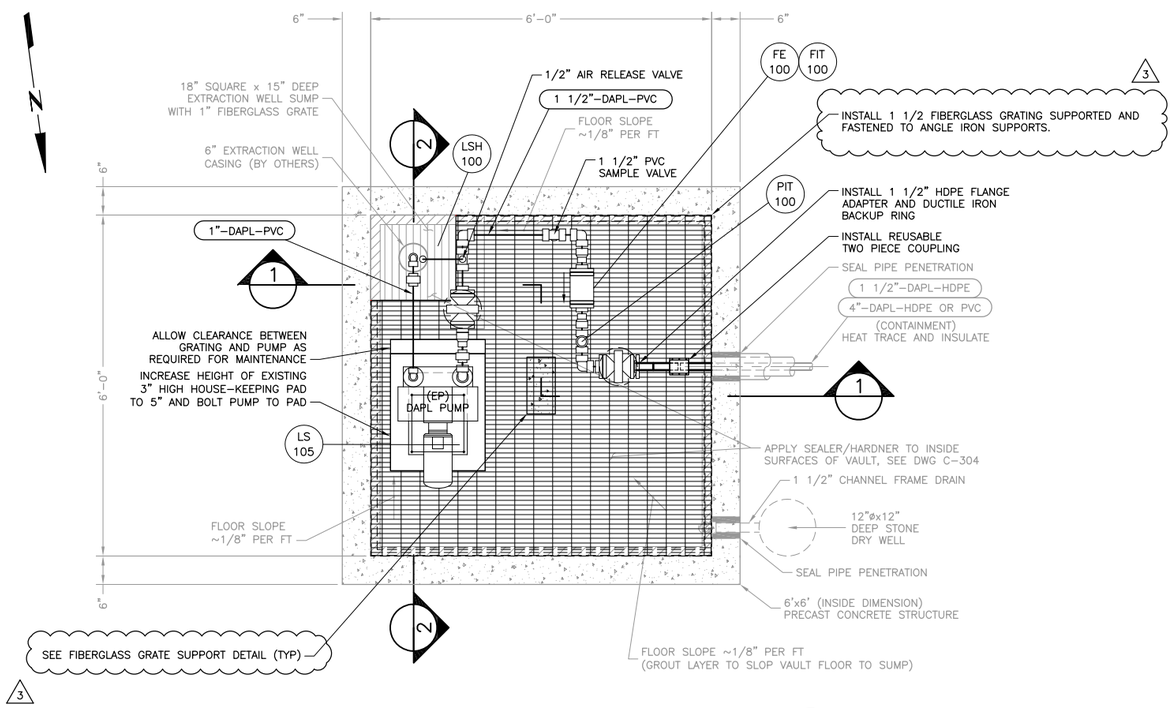

PUMP ENCLOSURE VAULT FLOOR PLAN DETAIL (A)
NTS
C-101 | C-301

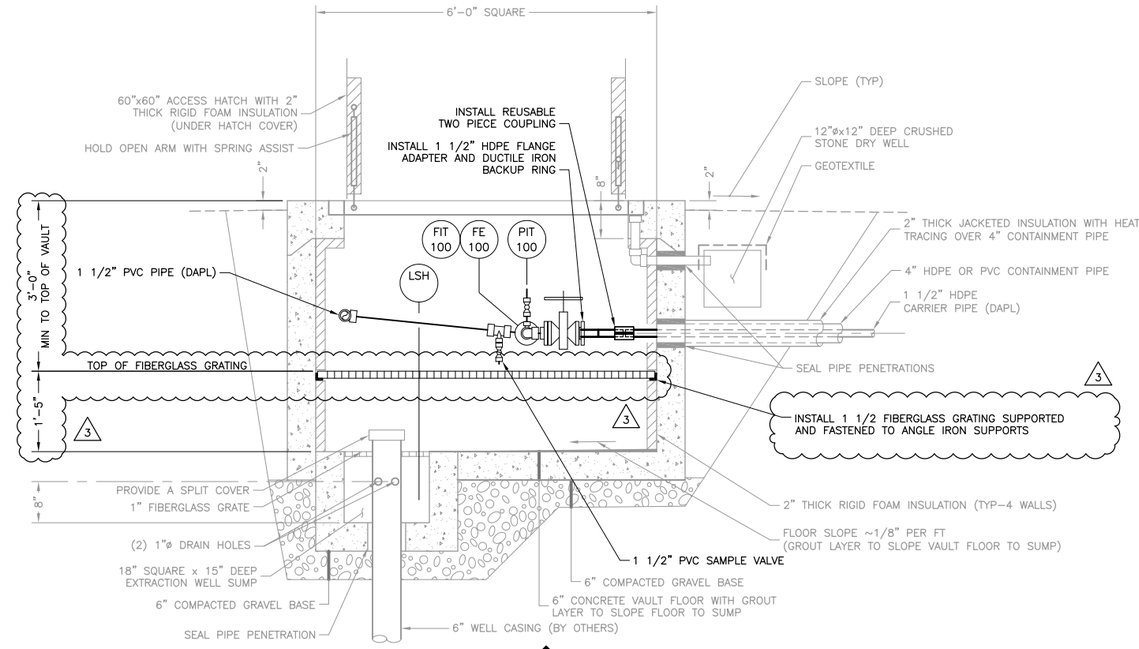

SECTION (1)
NTS

NOTE:
1" MINIMUM CLEAR SPACE BETWEEN ALL PIPING AND CLOSED HATCH COVER.

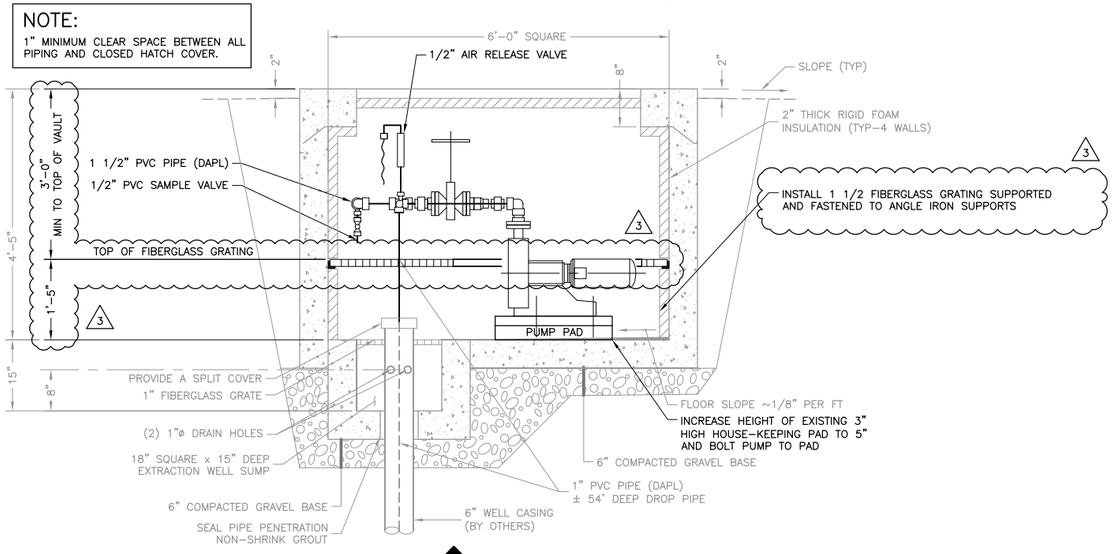

SECTION (2)
NTS

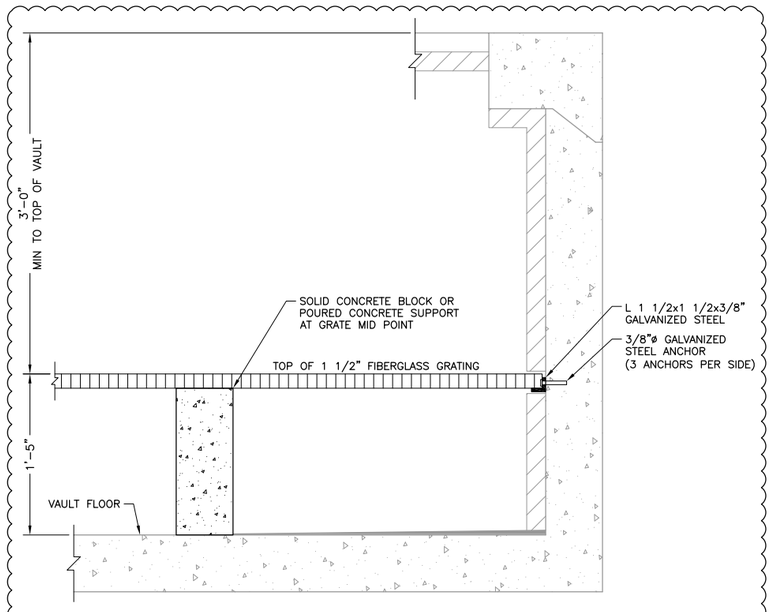

FIBERGLASS GRATING SUPPORT DETAIL (3)
NTS

This drawing is the property of MACTEC Engineering and Consulting, Inc. including all patented and patentable features, and/or confidential information and its use is conditioned upon the users agreement not to reproduce the drawing, in whole or part, nor the material described thereon, nor the use of the drawing for any purpose other than specifically permitted in writing by MACTEC Engineering and Consulting, Inc.

NO.	DATE	REVISIONS	BY	CHK
3	07/16/2012	ATTACHED GRATING SUPPORTS REVISED	DEL	MAP
2	06/08/12	ATTACHED GRATING SUPPORTS TO VAULT FLOOR	DEL	MAP
1	05/18/12	FIELD CHANGE 1	DEL	MAP

DRAWN: DEL	PROJECT NO: 6107-10-0016
ENGINEER: MAP	SCALE: NONE
CHECKED: REO	APPROVED: PHT
DATE: 05/18/12	DATE: 05/18/12

MACTEC
Engineering and Consulting, Inc.
P.O. Box 7050, 511 Congress Street
Portland, ME 04112-7050
(207) 775-5401

DAPL EXTRACTION PILOT TEST
OLIN CHEMICAL SUPERFUND SITE
WILMINGTON, MASSACHUSETTS

CIVIL
PUMP ENCLOSURE VAULT
PLAN DETAIL AND SECTIONS

DRAWING NO: FC1
1 / 1

P:\Projects\CADD-FORT\Projects\Olin-Wilmington\FC1.dwg Mon, 16 Jul 2012 - 2:43pm david.lawrence

APPENDIX B
WELL INSTALLATION CONSTRUCTION DIAGRAMS

WELL CONSTRUCTION DIAGRAM

LOCATION ID: EW-1

Project Name:	Olin Chemical Superfund Site	Date Started:	12/5/2011
Project Location:	Wilmington, MA	Date Completed:	12/6/2011
Project Number:	6107110016	Logged By:	T. Longley
Task Number	2	Checked By:	
Subcontractor:	Boart Longyear	Checked Date:	
Drilling Method:	Sonic		
Development Method:			
Development Date:			
Bucking Posts/Ballards:	None		

Notes: Protective Casing is a Flush-to-Ground, temporary 8" x 1' Steel Casing
Well is completed as a Flush-to-Ground completion - will be incorporated into a surface vault in the future; the top 15' of casing is steel; the remainder is SCH 40 PVC

Measuring Point Information

Measuring Point (MP) Type: Ground Surface (GS)

MP Elevation (ft):

Item	Depth BMP (ft)	Elevation (ft)
Stickup	NA	
Riser Pipe (Top)		
Ground Surface	0	
Top of Well Seal	29.8	
Top of Sand Pack	37.25	
Top of Screen	40.9	
Base of Screen	45.32	
End Cap	48.2	
Drilled Depth	48.2	
Bottom of Exploration	48.2	
Bedrock Surface	45.5	

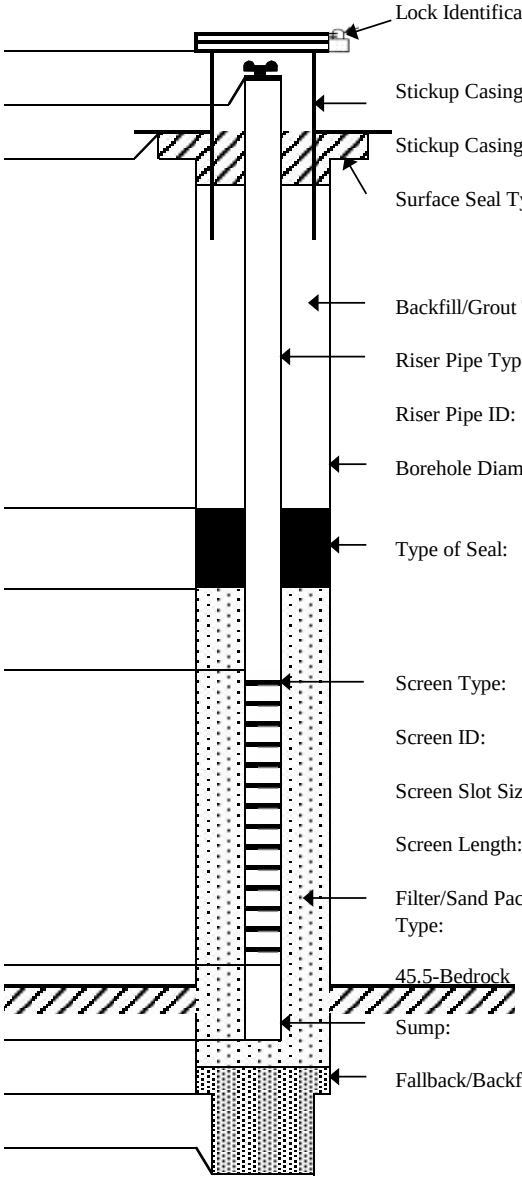

Description	
Lock Identification	NA
Stickup Casing Type:	Flush-to-Ground; steel
Stickup Casing Diameter:	8"
Surface Seal Type:	concrete
Backfill/Grout Type:	cement/bentonite grout
Riser Pipe Type:	Sch 40 PVC; top 15' (from ~16.2) is steel
Riser Pipe ID:	6"
Borehole Diameter:	10"
Type of Seal:	Cetco, coated bent. tablets
Screen Type:	Sch 40 PVC
Screen ID:	6"
Screen Slot Size:	0.010"
Screen Length:	approx. 5 feet
Filter/Sand Pack Type:	Filpro WG #00
Sump:	
Fallback/Backfill:	cave and sand

NOT TO SCALE

amec
511 Congress Street, Portland Maine 04101

WELL CONSTRUCTION DIAGRAM

LOCATION ID: **ILW-1**

Project Name:	Olin Chemical Superfund Site	Date Started:	5/24/2011 Date Completed: 5/25/2011
Project Location:	Wilmington, MA	Logged By:	T. Longley
Project Number:	6107110016 Task Number 2	Checked By:	Checked Date:
Subcontractor:	Boart Longyear Drilling Method: Sonic		
Development Method:	Not Applicable Development Date: N/A		
Bucking Posts/Ballards:	None		
Notes:	Well is a Flush-to-Ground completion, no screen; solid 2"-ID PVC filled with di-ionized water to ground surface		

Measuring Point Information

Measuring Point (MP) Type:	Ground Surface (GS)
MP Elevation (ft):	

Item	Depth BMP (ft)	Elevation (ft)
Stickup	NA	
Riser Pipe (Top)		
Ground Surface	0	
Top of Well Seal	N/A	
Top of Sand Pack	4.8	
Top of Screen	N/A	
Base of Screen	N/A	
End Cap	45	
Drilled Depth	49.5	
Bottom of Exploration	49.5	
Bedrock Surface	45	

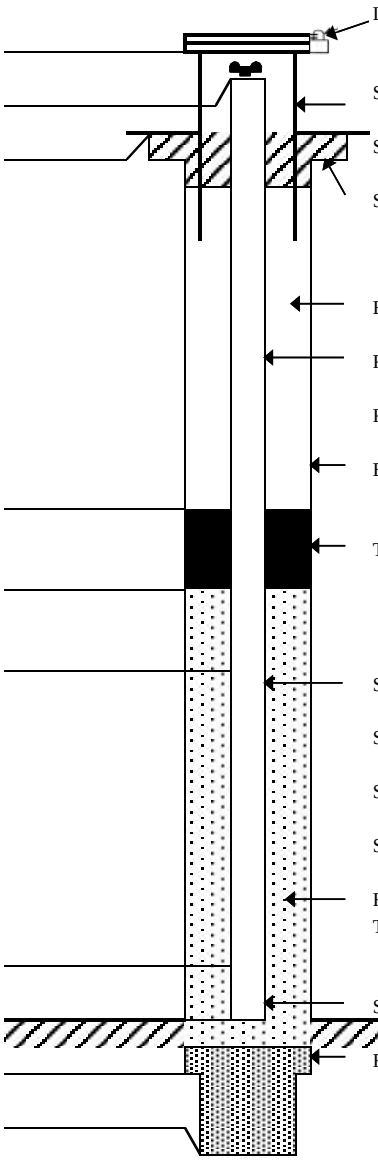

Description	
Lock Identification	N/A
Stickup Casing Type:	Flush-to-Ground Steel
Stickup Casing Diameter:	Flush-to-Ground 6"
Surface Seal Type:	Concrete
Backfill/Grout Type:	N/A
Riser Pipe Type:	
Riser Pipe ID:	2"
Borehole Diameter:	6"
Type of Seal:	N/A
Screen Type:	N/A
Screen ID:	N/A
Screen Slot Size:	N/A
	N/A
Screen Length:	N/A
Filter/Sand Pack Type:	Filpro, #00 Sand: 46' to 4.8'
Sump:	
Fallback/Backfill:	Bentonite 46' to 49.5'

NOT TO SCALE

amec

511 Congress Street, Portland Maine 04101

WELL CONSTRUCTION DIAGRAM

LOCATION ID: **ILW-2**

Project Name:	Olin Chemical Superfund Site			Date Started: 5/25/2011	Date Completed: 5/25/2011
Project Location:	Wilmington, MA			Logged By: T. Longley	
Project Number:	6107110016	Task Number	2	Checked By:	Checked Date:
Subcontractor:	Boart Longyear	Drilling Method:	Sonic		
Development Method:	Not Applicable	Development Date:	N/A		
Bucking Posts/Ballards:	None				

Notes: Well is a Flush-to-Ground completion, no screen; solid 2"-ID PVC filled with di-ionized water to ground surface

Fractured rock 39' to 43.5'

Measuring Point Information

Measuring Point (MP) Type: Ground Surface (GS)

MP Elevation (ft):

Item	Depth BMP (ft)	Elevation (ft)
Stickup	NA	
Riser Pipe (Top)		
Ground Surface	0	
Top of Well Seal	N/A	
Top of Sand Pack	3.5	
Top of Screen	N/A	
Base of Screen	N/A	
End Cap	41	
Drilled Depth	45	
Bottom of Exploration	45	
Bedrock Surface	39	

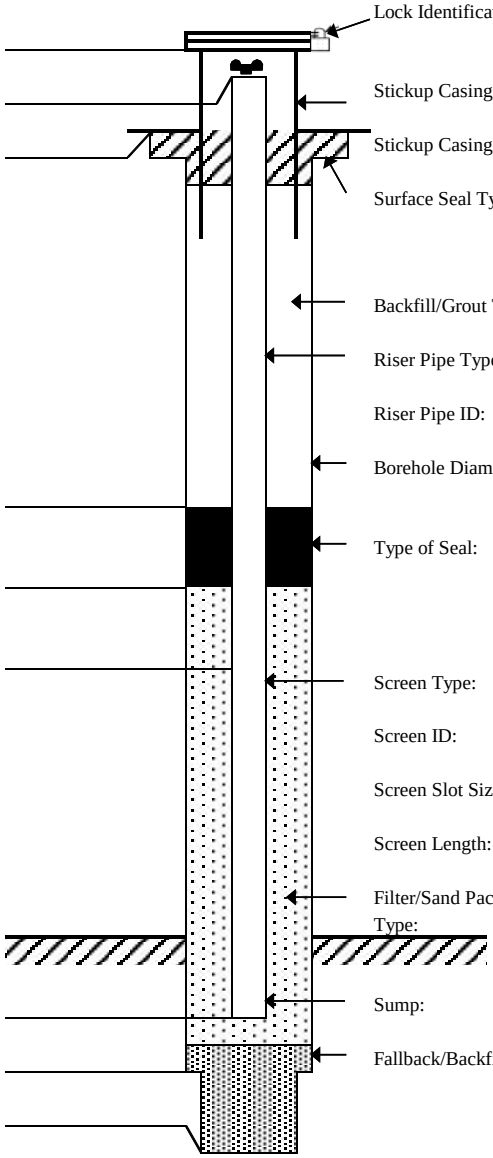

Description	
Lock Identification	N/A
Stickup Casing Type:	Flush-to-Ground Steel
Stickup Casing Diameter:	Flush-to-Ground 6"
Surface Seal Type:	Concrete
Backfill/Grout Type:	N/A
Riser Pipe Type:	
Riser Pipe ID:	2"
Borehole Diameter:	6"
Type of Seal:	N/A
Screen Type:	N/A
Screen ID:	N/A
Screen Slot Size:	N/A
	N/A
Screen Length:	N/A
Filter/Sand Pack Type:	Filpro, #00 Sand: 42'-3.5'
Sump:	
Fallback/Backfill:	Bentonite 43.5' to 42'
	Cave 45' to 43.5'

NOT TO SCALE

amec

511 Congress Street, Portland Maine 04101

WELL CONSTRUCTION DIAGRAM

LOCATION ID: **ML-1**

Project Name:	Olin Chemical Superfund Site			Date Started: 12/6/2011	Date Completed: 12/8/2011
Project Location:	Wilmington, MA			Logged By: T. Longley	
Project Number:	6107110016	Task Number	2	Checked By:	Checked Date:
Subcontractor:	Boart Longyear	Drilling Method:	Sonic		
Development Method:	Not Applicable	Development Date:	N/A		
Bucking Posts/Ballards:	None				

Notes: Well is a Flush-to-Ground completion
Surface completion includes a manifold for the tubing from each zone; well is
a 2-inch dia. Solinst Multi-level Piezometer; sandpack around zones is 000 sand

Measuring Point Information

Measuring Point (MP) Type: Ground Surface (GS)

MP Elevation (ft):

Item	Depth BMP (ft)	Elevation (ft)
Ground Surface	0	88
	1	86
	2	85
	3	84
	4	83
	5	82
	6	81
Approximate	7	80
Water	8	79
Table	9	78
	10	77
	11	76
	12	75
	13	74
	14	73
	15	72
	16	71
	17	70
	18	69
	19	68
	20	67
	21	66
	22	65
	23	64
	24	63
Overlying	25	62
Zone	26	61
	27	60
	28	59
	29	58
Diffuse	30	57
Zone	31	56
	32	55
	33	54
	34	53
DAPL	35	52
Zone	36	51
	37	50
	38	49
	39	48
	40	47

Description

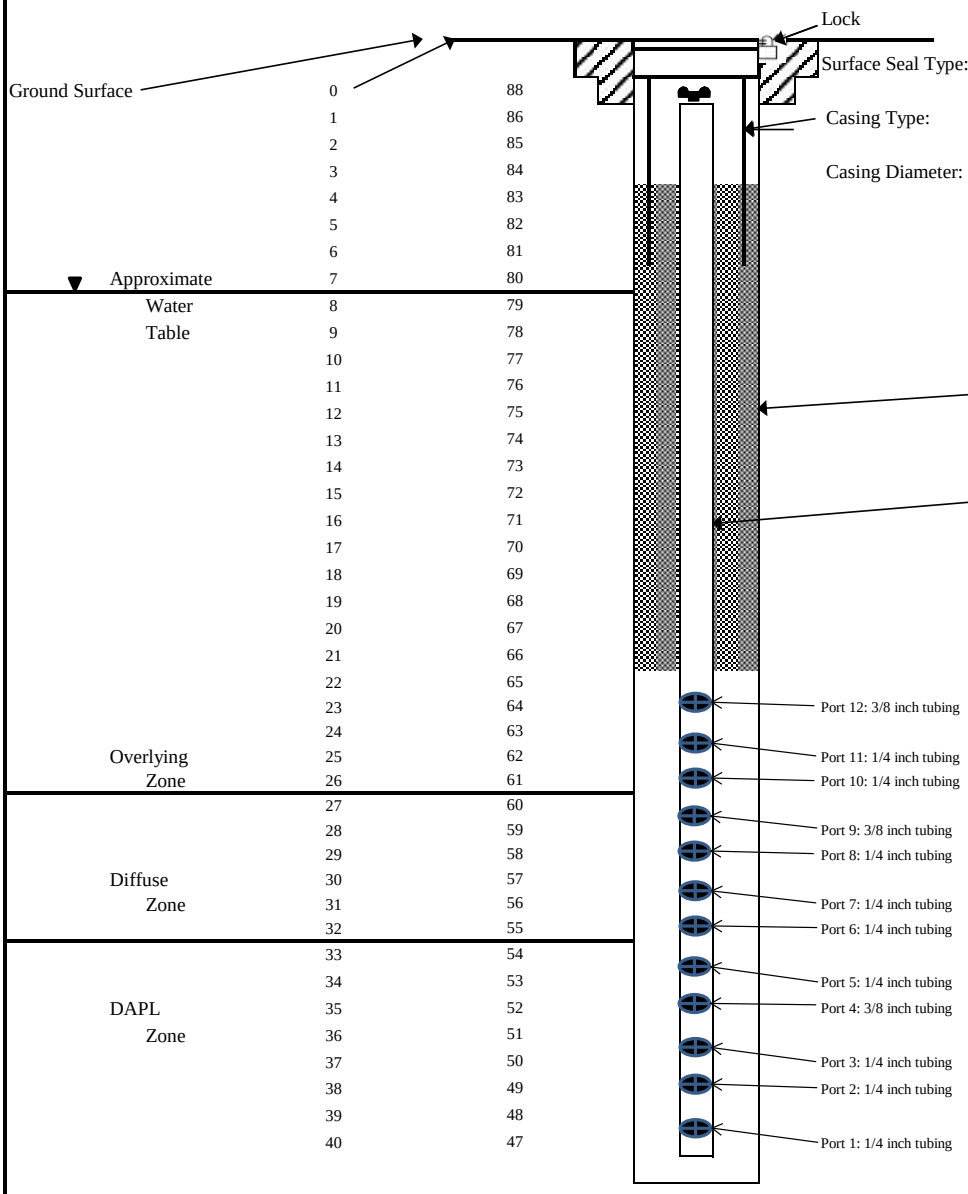

Surface Seal Type:	Concrete
Casing Type:	Flush-to-Ground Steel
Casing Diameter:	Flush-to-Ground 6"

Each port, or zone, consists of a stainless steel screened section. At and around each zone, sand extends above and below the screens, for a total sand layer approaching one foot in thickness; alternating with these screened sand sections are bentonite seals to isolate each zone

NOT TO SCALE

amec

511 Congress Street, Portland Maine 04101

WELL CONSTRUCTION DIAGRAM

LOCATION ID: **ML-2**

Project Name:	Olin Chemical Superfund Site			Date Started: 12/8/2011	Date Completed: 12/9/2011
Project Location:	Wilmington, MA			Logged By: T. Longley	
Project Number:	6107110016	Task Number	2	Checked By:	Checked Date:
Subcontractor:	Boart Longyear	Drilling Method:	Sonic		
Development Method:	Not Applicable	Development Date:	N/A		
Bucking Posts/Ballards:	None				

Notes: Well is a Flush-to-Ground completion
Surface completion includes a manifold for the tubing from each zone; well is
a 2-inch dia. Solinst Multi-Level Piezometer; sandpack around zones is 000 sand

Measuring Point Information

Measuring Point (MP) Type:	Ground Surface (GS)
MP Elevation (ft):	~88' MSL

Item	Depth BMP (ft)	Elevation (ft)
Ground Surface	0	88
	1	86
	2	85
	3	84
	4	83
	5	82
	6	81
Approximate	7	80
Water	8	79
Table	9	78
	10	77
	11	76
	12	75
	13	74
	14	73
	15	72
	16	71
	17	70
	18	69
	19	68
	20	67
	21	66
	22	65
	23	64
	24	63
Overlying	25	62
Zone	26	61
	27	60
	28	59
	29	58
Diffuse	30	57
Zone	31	56
	32	55
	33	54
	34	53
DAPL	35	52
Zone	36	51
	37	50
	38	49
	39	48
	40	47

Description

Surface Seal Type:	Concrete
Casing Type:	Flush-to-Ground Steel
Casing Diameter:	Flush-to-Ground 6"

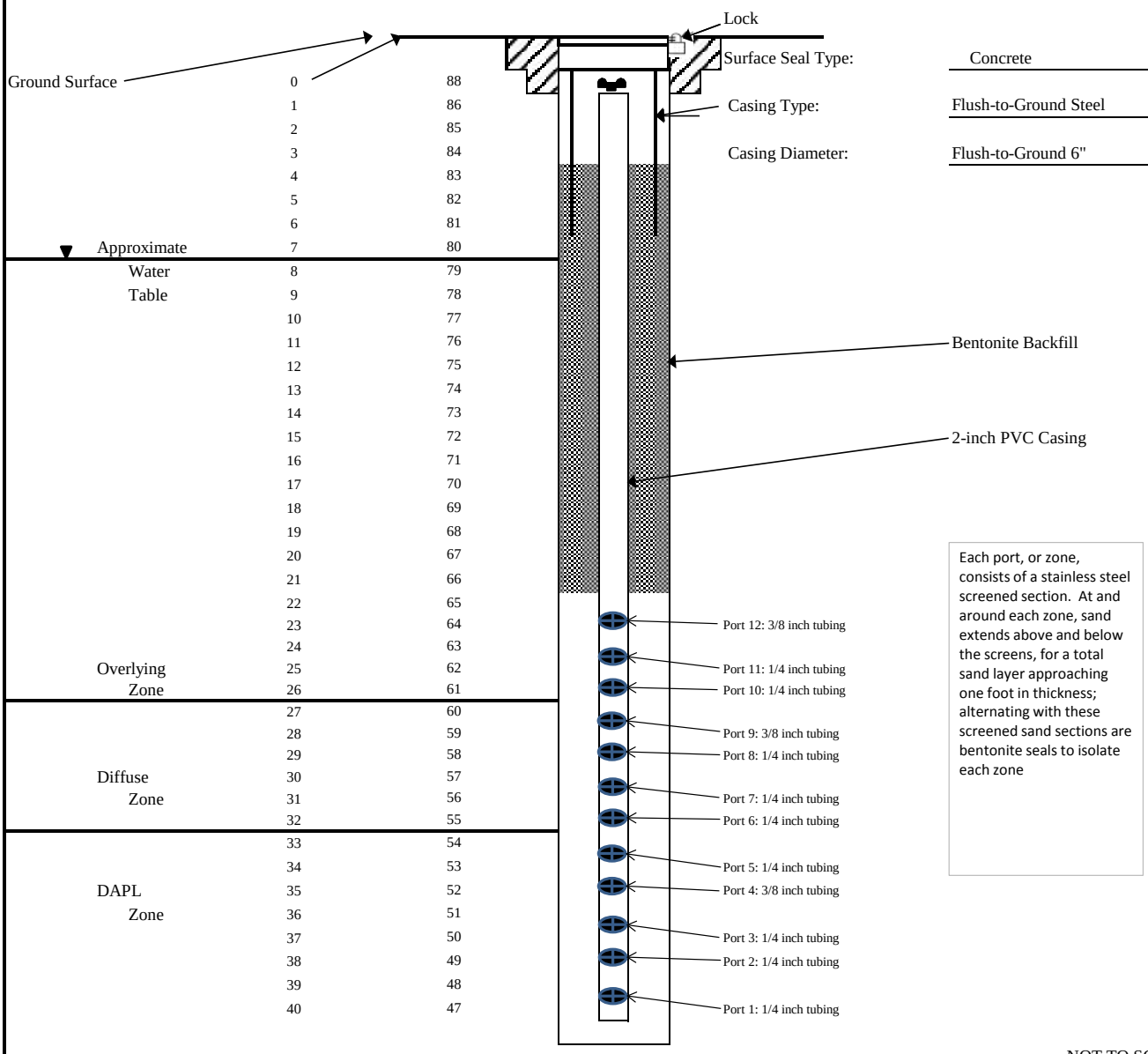

Each port, or zone, consists of a stainless steel screened section. At and around each zone, sand extends above and below the screens, for a total sand layer approaching one foot in thickness; alternating with these screened sand sections are bentonite seals to isolate each zone

NOT TO SCALE

amec

511 Congress Street, Portland Maine 04101

APPENDIX C
STANDARD OPERATING PROCEDURES FOR INDUCTION LOGGING

SOP No. S-1

AMEC E&I STANDARD OPERATING PROCEDURE

GENERAL PROCEDURE FOR INDUCTION LOGGING IN WELLS

1.0 SCOPE AND APPLICABILITY

This Standard Operating Procedure (SOP) describes the use of induction logging in monitoring wells. Induction logging may be used to determine spatial and temporal changes in electrical conductivity in the subsurface due to dissolved contaminants in groundwater. This SOP is intended to compliment (not replace) information, procedures and guidelines as supplied by the logging equipment vendor and/or manufacturer and associated equipment-specific procedures.

2.0 EQUIPMENT

The following equipment and supplies are recommended prior to initiating field activities:

2.1 MEASUREMENT SPECIFIC SUPPLIES

- Induction log probe (Geonics EM 39, or equivalent)
- Wire line winch system compatible with the log probe
- Tripod and pulley apparatus
- Field-capable computer or data logger with the required software for the logging system
- 12V battery (fully charged)
- 12V to AC inverter
- Keys and necessary tools to open wells
- Duct tape
- Water level meter

2.2 FIELD DATA AND RECORD KEEPING SPECIFIC SUPPLIES

- Field notebook and pen with indelible ink
- Well construction details for the well(s) to be logged (total depth, etc.)

2.3 DECONTAMINATION SUPPLIES

- Deionized (DI) water
- AlconoxTM detergent, or equivalent
- Paper towels

2.4 HEALTH AND SAFETY EQUIPMENT

- As required per site Health and Safety plan

3.0 PREPARATION

The induction logging probe has been factory calibrated and does not require calibration prior to each field deployment. In the unlikely event calibration is required; calibration may be performed by the vendor from which the equipment has been supplied. Calibration may be checked per the manufacturer's guidelines with the calibration ring provided with the equipment. Instrument calibration should be performed only by vendor- or manufacturer-supplied procedures and guidelines. Atmosphere should provide a zero conductivity value as a quick operational check. It is a good general practice to re-log a portion of at least one hole on a daily basis (perhaps twenty feet where value changes are noted) for repeatability check. Checking calibration at the beginning and conclusion of each logging event is recommended.

Verify the charge status of the 12V battery (fully charged). If the 12V battery in the vehicle is being used, the motor should be off.

Before proceeding to the first well to be logged, set up all equipment to be used in the field (12V battery, inverter, wire line console, probe, and computer or data logger) and verify that the signal is being received and recorded.

4.0 PROCEEDURES

1. Open the well cap and check the wellhead and breathing space atmosphere for worker health (as required by the applicable Site Health and Safety Plan). Record the results if measurements are collected. Take appropriate respiratory precautions (including leaving the area) if conditions warrant.
2. Measure and record the groundwater water level below the top of casing or other established datum. Measure to the nearest 0.01 foot, unless specified otherwise by the Site work plan or Data Quality Objectives (DQO). Compare the result to historic values, if available, and note any significant deviations.
3. Verify the total depth (TD) of the well from completion logs or other validated data source. The total depth of the well may be measured using the water level probe.
4. Connect all associated equipment (probe, cable, PC/data logger, inverter, battery) per manufacture's and/or vendor's guidelines, and before turning power on to the logging unit.
5. Turn the power on to the logger (Note: NEVER attach probe to cable with power on!).
6. Lower probe into the well and set the point where the probe and cable attach at the surveyed measuring point of the well casing. This is the point at which the depth measurements will be "zeroed" and must be set consistently so that previous and subsequent logging data can be compared. Use the tripod and pulley system as allowed by local site and well construction conditions.
7. Open the data logging software and follow the on-screen procedures to zero the depth, set the desired sampling interval (0.1 ft is recommended), and create a data file with a unique file name. Verify that an ASCII-format data file is being created so that data can be accessed by appropriate software for post processing.

8. Record the time, well or location ID, and data file name in the field log book or field recording form.
9. Activate the winch to lower the probe down the well, adjusting the speed so that the system can acquire quality data at a specified sampling rate (10 ft/min. is recommended for 0.1 ft sampling interval). Monitor the software display to ensure that data is being received and recorded.
10. Monitor the depth of the probe to ensure that excess cable slack is not generated when probe reaches the bottom of the well.
11. When the probe reaches the bottom of the well, stop the winch and, if desired, close the data file. A new data file may be created for recording the data when the probe is raised from the well. Alternatively, the file may be kept open and recording as the winch is stopped and reversed with the ascending data separated during post-processing.
12. Closely monitor the depth of the probe as it is being raised to ensure that it is stopped before it reaches the top of the well.
13. When the logging is complete close and save the data file before removing the probe. Also verify that the file contains appropriate data before removing the probe from the well. Re-log the well if needed.
14. TURN OFF POWER TO PROBE AND DISCONECT POWER SUPPLY BEFORE DISASSEMBLING SYSTEM! NEVER REMOVE THE PROBE FROM CABLE WITH THE POWER ON!
15. If necessary, decontaminate the probe with AlconoxTM solution and DI water rinse. The cable may be decontaminated by holding a wet rag on the cable as the tool is being retrieved, but care must be taken not to interfere with the function of the depth recording apparatus on the winch.
16. Secure the well and record the time in the log book or field data form. Also record any pertinent observations made during the logging that may affect data processing and interpretation.
17. At the earliest convenience, backup recorded logging data from the data logger or computer onto other media (from data logger to computer, from computer to USB flash drive, etc.) to minimize the potential for data loss or corruption prior to data analyses.

APPENDIX D
WATER QUALITY PLOTS

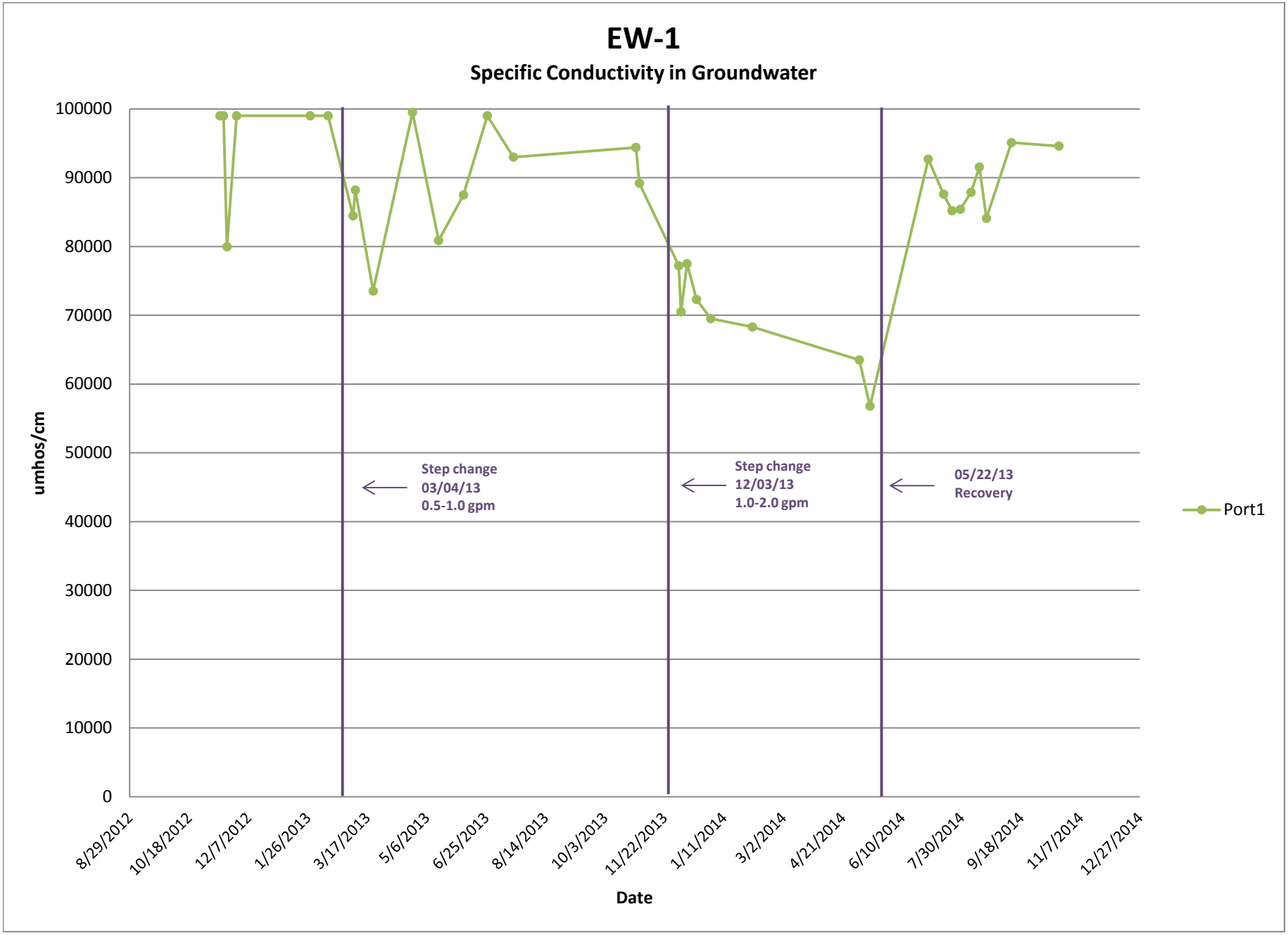

\\WFD-fs1\projects\old_Wakefield_Data\projects\OLIN\Wilmington\DAPL Extraction System\
DAPL Pilot Test Field Chemistry Graphs.xlsx, Graph_EW1_Conductivity

Prepared by: LJ
Checked by: PHT

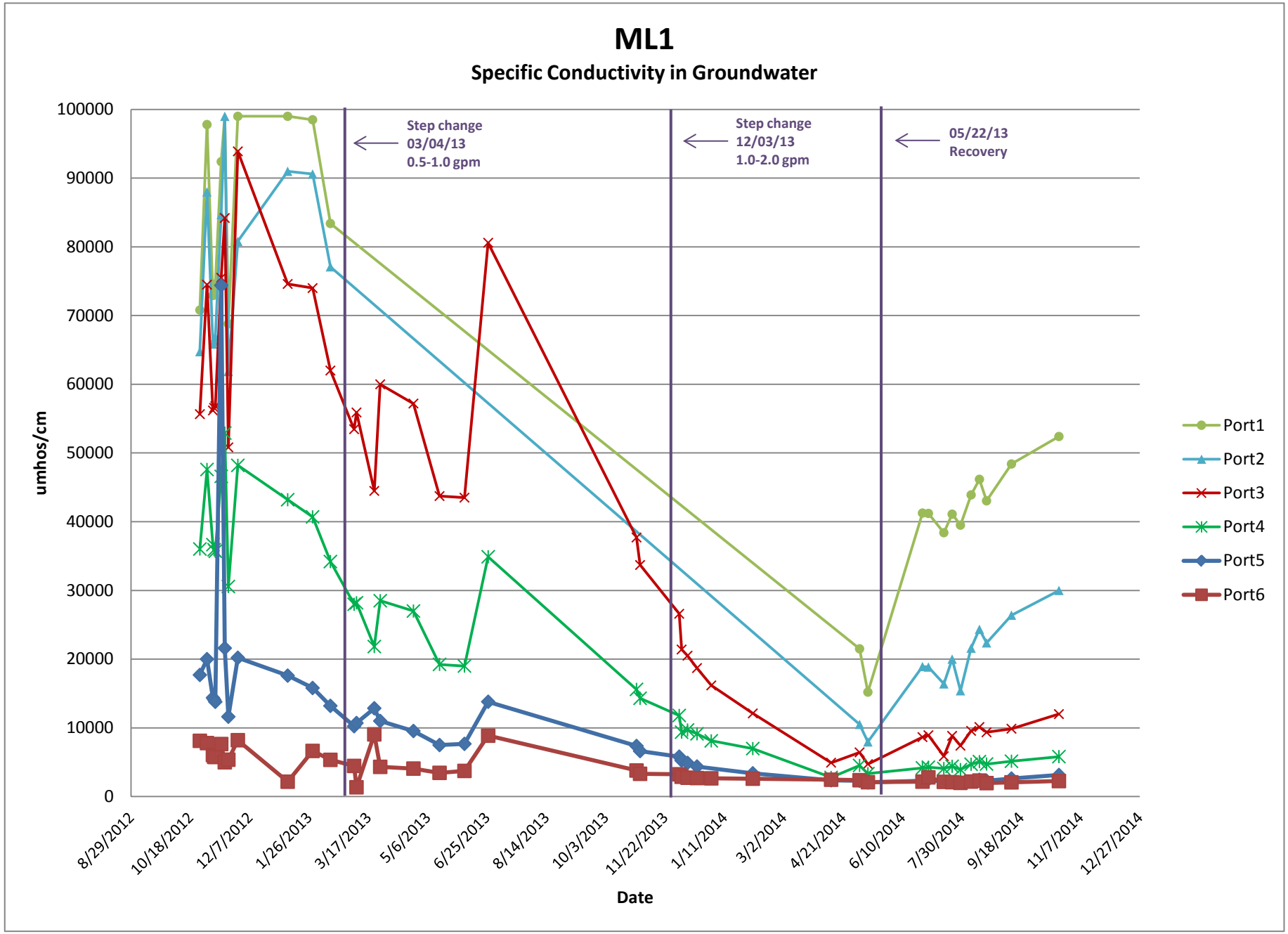

\\WFD-fs1\projects\old_Wakefield_Data\projects\OLIN\Wilmington\DAPL Extraction System\
DAPL Pilot Test Field Chemistry Graphs.xlsx, Graph_ML1Conductivity_123456

Prepared by: LJ
Checked by: PHT

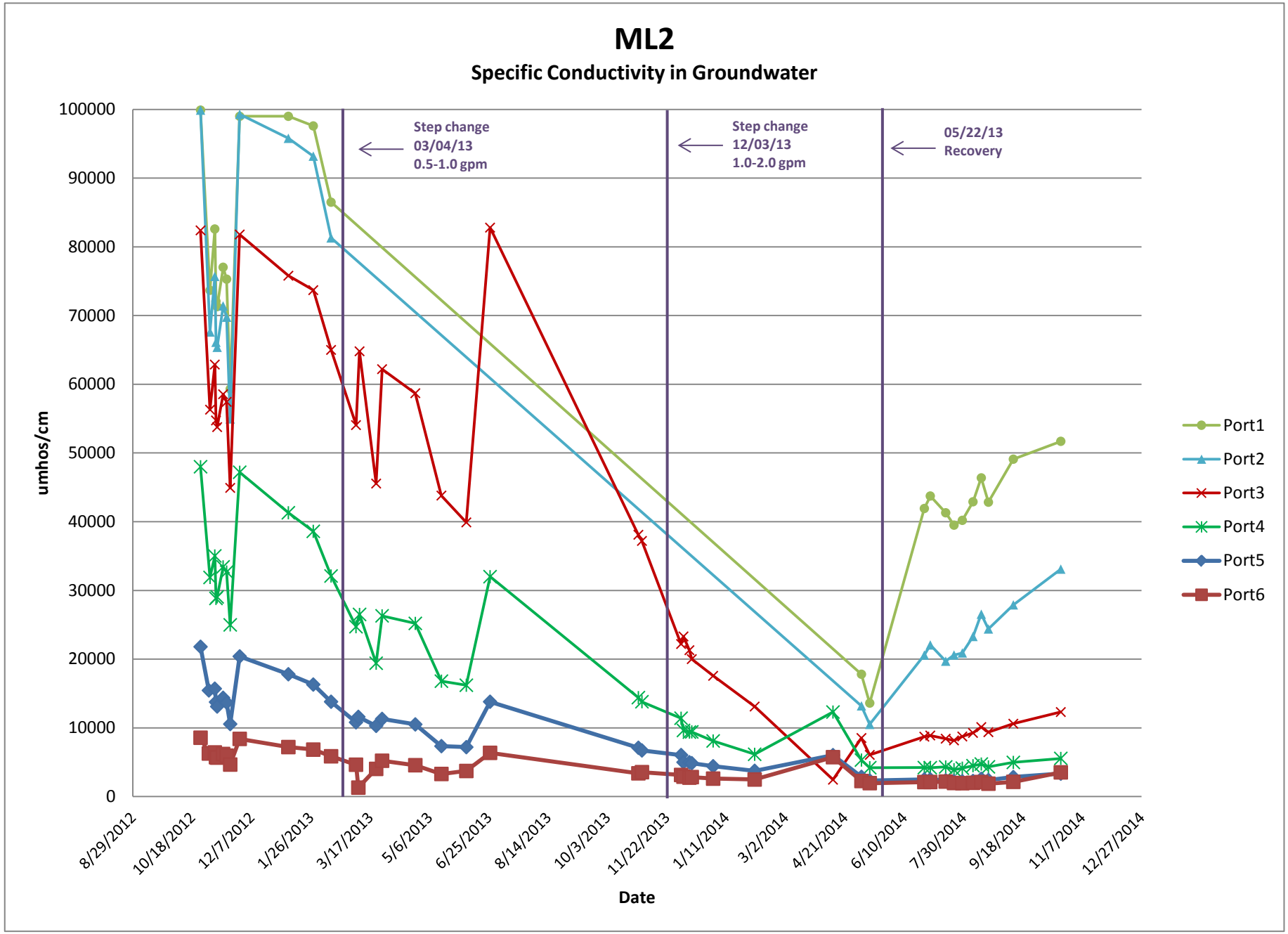

\\WFD-fs1\projects\old_Wakefield_Data\projects\OLIN\Wilmington\DAPL Extraction System\
DAPL Pilot Test Field Chemistry Graphs.xlsx, Graph_ML2Conductivity_123456

Prepared by: LJ
Checked by: PHT

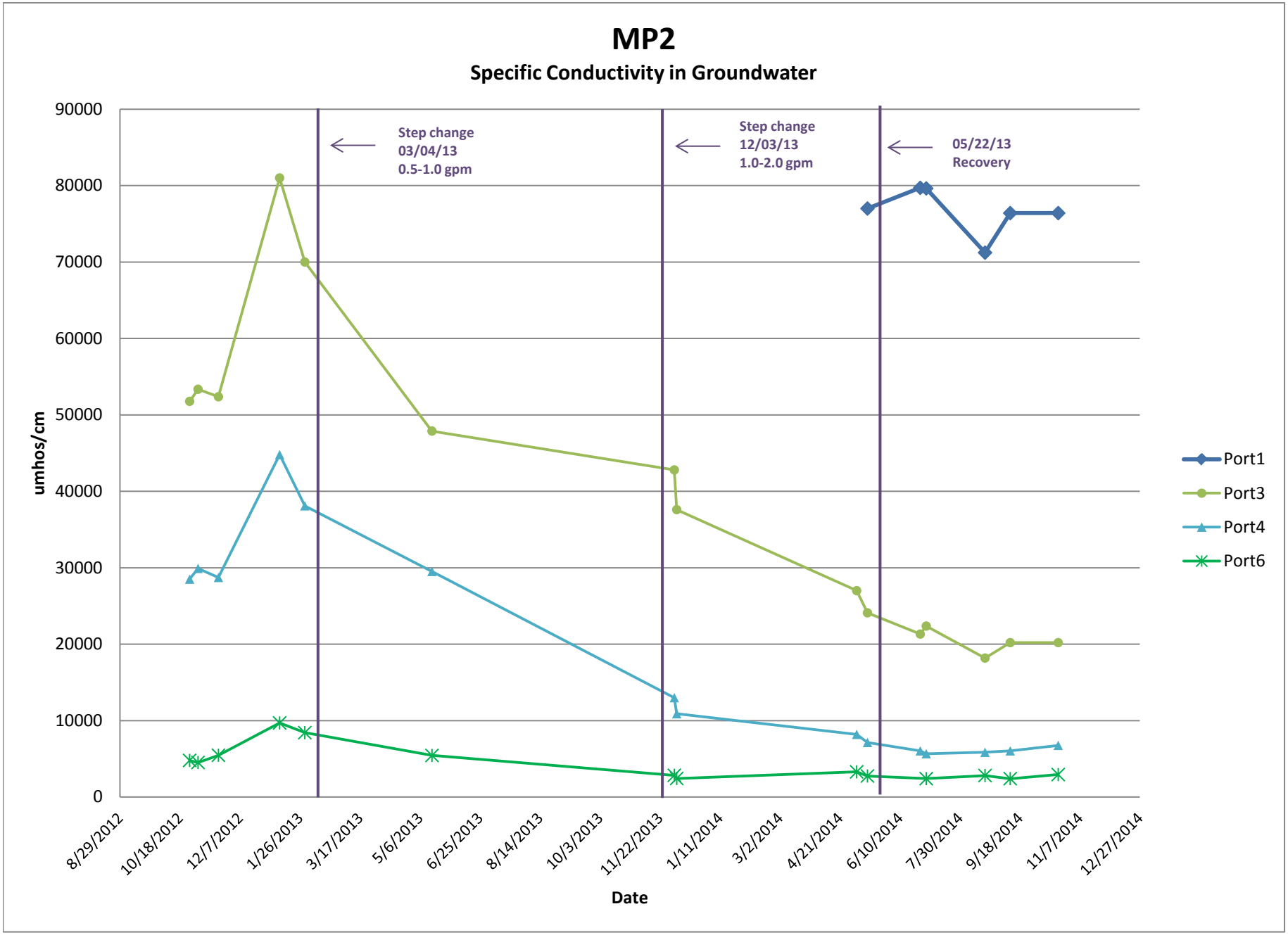

\\WFD-fs1\projects\old_Wakefield_Data\projects\OLIN\Wilmington\DAPL Extraction System\
DAPL Pilot Test Field Chemistry Graphs.xlsx, Graph_MP2_Conductivity_13456

Prepared by: LJ
Checked by: PHT

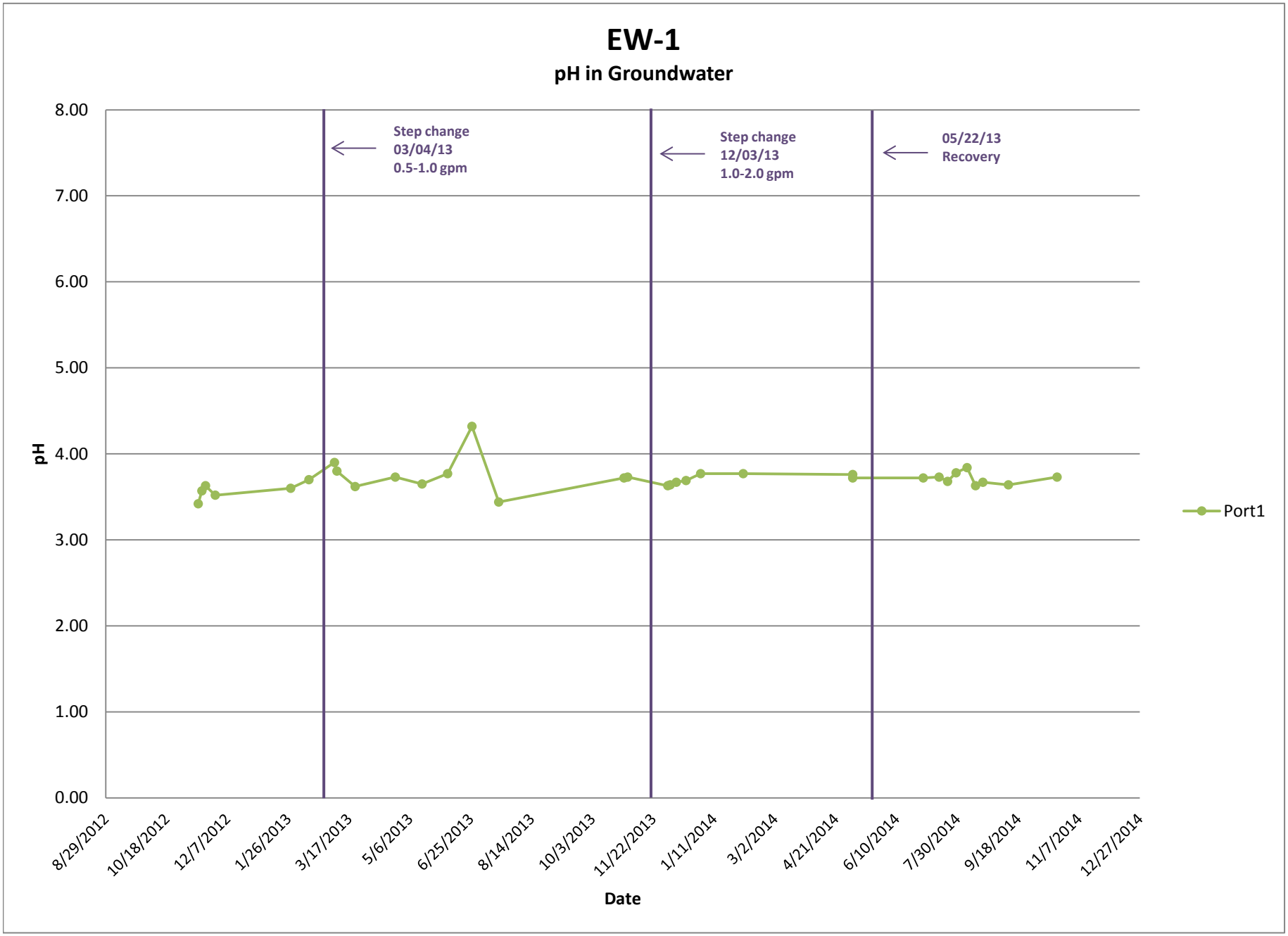

\\WFD-fs1\projects\old_Wakefield_Data\projects\OLIN\Wilmington\DAPL Extraction System\
DAPL Pilot Test Field Chemistry Graphs.xlsx, Graph_EW1_pH

Prepared by: LJ
Checked by: PHT

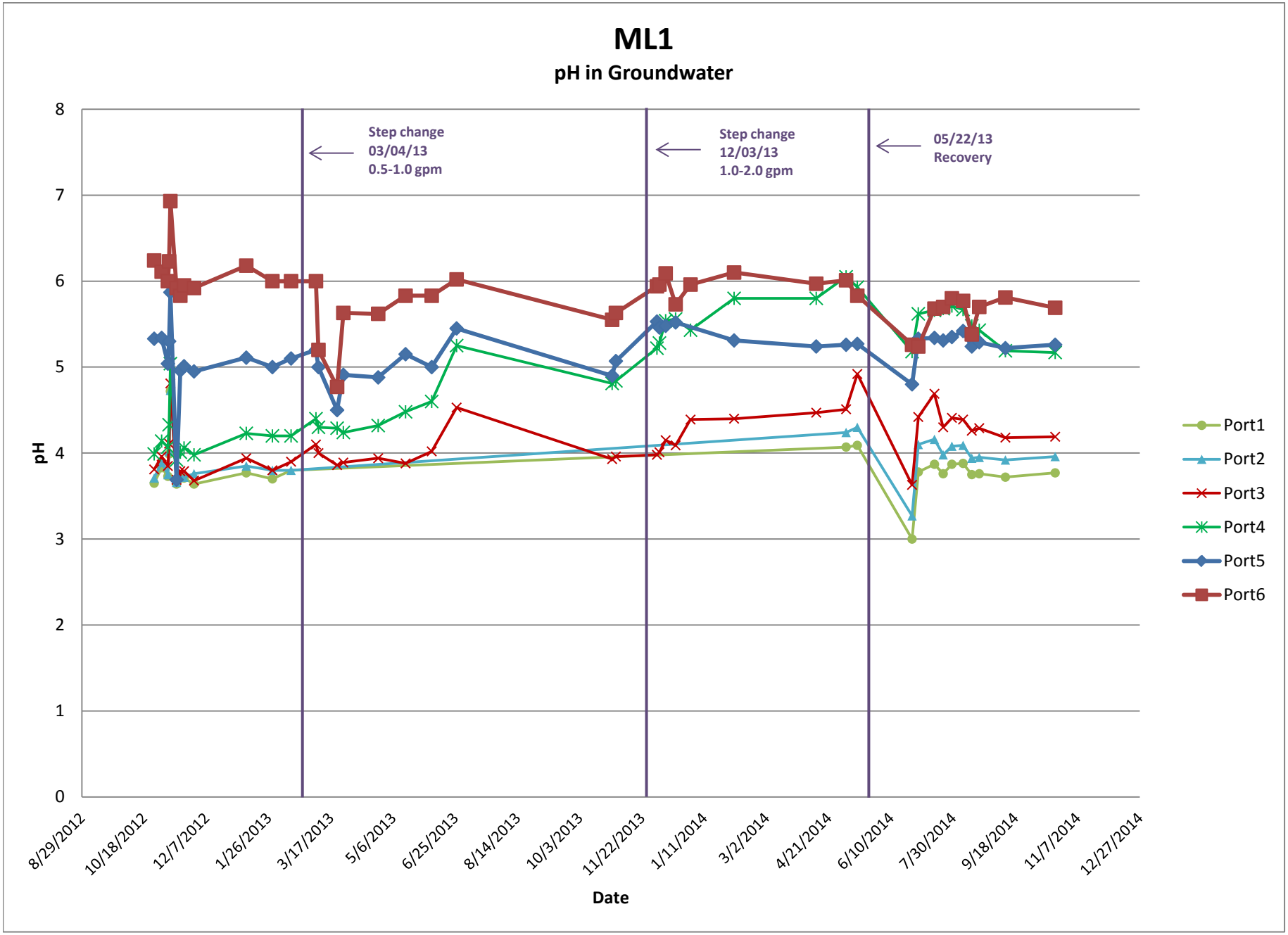

\\WFD-fs1\projects\old_Wakefield_Data\projects\OLIN\Wilmington\DAPL Extraction System\
DAPL Pilot Test Field Chemistry Graphs.xlsx, Graph_ML1_PH_123465

Prepared by: LJ
Checked by: PHT

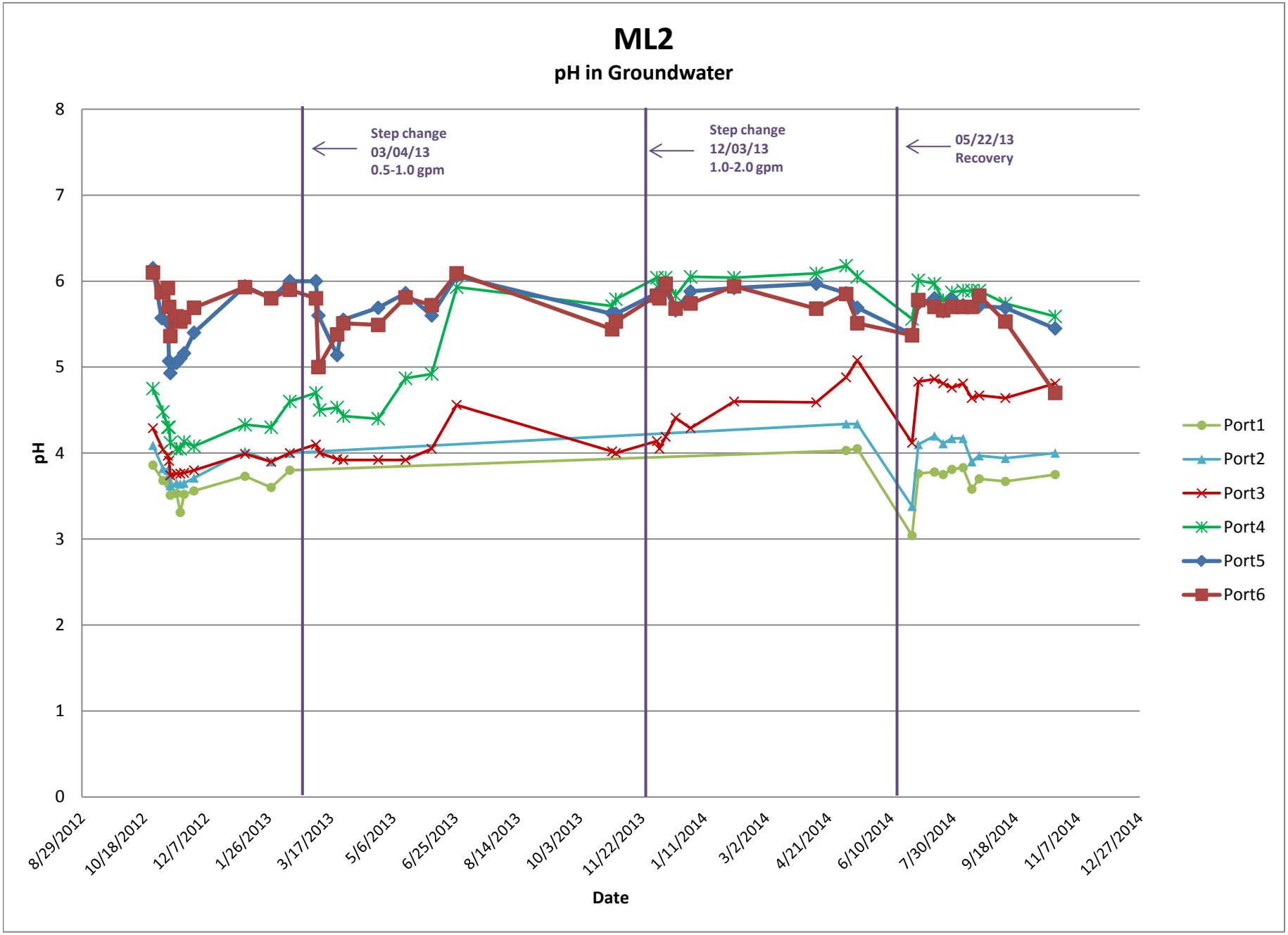

\\WFD-fs1\projects\old_Wakefield_Data\projects\OLIN\Wilmington\DAPL Extraction System\
DAPL Pilot Test Field Chemistry Graphs.xlsx, Graph_ML2_pH_123456

Prepared by: LJ
Checked by: PHT

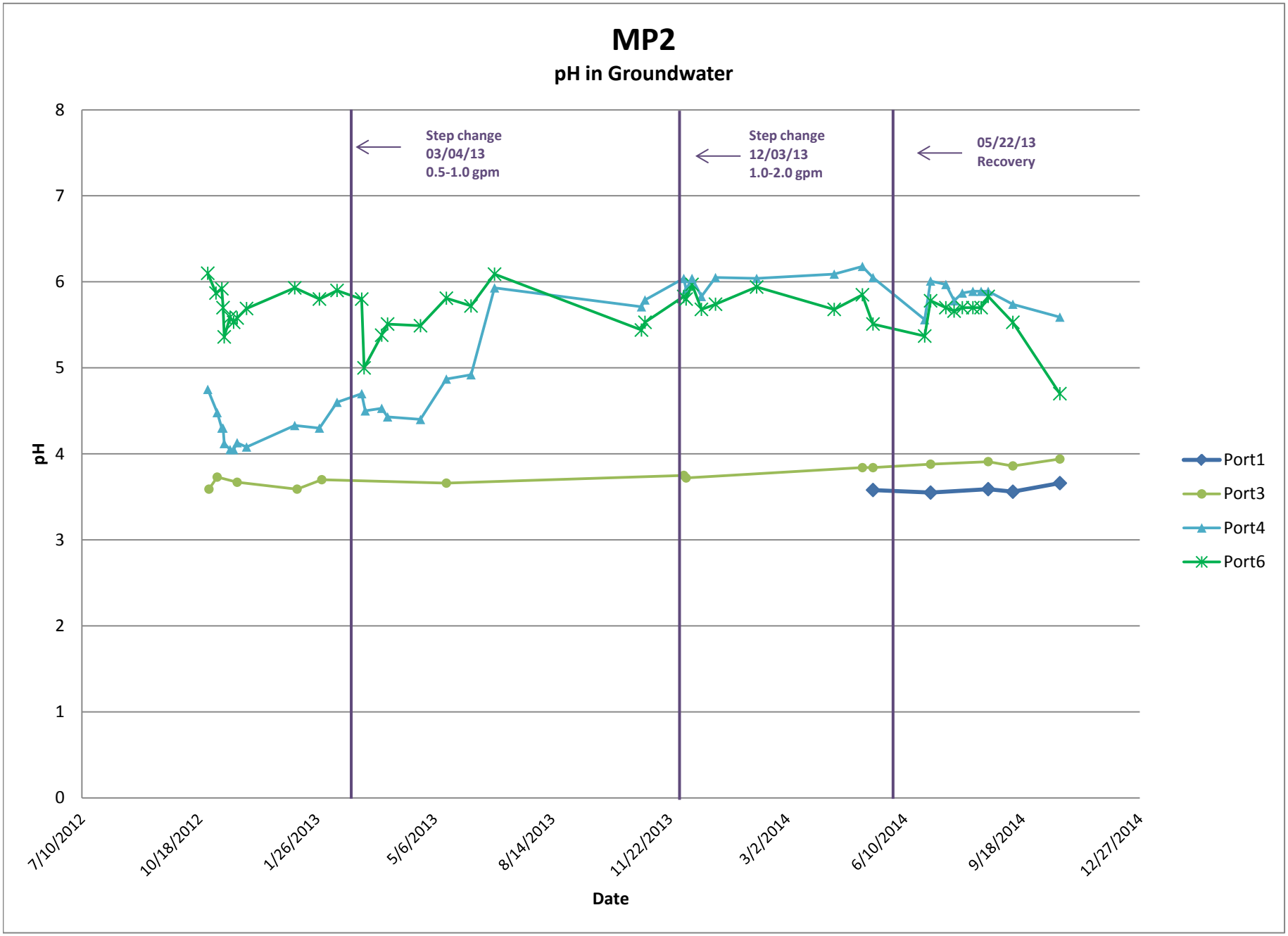

\\WFD-fs1\projects\old_Wakefield_Data\projects\OLIN\Wilmington\DAPL Extraction System\
DAPL Pilot Test Field Chemistry Graphs.xlsx, Graph_MP2_pH_1_3_4_6

Prepared by: LJ
Checked by: PHT

APPENDIX E
INDUCTION LOGGING PLOTS

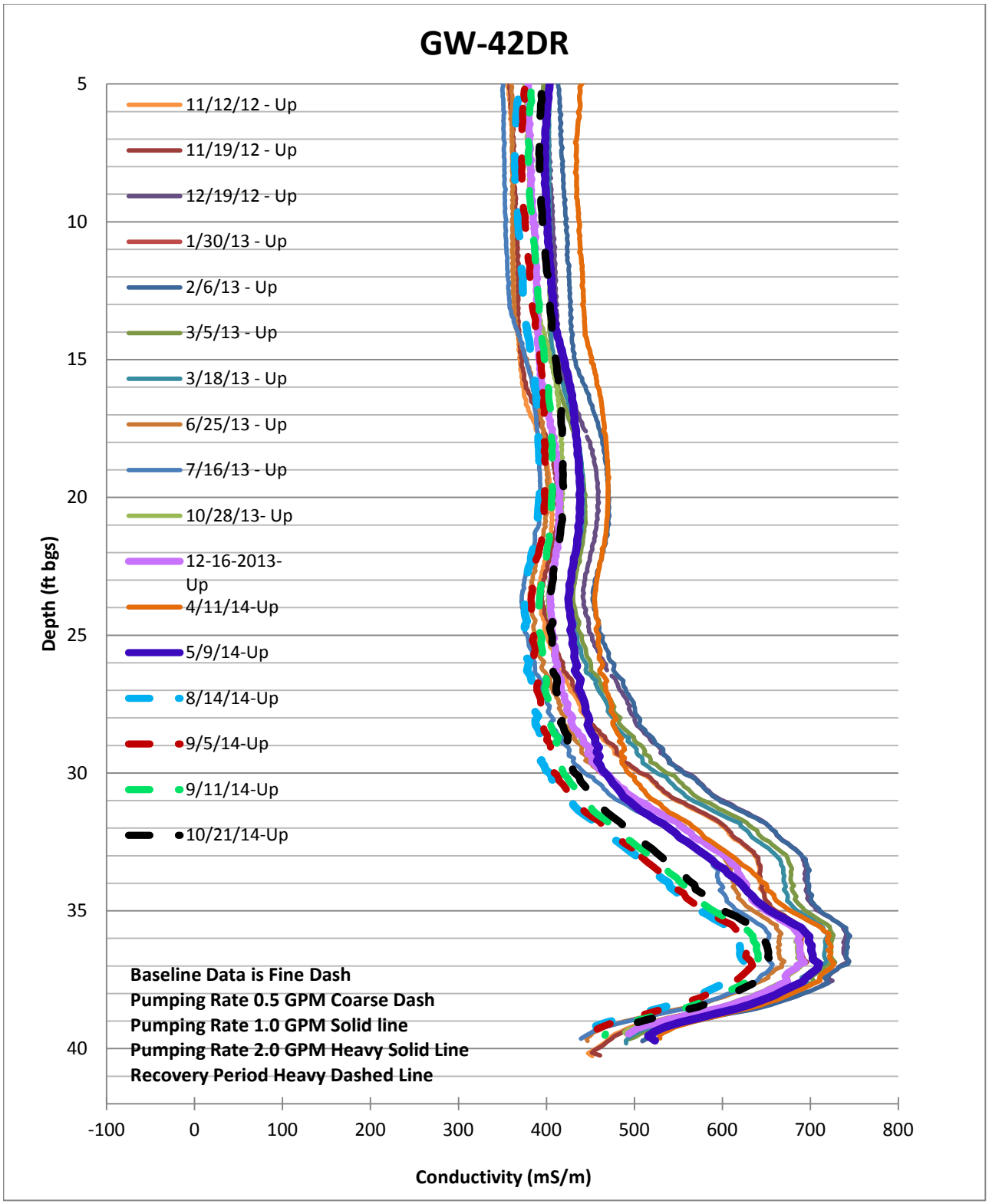
GW-42DR
11/12/12 - Up
11/19/12 - Up
12/19/12 - Up
1/30/13 - Up
2/6/13 - Up
3/5/13 - Up
3/18/13 - Up
6/25/13 - Up
7/16/13 - Up
10/28/13- Up
12-16-2013-Up
4/11/14-Up
5/9/14-Up
8/14/14-Up
9/5/14-Up
9/11/14-Up
10/21/14-Up
Baseline Data is Fine Dash
Pumping Rate 0.5 GPM Coarse Dash
Pumping Rate 1.0 GPM Solid line
Pumping Rate 2.0 GPM Heavy Solid Line
Recovery Period Heavy Dashed Line
Depth (ft bgs)
5
10
15
20
25
30
35
40
-100
0
100
200
300
400
500
600
700
800
Conductivity (mS/m)

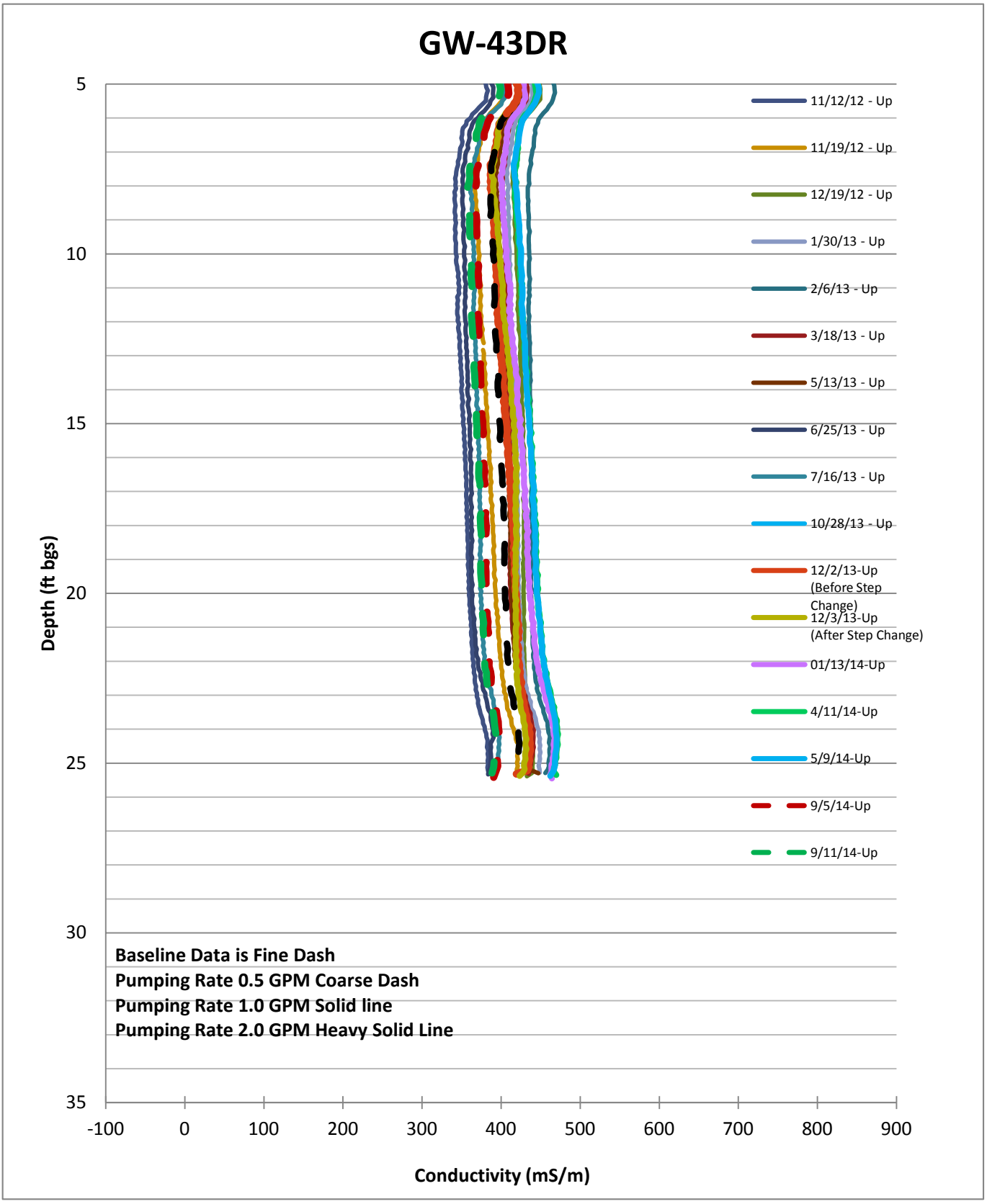
GW-43DR
Depth (ft bgs)
5
10
15
20
25
30
35
-100
0
100
200
300
400
500
600
700
800
900
Conductivity (mS/m)
11/12/12 - Up
11/19/12 - Up
12/19/12 - Up
1/30/13 - Up
2/6/13 - Up
3/18/13 - Up
5/13/13 - Up
6/25/13 - Up
7/16/13 - Up
10/28/13 - Up
12/2/13-Up (Before Step Change)
12/3/13-Up (After Step Change)
01/13/14-Up
4/11/14-Up
5/9/14-Up
9/5/14-Up
9/11/14-Up
Baseline Data is Fine Dash
Pumping Rate 0.5 GPM Coarse Dash
Pumping Rate 1.0 GPM Solid line
Pumping Rate 2.0 GPM Heavy Solid Line

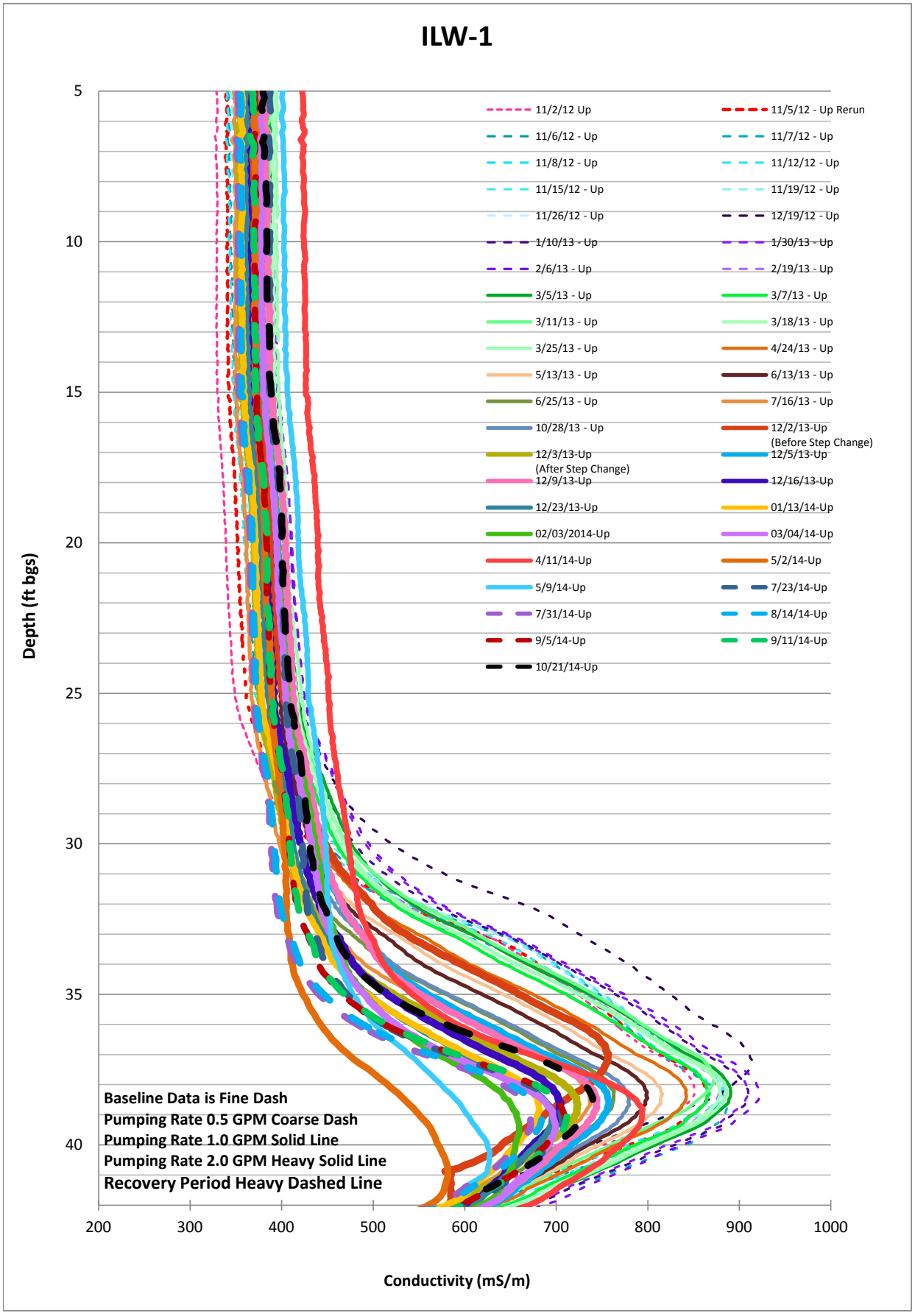
ILW-1
Depth (ft bgs)
Conductivity (mS/m)
5
10
15
20
25
30
35
40
200
300
400
500
600
700
800
900
1000
11/2/12 Up
11/5/12 - Up Rerun
11/6/12 - Up
11/7/12 - Up
11/8/12 - Up
11/12/12 - Up
11/15/12 - Up
11/19/12 - Up
11/26/12 - Up
12/19/12 - Up
1/10/13 - Up
1/30/13 - Up
2/6/13 - Up
2/19/13 - Up
3/5/13 - Up
3/7/13 - Up
3/11/13 - Up
3/18/13 - Up
3/25/13 - Up
4/24/13 - Up
5/13/13 - Up
6/13/13 - Up
6/25/13 - Up
7/16/13 - Up
10/28/13 - Up
12/2/13-Up (Before Step Change)
12/3/13-Up (After Step Change)
12/5/13-Up
12/9/13-Up
12/16/13-Up
12/23/13-Up
01/13/14-Up
02/03/2014-Up
03/04/14-Up
4/11/14-Up
5/2/14-Up
5/9/14-Up
7/23/14-Up
7/31/14-Up
8/14/14-Up
9/5/14-Up
9/11/14-Up
10/21/14-Up
Baseline Data is Fine Dash
Pumping Rate 0.5 GPM Coarse Dash
Pumping Rate 1.0 GPM Solid Line
Pumping Rate 2.0 GPM Heavy Solid Line
Recovery Period Heavy Dashed Line

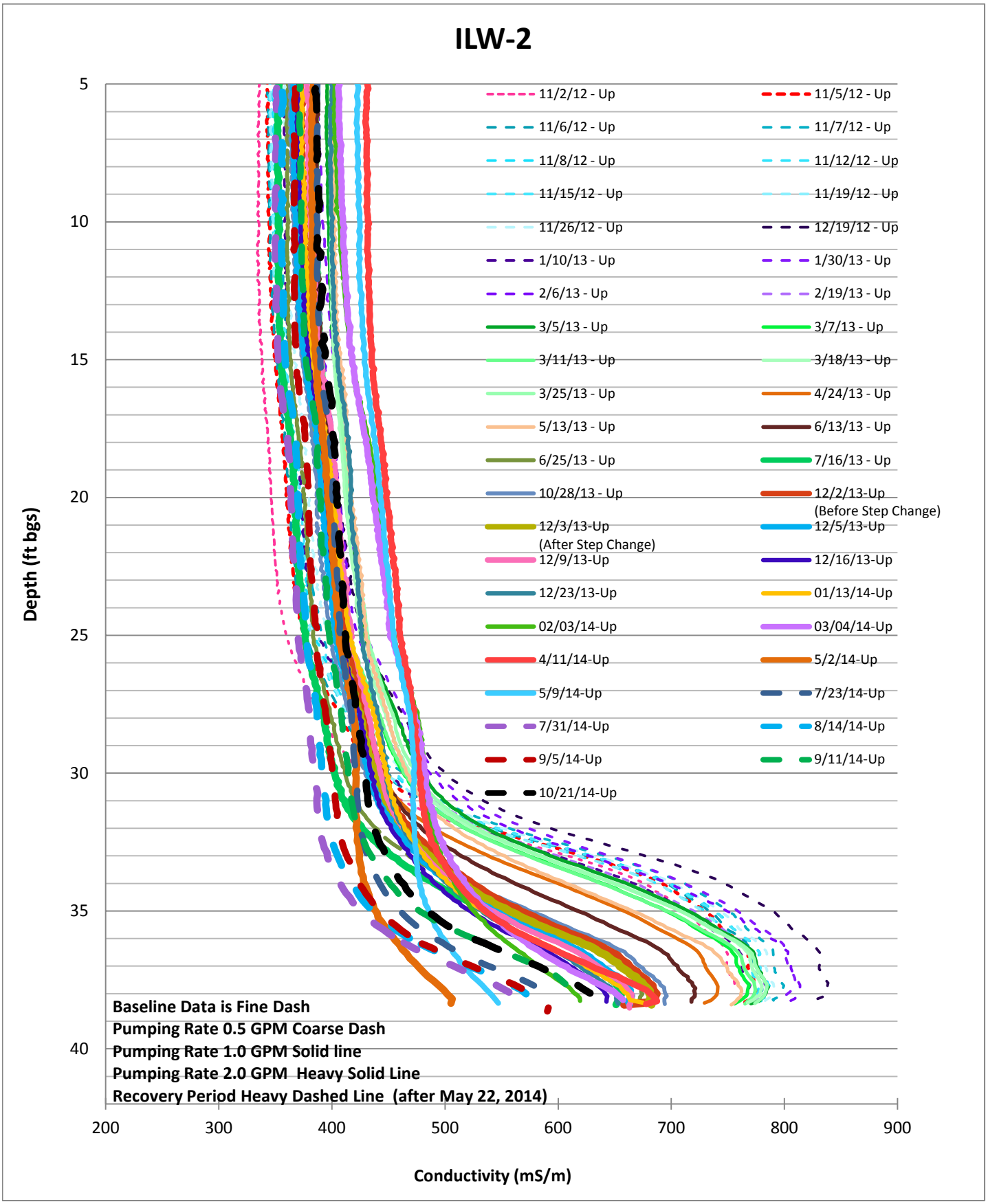
ILW-2
Depth (ft bgs)
Conductivity (mS/m)
5
10
15
20
25
30
35
40
200
300
400
500
600
700
800
900
11/2/12 - Up
11/5/12 - Up
11/6/12 - Up
11/7/12 - Up
11/8/12 - Up
11/12/12 - Up
11/15/12 - Up
11/19/12 - Up
11/26/12 - Up
12/19/12 - Up
1/10/13 - Up
1/30/13 - Up
2/6/13 - Up
2/19/13 - Up
3/5/13 - Up
3/7/13 - Up
3/11/13 - Up
3/18/13 - Up
3/25/13 - Up
4/24/13 - Up
5/13/13 - Up
6/13/13 - Up
6/25/13 - Up
7/16/13 - Up
10/28/13 - Up
12/2/13-Up
(Before Step Change)
12/3/13-Up
(After Step Change)
12/5/13-Up
12/9/13-Up
12/16/13-Up
12/23/13-Up
01/13/14-Up
02/03/14-Up
03/04/14-Up
4/11/14-Up
5/2/14-Up
5/9/14-Up
7/23/14-Up
7/31/14-Up
8/14/14-Up
9/5/14-Up
9/11/14-Up
10/21/14-Up
Baseline Data is Fine Dash
Pumping Rate 0.5 GPM Coarse Dash
Pumping Rate 1.0 GPM Solid line
Pumping Rate 2.0 GPM Heavy Solid Line
Recovery Period Heavy Dashed Line (after May 22, 2014)