RETURN TO 1998 ROD AR INDEX

SDMS DocID 63823

New Bedford
17.07
63823

perox-pure tm

ORGANIC DESTRUCTION PROCESS

NEW BEDFORD SUPERFUND PROJECT
EVALUATION OF CARBON AND UV/HYDROGEN PEROXIDE TREATMENT OF CONFINED DISPOSAL FACILITY EFFLUENT

ENVIRONMENTAL LABORATORY

U.S. ARMY CORPS OF ENGINEERS

WATERWAYS EXPERIMENT STATION

CONTRACT NO. DACW39-88-C-0060

Peroxidation Systems Inc.

NEW BEDFORD HARBOR SUPERFUND PROJECT

EVALUATION OF ACTIVATED CARBON AND UV/HYDROGEN PEROXIDE TREATMENT OF CONFINED DISPOSAL FACILITY EFFLUENT

by

Peroxidation Systems, Inc.

4400 East Broadway, Suite 602

Tucson, Arizona 85711

July 1990

Prepared for Environmental Laboratory

U.S. Army Corps of Engineers, Waterways Experiment Station

3909 Halls Ferry Road, Vicksburg, Mississippi 39160-6199

Under Contract no. DACW39-88-C-0060

TABLE OF CONTENTS

		Page
Preface		i
Part I.	INTRODUCTION	1
Part II.	PROCESS DESCRIPTIONS	5
	Carbon Adsorption	5
	- Background	5
	New Bedford Iostherm Studies	6
	Studies in Treatment of PCB Contaminated Water	7
	Chemical Oxidation	8
	- Background	8
Part III.	PROJECT METHODS AND PROCEDURES	13
	Site Location	13
	Site Conditions	16
	Equipment	17
	- Treatment and Support	17
	- Personnel Protection	25
	Test Procedures	26
	- Activated Carbon	26
	- UV Hydrogen Peroxide Oxidation	27
Part IV.	PRESENTATION AND DISCUSSION OF RESULTS	33
	Secondary Cell	33
	Activated Carbon Systems	37
	UV/Hydrogen Peroxide System	45
	Conclusions	56
Part V.	FULL-SCALE CONCEPTUAL EQUIPMENT DESIGN	58
	Discussion	58
	Design Criteria	59
	Equipment Proposals	60
	- Introduction	60
	- Filtration	61
	- Activated Carbon Treatment Plant	63
	- Photochemical Oxidation Treatment Plant	68
	- Combination Treatment Plant	78
	Economic Analysis	88
	Conclusions	92
APPENDICES		
BIBLIOGRAPHY		

LIST OF FIGURES

		Page
Figure 1	Confined Disposal Facility	14
Figure 2	Secondary Cell	15
Figure 3	FM-3B Filter Module	19
Figure 4	Multiple Column, High Flow GAC System	20
Figure 5	Conventional Test Column	21
Figure 6	**perox-pure**™ Model CW-120/240	23
Figure 7	PM-300B Peroxide Module	24
Figure 8	Photo Chemical Oxidation Treatment Schematic	29
Figure 9	Total and Dissolved PCB Concentration in CDF Discharge	34
Figure 10	PCB Concentration in Secondary Cell During Treatment Studies	36
Figure 11	Total PCB Removal for the Multicolumn Activated Carbon System	38
Figure 12	Total PCB Removal for the Single Column Activated Carbon System	40
Figure 13	Suspended Solids Concentrations Observed During Activated Carbon Study	42
Figure 14	Total Organic Carbon Concentrations Found During Activated Carbon Study	43
Figure 15	Total PCB Destruction at 45 gpm Flow and 100 mg/l H202	46
Figure 16	Total PCB Destruction at 30 gpm Flow and 100 mg/l H202	47
Figure 17	Total PCB Destruction at 15 gpm Flow and 100 mg/l H202	48
Figure 18	Total PCB Destruction at 7.5 gpm Flow and 100 mg/l H202	50
Figure 19	Total PCB Destruction Using 8 Lamps and 50 mg/l H202	51

LIST OF FIGURES (Con't)

		Page
Figure 20	Total PCB Destruction Using 8 Lamps and 100 mg/l H202	52
Figure 21	Total PCB Destruction Using 8 Lamps and at a 30 gpm Flow	53
Figure 22	Total PCB Destruction Using 8 Lamps and at a 7.5 gpm Flow	54
Figure 23	Case I: Activated Carbon Treatment Plant	67
Figure 24	Case II: CW 675/810 **perox-pure**™ Process Flow Diagram	72
Figure 25	Case III: CW 360 **perox-pure**™ Process Flow Diagram	75
Figure 26	Case IV: CW 225 **perox-pure**™ Process Flow Diagram	77
Figure 27	Case V, VI, VII, VIII, IX and X: Combination Process Flow Diagram	80
Figure 28	Operating Costs per 1000 Gallons	95
Figure 29	Total Treatment Costs per 1000 Gallons	98
Figure 30	Total Treatment Costs per 1000 Gallons	99
Figure 31	Total Treatment Costs per 1000 Gallons	100

PREFACE

This study was conducted as part of the Acushnet River Estuary Engineering Feasibility Study (EFS) of Dredging and Dredged Material Disposal Alternatives and as part of the New Bedford Superfund Pilot Study. The U.S. Army Corps of Engineers (USACE) conducted the EFS and the Pilot Study for the U.S. Environmental Protection Agency (USEPA), Region 1, as components of the comprehensive USEPA Feasibility Study for the New Bedford Harbor Superfund Site, New Bedford, MA. This report was prepared for the U.S. Army Engineer Waterways Experiment Station (WES) under Contract No. DACW39-880C-0060. Field work for this project was performed with the technical and logistical support from the New England Division (NED), USACE.

Peroxidation Systems, Inc. (PSI) of Tucson, Arizona provided the pilot study equipment along with technical support from on-site engineers. This report was prepared by Mr. Joseph E. Cothren, PSI, under the direct supervision of Mr. Carl G. Loven, Field Operations Manager, PSI. Field work was preformed by Messers Loven, Cothren, and Ken Rooker.

The contract was monitored by Mr. Daniel E. Averett, Water Supply and Waste Treatment Group (WSWTG), Environmental Engineering Division (EED), WES, under the general supervision of Mr. Norman R. Francinques, Jr., Chief, WSWTG, Dr. Raymond L. Montgomery, Chief, EED, and Dr. John Harrison, Chief, EL. The WES Analytical

Laboratory Group under the direction of Ms. Ann Strong performed chemical analyses for the study.

Commander and Director of WES during this study was Col. Larry B. Fulton. Technical Director was Dr. Robert W. Whalin.

PART I. INTRODUCTION

Polychlorinated Biphenyl (PCB) contamination in the Acushnet River at the New Bedford Harbor, New Bedford, Massachusetts, was first documented by both academic researchers and the Federal Government between the years of 1974 and 1976. Since the initial survey of the New Bedford site, a greater understanding of the extent of PCB contamination has been gained. Sediment concentration range from a few parts per million (ppm) to over 100,000 ppm. The water column in the harbor has been measured to contain PCB concentration levels in parts per billion (ppb).

In August, 1984, the Environmental Protection Agency (EPA) published a Feasibilty Study of Remedial Action Alternatives for the upper Acushnet River Estuary. PCB concentrations in this particular area were greater than the remainder of the harbor. The study proposed five alternatives for clean-up, with four of these proposals dealing with dredging the estuary floor to remove the contaminated sediment, while the disposal of the sediment was to be contained on-site in a disposal facility. Since the public and interagencies voiced negative concerns on the dredging and disposal alternatives, the EPA was prompted to request the assistance of the US Army Corps of Engineers (USACE), New England Division (NED) in conjunction with the USACE Waterways Experiment Station (WES), to perform additional predesign studies for dredging and disposal alternatives in order to develop the technical information necessary to evaluate the engineering feasibility of these alternatives.

In dredging contaminated sediment from a river, as with the Acushnet River, the activities must be carried out in accordance with applicable environmental regulations in order to protect human health and the environment. In some cases, the sediments to be dredged are contaminated with hazardous organic compounds and/or heavy metals. The removal of these sediments by dredging often results in the reentrainment of the contaminants in the water removed during the dredging operation. This water is generally separated from the sediment particulates in the disposal site with the water then being decanted and discharged back into the waterway from which it came. Prior to discharge, this water must often be treated to meet strict discharge regulations. The inability to treat this water adequately can severely restrict necessary dredging activities.

Current treatment typically includes suspended solids removal using techniques such as settling, coagulation, precipitation, and filtration. Various field studies have demonstrated the applicability of the above processes in removing contaminants associated with suspended solids.

Dissolved contaminants remaining in the supernatant after precipitation are more difficult and thus more expensive to remove. Numerous laboratory studies have been conducted on the applicability of activated carbon and various oxidation techniques for the removal of hazardous organics from waste streams. However, little field data are available on actual field operations at dredging sites that would allow for a comparative evaluation of the

effectiveness of dissolved organic treatment processes on dredge disposal site effluents.

In order to obtain such data, the U.S. Army Corps of Engineers developed a dredging demonstration program at the New Bedford Harbor Superfund Site. Part of the program included a study incorporating laboratory and field testing of activated carbon and photochemical oxidation treatment of dredged material disposal effluent for removal of dissolved PCBs. The overall goal of this study was to develop preliminary operating parameters during the laboratory testing and then verify the effectiveness of the two processes under field conditions. The field data generated would also allow for a comparison of the two processes on the basis of capital, operating, and maintenance costs.

Peroxidation Systems, Inc. (PSI) of Tucson, Arizona was contracted by WES to supply pilot test equipment and technical support services to conduct treatability studies on dredged material disposal site effluent at the New Bedford Harbor site. The specific purposes of the testing include:

1) Evaluation of the efficiency of a granular activated carbon (GAC) adsorption system for removal of dissolved PCBs including:
    a) acquisition of data to establish process operating conditions; and,
    b) establishment of design criteria for a high flow rate GAC adsorption system that could be installed at dredging operation sites.

2) Evaluation of the efficiency and cost effectiveness of photochemical oxidation using the **perox-pure™** photochemical oxidation process for the destruction of dissolved PCBs.

The WES Analytical Laboratory Group was assigned responsibility for sample analysis.

PART II. PROCESS DESCRIPTIONS

Carbon Adsorption

Background

Adsorption is the selective transfer of one or more solutes from a fluid phase to a batch of rigid particles. This usual selectivity of sorbent between solute and carrier fluid or different solutes makes it possible to separate certain solutes from the carrier. Similarly, a reverse sorption, desorption, will often bring about the separation of species initially in the solid.

The adsorption process can be pictured as one in which molecules leave solution and are held on the solid surfaces by either chemical or physical bonding. Physical adsorption is the process that occurs most frequently in the removal of wastewater constituents in which the bonds are much weaker than those of chemical adsorption, and are characteristic of bonds formed by Van Der Waals forces. Physical adsorption is generally achieved at ordinary temperatures, while chemical adsorption usually requires higher temperatures.

Since the rigid particles, adsorbent, requires a high surface to mass ratio, then highly porous solids with very large internal surface areas per unit volumes are preferred. Adsorbents are natural or synthetic materials of amorphous or microcrystal structure. Materials used on a large scale include activated carbon, activated alumina, silca gells, or highly porous clays.

Activated carbon has proved very effective in adsorbing organic contaminants from water. In operation, water containing

organic contaminants is passed through a bed of activated carbon at a sufficiently slow flow rate (often expressed as Empty Bed Contact Time) to allow transfer of the contaminants from solution to the carbon particles. Upon exhaustion, the carbon can be thermally or chemically regenerated and reused, or can be disposed.

To determine the applicability of activated carbon to a certain waste stream and to develop preliminary design data, adsorption isotherm testing is generally conducted in the laboratory. Isotherm testing is used to develop contaminant loading rates. The testing is generally accomplished by mixing standard volumes of the waste water with increasing weights of carbon. The mixture is agitated for an appropriate length of time, the carbon filtered out, and the remaining solution analyzed for the contaminant of interest. The analytical results are used to construct the isotherm from which contaminant loading data are developed.

The next phase of testing is the dynamic column test. Activated carbon is placed in a test column through which the water being tested is pumped. Effluent samples are collected and analyzed. The data generated are used to define the performance of the activated carbon with respect to the wastewater being treated. This information can then be used to design a full scale system.

New Bedford Isotherm Study

The carbon adsorption isotherms were developed in the laboratory at WES. Since actual dredging of estuary sediment had

not started at the time of the study, an exact sample from the dredge effluent was unattainable. However, a representative elutriate sample was prepared from sediment grab samples and estuary water that were mixed, allowed to settle, and decanted, thereby emulating water that would be in the Confined Disposal Facility (CDF).

The test carbon was powdered Filtrasorb-300, manufactured by Calgon Carbon Corporation. By using various carbon concentrations in the previously prepared supernatant samples, Aroclor 1254 was found to be the controlling factor for PCB treatment. These isotherms, therefore, were used as the basis for the GAC pilot test setup by PSI. Development of the isotherms by WES, with complete documentation of procedures and graphs, appear in Appendix A.

Studies in Treatment of PCB Contaminated Water

Several studies have demonstrated the effectiveness of carbon adsorption in the treatment of a supernatant contaminated with PCBs, however, mainly under laboratory conditions. Only a few actual field applications exists, mostly by or under the direction of the EPA. These sites had success by dredging the sediment then depositing the water and sediment into a contained settling basin. Afterwards, the decanted water was treated thorugh an activated carbon system. The effluent stream was tested to be at or below the regulated standards for discharge for that particular time in history. The EPA had developed a mobile unit around 1975, equipped with a multiple column activated carbon system that was moved to

different sites. However, the most important element in successful treatment was a good clarification and/or filtration of the supernatant before treatment. The collection of the suspended solids in or on the carbon beds greatly reduced the life of the beds.

J.P. Lafornara (1978) reported that supernatant from the contaminant vessel was treated from approximately 400 μg/l of PCBs to 3 μg/l of PCBs by passing the water through a series of three carbon columns, with a total Empty Bed Contact Time (EBCT) of approximately thirty-five minutes. A second pass through the carbon system lowered the concentration to 0.075 μg/l of PCBs. Kane et.al. (1986) reported that the PCB concentration of the water in a confined disposal site was reduced from a range of 30 μg/l to 50 μg/l to either to, or less than, 0.5 μg/l. As with the Lafornara study, Kane reported that the EBCT of the supernatant with the carbon had to be thirty minutes or greater.

Chemical Oxidation

Background

Chemical oxidation is the breaking apart of complex molecules by a strong oxidizing agent. The goal is to destroy toxic contaminant molecules by breaking them down into non-toxic products such as CO_2 and H_2O. Chemical oxidation is a "clean" process since no residue requiring disposal or further treatment is generated. Ozone, hydrogen peroxide, chlorine, and others listed in Table 1 are strong oxidizing agents typically used in chemical oxidation.

However, chlorine oxidation can present problems due to the formation of intermediate chlorinated organic compounds, some of which are highly toxic. Furthermore, the other common oxidants either contain halogens or metals which may cause undesirable by-products if the oxidation reaction is incomplete.

Both ozone and hydrogen peroxide (H202) form hydroxyl radicals under ultraviolet (UV) light catalysis, which are very powerful oxidizing agents as shown in Table 1. However, hydrogen peroxide is a more cost-effective reactant because each molecule of peroxide forms two hydroxyl radicals (Hager and Smith, 1985). In addition, there are other properties of H202 which make it inherently safer, easier to apply and more environmentally acceptable than alternate oxidants. These advantages of H202 as a preferred reactant are summarized in Table 2.

Table 1

Oxidation Potential of Oxidants*

Relative Oxidation Power (Cl2=1.0)	Species	Oxidative Potential (Volts)
2.23	Fluorine	3.03
2.06	Hydroxyl Radical	2.80
1.78	Atomic Oxygen (singlet)	2.42
1.52	Ozone	2.07
1.31	Hydrogen Peroxide	1.78
1.25	Perhydroxyl Radical	1.70
1.24	Permanganate	1.68
1.17	Hypobromous Acid	1.59
1.15	Chlorine Dioxide	1.57
1.10	Hypochlorous Acid	1.49
1.07	Hypoiodous Acid	1.45
1.00	Chlorine	1.36
0.80	Bromine	1.09
0.39	Iodine	0.54

* Hager and Smith, 1985.

Table 2

Hydrogen Peroxide Advantages as a Chemical oxidant*

- A safe, readily available chemical
- No toxic fumes or gases
- Easily stored and pumped
- Infinite solubility in water
  - No mass transfer problems associated with gases
  - Unlimited dosing capability
- Contains no halogens or metals
- Degradation products are O2 and H2O
- Minimal capital investment
- The most cost-effective source of hydroxyl radicals

* Hager and Smith, 1985.

Ultraviolet light, in conjunction with hydrogen peroxide (**perox-pure™** Process), catalyzes the chemical oxidation of organic contaminants in water by its combined effect upon the organic contaminant and its reaction with hydrogen peroxide. Many organic contaminants absorb UV light and may undergo a change in their chemical structure, or become more reactive to chemical oxidants. As mentioned above, UV light catalyzes hydrogen peroxide molecules to form two hydroxyl radicals from one molecule. These very powerful chemical oxidants, being second only to fluorine in oxidative power, then react with the organic contaminants in the water.

For a simple example, the reaction of formic acid with UV catalyzed hydrogen peroxide illustrates this photochemical oxidation process pathway (Hager and Smith, 1985):

$$H_2O_2 \xrightarrow{\text{UV Source}} 2\ OH$$

$$HCOOH + OH \longrightarrow H_2O + HCOO$$
$$HCOO + OH \longrightarrow H_2O + CO_2$$

The oxidation of PCB molecules is a more complex process in that no particular pathway can be easily established as with formic acid. Since the PCB molecule is an aromatic, the oxidation takes place in only a fraction of a second, thereby only the end products of carbon dioxide, water, and small traces of hydrochloric acid can be found (for a more detailed account of the oxidation process see Appendix C).

To determine the applicability of chemical oxidation to a certain waste stream, laboratory scale testing is generally conducted. Samples of the waste stream are treated in a laboratory scale oxidation chamber using various dose rates of the oxidizing agent and UV energy at various reaction times. In addition, the effects of pH, temperature, and catalyst addition are generally evaluated. Samples of the treated water from the reactor are analyzed for the contaminants of concern and potential intermediates. The data generated are used to define the performance of the chemical oxidation process with respect to the wastewater being treated. In some cases, this information can be used to design a full-scale system. The lab information is used to establish operating parameters for field scale testing in a larger reactor usually at the site. The field scale data are then used to design a full-scale system.

However, for this particular test, due to Federal regulations, the PCB contaminated water was not shipped to the PSI lab for preliminary testing. Therefore the field study had to cover the scope of test parameters.

PART III. PROJECT METHODS AND PROCEDURES

Site Location

The New Bedford test site was located at the east end of Sawyer Street adjacent to the Acushnet River, which is the main artery of New Bedford Harbor. A containment basin identified as the Confined Disposal Facility (CDF), was constructed at the edge of the estuary to contain the dredged material (see Figure 1). The CDF consisted of a primary and secondary cell. Dredged material was pumped into the primary cell where the sand, silt and other solids were allowed to settle out. The decant from the primary cell ran through a weir, constructed in the sheet pile wall separating the cells, into the secondary cell. A polymer was added to the water at this point to enhance settling in the secondary cell. Water for conducting the treatability studies was pumped from the secondary cell.

PCB contaminated sediment was pumped into the CDF for a period of 23 days between 21 November 1988 and 19 December 1988. Clean sediment was pumped into the CDF for a period of 11 days between 20 December 1988 and 4 January 1989. Water began flowing over the weir into the secondary cell on 23 December 1988. Prior to this time water seeped into the secondary cell through leaks in the weir and sheet piling.

The PSI field equipment was positioned on the southern berm adjacent to the secondary cell (see Figure 2). Originally, the equipment was to be located adjacent to the northwest corner of the secondary cell next to the discharge pipe. However, the site was

FIGURE 1

CONFINED DISPOSAL FACILITY

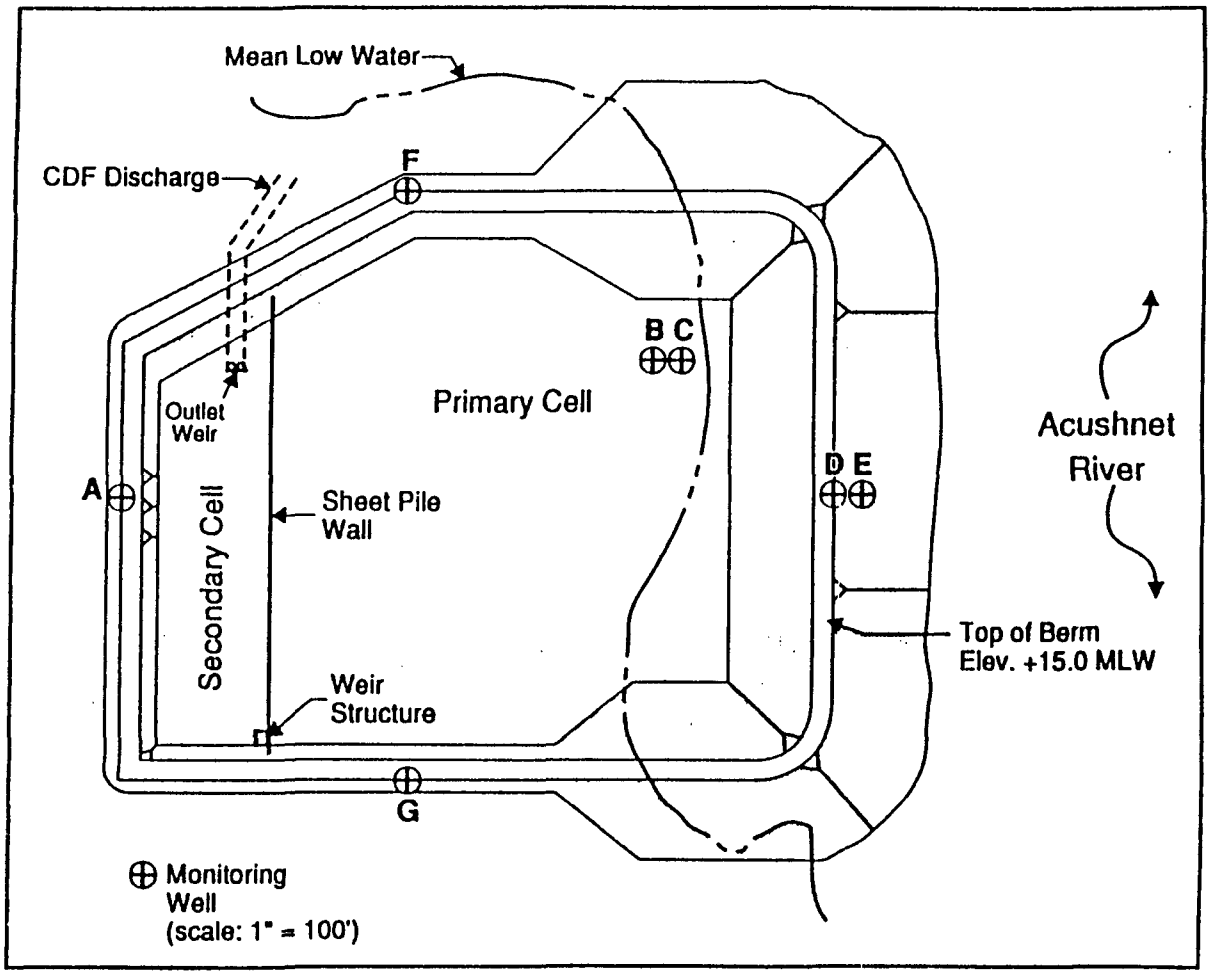

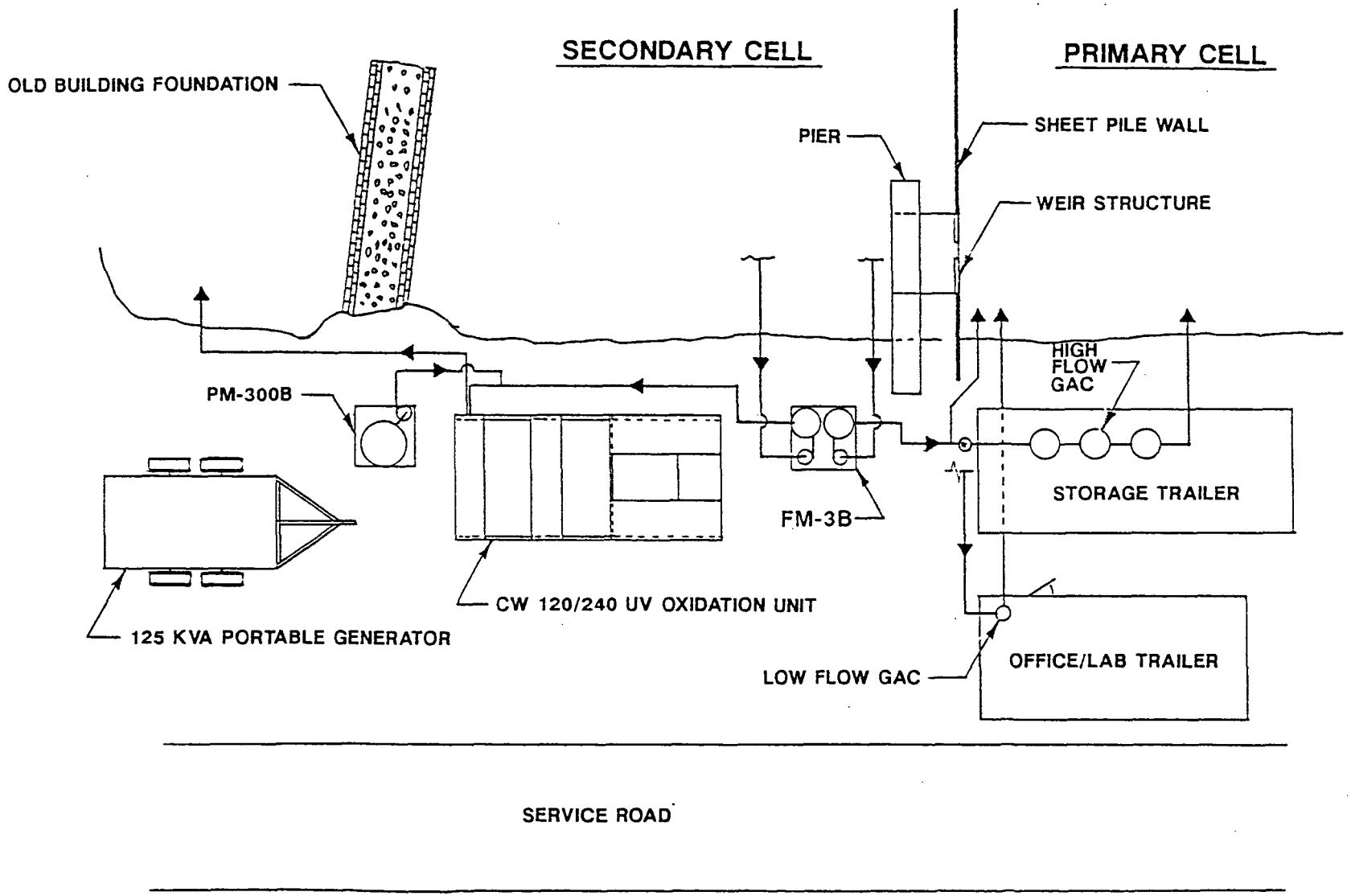
SECONDARY CELL
PRIMARY CELL
OLD BUILDING FOUNDATION
PIER
SHEET PILE WALL
WEIR STRUCTURE
HIGH FLOW GAC
PM-300B
STORAGE TRAILER
FM-3B
CW 120/240 UV OXIDATION UNIT
125 KVA PORTABLE GENERATOR
LOW FLOW GAC
OFFICE/LAB TRAILER
SERVICE ROAD

FIGURE 2

changed to facilitate obtaining the necessary power from the office trailer compound, which was located south of the secondary cell. In addition, the water in the secondary cell was deeper along the southern berm allowing the pumping of water to the treatment system without entraining air into the suction hose.

Site Conditions

The start-up schedule was delayed for approximately ten weeks due to construction problems, therefore, dredging did not start until the middle of November. Sufficient water had accumulated in the secondary cell by the first week of December to begin the treatment tests. Equipment was set up starting 5 December 1988 and testing initiated on 8 December. On 10 December, a cold front moved into the area and the temperature dropped to 15°F overnight with a high temperature the next day around 30°F. The overnight low for 11 December dropped to 0°F. The low temperature coupled with high winds out of the northwest, caused the surface of the cells in the CDF to be frozen to a depth of four to six inches by the morning of 12 December. In addition, the suction lines leading to the circulation pumps were frozen and could be neither thawed or removed. Because of the cold weather, the dredging operation, which was supplying water to the CDF, was curtailed for approximately five days, which resulted in a drop in the water level in the secondary cell due to leakage from the CDF back to the estuary.

By the afternoon of 15 December, holes were broken through the ice and new suction lines were installed. Due to the drop in the

water level, the suction lines had to be lengthened in order to pump from deeper water, which reduced the amount of sand that was pumped off the bottom. As testing continued into January, the ice had almost completely melted. This, in turn, may have allowed the cell to be diluted with fresh water, in that the ice cap may have allowed both the suspended solids containing PCBs and PCB located near the floor of the cell to settle to the bottom, becuase the ice cap interferred with the natural convection currents of the water body, and also prevented surface mixing that would result when dredged water was pumped into the CDF. Samples from the secondary cell showed a slight drop in the PCB concentration after 16 December (see Figure 9).

Equipment

Treatment and Support

PSI was contracted to provide the field treatment equipment and the required support equipment to conduct the field treatability studies. Two mobile testing trailers were deployed on site to house equipment and supplies and to serve as an on-site laboratory and office. The trailers were equipped with space heaters to keep the equipment from freezing.

Sand Filter. A filtration unit, manufactured by PSI, was used to filter the water from the secondary cell prior to treatment testing by either carbon adsorption or chemical oxidation. The FM-3B Filter Module consisted of two sand filters operated in parallel. Each filter contained approximately 2.5 cubic feet of No. 20 sieve

silica sand, which was approximately one to one and a half millimeters in diameter. Separate pumps were used to pump water from the secondary cell, through the individual filters, and to the treatment equipment (see Figure 3). One filter unit was plumbed to the carbon adsorption equipment and the other one was plumbed to the chemical oxidation equipment.

Activated Carbon. Two different activated carbon treatment systems were set up, one a multi-column system and the other a single column system. The multi-column system consisted of three, 24-inch diameter, stainless steel columns connected in series with sampling ports between each column. The carbon used was Calgon Carbon Corporation, Filtrasorb 300, 8 x 32 mesh. Each column was charged with approximately 85 pounds of activated carbon representing 2.4 cubic feet (see Figure 4). The system was operated in a down-flow mode. Water was supplied from one of the filtration units. A bypass line was installed prior to the first column to facilitate controlling flow through the system. A flow meter with an accumulator was used to monitor and record the flow. The discharge from the system was returned to the primary cell. All lines to and from the system were insulated to prevent freezing.

The single column activated carbon system was constructed of 12-inch diameter, stainless steel pipe. The column had a depth of 60 inches and held approximately four cubic feet of carbon. The column had sample ports located at 42 inches and 60 inches above the bottom of the column (see Figure 5). The system was operated in an up-flow mode.

FIGURE 3

FM-3B FILTER MODULE

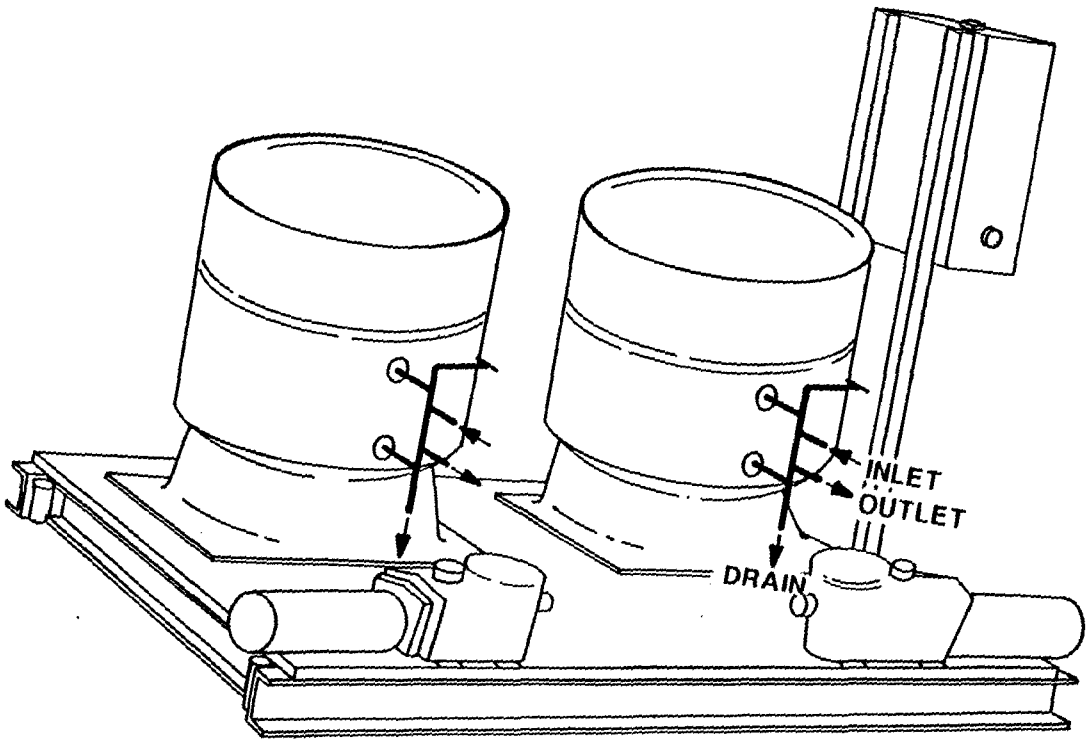

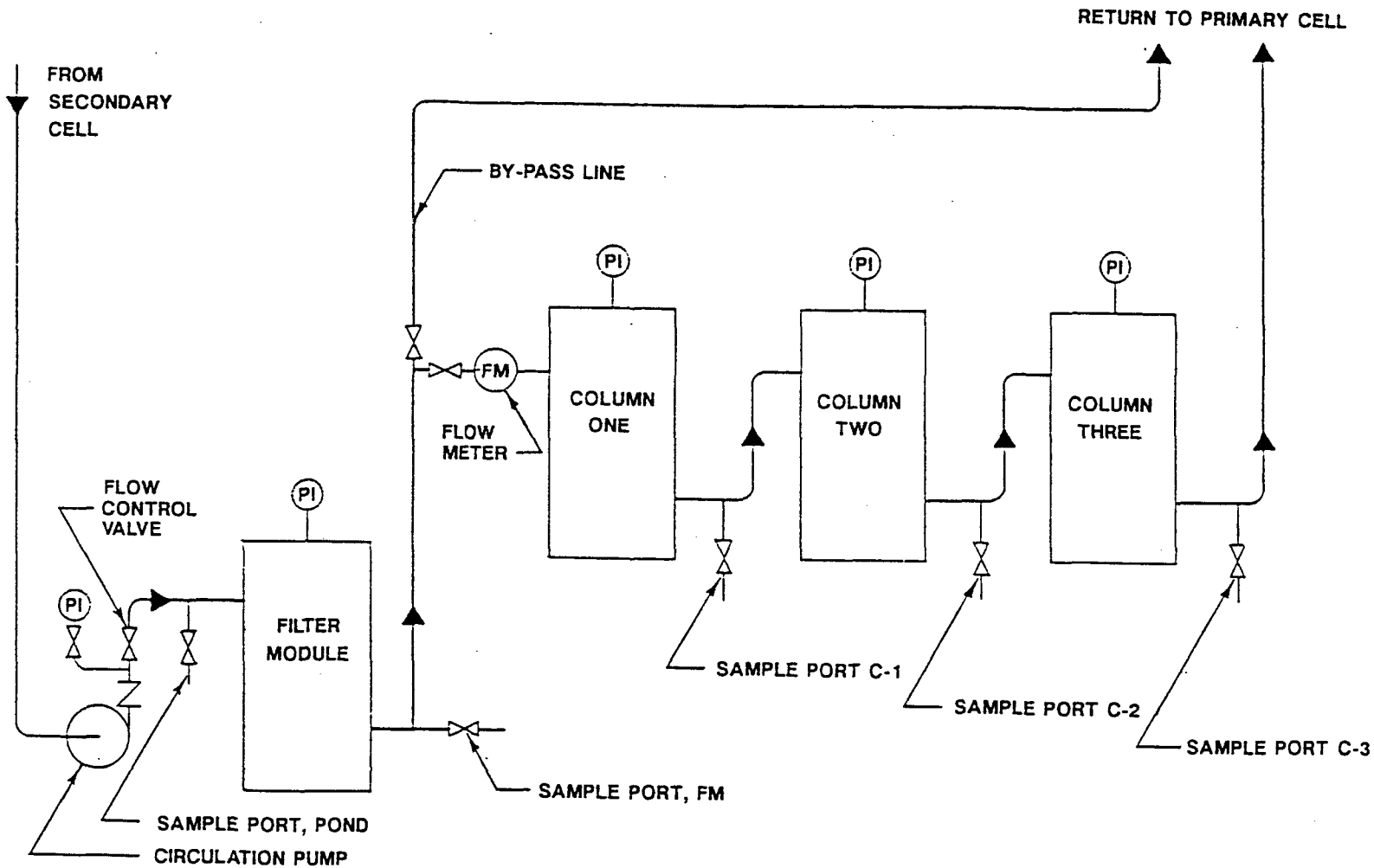

FIGURE 4

MULTIPLE COLUMN, HIGH FLOW GAC SYSTEM

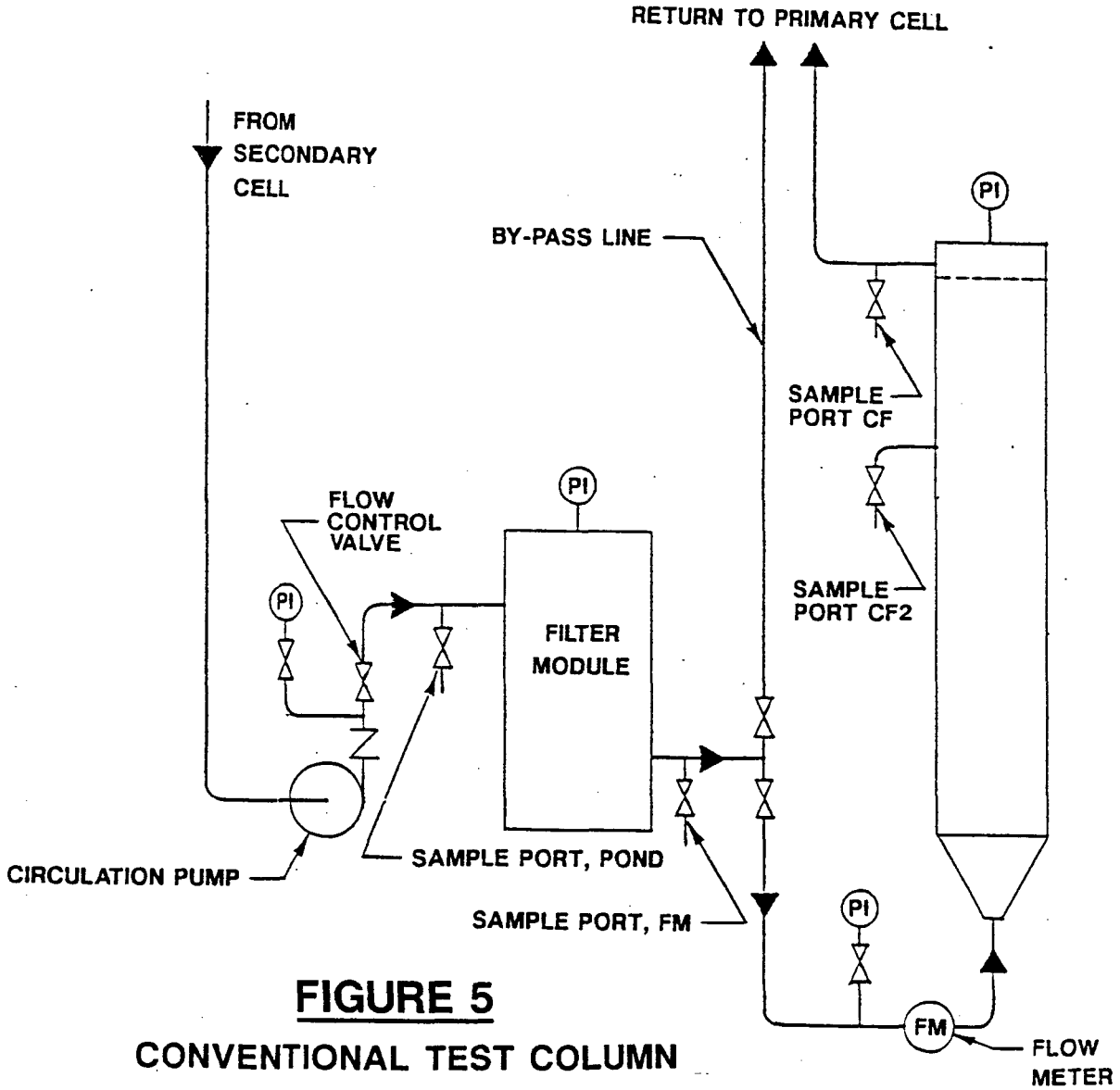

FIGURE 5

CONVENTIONAL TEST COLUMN

As with the multicolumn GAC system, this system was supplied with water from one of the filtration units, however, not concurrently with the multicolumn unit. A flow meter with an accumulator was used to meter the flow. A valved by-pass line was used to control flow, with the discharge from the system returning to the primary cell. The equipment was set up in the office/laboratory trailer to prevent it from freezing. All lines to and from the system were insulated.

Chemical Oxidation. The chemical oxidation system consisted of a Model CW-120/240 **perox-pure™** photochemical oxidation treatment unit manufactured by PSI (see Figure 6). The Model CW-120/240 was equipped with two oxidation chambers containing eight high energy UV lamps each. However, only one chamber was used for this experiment. The effective chamber volume was 160 gallons with the UV lamps arranged in two columns with four horizontal lamps per column, running the full length of the chamber. Electrical power was supplied by a 125 KVA diesel powered generator since 480 VAC of sufficient amperage was not available at the site.

A Model PM 300B Peroxide Module manufactured by PSI was used to meter and inject peroxide into the treatment unit (see Figure 7). The Peroxide Module was equipped with a 300 gallon hydrogen peroxide storage tank. Peroxide was pumped by two fourteen gallons

FIGURE 6

perox-pure™

MODEL CW-120/240

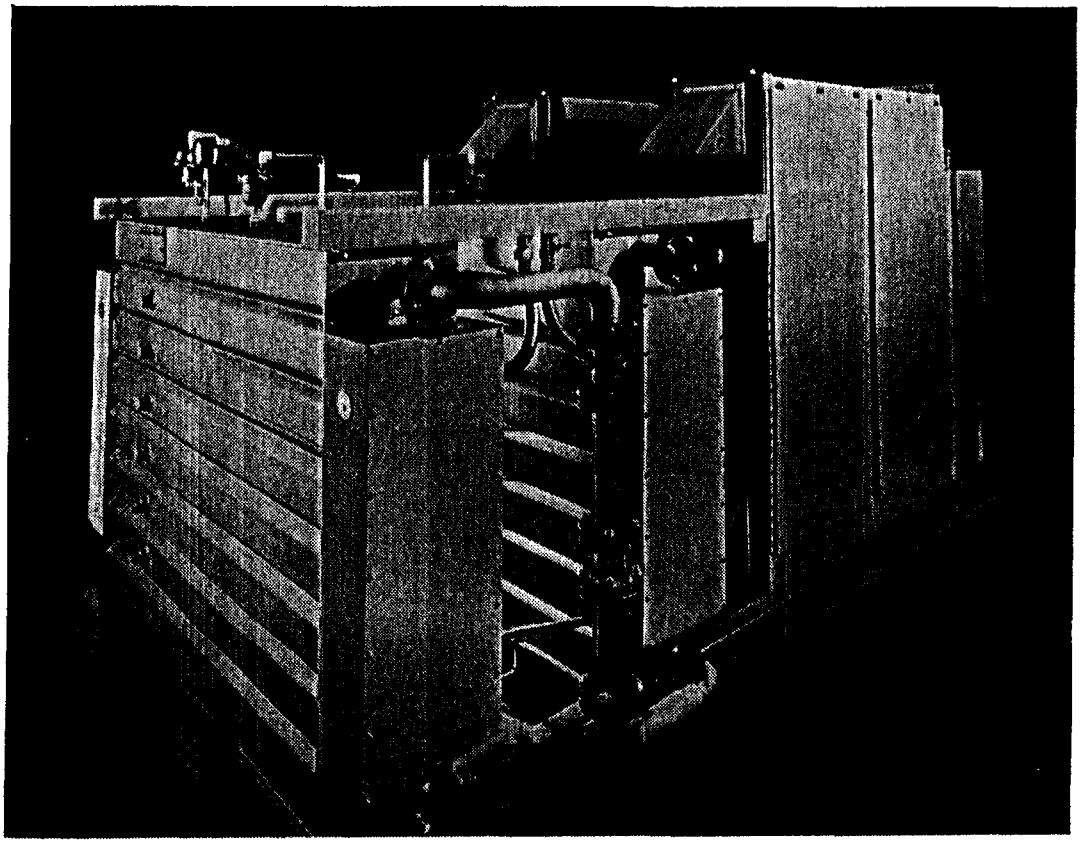

FIGURE 7

PM-300B PEROXIDE MODULE

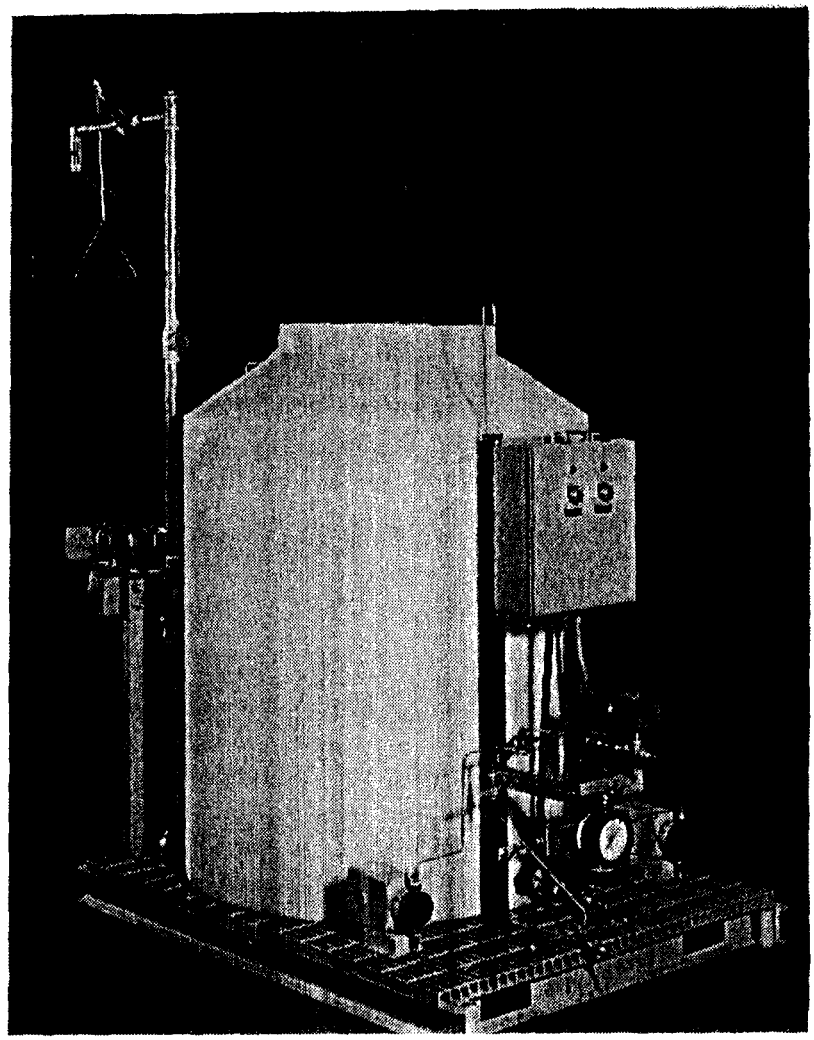

per day (twenty-four hours) adjustable, positive displacement metering pumps. The adjustment of the injected flow of the pumps is the product of both stroke volume and stroke frequency. The peroxide was pumped into the influent stream of the treatment unit through a 0.25-inch diameter polyethylene tube and terminating at the injection point with an injection check valve.

Water was supplied to the system from one of the filtration units. A flow meter with an accumulator on the CW 120/240 was used to monitor and record the flow. The lines into and out of the system were equipped with quick-connect couplings to facilitate draining the system at the end of each test run to prevent freezing, since operation was restricted to daylight hours.

Personnel Protection

Since the operational procedures associated with field testing required the handling of and exposure to water contaminated with PCBs and toxic metals, certain precautions were necessary to protect site personnel. PSI submitted a health and safety plan (HASP) in accordance with requirements prescribed by the Army Corps of Engineers New England Division covering the planned activities at the site by PSI personnel. The HASP specified protective equipment and procedures to be used on site by PSI personnel.

Safety glasses, face shields, Tyvek coveralls, rubber boots, and Viton gloves were worn by PSI personnel when connecting or disconnecting hoses between the equipment and when taking samples of potentially contaminated water. Safety glasses, tyvek suits and nitrile gloves were used when personnel were working with hydrogen

peroxide. Hard hats were worn outside the trailers. Emergency equipment was maintained on site including first aid supplies, respirators, and spill response supplies. Decontamination procedures were posted and followed on a daily basis.

Test Procedures

Activated Carbon

The field testing of activated carbon was based on the isotherms developed by WES conducted on samples of sediment elutricate from New Bedford Harbor (see Appendix A). After the equipment was checked out, water from the secondary cell in the CDF was pumped through the Filter Module, through a flow meter, and then through one of the carbon systems; either the multi-column unit or the single column unit. In the multi-column system, the water was pumped through the three columns in series. As previously mentioned, the effluent was returned to the primary cell of the CDF. The flow rate was set at 15 gpm for the first phase of the test. The system was operated continuously 24 hours per day. After each 24-hour period, samples were collected from each sampling port for analysis. Also, meter readings of flow rates and accumulated flow were recorded each day. The second phase consisted of the flow rate being at 2.0 gpm, with the system being monitored as above.

Operation of the single column system was similar to the multi-column system. The water was pumped through the single column at a flow rate of approximately 2.0 gpm. The system was operated continuously 24 hours per day. After each 24-hour period,

samples were collected from each sampling port for analysis and flow meter readings were recorded.

Since the goal of the sampling program was to gather data establishing PCB breakthrough, total PCB removal was not the intent. Shorter EBCTs, other than the thirty minute required per the above mentioned case studies, were used in order to shorten the breakthrough time. The multi-column carbon system was used in order to extract sample data from within the total effective carbon column. By sampling the effluent of each column, the data could be used to generate a wave front curve of PCB adsorption. The initial flow rate of 15 gpm resulted in an EBCT of 3.6 minutes, with an EBCT of 72 seconds per column. The second phase flow rate of 2.0 gpm resulted in an EBCT of 27.3 minutes, with an EBCT of 9.1 minutes per column. The single carbon column, with an EBCT of 14.5 minutes at a flow rate of 2.0 gpm was deployed as a back-up data source for the multicolumn unit. Samples were transported to WES for analysis. Selected samples were analyzed for various PCBs, suspended solids, TOC, and heavy metals.

UV/Hydrogen Peroxide Oxidation

As mentioned above, no preliminary laboratory testing was performed by PSI due to regulations prohibiting the reception and disposal of PCB contaminated water by the PSI laboratory. Since PSI was not permitted to do such at this particular time, the field testing had to serve as the lab data, gathered on-site using field equipment.

After the equipment was checked out, water from the secondary cell in the CDF was pumped through the Filter Module, through a flow meter, and into the oxidation chamber. Three operational parameters, flow rate (or retention time), UV energy dose, and peroxide dose, were varied during different test runs so that sufficient data could be generated to assess their relative effects (see Figure 8).

Water from the secondary cell was supplied to the system by the circulation pump mounted on the filter module. Flow was controlled by the flow control valve, preceding the sand filter, and monitored by the flow meter sensor mounted in the influent spool. The flow meter was mounted in the control cabinet of the CW 120/240. By observing the flow meter while adjusting the flow control valve, the flow rate was easily changed.

The flow rate, recorded in gallons per minute (gpm), is directly proportional to the effective retention time that the test water is in contact with the UV source. For this particular oxidation chamber the effective retention volume was 160 gallons. Retention time is one of the most important variables, in that most organic substances have different oxidation rates. In order to have complete oxidation of the organics, substance oxidation rates have to be considered.

The second independent operational parameter that was monitored was the UV intensity. Although the UV intensity can be easily changed by having a select number of lamps either on or off, the UV dose is a function of both the wattage of UV lamps being used and the retention time. Therefore, the UV dose is dependent

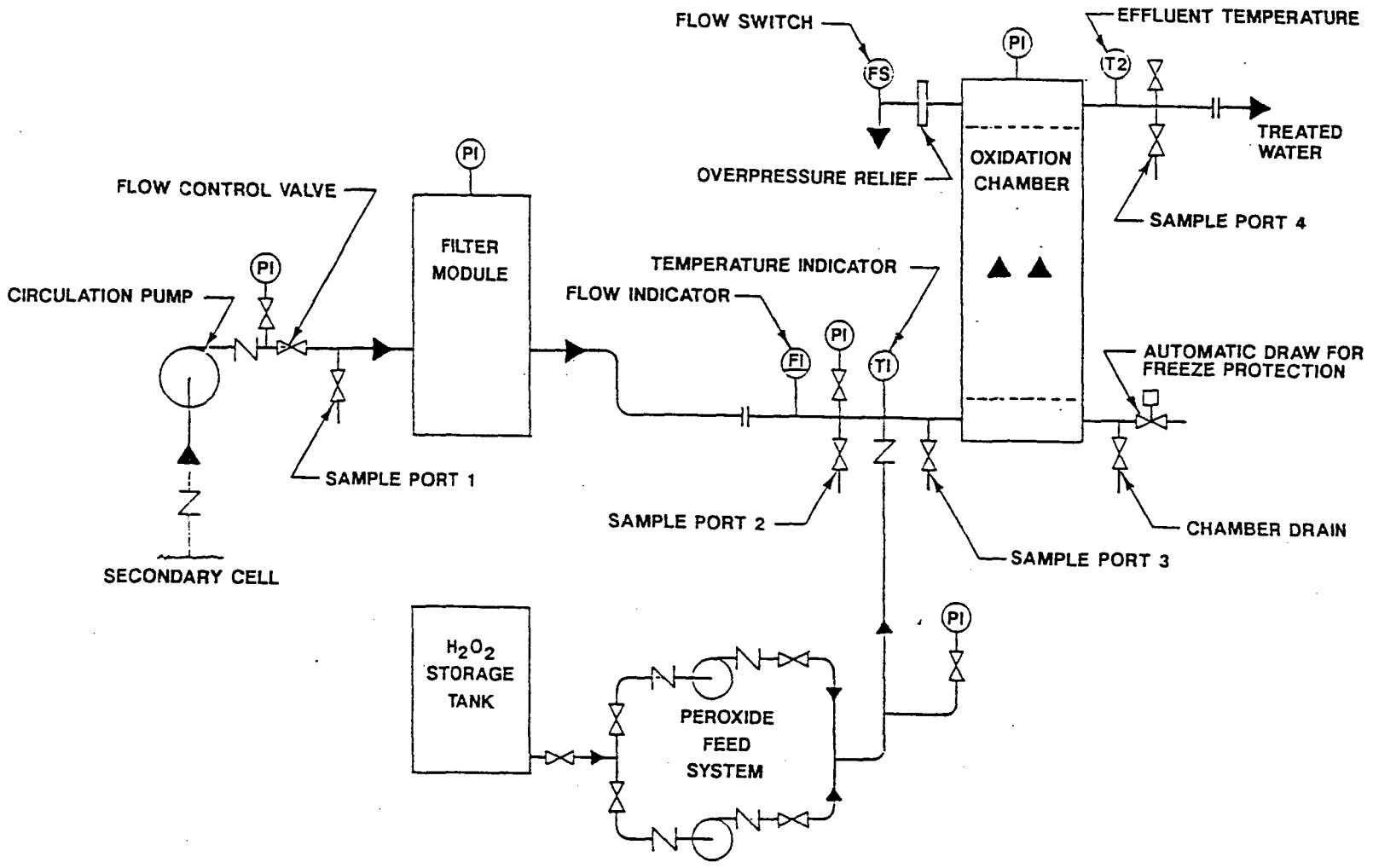

FIGURE 8

PHOTO CHEMICAL OXIDATION TREATMENT SCHEMATIC

on both flow rate and the number of lamps in operation for a particular test.

UV energy dose is mathematically expressed as the product of watts and hours, divided by unit volume. From this equation the cost of electrical power may be calculated for each unit volume of treated water.

A variable that is dependent on both flow rate and UV intensity is the change in water temperature, dT, which is mathematically, the effluent temperature, T2, minus the influent temperature, T1. dT is inversely proportional to the flow rate and directly proportional to the UV intensity. This is illustrated in Table 3.

Table 3

UV Intensity/dT Comparison

Flow Rate	UV Intensity	dT
Increases	Constant	Decreases
Decreases	Constant	Increases
Constant	Increases	Increases
Constant	Decreases	Decreases

The temperature of the reaction is important, in that it corresponds to the energy level of the chemical oxidation level in the oxidation chamber. Influent and effluent temperatures were monitored by thermometers T-1 and T-2, respectively (see Figure 8).

The third operational parameter that was tested was the hydrogen peroxide dose. The peroxide dose is dependent on two main factors: one is the total organic carbon (TOC) concentration in the test water, expressed in either parts per million (ppm) or parts

per billion (ppb) and, two, is the flow rate of the water entering the oxidation chamber, since the peroxide concentration is also recorded in ppm. The peroxide was injected into the influent spool, which is a specially arranged section of pipe, conducive for chemical injection. The influent dosage was monitored at Sample Port 3, using peroxide test strips (see Figure 8).

In order to establish the proper peroxide dosage, the step by step procedure outlined in Appendix B would normally be used. However, since only an estimated value of PCBs was available and the TOC concentration was not available, an array of influent peroxide concentrations was run with each flow rate. The effluent peroxide count was monitored in order to guarantee that the process was not peroxide starved by adjusting the influent concentration so that at least one ppm of peroxide exited the oxidation chamber. Afterwards, Appendix B was used to reverse extrapolate the volume of peroxide used per day. All the above test parameters were recorded for each test run, in order to develop the data base required to design a full-scale system.

After adjustment of an operating parameter, three chamber volumes of water were allowed to pass through the system prior to sampling. This provided sufficient time to establish equilibrium conditions. For each set of run conditions, influent and effluent samples were collected. Samples that were collected from the pond (secondary cell) were taken at Sample Port #1, Filter Module (FM) at Sample Port #2, and as mentioned above, the influent peroxide dose was monitored at sample Port #3 and effluent samples were taken from Sample Port #4 (see Figure 8). These samples are

respective of those listed in the test data in Appendix H. Samples were iced down and transported overnight to WES for analysis. Selected samples were analyzed for various PCBs, suspended solids, TOC, and heavy metals.

PART IV. PRESENTATION AND DISCUSSION OF RESULTS

The results of the sample analyses conducted and provided by WES are reproduced in Appendices F, G, and H. These include individual and total PCBs, total suspended solids, and total organic carbon. Not all samples were analyzed for every parameter. Selected results from these analyses have been summarized in the form of graphs which are presented in this part of the report. Sample results from the secondary cell, activated carbon system, and photochemical oxidation system are discussed below.

Secondary Cell

The effluent from the CDF was discharged from the secondary cell back to the estuary. NED personnel collected samples of the discharge during the dredging operation. These samples were analyzed for total and dissolved PCBs. The results of these analyses are graphically presented in Figure 9. As indicated in the graph, the total PCB concentration in the CDF discharge decreased significantly between 19 December and 22 December. NED (1989) data indicated that an average of eighty three to eighty eight percent of the total PCB concentration was associated with particulates in the effluent from the CDF. As discussed previously, PCB contaminated sediment was pumped into the CDF only through 19 December 1988, at which time clean sediment was placed in the CDF as capping material. The drop in PCB concentration occurred rapidly once clean sediment was pumped into the CDF.

FIGURE 9

TOTAL AND DISSOLVED PCB CONCENTRATION IN CDF DISCHARGE

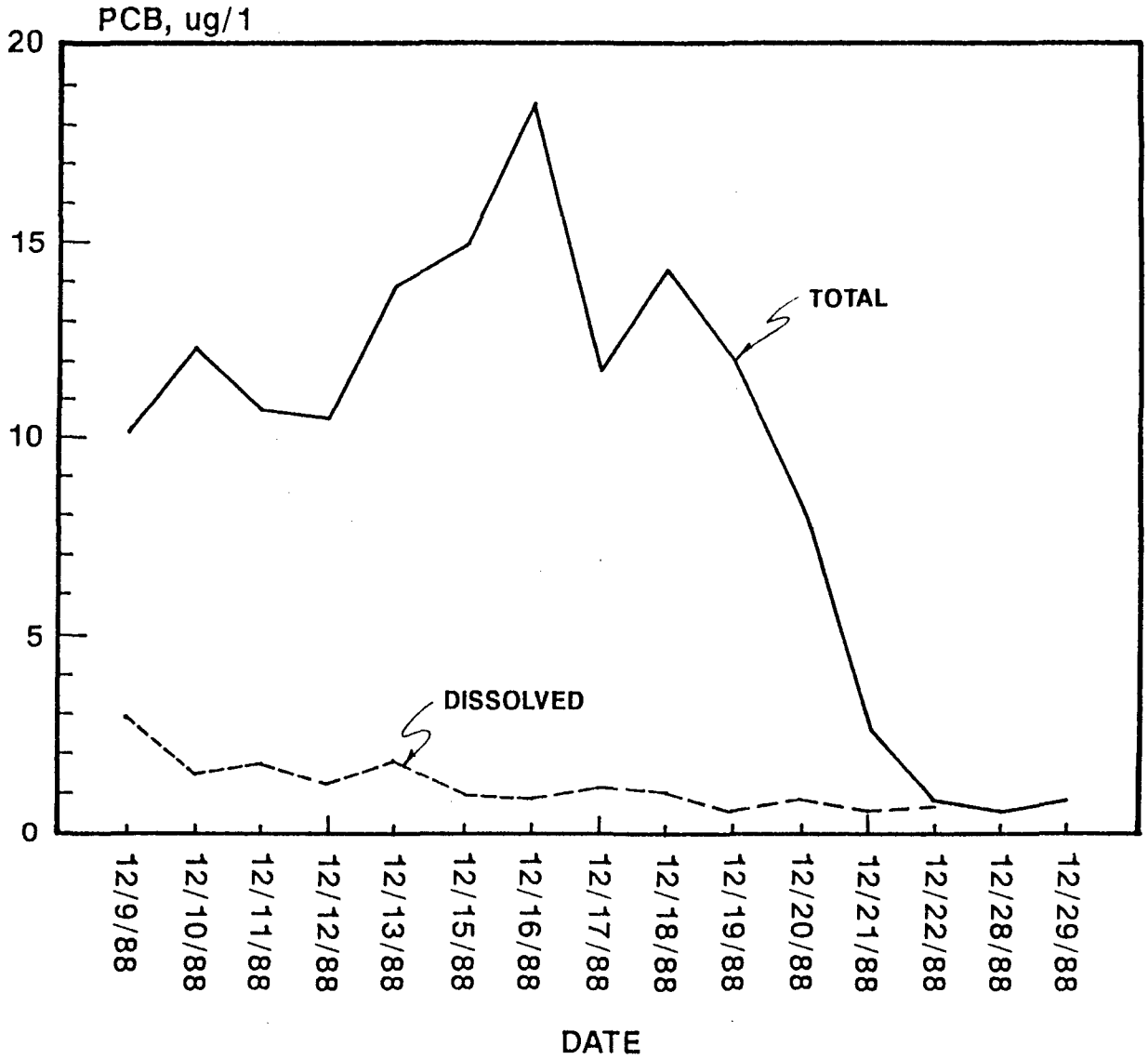

(SOURCE: NED, 1989)

The concentrations of total PCBs in the influent to the treatment systems over the study period are graphically presented in Figure 10. As would be expected, this graph shows the same rapid decrease in PCB concentrations during the 19 December and 22 December period.

In addition to the change in dredging conditions, the changes in the site conditions due to the freezing weather may have also had an impact on the PCB concentrations. The layer of ice over the cell resulted in very quiescent conditions in the cell probably resulting in the settling of additional fine grained particulate. Such a situation could potentially result in a decrease in PCB concentration since PCB's tend to adhere to the surface of such particulates.

Also, the freezing and thawing of the ice layer could have resulted in the establishment of a fresh water layer in the cell. Such stratification could also affect the PCB concentration. Unfortunately, none of these effects could be assessed at the time since results of the PCB analyses were not available until after the project was completed.

The treatment studies were initiated during the period when the PCB concentrations in the secondary cell were still relatively high. However, the freezing weather delayed the continuation of most of the studies until after the PCB concentrations had decreased. As indicated in Figure 10, total PCB concentrations in the influent to the treatment systems after 21 December were only slightly above the detection level of 0.5 ppb. These results are further discussed in the next two sections.

FIGURE 10

PCB CONCENTRATION IN SECONDARY CELL DURING TREATMENT STUDIES

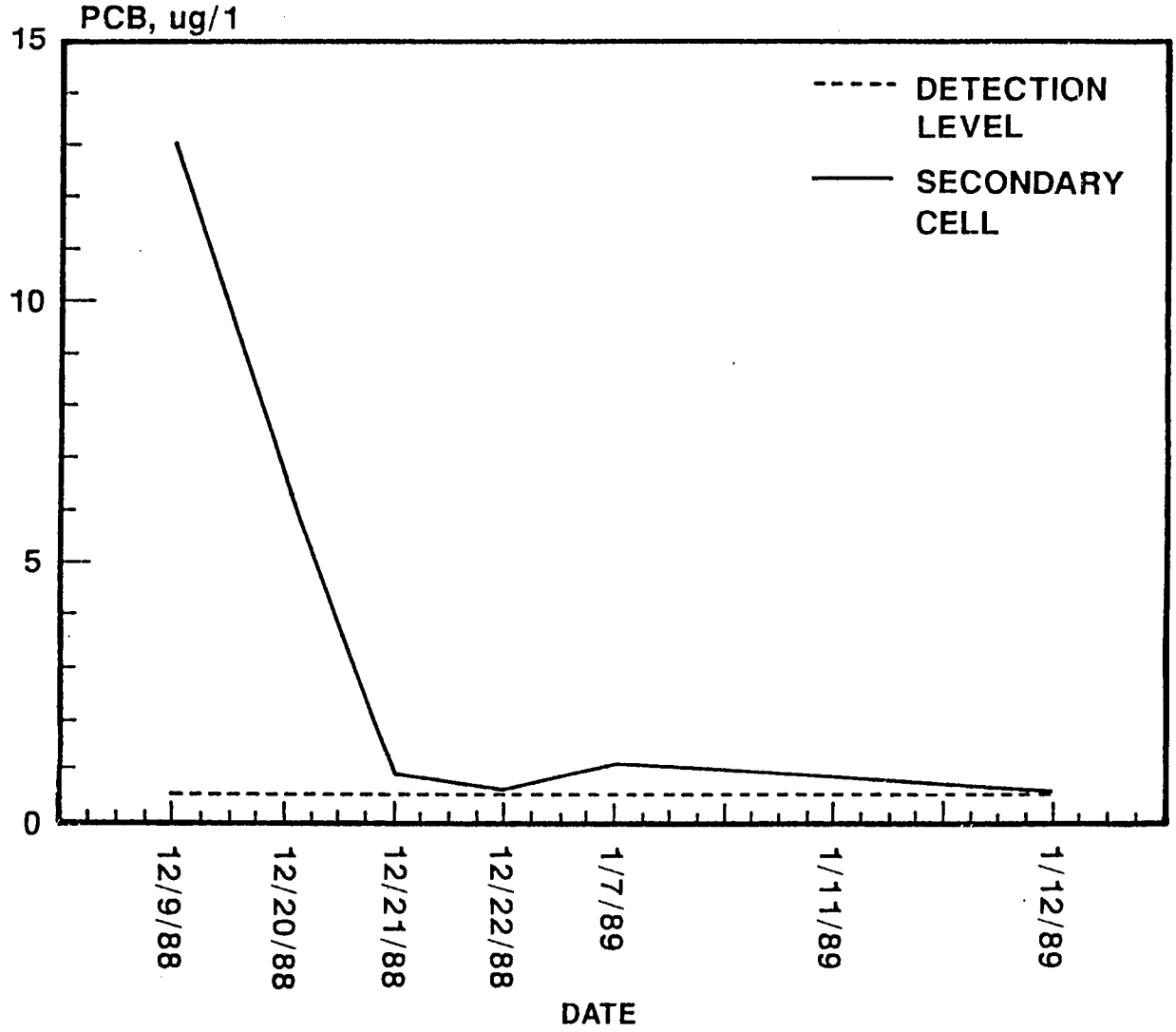

Activated Carbon Systems

The results of the total PCB analyses conducted on the samples collected during operation of the multi-column activated carbon system are presented graphically in Figure 11. The sample collected on 9 December at a flow rate of 15 gpm indicates a total PCB concentration in the influent of 13 ppb. Approximately 40 percent of the total PCBs were removed by the Filter Module. The results indicate that no additional PCBs were removed by the activated carbon.

The freezing weather resulted in the equipment being out of operation for approximately 10 days. The next round with the flow rate of 2.0 gpm of samples were collected starting on 20 December. By this time, the total PCB concentration in the influent had decreased to 6.6 ppb. Unfortunately, the effluent sample from the filter module was not analyzed and therefore the amount of PCB removed by the filter module is not known. The total PCB concentrations in the samples collected after the first and third carbon columns were above the concentration in the influent indicating very little or no removal of PCBs.

By 21 December, the total PCB concentration in the influent had decreased to 0.9 ppb. Sample results from the filter effluent indicate no removal of PCB. The concentrations in the samples collected after each column were at or below the detection level of 0.5 ppb.

FIGURE 11

TOTAL PCB REMOVAL FOR THE MULTICOLUMN ACTIVATED CARBON SYSTEM

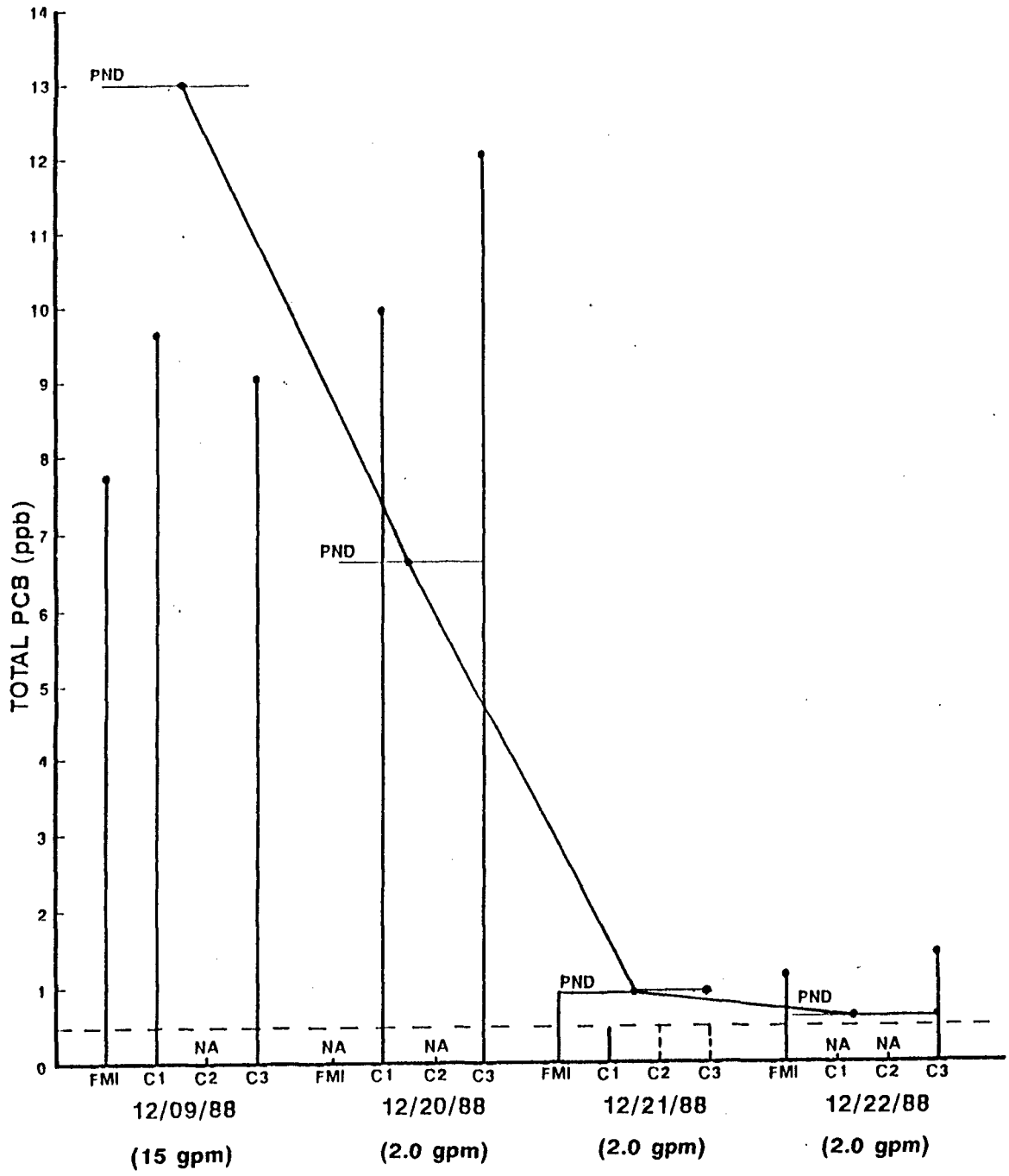

On 22 December, the total PCB concentration in the influent was 0.6 ppb. Only the samples of the filter effluent and the effluent from the third column were analyzed. Both concentrations were above the influent concentration; indicating no PCB removal.

The results of the total PCB analyses conducted on the samples collected during operation of the single column activated carbon system are presented graphically in Figure 12. The first round of samples were collected on 6 January. The influent sample to the filter module and effluent sample from the column were not analyzed. The effluent sample from the filter had a total PCB concentration of 0.7 ppb, while the sample collected from the lower port in the carbon column had a concentration of 1.9 ppb.

Samples were collected from the system for a period of six more days. During this time, the concentration in the influent to the filter module decreased from 1.1 ppb to 0.6 ppb. Over this period, the data indicates that the filter module generally removed from 20 to 30 percent of the total PCB except on 7 January and 12 January when the results indicated no removal. PCB concentrations in the samples collected from the two ports on the carbon column were generally at or below the detection level. These may not represent significant reductions since the influent concentrations were so low. Also, since the PCB concentration in the CDF fell from 13 ppb to less than 1 ppb by the end of the test period, there is a possibility that desorption took place (discussed in the process section) because the carbon systems were being loaded with a higher concentration of PCBs initially. After a period of time, the influent concentration was less than the concentration loaded

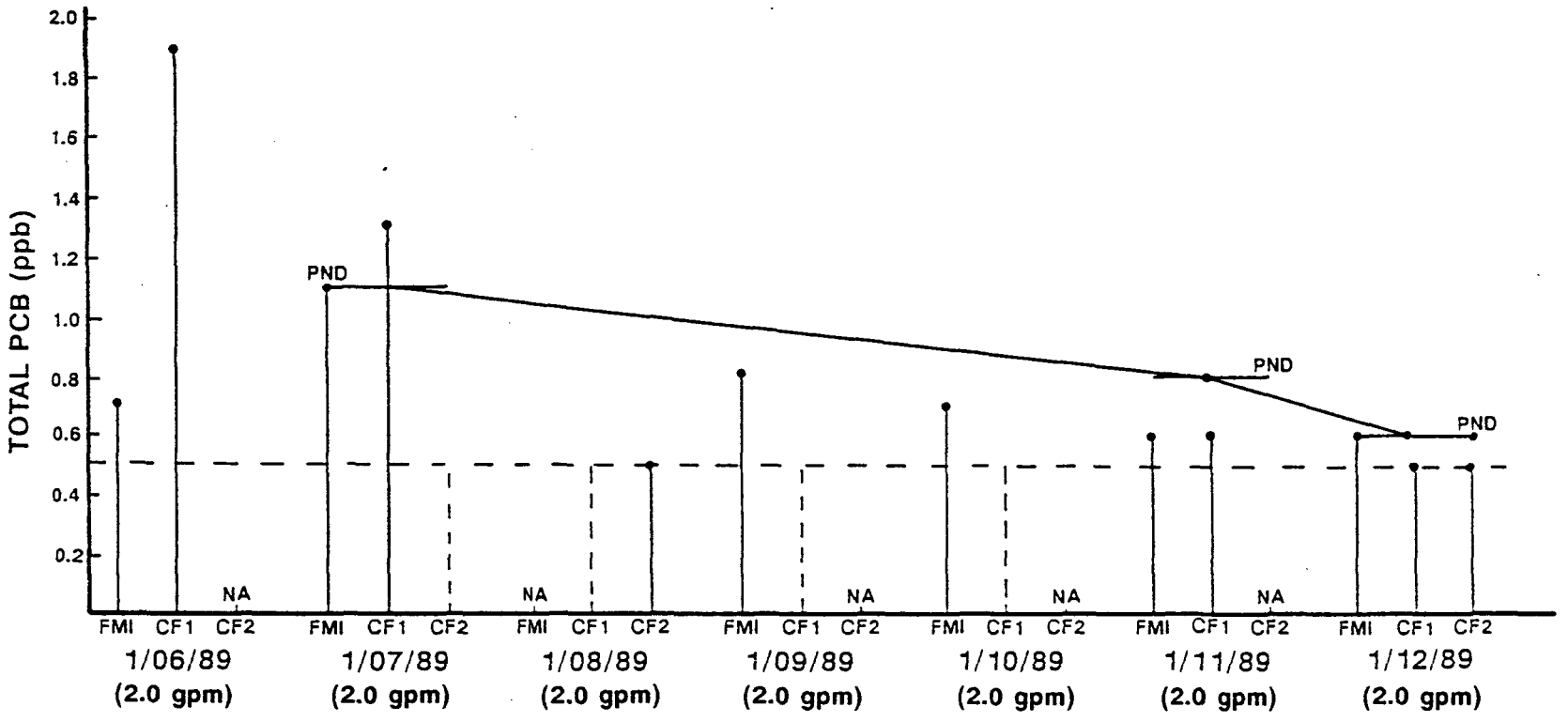

FIGURE 12

TOTAL PCB REMOVAL FOR THE SINGLE COLUMN ACTIVATED CARBON SYSTEM

in the carbon column, therefore either reaching an equilibrium state, or actually desorbing from the carbon into the water.

In addition to PCBs, suspended solids, and TOC analyses were conducted on samples collected during the activated carbon studies. The results of these analyses are graphically presented in Figures 13 and 14, respectively. The suspended solid concentrations in the Filter Module influent samples varied ranging from approximately 20 mg/l to 75 mg/l. The concentrations in the Filter Module effluent followed a similar pattern and were higher in some cases than were the concentrations in the influent. The suspended solids concentrations in the effluent from the carbon columns were generally lower than were the concentrations in the filter module influent and effluent. Initial higher concentrations in the carbon column effluent are probably due to the migration of carbon fines out of the column immediately after start up. Also, the inefficiency of the filtration system to totally remove the suspended solids, and coupled with the strong adsorption between the particulates and PCBs, allowed the particulate-bound PCBs to pass through both the filter and the carbon beds. These factors contributed to the inefficiency of the carbon systems in removing PCBs from the supernatant.

TOC concentrations in the Filter Module and carbon effluent ranged from 1 to 2 mg/l over the test period. A maximum TOC of approximately 3 mg/l was found in the influent to the filter module on 6 January. TOC concentrations appeared to decrease over time although the data is sketchy since a number of the samples collected after 7 January were not analyzed. Also, the data

FIGURE 13

SUSPENDED SOLIDS CONCENTRATIONS OBSERVED DURING ACTIVATED CARBON STUDY

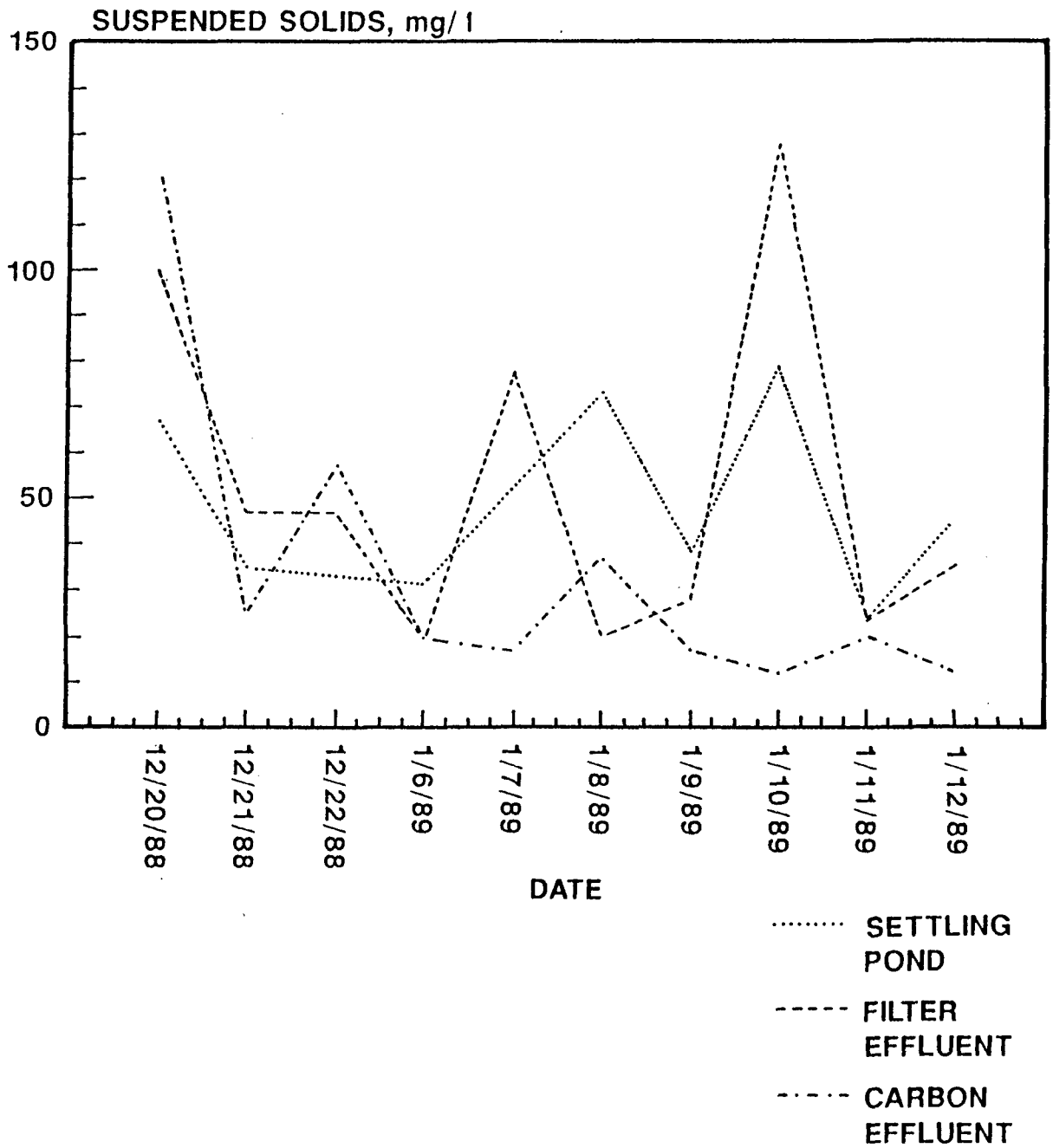

FIGURE 14

TOTAL ORGANIC CARBON CONCENTRATIONS FOUND DURING ACTIVATED CARBON STUDY

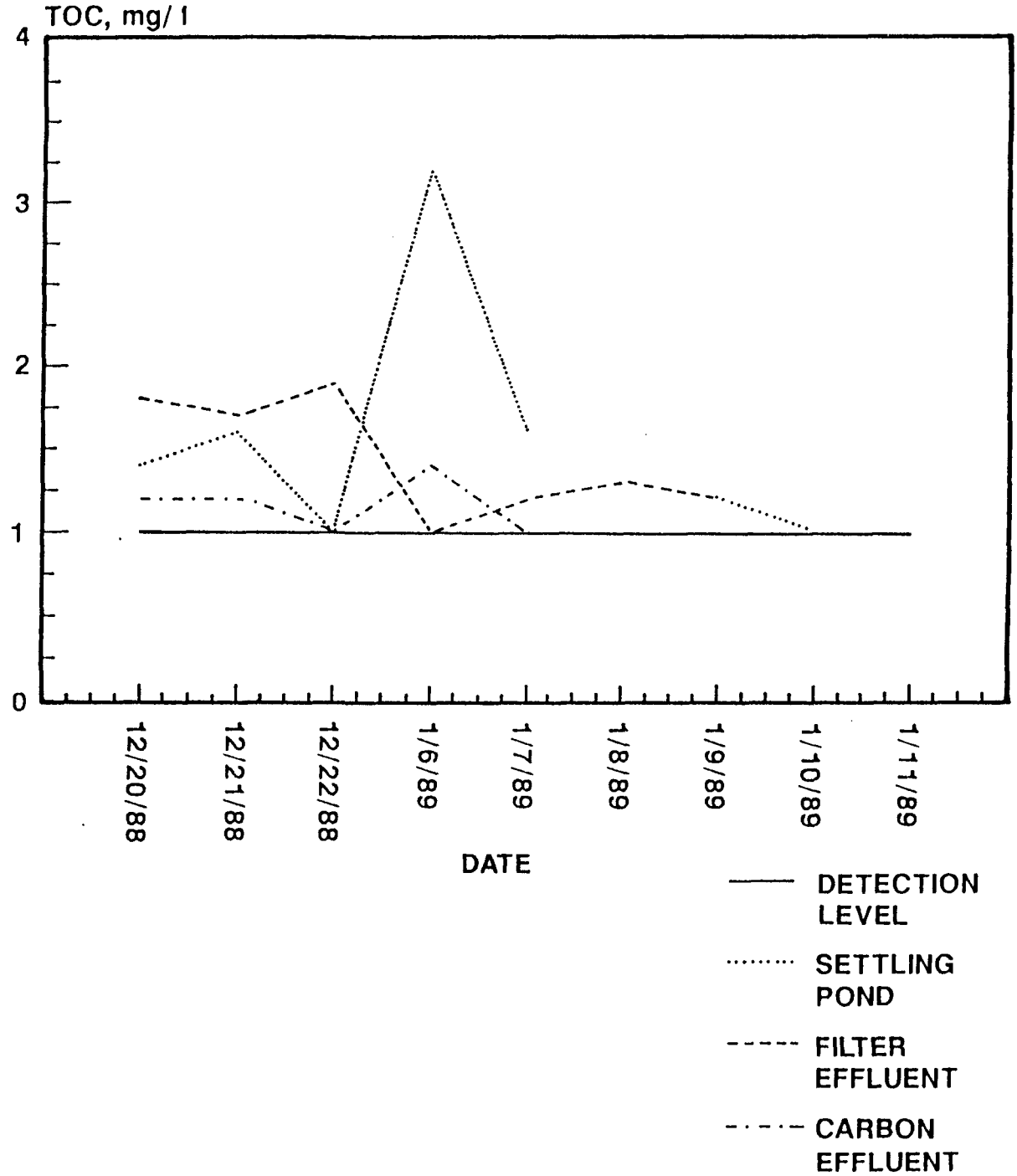

indicates that there was an insignificant change in the concentrations of heavy metals from influent concentration to that of effluent concentrations.

The effect of the cold water with respect to the adsorption rate had a significant effect on the performance of the carbon units. The test water was on the average ranging from 32°F to 35°F for the carbon tests. Since the isotherm data was obtained at room temperature (approximately 68°F), the rate of adsorption for the field test would be less. Since the adsorption rate was slower than anticipated, the carbon bed would have to have been deeper to compensate for the slower rate, thereby allowing the PCBs to penetrate the bed deeper before adsorption could be completed. Therefore, PCBs were exiting the columns since the adsorption rate was so slow, due to the cold water temperature.

In summary, it appears that the low influent PCB concentrations had a significant impact on the activated carbon treatment studies. The PCB concentrations were too low to conduct an equitable comparison of the two carbon systems. This coupled with the low water temperature, which decreased the effective adsorption rate of the carbon, deterred the system from achieving the estimated contaminant breakthrough, therefore, counteracting the assessment of loading rates. Also, the inefficient suspended solids removal by the filtration system was the greatest factor in the failure of the carbon systems to show removal of PCBs. As reported in the Case Study Section, total solid removal is of the utmost importance in achieving PCB removal by a carbon system from a supernatant.

UV/Hydrogen Peroxide System

The results of the total PCB analyses conducted on the samples collected during operation of the UV/hydrogen peroxide systems have been grouped in a variety of graphs in an attempt to illustrate the relative effects of varying the three operating parameters. It should be noted, however, that in most cases the influent total PCB concentration was just slightly above the detection level and thus variations in analytical results are probably much more significant than destruction efficiencies for these runs. Concentration differences are typically in the range of a few tenths of a microgram per liter (μg/l). The first four graphs, Figures 15 through 18, each present the influent and effluent concentrations at a particular flow rate using a 100 mg/l hydrogen peroxide dose rate and different UV dose rates corresponding to the number of lamps illuminated.

The results in Figure 15 are for runs conducted using a flow rate of 45 gpm. Two runs were made, one with three lamps illuminated and one with five lamps illuminated. The results indicate essentially no PCB destruction at a 45 gpm flow rate for either UV dose. At a flow rate of 30 gpm as shown in Figure 16, total PCB concentration reductions of approximately 0.2 ppb (to the detection level of 0.5 ppb) were achieved for three and five lamps illuminated.

The results in Figure 17 are for runs conducted at 15 gpm. PCB reductions to near the detection level were achieved with three and five lamps illuminated. The concentration reduction achieved

FIGURE 15

TOTAL PCB DESTRUCTION AT 45 gpm FLOW AND 100 mg/1 H202

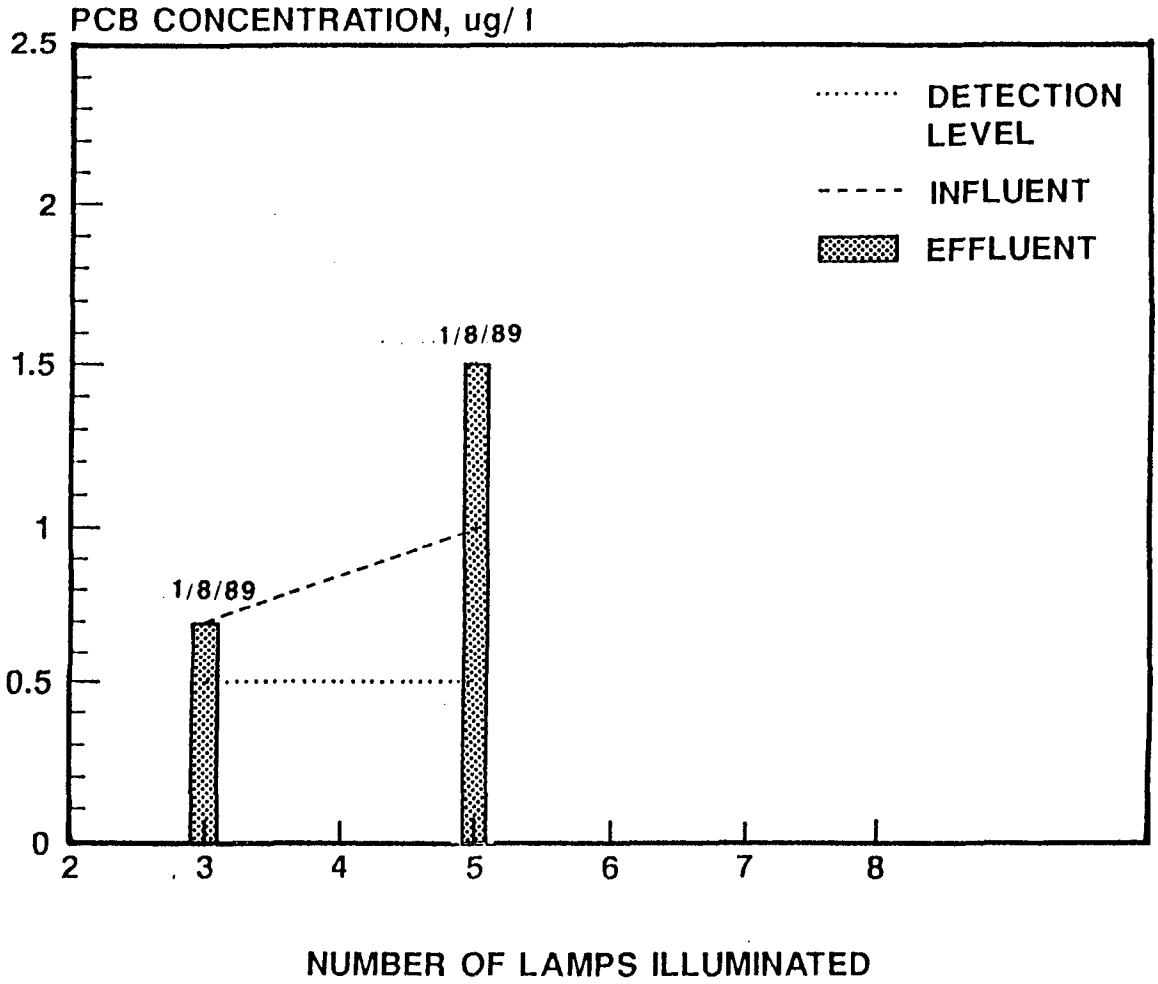

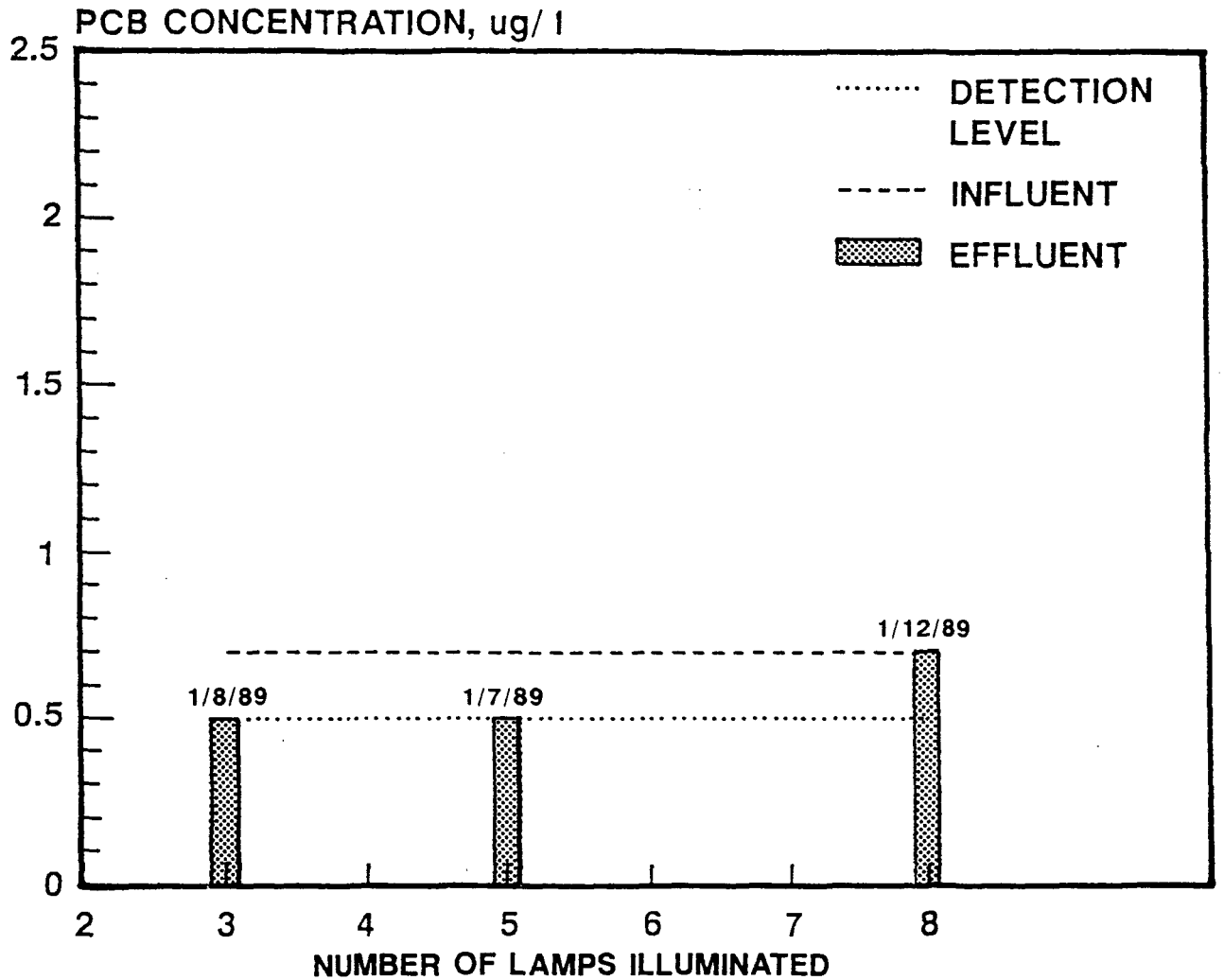

FIGURE 16

TOTAL PCB DESTRUCTION AT 30 gpm FLOW
AND 100 mg/1 H202

FIGURE 17

TOTAL PCB DESTRUCTION AT 15 gpm FLOW AND 100 mg/1 H202

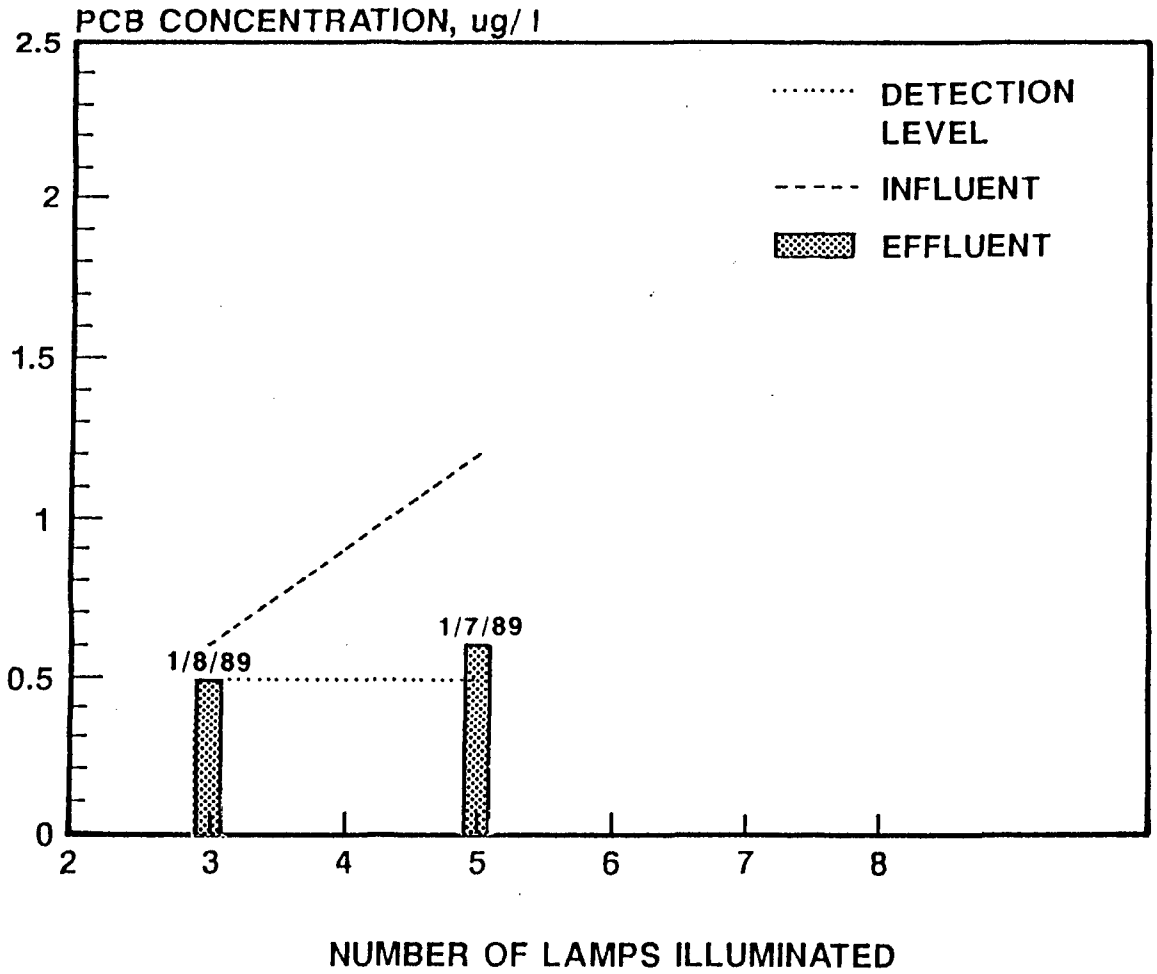

with five lamps illuminated is more significant since the influent concentration was much higher. Similar results are illustrated for runs made at a flow rate of 7.5 gpm as shown in Figure 18. The highest PCB destruction occurred with seven and eight lamps illuminated, however, the highest influent concentration occurred during the run made with eight lamps illuminated.

Figures 19 and 20 present the PCB results on samples from runs made using eight lamps illuminated at hydrogen peroxide doses of 50 and 100 mg/l, respectively, at a variety of flow rates. PCB destructions of from 0.2 to 0.3 ppb were found during all runs using a 50 mg/l dose of peroxide as shown in Figure 19. Residual concentrations were generally at or below the detection level.

The runs illustrated in Figure 20 were made on 19 December during the time when the PCB concentration in the secondary cell was decreasing rapidly. As indicated by the results, the destruction efficiency increased with decreasing flow rate (i.e. increasing retention time in the oxidation chamber). The data from the run made at 15 gpm indicates that the residual total PCB was approaching the detection level.

Figures 21 and 22 present the PCB results on samples from test runs made using eight lamps illuminated at flow rates of 30 gpm and 7.5 gpm, respectively, at two different doses of hydrogen peroxide. As illustrated in Figure 21, a total PCB reduction of 0.2 ppb was found for the run made using 50 mg/l of peroxide while no reduction was found for the run made using 100 mg/l. Both of the effluent concentrations were near the detection level.

FIGURE 18

TOTAL PCB DESTRUCTION AT 7.5 gpm FLOW AND 100 mg/1 H202

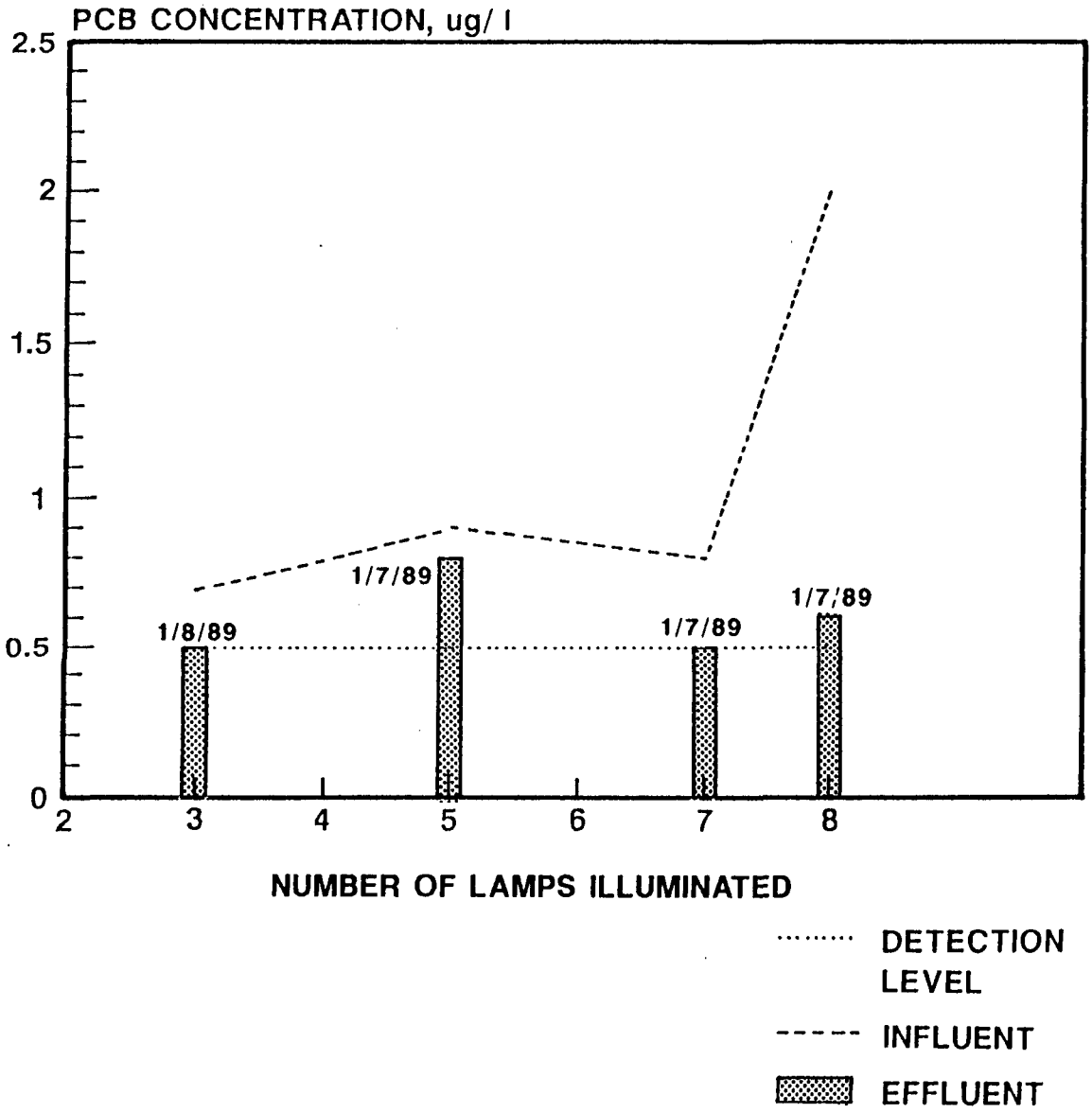

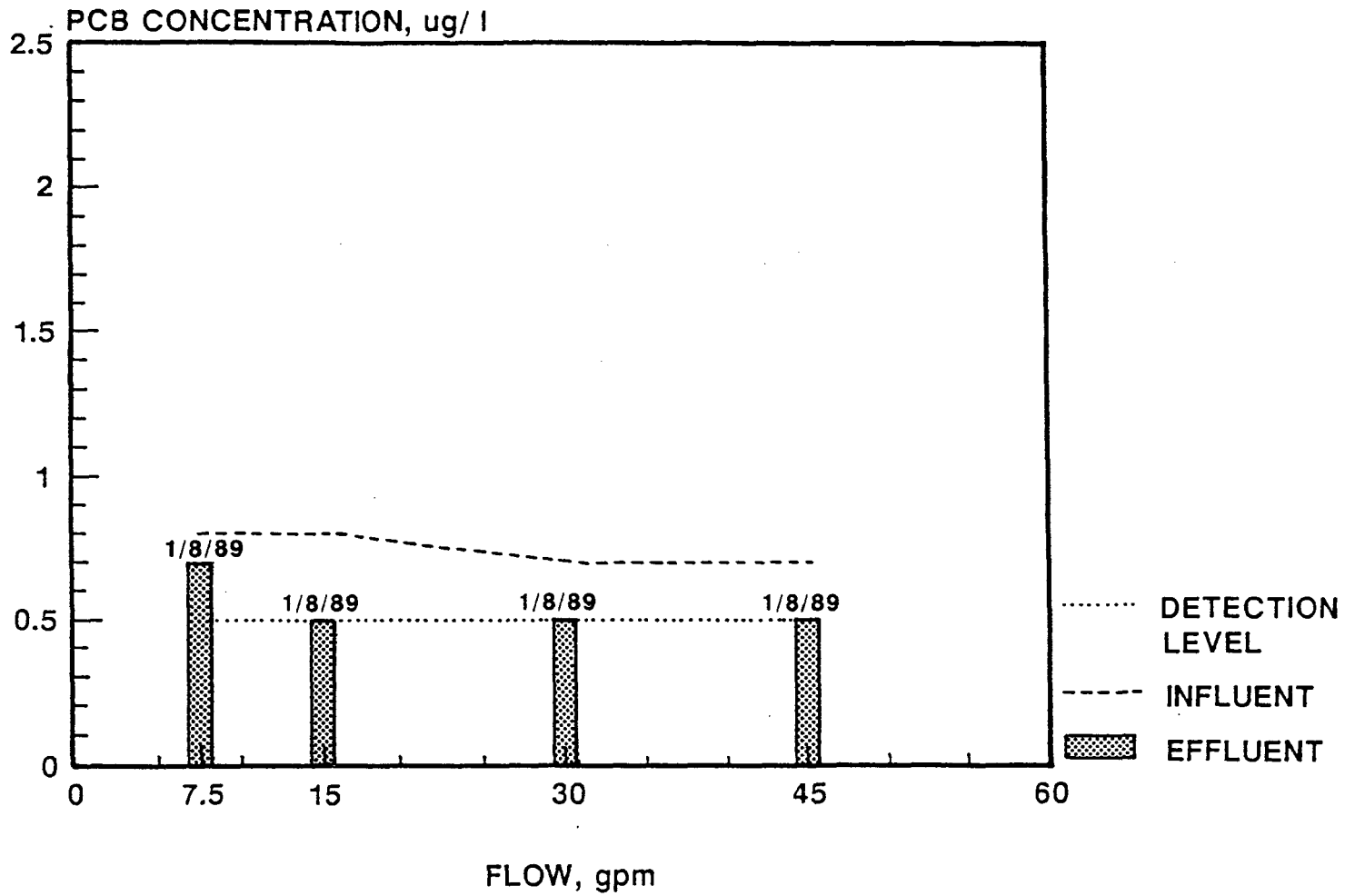

FIGURE 19

TOTAL PCB DESTRUCTION USING 8 LAMPS AND 50 mg/1 H202

FIGURE 20

TOTAL PCB DESTRUCTION USING 8 LAMPS AND 100 mg/1 H202

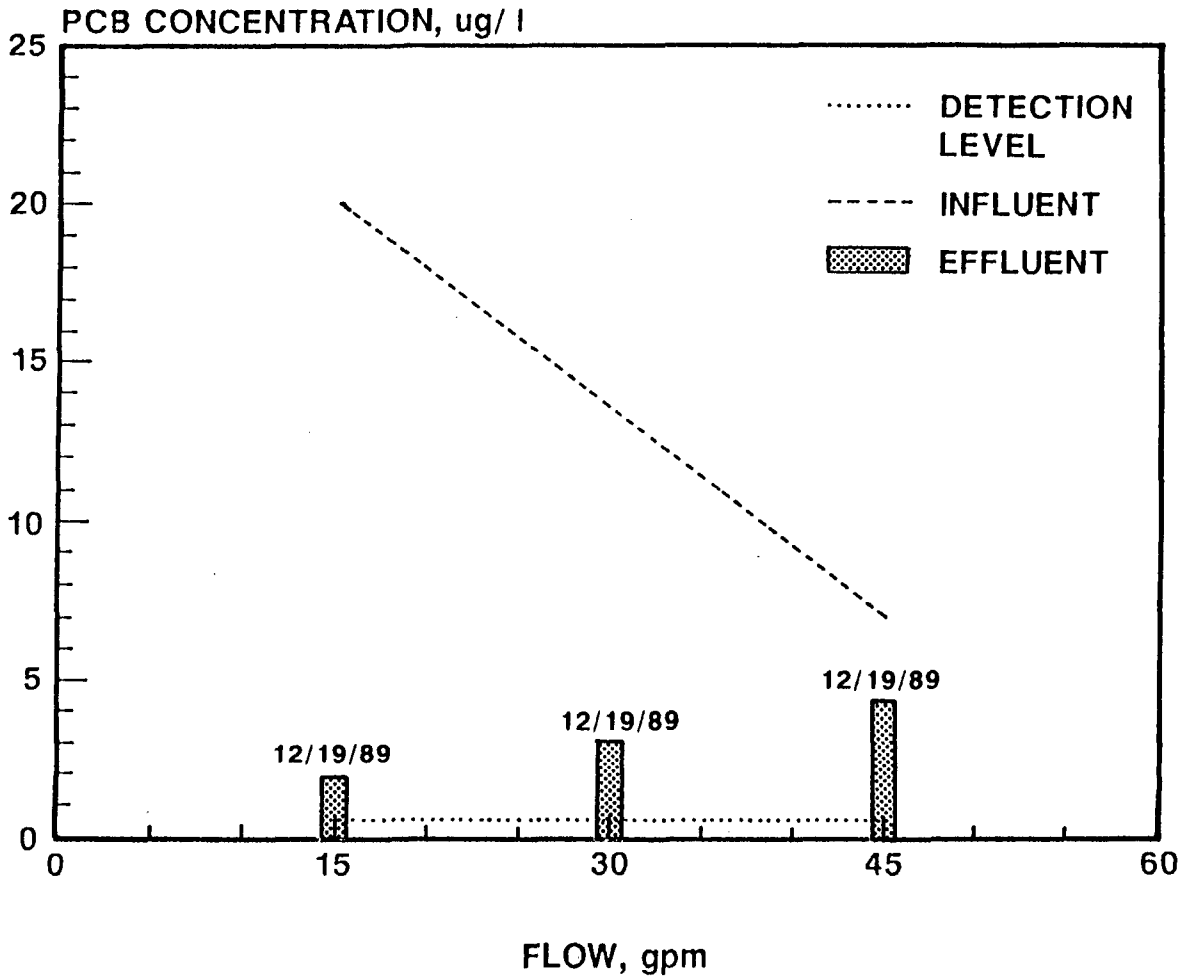

FIGURE 21

TOTAL PCB DESTRUCTION USING 8 LAMPS AT A 30 gpm FLOW

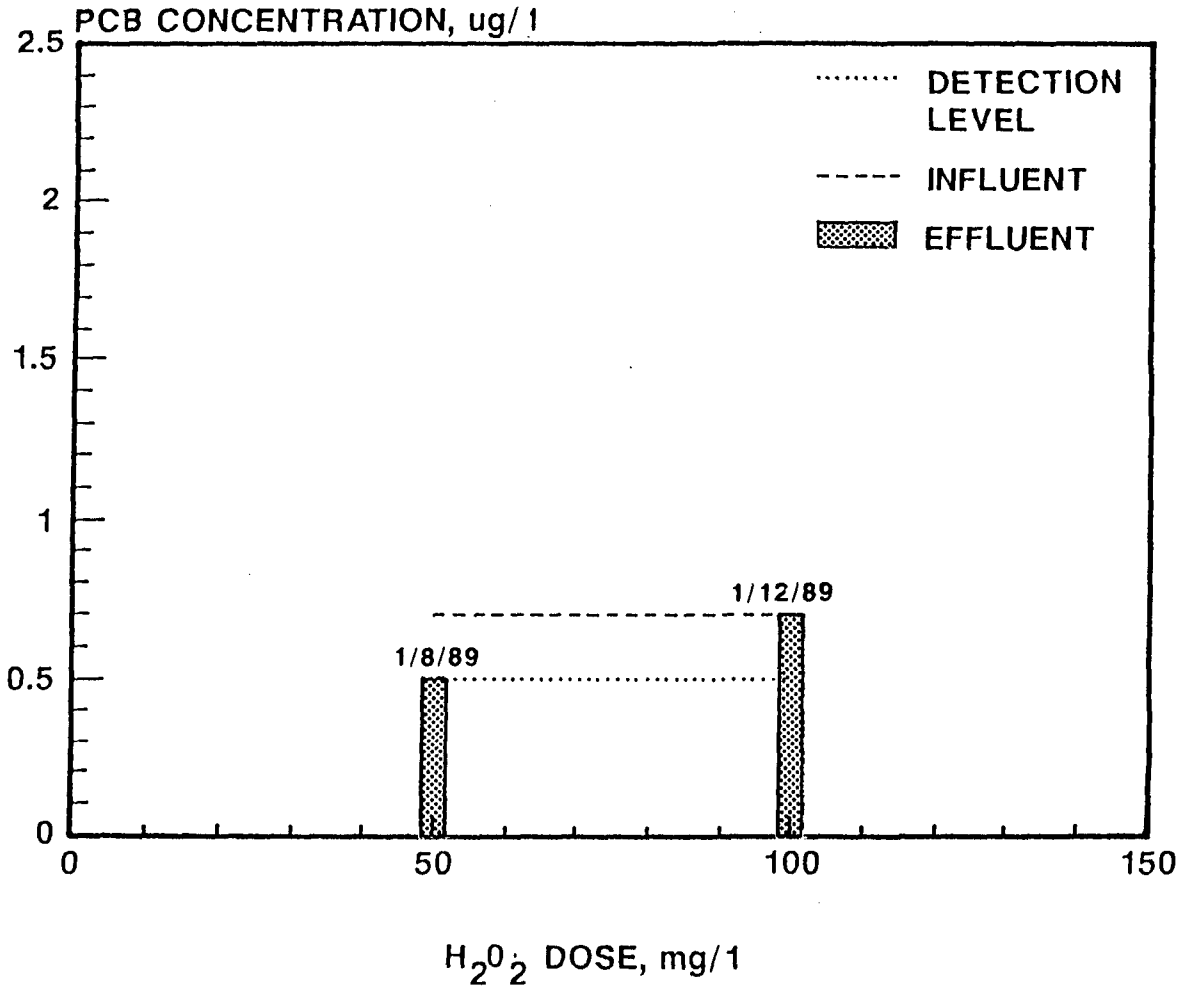

FIGURE 22

TOTAL PCB DESTRUCTION USING 8 LAMPS AT A 7.5 gpm FLOW

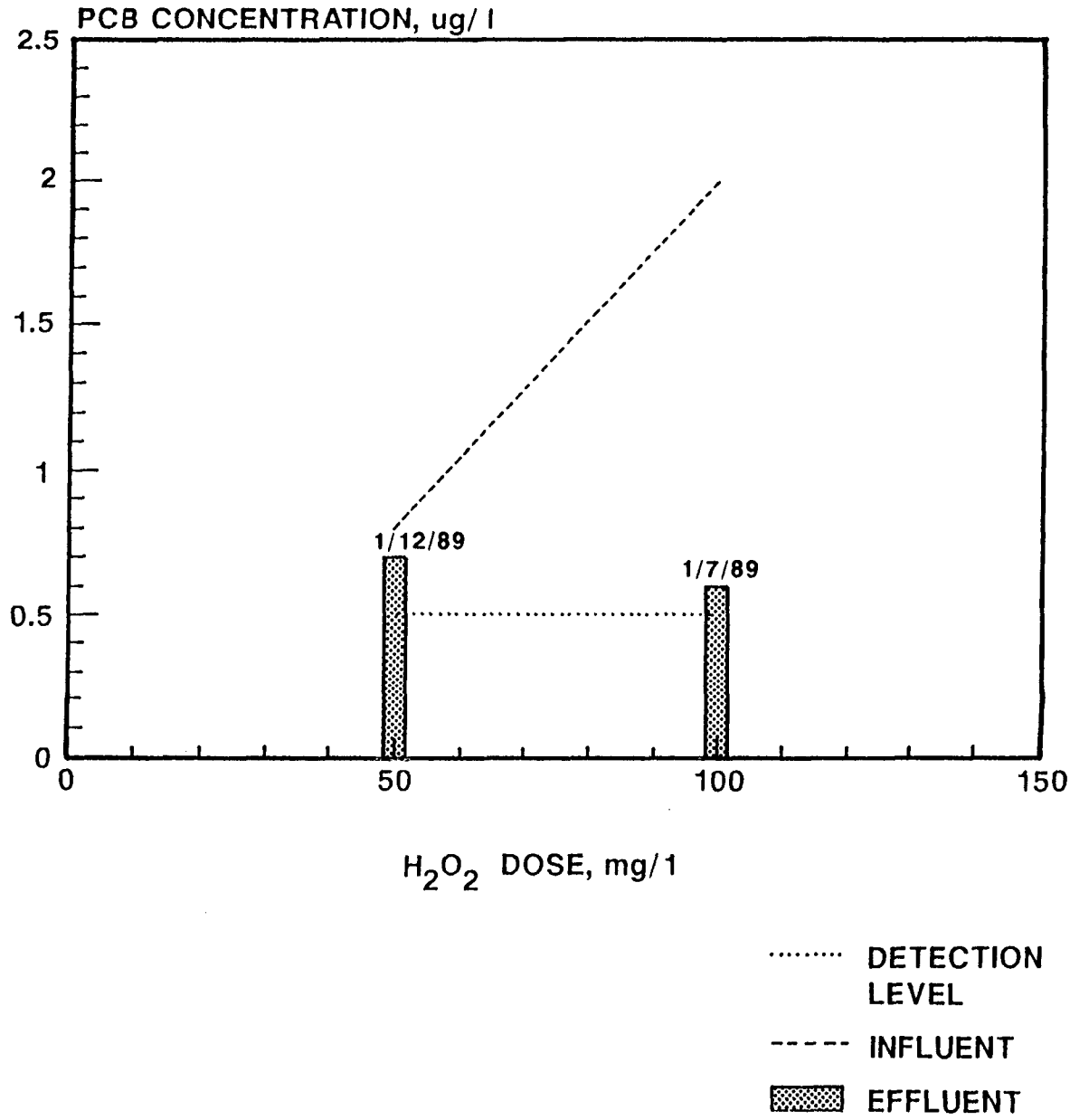

For the runs made at 7.5 gpm as shown in Figure 22, the total PCB destruction efficiency was much higher during the run where 100 mg/l of peroxide was used. This reduction is more significant since the influent concentration was much higher. The residual total PCB concentration appears to be approaching the detection level.

In summary, as with the carbon studies, it appears that the low influent PCB concentrations and the lack of adequate solid removal had a significant impact on the photochemical oxidation studies. The filtration unit that was deployed on the test site for both the photochemical oxidation equipment and the carbon adsorption unit was inadequate to handle the particulate loading coming from the Secondary Cell. This was due to two factors: 1) the inadequate depth and size of the bed, and; 2) the fact that the shallowness of the Secondary Cell required the suction line inlet to be positioned too close to the bottom of the cell, therefore entraining unnecessary quantities of particulate off the cell floor. This particular filter unit, although too small to handle the particulate loading, was in stock and being the only unit that was available for the study at the time. However, an overview of the proper design for the filtration system appears under the Equipment Proposals in the Full-Scale Conceptual Equipment Design section for the specified design flow rates. The low concentrations did not provide sufficient concentration ranges for observing the relative effects resulting from varying the operating parameters. The normal random fluctuations in concentrations, typically found associated with discrete samples collected from an

operation with continually changing conditions, swamped the variations usually found associated with the test run conditions. However, Figures 18 through 22 do indicate PCB destruction by the **perox-pure™** Process, and in some test results, an improved destruction was found where the influent PCB concentrations were higher. Therefore, this information will be further extrapolated in the Conceptual Design section that follows.

Conclusions

Although some data gathered from both the carbon systems and the photochemical system show some PCB removal, there is not enough information to substantiate any conclusions that would be viable for a full-scale design. In most of the tests, the influent PCB concentration was so low that the analytical detection limit equated to a major percentage of the total PCB concentration. This and the effect of the low water temperature on the carbon adsorption rate were unavoidable circumstances that unfortunately occurred.

The failure to remove the suspended solids from the supernatant compounded the problem with respect to the analytical process. Although total suspended solids were analyzed as being present in both the influent and effluent samples, it is not known what the actual mechanisms are that take place with respect to the solids being inside the sample bottle. Desorption could possibly be the major contributing factor to some of the erratic data. However, some of the analyzed effluent PCBs could have come off

the particles, inside the bottles, during the extraction phase of the analysis. Ultrafiltration (submicron filtration) prior to analysis could confirm which assumption is responsible. The pilot study did, however, substantiate the findings of the before mentioned case studies that total suspended solids removal is necessary in PCB treatment plants. Since the test results from both carbon systems were inconclusive with respect to actual adsorption rate information, the isotherm data that was developed by WES will be used to empirically design the full-scale carbon adsorption systems for the equipment proposals that follow.

On the other hand, the photochemical process did show relativley better PCB removal than the GAC system, in that an oxidation rate constant can be calculated, using part of the results. However, with the failure to remove all the suspended solids, there is no way to statistically substantiate this fact, since some of the effluent samples showed more PCBs than the influent. As with the GAC systems, the photochemical process plants will be empirically derived from both actual field data and laboratory test data produced by PSI. However, for comparison, the pilot study data that showed PCB destruction for photochemical oxidation will be illustrated in the Combination Treatment Plant section.

PART V. FULL-SCALE CONCEPTUAL EQUIPMENT DESIGN

Discussion

The full-scale treatment operation of the New Bedford Harbor will be similar to that of the pilot study, except more emphasis will be placed on suspended solids removal in a pretreatment system. The process plant will consist of the pretreatment plant where supernatant from the secondary cell will be clarified by flocculation in order to coagulate as much of the suspended solids as possible to enhance their removal. As noted earlier, the PCBs adhere to the suspended solids, which cause great difficulty to achieve complete PCB removal. After clarification, the water will be completely filtered in the filtration plant before being processed. The filtration system will be backwashed with processed water, contained in a holding tank, back to the primary cell. After the supernatant is processed, it will be returned to the Acushnet River.

These separate process "plants" may or may not be housed in the same building. However, considerations need to be made for weather conditions, which will impose freezing conditions in the winter or heavy rains in the spring and summer. The equipment will require being placed on a concrete slab for foundation, and proper electrical service, since the operation of such a treatment facility will range from a minimum of nine months to a maximum of approximately five years.

In this section of the report three process pathways will be analyzed; one, only the use of granular activated carbon, two, only photochemical oxidation, and three, photochemical oxidation as the primary process with the GAC as a secondary process, being used as a polishing process before discharging to the river. An economic analysis of each pathway will be included along with a discussion of the logistics of each process system. An evaluatory discussion will follow in the conclusion of this section.

Design Criteria

The process of cleaning up the New Bedford Harbor Superfund Site is finitely limited, therefore is classified as temporary. All facilities and equipment should be purchased or constructed with this thought in mind. After clean-up is completed the process equipment will be removed from the site, either to a storage facility or to another site. The CDF will be closed and capped, leaving only a concrete slab and a building to be disassembled. The equipment proposed for this project will be modular in construction; in that the complete system can be deployed or removed with minimum effort. The building(s) that house the equipment should be constructed in order to accomodate the down loading and loading of the process equipment.

The design flow rate for the treatment system will depend on the production rate and the daily operating time of the two proposed dredges, which, from the data of the pilot study, can produce 2100 gpm for four to eight hours per day. Also, the design and specifications of the equipment depend on the specific CDF

effluent concentrations of PCBs. Therefore, the equipment design and cost estimates will reflect the requirements to treat approximately 1,000,000 gallons of supernatant with a concentration of 36 $\mu g/l$ of dissolved A1254 per twenty four hours. Although the dredges will not likely operate everyday at this rate, however, the 1,000,000 gallon per day production level will be used, inducing a factor of safety for production levels in order to be able to recover process losses when part of the treatment system is down for general maintenance or repairs. In order to meet this requirement, the treatment plant has to process supernatant either 700 gpm or 500 gpm, for twenty four hours, seven days per week while dredging operations run either seven days or five days per week, respectively. For the purpose of this report the 700 gpm flow will be used as the design flow rate.

Equipment Proposals

Introduction

Flocculation and clarification are beyond the scope of this report, however, they do play a critical part in the pretreatment process in order to rid the supernatant of suspended solids. Also, since the design of the filter units is directly related to the pretreatment of the water to be filtered, an overview of filter unit design will be discussed, therefore siting the filtration requirements necessary for the treatment process and leaving the component intergration to be completed after clarification is finalized.

Each proposed pathway will be labeled as a separate case, consecutively throughout the equipment proposals. Therefore, each proposal can be easily correlated to the Equipment Design and the Economic Analysis sections, respectively.

Filtration

Since the equipment is to be modular, in that it is easily loaded or downloaded from a truck bed, the dimensions of such equipment is limited. This dictates that the influent flow to the treatment process plant needs to be divided into equal streams to make up the necessary 700 gpm flow requirement. This principle also allows for either maintenance and service or filter backwashing to take place, without totally disabling the plant as would happen with only one filter.

The filtration operation essentially involves two phases: filtration and backwash. The end of the filtration phase is reached when suspended solids in the filter effluent start to increase beyond an acceptable level, (breakthrough) or when the limiting head loss occurs across the filter bed.

The filter requires backwashing in order to remove the solids that were trapped in the bed. In backwashing, a sufficient flow of wash water is applied until the granular filtering medium is fluidized (expanded), then the material that has accumulated in the bed is washed away. Backwash flow should range from 15 gal/min - ft^2 to 20 gal/min -ft^2 in order to have complete bed expansion. The water used in backwashing will be contained in a holding tank that is supplied by processed water. The backwashed solids will

then be deposited into the primary cell of the CDF.

There are five major factors that govern the removal of suspended solids from a supernatant with a granular filter; grain size of the medium, rate of filtraton, the influent particle size, the floc strength and bed capacity (amount of material that is held in the medium before breakthrough). Since the total removal of the solids is of the utmost importance for PCB contaminated waste streams, any variation in the above mentioned factors will change the filtration characteristics of a particular filter unit.

The filters proposed for this project are to be down-flow, dual-medium filters. The bed should be three to four feet deep consisting of anthracite in the top layer of approximately sixteen to twenty inches deep and silca sand in the bottom layer, twenty to thirty inches deep. By using the dual-medium arrangement, the solids will have a deeper effective penetration into the bed, since actually only the top several inches of each medium become impregnated with solids when using granular filters. The surface area is respective to the filtration rate ranging from two to twelve g/min - ft^2 (gallons per minute per square foot). Therefore the higher the flow rate, the larger the diameter is required. The filter dimensions can only be determined after the number of process lines is determined.

The grain size of the sand will depend on the effluent characteristics of supernatant from the clarification plant. Further design studies can establish the necessity of dual filter bed in series. By having a larger grain size in the first bed, and a smaller size in the second bed, a much greater loading can be

accomplished, therefore longer filter runs would result. This would, in turn, allow backwashing to be less frequent. Filter units will be proposed later in this section, respective to each process pathway.

Activated Carbon Treatment Plant

CASE I: The operating conditions, as mentioned above, for Case I are 700 gpm, twenty four hours per day with a PCB (A 1254) concentration of 36 μg/l. According to previous studies, the Empty Bed Contact Time (EBCT) required for complete adsorption was found to be at least thirty minutes, with the actual field equipment consisting of a dual adsorption system and a EBCT of approximately forty minutes (Lafornara, 1978). As discussed in the Results section, the activated carbon system for the pilot study, little or no PCB removal was observed, leading to the fact that not much information could be gathered from the test data. Therefore the conceptual design for the activated carbon systems are based on the laboratory results from the isotherm tests. Using the WES Isotherm Study as a reference (Appendix A) the carbon exhaustion rate can be calculated. Table 4 illustrates the calculated results.

Table 4

Case I Carbon Exhaustion Rate

Daily Flow Rate	3.80×10^6 l/day
Mass of PCB Removed	1.34×10^8 μg/day
PCB Adsorbed per Unit Weight of Carbon	252 $\frac{\mu g \text{ PCB}}{g \text{ carbon}}$
Rate of Carbon Exhausted	1100 lbs/day

Due to the inefficiencies found in the loading of fixed carbon beds, caused by either uneven compaction of the bed, sidewall boundary conditions, or channeling, the loading rate found in the laboratory jar test, using powdered carbon, should be modified to induce a factor of safety. As noted by the carbon industry, actual loading occurs through the bed as an uneven wave front, not as a perfect parallel-piped slug. This action results in a breakthrough without totally exhausting the entire carbon bed. As a "rule of thumb" the actual loading ratio is to be one-half the value found in the isotherm jar test. For this particular case the 252 $\frac{\mu g \text{ PCB}}{g \text{ carbon}}$ has been halved to 126 $\frac{\mu g/\text{PCB}}{g \text{ carbon}}$ in order to induce a factor of safety of 2.0. However, in actual field applications, the latter loading ratio should prove to be the better choice instead of the former. Table 4-A illustrates the design information for the fixed bed carbon units.

Table 4-A

Modified Case I Carbon Exhaustion Rate

Daily flow rate	3.8×10^6 l/day
Mass of PCB Removed	1.34×10^8 μg/day
PCB adsorbed per unit weight of carbon	126 $\frac{\mu g \text{ PCB}}{g \text{ carbon}}$
Rate of carbon exhausted	2200 lbs/day

From manufacturers' information, skid mounted fixed bed carbon adsorption systems are available consisting of two 20,000 lb. capacity vessels plumbed in series. These packaged skids are ready for operation when delivered to the site except for the carbon, which will require loading at the site. The vessels are ten feet in diameter and eight feet tall. This arrangement of dual adsorbers is preferred by the carbon industry in that one vessel can be totally exhausted while the second has not reached breakthrough. The spent vessel is changed out with new carbon and the flow is reversed in order for the new carbon to be effluent to the carbon adsorber already in use.

Using an average of forty minute total EBCT (twenty minutes per adsorber), four process lines are proposed in order to meet the above mentioned standards. Although the flow rate calculates to be 214 gpm for each line, with four lines, the flow rate can average from 175 gpm to 200 gpm, allowing longer time between filter backwash and carbon replacement. The extra flow capacity is to be used as recovery flow when one line is down for either filter backwash or carbon service. With three lines operating (the other one down for service) at 233 gpm for the service period, the average EBCT would be approximately thirty five minutes, within the range found necessary for PCB adsorption. On the other hand, if there were only three process lines, two lines would require a flow rate of approximately 350 gpm to meet the daily flow requirements, therefore equating to only twenty five minutes EBCT.

The proposed carbon adsorption process system will consist of four process lines of dual adsorbers and a filtration unit

preceding each carbon unit. Ample processed water will be contained in a holding tank for filter backwash and carbon service, with the holding tank being replenished from the other processing lines still in operation. Figure 23 illustrates the carbon process plant.

Referencing Figure 23, water is pumped from the secondary cell of the CDF to the flocculation/clarification plant, where most of the solids are removed. The water leaves the clarification plant and is split into four equal flows by an influent manifold. Each line is filtered through a multi-layered sand filter in order to totally rid the supernatant of any suspended solids before passing through the carbon adsorption system. In normal operation the effluent from the adsorbers flows into the effluent manifold where it is then piped to the Acushnet River as clean water.

When one line is down for service, the filler is to be backwashed to the primary cell using water from the backwash tank. The exhausted carbon will also be flushed to the primary cell, with the water being supplied by the backwash tank. Furthermore, water from the backwash tank will be used to slurry new carbon into the empty adsorber. The process effluent plumbing is arranged to accommodate the above mentioned procedures.

Table 5 illustrates the initial capital costs for Case I equipment readied for operation:

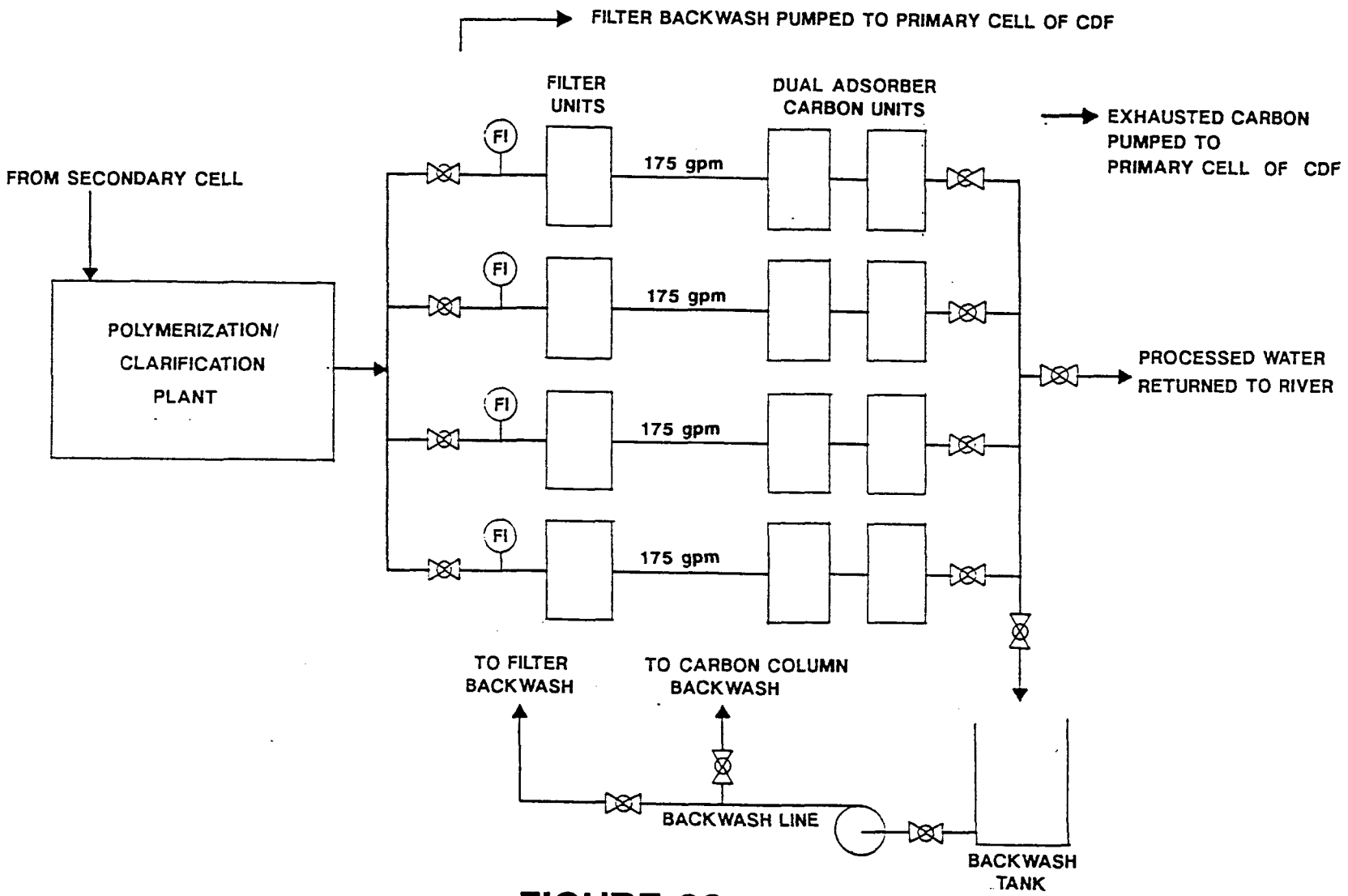

FIGURE 23

CASE I: ACTIVATED CARBON TREATMENT PLANT

Table 5

Case 1 - Initial Capital Costs

Quantity	Description	Unit Price	Total Cost
4	Superior quality (total solid removal) multi-layered sand filter rated at 385 gpm	$ 17,658.00	$ 70,632.00
4	Dual adsorber 40,000 lb. total capacity carbon units ready for operation	170,000.00	680,000.00
160,000 lbs.	Virgin carbon delivered and loaded into adsorbers	1.20/pound	192,000.00
		Total	$942,632.00

Carbon service from nine month to a five year period will be discussed in the Economic Analysis section.

Photochemical Oxidation Treatment Plant

The operating parameters for the photochemical oxidation plant are the same as for the carbon plant; 700 gpm for twenty four hours per day, (1,000,000 gpd) with a dissolved PCB (A1254) concentration of 36 μg/l. The design destruction lower limit is 0.5 μg/l concentration. However, since actual test data from the New Bedford pilot test were nowhere near the proposed design requirement set by WES, the proposals that follow are predictions, therefore would require bench-scale testing to verify the information valid prior to full-scale installation. Three systems are reviewed in this section: one is based from an interpolation of raw data from the pilot study, and two and three are based from the evaluation of oxidation data and other aromatics that have been analyzed in the PSI laboratory.

In reviewing Figure 16 through Figure 22, it can be observed that both the influent and effluent concentrations were relatively low. However, Figure 20 offers the best information for proposed design, since the influent PCB concentrations were higher in December 1988 than in January 1989. Therefore, Figure 20 will be used as the basis for the following equipment proposal.

In order to evaluate all the data to a common denominator, a first order differential equation was used to determine respective oxidation rate constants. This equation has been used extensively in evaluating chemical reactions by chemists, which is identified as a special case of the Law of Mass Action (Spiegel, 1967) (See Appendix D for equation development). Also, since Appendices F and G illustrate rather high concentrations of suspended solids even after filtration, there is no reason to assume that suspended solids did not have a major role in the analysis of PCBs in the UV/Oxidation phase of the pilot study. The suspended solids greatly reduce the relative efficiency of the photochemical process, since the PCBs are adsorbed into the particles, therefore harboring them from any means of destruction. After the sample bottle is capped, PCBs may desorb into the supernatant, causing a higher concentration value when analyzed. Given that all other operation parameters are held constant, only the rate constant of the process would change, resulting in a lower value than if the effluent water was totally free of particulate adsorbed PCBs.

From the pilot study, rate constants of oxidation ranged from 0.13 to 0.23, producing an average of 0.20. This rate constant tends to be low when compared to other aromatic compound

destruction results that have been collected from actual field operations.

Considering the above mentioned problems with suspended solids, oxidation rate constants derived from actual field applications, treating single ring aromatic compounds, will be evaluated where the tested supernatant was filtered free of suspended solids. Benzene, chlorobenzene and ethylbenzene are examples of such compounds that have been tested in the field, producing rate constants ranging from 0.4 to 2.0, resulting in a conservative mean of 1.0 (see Appendix E). The ranging rate constants are due to the fact there are dissolved inorganics also present in the supernatant which tend to cause the oxidation rates to fluctuate.

However, naphthalene, a dimolecular ring aromatic compound, similar to PCB, has been tested extensively in the laboratory, resulting in rate constants ranging from 4.0 to 6.0. For this comparison, a rate constant average of 5.0 will be used evaluating the photochemical equipment required for PCB destruction (see Appendix E).

The photochemical process will be examined using rate constants of 1.0 and 5.0. The rate constant of 0.20, per pilot study data, produces unreasonable equipment requirements that are beyond economic consideration using the photochemical process. Following the photochemical process examination, combination treatment plants will be examined using all three rate constants, when the photochemical process is succeeded by a GAC unit. From

this, it will become evident of how unreasonable the photochemical process is with respect to a rate constant of 0.20.

As with the carbon treatment plant, each photochemical oxidation line will be preceded by both a clarification plant and filtration unit for total suspended solids removal. The total flow rate will be divided equally to allow for the necessary retention time required for complete oxidation. The flow rates are sufficiently high enough to negate any need for effluent cooling, since there is only a 5°F rise in temperature per minute of retention time. For each of the following cases, the rate constant will be used to determine the process retention time. However, for the combination treatment plants, the flow rates are divided equally to allow at least thirty minutes of EBCT for the back-up carbon systems.

CASE II: For Case II the rate constant of 1.00 equates to a 4.5 minute retention time for oxidation at a 700 gpm flow rate, with four CW 675/810 **perox-pure™** treatment units required. There is, however, a built-in safety factor of 1.25 (see Figure 24). Table 6 illustrates the initial capital costs for the CW 675/810 **perox-pure™** equipment, respectively, per pilot study data.

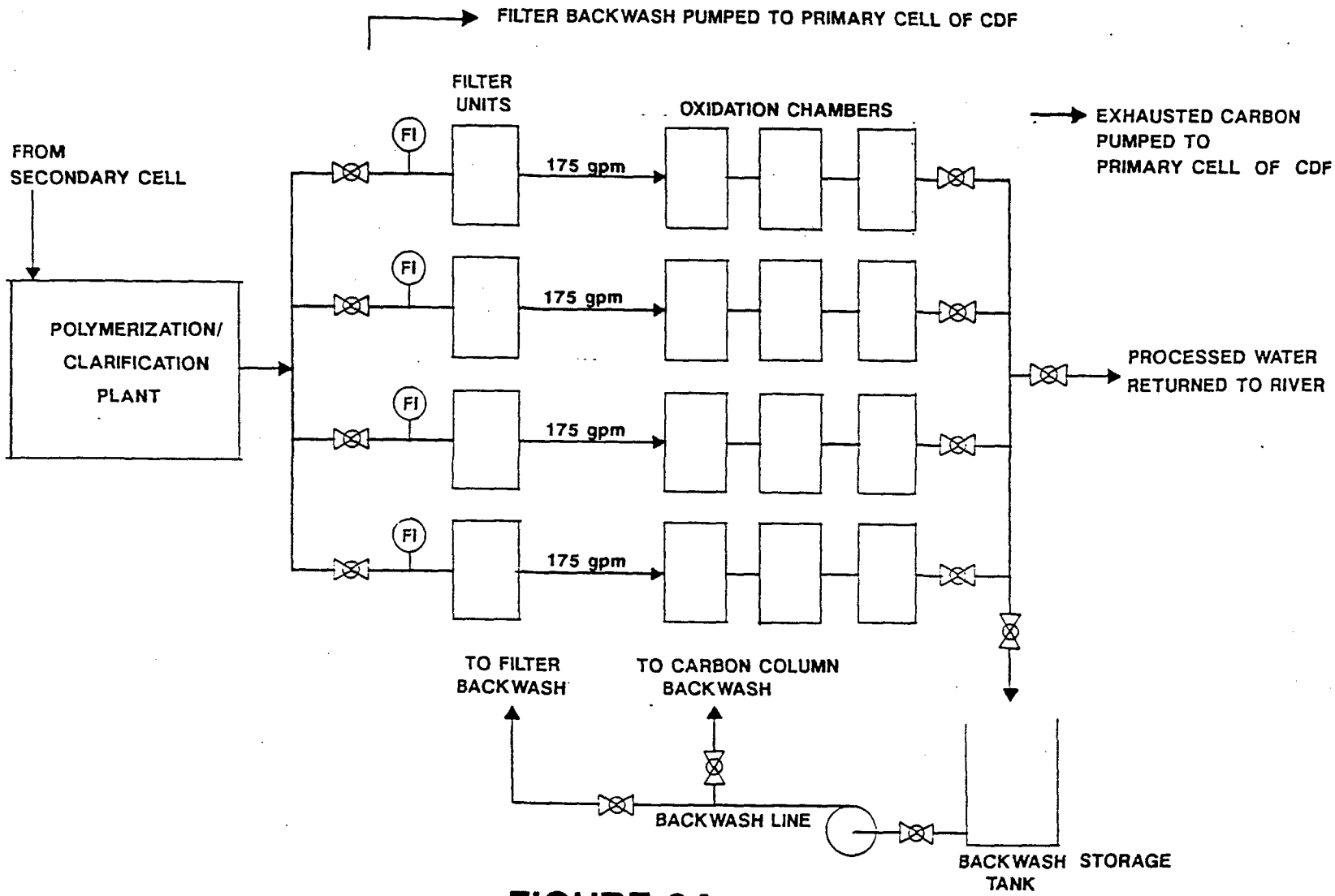

FIGURE 24

CASE II: CW 675/810 **perox-pure**™ PROCESS FLOW DIAGRAM

Table 6

Case II Initial Capital Costs

Quantity	Description	Unit price	Total Cost
4	Superior quality (total suspended solids removal) multi-layered sand filter rated at 385 gpm	$ 17,658.00	$ 70,632.00
4	CW 675/810 **perox-pure™** treatment units with all necessary associated equipment	679,500.00	$2,718,000.00
		Total	$2,788,632.00

Hydrogen peroxide, electrical power, and equipment maintenance/ service contract will be evaluated in the Economic Analysis section, since all these items require evaluation for an operational period ranging from nine months to five years.

CASE III: By using a rate constant of 5.00 as compared to naphthalene, the Case III treatment plant is much smaller. There is not only a substantial capital cost reduction but also a reduction in operating expenses. However, this is predicated on the fact that the supernatant is totally free of suspended solids.

The 5.00 rate constant equates into a 0.86 minute retention time required for complete oxidation from 36 μg/l of PCBs to 0.5 μg/l of PCBs. By using two CW 360 **perox-pure™** treatment units, a 350 gpm flow rate would result in approximately a 1.4 minute retention time. Considering a factor of safety of 1.25, there is an installed redundancy of 21%. However, the kilowatt-hour cost is based on only the amount of power that is needed for complete

oxidation. The idle lamps are in reserve, to be operated either during the service period or when one of the primary lamps burns out. When one line is being serviced, the flow rate of the other line can be increased to 420 gpm without falling below the prescribed 0.86 minute retention time, provided the unit is brought up to full power. Over an eight hour service period, there would be a net loss of 134,400 gallons of production. However, by operating both units at approximately 420 gpm for sixteen hours, the loss in production can be made up. The process line is illustrated in Figure 25.

Table 7 lists the initial capital costs for the CW 360 treatment plant.

Table 7

Case III Initial Capital Costs

Quantity	Description	Unit Price	Total Cost
2	Superior quality (total suspended solids removal) multi-layered sand filter rated at 503 gpm	$ 30,105.00	$ 60,210.00
2	CW 360 **perox-pure™** water treatment unit with all necessary associated equipment	330,700.00	661,400.00
		Total	$1,322,800.00

As mentioned above, hydrogen peroxide, electrical power, and equipment maintenance/service contract will be evaluated in the Economic Analysis section.

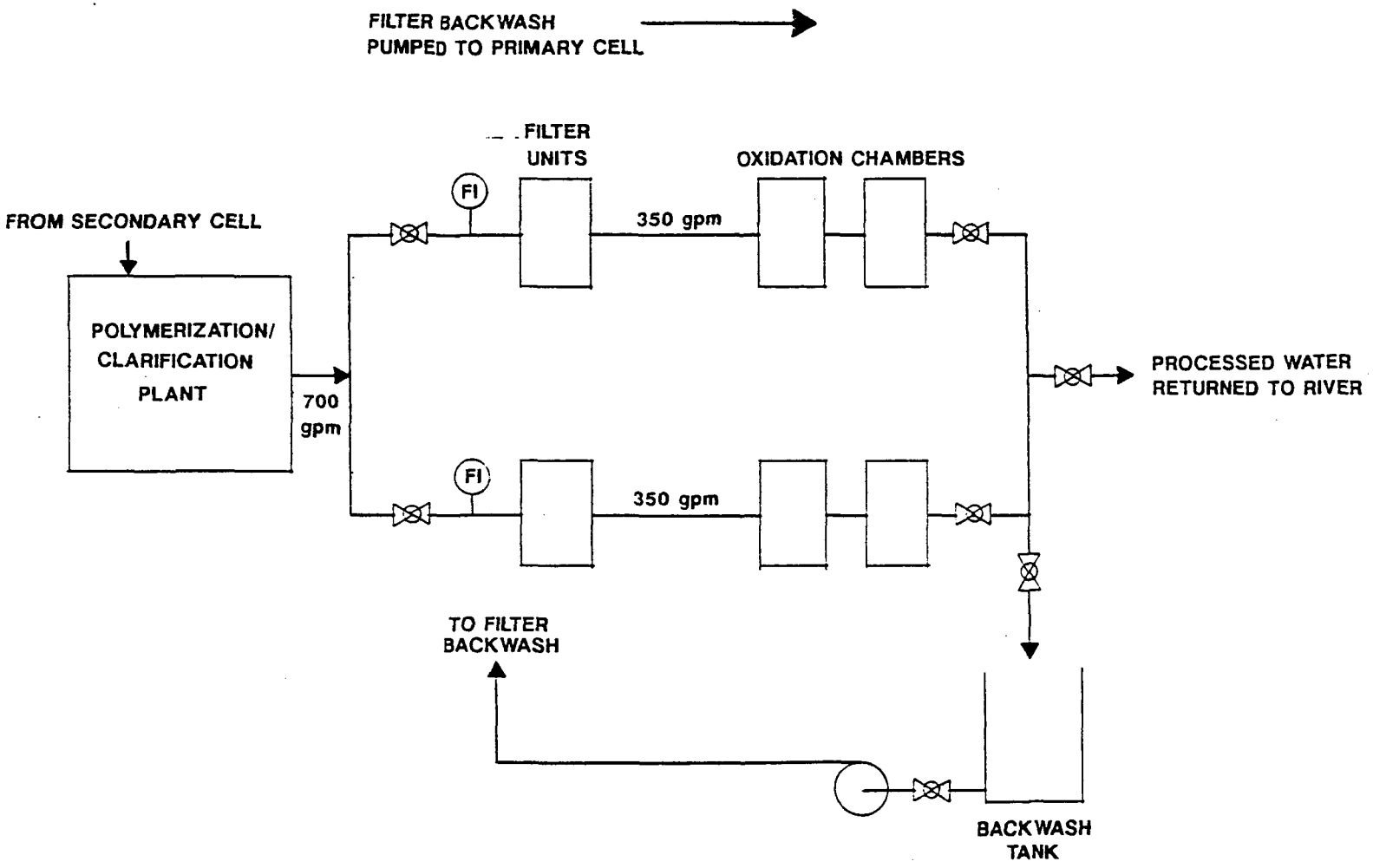

FIGURE 25

CASE III: CW-360 perox-pure™ PROCESS FLOW DIAGRAM

CASE IV: The Case IV pathway is also based on the 5.00 reaction constant, however, the process stream is divided into three equal flows of 234 gpm each. Each line incorporates a CW 225 **perox-pure™** treatment unit, with a retention time of 0.86 minutes reducing the initial PCB concentration from 36 ppb to the design level of 0.5 ppb. Having incorporated a factor of safety of 1.25, there is still an installed redundancy of approximately 14%.

As in Case III, the electrical power cost is based only on the amount of UV wattage needed to complete the oxidation, while operating at standard conditions. By operating the other two lines at 325 gpm and full power, there would be a loss of 43,680 gallons of production over an eight hour service period. By then operating all three lines at 325 gpm for approximately 3.0 hours at full power, the loss can be overcome. Figure 26 illustrates the process plant.

Table 8 lists the initial capital costs for the CW 225 **perox-pure™** treatment plant, per the rate constant of 5.00.

Table 8

Case IV Initial Capital Costs

Quantity	Description	Unit Price	Total Cost
3	Superior quality (total suspended solids removal) multi-layered sand filter rated at 385 gpm	$ 17,658.00	$ 52,974.00
3	CW 225 **perox-pure™** water treatment units with associated equipment	210,600.00	631,800.00
		Total	$684,774.00

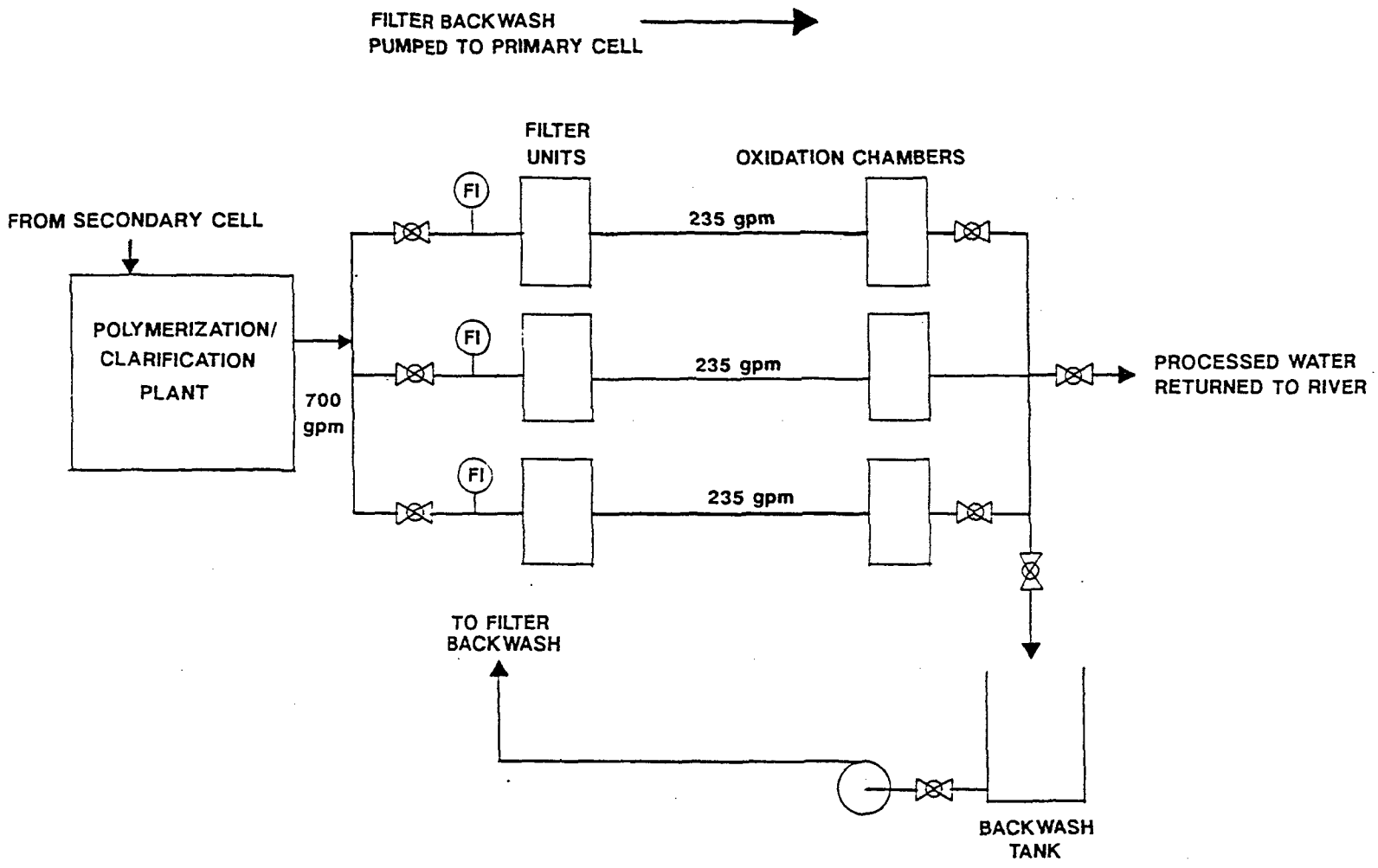

FIGURE 26

CASE IV: CW-225 perox-pure™ PROCESS FLOW DIAGRAM

Hydrogen peroxide, electrical power and equipment maintenance/service will be evaluated in the Economic Analysis section.

Combination Treatment Plant

In this section the combination of photochemical and GAC treatment systems will be discussed, using the rate constants mentioned above, along with the rate constant of 0.20 as equaled from the photochemical pilot study data. The initial conditions for treatment will remain the same, however, in these particular pathways, the photochemical oxidation process will precede the carbon adsorption process, allowing the carbon to polish the oxidation effluent. Since the rate of destruction by the photochemical oxidation is a logarithmic equation, most of the organic concentration is destroyed in approximately the first third of the specified retention time. A cost-effective operation is produced by utilizing the UV/oxidation process during the most efficient span, then adsorbing the remaining levels of organics. This process has more potential for variation and adjustment.

Six cases will be discussed in this section. The first two deal with the design based on the rate constant found using the raw data from the pilot test of 0.20, the second two will be based on the field data rate constant approximated at 1.00, and the final two cases will be based on the laboratory data rate constant for naphthalene, set at 5.00. The rate constants and retention times will be equated to existing **perox-pure™** models. A factor of safety of 1.25 has been incorporated in order to have service recovery in

the system. Also, as with the previous carbon adsorption and photochemical oxidaton treatment applications, superior grade filtration is of the utmost importance, and therefore will be included in the initial capital costs.

The six ensuing cases consist of three process lines to compensate for the required EBCT for the carbon units. The design flow rate for each line is 234 gpm, which equates to 36.5 minutes of Empty Bed Contact Time for the GAC unit. Figure 27 is representative of the six ensuing cases, with only the size of the UV/oxidation equipment being modified respective to each case.

CASE V: Case V illustrates the combination process using a rate constant of 0.20 as calculated from the pilot study data. The PCB concentration is reduced from 36 μg/l to 22 μg/l using three CW 540 **perox-pure™** treatment units with a carbon adsorption unit succeeding each **perox-pure™** unit, reducing the concentration to 0.5 μg/l. Table 9 lists the operational parameters for the GAC unit, as previously done for Carbon Treatment Plant.

Table 9

Case V GAC Parameters

Daily Flow Rate	3.80×10^6 l/day
Mass of PCB Removed	8.20×10^7 μg/day
PCB Adsorbed per Unit Weight of Carbon	126 $\frac{\mu g \text{ PCB}}{g \text{ carbon}}$
Rate of Carbon Exhausted	1434 lb/day

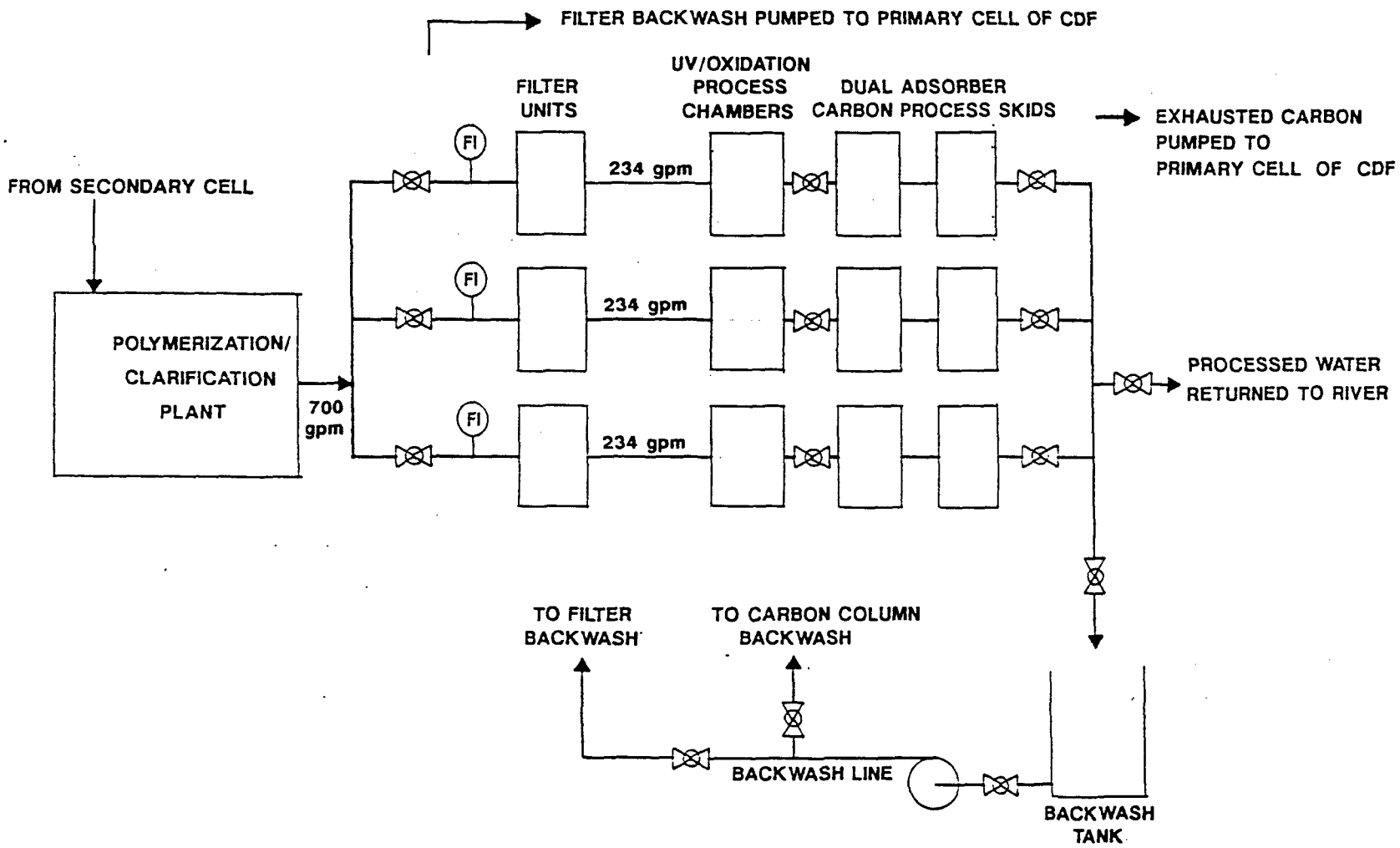

FIGURE 27

CASE V, VI, VII, VIII, IX & X: COMBINATION PROCESS FLOW DIAGRAM

For equipment service, two lines can operate at 285 gpm and not fall below the required thirty minute EBCT for the carbon system, while the third line is being serviced. Assuming that UV/oxidation equipment and carbon service would last for twelve hours, there would be a loss of 93,600 gallons of production. However, by operating all three lines at 285 gpm after service, the recovery time would be approximately ten hours. Table 10 illustrates the initial capital costs for the equipment required for operation.

Table 10

Case V Initial Capital Costs

Quantity	Description	Unit Price	Total Cost
3	Superior quality (total suspended solids removal) multi-layered sand filter rated at 385 gpm	$ 17,658.00	$ 52,974.00
3	CW 540 **perox-pure™** water treatment units with all necessary associated equipment	485,300.00	1,455,900.00
3	Dual adsorbers, 40,000 lb. total capacity carbon units ready for operation	170,000.00	510,000.00
120,000 lbs.	Virgin carbon delivered, loaded into adsorbers	1.20/lb.	144,000.00
		Total	$2,162,874.00

Hydrogen peroxide, electrical power, and equipment maintenance/service will be evaluated in the Economic Analysis section.

CASE VI: Case VI uses the same rate constant of 0.20 for the photochemical process as in Case V. This case involves reducing the initial PCB concentration from 36 μg/l to 14.3 μg/l by using three process lines consisting of a CW 810 **perox-pure™ unit** followed by a GAC unit in each line. The carbon, therefore, reduces the PCB concentration from 14.3 μg/l to the desired level of 0.5 μg/l. As mentioned above the recovery time for this case study is the same, and identical in the four ensuing cases. Tables 11 and 12 illustrate the carbon operational parameters and the initial capital costs for the installed equipment, respectively.

Table 11

Case VI GAC Parameters

Daily Flow Rate	3.8×10^6 l/day
Mass of PCB Removed	5.25×10^7 μg/day
PCB Adsorbed per Unit Weight of Carbon	1.26 $\frac{\mu g \text{ PCB}}{g \text{ carbon}}$
Rate of Carbon Exhausted	916 lbs/day

Table 12

Case VI Initial Capital Costs

Quantity	Description	Unit Price	Total Cost
3	Superior quality (total suspended solids removal) multi-layered sand filter rated at 385 gpm	$ 17,658.00	$ 52,974.00
3	CW 810 **perox-pure™** water treatment units with associated equipment	703,800.00	2,111,400.00
3	Dual adsorbers, 40,000 lb. total capacity carbon units ready for operation	170,000.00	510,000.00
120,000 lbs.	Virgin carbon delivered, loaded into adsorbers	1.20/lb.	144,000.00
		Total	$2,818,374.00

Hydrogen peroxide, electrial power, and equipment maintenance/service will be evaluated in the Economic Analysis section.

CASE VII: Case VII involves reducing the initial PCB concentration of 36 ppb to 14.3 ppb, utilizing three CW 225 **perox-pure™** treatment units with a reaction rate of 1.00, succeeded by the carbon adsorption unit. Table 13 lists the operational parameters of the carbon adsorption, as previously done for the Carbon Treatment Plant.

Table 13

Case VII GAC Parameters

Daily Flow Rate	3.8×10^6 l/day
Mass of PCB Removed	5.27×10^7 µg/l/day
PCB Adsorbed per Unit Weight of Carbon	126 $\frac{\mu g \text{ PCB}}{g \text{ carbon}}$
Rate of Carbon Exhausted	922 lb/day

Table 14 illustrates the initial capital costs for equipment needed for operation.

Table 14

Case VII Initial Capital Costs

Quantity	Description	Unit Price	Total Cost
3	Superior Quality (total solid removal) multilayered sand filter rated at 385 gpm	$ 17,658.00	$ 52,974.00
3	CW 225 **perox-pure™** water treatment units with all necessary association equipment	211,000.00	633,000.00

Table 14 (Con't)

3	Dual Adsorbers 40,000 lb total capacity carbon units ready for operation	170,000.00	510,000.00
120,000 lbs	Virgin carbon delivered, loaded into adsorbers	1.20/lb.	144,000.00
		Total	$1,339,974.00

Hydrogen peroxide, electrical power, and equipment maintenance/ service will be evaluated in the Economic Analysis section.

CASE VIII: Case VIII uses a CW 360 **perox-pure™** unit in each of the three lines, reducing the initial design concentration of 36 ppb PCB to 8.2 ppb, utilizing the 1.00 reaction constant. However, this leaves only a 7.7 ppb PCB concentration to be removed, which cuts the carbon usage to less than half that of Case VII. Tables 15 and 16 illustrate the carbon operational parameters and the initial capital costs for the installed equipment, respectively.

Table 15

Case VIII GAC Parameters

Daily flow rate	3.8×10^6 l/day
Mass of PCB Removed	2.94×10^7 μg/day
PCB adsorbed per unit weight of carbon	126 $\frac{\mu g \text{ PCB}}{g \text{ carbon}}$
Rate of carbon exhausted	514.4 lbs/day

Table 16

Case VIII Initial Capital Costs

Quantity	Description	Unit Price	Total Cost
3	Superior quality (total solid removal) multilayered sand filter rated at 385 gpm	$ 17,658.00	$ 52,974.00
3	CW 360 **perox-pure™** water treatment units, with all necessary association equipment	330,700.00	992,100.00
3	Dual adsorber 40,000 lb total capacity carbon unit ready for operation	170,000.00	510,000.00
120,000 lbs.	Virgin carbon delivered and loaded into adsorbers	1.20/lb.	144,000.00
		Total	$1,699,074.00

Hydrogen peroxide, electrical power, and equipment maintenance/ service will be evaluated in the Economic Analysis section.

CASE IX: Case IX, utilizing a reaction rate of 5.00, involves reducing the initial PCB concentration of 36 ppb to 9.33 ppb by using three process lines, consisting of an LV 60 **perox-pure™** unit followed by a carbon unit in each line. The carbon reduces the concentration to the desired level of 0.5 ppb concentration.

Tables 17 and 18 illustrate the carbon operational parameters and the initial capital costs for the installed equipment respectively.

Table 17

Case IX GAC Parameters

Daily flow rate	3.8×10^6 l/day
Mass of PCB removed	3.37×10^7 μg/day
PCB adsorbed per unit weight of carbon	126 $\frac{\mu g \text{ PCB}}{g \text{ carbon}}$
Rate of carbon exhausted	589 lbs/day

Table 18

Case IX Initial Capital Costs

Quantity	Description	Unit Price	Total Cost
3	Superior quality (total solid removal) multilayered sand filter rated at 385 gpm	$ 17,658.00	$ 52,974.00
3	LV 60 **perox-pure™** water treatment units with associated equipment	96,850.00	290,550.00
3	Dual adsorber, 40,000 lb. total capacity carbon unit ready for operation	170,000.00	510,000.00
120,000 lbs.	Virgin carbon delivered and loaded into adsorbers	1.20/lb.	144,000.00
		Total	$997,524.00

Hydrogen peroxide, electrical power, and equipment maintenance/service will be evaluated in the Economic Analysis section.

CASE X: Case X, utilizing a reaction rate of 5.00, involves reducing the initial PCB concentration of 36 ppb to 2.3 ppb by using a CW 120 **perox-pure™** unit in each line. The succeeding carbon units reduce the concentration to the desired level of 0.5 ppb. Tables 19 and 20 list the carbon parameters and the initial

capital costs for the installed equipment, respectively.

Table 19

Case X GAC Parameters

Daily flow rate	3.8×10^6 l/day
Mass of PCB removed	6.86×10^6 μg/day
PCB adsorbed per unit weight of carbon	126 $\frac{\mu g \text{ PCB}}{g \text{ carbon}}$
Rate of carbon adsorbed	120 lbs/day

Table 20

Case X Initial Capital Costs

Quantity	Description	Unit Price	Total Cost
3	Superior quality (total solid removal) multilayered sand filter rated at 385 gpm	$ 17,658.00	$ 52,974.00
3	CW 120 **perox-pure**™ water treatment units with associated equipment	155,100.00	465,300.00
3	Dual adsorber, 40,000 lb. total capacity carbon unit ready for operation	170,000.00	510,000.00
120,000 lbs.	Virgin carbon delivered and loaded	1.20/lb.	144,000.00
		Total	$1,172,274.00

Hydrogen peroxide, electrical power, and equipment maintenance/service will be evaluated in the Economic Analysis section.

Economic Analysis

The purpose of this section is to evaluate the equipment design proposal cases as to the most cost-effective, pertaining to a length of service ranging from nine months to five years (sixty months). Each case will be analyzed in terms of the initial capital investment and the monthly maintenance/service and operational costs. Then each case will be evaluated in terms of the cost of treating 1000 gallons of supernatant in order to equate the data to a common denominator. To develop the succeeding analysis, the following parameters were used:

1. Additional virgin carbon delivered to the site in 20,000 lb. truck loads
   - $1.20/lb for virgin carbon
   - $0.60/lb. freight
   - $0.20/lb. labor involved to download adsorber and load with carbon

   Therefore $2.00/lb. for total carbon delivery
2. Electrical power set at $0.07 per kilowatt-hour
3. Hydrogen peroxide set at $0.40 per lb. delivered in 40,000 lb. truck loads.
4. Monthly maintenance/service costs of UV/oxidation equipment set by Peroxidation Systems, Inc.
5. A month is equated to thirty calendar days
6. Inflation and depreciation have not been considered for this report.

Summarizing the preceding cases, Table 21 lists the initial capital costs.

Table 21

System Initial Costs

Case	Process System	Capital Costs
I	Carbon Adsorption	$ 942,632.00
II	UV/Oxidation	2,788,632.00
III	UV/Oxidation	1,322,800.00
IV	UV/Oxidation	684,774.00
V	Combination	2,162,874.00
VI	Combination	2,818,374.00
VII	Combination	1,339,974.00
VIII	Combination	1,699,074.00
IX	Combination	997,524.00
X	Combination	1,172,274.00

Table 22 illustrates the total monthly maintenance/service and operational costs for the system cases.

Table 22

System Monthly Operational Costs

Case	Carbon Service	Maintenance Service	Electrical power	Hydrogen Peroxide	Total Monthly Cost
I	$132,000.00	---	---	---	$132,000.00
II	---	$42,468.00	$136,080.00	$27,864.00	206,412.00
III	---	10,335.00	24,192.00	4,473.08	39,000.08
IV	---	10,998.00	23,436.00	4,485.85	38,919.85
V	86,040.00	22,747.50	81,648.00	12,831.71	203,267.21
VI	54,960.00	32,991.75	122,472.00	24,150.73	234,574.48
VII	56,000.00	10,998.00	34,020.00	4,277.64	105,295.64
VIII	30,864.00	15,502.50	54,432.00	8,346.30	109,144.80
IX	35,340.00	6,790.50	9,072.00	1,408.68	52,611.18
X	7,200.00	8,394.75	18,144.00	2,868.96	36,607.71

Combining the information from Table 21 and Table 22, Table 23 was constructed, listing the cost of treatment including the

capital expense per 1000 gallons of supernatant. Table 24 lists the treatment costs per 1000 gallons with the initial investment omitted from the calculations. Figure 28 illustrates the information listed in Table 24.

Table 23

Treatment Costs Inclusive of Initial Capital Expenses per 1000 Gallons

Case	6 Mo.	9 Mo.	20 Mo.	36 Mo.	60 Mo.
I	9.64	7.89	5.97	5.27	4.92
II	22.37	16.21	11.52	9.46	8.43
III	8.65	6.20	3.50	2.52	2.03
IV	5.10	3.83	2.43	1.93	1.68
V	18.79	14.79	10.38	8.78	7.98
VI	23.48	18.26	12.52	10.43	9.38
VII	10.95	8.47	5.74	4.75	4.25
VIII	13.08	9.82	6.47	5.21	4.58
IX	7.30	5.45	3.42	2.68	2.31
X	7.73	5.56	3.17	2.31	1.87

Table 24

Treatment Costs Exclusive of Initial Capital Expenses per 1000 Gallons

Case	Cost in Dollars per 1000 gallons
I	4.40
II	6.88
III	1.30
IV	1.30
V	6.76
VI	7.82
VII	3.51
VIII	3.64
IX	1.75
X	1.22

The information in Table 23 is illustrated in Figures 29, 30 and 31, with respect to total treatment costs per 1000 gallons from

six months to sixty months of operation. Each graph will be examined to the most cost-effective process.

Figure 29 illustrates the treatment costs per 1000 gallons for Cases I, II, V, and VI. Cases V and VI are combination plants, where the UV/oxidation rate constant was 0.20. Note that, however, Case II, a photochemical process with a rate constant of 1.00, is approximately the average of Case V and VI. Case VI, being the least desirable of the processes, uses the photochemical process to reduce the PCB concentration to a little less than half the original concentration, with the GAC unit removing the rest of the PCBs. This graph illustrates how unreasonable the equipment requirements would be if the photochemical process were used with a rate constant of 0.20, which would be destroying the entire PCB concentration. Case I, the carbon adsorption unit, is by far the most cost-effective process in Figure 29.

Figure 30 compares the two combination plants with that of the carbon adsorption unit, where the photochemical system had a rate constant of 1.00. However, the length of service would have to be considered in the assessment. If the plant were to operate for only nine months, then the carbon adsorption, Case I, would be the preferred choice. On the other hand, if the plant were to operate for five years or longer, then Case VII would be the choice. Case VII is more cost-effective than Case VIII since there is a better optimization of each process effective remediation, resulting in a lower operating cost.

Figure 31 compares the carbon adsorption process, Case I, to all the processes that incorporate a rate constant of 5.00 for the

photochemical oxidation. The carbon adsorption is the least preferred system than any of the other processes. Case IV is the best system where only photochemical oxidation was used. Case III, also a photochemical process, has more induced redundancy than Case IV, having a little less than twice the initial capital investment as that of Case IV. However, the Case III system has more overall oxidation potential than Case IV if for some reason it was needed. On the other hand, Case X is better than Case III, for a five year period. It utilizes the photochemical process efficiency, then has a carbon system as backup.

Conclusions

Of all the cases presented in this report, those using an oxidation rate constant of 5.0 proved to be the best choice for PCB remediation, with Case IV being the best. Those cases using an oxidation rate constant of 1.0, in combination with carbon adsorption, were the second best group, with Case VII being better than Case VIII, when considering a sixty month operational period. However, carbon adsorption was better than the combination units when considering the nine month period. Carbon adsorption was superior to the combination Case V and VI, using a rate constant of 0.20 and Case II, using a rate constant of 1.0.

Table 25 lists the treatment systems in order of performance according to costs per 1000 gallons for an operating period of nine months. Table 26 lists the treatment system as Table 25 for an operating period of 60 months.

Table 25

System Preference in Costs per
1000 Gallons for Nine Months

	Case	System
1.	IV	UV/Oxidation[1] - using three (CW-225 **perox-pure™** units
2.	III	UV/Oxidation[1] - using two CW-360 **perox-pure™** units
3.	X	UV/Oxidation[1] - Carbon combination using three CW 120 **perox-pure™** units succeeded by dual adsorbers.
4.	IX	UV/Oxidation[1] - Carbon Combination using three LV 60 **perox-pure™** units succeeded by dual adsorbers
5.	I	Carbon Adsorption - using four lines of a dual adsorber in each line
6.	VII	VV/Oxidation[2] - Carbon combination using three CW 225 **perox-pure™** units succeeded by dual adsorbers
7.	VIII	UV/Oxidation[2] - Carbon combination using three CW 360 **perox-pure™** units succeeded by dual adsorbers
8.	V	UV/Oxidation[3] - Carbon combination, using three CW 540 **perox-pure™** units succeeded by dual adsorbers
9.	II	UV/Oxidation[2] - Using four CW 675/810 **perox-pure™** units
10.	VI	UV/Oxidation[3] - Carbon combination, using three CW 810 **perox-pure™** units succeeded by dual adsorbers

Note:
1. Oxidation Rate Constant = 5.00
2. Oxidation Rate Constant = 1.00
3. Oxidation Rate Constant = 0.20

Table 26

System Preference in Costs per 1000 Gallons for Sixty Months

	Case	System
1.	IV	UV/Oxidation[1]
2.	X	Combination[1]
3.	III	UV/Oxidation[1]
4.	IX	Combination[1]
5.	VII	Combination[2]
6.	VIII	Combination[2]
7.	I	Carbon Adsorption
8.	V	Combination[3]
9.	II	UV/Oxidation[2]
10.	VI	Combination[3]

Note: 1. Oxidation Rate Constant = 5.00
2. Oxidation Rate Constant = 1.00
3. Oxidation Rate Constant = 0.20

However, if only cost per 1000 gallons, omitting the capital investments has more weight in the choice of treatment pathways, then Case X is the most attractive. Table 27 ranks the treatment systems according to only operating costs per 1000 gallons (see Figure 28).

Table 27

System Preference in Costs per 1000 Gallons

	Case	System
1	X	Combination[1]
2	III	UV/Oxidation[1]
	IV	UV/Oxidation[1]
4	IX	Combination[1]
5	VII	Combination[2]
6	VIII	Combination[2]
7	I	Carbon Adsorption
8	V	UV/Oxidation[3]
9	II	UV/Oxidation[2]
10	VI	Combination[3]

Note: 1. Oxidation Rate Constant = 5.00
2. Oxidation Rate Constant = 1.00
3. Oxidation Rate Constant = 0.20

FIGURE 28

OPERATING COSTS

PER 1000 GALLONS

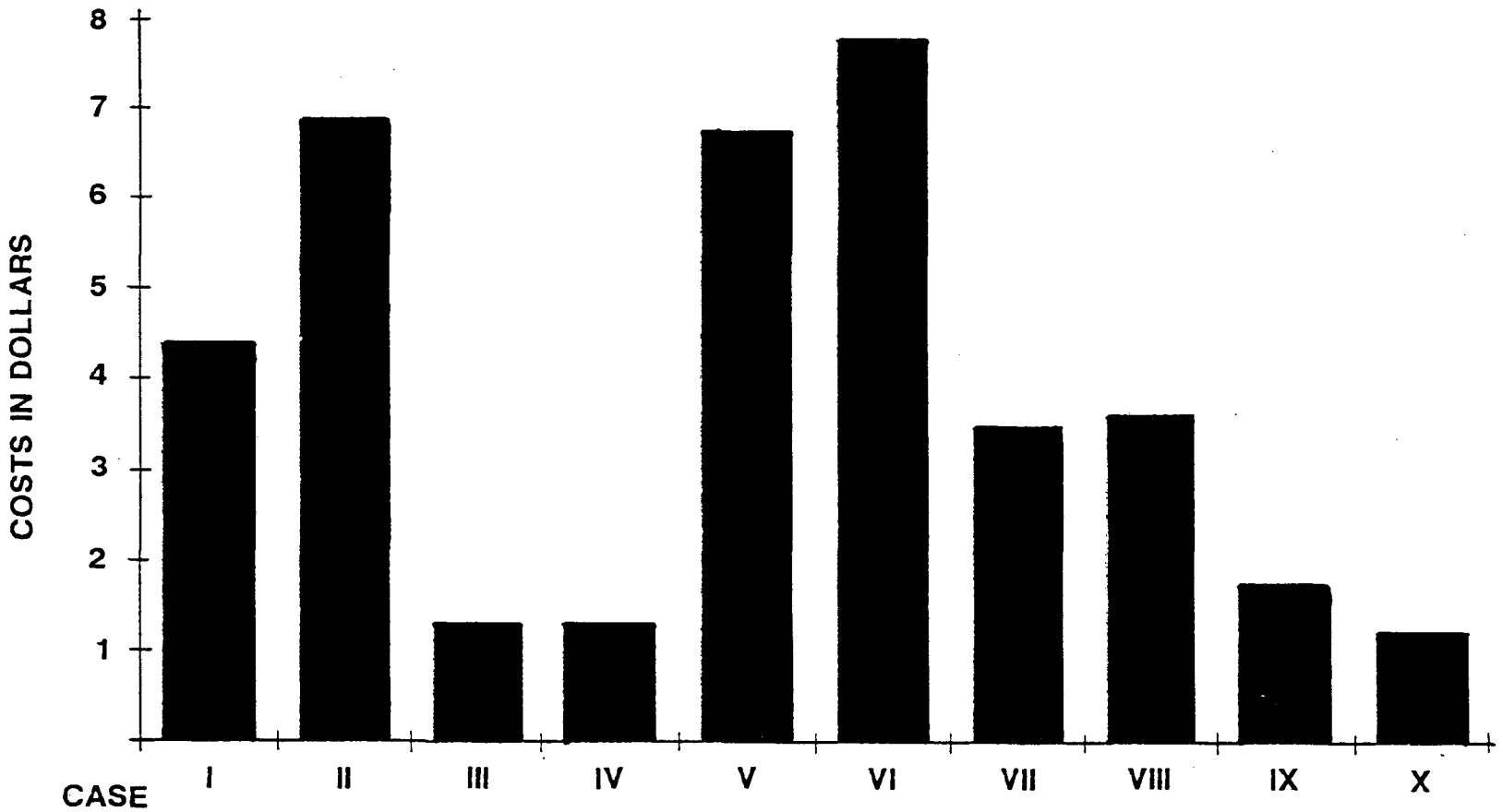

One footnote is that Cases III, IX and X have the most installed redundancy in order to compensate that the influent PCB concentration increases above the design level of 36 ppb. There is a possibility of occurrence, since the PCB concentration in the CDF is dependent on the dredging operations. Case III, at the designed flow rate and full power, has the capability of handling an influent concentration greater than the design level. The two combination processes have the carbon adsorption units as reserve, with longer bed life than the other combination units. Since the EBCT is greater than the prescribed thirty minutes, then only the exhaustion rate of carbon will increase to compensate for the higher PCB concentration. If, however, testing of the secondary cell for PCB concentration shows a wide fluctuation of concentration, the above mentioned process plants can be adjusted accordingly, by modifying both the UV intensity and the hydrogen peroxide dose. Therefore, each system can be operated more efficiently to keep the operation as cost-effective as possible.

As noted in the Conclusion of the pilot study results, no substantial photochemical rate constant can be calculated from the data with any degree of confidence, with respect to a properly clarified/filtered supernatant. All of the case studies, presented in this report, are empirically derived with the exception of Cases VII and VIII, where the photochemical process was designed on the rate constant of 0.20. On the other hand, inclusion of the rate constants of 1.00 and 5.00 for benzene and naphthalene,

respectively, illustrate the potential oxidative power of the photochemical process.

By reviewing the curves from Figures 29, 30, and 31, a correlation can be made between carbon adsorption and photochemical oxidation pertaining to rate constant values, with respect to treatment costs per unit volume. Photochemical oxidation equipment, with rate constants of 1.0 and less, are not competitive to the carbon adsorption treatment process (see Figure 29). The photochemical oxidation process, with a rate constant of 1.0 and in combination with carbon adsorption, is competitive with strictly carbon adsorption, and is better the longer the treatment plant operates. The cost and maintenance of the photochemical equipment is negated by the savings in carbon service (see Figure 30).

As oxidation rate constants increase above 1.0, the photochemical process becomes more cost-effective than carbon adsorption. However, optimally designed combination plants are still the best choice. When oxidation rate constants approach 5.0, then photochemical oxidation becomes the preferred process, above both carbon adsorption and combination plants (see Figure 31).

However, the exact oxidation rate constant with respect to a properly filtered supernatant remains to be determined. This determination can only be done in either future laboratory experimentation and/or field studies.

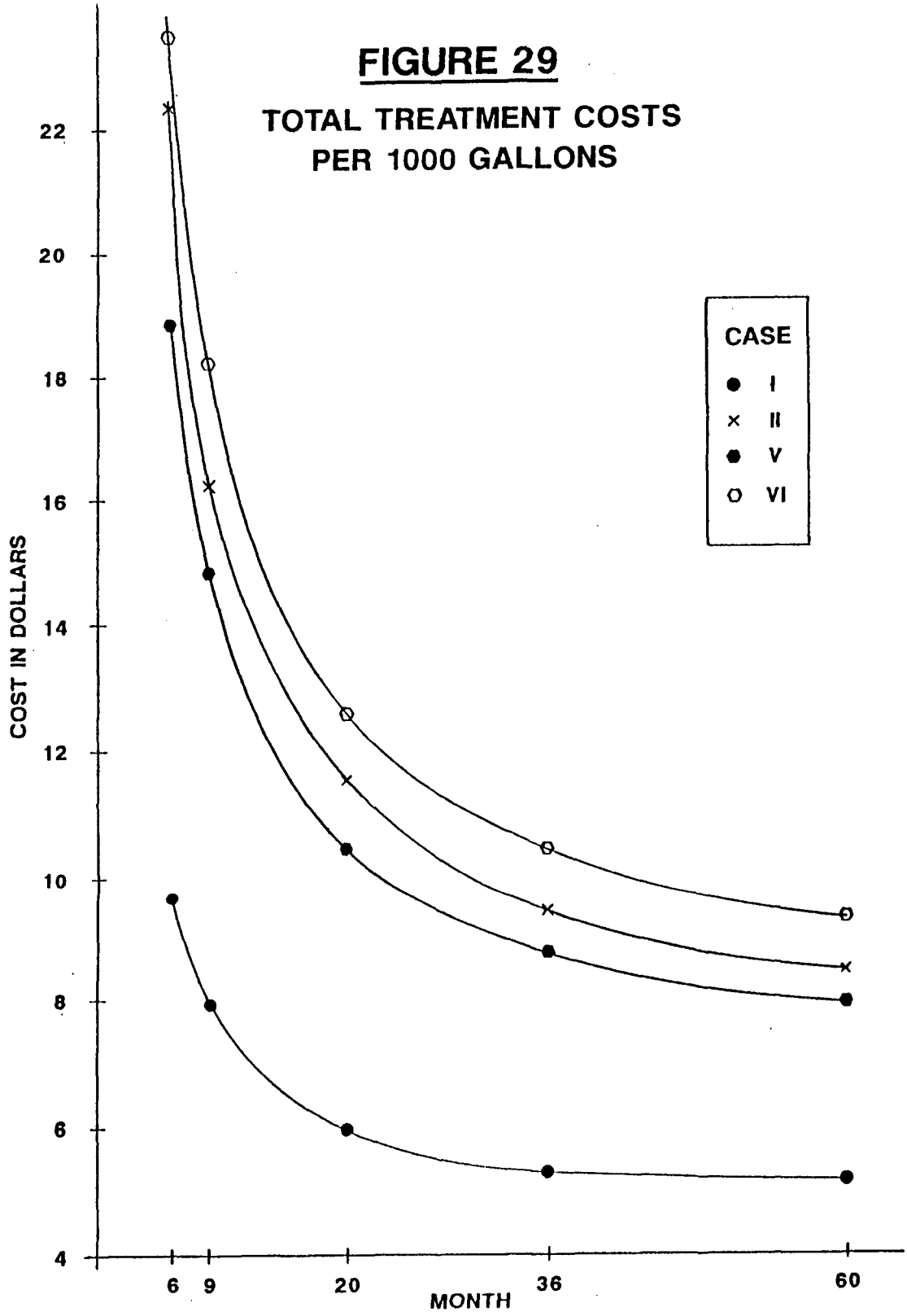
FIGURE 29
TOTAL TREATMENT COSTS
PER 1000 GALLONS
CASE
I
II
V
VI
COST IN DOLLARS
22
20
18
16
14
12
10
8
6
4
6
9
20
36
60
MONTH

FIGURE 30

TOTAL TREATMENT COSTS PER 1000 GALLONS

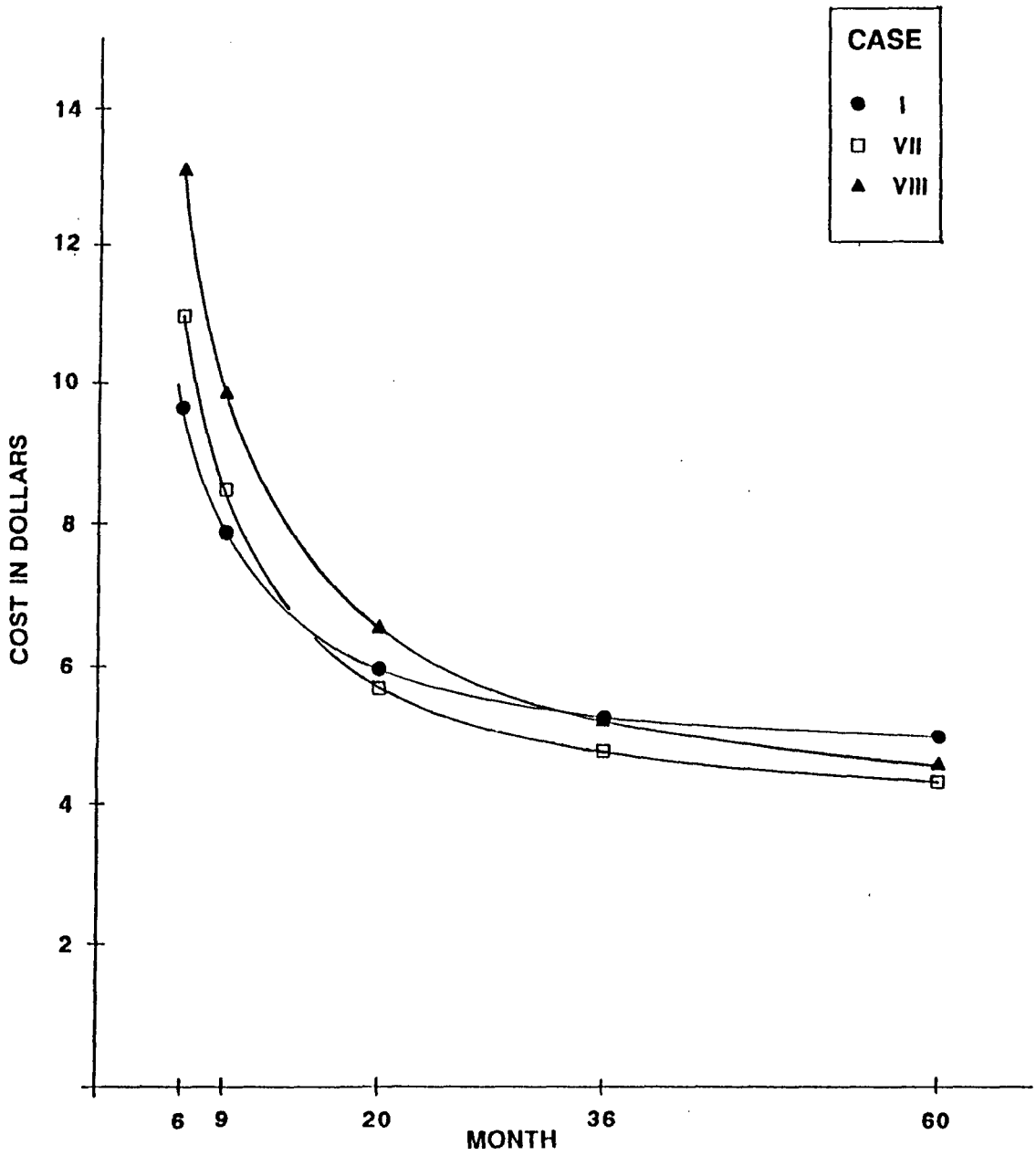

FIGURE 31

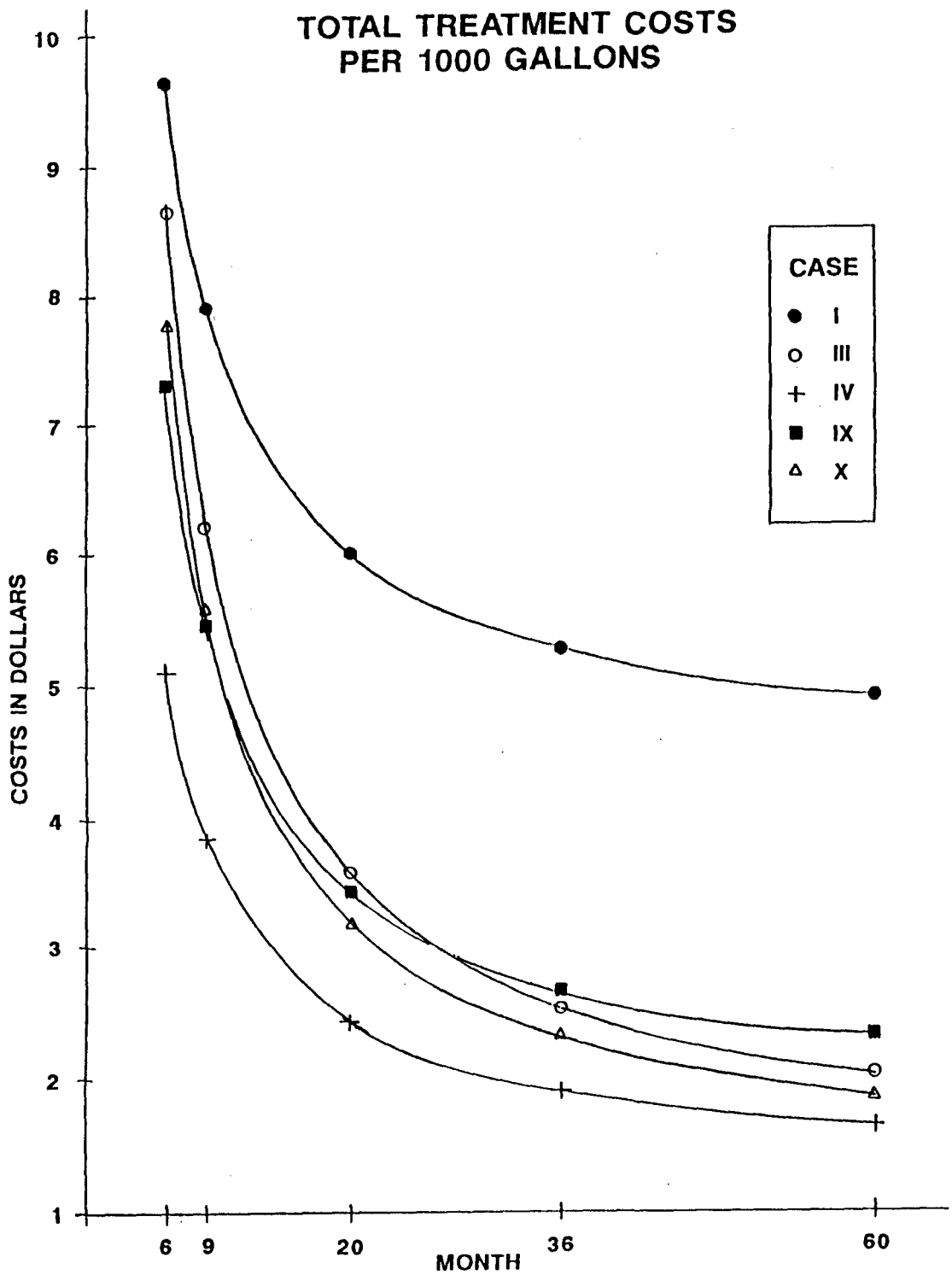
TOTAL TREATMENT COSTS
PER 1000 GALLONS
COSTS IN DOLLARS
10
9
8
7
6
5
4
3
2
1
6
9
20
36
60
MONTH
CASE
I
III
IV
IX
X

APPENDICES

Appendix		
A	Laboratory Isotherm Study	A-1
B	Calculation of Peroxide Dose	B-1
C	PCB Oxidation Process	C-1
D	Rate Constant Development	D-1
E	Aromatic Oxidation Rate Constants	E-1
F	Test Data for Multicolumn Carbon Adsorption	F-1
G	Test Data for Single Column Carbon Adsorption	G-1
H	Test Data for Photochemical Oxidation	H-1

APPENDIX A

Laboratory Isotherm Study

Prepared by USACE Waterways Experiment Station
Vicksburg, MS

CEWES-EE-S

SUBJECT: Laboratory Carbon Adsorption Isotherm Evaluation for PCB-Contaminated Elutriates from New Bedford Sediment

1. Background - A number of clean-up options being considered for the New Bedford Superfund Site involve processes that produce effluents contaminated with PCBS hydraulically dredged sediment removed from the harbor and estuary would be temporarily or permanently placed in a confined disposal facility (CDF) to allow for settling and retention of solids. Water entrained by the dredging process would be decanted from the CDF and may be subjected to further treatment to remove PCBs adsorbed to fine-grained suspended solids and PCBs dissolved in the water. Fine-grained suspended solids may be removed by chemical-assisted clarification and filtration. One option for removing dissolved PCBs in adsorption on activated carbon. Carbon adsorption has been demonstrated for PCB removal during at least one dredging project that removed marine sediment and generated contaminated effluent (Hand 1978). Development of design data for carbon adsorption is usually based on carbon adsorption isotherms developed in the laboratory.

2. Purpose - The purpose of this memorandum is to document a laboratory study conducted at the U.S. Army Engineer Waterways Experiment Station to determine the adsorption capacity of activated carbon for PCBs in simulated CDF effluent. This study was conducted during November 1987 as a part of the U.S. Army Corps of Engineers' (USACE) "Engineering Feasibility Study (EFS) of Dredging and Dredged Material Disposal Alternatives" for the New Bedford Superfund Project.

3. Procedure

a. Dredging of contaminated sediment at New Bedford is a proposed project; therefore, an effluent sample for laboratory testing could not be collected from the field prior to this study. A sample representative of CDF effluent was prepared by adapting the USACE modified elutriate rest procedure to produce a 14-litre sample for testing. The estuary composite sample collected for the EFS and estuary site water were mixed at a solids concentration of approximately 150 g/litre using compressed air and a laboratory stirrer. After mixing

for one hour, the mixture was allowed to settle for 24 hours. After settling the supernatant was siphoned into glass bottles and filtered through Whatman GF/D and GF/F glass fiber filters. The filtrate was composited into a 5-gallon glass carboy, and aliquots were extracted from this sample for batch carbon testing.

b. Activated carbon used for this study was powdered Filtrasorb 300 manufactured by Calgon Carbon Corporation. Aliquots of the filtered elutriate were mixed with carbon at carbon concentrations of 0, 10, 30, 70, 200, 500, and 3000 mg/l. Triplicate mixtures for each carbon dosage were prepared. The carbon was oven dried overnight at 105°C and cooled in a desiccator prior to weighing and adding to 1-litre glass bottles containing 500 ml of the elutriate. The carbon and elutriate were mixed for 24 hours using a laboratory tumbler. Carbon was then separated from the liquid by centrifugation and filtration through Whatman GF/D and GF/F filters. The liquid was stored at 4°C until analysis for PCBs. PCBs were analyzed by soxhlet extraction (50 percent hexane: 50 percent acetone), silica gel cleanup, and quantification in a Hewlett Packard 5880A gas chromatograph equipped with an electron capture detector.

4. <u>Results</u>

a. PCB concentrations vs. activated carbon concentrations are illustrated on Figure 1 for Aroclor 1242 (A1242) and on Figure 2 for Aroclor 1254 (A1254). All analyses for Aroclors 1016, 1221, 1232, 1248, and 1260 were below a detection limit of 0.2 μg/litre. Mean initial concentrations were 3.7 and 4.4 μg/litre for A1242 and 1254, respectively. The lowest carbon concentration 10 mg/litre effectively removed all of the A1242 to a level below the detection limit (0.2 μ/litre) for this test. On the other hand, the detection limit for A1254 (0.2 μ/litre) was not reached until a carbon concentration of 200 mg/litre was used to adsorb the PCBs represented in this Aroclor. Therefore, it appears that A1254 removal will be the controlling factor for activated carbon treatment of New Bedford CDF effluent.

b. Carbon adsorption data are usually plotted according to the Fraundlich equation. This equation has the form:

$$(C_i - C) / M = KC^n \qquad (1)$$

where C_i - concentration of compound to be removed in untreated sample

C - concentration of compound to be removed in treated sample

X = concentration of carbon in treated sample

K - empirical constant determined as the intercept of the line when (C_i - C0 / M vs. C are plotted on log-log grids

n - empirical constant determined as the slope of the line

The carbon isotherm data are plotted as Figure 3. The equation for the line was determined by linear regression and was determined to have a correlation coefficient r of 0.968. The equation for the line is as follows:

$$(C_i - C) / M = 1999\ C^{2.99} \qquad (2)$$

For the data set in Figure 3, concentrations of C_i and C are in μg and M is in units of grams carbon.

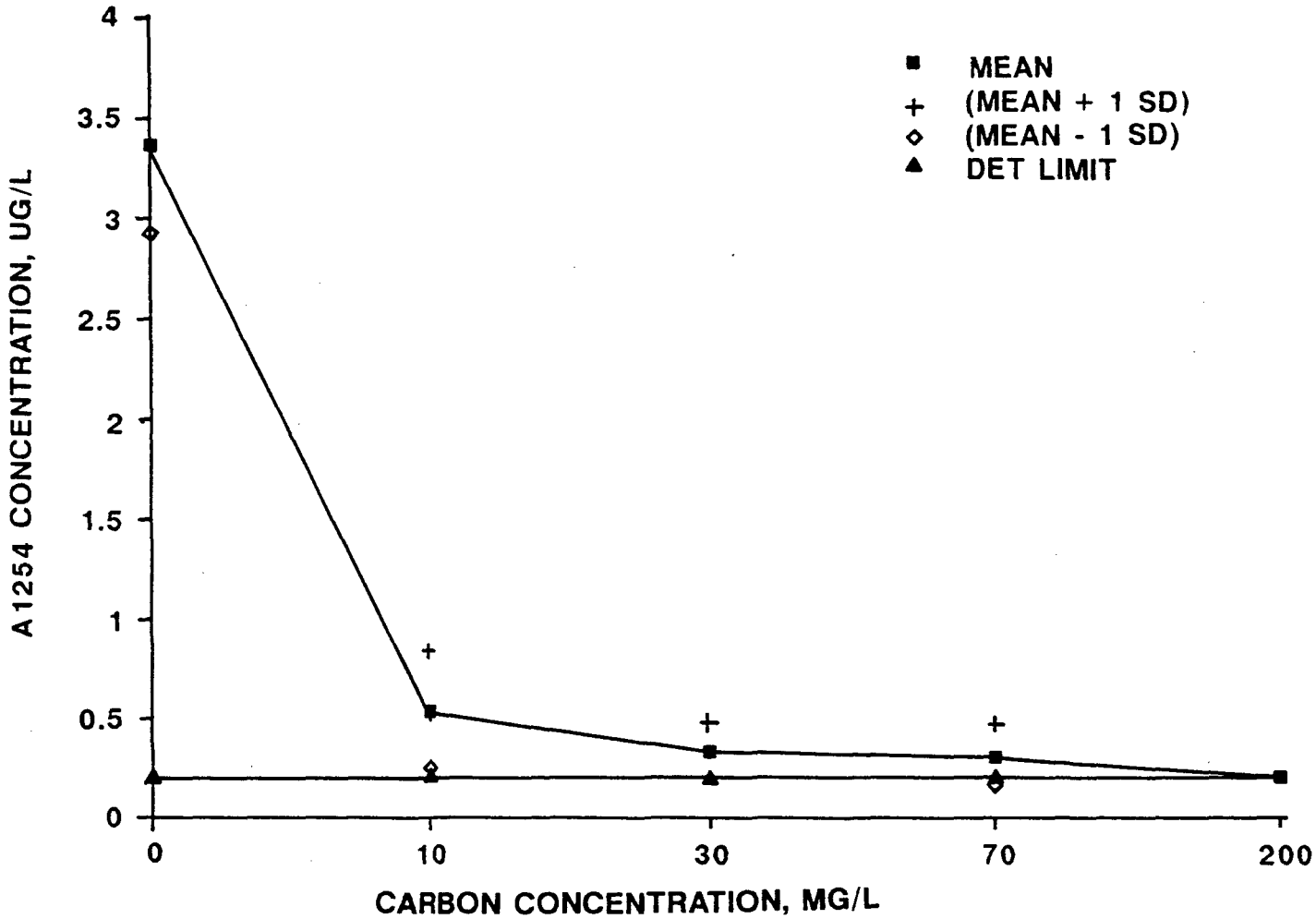

FIGURE 1A

LABORATORY CARBON ADSORPTION DATA FOR A 1254

(NOTE: X - AXIS NOT TO SCALE)

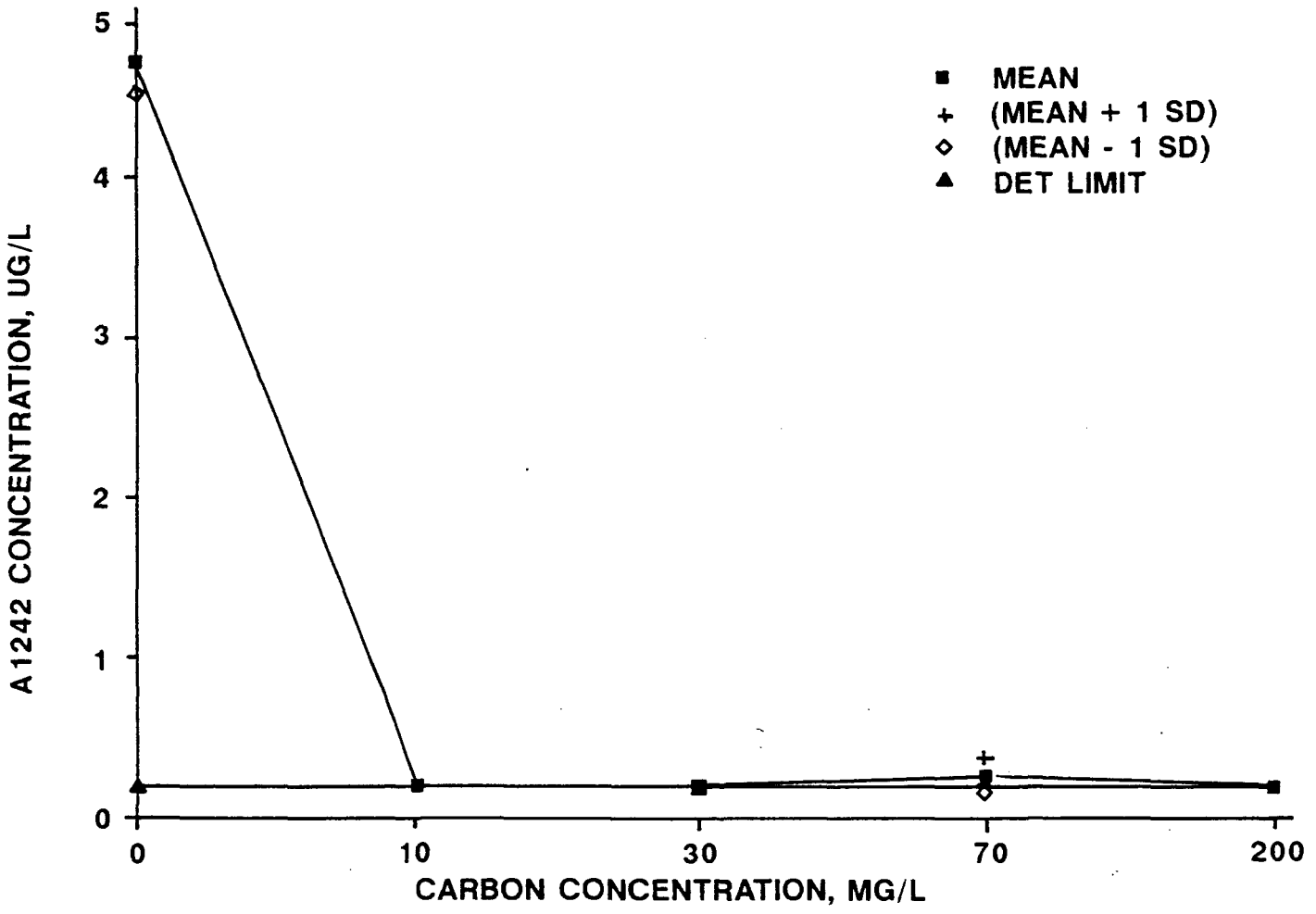

FIGURE 2A

LABORATORY CARBON ADSORPTION DATA FOR A 1242

(NOTE: X - AXIS NOT TO SCALE)

FIGURE 3A

CARB0N ADSORPTION ISOTHERM A1254

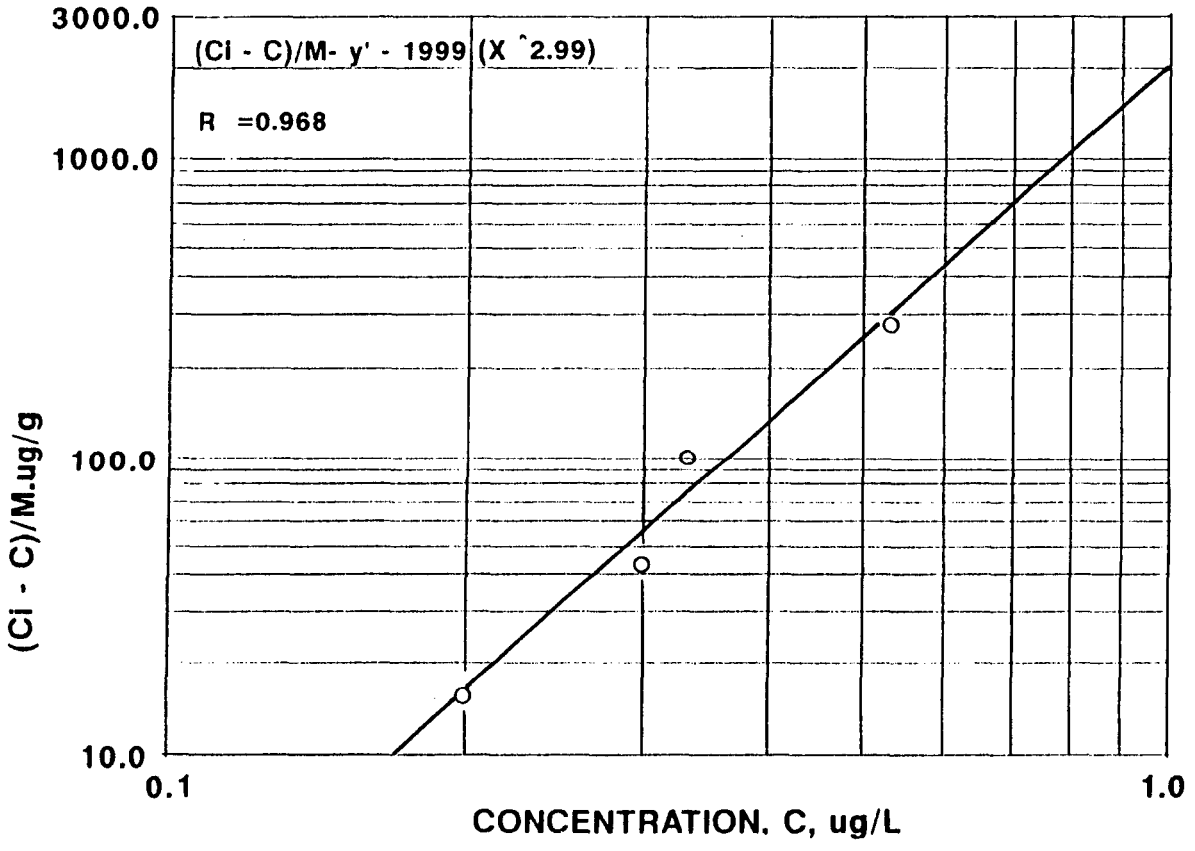

APPENDIX B

CALCULATION OF PEROXIDE DOSE

1. Calculate gallons per day of influent water to be treated

flow rate x 24 $\frac{hrs}{day}$ x 60 $\frac{min}{hr}$

therefore

GPM x 1440 $\frac{min}{day}$ = gallons/day (influent)

2. Peroxide Dosage (50% concentration)

a. one to one ratio concentration[1]

$\frac{\text{Gallons/Day (influent}}{0.50}$ = gallons/day (H202)

b. from lab data, influent peroxide dose in parts per million (ppm)[2]

c. convert to decimal: ppm (H202) x 10^{-6} =

d. actual gallons per day of peroxide:

(ppm x 10^{-6}) $\frac{\text{gallon/day influent}}{0.50 \text{ day}}$ = actual Gal (H202)

e. Given: LMI peroxide pump capacity is 14 gallons per 24 hours

f. calculate percentage of pump capacity used in a 24 hr. day

$$\frac{\text{Actual } \frac{gal}{day} \text{ (H202)}}{14 \frac{gal}{day} \text{ (pump cap.)}} \times 100 = \% \text{ (percent of pump capacity)}$$

g. since pump capacity is the product of frequency and stroke length, the theoretical setting for stroke and frequency is the square root of the pump capacity required.

$$\sqrt{\frac{\% \text{ pump capacity}}{100}} = \text{setting}$$

h. however in more practical terms, find two numbers, relatively equal, with their product equalling the decimal of pump capacity required.

3. Example Problem

a. Influent = 10 gal/min

$$10 \frac{gal}{min} \times 1440 \frac{min}{day} = 14{,}000 \text{ gal/day}$$

b. Equivalent Peroxide

$$\frac{14{,}000 \text{ gal/day}}{0.50} = 28{,}000 \text{ gal/day}$$

c. Assume lab report requires 100 ppm influent peroxide dose

d. Convert to decimal

$$100 \text{ ppm} \times 10^{-6} = .0001$$

e. Actual gallons of H202 required per day

$$.0001 \times 28{,}000 \frac{gal}{day} = 2.8 \text{ gal/day}$$

f. Percent pump capacity

$$\frac{2.8 \text{ gal/day}}{14 \text{ gal/day}} = 0.20$$

$$\sqrt{0.2} = 0.447$$

or

$$0.4 \times 0.5 = .2$$

g. therefore the pump settings will be

50% for stroke
40% for frequency

Notes:

1. Calculation is approximate in that the assumption is made that water and 50% concentration of peroxide have the same specific gravity.

2. If no lab data available, then use twice the TOC concentration for initial test run.

APPENDIX C

PCB OXIDATION PROCESS

Polychlorinated biphenyls are diphenyl rings joined by a single carbon bond where one or more hydrogen atoms are replaced with chlorine atoms. Aroclor 1254 ($C_{12}H_5Cl_5$) has five chlorine ions (54% chlorine) in unassigned positions around the rings, which results in sixty nine possible A1254 molecules (Sittig, 1981). Figure C-1 illustrates 2', 3, 4', 5, 6' pentachlorobiphenyl, where the two benzene rings are joined by the single carbon bond at the 1 and 1' position.

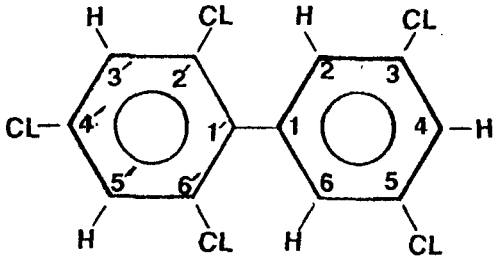

FIGURE C-1

Originally, destruction of PCBs was done by incineration. However, since the intermediate by-products of combustion were sometimes more toxic than the PCBs, containerization became an accepted alternative. The problem of toxic intermediates from PCB destruction was brought on by the improper incineration, where the incineration process was oxygen starved, sometimes producing dioxins and furans. However, the problem could be corrected by an additional injection of oxygen of approximately 25% above the required oxygen demand. This resulted in two unstable benzene molecules, which were easily decomposed to water and carbon dioxide (Ackerman et.al. 1983). The draw back was that incineration was very expensive in both equipment capital and fuel costs.

The photochemical oxidation process uses the combination of chemical oxidation and photolysis in order to achieve complete destruction. PCBs, although very stable in the environment, are very incompatible to strong oxidizers. Chemical oxidation, alone, can only either cleave the chloride ions from the biphenyl molecule, resulting in a biphenyl or break the hydrid bonds within the benzene ring, resulting in short chained hydrocarbons (Emanuel, 1954). If the wrong oxidizer is used, phenols or other chlorinated compounds can be produced. On the other hand, photolysis will cause a chemical change within the molecule since some of the ultraviolet light (UV) is absorbed by the molecule. For an example, photolysis is a standard practice to produce hydrogen gas from H2S with cadium sulfide as a catalyst, by reducing the original molecule to simplier components (Sax and Lewis, 1987).

The UV affects the outer electron orbitals which, in turn, weakens the bond strengths (Getman, 1928). However, the intensity of the UV may not be strong enough to break the benzene ring after the carbon - carbon bond is cleaved. The two processes in conjunction, however, form the proper mechanism to allow complete destruction (Ackerman et. al., 1983).

The biphenyl molecule is composed of two benzene rings, joined together by a single carbon bond. The carbon - carbon bonds within the benzene rings are neither single nor double bonds, but are a hydrid of the two. This results from the p election orbitals overlapping each other. These bonds are weaker than single bonds, but stonger than double bonds and, therefore, allowing them to be incompatible to oxidation (Loudon, 1988).

Destruction of an aromatic, such as PCBs, when using the photochemical oxidation process, will either be carried to completion or will not initiate. The thermal intensity that is present with the incineration process is not a factor with the photochemical process (Ackerman et. al, 1983). There has to be ample UV intensity and enough oxidizer present to initiate the process, therefore, reaching a critical energy level. The duration of the process is only a fraction of a second for each PCB molecule, with the end products being only carbon dioxide (CO_2) and water (H_2O), which are the end products of any complete hydrocarbon oxidation (Solomons, 1980).

Although the events happen practically simultaneously, the following is how the photochemical oxidation process decomposes PCBs:

1) The carbon - chlorine single bonds are broken by photolysis while proximal UV catalized hydroxyl radicals (OH^-) dissociate into hydrogen ions (H^+) and oxygen ions (O^{-2}), with the H^+ and chloride ions (Cl^-) forming hydrochloric acid (HCL) and a O^{-2}.

2) The carbon - carbon single bond between the phenyl rings is broken by photolysis while the hydroxyl radicals oxidize hybrid carbon bonds of the now unstable benzene ring, forming unstable single bonded hydrocarbons. These bonds are then broken by photolysis in conjunction with oxidation from the OH^- radicals resulting in hydrogen ions, carbon ions, and oxygen ions. The carbon and oxygen form CO_2 and the hydrogen and oxygen form H_2O.

3) The HCL ionizes completely in water, producing a H^+ ion and a Cl^- anion. This dissociation produces a slight drop in the pH of the water (Masterton and Slowinski, 1977).

As illustrated above, the only end products of complete PCB oxdidation is carbon dioxide, water, and small traces of hydrochloric acid. The formation of hazardous chloride compounds during oxidation is not possible with hydroxyl oxidation in that the chlorine is immediately bound up as HCl on the outset of oxidation, then dissociated from the hydrogen ion and the chloride anion.

Appendix D

Rate Constant Development

In general the rate constant is different for every reaction and is a fundamental physical constant for a given reaction under a particular set of conditions (Loudon, 1988). Rate constants are developed experimentally by adjusting one particular parameter at a time in order to determine the optimum ate of reaction for a substance or combination of substances. Although each substance has a unique rate constant, duplication in "real world" applications, in general, results in a finite range of numbers, where not all of the controlling parameters can be precisely matches, repeatedly. However, an average of such numbers is used in equipment and process design.

The rate of reaction, the change in concentration of a substance with respect to time, is expressed as

$$\frac{dy}{dt} = ay \qquad \text{Eq. 1}$$

which states that the rate of change of a quantity y is proportional to y. If the proportionality constant, a, is positive and y is positive, then dy/dt is positive and y is increasing. This growth application is illustrated in Figure D-1. On the other hand, if a is negative and y is positive, then dy/dt is negative and y is decreasing or decaying as illustrated in Figure D-2 (Spiegel, 1967). Chemical oxidation of substances is a decay application.

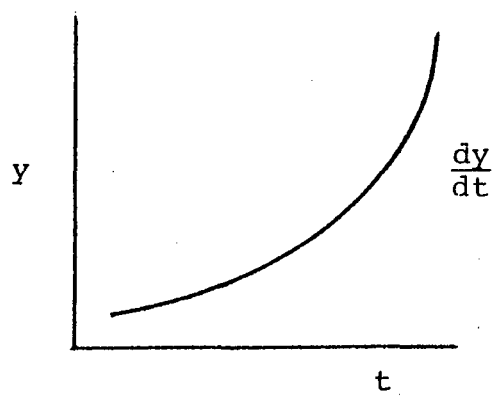

FIGURE D-1

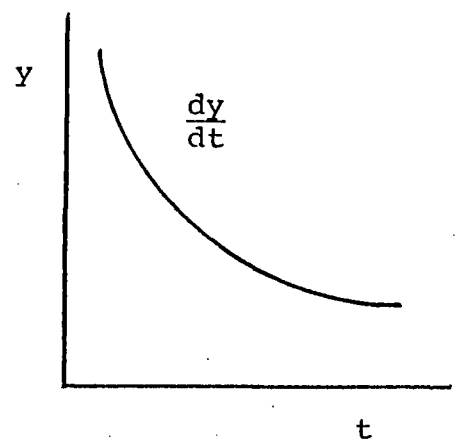

FIGURE D-2

The Law of Mass Action states, "If the temperature is kept constant, the velocity of a chemical reaction is proportional to the product of the concentrations of the substances which are reacting." (Spiegel, 1967). From this the rate of reaction can be expressed in general terms as:

$$r = k_c A^a B^b \qquad \text{Eq. 2}$$

where r is the rate of reaction. The proportionality factor k_c is called the rate coefficient or rate constant. By definition, the rate constant is independent of the quantities of reacting substances but dependent on other variables that influence the rate such as temperature, pressure, density, and oxidation potential, as in the case of organic destruction (Froment and Bischoff, 1990). Consider a unit element of the reaction mixture in which a substance has a unique value. For an irreversible first-order constant density and temperature reaction, the following is true

$$r_A = \frac{-dC_A}{dt} = kC_A \qquad \text{Eq. 3}$$

Application of this principle is when the rate constant k is known, Equation 3 permits the calculation of the rate, rA, for any concentration of the reacting component. On the other hand, when the change in concentration is known as a function of time, Equation 3 allows the calculation of the rate constant. This method of obtaining k is known as the "differential" method.

The algebraic rearrangement of Equation 3 and the integration of both sides leads to:

$$\int_{C_{Ao}}^{C_A} \frac{dC_A}{C_A} = k \int_0^t dt \qquad \text{Eq. 4}$$

$$-kt = \ln \frac{C_{Ao}}{C_A} \qquad \text{Eq. 5}$$

where C_{Ao} is the original concentration of substance A and C_A is the concentration of A after time t. (Levenspiel, 1972). Equation 5 then can be algebraically rearranged to

$$-k = \frac{1}{t} \ln \frac{C_{Ao}}{C_A} \qquad \text{Eq. 6}$$

The units for the rate constant is time^{-1}. The negative sign in the equation merely indicates that the process is a decaying function as illustrated in Figure D-2.

Appendix E

Aromatic Oxidation Rate Constants

The aromatic contaminants used in Table E-1 have been evaluated in numerous full-scale **perox-pure™** applications. The corresponding oxidation rate constant ranges provide a basis for rate calculation, given fluctuations in water quality and inorganic contaminants.

Table E-1

Aromatic Oxidation Rate Constants

Aromatic Contaminant	Oxidation Rate Constant (min^{-1})
Benzene	0.40 to 2.0
Chlorobenzene	0.50 to 2.4
Ethylbenzene	0.45 to 1.9
Toluene	0.50 to 1.8
Xylene	0.55 to 2.2

Although naphthalene has not been extensively evaluated in full-scale **perox-pure™** equipment, several bench-scale studies have been conducted on a variety of water samples containing this contaminant. Translating this data to simulate full-scale applications, an oxidation rate constant for naphthalene, ranging from 4.0 min^{-1} to 6.0 min^{-1} is anticipated.

APPENDIX F

TEST DATA FOR MULTICOLUMN CARBON ADSORPTION

(PPB)

Date	Test	Pond	Filter	C-1	C-2	C-3
12/9/88	A 1242	5.3	4.8	6.1	---	3.0
	A 1254	6.1	4.1	5.1	---	5.0
	Tot. PCB	13.0	7.7	9.6	---	9.0
	TOC	---	---	X	X	---
	Solids	---	---	X	X	---
12/20/88	A 1242	2.5	---	4.1	---	3.6
	A 1254	4.3	---	4.8	---	8.4
	Tot. PCB	6.6	---	9.9	---	12.0
	TOC	1.400	1800	X	X	1200
	Solids	67000	99000	X	X	120000
12/21/88	A 1242	0.7	0.5	<0.5	<0.5	<0.5
	A 1254	<0.5	<0.5	<0.5	<0.5	<0.5
	Tot. PCB	0.9	0.9	0.5	<0.5	<0.5
	TOC	1600	1700	X	X	1200
	Solids	35000	47000	X	X	25000
12/22/88	A 1242	<0.5	0.7	---	---	0.5
	A 1254	<0.5	.6	---	---	.9
	Tot. PCB	0.6	1.1	---	---	1.4
	TOC	<1000	1900	X	X	<1000
	Solids	33000	47000	X	X	5700

X denotes samples taken but not analyzed.

APPENDIX G

TEST DATA FOR SINGLE COLUMN CARBON ADSORPTION

(PPB)

Date	Test	Pond	Filter	CF-2	CF
1/5/89	A 1242	---	0.6	---	---
	A 1254	---	0.5	---	---
	Tot. PCB	---	0.8	---	---
	TOC	3200	<1000	X	1400
	Solids	---	---	X	---
1/6/89	A 1242	---	<0.5	0.8	
	A 1254	---	<0.5	---	1.2
	Tot. PCB	---	0.7	---	1.9
	TOC	1600	1200	X	<1000
	Solids	31000	19000	X	20000
1/7/89	A 1242	0.6	0.8	0.7	<0.5
	A 1254	0.7	0.5	<0.5	0.8
	Tot. PCB	1.1	1.1	<0.5	1.3
	TOC	1600	1200	X	<1000
	Solids	53000	78000	X	17000
1/8/89	A 1242	---	---	0.5	<0.5
	A 1254	---	---	<0.5	0.5
	Tot. PCB	---	---	0.5	<0.5
	TOC	---	1300	X	<1000
	Solids	73000	20000	X	37000
1/9/89	A 1242	---	0.5	<0.5	---
	A 1254	---	<0.5	---	---
	Tot. PCB	---	0.8	---	<0.5
	TOC	1200	1200	X	---
	Solids	38000	28000	X	17000
1/10/89	A 1242	---	<0.5	<0.5	---
	A 1254	---	<0.5	---	<0.5
	Tot. PCB	---	0.7	---	<0.5
	TOC	<1000	---	X	<1000
	Solids	79000	128000	X	12000
1/11/89	A 1242	---	---	<0.5	---
	A 1254	<0.5	---	---	<0.5
	Tot. PCB	0.8	0.6	---	0.6
	TOC	1000	<1000	X	---
	Solids	23000	24000	X	20000

APPENDIX G (Con't)

TEST DATA FOR SINGLE COLUMN CARBON ADSORPTION

(PPB)

1/12/89	A 1242	---	---	<0.5	<0.5
	A 1254	<0.5	<0.5	<0.5	<0.5
	Tot. PCB	0.6	0.6	0.5	0.5
	TOC		---	X	
	Solids	45000	35000	X	12000

X denotes samples taken but not analyzed.

APPENDIX H

TEST DATA FOR PHOTOCHEMICAL OXIDATION OF
AROCLORS 1242, 1254, AND TOTAL PCBs

Date/ Time	Sample ID	Flow Rate (GPM)	Peroxide Conc. PPM In	Peroxide Conc. PPM Out	Number of Lamps Operating	Ambient Temp.	Water Temp. T-1	Water Temp. T-2	A 1242	A 1254	Total PCB
12/19/88											
1125	FM2	15					28	---	8.6	5.4	20.0
1125	UV	15	100	30	8	28	---	---	1.6	0.6	1.9
1140	UV	30	100	30	8	28	---	---	2.7	1.2	3.1
1315	UV	45	100	30	8	28	---	---	3.2	2.3	4.4
1315	FM2	45				28	---	---	4.0	4.6	7.2
1/7/89											
1125	FM2	7.5				36			0.5	<0.5	0.8
1125	UV	7.5	100	>1	7	36	32	84	<0.5	<0.5	<0.5
1453	FM2	7.5				36			1.0	1.3	2.0
1453	UV	7.5	100	>1	8	36	32	84	<0.5	<0.5	0.6
1540	FM2	7.5				38			0.6	<0.5	0.9
1540	UV	7.5	100	>1	5	38	32	42	<0.5	<0.5	0.8
1645	FM2	15				38			0.6	<0.5	1.2
1645	UV	15	100	10	5	38	35	61	<0.5	<0.5	0.6
1730	FM2	30				36			---	---	
1730	UV	30	100	10	5	36	35	42	<0.5	<0.5	0.5
1/8/89											
0900	FM2	45				40			0.6	<0.5	1.0
0900	UV	45	100	30	5	40	32	35	0.5	0.8	1.5
0930	FM2	45			3				0.5	0.8	0.7
0930	UV	45	100	60	3	40	32	32	0.5	<0.5	0.7
1000	FM2	30			3				---	---	
1000	UV	30	100	30	3	40	32	32	<0.5	<0.5	<0.5

APPENDIX H (Con't)

TEST DATA FOR PHOTOCHEMICAL OXIDATION OF
AROCHLORS 1242, 1254, AND TOTAL PCBs

Date/ Time	Sample ID	Flow Rate (GPM)	Peroxide Conc. PPM In	Peroxide Conc. PPM Out	Number of Lamps Operating	Ambient Temp.	Water Temp. T-1	Water Temp. T-2	A 1242	A 1254	Total PCB
1/8/89											
1030	FM2	15				40			<0.5	<0.5	0.6
1030	UV	15	100	40	3	40	32	32	<0.5	<0.5	<0.5
1115	FM2	7.5				40			0.5	<0.5	0.7
1115	UV	7.5	100	10	3	40	32	32	<0.5	<0.5	<0.5
1555	FM2	45							---	---	---
1555	UV	45	50	<10	8	56	32	48	<0.5	<0.5	<0.5
1615	FM2	30				56			<0.5	<0.5	0.7
1615	UV	30	50	4	8	56	32	50	<0.5	<0.5	<0.5
1645	FM2	15				52			0.5	<0.5	0.8
1645	UV	15	50	2	4	52	32	65	<0.5	<0.5	<0.5
1715	UV	7.5	50	0	8	52	32	91	0.5	<0.5	0.8
1715	UV	7.5	50	0	8	52	32	91	<0.5	<0.5	0.6
1/12/89											
1130	FM2	30				39			---	---	---
1130	UV	30	100	30	8	39	34	48	<0.5	<0.5	0.7
1230	FM2	7.5				39			---	---	---
1230	UV	7.5	100	10	8	39	34	81	<0.5	<0.5	0.8

Bibliography

1. Ackerman, D.G., L.L. Scinto, P.S. Bakàhi, R.G. Delunyea, R.J. Johnson, G. Richard, A.M. Takota, E.M. Sworzyn. Destruction and Disposal of PCBs by Thermal and Non Thermal Methods. Park Ridge, NJ: Noyes Data Corporation, 1983.

2. "Adsorption Isotherms", Pittsburg, PA: Calgon Carbon Corporation

3. Allen, J.B., R.S. Joyce, and R.H. Kasch. "Process Design Calculations for Adsorption from Liquids in Fixed Beds of Granular Activated Carbon." Washington, DC: Journal of Water Pollution Control Federation, February 1967.

4. Chopey, Nicholas P. and Tyler G. Hicks, eds. Handbook of Chemical Engineering Calculations. New York: McGraw-Hill Book Co, 1984.

5. Cotton, F. Albert and Geoffrey Wilkinson. Advanced Inorganic Chemistry - A Comprehensive Text, 4th ed. New York: John Wiley and Sons, 1980.

6. Emanuel, N.M., G.E. Zeikov, and Z.K. Maizus. Oxidation of Organic Compounds - Medium Effects in Radical Reactions. New York: Pergarmon Press, 1984.

7. Felder, Richard M. and Ronald W. Rousseau. Elementary Principles of Chemical Processes. New York: John Wiley and Sons, Inc., 1978.

8. Froelich, Emery M. "UV/Hydrogen Peroxide Treatment - A New Chemical Oxidation Process for Toxic Organics." California Water Pollution Control Association Conference, Anaheim, CA, 10 May 1985.

9. Froment, Gilbert F. and Kenneth B. Bischoff. Chemical Reactor Analysis and Design, 2nd ed. New York: John Wiley and Sons, 1990.

10. Getman, Frederick H, Ph. D. Outline of Theoretical Chemistry, 4th ed. New York: John Wiley and Sons, 1928.

11. Hager, Donald G. and Martin E. Flentje. "Removal of Organic Contaminants by Granular-Carbon Filtration." Journal of American Water Works Association, Vol. 57, November 1965.

12. Hager, D.G. and C.G. Loven. "The Purification of Contaminated Groundwater by Chemical Oxidation or Adsorption." Superfund - A One-Day Symposium. The Kansas City Section of Chemical Engineer, Kansas City, MO., 12 November 1987.

13. Hager, D.G., C.G. Loven, and C.L. Giggy. "Chemical Oxidation Destruction of Organic Contaminants in Groundwater." HMCRI National Conference and Exposition, Washington, D.C., 18 November 1987.

14. Hager, D.G. and C.E. Smith. "The UV-Hydrogen Peroxide Process: An Emerging Technology for Groundwater Treatment." Hazmat West 85, Long Beach, CA, 5 December 1985.

15. Hager, D.G. and C.E. Smith. "The Destruction of Organic Contaminants in Water by Chemical Oxidation." Haztech International, Denver, CO, 15 August 1986.

16. Hand, David W., John C. Crittenden, Harisharora, James Miller, and Benjamin W. Lykins, Jr. "Designing Fixed-Bed Adsorbers to Remove Mixtures of Organics." Journal of America Water Works Association, January 1989.

17. Komai, R.Y., V. Nieneyer, and G. Addis. Proceedings: 1985 EPRI PCB Seminar. Electric Power Institute, 1986.

18. Laforna, Joseph P. "Clean-up After Spills of Toxic Substances." Journal of Water Pollution Control Federation, April 1978.

19. Levenspiel, Octave. Chemical Reaction Engineering, 2nd ed. New York: John Wiley and Sons, Inc., 1972.

20. Loudon, G. Marc. Organic Chemistry, 2nd ed. Menlo Park, CA: Benjamin/Cummings Publishing Company, Inc., 1988.

21. Masterton, William L. and Emil J. Slowinski. Chemical Principles, 4th ed. Philadelphia: W.B. Saunders Company, 1977.

22. Meislich, Herbert, Howard Mechamkin, and Jacob Sharefkin. Schauum's Outline Series - Theory and Problems of Organic Chemistry. New York: McGraw-Hill Publishing Company, Inc. 1977.

23. Merritt, Frederick S, ed. Standard Handbook for Civil Engineers, 3rd ed. New York: McGraw-Hill Book Co., 1983.

24. Metcalf and Eddy, Inc. Wastewater Engineering: Treatment Disposal Reuse, 2nd ed. New York: McGraw-Hill Book Co., 1979.

25. Miller, James C. "Restoration of an Aquatic Ecosystem: Polychlorinated Biphenyl Removal from the South Branch of the Shiawassee River." Hazardous Material Spills Conference, 1984.

26. New England Division, USACE, 1989, "New Bedford Harbor Superfund Pilot Study." Interim Report, Waltham MA.

27. Purcell, Edwin J. Calculus with Analytic Geometry, 2nd ed. Englewood Cliffs, NJ: Prentice-Hall, Inc., 1972.

28. Sax, N. Irving and Richard J. Lewis, Sr., eds. Hawley's Condensed Chemical Dictionary, 11th ed. New York: Van Nostrand Reinhold Company, 1987.

29. Sittig, Marshall. Handbook of Toxic and Hazardous Chemicals. Barkridge, NJ: Noyes Publishing Co., 1981.

30. Smith, J.M. Chemical Engineering Kinetics, 3rd ed. New York: McGraw-Hill Book Co., Inc., 1981.

31. Solomons, T.W. Graham. Organic Chemistry, 2nd ed. New York: John Wiley and sons, 1980.

32. Spiegel, Murry R. Applied Differential Equations, 2nd ed. Englewood Cliffs, NJ: Printice-Hall, Inc., 1967.

33. Weast, Robert C, Ph.D. and Melvin J. Astle, Ph.D. CRC Handbook of Chemistry and Physics, 60th ed. Boca Raton, FL: Chemical Rubber Company Press, Inc., 1979.