RETURN TO SER AR INDEX

From: Steve Block
To: Sneeringer, Paul J NAE
Subject: Fwd: FW: Marsh Island Drawing for Volume Calcs.
Date: Thursday, July 26, 2012 4:41:08 PM
Attachments: Grading-Plan for Volume Calcs.zip

---------- Forwarded message ----------
From: Wood, Craig <cwood@louisberger.com>
Date: Thu, Jun 21, 2012 at 9:43 AM
Subject: FW: Marsh Island Drawing for Volume Calcs.
To: "CMorris@apexcos.com" <CMorris@apexcos.com>
Cc: Steve Block <steve.block@noaa.gov>

Chris: Per your request I have attached the cad files from which you can extract the desired information. Please keep in mind our plans are NAVD 88 and not NGVD 29. Regards, Craig

From: Luppino, Christopher
Sent: Thursday, June 21, 2012 9:38 AM
To: Wood, Craig
Subject: Marsh Island Drawing for Volume Calcs.

Here is the drawing. It best represents the final grading at the site.

Christopher Luppino, E.I.T.
Environmental Engineer

Phone: 401.521.5980

Direct: 401.415.9450

295 Promenade Street | Providence, Rhode Island 02908

LBWS Email Logo

This message, including any attachments hereto, may contain privileged and/or confidential information and is intended solely for the attention and use of the intended addressee(s). If you are not the intended addressee, you may neither use, copy, nor deliver to anyone this message or any of its attachments. In such case, you should immediately destroy this message and its attachments and kindly notify the sender by reply mail. Unless made by a person with actual authority conferred by The Louis Berger Group, Inc., (LBG) the information and statements herein do not constitute a binding commitment or warranty by LBG. LBG assumes no responsibility for any misperceptions, errors or misunderstandings. You are urged to verify any information that is confusing and report any errors/concerns to us in writing.

SDMS Doc ID 526361

P | Please consider the environment before printing this e-mail.

--
Steve Block
Habitat Restoration Specialist
NOAA Restoration Center
55 Great Republic Drive
Gloucester, MA 01930
Office: (978) 281-9127
Mobile: (978) 609-7653
E-mail: steve.block@noaa.gov

NATIONAL OCEANIC AND ATMOSPHERIC ADMINSTRATION
RESTORATION CENTER

MARSH ISLAND SALT MARSH RESTORATION

FAIRHAVEN, MASSACHUSETTS

FINAL DESIGN
JUNE 2012

NOT FOR CONSTRUCTION

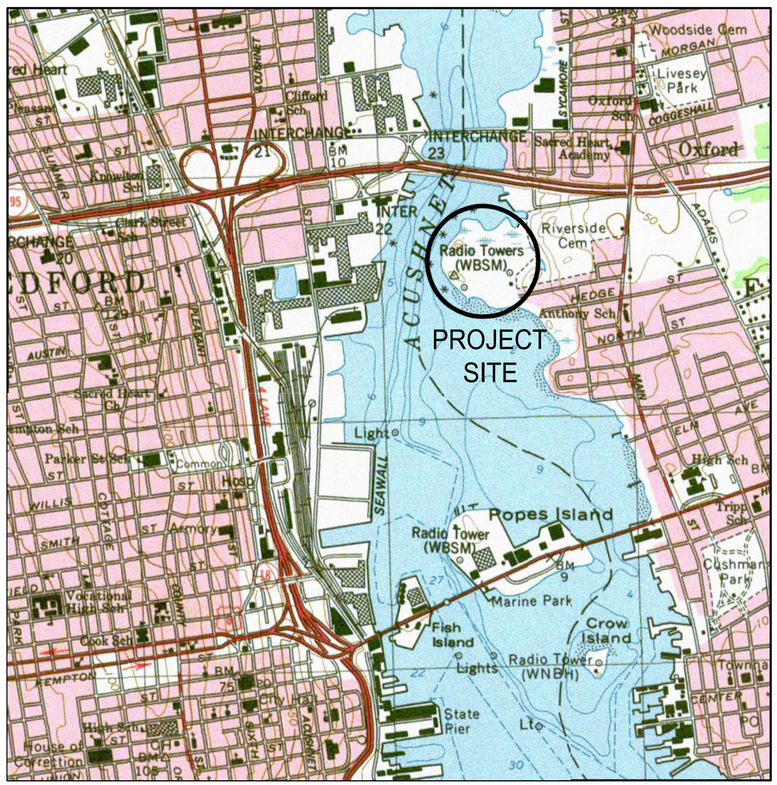

LOCATION MAP
SCALE: 1"=1,000'

INDEX OF DRAWINGS

NUMBER	DESCRIPTION
C-1	LEGEND & GENERAL NOTES
C-2	EXISTING CONDITIONS OVERVIEW AND KEY PLAN
C-3	EXISTING CONDITIONS PLAN (1 OF 2)
C-4	EXISTING CONDITIONS PLAN (2 OF 2)
C-5	SITE PREPARATION & EROSION CONTROL PLAN (1 OF 2)
C-6	SITE PREPARATION & EROSION CONTROL PLAN (2 OF 2)
C-7	INTERIM GRADING PLAN
C-8	FINAL GRADING PLAN (1 OF 2)
C-9	FINAL GRADING PLAN (2 OF 2)
C-10	CROSS SECTION A-A
C-11	CROSS SECTION B-B
C-12	PLANTING PLAN (1 OF 2)
C-13	PLANTING PLAN (2 OF 2)
C-14	FINAL SITE OVERVIEW PLAN (1 OF 1)
C-15	CONSTRUCTION DETAILS 1
C-16	CONSTRUCTION DETAILS 2
C-17	CONSTRUCTION DETAILS 3
C-18	CONSTRUCTION DETAILS 4
C-19	CONSTRUCTION DETAILS 5
C-20	RADIO ANTENNA UNDERGROUND LIMITS

SITE MAP
SCALE: 1"=200'

PREPARED FOR:

National Oceanic and Atmospheric Administration - Restoration Center
55 GR=AT R=PUBLIC DRIV=
GLOUC=ST=R, MA 01930

PREPARED BY:

THE Lo INC.
ENGINEERS • PLANNERS
SCIENTISTS • ECONOMISTS
MANCH=ST=R, NH (603) 644-5200
N==DHAM, MA (781) 444-3330
PROVID=NC=, RI (401) 521-5980

GENERAL NOTES

1. TOPOGRAPHICAL BASE MAPPING PREPARED BY EASTERN TOPOGRAPHICS, WOLFEBORO, NH. REFERENCE PLAN ENTITLED "TOPOGRAPHICAL WORKSHEET OF THE WINSEGANSET RESERVE MARSHES, FAIRHAVEN, MA FOR TETRA TECH EM, INC. CAMBRIDGE MA." SCALE 1"=200', CONTOUR INTERVAL: 1', PLAN PHOTO DATE: 19 MAR 03 (1:3600), COMPILATION DATE 13 MAY 03, GROUND CONTOUR BY: NORDE-DIST SURVEY QUINCY, MA.

2. SUPPLEMENTAL SPOT GRADES, WETLAND LOCATIONS, SANITARY SEWER LOCATIONS, SOUNDINGS AND DETAILED LOCATIONS AT RIVER AVE. ARE FROM A FIELD SURVEY CONDUCTED BY G.A.F. ENGINEERING, INC OCTOBER 2007, NOVEMBER 2004, AND JUNE 2003.

3. THE LOCATION OF UNDERGROUND UTILITIES ARE APPROXIMATE. THE EXACT SIZE, LOCATION, AND TYPE OF EXISTING UTILITIES IN THE AREA IS NEITHER INTENDED NOR IMPLIED. THE CONTRACTOR IS RESPONSIBLE FOR MAKING FIELD INVESTIGATIONS AND OBTAINING INFORMATION FROM UTILITY COMPANIES AND INDIVIDUALS TO DETERMINE EXACT LOCATION AND ELEVATIONS OF ALL SUBSURFACE UTILITIES AND STRUCTURES. CONTRACTOR SHALL NOTIFY DIGSAFE BEFORE PROCEEDING WITH WORK (MINIMUM 72 HOUR ADVANCED NOTICE).

4. ALL ELEVATIONS ON THIS PLAN RELATE TO NAVD 1988.

5. LIMITS OF ALL PROPERTIES SHOWN ON PLANS ARE APPROXIMATE AND WERE INTERPOLATED FROM TAX MAPS.

6. THE CONTRACTOR SHALL SUBMIT A DETAILED CONSTRUCTION SCHEDULE AND OUTLINE OF CONSTRUCTION METHODOLOGIES FOR CONSTRUCTION OF THE PROPOSED SALT MARSH, AND WOODEN PEDESTRIAN BRIDGE PRIOR TO CONSTRUCTION, FOR APPROVAL BY THE CONTRACTING OFFICER'S TECHNICAL REPRESENTATIVE (COTR). STABILIZED CONSTRUCTION ENTRANCES SHALL BE USED AT ACCESS POINTS FOR ALL NON-PAVED STAGING AREAS.

7. THE CONTRACTOR SHALL PROTECT EXISTING VEGETATION OUTSIDE OF THE WORK LIMITS.

8. THERE SHALL BE NO DISTURBANCES TO THE SHORELINE REMEDIATION AREAS AS SHOWN ON THE PLANS.

9. DEWATERING SHALL BE CONDUCTED DURING EXCAVATION. THE PRIMARY OBJECTIVE OF THE DESIGN OF THE DEWATERING PROGRAM IS TO CONTROL SURFACE AND GROUNDWATER LEVELS TO PROVIDE A RELATIVE STABLE WORKING SURFACE. THE DEWATERING SHALL INCLUDE A SERIES OF CRUSHED STONE SUMPS CONSTRUCTED AT LOW POINTS WITHIN THE CONSTRUCTION AREA. ACCUMULATED WATER SHALL BE PUMPED TO A DEWATERING BASIN FOR TREATMENT AND CONTROL OF SEDIMENT PRIOR TO BEING DISCHARGED TO THE HARBOR.

10. THE CONTRACTOR SHALL COMPLY WITH ALL CONDITIONS CONTAINED IN RELEVANT PERMITS, INCLUDING THOSE ISSUED BY THE US ARMY CORPS OF ENGINEERS, THE COMMONWEALTH OF MASSACHUSETTS DEPARTMENT OF ENVIRONMENTAL PROTECTION, AND FAIRHAVEN CONSERVATION COMMISSION.

11. THE CONTRACTOR SHALL USE EXTREME CAUTION TO MINIMIZE EROSION AND SEDIMENTATION DURING CONSTRUCTION NEAR CREEKS AND WETLANDS.

12. REQUIRED EROSION AND SEDIMENTATION CONTROL SHOWN ON THE PLAN IS APPROXIMATE. ACTUAL TYPE AND LOCATION SHALL BE DETERMINED BY THE COTR. THE CONTRACTOR SHALL INSTALL PROPOSED EROSION CONTROL DEVICES PRIOR TO CONSTRUCTION ACTIVITY AND SHALL BE RESPONSIBLE FOR THEIR MAINTENANCE, REPOSITIONING AND REMOVAL THROUGHOUT THE DURATION OF CONSTRUCTION.

13. THE CONTRACTOR SHALL TAKE PRECAUTIONS TO PREVENT DAMAGE TO WORK AREA OR EQUIPMENT BY HIGH WATER OR BY STORMS. CONTRACTOR SHALL CONSULT LOCAL TIDE CHARTS TO SCHEDULE SENSITIVE WORK DURING TIMES OF LOWER PERIOD TIDES. THE OWNER AND COTR MAY PROHIBIT THE CARRYING OUT OF WORK AT ANY TIME WHEN IN HIS/HER JUDGMENT HIGH WATERS OR STORM CONDITIONS ARE UNFAVORABLE OR UNSUITABLE, OR AT ANY TIME REGARDLESS OF THE WEATHER WHEN PROPER PRECAUTIONS ARE NOT BEING TAKEN TO SAFEGUARD PREVIOUSLY CONSTRUCTED WORK OR WORK IN PROGRESS. IN CASE OF DAMAGE CAUSED BY FAILURE OF THE CONTRACTOR TO TAKE ADEQUATE PRECAUTIONS, THE CONTRACTOR SHALL REPAIR OR REPLACE EQUIPMENT/WORK DAMAGED AND SHALL MAKE SUCH REPAIRS OR REBUILD PARTS OF THE DAMAGED WORK AS DIRECTED BY THE COTR, AT NO ADDITIONAL COST.

14. THE CONTRACTOR SHALL SUBMIT A PROPOSED STAGING PLAN TO THE COTR FOR APPROVAL. AT A MINIMUM, THE STAGING PLAN SHALL IDENTIFY STAGING AREA LOCATIONS, CONSTRUCTION ACCESS, EROSION CONTROL MEASURES. EROSION CONTROL DETAILS, REFUELING SITE DETAILS, AND STABILIZED CONSTRUCTION ENTRANCE DETAILS. THE CONTRACTOR SHALL RESTORE STAGING AREAS AFTER THE SALT MARSH RESTORATION IS COMPLETE. THE CONTRACTOR SHALL NOT STORE, HANDLE AND/OR DISPOSE OF HAZARDOUS MATERIALS WITHIN THE WORK AREA OR STAGING AREA. DERIVED WASTE SHALL BE REMOVED AND DISPOSED IN ACCORDANCE WITH FEDERAL AND STATE REGULATIONS. ALL ROCK, SAND, GRAVEL, FILL OR OTHER FOREIGN SUBSTRATE MATERIAL STORED IN STAGING AREA MUST BE STORED ON TOP OF FILTER FABRIC TO FACILITATE RECOVERY AND PREVENT DEGRADATION OF NATIVE SOILS DURING SITE CLEAN-UP. NO FOREIGN SAND, TOPSOIL, LOAM OR OTHER FOREIGN SUBSTRATE MAY BE ADDED TO STAGING AREA DURING SITE CLEAN-UP AND REGRADING WITHOUT PRIOR APPROVAL FROM THE COTR. EXISTING PAVEMENT SHALL BE SWEPT CLEAN OR RESTORED TO EXISTING CONDITIONS BY OTHER MEANS TO THE SATISFACTION OF THE COTR. ALL COSTS ASSOCIATED WITH THE PROPOSED STAGING AREAS (INCLUDING EROSION CONTROL, REFUELING SITE, STABILIZED CONSTRUCTION ENTRANCES, AND RESTORATION) SHALL BE SUBSIDIARY TO THE PROJECT.

15. THE REFUELING SITE, IF REQUIRED, SHALL ONLY BE USED FOR SITE CONSTRUCTION VEHICLES (I.E. EXCAVATORS AND BULLDOZERS). NO TRUCKS ARE TO BE REFUELED OR STORED IN THE PROJECT OR STAGING AREA. THE FUEL MUST BE TRANSPORTED TO THE SITE DAILY. NO FUEL IS TO BE STORED ON SITE.

16. ALL WORK WILL BE CONDUCTED WITHIN DEFINED LIMITS OF DISTURBANCE (L.O.D). DISTURBANCES OUTSIDE THE L.O.D. SHALL BE STRICTLY PROHIBITED UNLESS APPROVED IN WRITING BY THE COTR.

17. WORK HOURS SHALL BE 7:00 AM TO 5:00 PM MONDAY THROUGH FRIDAY, WITH SATURDAY WORK UPON PRIOR APPROVAL BY THE COTR. NO WORK OUTSIDE THESE HOURS SHALL BE PERMITTED WITHOUT APPROVAL FROM THE TOWN OF FAIRHAVEN AND COTR.

18. CONSTRUCTION VEHICLES SHALL BE PROHIBITED FROM USING TABOR STREET WITHOUT PRIOR WRITTEN APPROVAL FROM THE COTR.

19. FOLLOWING SITE CONSTRUCTION ACTIVITIES, CONTRACTOR SHALL CONDUCT A 2-INCH MILL AND OVERLAY ON THE LENGTH OF RIVER AVENUE FROM THE INTERSECTION WITH THE RIGHT-OF-WAY WITH KENDRICK AVENUE TO THE INTERSTATE 195 OVERPASS. ALL RIMS AND CATCH BASINS SHALL BE RESTORED AND RESET AS NEEDED.

20. CONTRACTOR SHALL PROTECT EXISTING OIL AND GAS SEPARATOR LOCATED ON KENDRICK AVENUE DURING CONSTRUCTION WITH STEEL PLATING. CONTRACTOR SHALL PAY ANY DAMAGES ASSOCIATED WITH REPAIR OR REPLACEMENT OF SEPARATOR.

21. THE CONTRACTOR SHALL INSTALL VISIBLE BARRIER AROUND CONCRETE ANTENNA ANCHORS PRIOR TO ANY LAND DISTURBANCE. THE VISIBLE BARRIERS SHALL CONSIST OF ORANGE SECURITY FENCING.

CONSTRUCTION SEQUENCE

THE FOLLOWING IS THE RECOMMENDED CONSTRUCTION SEQUENCE TAKING INTO CONSIDERATION SITE CONDITIONS, TIDAL FLOW, AND THE AVAILABLE CONSTRUCTION WINDOW. THE CONTRACTOR SHALL SUBMIT TO THE COTR A DETAILED CONSTRUCTION SEQUENCE, EROSION CONTROL PLAN, AND DETAILS FOR APPROVAL.

1. INSTALL EROSION AND SEDIMENT (E&S) CONTROLS AND PERIMETER CONTROLS AT THE LIMITS OF CONSTRUCTION, AROUND STAGING AREAS, AS INDICATED ON THE PLANS.

2. CONSTRUCT CONSTRUCTION ACCESS ROAD, WHEEL WASH AREA, STAGING AREA AND STABILIZED CONSTRUCTION ENTRANCES TO NON-PAVED STAGING AREAS (IF NEEDED). INSTALL JERSEY BARRIERS AS DIRECTED BY THE COTR.

3. CONSTRUCT REFUELING AREA WITHIN STAGING AREA AS REQUIRED/DIRECTED BY THE COTR.

4. EXCAVATE MATERIAL ACCORDING TO GRADING PLAN FOR PROPOSED SALT MARSH. USE EXCAVATED MATERIALS TO CONSTRUCT BERM.

5. IMPLEMENT CONSTRUCTION DE-WATERING PROVISIONS AS APPROPRIATE IN ACCORDANCE WITH THE TECHNICAL SPECIFICATIONS.

6. COORDINATE INSTALLATION OF UNDERGROUND RADIO ANTENNA (SEE RADIO ANTENNA UNDERGROUND LIMITS PLAN SHEET).

7. CONSTRUCT ROADWAY AND PARKING AREA AND INSTALL FENCING.

8. INSTALL WOODEN PEDESTRIAN VIEWING AREAS.

14. INSTALL PLANTINGS AND SOIL STABILIZATION MEASURES. SEE PLANTING DETAIL.

15. COMPLETE EXCAVATION OF TIDAL INLET.

16. CONSTRUCT PEDESTRIAN BRIDGE.

17. REMOVE REFUELING SITE FROM STAGING AREA.

18. REMOVE ALL MATERIAL FROM THE STAGING AREAS.

19. RESTORE THE STAGING AREAS TO EXISTING CONDITIONS. SEE NOTE 14 IN GENERAL NOTES.

20. RESTORE REMAINING DISTURBED AREAS AND SALT MARSH AREAS AS DIRECTED.

21. REMOVE ALL TEMPORARY E&S CONTROLS AFTER ALL DISTURBED AREAS ARE STABILIZED AND AS APPROVED BY THE COTR.

22. CONDUCT FINAL PAVEMENT RESTORATION OF RIVER ROAD.

FAIRHAVEN BOARD OF PUBLIC WORKS AGREEMENT

1. THE CONTRACTOR SHALL COMPLY WITH ALL TERMS AND CONDITIONS OF THE AGREEMENT BETWEEN THE TOWN OF FAIRHAVEN, BOARD OF PUBLIC WORKS AND NOAA. (SEE SECTION APPENDIX A).

2. THE CONTRACTOR SHALL SUPPORT AND PROTECT THE TOWN'S SANITARY SEWER AND MANHOLE ACCESS STRUCTURES (SMH).

3. THE CONTRACTOR SHALL MONITOR DEFORMATION MONITORING POINTS (DMPS) ON 8 SANITARY MANHOLES (SMHS) WEEKLY DURING THE PROJECT.

4. THE CONTRACTOR SHALL PROVIDE A PRE-INSPECTION AND POST-INSPECTION OF THE SEWER IN ACCORDANCE WITH SECTION 33 01 30.

PHRAGMITES REMOVAL

1. PRIOR TO START OF CONSTRUCTION, THE CONTRACTOR SHALL CONDUCT HERBICIDAL TREATMENT USING AQUANEAT, A GLYPHOSATE HERBICIDE (OR APPROVED EQUAL) OF ALL EXISTING STANDS OF PHRAGMITES WITHIN THE LIMITS OF WORK TO PREVENT RHIZOME RE-GROWTH.

2. THE CONTRACTOR SHALL MOW THE PHRAGMITES STANDS PRIOR TO THE GROWING SEASON (MARCH 1 – APRIL 1).

3. AQUANEAT, A GLYPHOSATE HERBICIDE (OR APPROVED EQUAL) SHALL BE APPLIED BY THE CONTRACTOR DURING THE LATE-SUMMER OR FALL MONTHS (AUGUST 15 – OCTOBER 1) AND PRIOR TO THE FIRST FROST WHEN PLANTS ARE ACTIVELY GROWING AND IN FULL BLOOM.

4. THE CONTRACTOR SHALL USE LI-700 (OR APPROVED EQUAL), A SURFACTANT AS WELL AS TURF TRAX (OR APPROVED EQUAL), A MARKER DYE TO PROVIDE VISUAL EVIDENCE OF AREAS TREATED DURING THE HERBICIDE APPLICATION.

5. APPLICATION OF AQUANEAT SHALL BE TO ACTIVELY GROWING PHRAGMITES AFTER FULL LEAF ELONGATION. DUE TO THE DENSE NATURE OF THE VEGETATION, WHICH MAY PREVENT GOOD SPRAY COVERAGE AND UNEVEN STAGES OF GROWTH, REPEAT TREATMENTS MAY BE NECESSARY TO MAINTAIN CONTROL.

6. FOLLOWING HERBICIDE TREATMENT, THE CONTRACTOR SHALL EXCAVATE PHRAGMITES STANDS AND PROPERLY DISPOSE OF THIS MATERIAL TO AVOID SPREAD OF PHRAGMITES ELSEWHERE.

7. ANY RE-GROWTH OF PHRAGMITES WITHIN THE LIMITS OF WORK IN THE SECOND GROWING SEASON FOLLOWING EXCAVATION SHALL BE MANAGED ACCORDING TO ITEMS 1 THROUGH 5 ABOVE.

8. ALL APPLICATORS MUST HAVE A CURRENT MASSACHUSETTS PESTICIDE LICENSE AND SHALL HAVE A MINIMUM OF FIVE YEARS EXPERIENCE, INCLUDING THE CONTROL OF INVASIVE SPECIES. MIXING, APPLYING AND/OR DISPOSING OF HERBICIDES SHALL ALWAYS BE IN ACCORDANCE WITH INSTRUCTIONS ON THE LABELS. ALL APPLICATORS MUST WEAR THE REQUIRED PERSONAL PROTECTIVE EQUIPMENT SPECIFIED ON THE LABEL.

9. ALL WORK SHALL CONFORM TO MASSACHUSETTS PESTICIDE LAWS AND REGULATIONS PER THE DEPARTMENT OF AGRICULTURAL RESOURCES PESTICIDE BUREAU.

10. DESIRABLE VEGETATION SHALL BE PROTECTED FROM BOTH SPRAY AND OTHER PHYSICAL DAMAGE. ANY DESIRABLE VEGETATION DAMAGED BY HERBICIDE OR BY OTHER MEANS SHALL BE REPLACED OR COMPENSATED FOR BY THE CONTRACTOR AT NOT ADDITIONAL EXPENSE TO THE OWNER.

11. AFTER TREATMENT, ALL DEAD PLANT MATERIAL SHALL BE REMOVED FROM THE SITE AND DISPOSED OF IN AN APPROPRIATE MANNER.

LEGEND

EXISTING	DESCRIPTION
2.0	INTERMEDIATE CONTOUR
5.0	INDEX CONTOUR
× 5.7	SPOT GRADE
5.0	F.E.M.A. FLOOD ZONE AT EL. 5.0 NAVD 1988
	DITCH/SWALE
W	WATER LINE
WV	WATER GATE/VALVE
	WATER SHUTOFF/CURB STOP
	HYDRANT
	UTILITY POLE
	GUY POLE
	FENCE
	GUARD RAIL
	BOUND
	TREELINE
	BORING LOCATION
STK102 6.7	BENCHMARK
	PROPERTY LINE
	ROCK OUTCROP
	AREA OF PCB SHORELINE REMEDIATION (BY OTHERS)
	BORDERING VEGETATED WETLAND
	EXISTING SALT MARSH
	EXISTING COASTAL BANK
	EXISTING COASTAL BEACH
	LAND UNDER OCEAN

PROPOSED	DESCRIPTION
2+00	CONSTRUCTION BASELINE
2	PROPOSED GRADE CONTOUR
x 10.4	FINISHED GRADE ELEVATION
	24-INCH RIPRAP
	SALT MARSH POOL
LOD	LIMIT OF DISTURBANCE
SF	SILT FENCE
	CHAIN LINK FENCE
	WALKING TRAIL
	ADA COMPLIANT WALKING TRAIL

COMMONWEALTH OF MASSACHUSETTS
CHRISTOPHER S. FEENEY
No. 41105
REGISTERED PROFESSIONAL ENGINEER

THE Louis Berger Group, INC.
ENGINEERS • PLANNERS
SCIENTISTS • ECONOMISTS
MANCHESTER, NH (603) 644-5200
NEEDHAM, MA (781) 444-3330
PROVIDENCE, RI (401) 521-5980

REV.	DESCRIPTION	DATE

NOT FOR CONSTRUCTION

National Oceanic and Atmospheric Administration - Restoration Center
55 GREAT REPUBLIC DRIVE
GLOUCESTER, MA 01930

MARSH ISLAND
SALT MARSH RESTORATION
FAIRHAVEN, MASSACHUSETTS

LEGEND & GENERAL NOTES

SHEET TITLE:

SCALE:	AS SHOWN	DATE:	JUNE 2012
PROJECT MANAGER:	CAW		
PROJECT ENGINEER:	CF		
CHECKED BY:	CC	SHEET No.	C-1
DRAWN BY:	CL		
JOB NUMBER:	JI1822		

Jun 12, 2012 – 4:07pm F:\PROJECT\1822_NOAA_Marsh Island\DRAWINGS\FINAL DESIGN\CAD DRAWINGS\GENERAL\Index-Legend.dwg

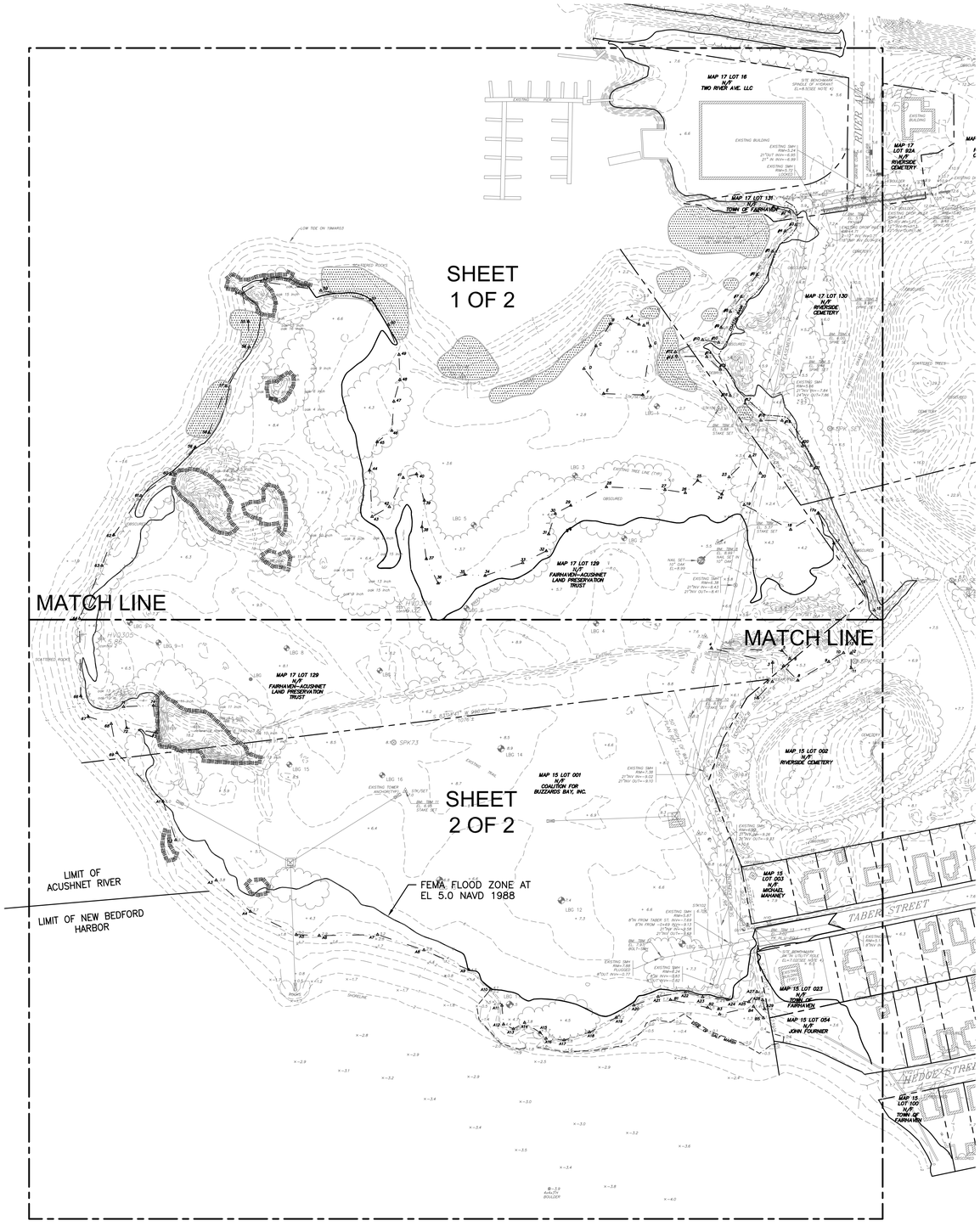

NOTE:

1. RESOURCE AREA DELINEATION PERFORMED BY THE LOUIS BERGER GROUP INC., AND APPROVED BY THE FAIRHAVEN CONSERVATION COMMISSION, 2004.

LIST OF ABBUTTERS

PLAT	LOT	ADDRESS	OWNER
17	016	2 RIVER AVENUE	TWO RIVER AVE, LLC
17	129	2 MARSH ISLAND	FAIRHAVEN–ACUSHNET LAND PRESERVATION TRUST
17	130	KENDRICK AVENUE	RIVERSIDE CEMETERY
17	131	KENDRICK AVENUE	TOWN OF FAIRHAVEN

BENCHMARK TABLE:

LABEL	NORTHING	EASTING	POINT ELEVATION	DESCRIPTION
TBM 1	2699247.9054	816500.1023	8.48	SPIKE SET
TBM 2	2699260.7894	816426.8624	5.15	PK SET
TBM 3	2699113.3943	816420.8121	9.98	SPIKE SET
TBM 4	2699056.0054	816375.3653	6.00	SPIKE SET
TBM 5	2698968.9525	816341.0672	5.48	SPIKE SET
TBM 6	2698917.1470	816214.9650	5.88	STAKE SET
TBM 7	2698709.1103	816213.7611	5.37	STAKE SET
TBM 8	2698680.9866	816187.5507	8.99	NAIL SET IN 10"OAK
TBM 9	2698650.2317	816577.4282	8.13	PK SET
TBM 10	2698439.2242	816171.3103	8.15	STAKE SET
TBM 11	2698322.9724	815728.3405	6.95	STAKE SET
TBM 12	2698061.8679	816126.8196	7.97	BOLT IN SMH
TBM 13	2698109.6529	816267.6466	7.02	PK IN U–POLE

100 50 0 100 200

SCALE IN FEET

THE Louis Berger Group, INC.

ENGINEERS • PLANNERS
SCIENTISTS • ECONOMISTS

MANCHESTER, NH (603) 644–5200
NEEDHAM, MA (781) 444–3330
PROVIDENCE, RI (401) 521–5980

REV.	DESCRIPTION	DATE

NOT FOR CONSTRUCTION

National Oceanic and Atmospheric Administration - Restoration Center

55 GREAT REPUBLIC DRIVE
GLOUCESTER, MA 01930

MARSH ISLAND
SALT MARSH RESTORATION
FAIRHAVEN, MASSACHUSETTS

EXISTING CONDITIONS
OVERVIEW AND KEY PLAN

SHEET TITLE:

SCALE:	AS SHOWN	DATE:	JUNE 2012
PROJECT MANAGER:	CAW		
PROJECT ENGINEER:	CF		
CHECKED BY:	CC	SHEET No.	C-2
DRAWN BY:	CL		
JOB NUMBER:	JI1822		

Jun 12, 2012 – 4:30pm F:\PROJECT\1822_NOAA_Marsh Island\DRAWINGS\FINAL DESIGN\CAD DRAWINGS\CIVIL\Existing-Conditions.dwg

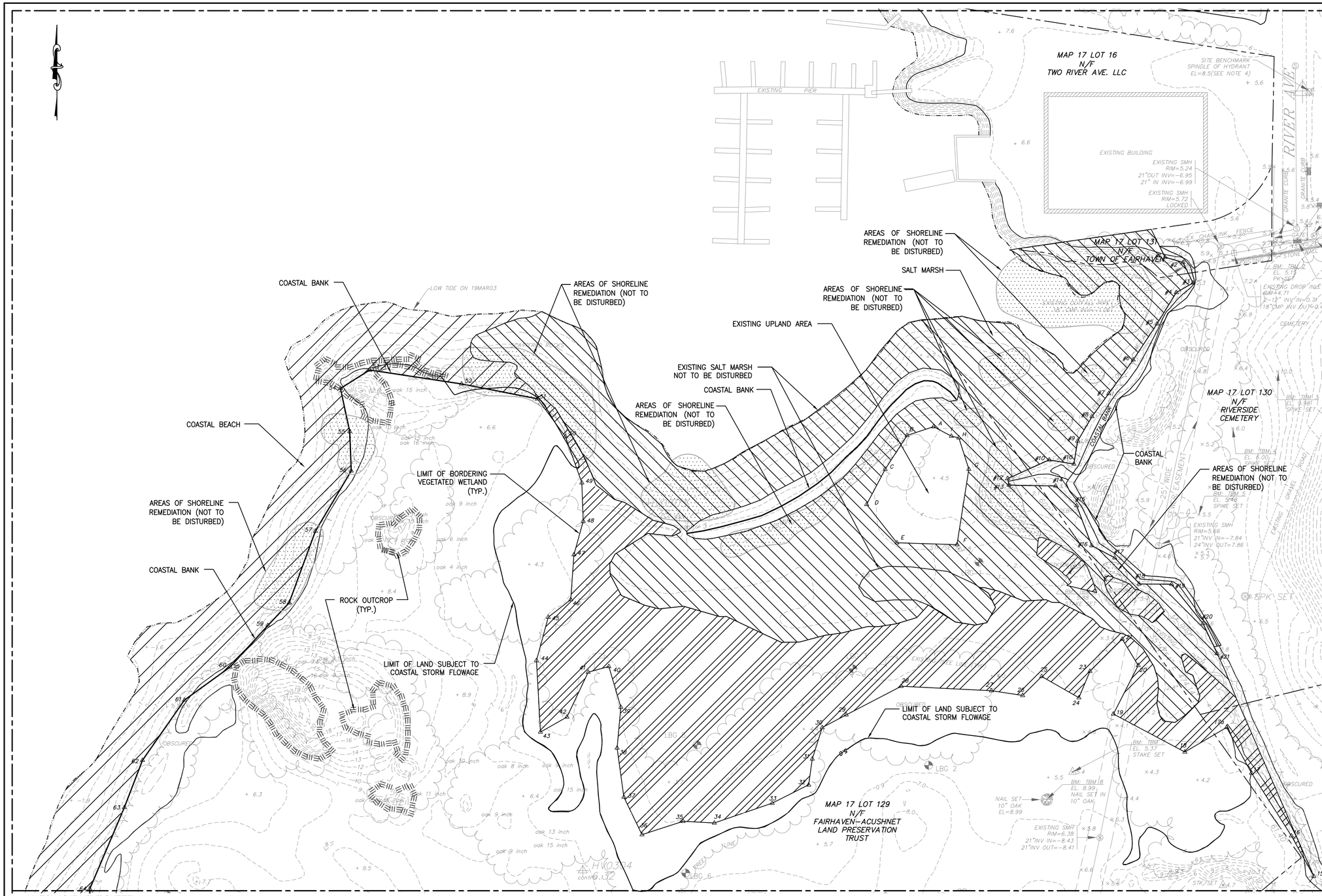

CONTINUED ON SHEET C-4

NOTE:

1. RESOURCE AREA DELINEATION PERFORMED BY THE LOUIS BERGER GROUP INC., AND APPROVED BY THE FAIRHAVEN CONSERVATION COMMISSION, 2004.

LIST OF ABBUTTERS

PLAT	LOT	ADDRESS	OWNER
17	016	2 RIVER AVENUE	TWO RIVER AVE, LLC
17	129	2 MARSH ISLAND	FAIRHAVEN–ACUSHNET LAND PRESERVATION TRUST
17	130	KENDRICK AVENUE	RIVERSIDE CEMETERY
17	131	KENDRICK AVENUE	TOWN OF FAIRHAVEN

BENCHMARK TABLE:

LABEL	NORTHING	EASTING	POINT ELEVATION	DESCRIPTION
TBM 1	2699247.9054	816500.1023	8.48	SPIKE SET
TBM 2	2699260.7894	816426.8624	5.15	PK SET
TBM 3	2699113.3943	816420.8121	9.98	SPIKE SET
TBM 4	2699056.0054	816375.3653	6.00	SPIKE SET
TBM 5	2698968.9525	816341.0672	5.48	SPIKE SET
TBM 6	2698917.1470	816214.9650	5.88	STAKE SET
TBM 7	2698709.1103	816213.7611	5.37	STAKE SET
TBM 8	2698680.9866	816187.5507	8.99	NAIL SET IN 10"OAK
TBM 9	2698650.2317	816577.4282	8.13	PK SET
TBM 10	2698439.2242	816171.3103	8.15	STAKE SET
TBM 11	2698322.9724	815728.3405	6.95	STAKE SET
TBM 12	2698061.8679	816126.8196	7.97	BOLT IN SMH
TBM 13	2698109.6529	816267.6466	7.02	PK IN U–POLE

50 25 0 50 100

SCALE IN FEET

THE Louis Berger Group, INC.
ENGINEERS • PLANNERS
SCIENTISTS • ECONOMISTS
MANCHESTER, NH (603) 644–5200
NEEDHAM, MA (781) 444–3330
PROVIDENCE, RI (401) 521–5980

REV.	DESCRIPTION	DATE

NOT FOR CONSTRUCTION

National Oceanic and Atmospheric Administration - Restoration Center

55 GREAT REPUBLIC DRIVE
GLOUCESTER, MA 01930

MARSH ISLAND
SALT MARSH RESTORATION
FAIRHAVEN, MASSACHUSETTS

SHEET TITLE: EXISTING CONDITIONS PLAN (1 OF 2)

SCALE:	AS SHOWN	DATE:	JUNE 2012
PROJECT MANAGER:	CAW		
PROJECT ENGINEER:	CF		
CHECKED BY:	CC	SHEET No.	C-3
DRAWN BY:	CL		
JOB NUMBER:	JI1822		

Jun 13, 2012 – 10:01am F:\PROJECT\1822_NOAA_Marsh Island\DRAWINGS\FINAL DESIGN\CAD DRAWINGS\CIVIL\Existing-Conditions.dwg

CONTINUED ON SHEET C-3

MATCH LINE PREVIOUS SHEET

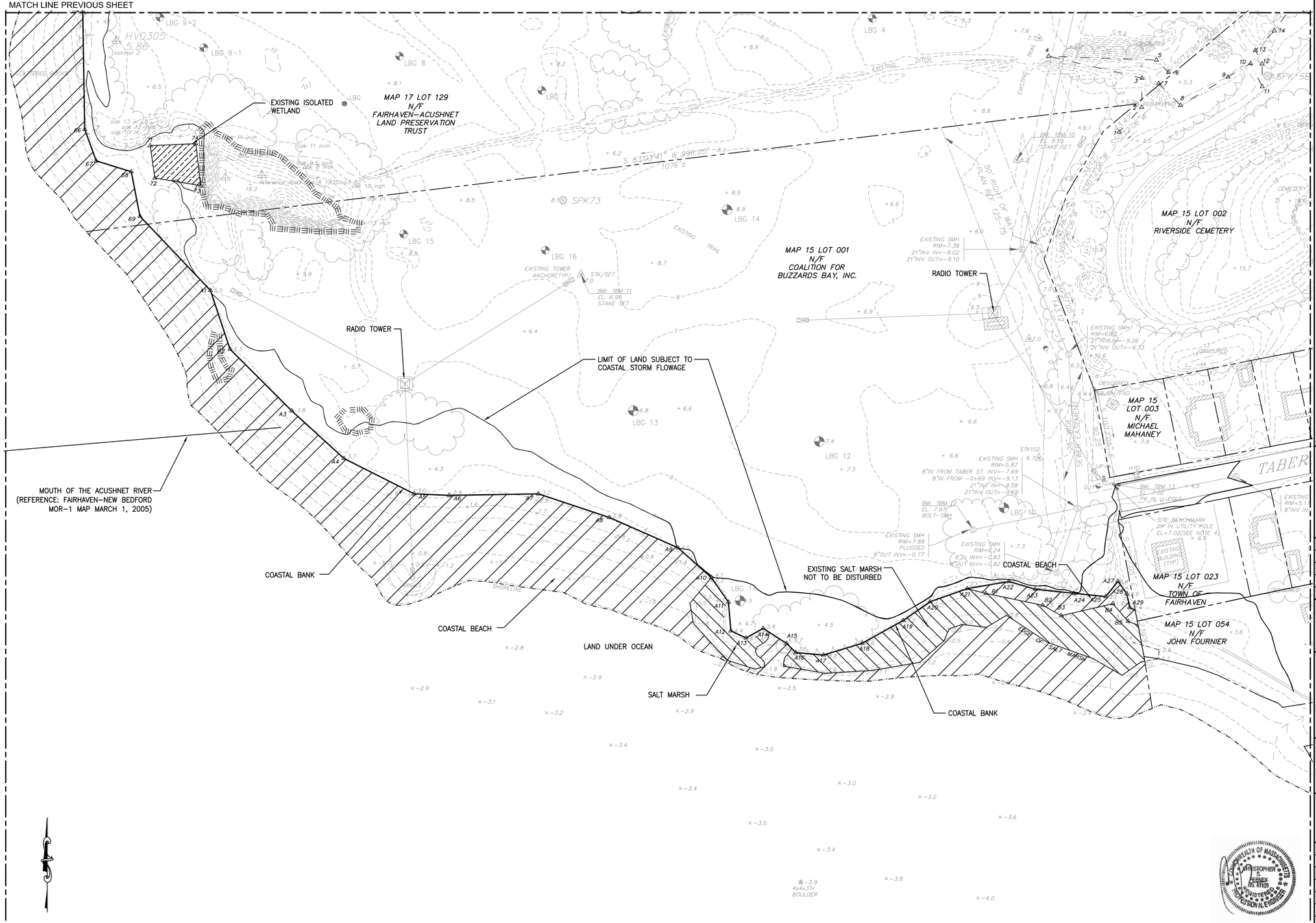

NOTE:

1. RESOURCE AREA DELINEATION PERFORMED BY THE LOUIS BERGER GROUP INC., AND APPROVED BY THE FAIRHAVEN CONSERVATION COMMISSION, 2004.

LIST OF ABBUTTERS

PLAT	LOT	ADDRESS	OWNER
15	002	TABER STREET	RIVERSIDE CEMETERY
15	003	2 TABER STREET	MICHAEL MAHANEY
15	023	TABER STREET	TOWN OF FAIRHAVEN
15	054	2 HEDGE STREET	JOHN FOURNIER
15	001	1 MARSH ISLAND	COALITION FOR BUZZARDS BAY, INC.
17	129	2 MARSH ISLAND	FAIRHAVEN-ACUSHNET LAND PRESERVATION TRUST

50 25 0 50 100

SCALE IN FEET

THE Louis Berger Group, INC.
ENGINEERS • PLANNERS
SCIENTISTS • ECONOMISTS
MANCHESTER, NH (603) 644-5200
NEEDHAM, MA (781) 444-3330
PROVIDENCE, RI (401) 521-5980

REV.	DESCRIPTION	DATE

NOT FOR CONSTRUCTION

National Oceanic and Atmospheric Administration - Restoration Center

55 GREAT REPUBLIC DRIVE
GLOUCESTER, MA 01930

MARSH ISLAND
SALT MARSH RESTORATION
FAIRHAVEN, MASSACHUSETTS

SHEET TITLE: EXISTING CONDITIONS PLAN (2 OF 2)

SCALE:	AS SHOWN	DATE:	JUNE 2012
PROJECT MANAGER:	CAW		
PROJECT ENGINEER:	CF		
CHECKED BY:	CC	SHEET No.	C-4
DRAWN BY:	CL		
JOB NUMBER:	JI1822		

Jun 12, 2012 - 4:33pm F:\PROJECT\1822_NOAA_Marsh Island\DRAWINGS\FINAL DESIGN\CAD DRAWINGS\CIVIL\Existing-CondSions.dwg

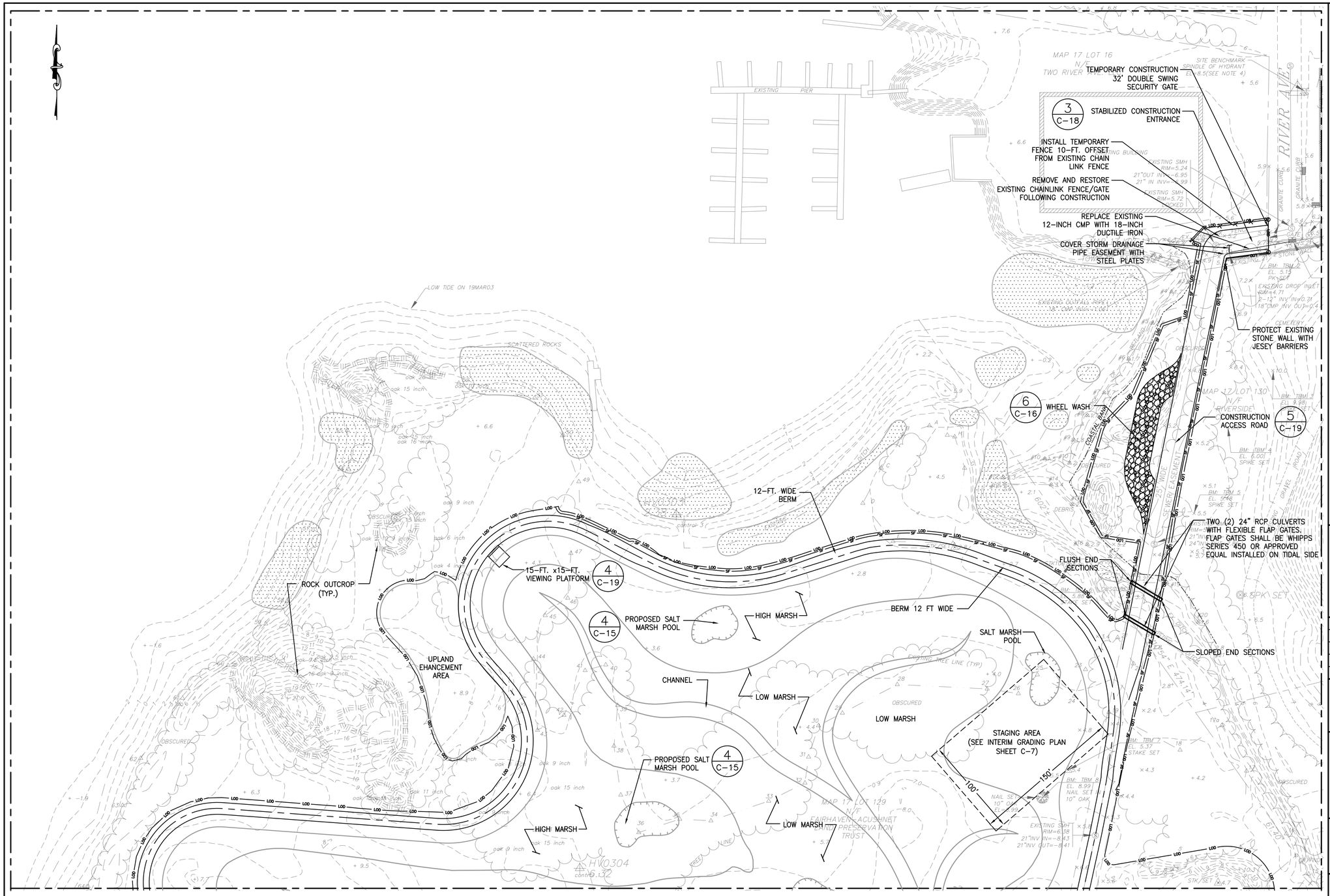

CONTINUED ON SHEET C-6

LEGEND

LOD	LIMIT OF DISTURBANCE
SF	SILT FENCE

NOTES:

1. FOR GENERAL CONSTRUCTION SEQUENCE SEE SHEET C-1.
2. CONTRACTOR SHALL NOT EXCAVATE WITHIN RADIO ANTENNA ANCHOR AREAS DENOTED BY LIMIT OF DISTURBANCE LINES.
3. DUST SUPPRESSION SHALL BE EMPLOYED THROUGHOUT THE DURATION OF THE PROJECT OR AS DIRECTED BY THE COTR.
4. THE CONTRACTOR SHALL KEEP RIVER AVENUE OPEN AT ALL TIMES DURING CONSTRUCTION. ACCESS TO MARINA AND ADJACENT CEMETERY SHALL BE MAINTAINED AT ALL TIMES.
5. CONTRACTOR SHALL MONITOR DMPS WEEKLY ON THE EIGHT SMHS LOCATED WITHIN THE PROJECT LIMTS.
6. CONTRACTOR SHALL COORDINATE WORK ON SANITARY SEWER WITH FAIRHAVEN BPW.
7. MUTCD 2009 SIGN W9-6 "TRUCK CROSSING" SHALL BE INSTALLED AT CONSTRUCTION ENTRANCES.
8. STREET SWEEPING SHALL OCCUR DAILY OR AS DIRECTED BY THE COTR.

50 25 0 50 100

SCALE IN FEET

THE Louis Berger Group, INC.
ENGINEERS • PLANNERS
SCIENTISTS • ECONOMISTS
MANCHESTER, NH (603) 644-5200
NEEDHAM, MA (781) 444-3330
PROVIDENCE, RI (401) 521-5980

REV.	DESCRIPTION	DATE

NOT FOR CONSTRUCTION

National Oceanic and Atmospheric Administration - Restoration Center
55 GREAT REPUBLIC DRIVE
GLOUCESTER, MA 01930

MARSH ISLAND SALT MARSH RESTORATION

FAIRHAVEN, MASSACHUSETTS

SITE PREPARATION & EROSION CONTROL PLAN (1 OF 2)

SHEET TITLE:

SCALE:	AS SHOWN	DATE:	JUNE 2012
PROJECT MANAGER:	CAW		
PROJECT ENGINEER:	CF		
CHECKED BY:	CC	SHEET No.	C-5
DRAWN BY:	CL		
JOB NUMBER:	JI1822		

Jun 13, 2012 - 10:03am F:\PROJECT\1822_NOAA_Marsh Island\DRAWINGS\FINAL DESIGN\CAD DRAWINGS\CIVIL\Site Prep_Ero-Plan.dwg

CONTINUED ON SHEET C-5

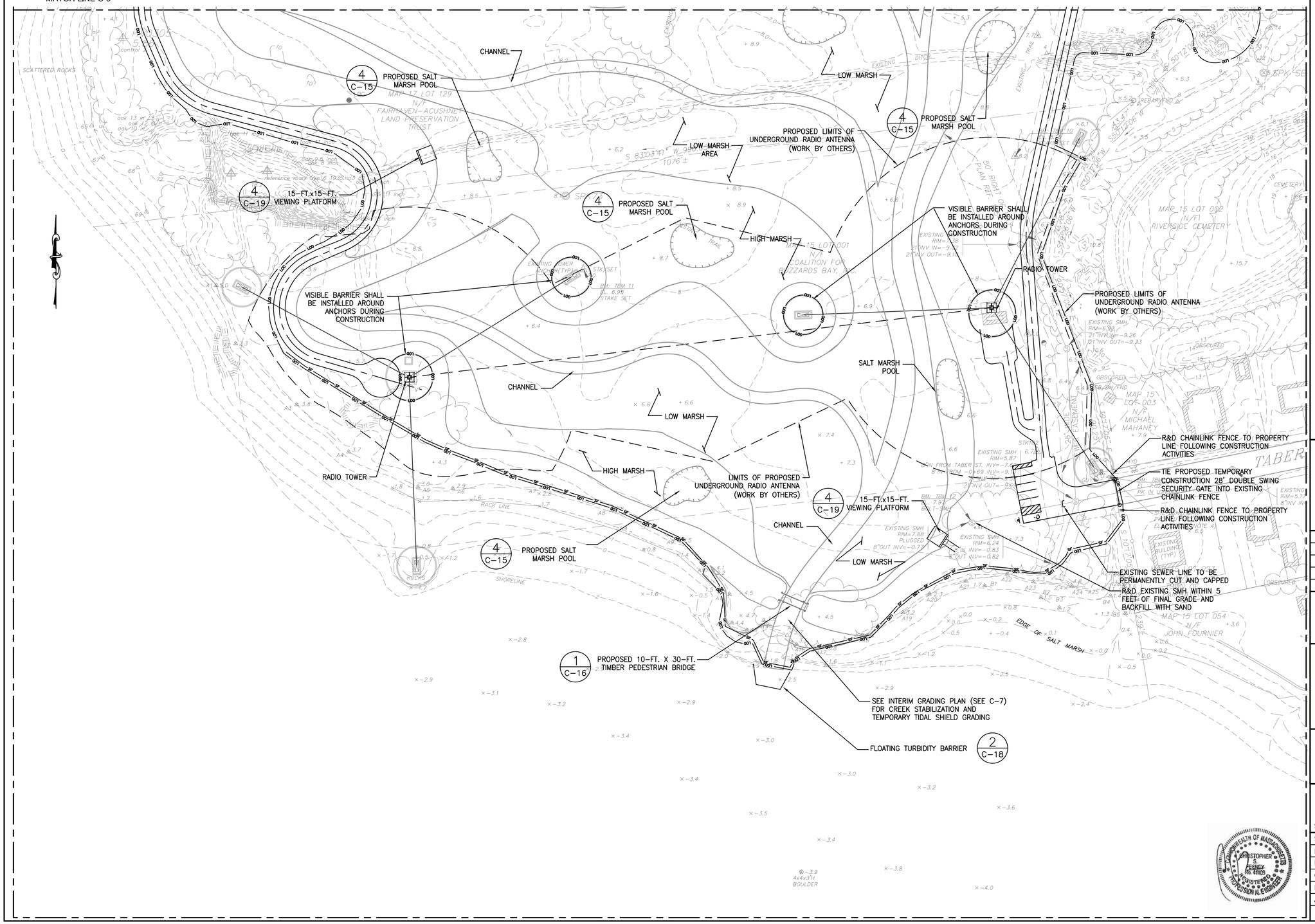

LEGEND

LOD — LIMIT OF DISTURBANCE

SF — SILT FENCE

NOTES:

1. FOR GENERAL CONSTRUCTION SEQUENCE SEE SHEET C-1.
2. CONTRACTOR SHALL NOT EXCAVATE WITHIN RADIO ANTENNA ANCHOR AREAS DENOTED BY LIMIT OF DISTURBANCE LINES.
3. DUST SUPPRESSION SHALL BE EMPLOYED THROUGHOUT THE DURATION OF THE PROJECT OR AS DIRECTED BY THE COTR.
4. THE CONTRACTOR SHALL KEEP RIVER AVENUE OPEN AT ALL TIMES DURING CONSTRUCTION. ACCESS TO MARINA AND ADJACENT CEMETERY SHALL BE MAINTAINED AT ALL TIMES.
5. CONTRACTOR SHALL MONITOR DMPS WEEKLY ON THE EIGHT SMHS LOCATED WITHIN THE PROJECT LIMTS.
6. CONTRACTOR SHALL COORDINATE WORK ON SANITARY SEWER WITH FAIRHAVEN BPW.
7. MUTCD 2009 SIGN W9-6 "TRUCK CROSSING" SHALL BE INSTALLED AT CONSTRUCTION ENTRANCES.
8. STREET SWEEPING SHALL OCCUR DAILY OR AS DIRECTED BY THE COTR.

50 25 0 50 100

SCALE IN FEET

THE Louis Berger Group, INC.
ENGINEERS • PLANNERS
SCIENTISTS • ECONOMISTS
MANCHESTER, NH (603) 644-5200
NEEDHAM, MA (781) 444-3330
PROVIDENCE, RI (401) 521-5980

REV.	DESCRIPTION	DATE

NOT FOR CONSTRUCTION

National Oceanic and Atmospheric Administration - Restoration Center

55 GREAT REPUBLIC DRIVE
GLOUCESTER, MA 01930

MARSH ISLAND SALT MARSH RESTORATION

FAIRHAVEN, MASSACHUSETTS

SITE PREPARATION & EROSION CONTROL PLAN

SHEET TITLE: (2 OF 2)

SCALE:	AS SHOWN	DATE:	JUNE 2012
PROJECT MANAGER:	CAW		
PROJECT ENGINEER:	CF		
CHECKED BY:	CC	SHEET No.	C-6
DRAWN BY:	CL		
JOB NUMBER:	JI1822		

Jun 13, 2012 - 10:06am F:\PROJECT\1822_NOAA_Marsh Island\DRAWINGS\FINAL DESIGN\CAD DRAWINGS\CIVIL\Site Prep_Ero-Plan.dwg

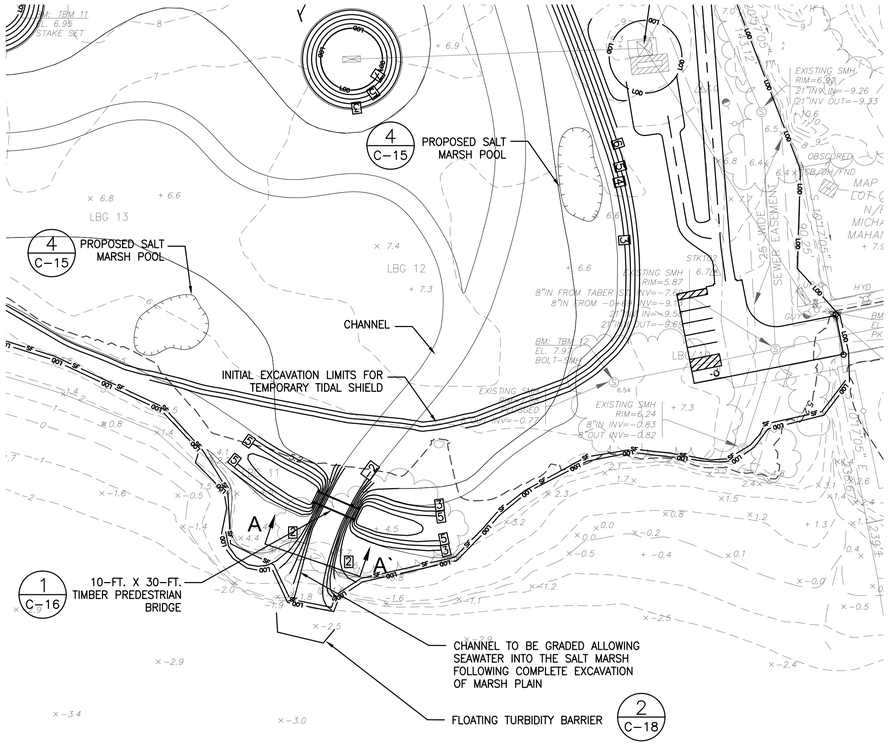

TEMPORARY TIDAL SHIELD GRADING

50 25 0 50 100

SCALE IN FEET

NOTES:

1. THE PURPOSE OF THE PROPOSED TIDAL SHIELD GRADING IS TO SHOW THE RECOMMENDED APPROACH TO CONTROL TIDAL FORCES AND PROTECT WORK DURING CONSTRUCTION.
2. STAGING AREA AND ACCESS ROAD SHALL BE CONSTRUCTED PRIOR TO GRADING SHOWN ON "TEMPORARY TIDAL SHIELD GRADING."
3. EXCAVATION SHOWN ON "TEMPORARY TIDAL SHIELD GRADING" SHALL BE COMPLETED PRIOR TO CONSTRUCTION OF BERM AND PEDESTRIAN BRIDGE.
4. INLET CHANNEL SHALL BE STABILIZED FROM THE LIMITS OF DISTURBANCE TO THE INTERIOR AS SHOWN ON PLANTING PLANS PER C-12 AND C-13.
5. CONTRACTOR SHALL EMPLOY NECESSARY DEWATERING MEASURES TO COMPLETE GRADING OF TIDAL CHANNEL INLET.
6. CONTRACTOR SHALL CONSULT APPLICABLE TIDE CHARTS TO COMPLETE PROPOSED WORK.
7. TIDAL CHANNEL INLET EXCAVATION AND GRADING SHALL OCCUR FOLLOWING ALL WORK WITHIN THE PROPOSED SALT MARSH PLAIN.

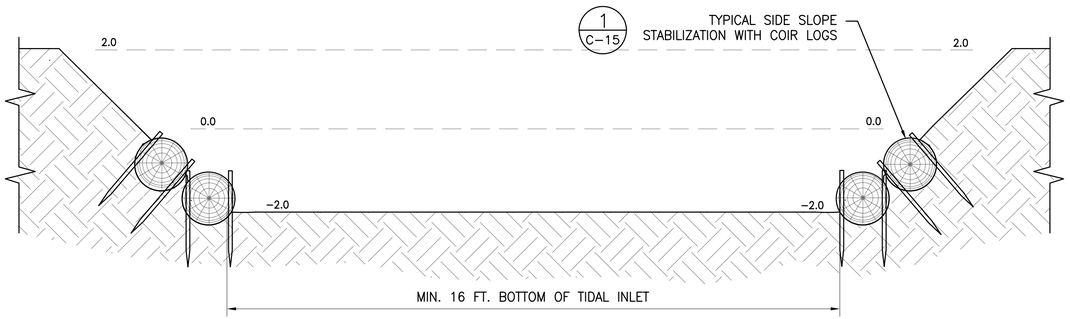

TYPICAL TIDAL INLET CROSS SECTION A-A'

NOT TO SCALE

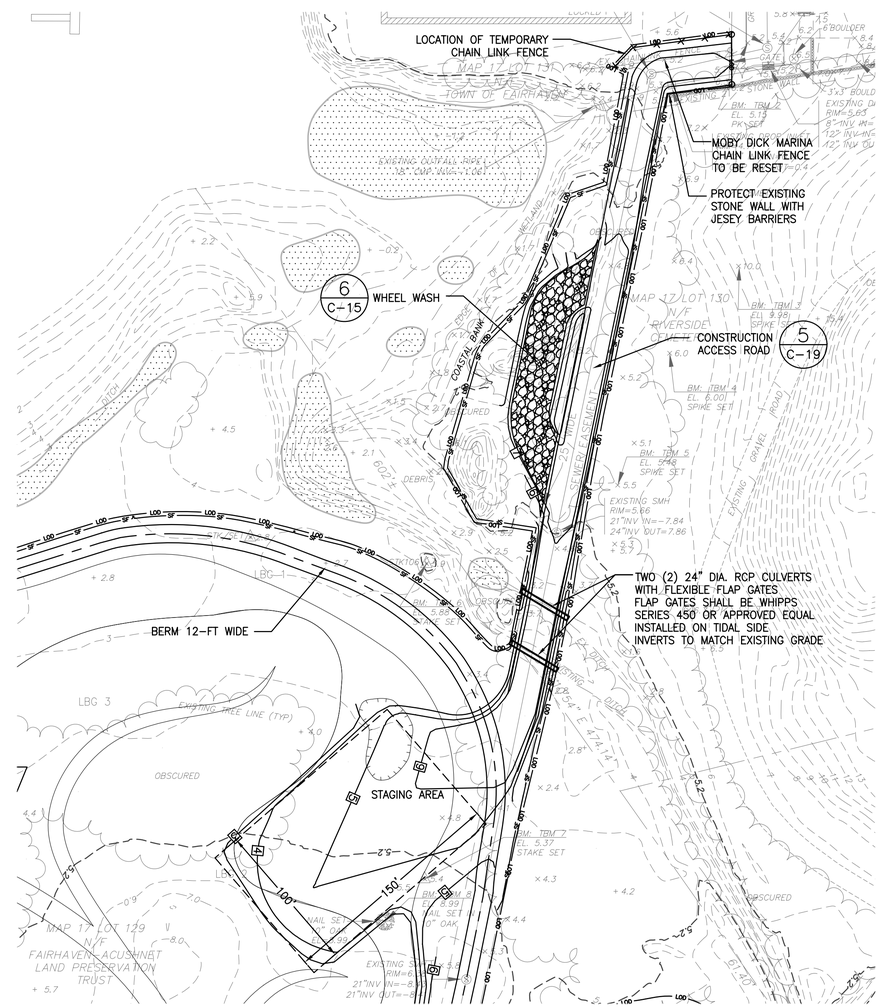

CONSTRUCTION ACCESS ROAD AND STAGING AREA GRADING

50 25 0 50 100

SCALE IN FEET

LEGEND

LOD — LIMIT OF DISTURBANCE

SF — SILT FENCE

NOTES:

1. FOR GENERAL CONSTRUCTION SEQUENCE SEE SHEET C-1.
2. CONTRACTOR SHALL NOT EXCAVATE WITHIN RADIO ANTENNA ANCHOR AREAS DENOTED BY LIMIT OF DISTURBANCE LINES.
3. DUST SUPPRESSION SHALL BE EMPLOYED THROUGHOUT THE DURATION OF THE PROJECT OR AS DIRECTED BY THE COTR.
4. THE CONTRACTOR SHALL KEEP RIVER AVENUE OPEN AT ALL TIMES DURING CONSTRUCTION. ACCESS TO MARINA AND ADJACENT CEMETERY SHALL BE MAINTAINED AT ALL TIMES.
5. CONTRACTOR SHALL MONITOR DMPS WEEKLY ON THE EIGHT SMHS LOCATED WITHIN THE PROJECT LIMTS.
6. CONTRACTOR SHALL COORDINATE WORK ON SANITARY SEWER WITH FAIRHAVEN BPW.

THE Louis Berger Group, INC.
ENGINEERS • PLANNERS
SCIENTISTS • ECONOMISTS
MANCHESTER, NH (603) 644-5200
NEEDHAM, MA (781) 444-3330
PROVIDENCE, RI (401) 521-5980

REV.	DESCRIPTION	DATE

NOT FOR CONSTRUCTION

National Oceanic and Atmospheric Administration - Restoration Center
55 GREAT REPUBLIC DRIVE
GLOUCESTER, MA 01930

MARSH ISLAND
SALT MARSH RESTORATION
FAIRHAVEN, MASSACHUSETTS

INTERIM GRADING PLAN

SHEET TITLE:

SCALE:	AS SHOWN	DATE:	JUNE 2012
PROJECT MANAGER:	CAW		
PROJECT ENGINEER:	CF		
CHECKED BY:	CC	SHEET No.	C-7
DRAWN BY:	CL		
JOB NUMBER:	JI1822		

COMMONWEALTH OF MASSACHUSETTS CHRISTOPHER S. FERNEY No. 41109 REGISTERED PROFESSIONAL ENGINEER

Jun 12, 2012 – 4:43pm F:\PROJECT\1822_NOAA_Marsh Island\DRAWINGS\FINAL DESIGN\CAD DRAWINGS\CIVIL\Interim-Grading-Plan.dwg

CONTINUED ON SHEET C-9

LOD — LIMIT OF DISTURBANCE

SF — SILT FENCE

6-FOOT CHAIN LINK FENCE

TIMBER GUARDRAIL

ADA COMPLIANT WALKING TRAIL

RESOURCE AREA IMPACT SUMMARY

WETLAND TYPE	AREA (SQUARE FEET) OR LENGTH (LINEAR FEET)	
	PERMANENT	TEMPORARY
BVW	73,826 S.F.	911 S.F.
SALT MARSH	26,386 S.F.	1,820 S.F.
COASTAL BANK	40 L.F.	30 L.F.
COASTAL BEACH	0	1,175 S.F.
LAND SUBJECT TO COASTAL STORM FLOWAGE*	14,342 S.F.	2,970 S.F.
	*398,722 S.F. (9.1 AC) NET-STORAGE GAIN	
RIVERFRONT AREA (DISTURBED)	174,850 S.F.	31,950 S.F.

NOTES:

1. ALL AREAS SHALL BE GRADED WITHIN THE PROPOSED SALT MARSH TO PROMOTE POSITIVE DRAINAGE.
2. AREAS TO BE STABILIZED WITH COIR LOGS ARE AS SHOWN ON THE PLANTING PLAN FOR CLARITY.

50 25 0 50 100

SCALE IN FEET

THE Louis Berger Group, INC.
ENGINEERS • PLANNERS
SCIENTISTS • ECONOMISTS
MANCHESTER, NH (603) 644-5200
NEEDHAM, MA (781) 444-3330
PROVIDENCE, RI (401) 521-5980

REV.	DESCRIPTION	DATE

NOT FOR CONSTRUCTION

National Oceanic and Atmospheric Administration - Restoration Center

55 GREAT REPUBLIC DRIVE
GLOUCESTER, MA 01930

MARSH ISLAND SALT MARSH RESTORATION

FAIRHAVEN, MASSACHUSETTS

SHEET TITLE: FINAL GRADING PLAN (1 OF 2)

SCALE:	1"=50'	DATE:	JUNE 2012
PROJECT MANAGER:	CAW		
PROJECT ENGINEER:	CF		
CHECKED BY:	CC	SHEET No.	C-8
DRAWN BY:	CL		
JOB NUMBER:	JI1822		

Jun 12, 2012 - 4:37pm F:\PROJECT\1822_NOAA_Marsh Island\DRAWINGS\FINAL DESIGN\CAD DRAWINGS\CIVIL\Grading-Plan.dwg

MATCH LINE C-8

CONTINUED ON SHEET C-8

CHANNEL
PROPOSED SALT MARSH POOL (4/C-15)
LOW MARSH
15-FT.x15-FT. VIEWING PLATFORM (4/C-19)
LOW MARSH AREA
COIR LOG TIDAL CHANNEL BANK STABILIZATION (2/C-15)
HIGH MARSH
PERIMETER ACCESS ROAD (2/C-19)
RADIO TOWER
PROPOSED TIMBER GUARDRAIL (5/C-15)
LIMITS TO ADA COMPLIANT WALKING PATH (4" STONE DUST)
COIR LOG STABILIZATION (1/C-15)
SEE BRIDGE SLOPE REINFORCEMENT INSET
TIMBER PEDESTRIAN BRIDGE (30-FT. SPAN APPROX.) (1/C-16)
DEBRIS AND LITTER TO BE REMOVED AND DISPOSED
6-FT. CHAIN LINK FENCE BLACK VINYL COATED (1/C-17)
RAISE AND RESET EXISTING SANITARY MANHOLE TO PROPOSED GRADE
PARKING LOT PAVEMENT (4/C-17)
GRAVEL ACCESS ROAD (4/C-17)
REMOVABLE BOLLARDS (5/C-17)
PARKING LOT SURFACE (4/C-17)
PROPOSED BOLLARD TO PROHIBIT VEHICULAR TRAFFIC (2/C-16)
R&D EXISTING FENCE REPLACE WITH 24-FT. PIPE GATE (6/C-17)
PROPOSED BOLLARDS FIELD ADJUST TO PROHIBIT VEHICULAR TRAFFIC (2/C-16)
EXISTING SEWER LINE TO BE PERMANENTLY CUT AND CAPPED
GUARDRAIL TO TERMINATE TO PROVIDE A 4-FOOT PEDESTRIAN OPENING EACH SIDE
SIGN FOR ADA VAN ACCESSIBLE PARKING (8/C-17)
MAP 15 LOT 001 N/F COALITION FOR BIZZARDS BAY, INC.
MAP 15 LOT 003 N/F MICHAEL
RIVERSIDE CEMETERY
TABER

BRIDGE SLOPE REINFORCEMENT

24-INCH MIN. DEPTH RIP RAP STONE
TIMBER PEDESTRIAN BRIDGE (30-FT. SPAN APPROX.) (1/C-16)
COIR LOGS (2/C-15)

20 10 0 20 40
SCALE IN FEET

LOD — LIMIT OF DISTURBANCE
SF — SILT FENCE
6-FOOT CHAIN LINK FENCE
TIMBER GUARDRAIL
ADA COMPLIANT WALKING TRAIL

RESOURCE AREA IMPACT SUMMARY

WETLAND TYPE	AREA (SQUARE FEET) OR LENGTH (LINEAR FEET)	
	PERMANENT	TEMPORARY
BVW	73,826 S.F.	911 S.F.
SALT MARSH	26,386 S.F.	1,820 S.F.
COASTAL BANK	40 L.F.	30 L.F.
COASTAL BEACH	0	1,175 S.F.
LAND SUBJECT TO COASTAL STORM FLOWAGE*	14,342 S.F.	2,970 S.F.
	*398,722 S.F. (9.1 AC) NET-STORAGE GAIN	
RIVERFRONT AREA (DISTURBED)	174,850 S.F.	31,950 S.F.

NOTES:
1. ALL AREAS EXCEPT POOLS SHALL BE GRADED WITHIN THE PROPOSED SALT MARSH TO PROMOTE POSITIVE DRAINAGE.
2. AREAS TO BE STABILIZED WITH COIR LOGS ARE AS SHOWN ON THIS PLAN AND PLANTING PLAN FOR CLARITY.
3. TIDAL INLET FROM RIPRAP STABILIZED AREA TO L.O.D SHALL BE STABILIZED WITH COIR LOGS.

50 25 0 50 100
SCALE IN FEET

THE Louis Berger Group, INC.
ENGINEERS • PLANNERS
SCIENTISTS • ECONOMISTS
MANCHESTER, NH (603) 644-5200
NEEDHAM, MA (781) 444-3330
PROVIDENCE, RI (401) 521-5980

REV.	DESCRIPTION	DATE

NOT FOR CONSTRUCTION

National Oceanic and Atmospheric Administration - Restoration Center
55 GREAT REPUBLIC DRIVE
GLOUCESTER, MA 01930

MARSH ISLAND SALT MARSH RESTORATION
FAIRHAVEN, MASSACHUSETTS

FINAL GRADING PLAN (2 OF 2)

SHEET TITLE:

SCALE:	AS SHOWN	DATE:	JUNE 2012
PROJECT MANAGER:	CAW		
PROJECT ENGINEER:	CF		
CHECKED BY:	CC	SHEET No.	C-9
DRAWN BY:	CL		
JOB NUMBER:	JI1822		

Jun 12, 2012 – 4:41pm F:\PROJECT\1822_NOAA_Marsh Island\DRAWINGS\FINAL DESIGN\CAD DRAWINGS\CIVIL\Grading-Plan.dwg

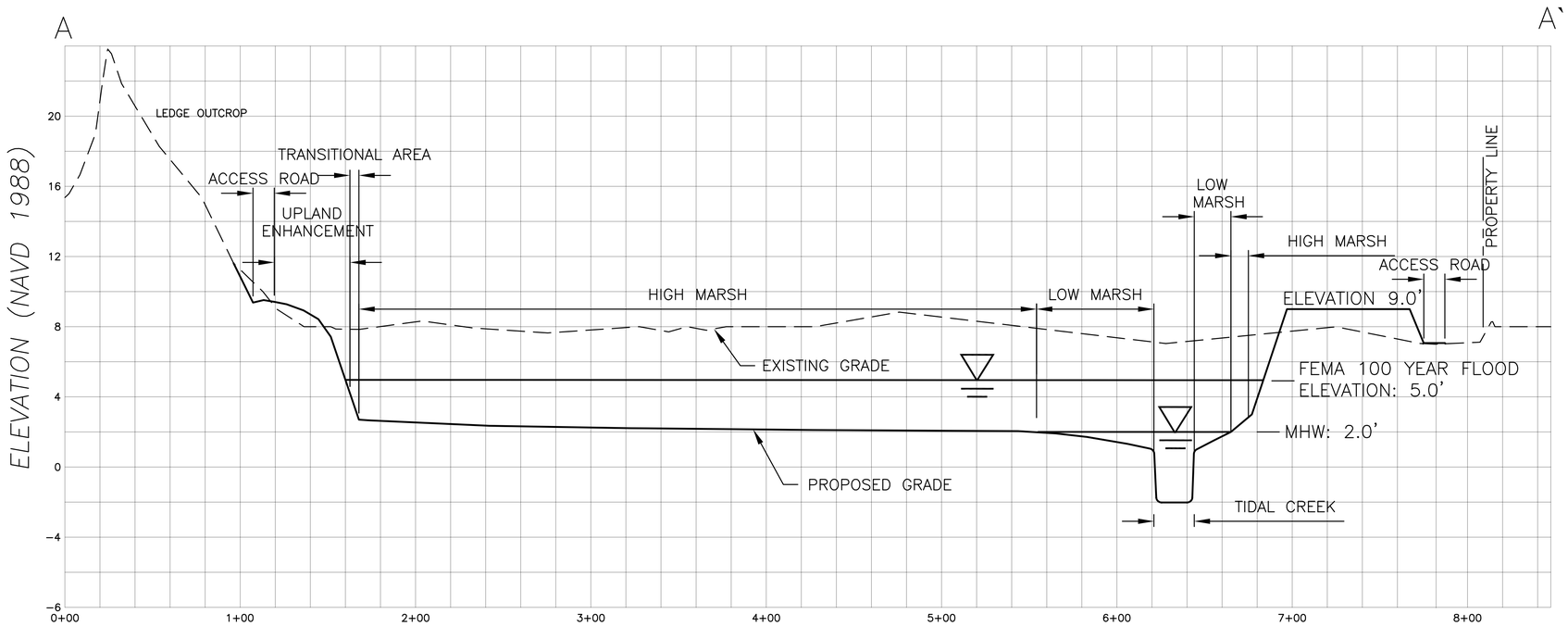

CROSS SECTION A-A`

NOTE:
ELEVATIONS ON THIS PLAN RELATE TO NAVD 1988.

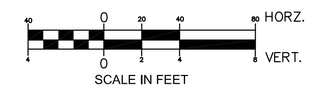

THE Louis Berger Group, INC.
ENGINEERS • PLANNERS
SCIENTISTS • ECONOMISTS
MANCHESTER, NH (603) 644-5200
NEEDHAM, MA (781) 444-3330
PROVIDENCE, RI (401) 521-5980

REV.	DESCRIPTION	DATE

NOT FOR CONSTRUCTION

National Oceanic and Atmospheric Administration - Restoration Center
55 GREAT REPUBLIC DRIVE
GLOUCESTER, MA 01930

MARSH ISLAND
SALT MARSH RESTORATION
FAIRHAVEN, MASSACHUSETTS

CROSS SECTION A-A

SHEET TITLE:

SCALE:	AS SHOWN	DATE:	JUNE 2012
PROJECT MANAGER:	CAW		
PROJECT ENGINEER:	CF		
CHECKED BY:	CC	SHEET No.	C-10
DRAWN BY:	CL		
JOB NUMBER:	JI1822		

Jun 12, 2012 - 4:18pm F:\PROJECT\1822_NOAA_Marsh Island\DRAWINGS\FINAL DESIGN\CAD DRAWINGS\DWG\Cross-Sections.dwg

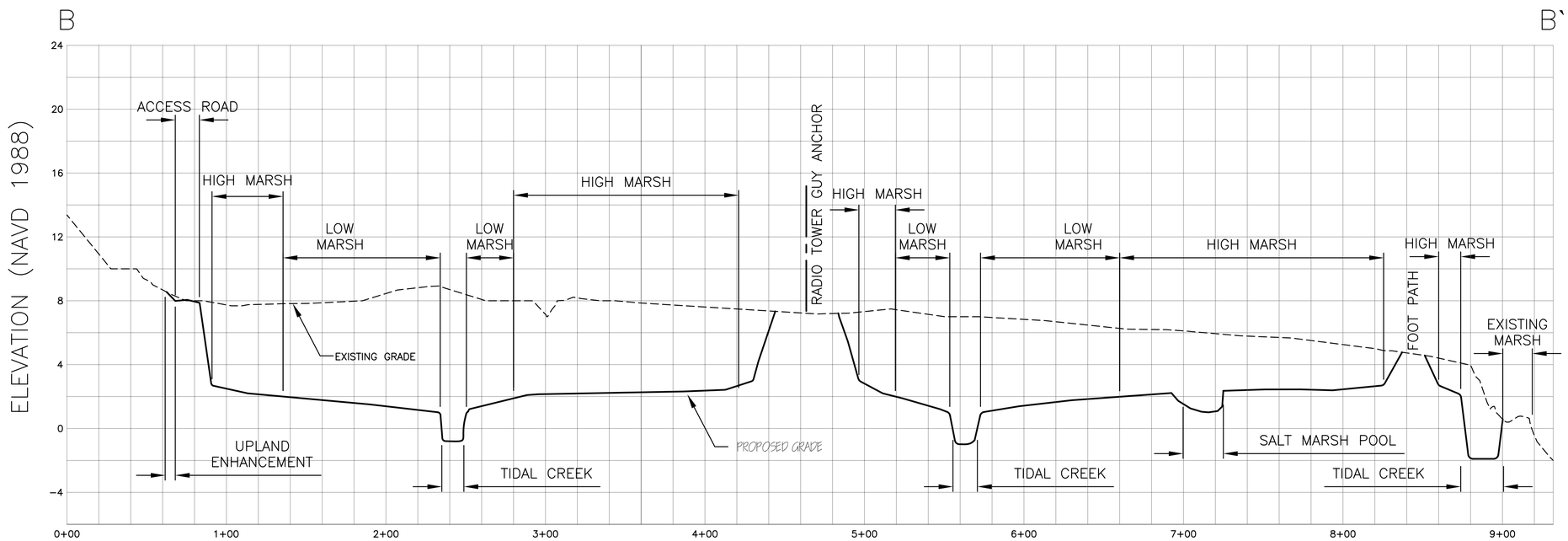

CROSS SECTION B-B`

NOTE:
ELEVATIONS ON THIS PLAN RELATE TO NAVD 1988.

40 0 20 40 80 HORZ.
4 0 2 4 8 VERT.
SCALE IN FEET

THE Louis Berger Group, INC.
ENGINEERS • PLANNERS
SCIENTISTS • ECONOMISTS
MANCHESTER, NH (603) 644-5200
NEEDHAM, MA (781) 444-3330
PROVIDENCE, RI (401) 521-5980

REV.	DESCRIPTION	DATE

NOT FOR CONSTRUCTION

National Oceanic and Atmospheric Administration - Restoration Center
55 GREAT REPUBLIC DRIVE
GLOUCESTER, MA 01930

MARSH ISLAND
SALT MARSH RESTORATION
FAIRHAVEN, MASSACHUSETTS

CROSS SECTION B-B

SHEET TITLE:

SCALE:	AS SHOIWN	DATE:	JUNE 2012
PROJECT MANAGER:	CAW		
PROJECT ENGINEER:	CF		
CHECKED BY:	CC	SHEET No.	C-11
DRAWN BY:	CL		
JOB NUMBER:	JI1822		

Jun 12, 2012 – 4:19pm F:\PROJECT\1822_NOAA_Marsh Island\DRAWINGS\FINAL DESIGN\CAD DRAWINGS\CIVIL\Cross-Sections.dwg

PLANTING NOTES

EMERGENT PLANTINGS - PLUGS : LOW MARSH AND HIGH MARSH

1. NO AREA SHALL BE PLANTED UNTIL FINAL GRADE IS COMPLETED, AREA HAS BEEN CLEARED OF PHRAGMITES, WRACK, AND OTHER DEBRIS. COMPLETION OF CLEARING SHALL BE APPROVED BY COTR PRIOR TO PLANTING. ALL AREAS PLANTED SHALL BE PROTECTED BY HERBIVORY FENCING AT THE END OF EACH PLANTING DAY. SEE DETAIL 3 ON SHEET C–15.
2. REMOVAL OF PHRAGMITES SHALL BE PERFORMED IN ACCORDANCE WITH PHRAGMITES REMOVAL PLAN, SHEET C–1
3. THE CONTRACTOR SHALL INCORPORATE TWO INCHES (2") OF A FINE GRAIN MINERAL SOIL AMENDMENT IN THE UPPER HORIZON OF THE SALT MARSH PLAIN, PER DIRECTION OF COTR.
4. LOW MARSH PLANTINGS (SPARTINA ALTERNIFLORA 2–INCH PLUGS) SHALL BE PLANTED ON 2–FOOT CENTERS, AT A DENSITY OF 12,632 PLANTS PER ACRE. LOW MARSH PLANTINGS SHALL TYPICALLY BE INSTALLED BETWEEN ELEVATIONS 1.0–2.0 (NAVD 88). HIGH MARSH PLANTINGS (SPARTINA PATENS AND DISTICHLIS SPICATA 2–INCH PLUGS) SHALL BE PLANTED ON 2–FOOT CENTERS, AT A TOTAL DENSITY OF 12,632 PLANTS PER ACRE. HIGH MARSH PLANTINGS SHALL TYPICALLY BE INSTALLED BETWEEN ELEVATIONS 2.0 TO 2.7 (NAVD 88). THE PLANTING WINDOW IS FROM APRIL 1 TO JUNE 15.
5. THE PLUGS SHALL BE PLANTED IN THE SOIL NO MORE THAN ONE INCH (1") DEEPER THAN GROWN IN THE NURSERY AND TO A DEPTH THAT WILL ENSURE THAT THE TOP OF THE ROOTSTOCK MASS LIES NO MORE THAN ONE INCH (1") BELOW THE SOIL SURFACE.
6. PRIOR TO PLACEMENT OF THE PLANT IN THE PLANTING HOLE, FERTILIZER SHALL BE PLACED IN THE BOTTOM OF THE PLANTING HOLE (OSMOCOTE 18–6–12) AT THE RATE OF THIRTY (30) GRAMS PER PLANT. THE PLANTS SHALL THEN BE PLACED AT THE APPROPRIATE DEPTH WITH THE ROOT SYSTEM ORIENTED DOWNWARD. WHILE THE PLANT IS IN THIS POSITION, THE SOIL PROFILE OR SECTION SHALL BE FULLY AND FIRMLY CLOSED. IF A SOIL DEPRESSION IS FORMED ABOVE OR IMMEDIATELY ADJACENT TO THE PLANTING LOCATION, ENOUGH SOIL SHALL BE SLOUGHED FROM THE SURROUNDING AREA AND FIRMLY TAMPED INTO THE DEPRESSION TO LEAVE THE PLANTING AREA AT THE SAME ELEVATION AS THE SURROUNDING SOIL OR SLIGHTLY HIGHER.
7. REMAINING STANDS OF PHRAGMITES SHALL BE TREATED WITH HERBICIDE FOLLOWING FINAL PHASE OF PLANTING AND AS NECESSARY AS TO PREVENT FUTURE GROWTH. ALL WORK SHALL BE PER PHRAGMITES REMOVAL PLAN, SHEET C–1

TRANSITION AREAS AND DISTURBED UPLANDS

PHRAGMITES REMOVAL:

1. WHEN APPLICABLE, REMOVAL OF PHRAGMITES SHALL BE PERFORMED IN ACCORDANCE WITH PHRAGMITES REMOVAL PLAN, SHEET C–1.

WARM SEASON GRASSLAND/WILDFLOWER SEEDING:

1. THE WARM SEASON GRASSLAND/WILDFLOWER NATIVE SEED MIXTURE SHALL BE AS SHOWN IN THE TABLE AND SEEDED AT A RATE OF 15 BULK POUNDS PER ACRE. WARM SEASON SEEDING SHALL OCCUR AFTER MARCH 15 AND BEFORE JUNE 1.
2. THE SEEDED AREA SHALL BE LOAMED WITH A MINIMUM DEPTH OF FOUR INCHES (4") AND FIRMED TO FORM A GOOD SEED BED. UNLESS HYDROSEEDED, THE SEEDED AREA SHALL BE DRAGGED WITH A CHAIN OR TINE HARROW AND FIRMED TO ENSURE GOOD SOIL TO SEED CONTACT.
3. NITROGEN FERTILIZER SHALL NOT BE APPLIED AT THE TIME OF THE SEEDING.
4. LIMESTONE SHALL BE APPLIED AT A RATE OF 1–TON PER ACRE (50 LBS./1,000 S.F.). SEED MAY BE BROADCAST, DROP–SEEDED OR HYDROSEEDED. THE SEED MIX SHALL BE MULCHED AT THE RATE OF 4,000 POUNDS OF STRAW MULCH PER ACRE. IF THE SEED IS PLACED BY HYDROSEEDER, HYDROMULCH MAY BE USED. THE MULCH SHALL BE BOUND IN PLACE WITH AN APPROVED BINDER.
5. ALL DISTURBED AREAS NOT SPECIFICALLY CALLED OUT FOR SEEDING SHALL BE RESTORED IN ACCORDANCE WITH WARM SEASON GRASSLAND/WILDFLOWER SEEDING.

TRANSITIONAL AREA WOODY SHRUB PLANTINGS

1. THE TRANSITION AREAS BETWEEN EL. 2.7 TO 3.0 (NAVD 88), SHALL BE PLANTED WITH SALT TOLERANT SPECIES AS SHOWN IN THE TABLE WITHIN LIKE SPECIES CLUSTERS AS SHOWN ON PLANTING PLAN AND SPACED AT 5–FOOT ON CENTER. THE PLANTING WINDOW IS APRIL 1 TO MAY 15.
2. ALL SHRUBS SHALL CONFORM TO THE MATERIAL SPECIFICATION REQUIREMENTS OF THE AMERICAN STANDARD FOR NURSERY STOCK (1986 OR LATER EDITION).
3. PLANT PITS SHALL BE DUG APPROXIMATELY FOUR INCHES (4") WIDER THAN THE STOCK SIZE. PRIOR TO PLACEMENT OF THE PLANT IN THE PLANTING HOLE, A 20–GRAM FERTILIZER AGRIFORM TABLET (20–10–5 ANALYSIS) SHALL BE PLACED IN THE BOTTOM OF THE PLANTING HOLE. BACKFILL SOIL MATERIALS SHALL BE THE SAME AS EXCAVATED FOR THE PLANTING PITS.

DISTURBED WOODY SHRUB PLANTINGS

1. THE DISTURBED UPLAND AREAS, ABOVE EL. 3.0 (NAVD 88), SHALL BE PLANTED WITH WOODY SHRUBS AS SHOWN IN THE TABLE WITHIN LIKE SPECIES CLUSTERS AS SHOWN ON THE PLANTING PLAN AND SPACED AT 5–FOOT ON CENTER. THE PLANTING WINDOW IS APRIL 1 TO MAY 15. PLANTING SHALL ONLY OCCUR WHEN THE SALT LEVEL OF THE SOIL MEASURES LESS THAN 1.0 MMHOS/CM.
2. ALL SHRUBS SHALL CONFORM TO THE MATERIAL SPECIFICATION REQUIREMENTS OF THE AMERICAN STANDARD FOR NURSERY STOCK (1986 OR LATER EDITION).
3. PLANT PITS SHALL BE DUG APPROXIMATELY FOUR INCHES (4") WIDER THAN THE STOCK SIZE. PRIOR TO PLACEMENT OF THE PLANT IN THE PLANTING HOLE, A 20–GRAM FERTILIZER AGRIFORM TABLET (20–10–5 ANALYSIS) SHALL BE PLACED IN THE BOTTOM OF THE PLANTING HOLE. BACKFILL SOIL MATERIALS SHALL BE THE SAME AS EXCAVATED FOR THE PLANTING PITS.

PLANTING LEGEND

- LOW MARSH PLANTING ELEVATION 1.0–2.0 6.6 ACRES PROJECT TOTAL
- HIGH MARSH PLANTING ELEVATION: 2.0–2.7 4.5 ACRES PROJECT TOTAL
- TRANSITION AREAS ELEVATION: 2.7–3.0 0.12 ACRES PROJECT TOTAL
- DISTURBED UPLANDS ELEVATION: ABOVE 3.0 2.75 ACRES PROJECT TOTAL
- AMERICAN BEACH GRASS (Ammophila breviligulata) 0.06 ACRES PROJECT TOTAL
- LIMITS OF COIR LOG STABILIZATION

50 25 0 50 100

SCALE IN FEET

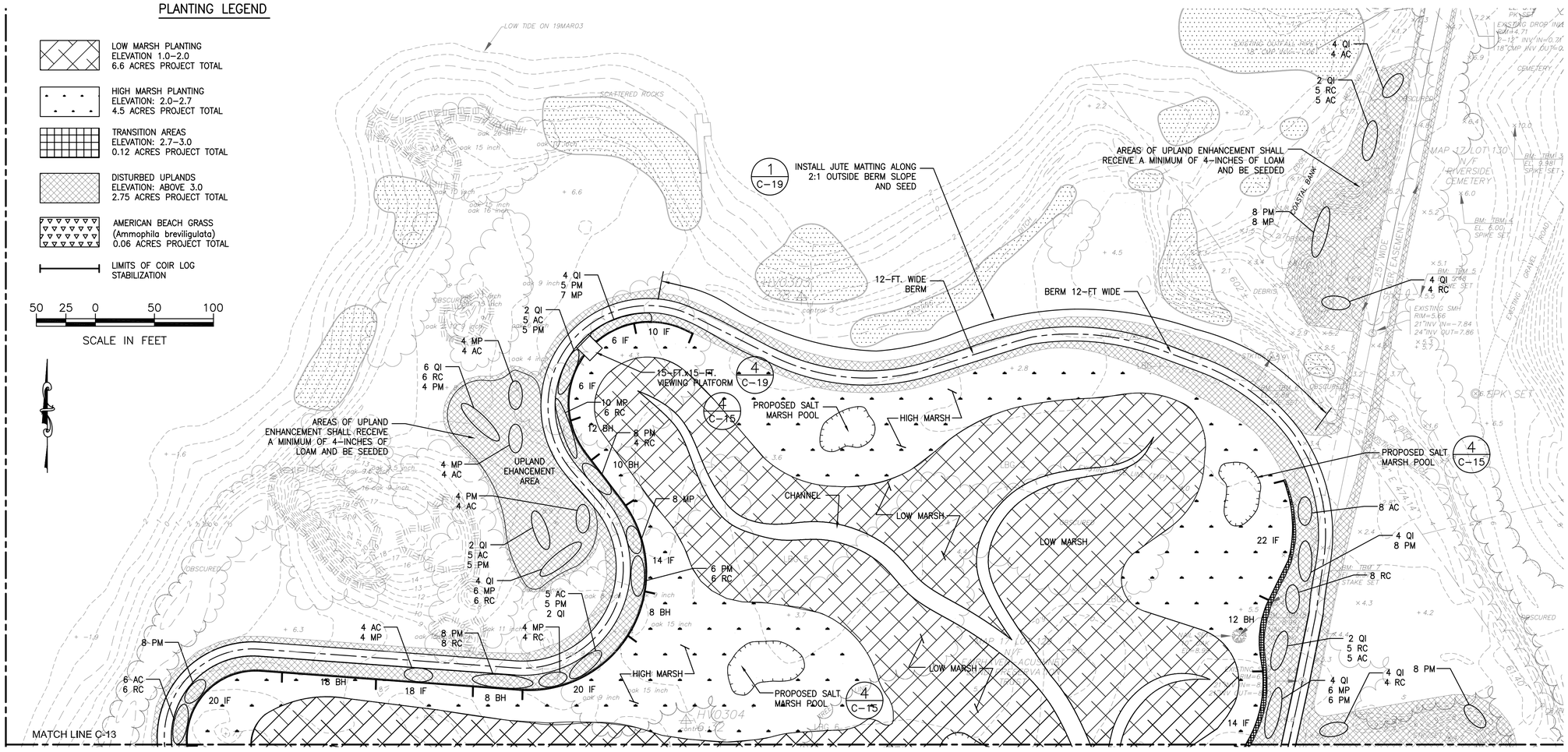

CONTINUED ON SHEET C-13

WOODY SHRUB PLANTINGS[1]				
SYMBOL	COMMON NAME	SCIENTIFIC NAME	CONT. SIZE (GAL)	QUANTITY
AC	Shadbush	*Amelanchier canadensis*	#2	133
MP	Northern Bayberry	*Myrica pensylvanica*	#2	155
PM	Beach Plum	*Prunus maritima*	#2	154
QI	Scrub Oak	*Quercus ilicifolia*	#2	76
RC	Winged Sumac	*Rhus copallina*	#1	148

SALT TOLERANT SPECIES[1]				
SYMBOL	COMMON NAME	SCIENTIFIC NAME	CONT. SIZE (GAL)	QUANTITY
IF	High–tide Bush	*Iva frutescens*	#1	308
BH	Groundsel Tree	*Baccharis halimifolia*	#1	242

WARM SEASON GRASSLAND/WILDFLOWER SEED MIXTURE[2]		
COMMON NAME	SCIENTIFIC NAME	PROPORTION
Little Bluestem	*Schizachyrium scoparium*	45
Switchgrass	*Panicum virgatum*	20
Wild Indigo	*Baptisia tinctoria*	3
Butterfly Milkweed	*Asclepias tuberosa*	12
Heath Aster	*Symphyotrichum pilosum*	15
Round Head Lespedeza	*Lespedeza capitata*	5
		100

RATE: [1] PLANTED AND SPACED AT 5–FOOT ON CENTER
[2] SEEDED AT A RATE OF 15 BULK POUNDS PER ACRE

THE Louis Berger Group, INC.
ENGINEERS • PLANNERS
SCIENTISTS • ECONOMISTS
MANCHESTER, NH (603) 644–5200
NEEDHAM, MA (781) 444–3330
PROVIDENCE, RI (401) 521–5980

REV.	DESCRIPTION	DATE

NOT FOR CONSTRUCTION

National Oceanic and Atmospheric Administration - Restoration Center
55 GREAT REPUBLIC DRIVE
GLOUCESTER, MA 01930

MARSH ISLAND
SALT MARSH RESTORATION
FAIRHAVEN, MASSACHUSETTS

PLANTING PLAN
(1 OF 2)

SHEET TITLE:			
SCALE:	AS SHOWN	DATE:	JUNE 2012
PROJECT MANAGER:	CAW		
PROJECT ENGINEER:	CF		
CHECKED BY:	CC	SHEET No.	C-12
DRAWN BY:	CL		
JOB NUMBER:	JI1822		

Jun 13, 2012 – 10:08am F:\PROJECT\1822_NOAA_Marsh Island\DRAWINGS\FINAL DESIGN\CAD DRAWINGS\CIVIL\Planting-Plan.dwg

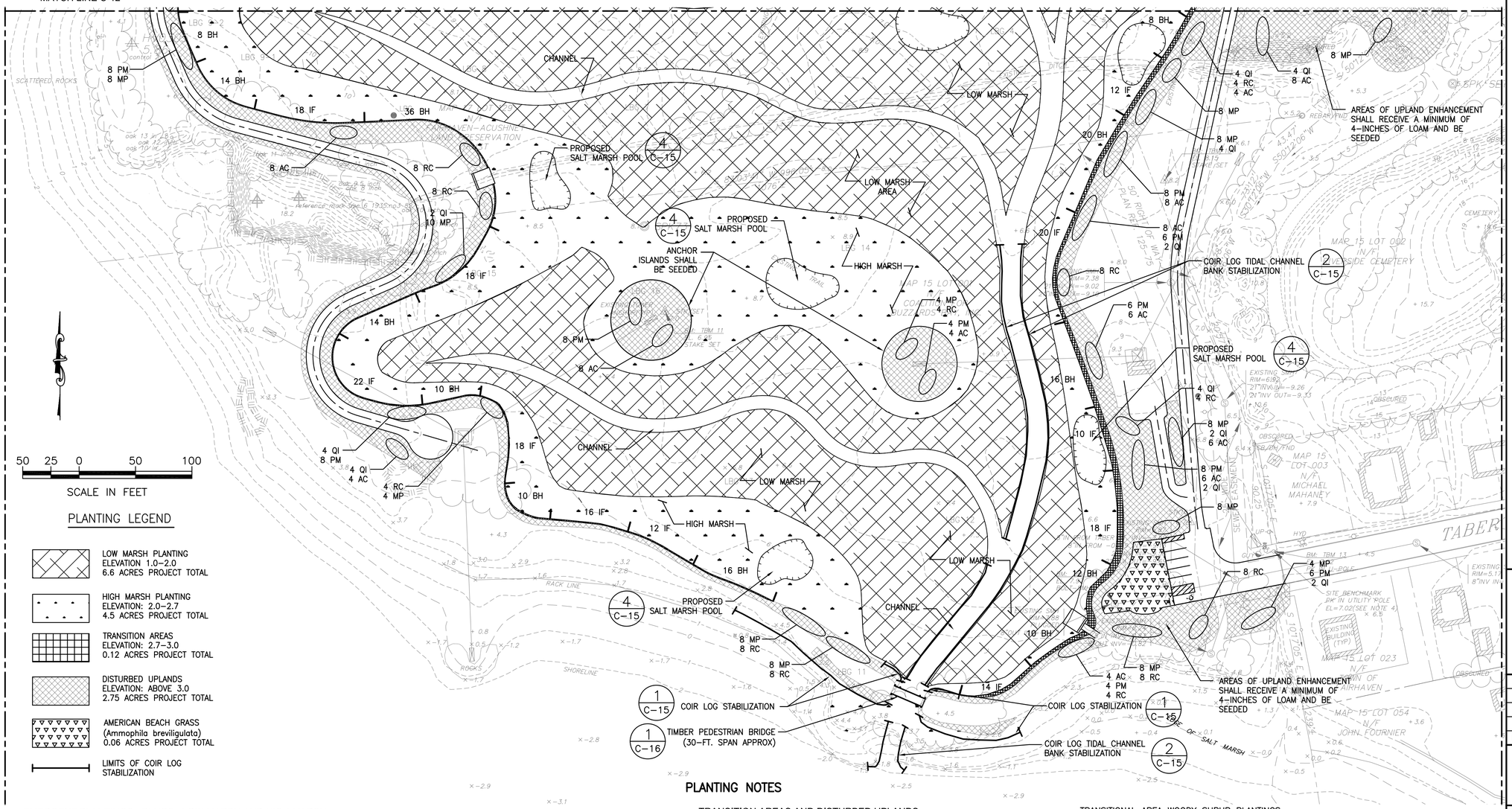

PLANTING LEGEND

- LOW MARSH PLANTING ELEVATION 1.0–2.0 6.6 ACRES PROJECT TOTAL
- HIGH MARSH PLANTING ELEVATION: 2.0–2.7 4.5 ACRES PROJECT TOTAL
- TRANSITION AREAS ELEVATION: 2.7–3.0 0.12 ACRES PROJECT TOTAL
- DISTURBED UPLANDS ELEVATION: ABOVE 3.0 2.75 ACRES PROJECT TOTAL
- AMERICAN BEACH GRASS (Ammophila breviligulata) 0.06 ACRES PROJECT TOTAL
- LIMITS OF COIR LOG STABILIZATION

PLANTING NOTES

EMERGENT PLANTINGS - PLUGS : LOW MARSH AND HIGH MARSH

1. NO AREA SHALL BE PLANTED UNTIL FINAL GRADE IS COMPLETED, AREA HAS BEEN CLEARED OF PHRAGMITES, WRACK, AND OTHER DEBRIS. COMPLETION OF CLEARING SHALL BE APPROVED BY COTR PRIOR TO PLANTING. ALL AREAS PLANTED SHALL BE PROTECTED BY HERBIVORY FENCING AT THE END OF EACH PLANTING DAY. SEE DETAIL 3 ON SHEET C–15.
2. REMOVAL OF PHRAGMITES SHALL BE PERFORMED IN ACCORDANCE WITH PHRAGMITES REMOVAL PLAN, SHEET C–1
3. THE CONTRACTOR SHALL INCORPORATE TWO INCHES (2") OF A FINE GRAIN MINERAL SOIL AMENDMENT IN THE UPPER HORIZON OF THE SALT MARSH PLAIN, PER DIRECTION OF COTR.
4. LOW MARSH PLANTINGS (SPARTINA ALTERNIFLORA 2–INCH PLUGS) SHALL BE PLANTED ON 2–FOOT CENTERS, AT A DENSITY OF 12,632 PLANTS PER ACRE. LOW MARSH PLANTINGS SHALL TYPICALLY BE INSTALLED BETWEEN ELEVATIONS 1.0–2.0 (NAVD 88). HIGH MARSH PLANTINGS (SPARTINA PATENS AND DISTICHLIS SPICATA 2–INCH PLUGS) SHALL BE PLANTED ON 2–FOOT CENTERS, AT A TOTAL DENSITY OF 12,632 PLANTS PER ACRE. HIGH MARSH PLANTINGS SHALL TYPICALLY BE INSTALLED BETWEEN ELEVATIONS 2.0 TO 2.7 (NAVD 88). THE PLANTING WINDOW IS FROM APRIL 1 TO JUNE 15.
5. THE PLUGS SHALL BE PLANTED IN THE SOIL NO MORE THAN ONE INCH (1") DEEPER THAN GROWN IN THE NURSERY AND TO A DEPTH THAT WILL ENSURE THAT THE TOP OF THE ROOTSTOCK MASS LIES NO MORE THAN ONE INCH (1") BELOW THE SOIL SURFACE.
6. PRIOR TO PLACEMENT OF THE PLANT IN THE PLANTING HOLE, FERTILIZER SHALL BE PLACED IN THE BOTTOM OF THE PLANTING HOLE (OSMOCOTE 18–6–12) AT THE RATE OF THIRTY (30) GRAMS PER PLANT. THE PLANTS SHALL THEN BE PLACED AT THE APPROPRIATE DEPTH WITH THE ROOT SYSTEM ORIENTED DOWNWARD. WHILE THE PLANT IS IN THIS POSITION, THE SOIL PROFILE OR SECTION SHALL BE FULLY AND FIRMLY CLOSED. IF A SOIL DEPRESSION IS FORMED ABOVE OR IMMEDIATELY ADJACENT TO THE PLANTING LOCATION, ENOUGH SOIL SHALL BE SLOUGHED FROM THE SURROUNDING AREA AND FIRMLY TAMPED INTO THE DEPRESSION TO LEAVE THE PLANTING AREA AT THE SAME ELEVATION AS THE SURROUNDING SOIL OR SLIGHTLY HIGHER.
7. REMAINING STANDS OF PHRAGMITES SHALL BE TREATED WITH HERBICIDE FOLLOWING FINAL PHASE OF PLANTING AND AS NECESSARY AS TO PREVENT FUTURE GROWTH. ALL WORK SHALL BE PER PHRAGMITES REMOVAL PLAN, SHEET C–1

TRANSITION AREAS AND DISTURBED UPLANDS

PHRAGMITES REMOVAL:

1. WHEN APPLICABLE, REMOVAL OF PHRAGMITES SHALL BE PERFORMED IN ACCORDANCE WITH PHRAGMITES REMOVAL PLAN, SHEET C–1.

WARM SEASON GRASSLAND/WILDFLOWER SEEDING:

1. THE WARM SEASON GRASSLAND/WILDFLOWER NATIVE SEED MIXTURE SHALL BE AS SHOWN IN THE TABLE AND SEEDED AT A RATE OF 15 BULK POUNDS PER ACRE. WARM SEASON SEEDING SHALL OCCUR AFTER MARCH 15 AND BEFORE JUNE 1.
2. THE SEEDED AREA SHALL BE LOAMED WITH A MINIMUM DEPTH OF FOUR INCHES (4") AND FIRMED TO FORM A GOOD SEED BED. UNLESS HYDROSEEDED, THE SEEDED AREA SHALL BE DRAGGED WITH A CHAIN OR TINE HARROW AND FIRMED TO ENSURE GOOD SOIL TO SEED CONTACT.
3. NITROGEN FERTILIZER SHALL NOT BE APPLIED AT THE TIME OF THE SEEDING.
4. LIMESTONE SHALL BE APPLIED AT A RATE OF 1–TON PER ACRE (50 LBS./1,000 S.F.). SEED MAY BE BROADCAST, DROP–SEEDED OR HYDROSEEDED. THE SEED MIX SHALL BE MULCHED AT THE RATE OF 4,000 POUNDS OF STRAW MULCH PER ACRE. IF THE SEED IS PLACED BY HYDROSEEDER, HYDROMULCH MAY BE USED. THE MULCH SHALL BE BOUND IN PLACE WITH AN APPROVED BINDER.
5. ALL DISTURBED AREAS NOT SPECIFICALLY CALLED OUT FOR SEEDING SHALL BE RESTORED IN ACCORDANCE WITH WARM SEASON GRASSLAND/WILDFLOWER SEEDING.

TRANSITIONAL AREA WOODY SHRUB PLANTINGS

1. THE TRANSITION AREAS BETWEEN EL. 2.7 TO 3.0 (NAVD 88), SHALL BE PLANTED WITH SALT TOLERANT SPECIES AS SHOWN IN THE TABLE WITHIN LIKE SPECIES CLUSTERS AS SHOWN ON PLANTING PLAN AND SPACED AT 5–FOOT ON CENTER. THE PLANTING WINDOW IS APRIL 1 TO MAY 15.
2. ALL SHRUBS SHALL CONFORM TO THE MATERIAL SPECIFICATION REQUIREMENTS OF THE AMERICAN STANDARD FOR NURSERY STOCK (1986 OR LATER EDITION).
3. PLANT PITS SHALL BE DUG APPROXIMATELY FOUR INCHES (4") WIDER THAN THE STOCK SIZE. PRIOR TO PLACEMENT OF THE PLANT IN THE PLANTING HOLE, A 20–GRAM FERTILIZER AGRIFORM TABLET (20–10–5 ANALYSIS) SHALL BE PLACED IN THE BOTTOM OF THE PLANTING HOLE. BACKFILL SOIL MATERIALS SHALL BE THE SAME AS EXCAVATED FOR THE PLANTING PITS.

DISTURBED WOODY SHRUB PLANTINGS

1. THE DISTURBED UPLAND AREAS, ABOVE EL. 3.0 (NAVD 88), SHALL BE PLANTED WITH WOODY SHRUBS AS SHOWN IN THE TABLE WITHIN LIKE SPECIES CLUSTERS AS SHOWN ON THE PLANTING PLAN AND SPACED AT 5–FOOT ON CENTER. THE PLANTING WINDOW IS APRIL 1 TO MAY 15. PLANTING SHALL ONLY OCCUR WHEN THE SALT LEVEL OF THE SOIL MEASURES LESS THAN 1.0 MMHOS/CM.
2. ALL SHRUBS SHALL CONFORM TO THE MATERIAL SPECIFICATION REQUIREMENTS OF THE AMERICAN STANDARD FOR NURSERY STOCK (1986 OR LATER EDITION).
3. PLANT PITS SHALL BE DUG APPROXIMATELY FOUR INCHES (4") WIDER THAN THE STOCK SIZE. PRIOR TO PLACEMENT OF THE PLANT IN THE PLANTING HOLE, A 20–GRAM FERTILIZER AGRIFORM TABLET (20–10–5 ANALYSIS) SHALL BE PLACED IN THE BOTTOM OF THE PLANTING HOLE. BACKFILL SOIL MATERIALS SHALL BE THE SAME AS EXCAVATED FOR THE PLANTING PITS.

COMMONWEALTH OF MASSACHUSETTS CHRISTOPHER S. CONLEY No. 41109 REGISTERED PROFESSIONAL ENGINEER

WOODY SHRUB PLANTINGS[1]				
SYMBOL	COMMON NAME	SCIENTIFIC NAME	CONT. SIZE (GAL)	QUANTITY
AC	Shadbush	*Amelanchier canadensis*	#2	133
MP	Northern Bayberry	*Myrica pensylvanica*	#2	155
PM	Beach Plum	*Prunus maritima*	#2	154
QI	Scrub Oak	*Quercus ilicifolia*	#2	76
RC	Winged Sumac	*Rhus copallina*	#1	148

SALT TOLERANT SPECIES[1]				
SYMBOL	COMMON NAME	SCIENTIFIC NAME	CONT. SIZE (GAL)	QUANTITY
IF	High–tide Bush	*Iva frutescens*	#1	308
BH	Groundsel Tree	*Baccharis halimifolia*	#1	242

WARM SEASON GRASSLAND/WILDFLOWER SEED MIXTURE[2]		
COMMON NAME	SCIENTIFIC NAME	PROPORTION
Little Bluestem	*Schizachyrium scoparium*	45
Switchgrass	*Panicum virgatum*	20
Wild Indigo	*Baptisia tinctoria*	3
Butterfly Milkweed	*Asclepias tuberosa*	12
Heath Aster	*Symphyotrichum pilosum*	15
Round Head Lespedeza	*Lespedeza capitata*	5
		100

RATE: [1] PLANTED AND SPACED AT 5–FOOT ON CENTER
[2] SEEDED AT A RATE OF 15 BULK POUNDS PER ACRE

THE Louis Berger Group, INC.
ENGINEERS • PLANNERS
SCIENTISTS • ECONOMISTS
MANCHESTER, NH (603) 644–5200
NEEDHAM, MA (781) 444–3330
PROVIDENCE, RI (401) 521–5980

REV.	DESCRIPTION	DATE

NOT FOR CONSTRUCTION

National Oceanic and Atmospheric Administration - Restoration Center
55 GREAT REPUBLIC DRIVE
GLOUCESTER, MA 01930

MARSH ISLAND
SALT MARSH RESTORATION
FAIRHAVEN, MASSACHUSETTS

SHEET TITLE: PLANTING PLAN (2 OF 2)

SCALE:	AS SHOWN	DATE:	JUNE 2012
PROJECT MANAGER:	CAW		
PROJECT ENGINEER:	CF		
CHECKED BY:	CC	SHEET No.	C-13
DRAWN BY:	CL		
JOB NUMBER:	JI1822		

Jun 13, 2012 – 10:10am F:\PROJECT\1822_NOAA_Marsh Island\DRAWINGS\FINAL DESIGN\CAD DRAWINGS\CIVIL\Planting-Plan.dwg

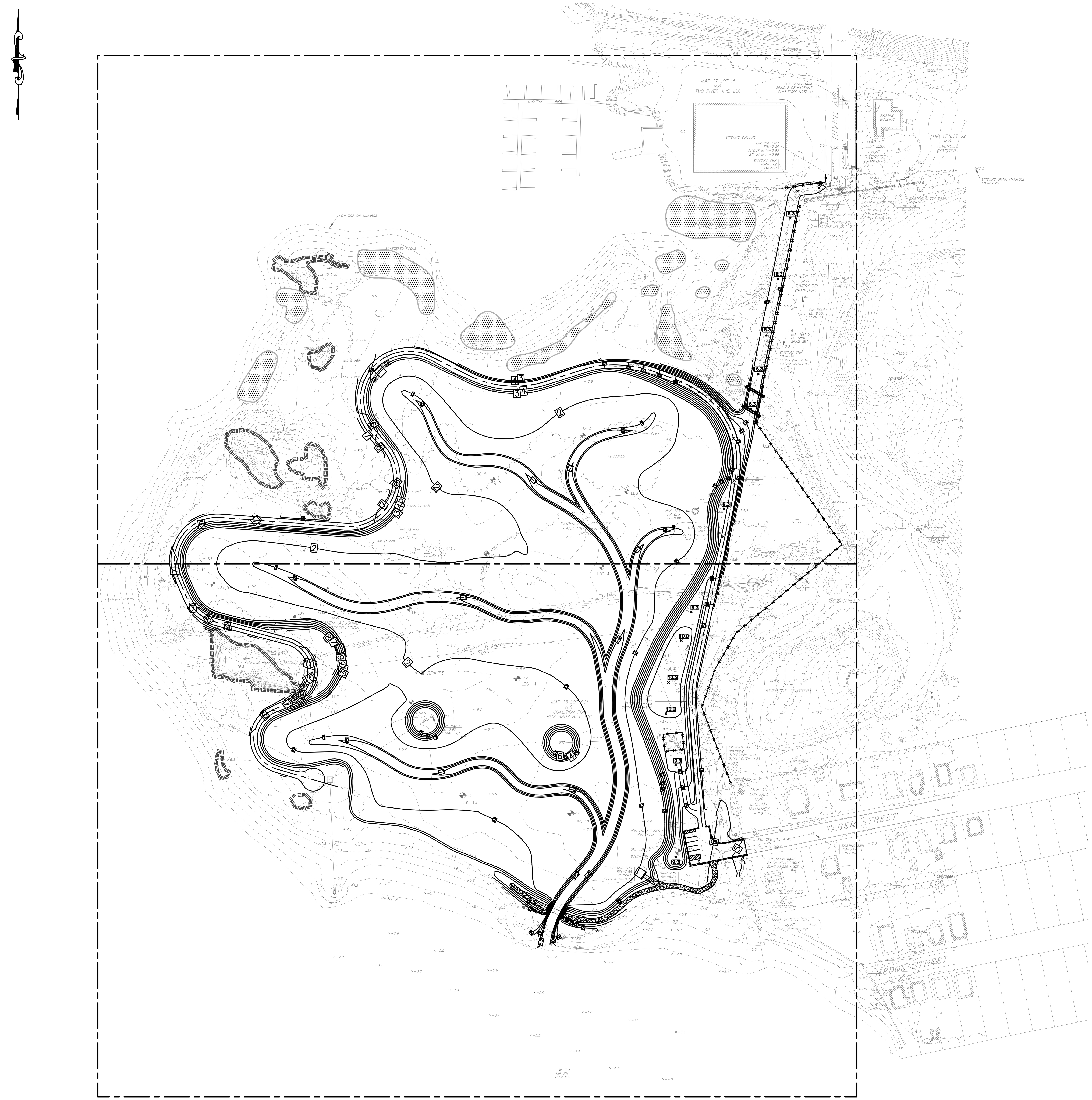

NOTE:
1. FOLLOWING SITE CONSTRUCTION ACTIVITIES, CONTRACTOR SHALL CONDUCT A 2–INCH MILL AND OVERLAY ON THE LENGTH OF RIVER AVENUE FROM THE INTERSECTION WITH THE RIGHT–OF–WAY WITH KENDRICK AVENUE TO THE INTERSTATE 195 OVERPASS.

100 50 0 100 200

SCALE IN FEET

THE Louis Berger Group, INC.
ENGINEERS • PLANNERS
SCIENTISTS • ECONOMISTS
MANCHESTER, NH (603) 644–5200
NEEDHAM, MA (781) 444–3330
PROVIDENCE, RI (401) 521–5980

REV.	DESCRIPTION	DATE

National Oceanic and Atmospheric Administration - Restoration Center
55 GREAT REPUBLIC DRIVE
GLOUCESTER, MA 01930

MARSH ISLAND
SALT MARSH RESTORATION
FAIRHAVEN, MASSACHUSETTS

SHEET TITLE: FINAL SITE OVERVIEW PLAN (1 OF 1)

SCALE:	AS SHOWN	DATE:	JUNE 2012
PROJECT MANAGER:	CAW		
PROJECT ENGINEER:	CF		
CHECKED BY:	CC	SHEET No.	C-14
DRAWN BY:	CL		
JOB NUMBER:	JI1822		

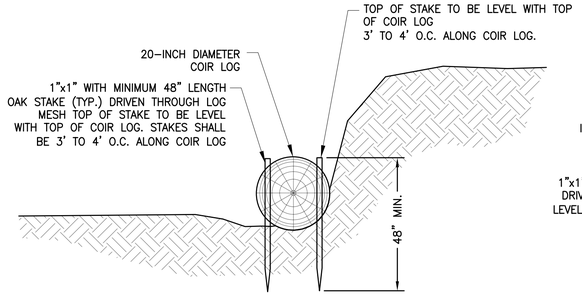

1 C-15 COIR LOG STABILIZATION

NTS

NOTES:

1. COIR LOGS SHALL BE 20-INCH IN DIAMETER AND UP TO 20' LONG. INNER MATERIAL SHALL BE COMPOSED OF 100% COCONUT FIBER. LOG SHALL BE WRAPPED IN BIODEGRADABLE TWINE.
2. A SINGLE COIR LOG IN HEIGHT SHALL BE USED TO STABILIZE SELECT NON-TIDAL CHANNEL AREAS AS SHOWN ON C-9.

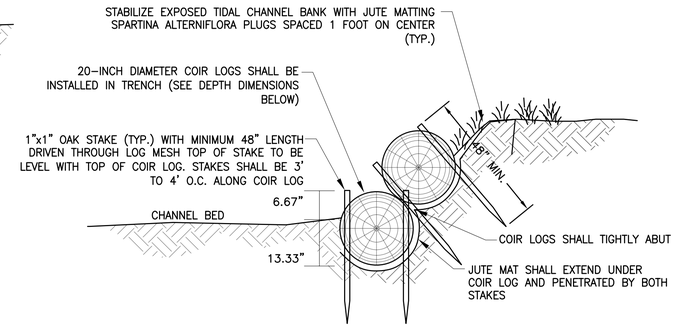

2 C-15 TIDAL CHANNEL BANK STABILIZATION DETAIL

NTS

NOTES:

1. COIR LOGS SHALL BE 20-INCH IN DIAMETER AND UP TO 20' LONG. INNER MATERIAL SHALL BE COMPOSED OF 100% COCONUT FIBER. LOG SHALL BE WRAPPED IN BIODEGRADABLE TWINE.
2. MULTIPLE COIR LOGS SHALL BE USED TO STABILIZE SELECT TIDAL CHANNEL BANK AREAS.

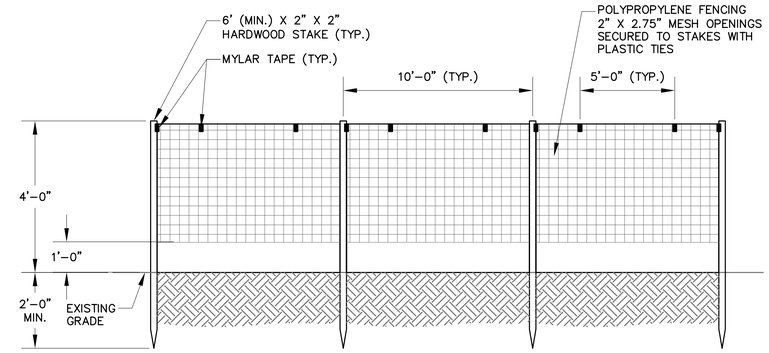

PROFILE

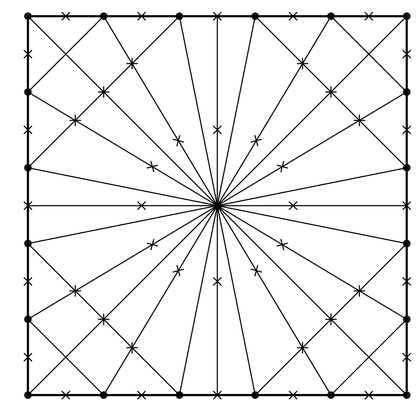

PLAN VIEW

NOTES:

1. MAX. 50'x50' GRID, TYPICAL. GRID MAY VARY, BASED ON SITE CONTOURS AND TIDAL CREEK LOCATIONS.
2. FENCE SHALL BE INSTALLED BY HAND.

3 C-15 HERBIVORY FENCE, TYPICAL

NTS

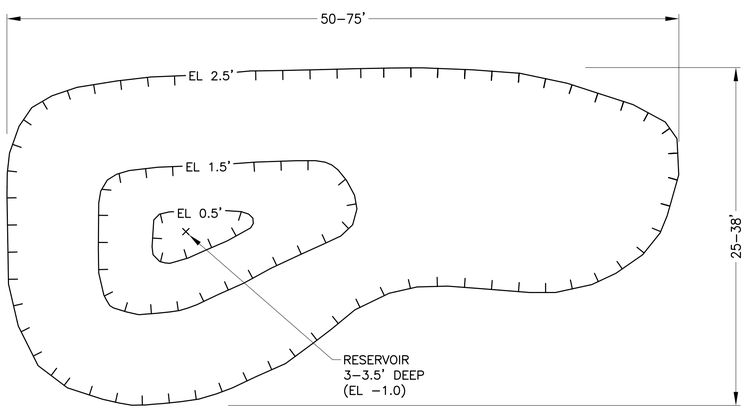

PLAN VIEW

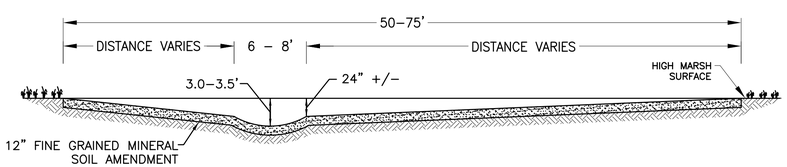

TYPICAL SECTION

4 C-15 TYPICAL SALT MARSH POOL

NTS

NOTES:

1. SALT MARSH POOLS TYPICALLY SHALL RANGE BETWEEN 1,250 SF AND 2,800 SF WITH A DEEPER RESERVOIR (3 TO 3.5 FT BELOW THE MARSH SURFACE). EXACT DEPTHS OF POOLS SHALL BE DIRECTED IN THE FIELD BY THE COTR.
2. THE EXACT LOCATION OF POOLS WILL BE DESIGNATED ON THE GROUND BY THE COTR, MAKING SUCH CHANGES AS MAY BE REQUIRED TO ADJUST FOR LOCAL FIELD CONDITIONS.
3. POOLS EXCAVATED WITHIN GRANULAR DREDGED MATERIAL SHALL BE OVER-EXCAVATED BY 12 INCHES AND REPLACED WITH 12 INCHES OF FINE GRAINED MINERAL SOIL AMENDMENT TO REDUCE PERMEABILITY.
4. TO INCREASE THE FREQUENCY OF TIDAL EXCHANGE WITHIN POOLS, SHALLOW CREEKS OR RADIAL DITCHES SHALL BE DESIGNED TO TERMINATE TYPICALLY 5 FT FROM THE POOL EDGE TO CREATE A SILL. THE TERMINUS OF THE SHALLOW CREEK/RADIAL DITCH SHALL TYPICALLY BE 2 INCHES BELOW THE MARSH SURFACE.

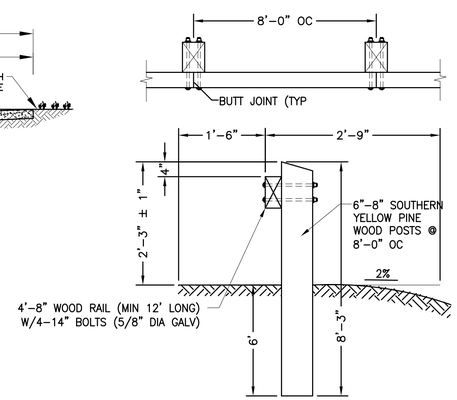

5 C-15 TIMBER GUARDRAIL DETAIL

NTS

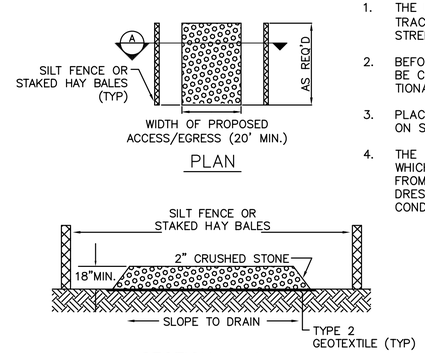

SECTION A-A

NOTES:

1. THE PURPOSE OF A WHEEL WASH STATION IS TO REDUCE THE TRACKING OR FLOWING OF SEDIMENT/DEBRIS ONTO LOCAL STREETS.
2. BEFORE INSTALLATION, THE AREA OF THE WHEEL WASH SHOULD BE CLEARED OF ALL VEGETATION, ROOTS AND OTHER OBJECTIONABLE MATERIAL TO THE DIMENSIONS SHOWN.
3. PLACE EITHER A WOVEN OR NONWOVEN CONSTRUCTION FABRIC ON SUBGRADE PRIOR TO GRAVEL PLACEMENT.
4. THE WHEEL WASH SHALL BE MAINTAINED IN A CONDITION WHICH WILL PREVENT TRACKING OR FLOWING OF SEDIMENT FROM THE PROPERTY LIMITS. THIS WILL REQUIRE PERIODIC TOP DRESSING WITH ADDITIONAL STONE OR ADDITIONAL LENGTH AS CONDITIONS DEMAND.

6 C-15 WHEEL WASH

NTS

THE Louis Berger Group, INC.
ENGINEERS • PLANNERS
SCIENTISTS • ECONOMISTS
MANCHESTER, NH (603) 644-5200
NEEDHAM, MA (781) 444-3330
PROVIDENCE, RI (401) 521-5980

REV.	DESCRIPTION	DATE

NOT FOR CONSTRUCTION

National Oceanic and Atmospheric Administration - Restoration Center

55 GREAT REPUBLIC DRIVE
GLOUCESTER, MA 01930

MARSH ISLAND
SALT MARSH RESTORATION
FAIRHAVEN, MASSACHUSETTS

CONSTRUCTION DETAILS 1

SHEET TITLE:

SCALE:	AS SHOWN	DATE:	JUNE 2012
PROJECT MANAGER:	CAW		
PROJECT ENGINEER:	CF		
CHECKED BY:	CC	SHEET No.	C-15
DRAWN BY:	CL		
JOB NUMBER:	JI1822		

Jun 12, 2012 - 4:21pm F:\PROJECT\1822_NOAA_Marsh Island\DRAWINGS\FINAL DESIGN\CAD DRAWINGS\CIVIL\Detail-Plan.dwg

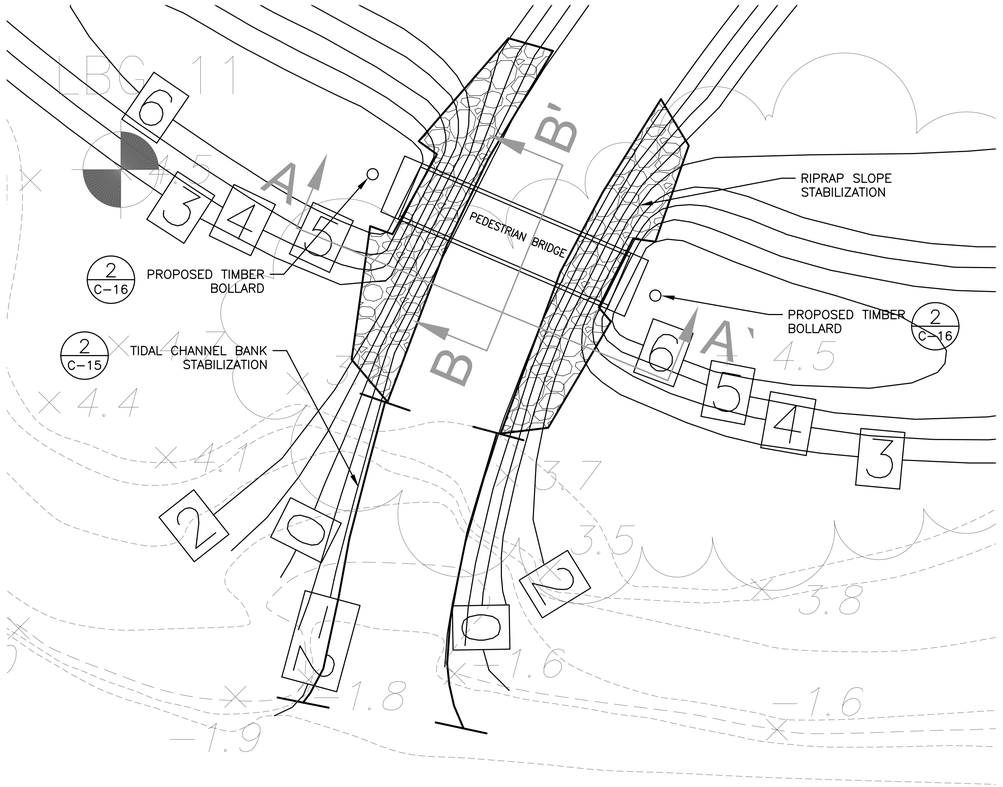

1 C-16 TIMBER PEDESTRIAN BRIDGE SITE PLAN

10 5 0 10 20

SCALE IN FEET

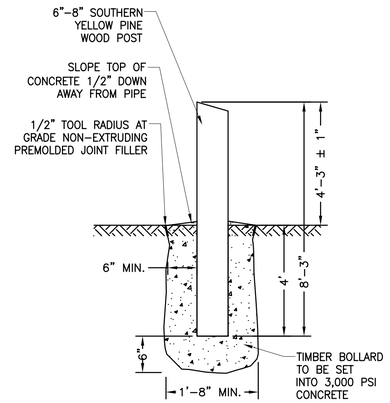

2 C-16 TIMBER BOLLARD DETAIL

NTS

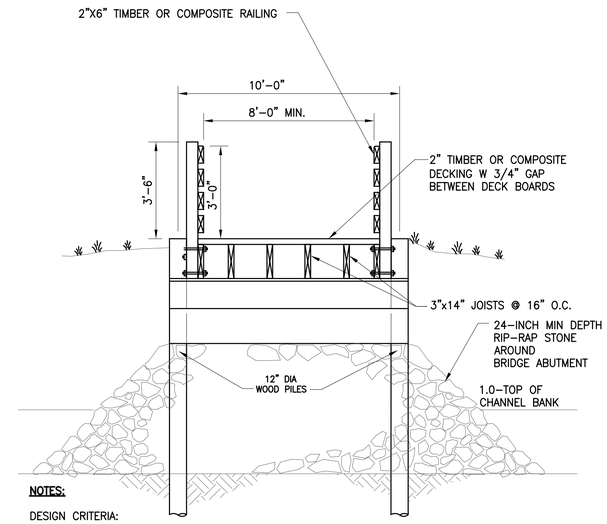

NOTES:

DESIGN CRITERIA:

1. THE WOODEN PEDESTRIAN BRIDGE SHALL BE DESIGNED BY A PROFESSIONAL STRUCTURAL ENGINEER REGISTERED IN THE COMMONWEALTH OF MASSACHUSETTS.
2. PILE DEPTH DRIVING CRITERIA SHALL BE BASED ON THE RECOMMENDATIONS OF A GEOTECHNICAL ENGINEER REGISTERED IN THE COMMONWEALTH OF MASSACHUSETTS.
3. DESIGN LIVE LOADS IN ACCORDANCE WITH MASSACHUSSETTS STATE BUILDING CODE 8TH EDITION, INCLUDING ALL REVISIONS AND AASHTO STANDARD FOR PEDESTRIAN BRIDGES.
   TIMBER PEDESTRIAN BRIDGE: 85 PSF
   HANDRAIL/GUARDRAIL: 50 PLF
   HANDRAIL/GUARDRAIL POSTS: 200 LBS IN ANY DIRECTION.
4. BRIDGE APPROACH SHALL MEET THE APPLICABLE REQUIREMENTS OF THE AMERICANS WITH DISABILITIES ACT (ADA).
5. TIMBER PILES SHALL BE 12" DIAMETER CCA TREATED SOUTHERN YELLOW PINE HAVING A MINIMUM TIP DIAMETER OF 8 INCHES. CCA RETENTION SHALL BE 2.5 POUNDS PER CUBIC FOOT.
6. TIMBER PILES SHALL CONFORM TO THE REQUIREMENTS OF ASTM D25.
7. RAILINGS SHALL COMPLY WITH MASSACHUSETTS STATE BUILDING CODE 8TH EDITION, INCLUDING ALL REVISIONS.
8. CONNECTION DETAILS SHALL BE SUITABLE FOR A SALT WATER ENVIRONMENT.

3 C-16 TIMBER PEDESTRIAN BRIDGE (SECTION B-B')

NTS

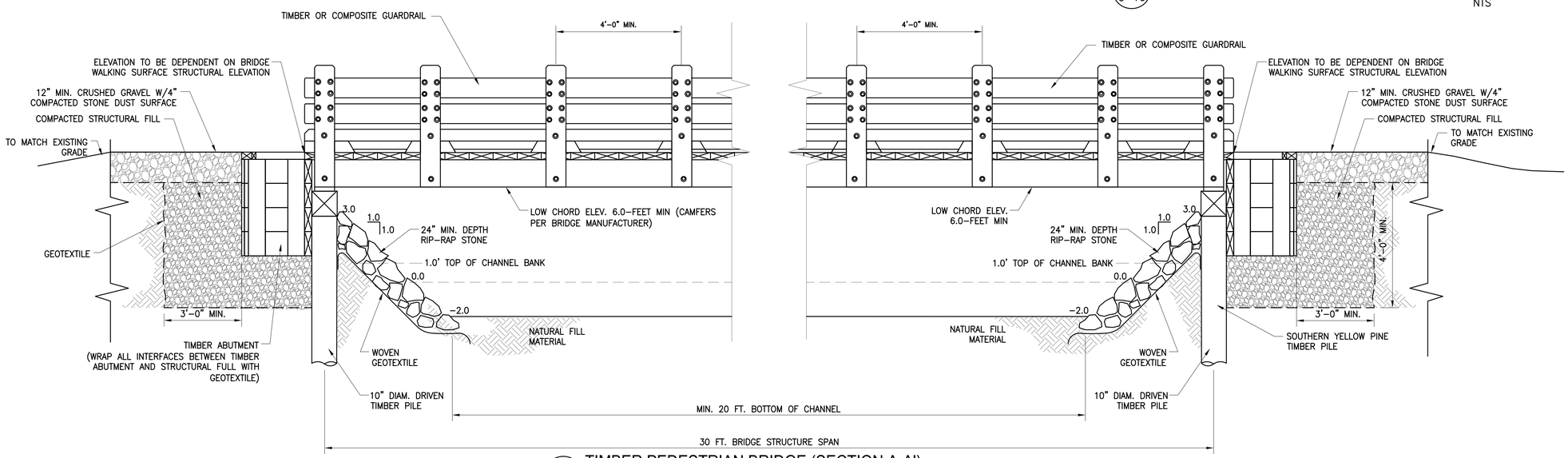

4 C-16 TIMBER PEDESTRIAN BRIDGE (SECTION A-A')

NTS

THE Louis Berger Group, INC.
ENGINEERS • PLANNERS
SCIENTISTS • ECONOMISTS
MANCHESTER, NH (603) 644–5200
NEEDHAM, MA (781) 444–3330
PROVIDENCE, RI (401) 521–5980

REV.	DESCRIPTION	DATE

NOT FOR CONSTRUCTION

National Oceanic and Atmospheric Administration - Restoration Center

55 GREAT REPUBLIC DRIVE
GLOUCESTER, MA 01930

MARSH ISLAND
SALT MARSH RESTORATION
FAIRHAVEN, MASSACHUSETTS

CONSTRUCTION DETAILS 2

SHEET TITLE:

SCALE:	AS SHOWN	DATE:	JUNE 2012
PROJECT MANAGER:	CAW		
PROJECT ENGINEER:	CF		
CHECKED BY:	CC	SHEET No.	C-16
DRAWN BY:	CL		
JOB NUMBER:	JI1822		

Jun 12, 2012 – 4:22pm F:\PROJECT\1822_NOAA_Marsh Island\DRAWINGS\FINAL DESIGN\CAD DRAWINGS\CIVIL\Detail-Plan.dwg

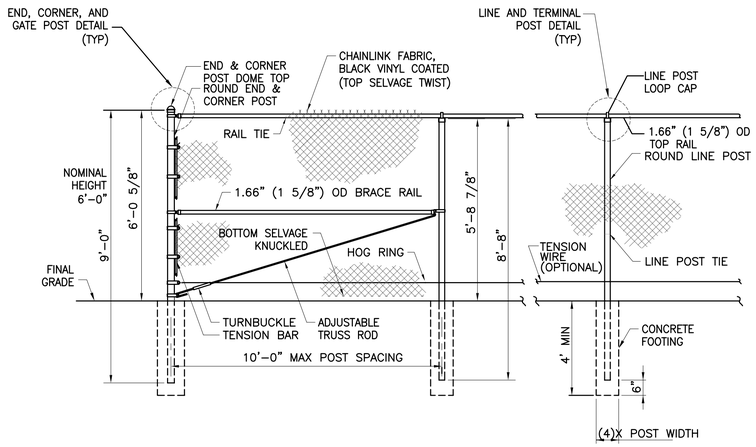

1 C-17 CHAIN-LINK FENCE DETAIL

NTS

FENCE SCHEDULE			
END & CORNER POST TOP	TOP & BOTTOM FABRIC OPTIONS		END & CORNER POST TOP OPTIONS
DOME	TOP SELVAGE TWIST	BOTTOM SELVAGE KNUCKLED	FLAT

NOTES:

1. ALL MATERIAL TO CONFORM TO FEDERAL SPEC RR-F-191G (1-25-74).
2. ALL GALVANIZED FITTINGS TO CONFORM TO ASTM-A153.
3. FOOTING WIDTH TO BE (4)X POST WIDTH.
4. CONTRACTOR MAY PROVIDE ALTERNATE POST SUPPORT FOR TEMPORARY FENCING IF APPROVED BY THE COTR.
5. PERMANENT FENCING SHALL BE BLACK VINYL COATED.

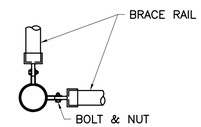

PLAN

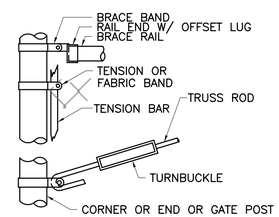

ELEVATION

NTS

2 C-17 END, CORNER, AND GATE POST DETAIL

NTS

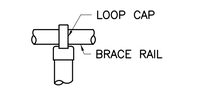

LINE POST ELEVATION

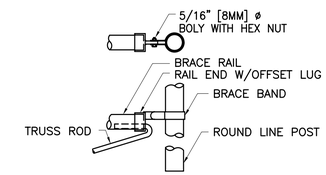

TERMINAL POST ELEVATION

3 C-17 LINE AND TERMINAL POST DETAIL

NTS

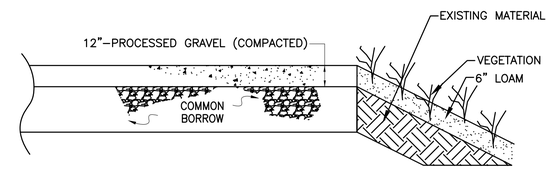

4 C-17 TYPICAL GRAVEL ACCESS ROAD/PARKING SURFACE

NTS

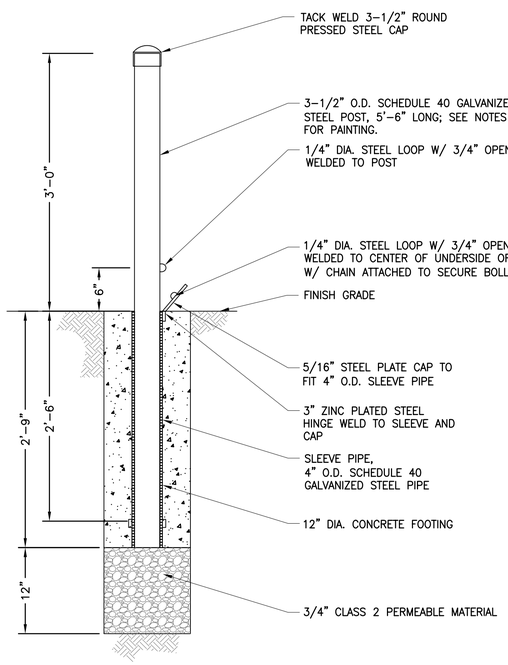

NOTES:

1. LOCATE ALL UNDERGROUND UTILITIES PRIOR TO EXCAVATING POST FOOTING.
2. PRIME ALL METAL WITH ONE COAT OF GALVANIZE-COMPATIBLE PRIMER AND TWO COATS OF BLACK INDUSTRIAL ENAMEL.
3. APPLY TWO 3" WIDE STRIPS OF REFLECTORIZED YELLOW TAPE. PROVIDE A 3" GAP BETWEEN EACH STRIP.

5 C-17 REMOVABLE BOLLARD DETAIL

NTS

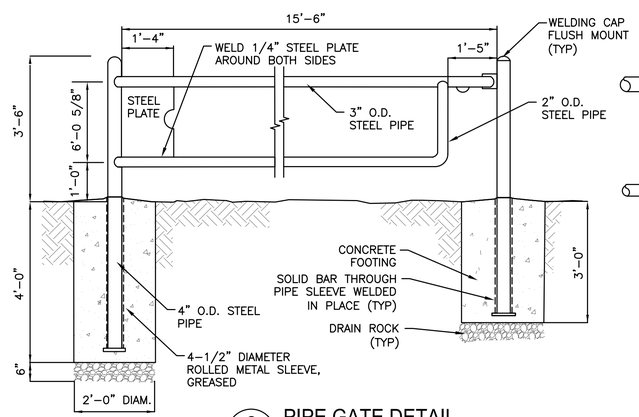

NOTES:

1. GATE SHALL BE CONSTRUCTED OF HOT DIPPED GALVANIZED STEEL (ASTM A153).
2. CONTRACTOR TO PROVIDE CHAIN AND PAD LOCK FOR EACH GATE.
3. CONTRACTOR SHALL HAVE ALL LOCKS/KEYS ALIKE A TOTAL OF 4 KEYS TO BE PROVIDED.

6 C-17 PIPE GATE DETAIL

NTS

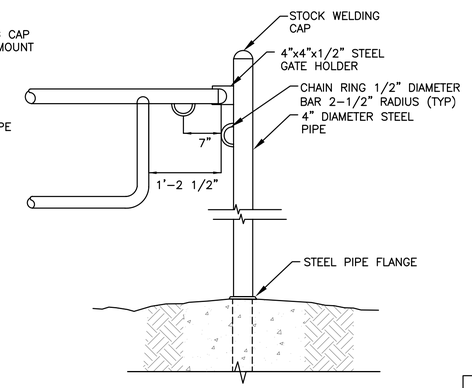

7 C-17 DETAIL AT GATE HOLDER

NTS

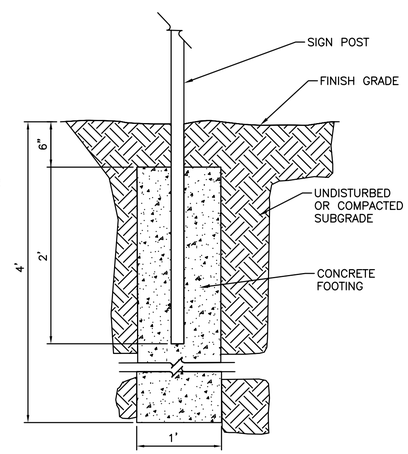

SIGNAGE LEGEND			
QUANTITY	NUMBER	SIZE	LEGEND
1	1	12"x16"	

8 C-17 SIGN POST FOOTING

NTS

THE Louis Berger Group, INC.

ENGINEERS • PLANNERS
SCIENTISTS • ECONOMISTS

MANCHESTER, NH (603) 644-5200
NEEDHAM, MA (781) 444-3330
PROVIDENCE, RI (401) 521-5980

REV.	DESCRIPTION	DATE

NOT FOR CONSTRUCTION

National Oceanic and Atmospheric Administration - Restoration Center

55 GREAT REPUBLIC DRIVE
GLOUCESTER, MA 01930

MARSH ISLAND
SALT MARSH RESTORATION
FAIRHAVEN, MASSACHUSETTS

CONSTRUCTION DETAILS 3

SHEET TITLE:

SCALE:	AS SHOWN	DATE:	JUNE 2012
PROJECT MANAGER:	CAW		
PROJECT ENGINEER:	CF		
CHECKED BY:	CC	SHEET No.	C-17
DRAWN BY:	CL		
JOB NUMBER:	JI1822		

Jun 12, 2012 – 4:23pm F:\PROJECT\1822_NOAA_Marsh Island\DRAWINGS\FINAL DESIGN\CAD DRAWINGS\CIVIL\Detail-Plan.dwg

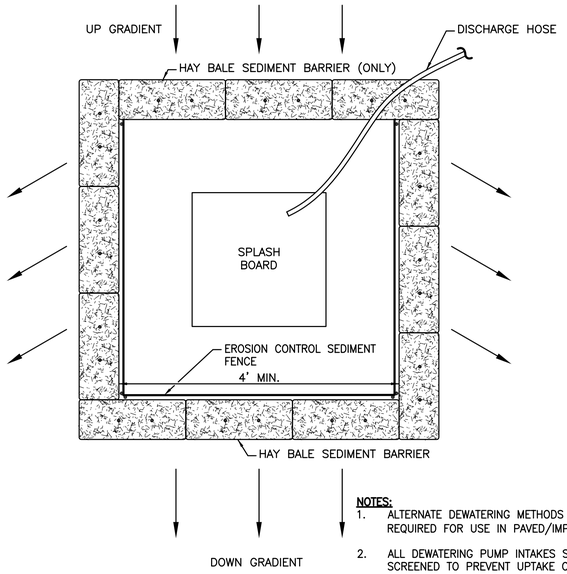

NOTES:

1. ALTERNATE DEWATERING METHODS MAY BE REQUIRED FOR USE IN PAVED/IMPERVIOUS AREAS.
2. ALL DEWATERING PUMP INTAKES SHALL BE SCREENED TO PREVENT UPTAKE OF SMALL FISH.

PLAN VIEW

1 / C-18 TYPICAL DEWATERING DISCHARGE DETAIL

NTS

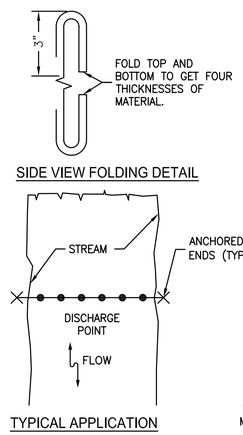

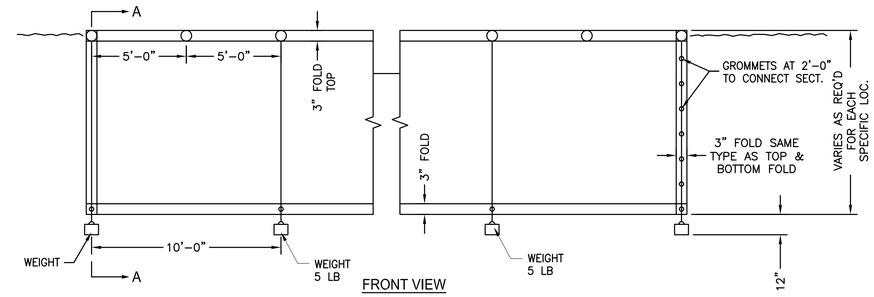

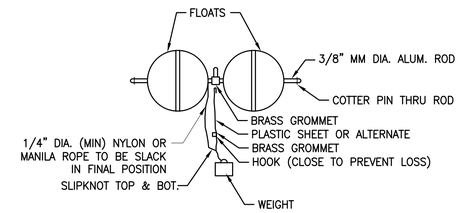

NOTES:

1. SUITABLE ALTERNATE MAY BE FASTENED TO STAKES DRIVEN INTO BOTTOM IN LIEU OF FLOATS AND WEIGHTS.

SECTION A-A

NOTES:

1. PLACE TURBIDITY BARRIER TO PREVENT DRIFTING OF SILT CAUSED BY DISCHARGE DURING CONSTRUCTION, DREDGING OR FILLING OPERATIONS.
2. THE DETAILS SHOWN ON THIS SHEET ARE SUGGESTED METHODS ONLY. ALTERNATE SOLUTION AND USAGE OF MATERIALS MAY BE USED AS APPROVED BY THE COTR.
3. PROVIDE SLACK FOR TIDAL MOVEMENT.
4. MAINTAIN BARRIER AT ALL TIMES.
5. 1/4" DIA. (MIN.) NYLON OR MANILA ROPE FORMS REINFORCEMENT AIDS IN REMOVAL OR RELOCATION OF BARRIER BY SERVING AS A PICK-UP LINE FOR WEIGHTS. ROPES AND WEIGHTS AREA TO BE ATTACHED TO END FLOATS AND EVERY SECOND FLOAT BETWEEN END FLOATS.
6. SECURELY ANCHOR ENDS OF FLOATING TURBIDITY BARRIER.

2 / C-18 FLOATING TURBIDITY BARRIER

NTS

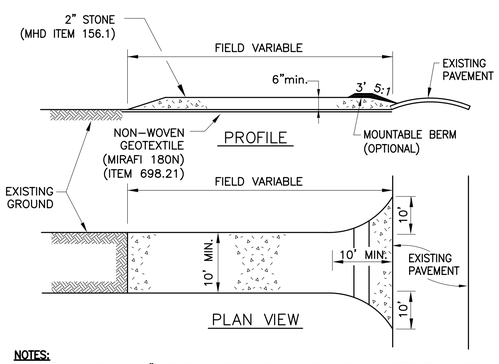

NOTES:

1. STONE SIZE: USE 2" STONE, OR RECLAIMED OR RECYCLED CONCRETE EQUIVALENT.
2. LENGTH: RECOMMEND GREATER THAN OR EQUAL TO 50-FEET WHERE PRACTICABLE.
3. THICKNESS: NOT LESS THAN 6-INCHES.
4. WIDTH: 10-FOOT MINIMUM, BUT NOT LESS THAN THE FULL WIDTH AT POINTS WHERE INGRESS OR EGRESS OCCURS.
5. FILTER CLOTH: WILL BE PLACED OVER THE ENTIRE AREA PRIOR TO PLACING OF STONE.
6. SURFACE WATER: ALL SURFACE WATER FLOWING OR DIVERTED TOWARD CONSTRUCTION ENTRANCES SHALL BE PIPED ACROSS THE ENTRANCE. IF PIPING IS IMPRACTICAL, A MOUNTABLE BERM WILL BE PERMITTED.
7. MAINTENANCE: THE ENTRANCE SHALL BE MAINTAINED IN A CONDITION WHICH WILL PREVENT TRACKING OR FLOWING OF SEDIMENT ONTO PUBLIC RIGHTS-OF-WAY. THIS MAY REQUIRE PERIODIC TOP DRESSING WITH ADDITIONAL STONE AS CONDITIONS DEMAND. REPAIR AND/OR CLEANOUT OF ANY MEASURES USED TO TRAP SEDIMENTS SHALL BE MADE AS NECESSARY OR AS DIRECTED BY THE CONTRACTING OFFICER'S TECHNICAL REPRESENTATIVE (COTR).
8. PERIODIC INSPECTION AND NEEDED MAINTENANCE SHALL BE PROVIDED BY THE CONTRACTOR.
9. THE USE OF STONE AND NON WOVEN GEOTEXTILE SHALL MEET THE SPECIFICATION FOR THEIR RESPECTIVE ITEM NUMBERS.

3 / C-18 STABILIZED CONSTRUCTION ENTRANCE

NTS

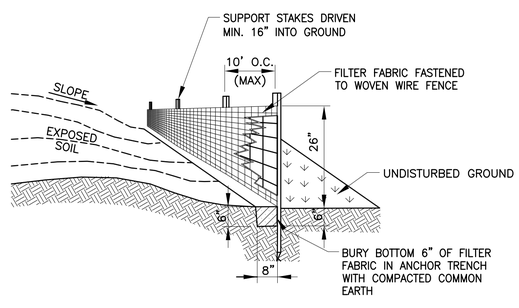

NOTES:

1. SUPPORT STAKES: DURABLE HARDWOOD, 1"x1"x48" DIMENSION.
2. FILTER FABRIC: HIGH STRENGTH NYLON, POLYESTER, PROPYLENE OR ETHYLENE YARN (50 LB/LIN. FT. (MIN)) WITH A FLOW RATE OF AT LEAST 0.3 GAL./FT./MINUTE. FABRIC TO CONTAIN ULTRAVIOLET RAY INHIBITORS AND STABILIZERS.
3. INSTALL SEDIMENTATION FENCE WHERE INDICATED OR AS DIRECTED BY THE COTR.
4. EXCAVATE ANCHOR TRENCH ON THE UPSLOPE SIDE OF THE PROPOSED FENCE LINE ALONG THE ENTIRE LENGTH.
5. DRIVE SUPPORT STAKES ON DOWNSLOPE SIDE OF PROPOSED FENCE.
6. BACKFILL ANCHOR TRENCH WITH COMMON EARTH AND COMPACT TO APPROXIMATE DENSITY OF SURROUNDING NATIVE SOIL.
7. MAINTAIN SILT FENCE AND REMOVE SEDIMENT WHEN "BULGES" DEVELOP.

4 / C-18 SEDIMENTATION FENCE

NTS

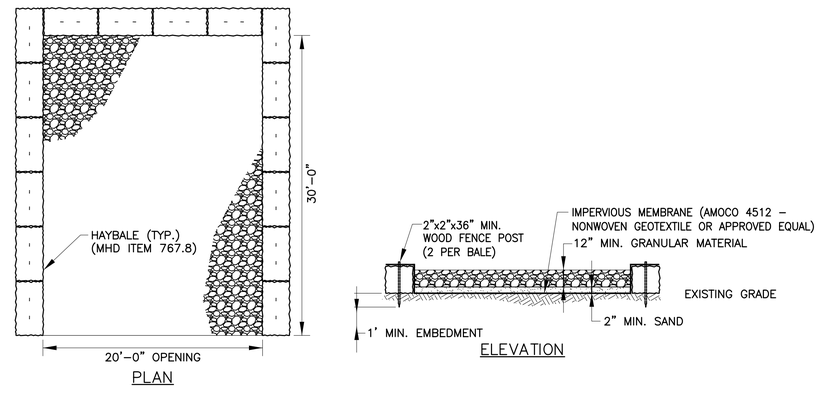

NOTES:

1. THE CONTRACTOR SHALL BE RESPONSIBLE FOR MAINTAINING THE HAY BALES, IMPERVIOUS MEMBRANE AND GRANULAR MATERIAL AT COMPLETION OF THE CONTRACT. THE HAY BALES, IMPERVIOUS MEMBRANE AND GRANULAR MATERIAL SHALL BE REMOVED AND DISPOSED OF BY THE CONTRACTOR AT NO ADDITIONAL COMPENSATION.
2. THE REFUELING SITE SHALL BE PLACED WITHIN THE STAGING AREA.
3. THE REFUELING SITE SHALL CONSIST OF HAY BALES, IMPERVIOUS MEMBRANE AND GRANULAR MATERIAL.
4. IMPERVIOUS MEMBRANE SHALL OVERLAP THE TOP OF THE HAY BALES AND BE SECURED BY WOODEN STAKES.
5. A 2-INCH MINIMUM LAYER OF SAND SHALL BE PLACED ON TOP OF THE IMPERVIOUS MEMBRANE. A 12-INCH MINIMUM LAYER OF GRANULAR MATERIAL SHALL BE PLACED ON TOP OF THE SAND. WHEN PLACING THE GRANULAR MATERIAL, CARE SHALL BE TAKEN SO AS NOT TO TEAR THE IMPERVIOUS MEMBRANE. THE GRANULAR MATERIAL SHALL BE MONITORED SO IT DOES NOT MEASURE LESS THAN 12-INCHES THICK AT ANY TIME.
6. STAKES TO SECURE HAY BALES AND IMPERVIOUS MEMBRANE SHALL BE 2-INCHES BY 2-INCHES OR EQUIVALENT DURABLE HARDWOOD, AND SHALL BE LONG ENOUGH TO EXTEND 1-FOOT MINIMUM INTO THE GROUND.
7. BALES SHALL BE SET ON EXISTING GROUND OR AS DIRECTED BY THE COTR.
8. ALTERNATE REFUELING SITE DETAILS MAY BE REQUIRED FOR USE IN PAVED AREAS.

5 / C-18 REFUELING SITE DETAILS (IF NEEDED)

NTS

THE Louis Berger Group, INC.
ENGINEERS • PLANNERS
SCIENTISTS • ECONOMISTS
MANCHESTER, NH (603) 644-5200
NEEDHAM, MA (781) 444-3330
PROVIDENCE, RI (401) 521-5980

REV.	DESCRIPTION	DATE

NOT FOR CONSTRUCTION

National Oceanic and Atmospheric Administration - Restoration Center
55 GREAT REPUBLIC DRIVE
GLOUCESTER, MA 01930

MARSH ISLAND
SALT MARSH RESTORATION
FAIRHAVEN, MASSACHUSETTS

CONSTRUCTION DETAILS 4

SHEET TITLE:

SCALE:	AS SHOWN	DATE:	JUNE 2012
PROJECT MANAGER:	CAW		
PROJECT ENGINEER:	CF		
CHECKED BY:	CC	SHEET No.	C-18
DRAWN BY:	CL		
JOB NUMBER:	JI1822		

Jun 12, 2012 - 4:28pm F:\PROJECT\1822_NOAA_Marsh Island\DRAWINGS\FINAL DESIGN\CAD DRAWINGS\CIVIL\Detail-Plan.dwg

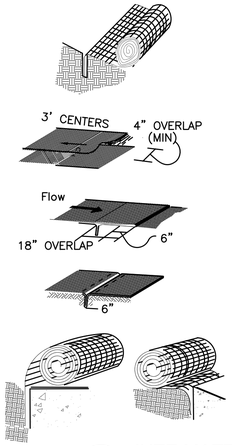

NOTES:

1. ANCHOR SLOT: BURY THE UP-CHANNEL END OF THE NET IN A 6" DEEP TRENCH. TAMP THE SOIL FIRMLY. STAPLE AT 12" INTERVALS ACROSS THE NET.
2. OVERLAP: OVERLAP EDGES OF THE STRIPS AT LEAST 4". STAPLE EVERY 3-FEET DOWN THE CENTER OF THE OVERLAP.
3. JOINING STRIPS: INSERT THE NEW ROLL OF NET IN A TRENCH, AS WITH THE ANCHOR SLOT. OVERLAP THE UP-CHANNEL END OF THE PREVIOUS ROLL 18" AND TURN THE END UNDER 6". STAPLE THE END OF THE PREVIOUS ROLL JUST BELOW THE ANCHOR SLOT AND AT 12" INTERVALS.
4. CHECK SLOTS: ON ERODIBLE SOILS OR STEEP SLOPES, CHECK SLOTS SHOULD BE MADE EVERY 15-FEET. INSERT A FOLD OF THE NET INTO A 6" TRENCH AND TAMP FIRMLY. STAPLE AT 12" INTERVALS ACROSS THE NET. LAY THE NET SMOOTHLY ON THE SURFACE OF THE SOIL – DO NOT STRETCH THE NET AND DO NOT ALLOW WRINKLES.
5. ANCHORING ENDS AT STRUCTURES: PLACE THE END OF THE NET IN A 6" SLOT ON THE UP-CHANNEL SIDE OF THE STRUCTURE. FILL THE TRENCH AND TAMP FIRMLY. ROLL THE NET UP THE CHANNEL. PLACE STAPLES AT 12" INTERVALS ALONG THE ANCHOR END OF THE NET.

1 / C-19 JUTE MATTING INSTALLATION

NTS

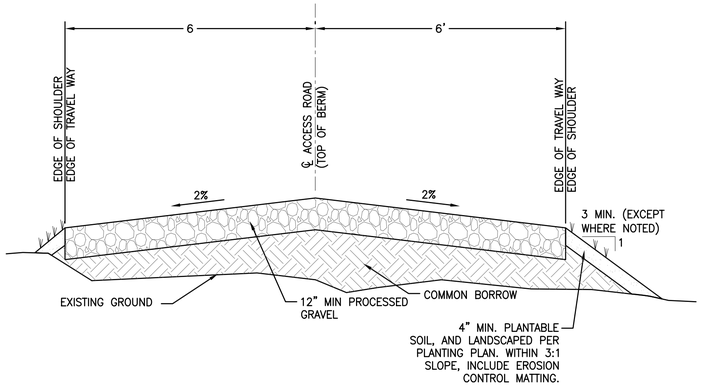

2 / C-19 PERIMETER ACCESS ROAD

NTS

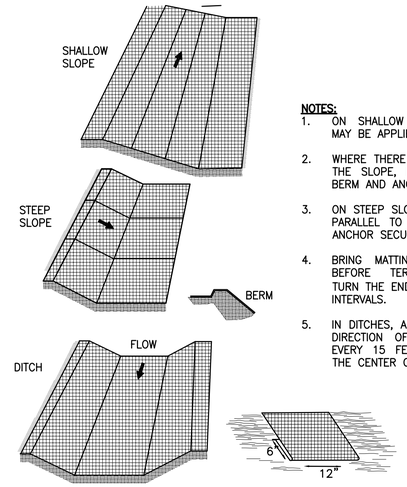

NOTES:

1. ON SHALLOW SLOPES, STRIPS OF MATTING MAY BE APPLIED ACROSS THE SLOPE.
2. WHERE THERE IS A BERM AT THE TOP OF THE SLOPE, BRING THE MATTING OVER THE BERM AND ANCHOR IT BEHIND THE BERM.
3. ON STEEP SLOPES, APPLY STRIPS OF MATTING PARALLEL TO THE DIRECTION OF FLOW AND ANCHOR SECURELY.
4. BRING MATTING DOWN TO A LEVEL AREA BEFORE TERMINATING THE INSTALLATION. TURN THE END UNDER 6" AND STAPLE AT 12" INTERVALS.
5. IN DITCHES, APPLY MATTING PARALLEL TO THE DIRECTION OF FLOW. USE CHECK SLOTS EVERY 15 FEET. DO NOT JOIN STRIPS IN THE CENTER OF THE DITCH.

3 / C-19 ORIENTATION OF JUTE MATTING

NTS

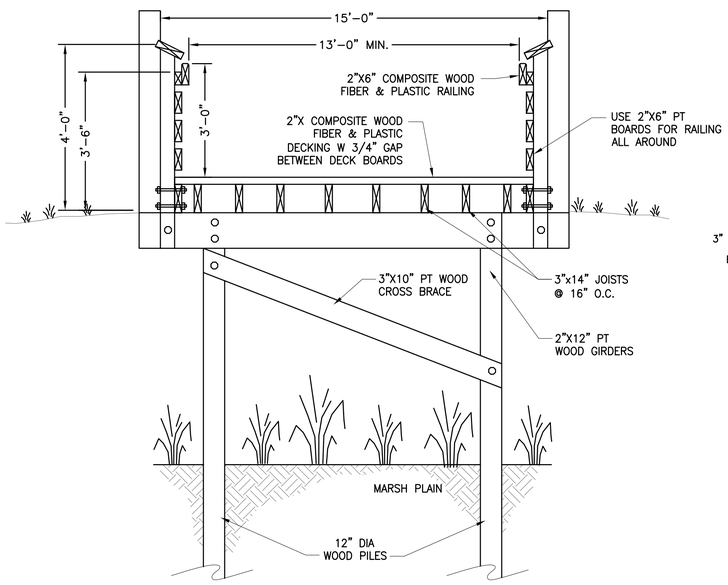

4 / C-19 TIMBER VIEWING PLATFORM

NTS

NOTES:

1. THE TIMBER VIEWING PLATFORM SHALL BE DESIGNED BY A PROFESSIONAL STRUCTURAL ENGINEER REGISTERED IN THE COMMONWEALTH OF MASSACHUSETTS.
2. PILE DEPTH DRIVING CRITERIA SHALL BE BASED ON THE RECOMMENDATIONS OF A GEOTECHNICAL ENGINEER REGISTERED IN THE COMMONWEALTH OF MASSACHUSETTS.
3. DESIGN LIVE LOADS IN ACCORDANCE WITH MASSACHUSSETTS STATE BUILDING CODE 8TH EDITION, INCLUDING ALL REVISIONS.
   BOARDWALK: 100 PSF
   HANDRAIL/GUARDRAIL: 50 PLF
   HANDRAIL/GUARDRAIL POSTS: 200 LBS IN ANY DIRECTION.
4. APPROACH TO TIMBER VIEWING PLATFORM SHALL MEET THE APPLICABLE REQUIREMENTS OF THE AMERICANS WITH DISABILITIES ACT (ADA).
5. TIMBER PILES SHALL BE 12" DIAMETER CCA TREATED SOUTHERN YELLOW PINE HAVING A MINIMUM TIP DIAMETER OF 8 INCHES. CCA RETENTION SHALL BE 2.5 POUNDS PER CUBIC FOOT.
6. TIMBER PILES SHALL CONFORM TO THE REQUIREMENTS OF ASTM D25.
7. RAILINGS SHALL COMPLY WITH MASSACHUSETTS STATE BUILDING CODE 8TH EDITION, INCLUDING ALL REVISIONS.
8. CONNECTION DETAILS SHALL BE SUITABLE FOR A SALT WATER ENVIRONMENT.
9. THE CONTRACTOR SHALL SUPPLY RAIL SUPPORTED INTERPRETIVE SIGN AND ALL NECESSARY MOUNTING HARDWARE. SIGN SHALL BE 24" BY 36". SIGN DETAILS TO BE PROVIDED BY COTR.

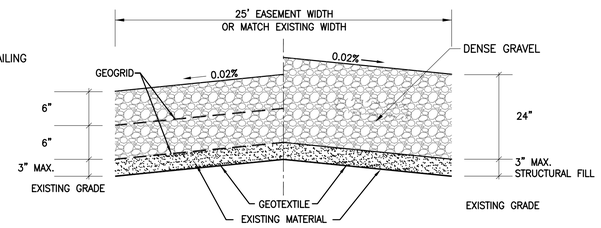

NOTES:

1. ALL COURSES TO BE COMPACTED IN PLACE TO REQUIRED THICKNESS, MIN. 95% SPMD.
2. DENSE GRAVEL MATERIAL TO CONFORM TO APPLICABLE STANDARDS.
3. CONTRACTOR SHALL HAVE OPTION IN USING EITHER CROSS SECTION

5 / C-19 CONSTRUCTION ACCESS ROAD

NTS

DESIGN AND CONSTRUCTION SUPERVISED BY
NOAA RESTORATION CENTER

FUNDING PROVIDED BY
NEW BEDFORD HARBOR TRUSTEE COUNCIL

LAND OWNER:
THE COALITION FOR BUZZARDS BAY

MARSH ISLAND SALT MARSH RESTORATION PROJECT

FAIRHAVEN, MASSACHUSETTS

DESIGN BY:
THE LOUIS BERGER GROUP, INC.
PROVIDENCE, RI

LAND OWNER:
FAIRHAVEN ACUSHNET LAND PRESERVATION TRUST

6 / C-19 CONSTRUCTION SIGN

NTS

MA DEP
FILE NUMBER SE23 – 1094

MARSH ISLAND
SALT MARSH RESTORATION

7 / C-19 MADEP SIGN

NTS

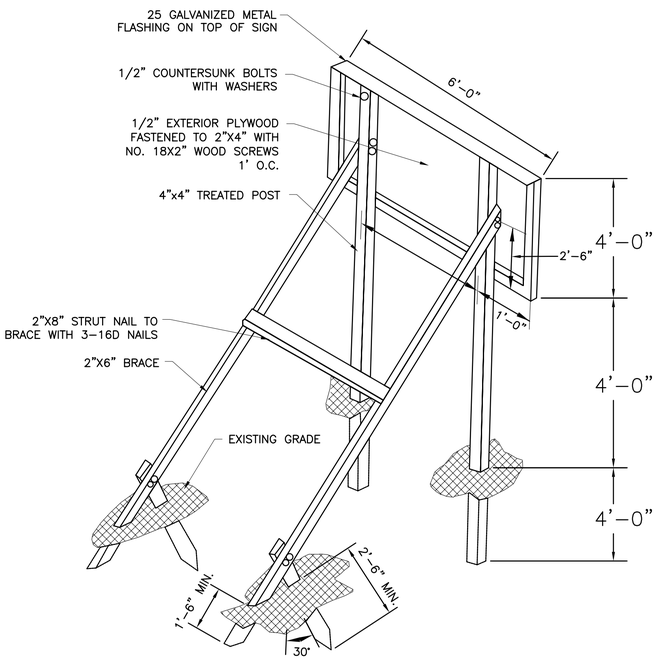

8 / C-19 PROJECT - CONSTRUCTION SIGNAGE

NTS

THE Louis Berger Group, INC.
ENGINEERS • PLANNERS
SCIENTISTS • ECONOMISTS
MANCHESTER, NH (603) 644-5200
NEEDHAM, MA (781) 444-3330
PROVIDENCE, RI (401) 521-5980

REV.	DESCRIPTION	DATE

NOT FOR CONSTRUCTION

National Oceanic and Atmospheric Administration - Restoration Center
55 GREAT REPUBLIC DRIVE
GLOUCESTER, MA 01930

MARSH ISLAND
SALT MARSH RESTORATION
FAIRHAVEN, MASSACHUSETTS

CONSTRUCTION DETAILS 5

SHEET TITLE:

SCALE:	AS SHOWN	DATE:	JUNE 2012
PROJECT MANAGER:	CAW		
PROJECT ENGINEER:	CF		
CHECKED BY:	CC	SHEET No.	C-19
DRAWN BY:	CL		
JOB NUMBER:	JI1822		

Jun 12, 2012 – 4:25pm F:\PROJECT\1822_NOAA_Marsh Island\DRAWINGS\FINAL DESIGN\CAD DRAWINGS\CIVIL\Detail-Plan.dwg

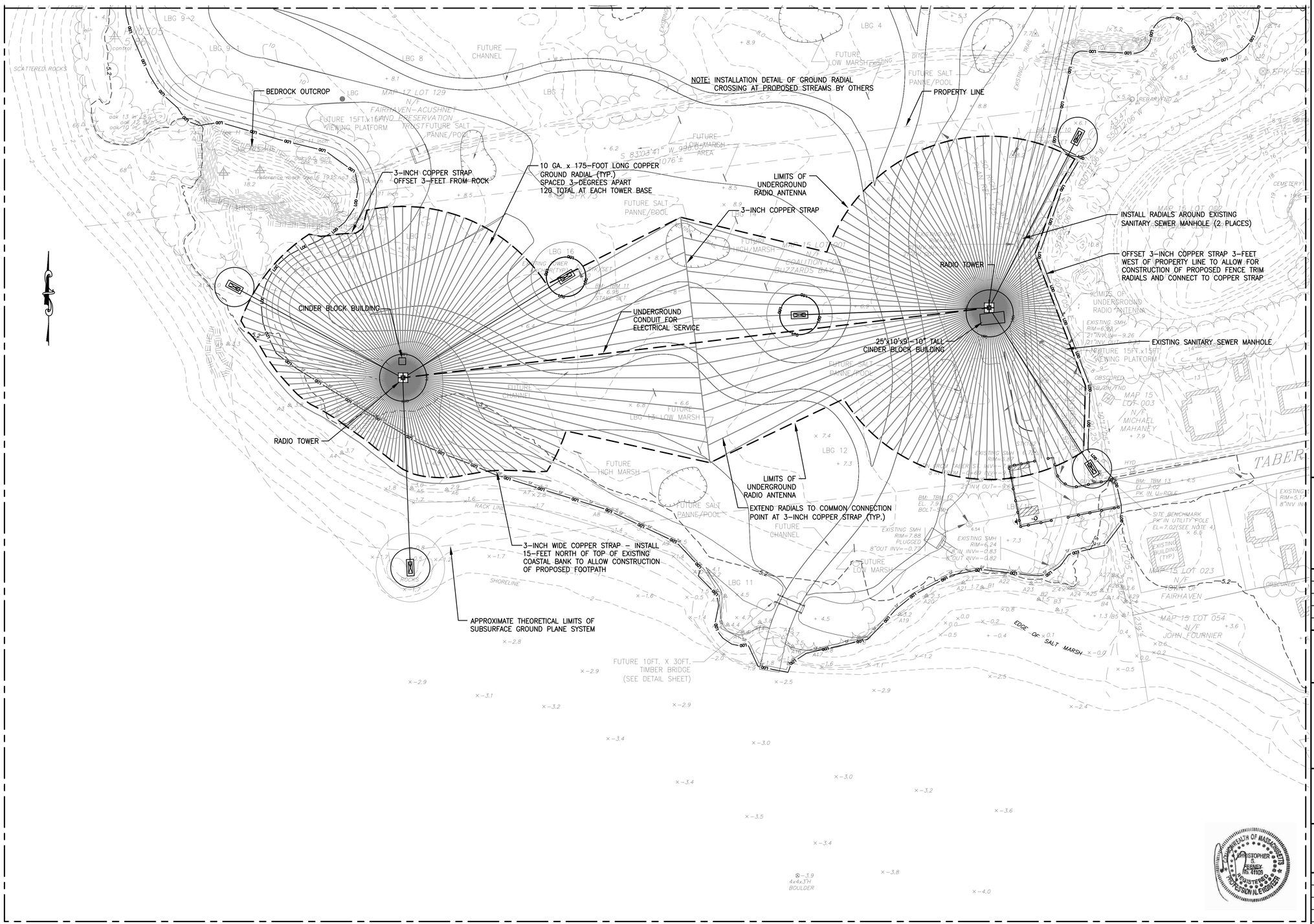

NOTES:

1. FURTHER COORDINATION AND DESIGN IS REQUIRED FOR THE CONSTRUCTION OF THE UNDERGROUND RADIO ANTENNA. THE GENERAL LAYOUT IS SHOWN TO ILLUSTRATE THE EXTENT OF THE SYSTEM.
2. PROPOSED CONSTRUCTION SEQUENCE IS TO INSTALL THE PROPOSED RADIO ANTENNA SYSTEM 2-FEET BELOW PROPOSED FINAL GRADES. THE SYSTEM WILL BE ROUTED BELOW CHANNEL AT A DEPTH NOT TO CAUSE INTERFERENCE WITH TIDAL FLOW.
3. PROPOSED ELECTRICAL CONDUIT MAY BE RE-ROUTED TO INSTALL NEEDED ELECTRICAL HAND HOLES SO AS NOT TO EXCEDE MAXIMUM PULL LENGTH.

50 25 0 50 100

SCALE IN FEET

THE Louis Berger Group, INC.

ENGINEERS • PLANNERS
SCIENTISTS • ECONOMISTS

MANCHESTER, NH (603) 644-5200
NEEDHAM, MA (781) 444-3330
PROVIDENCE, RI (401) 521-5980

REV.	DESCRIPTION	DATE

NOT FOR CONSTRUCTION

National Oceanic and Atmospheric Administration - Restoration Center

55 GREAT REPUBLIC DRIVE
GLOUCESTER, MA 01930

MARSH ISLAND SALT MARSH RESTORATION

FAIRHAVEN, MASSACHUSETTS

RADIO ANTENNA UNDERGROUND LIMITS

SHEET TITLE:

SCALE:	AS SHOWN	DATE:	JUNE 2012
PROJECT MANAGER:	CAW		
PROJECT ENGINEER:	CF		
CHECKED BY:	CC	SHEET No.	C-20
DRAWN BY:	CL		
JOB NUMBER:	JI1822		

Jun 12, 2012 - 4:50pm F:\PROJECT\1822_NOAA_Marsh Island\DRAWINGS\FINAL DESIGN\CAD DRAWINGS\CIVIL\RADIO TOWER SITE PLAN.dwg