RETURN TO SER AR INDEX

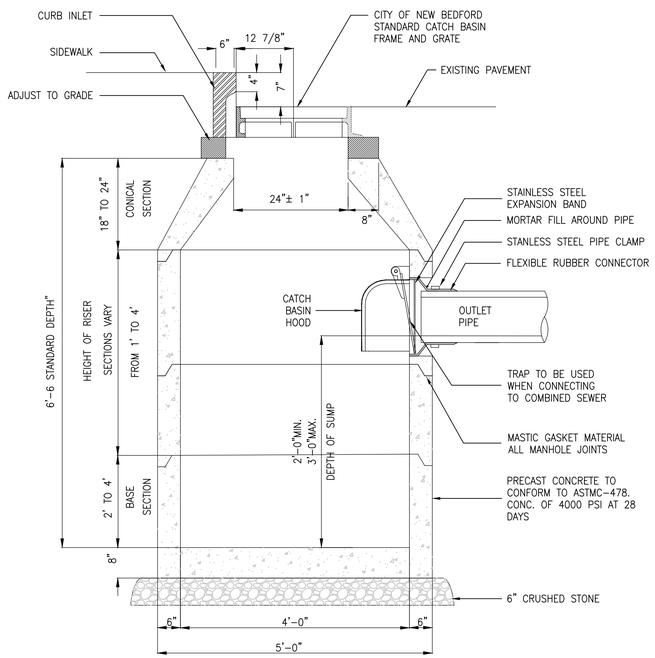

PRECAST CONCRETE CATCH BASIN

NOT TO SCALE

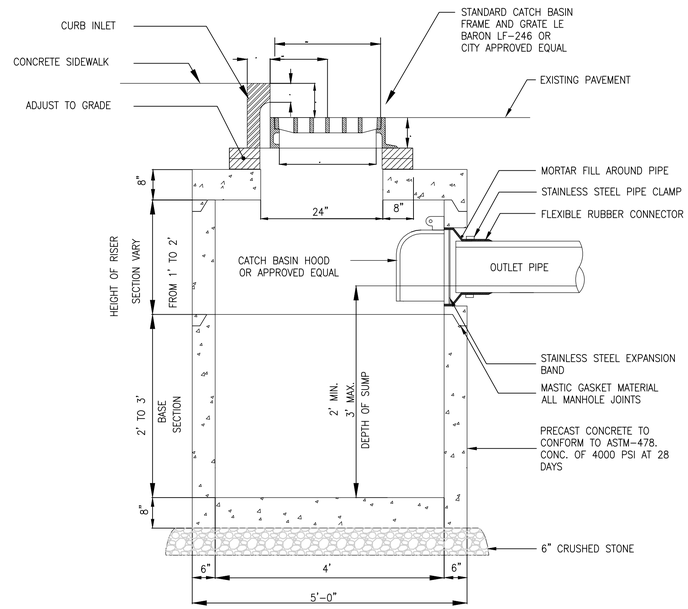

SHALLOW CATCH BASIN

NOT TO SCALE

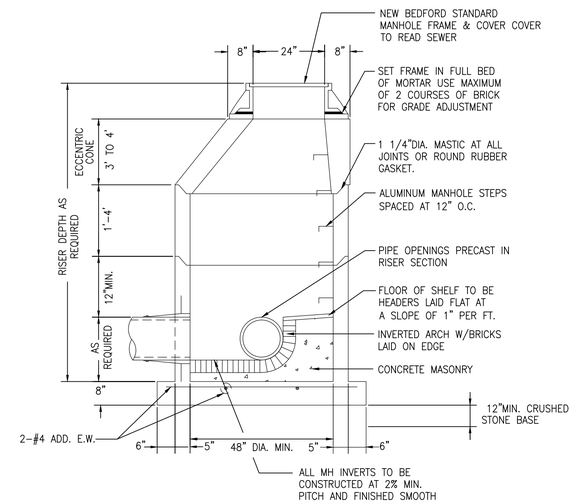

NOTES:

1. MANHOLE DESIGN TO CONFORM TO PRECAST CONCRETE MANHOLE SECTIONS – ASTM C478 LATEST REVISION.
2. FILL OUTSIDE FACE OF ALL MANHOLE JOINTS W/NON SHRINK MORTAR.
3. USE FLAT TOP SLAB WHEN HEIGHT OF CONE SECTION IS LESS THAN 8'
4. PROVIDE PIPE JOINTS NO MORE THAN 3'-0" FROM OUTSIDE FACE
5. PLUG LIFT HOLES SOLID W/MASTIC.
6. PROVIDE FLEXIBLE SLEEVE AND STAINLESS STEEL STRAP AT ALL PIPE TO MANHOLE JOINTS.

TYPICAL PRECAST SEWER MANHOLE

NOT TO SCALE

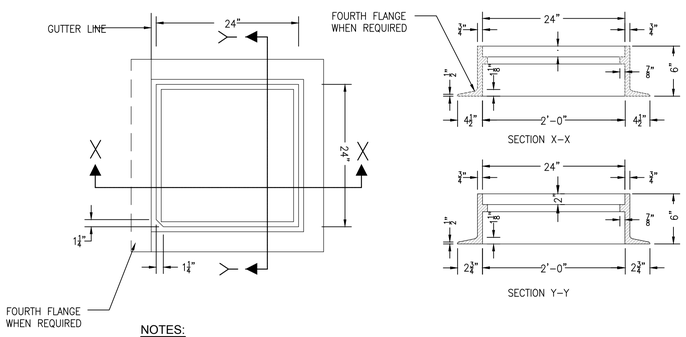

NOTES:

1. FRAME & COVER WEIGHT : 400 LBS +/-
2. MATERAL – CAST IRON
3. TO BE USED WITH SQUARE OPENING TYPE GRATE LeBARON MODEL# LF-246 OR APPROVED EQUAL

CATCH BASIN FRAME

NOT TO SCALE

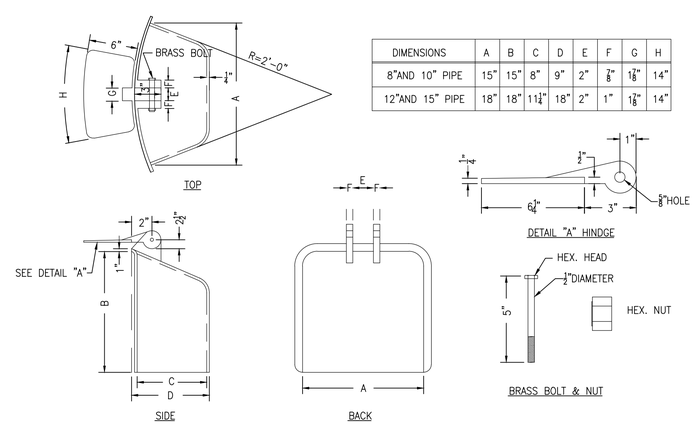

DIMENSIONS	A	B	C	D	E	F	G	H
8"AND 10" PIPE	15"	15"	8"	9"	2"	7/8"	1 7/8"	14"
12"AND 15" PIPE	18"	18"	11¼"	18"	2"	1"	1 7/8"	14"

HOODS TO BE GRAY CAST IRON AASHTO CLASS # 30

CATCH BASIN HOOD

NOT TO SCALE

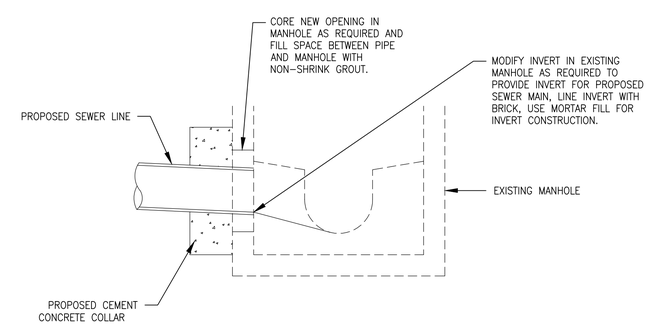

SEWER LINE CONNECTION TO EXISTING MANHOLE DETAIL

NOT TO SCALE

APEX

ROCKVILLE, MD
SOUTH WINDSOR, CT - BOSTON, MA - NEW BEDFORD, MA - HOLYOKE, MA

184 HIGH STREET, SUITE 502
BOSTON, MA 02210

58H CONNECTICUT AVENUE
SOUTH WINDSOR, CT

This drawings prepared by Apex for this project are instruments of Apex's service for use solely with respect to this project, and Apex shall be deemed the author of the Drawing and shall retain all common law, statutory and other reserved rights with respect thereto, including the copyright. The Documents shall not be used on other projects, for additions to this project or for completion of this project by others, except by agreement in writing and with appropriate compensation to Apex. .

Maguire Group Inc.
Architects / Engineers / Planners
225 Chapman Street, 4th Floor
Providence,Rhode Island 02905
401-272-6000
www.maguiregroup.com

PROJECT
NEW BEDFORD MARINE COMMERCE TERMINAL

OWNER
MASSACHUSETTS CLEAN ENERGY CENTER
55 SUMMER STREET, 9TH FLOOR
BOSTON, MASSACHUSETTS

NO.	DATE	DESCRIPTION	BY

PROJECT NO.	6690
CADD FILE	
DESIGNED BY	JTS
DRAWN BY	JTS
CHECKED BY	JAJ
DATE	11/29/11
DRAWING SCALE	1"=50'

GRAPHIC SCALE

AS SHOWN

SHEET TITLE

UTILITY DETAILS 1

100% DESIGN ADDENDUM
DECEMBER 16, 2011

DRAWING NO.

D-1
DRAFT

SDMS Doc ID 526331

NOT FOR CONSTRUCTION

PLOT SCALE 1/16"=1'-0"

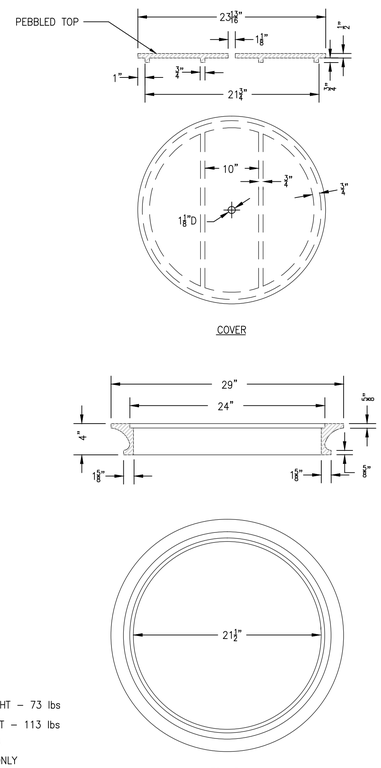

NOTES:

1. MININUM COVER WEIGHT – 73 lbs
2. MININUM FRAME WEIGHT – 113 lbs
3. MATERAL – CAST IRON
4. SIDEWALK AREA USE ONLY

FRAME & COVER FOR CATCH BASINS (MUNICIPAL STANDARD)

NOT TO SCALE

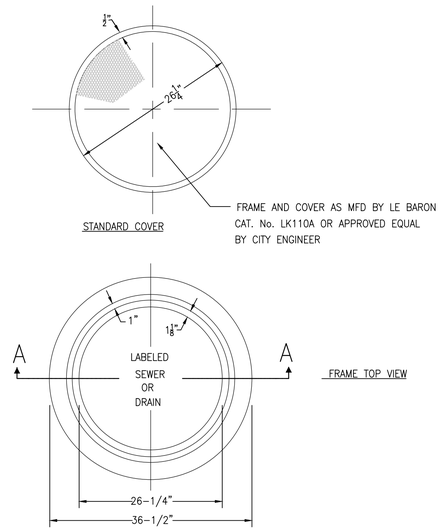

NOTES :

1. FRAME & COVER WEIGHT – 475 LBS
2. MATERAL – CAST IRON
3. LeBARON LK 110A OR APPROVED EQUAL BY CITY ENGINEER

MANHOLE FRAME AND COVER

NOT TO SCALE

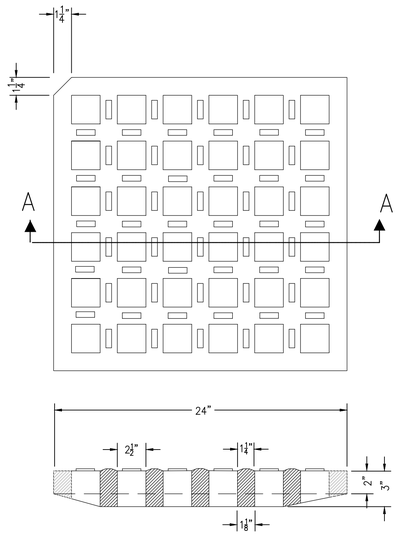

NOTES :

1. MININUM GRATE WEIGHT – 220± lbs
2. MATERAL – CAST IRON
3. TO BE USED WITH STANDARD CATCH BASIN FRAME. LeBARON MOD# LF–246 OR CITY APPROVED EQUAL

" SQUARE OPENING TYPE " CATCH BASIN GRATE

NOT TO SCALE

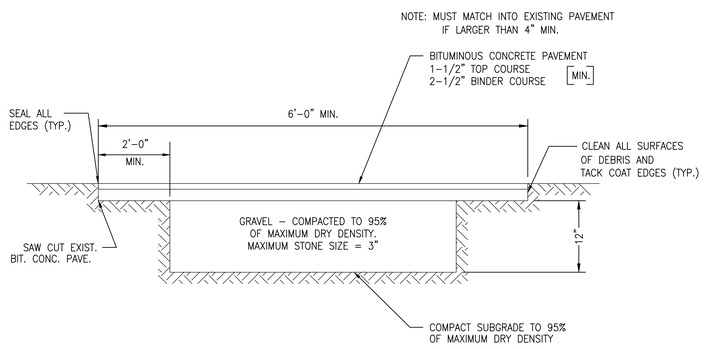

TYPICAL BITUMINOUS CONCRETE PAVEMENT RESTORATION DETAIL

NOT TO SCALE

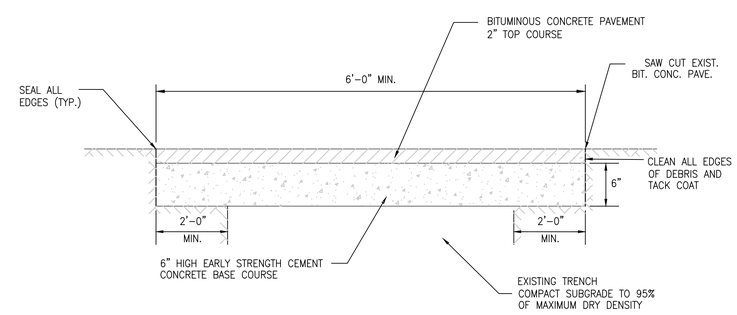

NOTE:

SPECIAL PAVEMENT RESTORATION DETAIL TO BE USED AS DIRECTED BY THE DPI COMMISSIONER IN AREAS THAT FLOWABLE FILL CAN NOT BE USED

SPECIAL BITUMINOUS CONCRETE PAVEMENT RESTORATION DETAIL

NOT TO SCALE

APEX

ROCKVILLE, MD
SOUTH WINDSOR, CT - BOSTON, MA -
NEW BEDFORD, MA - HOLYOKE, MA

184 HIGH STREET, SUITE 502
BOSTON, MA 02210

58H CONNECTICUT AVENUE
SOUTH WINDSOR, CT

This drawings prepared by Apex for this project are instruments of Apex's service for use solely with respect to this project, and Apex shall be deemed the author of the Drawing and shall retain all common law, statutory and other reserved rights with respect thereto, including the copyright. The Documents shall not be used on other projects, for additions to this project or for completion of this project by others, except by agreement in writing and with appropriate compensation to Apex. .

Maguire Group Inc.
Architects / Engineers / Planners
225 Chapman Street, 4th Floor
Providence,Rhode Island 02905
401–272–6000
www.maguiregroup.com

PROJECT

NEW BEDFORD
MARINE COMMERCE
TERMINAL

OWNER

MASSACHUSETTS CLEAN ENERGY CENTER
55 SUMMER STREET, 9TH FLOOR
BOSTON, MASSACHUSETTS

NO.	DATE	DESCRIPTION	BY

PROJECT NO.	6690
CADD FILE	
DESIGNED BY	JTS
DRAWN BY	JTS
CHECKED BY	JAJ
DATE	11/29/11
DRAWING SCALE	1"=50'

GRAPHIC SCALE

AS SHOWN

SHEET TITLE

UTILITY
DETAILS 2

100% DESIGN ADDENDUM
DECEMBER 16, 2011

DRAWING NO.

D-2
DRAFT

NOT FOR CONSTRUCTION

PLOT SCALE 1/16"=1'–0"

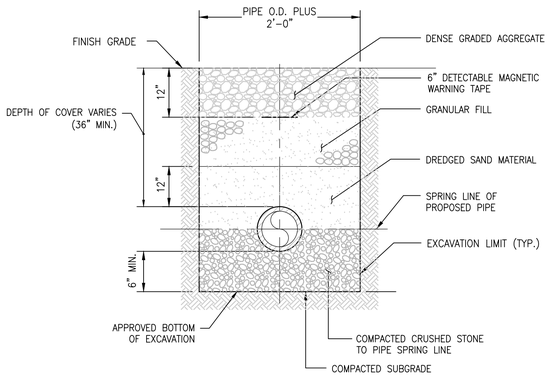

DRAIN & SEWER PIPE TRENCH DETAIL

NOT TO SCALE

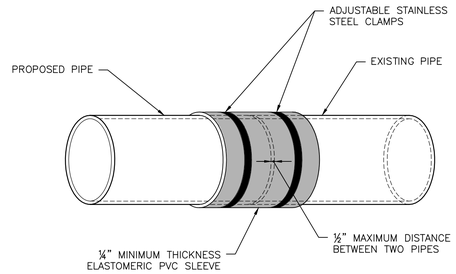

NOTE:

1. USE WHERE NEW PIPE MEETS EXISTING PIPE OR AS NEEDED.
2. PROPOSED PIPE MAY HAVE AN OUTSIDE DIAMETER (O.D.) THAT IS DIFFERENT THAN THE O.D. OF THE EXISTING PIPE. THE CONTRACTOR SHALL VERIFY THE O.D. PRIOR TO ORDERING THE COUPLING.

FLEXIBLE PIPE COUPLING DETAIL

NOT TO SCALE

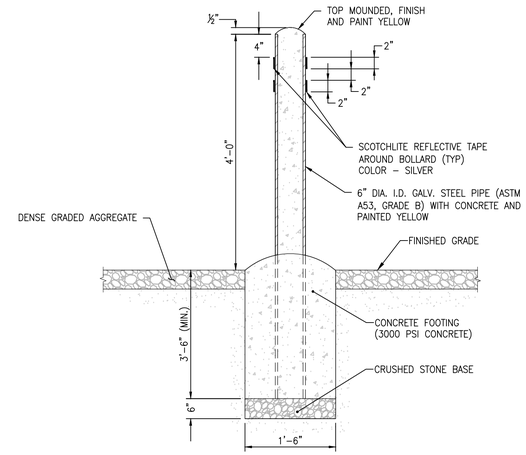

STEEL BOLLARD DETAIL

NOT TO SCALE

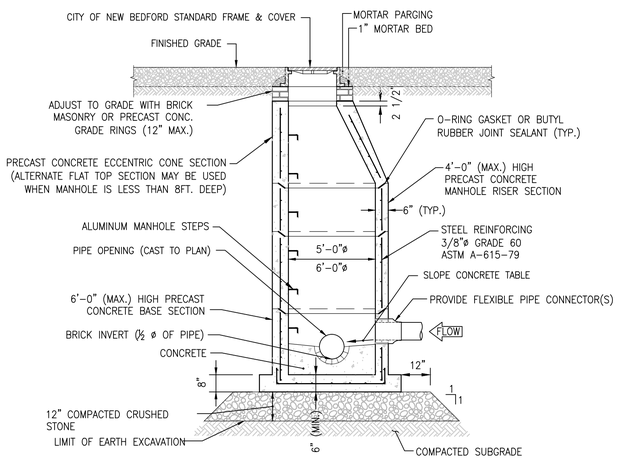

NOTE:

PRECAST MANHOLE TO MEET ASTM C-478 SPECIFICATIONS

PRECAST 5' AND 6' DIAMETER DRAIN MANHOLE DETAIL

NOT TO SCALE

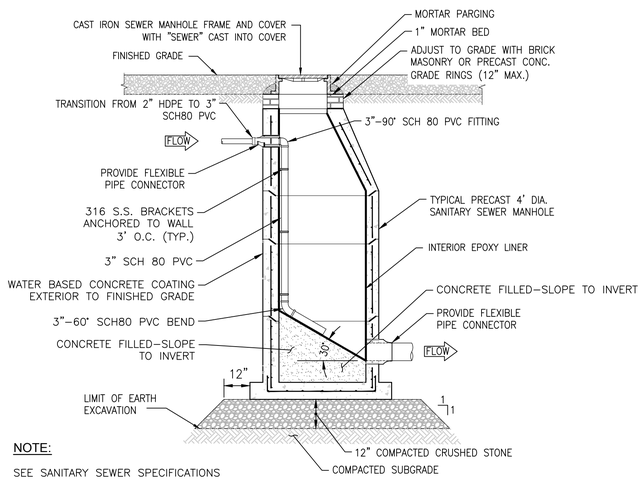

NOTE:

SEE SANITARY SEWER SPECIFICATIONS

PRECAST SANITARY SEWER FORCE MAIN MANHOLE DETAIL

NOT TO SCALE

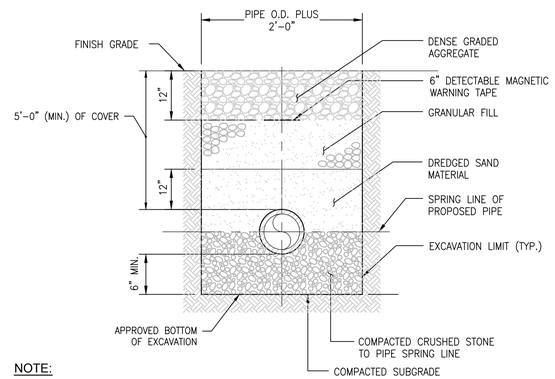

NOTE:

1. ALL UNDERGROUND WATER SERVICE PIPES SHALL HAVE A MINIMUM OF 5' OF COVER. PIPES WITH LESS THAN 5' OF COVER, INCLUDING PIPES IN THE UTILITY TRENCH, SHALL HAVE A 1" (MIN.) OF PIPE INSULATION WITH A HEATING TRACING WIRE PRE-INSTALLED BY THE PIPE MANUFACTURER. (SEE SPECIFICATIONS)

UNDERGROUND WATER SERVICE PIPE TRENCH DETAIL

NOT TO SCALE

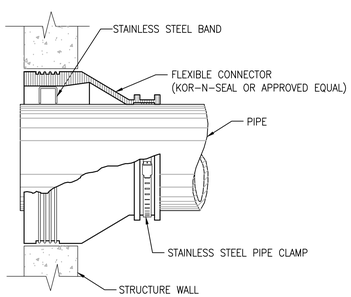

FLEXIBLE PIPE CONNECTOR DETAIL

NOT TO SCALE

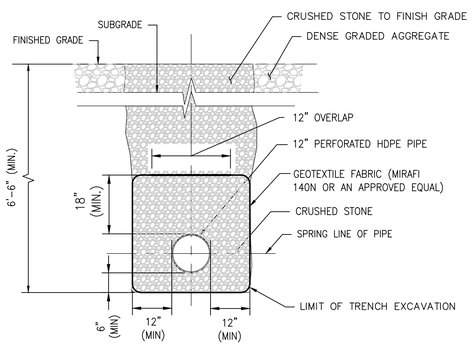

INFILTRATION TRENCH DETAIL

NOT TO SCALE

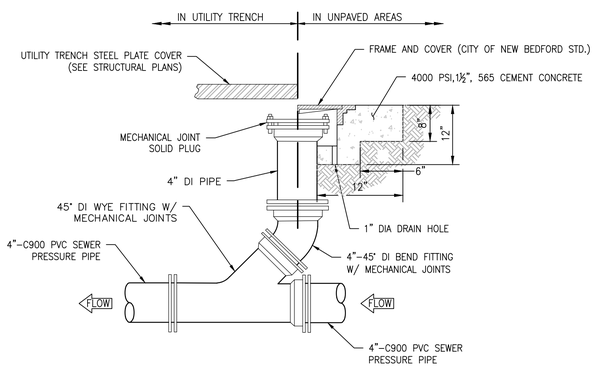

SANITARY SEWER CLEANOUT DETAIL

NOT TO SCALE

APEX

ROCKVILLE, MD
SOUTH WINDSOR, CT - BOSTON, MA - NEW BEDFORD, MA - HOLYOKE, MA

184 HIGH STREET, SUITE 502
BOSTON, MA 02210

58H CONNECTICUT AVENUE
SOUTH WINDSOR, CT

This drawings prepared by Apex for this project are instruments of Apex's service for use solely with respect to this project, and Apex shall be deemed the author of the Drawing and shall retain all common law, statutory and other reserved rights with respect thereto, including the copyright. The Documents shall not be used on other projects, for additions to this project or for completion of this project by others, except by agreement in writing and with appropriate compensation to Apex. .

Maguire Group Inc.
Architects / Engineers / Planners
225 Chapman Street, 4th Floor
Providence,Rhode Island 02905
401-272-6000
www.maguiregroup.com

PROJECT
NEW BEDFORD MARINE COMMERCE TERMINAL

OWNER
MASSACHUSETTS CLEAN ENERGY CENTER
55 SUMMER STREET, 9TH FLOOR
BOSTON, MASSACHUSETTS

NO.	DATE	DESCRIPTION	BY

PROJECT NO.	6690
CADD FILE	
DESIGNED BY	JTS
DRAWN BY	JTS
CHECKED BY	JAJ
DATE	11/295/11
DRAWING SCALE	1"=50'

GRAPHIC SCALE

AS SHOWN

SHEET TITLE

UTILITY DETAILS 3

100% DESIGN ADDENDUM
DECEMBER 16, 2011

DRAWING NO.

D-3
DRAFT

NOT FOR CONSTRUCTION

PLOT SCALE 1/16"=1'-0"

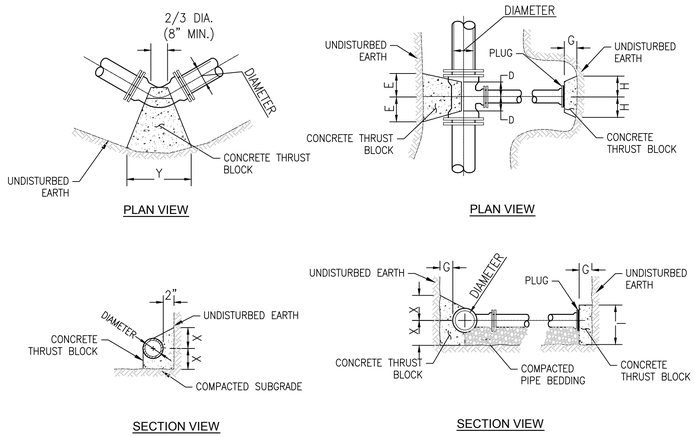

DIMENSIONS-HORIZONTAL BENDS

TYPE OF BEND	SIZE 3", 4" X	3", 4" Y	6", 8" X	6", 8" Y
11-1/4°	0'-6"	1'-0"	1'-0"	1'-3"
22-1/2°	0'-9"	1'-0"	1'-3"	2'-0"
45°	0'-9"	1'-9"	1'-6"	3'-3"
90°	1'-0"	2'-0"	2'-0"	4'-6"

DIMENSIONS-HORIZONTAL TEES & DEAD ENDS

SIZE OF BRANCH	D	E	F	G	H	I
3", 4"	8"	1'-0"	1'-0"	1'-0"	2'-0"	2'-0"
6", 8"	10"	2'-0"	1'-6"	1'-0"	4'-0"	3'-0"
10", 12"	1'-0"	3'-0"	2'-6"	1'-2"	6'-0"	5'-0"

HORIZONTAL THRUST BLOCK DETAILS

NOT TO SCALE

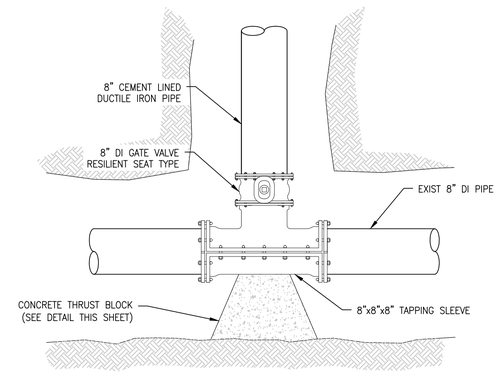

TAPPING SLEEVE AND GATE VALVE DETAIL

NOT TO SCALE

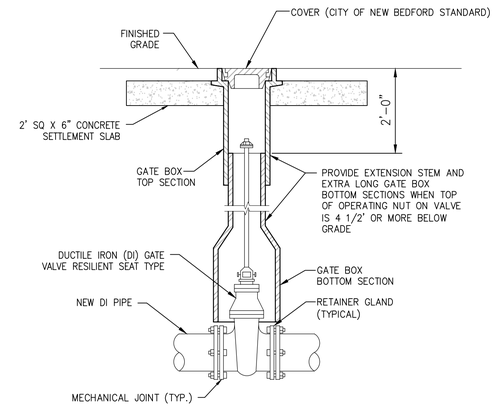

TYPICAL GATE VALVE AND VALVE BOX DETAIL

NOT TO SCALE

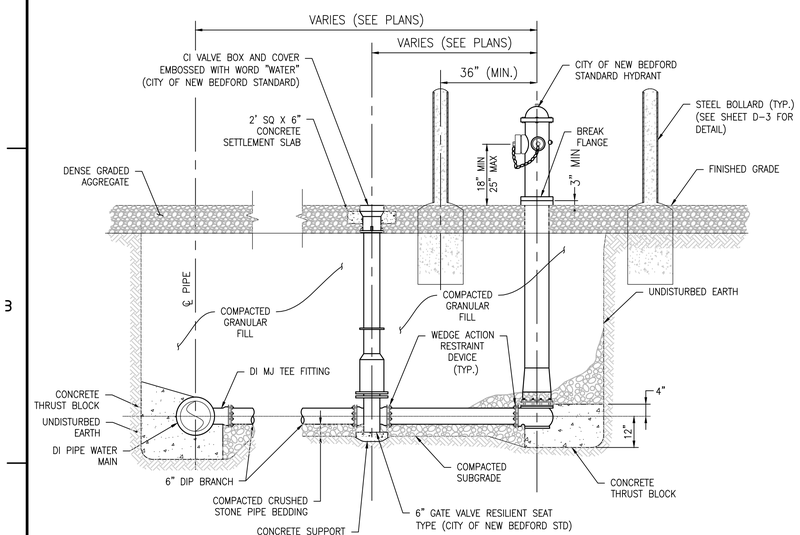

NOTE:

1. CONCRETE THRUST BLOCKS TO BE USED ONLY WHERE IT WILL BEAR ON UNDISTURBED EARTH. USE RESTRAINED JOINT FITTINGS (MEGALUG ORAPPROVED EQUAL) WHERE CONCRETE THRUST BLOCK IS UNACCEPTABLE. SIZE OF BLOCK OR MEGALUG TO BE DESIGNED.

FIRE HYDRANT DETAIL

NOT TO SCALE

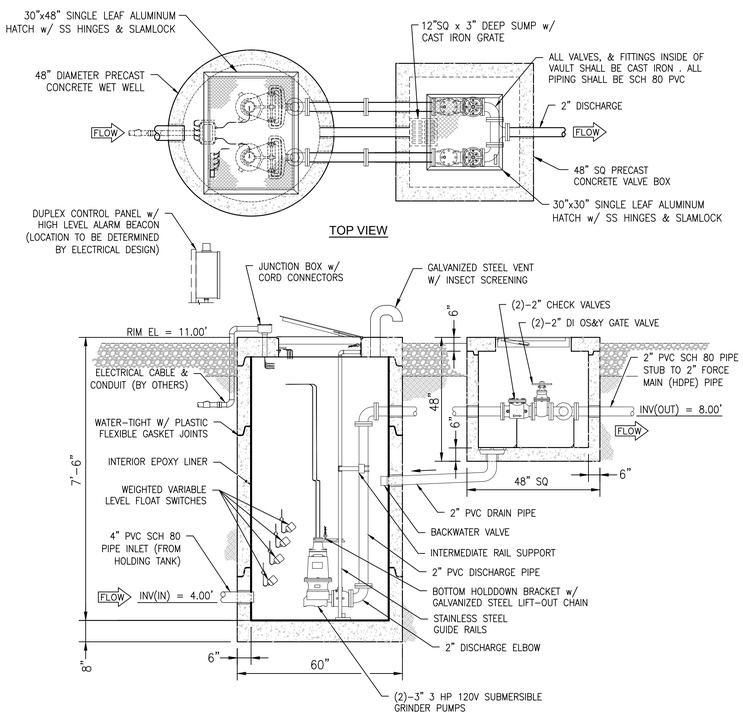

NOTES:

1. PRECAST CONCRETE: DESIGN STRENGTH OF 4500 PSI CONCRETE AT 28 DAYS. INSTALL NUMBER OF WETWELL RISER SECTIONS AS NEED TO MEET FINISH GRADE.
2. REINFORCEMENT: GRADE 60 STEEL REBAR CONFORMING TO ASTM A615 ON REQUIRED CENTERS OR EQUAL.
3. ALUMINUM HATCH: 300 PSF RATED, 1/4" ALUMINIUM SKID-RESISTANT FLOOR PLATE, STAINLESS STEEL TAMPERPROOF BOLTING & HINGES & SLAMLOCK.
4. PUMPS: PUMPS SHALL BE CENTRIFUGAL SOLIDS HANDLING TYPE WITH SUBMERSIBLE TYPE MOTOR. (SEE SPECIFICATIONS)
5. CONTROLS: PUMP CONTROLS SHALL BE MOUNTED INSIDE A UL LISTED NEMA-4X ENCLOSURE AND INCLUDE CIRCUIT BREAKERS, ALARM CIRCUIT FUSE, IEC RATED MOTOR STARTER, PUMP HOA, AND ALTERNATOR RELAY. PANEL SHALL HAVE A VISUAL ALARM BEACON. PANEL IS DESIGNED FOR REMOTE MOUNTING.

TYPICAL DUPLEX SANITARY SEWER PUMP STATION

NOT TO SCALE

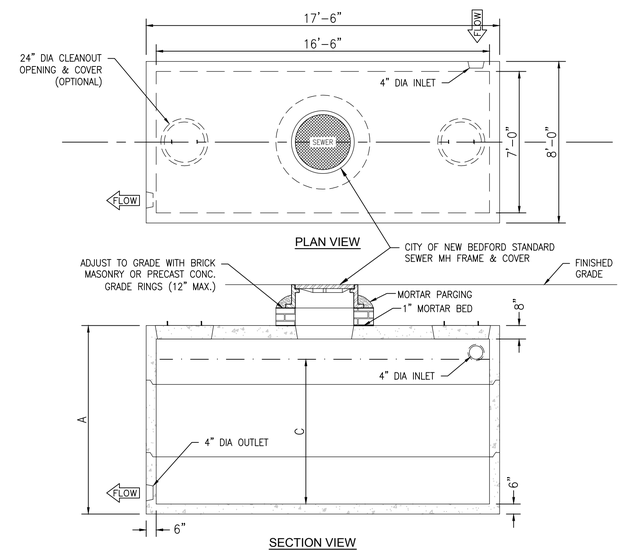

GALLONS	A (HEIGHT)	C (LIQUID)	WEIGHT (LBS)
2,500	63"	48'	40,770

NOTES:

1. CONCRETE: 5,000 PSI MINIMUM AFTER 28 DAYS.
2. REINFORCEMENT: STEEL REBAR CONFORMING TO ASTM C1227-93.
3. DESIGNED FOR H-20 LOADING
4. TONGUE AND GROOVE JOINT SEALED WITH BUTYL RESIN. INLET HEIGHT MAY INCREASE SLIGHTLY DUE TO THE BUTYL RESIN USED.
5. SEE UTILITY PLAN (SHEET U-1) FOR PIPE INVERTS.

PRECAST CONCRETE HOLDING TANK DETAIL

NOT TO SCALE

APEX

ROCKVILLE, MD
SOUTH WINDSOR, CT - BOSTON, MA - NEW BEDFORD, MA - HOLYOKE, MA

184 HIGH STREET, SUITE 502
BOSTON, MA 02210

58H CONNECTICUT AVENUE
SOUTH WINDSOR, CT

This drawings prepared by Apex for this project are instruments of Apex's service for use solely with respect to this project, and Apex shall be deemed the author of the Drawing and shall retain all common law, statutory and other reserved rights with respect thereto, including the copyright. The Documents shall not be used on other projects, for additions to this project or for completion of this project by others, except by agreement in writing and with appropriate compensation to Apex. .

Maguire Group Inc.
Architects / Engineers / Planners
225 Chapman Street, 4th Floor
Providence,Rhode Island 02905
401-272-6000
www.maguiregroup.com

PROJECT
NEW BEDFORD MARINE COMMERCE TERMINAL

OWNER
MASSACHUSETTS CLEAN ENERGY CENTER
55 SUMMER STREET, 9TH FLOOR
BOSTON, MASSACHUSETTS

NO.	DATE	DESCRIPTION	BY

PROJECT NO.	6690
CADD FILE	
DESIGNED BY	JTS
DRAWN BY	JTS
CHECKED BY	JAJ
DATE	11/29/11
DRAWING SCALE	1"=50'

GRAPHIC SCALE

AS SHOWN

SHEET TITLE

UTILITY DETAILS 4

100% DESIGN ADDENDUM
DECEMBER 16, 2011

DRAWING NO.

D-4
DRAFT

NOT FOR CONSTRUCTION

PLOT SCALE 1/16"=1'-0"

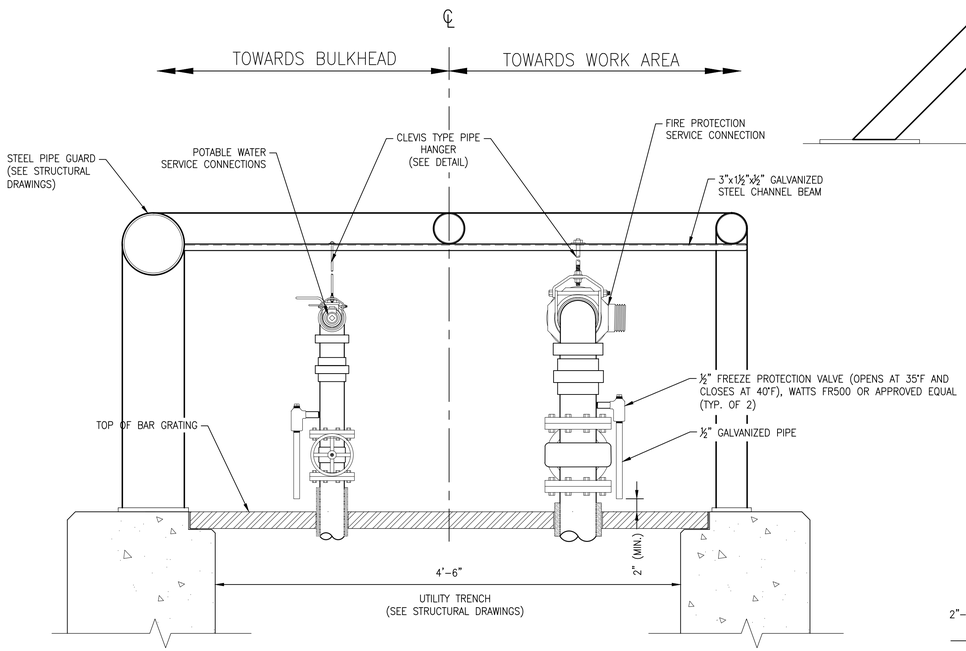

SIDE VIEW - LOOKING SOUTH

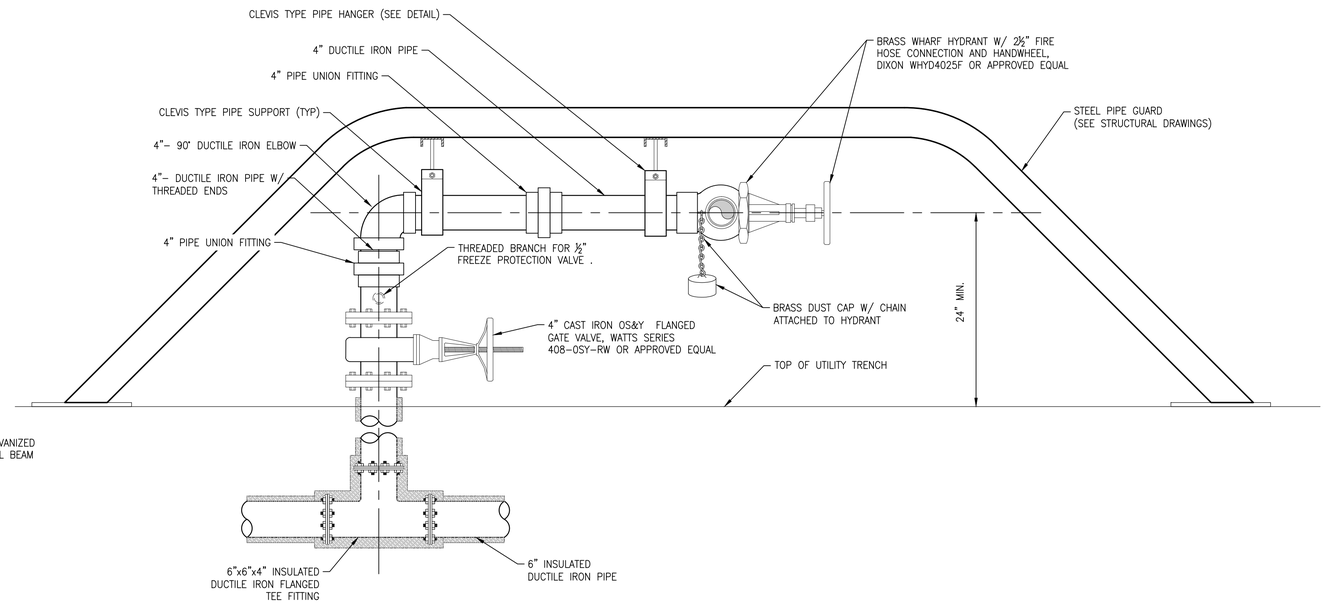

ELEVATION VIEW - LOOKING EAST

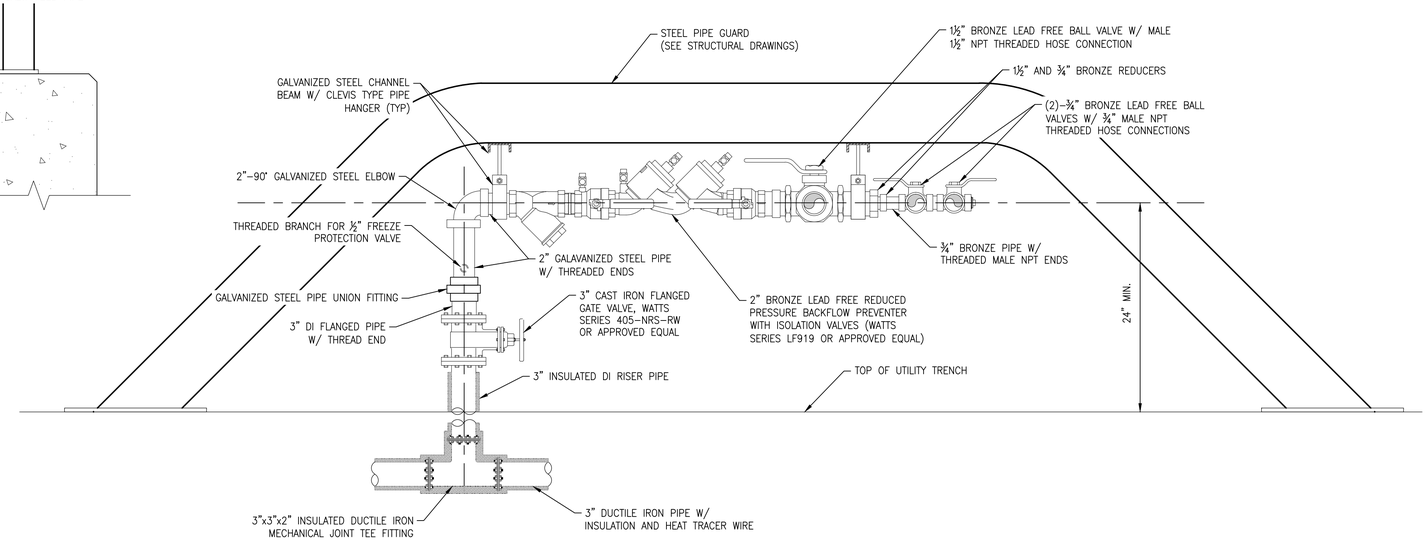

ELEVATION VIEW - LOOKING WEST

NOTES:

1. CONTRACTOR SHALL NOT FABRICATE ANY MATERIAL OR INSTALL ANY COMPONENTS PRIOR TO VERIFICATION OF CLEARANCES.
2. CONTRACTOR SHALL FIELD VERIFY ALL DIMENSIONS PRIOR TO BEGINNING WORK.
3. LOCATION OF PIPE SUPPORTS TO BE DETERMINED BY THE CONTRACTOR IN THE FIELD.
4. PRESSURE TEST ALL WATER AND SANITARY SEWER FOR A MINIMUM OF TWO HOURS WITH NO LOSS IN PRESSURE IN ACCORDANCE WITH THE LATEST EDITION OF THE INTERNATIONAL PLUMBING CODE.
5. SANITIZE ALL POTABLE WATER LINES IN ACCORDANCE WITH AWWA C651. PROVIDE DOCUMENTED LAB TEST RESULTS FROM A CERTIFIED LABORATORY.
6. STEEL PIPE GUARD TO BE PAINTED YELLOW.
7. ALL SHIP-TO-SHORE POTABLE WATER COMPONENTS TO BE PAINTED DARK BLUE.
8. ALL SHIP-TO-SHORE FIRE PROTECTION COMPONENTS TO BE PAINTED RED.

SHIP-TO-SHORE POTABLE WATER AND FIRE PROTECTION DETAILS

NOT TO SCALE

APEX

ROCKVILLE, MD
SOUTH WINDSOR, CT - BOSTON, MA - NEW BEDFORD, MA - HOLYOKE, MA

184 HIGH STREET, SUITE 502
BOSTON, MA 02210

58H CONNECTICUT AVENUE
SOUTH WINDSOR, CT

This drawings prepared by Apex for this project are instruments of Apex's service for use solely with respect to this project, and Apex shall be deemed the author of the Drawing and shall retain all common law, statutory and other reserved rights with respect thereto, including the copyright. The Documents shall not be used on other projects, for additions to this project or for completion of this project by others, except by agreement in writing and with appropriate compensation to Apex. .

Maguire Group Inc.
Architects / Engineers / Planners
225 Chapman Street, 4th Floor
Providence,Rhode Island 02905
401-272-6000
www.maguiregroup.com

PROJECT
NEW BEDFORD MARINE COMMERCE TERMINAL

OWNER
MASSACHUSETTS CLEAN ENERGY CENTER
55 SUMMER STREET, 9TH FLOOR
BOSTON, MASSACHUSETTS

NO.	DATE	DESCRIPTION	BY

PROJECT NO.	6690
CADD FILE	
DESIGNED BY	JTS
DRAWN BY	JTS
CHECKED BY	JAJ
DATE	11/29/11
DRAWING SCALE	1"=50'

GRAPHIC SCALE

AS SHOWN

SHEET TITLE

UTILITY DETAILS 5

100% DESIGN ADDENDUM
DECEMBER 16, 2011

DRAWING NO.

D-5
DRAFT

NOT FOR CONSTRUCTION

PLOT SCALE 1/16"=1'-0"

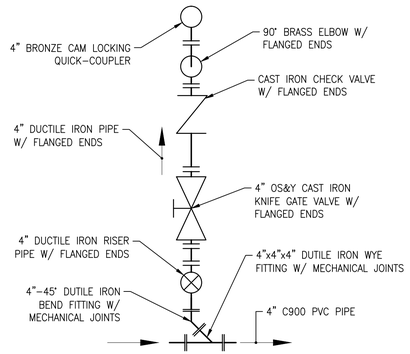

SANITARY SEWER

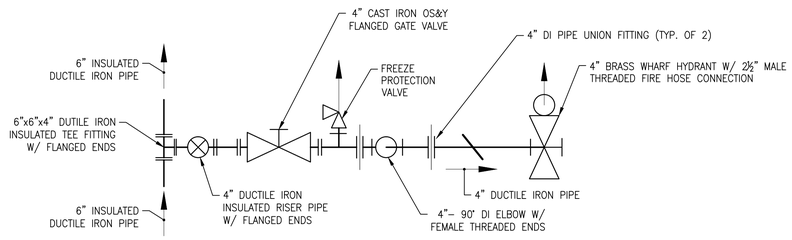

FIRE PROTECTION

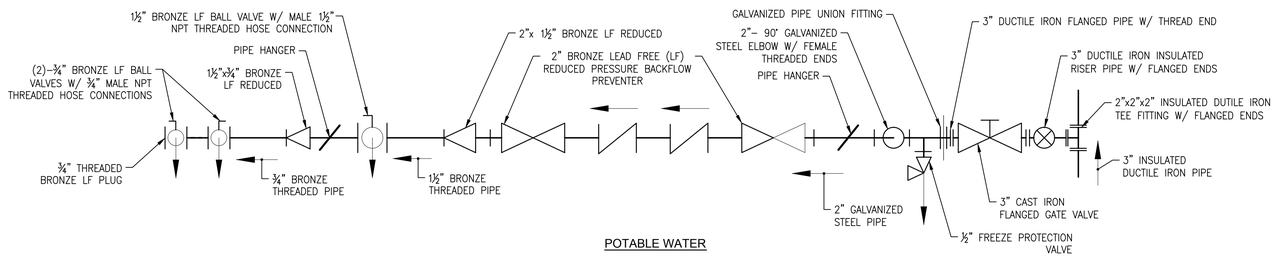

POTABLE WATER

SHIP-TO-SHORE PIPING DIAGRAMS

NOT TO SCALE

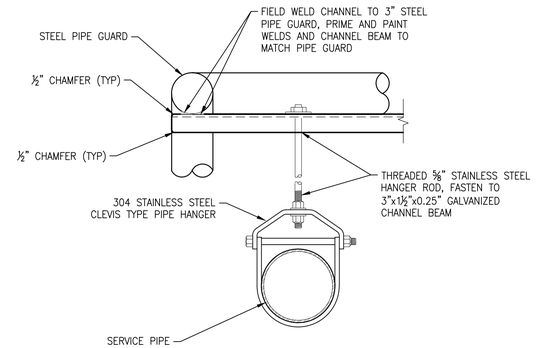

PIPE SUPPORT DETAIL

NOT TO SCALE

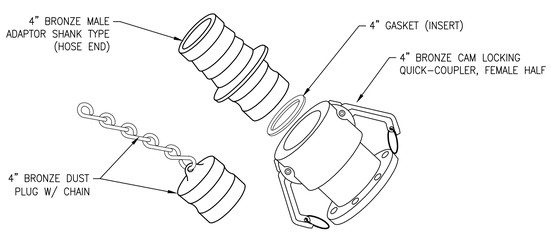

SHIP-TO-SHORE SEWAGE HOSE CONNECTION

NOT TO SCALE

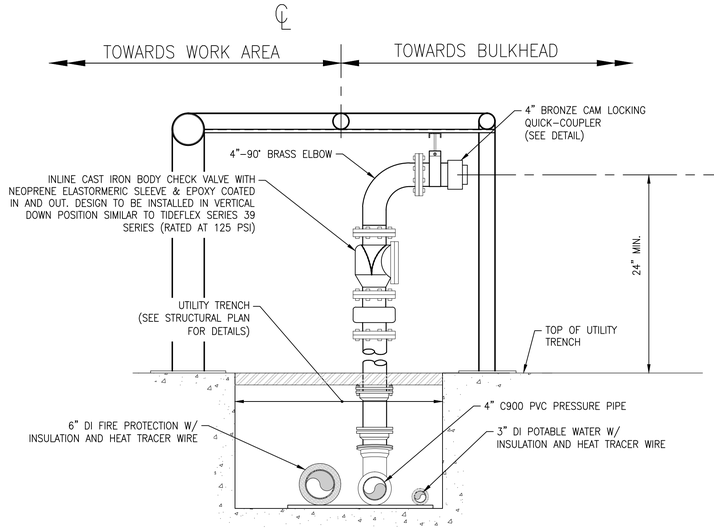

SIDE VIEW-LOOKING NORTH

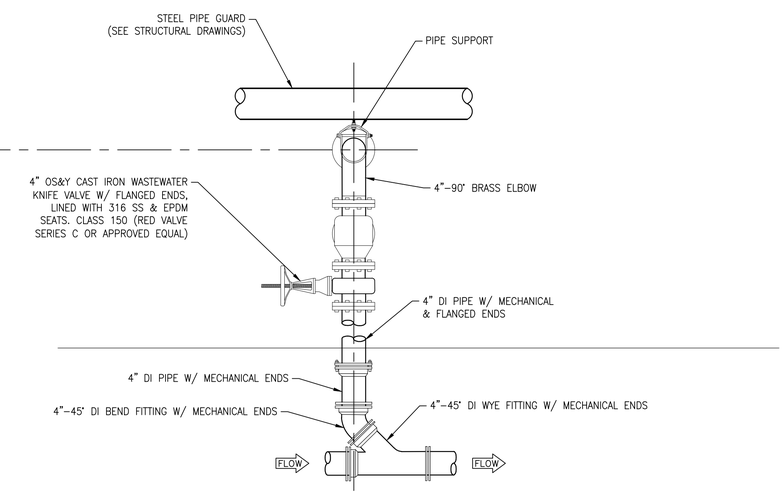

ELEVATION VIEW

NOTES:

1. CONTRACTOR SHALL NOT FABRICATE ANY MATERIAL OR INSTALL ANY EQUIPMENT PRIOR TO VERIFICATION OF CLEARANCES.
2. CONTRACTOR SHALL FIELD VERIFY ALL DIMENSIONS PRIOR TO BEGINNING WORK.
3. LOCATION OF PIPE SUPPORTS TO BE DETERMINED BY THE CONTRACTOR IN THE FIELD.
4. ALL SHIP-TO-SHORE SANITARY SEWER COMPONENTS TO BE PAINTED GOLD.

SHIP-TO-SHORE SANITARY SEWAGE DETAIL

NOT TO SCALE

APEX

ROCKVILLE, MD
SOUTH WINDSOR, CT - BOSTON, MA - NEW BEDFORD, MA - HOLYOKE, MA

184 HIGH STREET, SUITE 502
BOSTON, MA 02210

58H CONNECTICUT AVENUE
SOUTH WINDSOR, CT

This drawings prepared by Apex for this project are instruments of Apex's service for use solely with respect to this project, and Apex shall be deemed the author of the Drawing and shall retain all common law, statutory and other reserved rights with respect thereto, including the copyright. The Documents shall not be used on other projects, for additions to this project or for completion of this project by others, except by agreement in writing and with appropriate compensation to Apex. .

Maguire Group Inc.
Architects / Engineers / Planners
225 Chapman Street, 4th Floor
Providence,Rhode Island 02905
401-272-6000
www.maguiregroup.com

PROJECT
NEW BEDFORD MARINE COMMERCE TERMINAL

OWNER
MASSACHUSETTS CLEAN ENERGY CENTER
55 SUMMER STREET, 9TH FLOOR
BOSTON, MASSACHUSETTS

NO.	DATE	DESCRIPTION	BY

PROJECT NO.	6690
CADD FILE	
DESIGNED BY	JTS
DRAWN BY	JTS
CHECKED BY	JAJ
DATE	11/29/11
DRAWING SCALE	1"=50'

GRAPHIC SCALE

AS SHOWN

SHEET TITLE

UTILITY DETAILS 6

100% DESIGN ADDENDUM
DECEMBER 16, 2011

DRAWING NO.

D-6
DRAFT

NOT FOR CONSTRUCTION

PLOT SCALE 1/16"=1'-0"

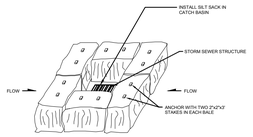

STRAWBALE INSTALLATION AT CATCH BASINS

NTS

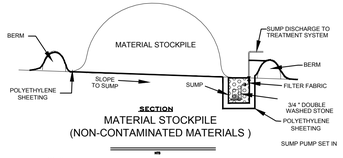

SECTION

MATERIAL STOCKPILE (NON-CONTAMINATED MATERIALS)

NTS

NOTES:
1. SHEETING SHALL BE PLACED BELOW STOCKPILES.
2. BERMS SHALL ENCIRCLE ENTIRE STOCKPILE AND EDGE OF BOTTOM SHEETING SHALL BE PLACED OVER BERM.
3. CONTRACTOR MAY PROPOSE ALTERNATE METHODOLOGY FOR DEWATERING STOCKPILE MATERIALS AND ALTERNATE METHODOLOGIES TO CONTROL THE FLOW OF DEWATERING FLUIDS AND DIRECT DEWATERING FLUIDS TO A TREATMENT SYSTEM

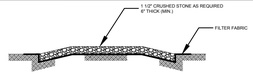

SECTION

ANTI-TRACKING PAD

NOT TO SCALE

NOTES:
1. ANTI-TRACKING PAD TO BE REMOVED BY THE CONTRACTOR AFTER THE COMPLETION OF CONSTRUCTION (SEE SPECIFICATIONS FOR DETAILS).
2. FILTER FABRIC SHALL BE INSTALLED BELOW ANTI-TRACKING PAD.

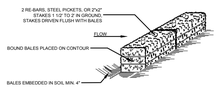

HAY BALE

NTS

NOTES:
1. BALES SHALL BE PLACED AS SHOWN ON THE PROJECT DRAWINGS.
2. EACH BALE SHALL BE PLACED SO THE ENDINGS ARE HORIZONTAL.
3. EACH BALE SHALL BE SECURELY ANCHORED IN PLACE BY EITHER TWO STAKES OR RE-BARS THE PROVIDED THROUGH THE BALE. AT LEAST FIRST STAKE IN EACH BALE SHALL BE DRIVEN TOWARD THE PREVIOUS BALE. USE SLEDGE HAMMER TO FORCE THE BALES TOGETHER. STAKES SHALL BE DRIVEN FLUSH WITH THE BALE.
4. INSPECTION SHALL BE FREQUENT AND REPAIR REPLACEMENT SHALL BE PROMPT (WHEN NEEDED).
5. BALES SHALL BE REMOVED WHEN THEY HAVE SERVED THEIR USEFULNESS
6. SILT FENCING TO BE PLACED DOWN-GRADIENT OF HAY BALES

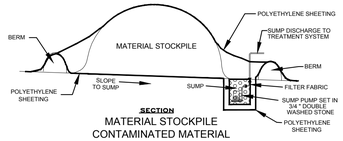

SECTION

MATERIAL STOCKPILE CONTAMINATED MATERIAL

NTS

NOTES:
1. SHEETING SHALL BE PLACED BELOW STOCKPILES.
2. BERMS SHALL ENCIRCLE ENTIRE STOCKPILE AND EDGE OF BOTTOM SHEETING SHALL BE PLACED OVER BERM.
3. SHEETING SHALL BE PLACED OVER STOCKPILE.

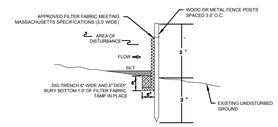

SECTION

SILT FENCE

NTS

NOTES:
1. SILT FENCING SHALL BE PLACED AS SHOWN ON PROJECT DRAWINGS.
2. BOTTOM 1.0' OF SILT FENCING SHALL BE BURIED IN 6" X 6" TRENCH DUG AT BASE OF FENCING.
3. SILT FENCING SHALL BE ANCHORED IN PLACE WITH WOODEN OR METAL FENCE POSTS SPACED AT 3.0'T. O.C.
4. INSPECTION SHALL BE FREQUENT AND REPAIR REPLACEMENT SHALL BE PROMPT (WHEN NEEDED).
5. SILT FENCING SHALL BE REMOVED WHEN IT HAS SERVED ITS USEFULNESS.
6. SILT FENCING TO BE PLACED DOWN-GRADIENT OF HAY BALES.

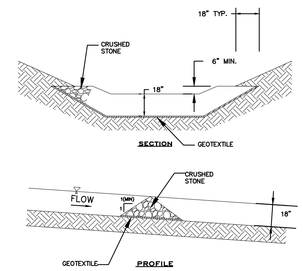

STONE CHECK DAM

NOT TO SCALE

SECTION (TYP.)

STORMWATER DRAINAGE SWALE EROSION CONTROL DETAIL

NTS

REFER TO SPECIFICATIONS FOR MATERIAL AND PLACEMENT REQUIREMENTS

NOTES:

1. SEE SPECIFICATION SECTION 02800 FOR INSTALLATION DETAILS.
2. HOLE MEASUREMENTS SHOWN ON POSTS ARE VERTICAL MEASUREMENTS. HOLE WIDTHS SHALL BE DETERMINED BY MANUFACTURER.
3. POSTS SHALL BE ADJUSTED TO PLUMB DURING COMPACTION OF ON SITE SOIL BACKFILL.

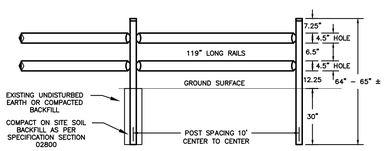

SPLIT RAIL FENCE DETAIL

NTS

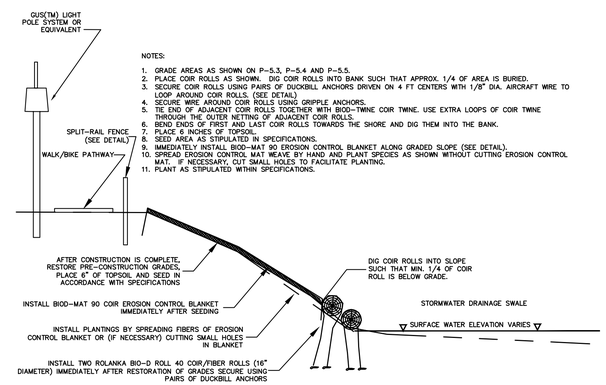

NOTES:

1. GRADE AREAS AS SHOWN ON P-5.3, P-5.4 AND P-5.5.
2. PLACE COIR ROLLS AS SHOWN. DIG COIR ROLLS INTO BANK SUCH THAT APPROX. 1/4 OF AREA IS BURIED.
3. SECURE COIR ROLLS USING PAIRS OF DUCKBILL ANCHORS DRIVEN ON 4 FT CENTERS WITH 1/8" DIA. AIRCRAFT WIRE TO LOOP AROUND COIR ROLLS. (SEE DETAIL)
4. SECURE WIRE AROUND COIR ROLLS USING GRIPPLE ANCHORS.
5. TIE END OF ADJACENT COIR ROLLS TOGETHER WITH BIOD-TWINE COIR TWINE. USE EXTRA LOOPS OF COIR TWINE THROUGH THE OUTER NETTING OF ADJACENT COIR ROLLS.
6. BEND ENDS OF FIRST AND LAST COIR ROLLS TOWARDS THE SHORE AND DIG THEM INTO THE BANK.
7. PLACE 6 INCHES OF TOPSOIL.
8. SEED AREA AS STIPULATED IN SPECIFICATIONS.
9. IMMEDIATELY INSTALL BIOD-MAT 90 EROSION CONTROL BLANKET ALONG GRADED SLOPE (SEE DETAIL).
10. SPREAD EROSION CONTROL MAT WEAVE BY HAND AND PLANT SPECIES AS SHOWN WITHOUT CUTTING EROSION CONTROL MAT. IF NECESSARY, CUT SMALL HOLES TO FACILITATE PLANTING.
11. PLANT AS STIPULATED WITHIN SPECIFICATIONS.

DETAIL NOTES:
1. ANCHOR MAT IN A 6"x6" TRENCH AT TOP OF SLOPE. PLACE BLANKET, STAPLE AND BACKFILL.
2. ROLL BLANKET DOWN SLOPE, ENSURING GOOD CONTACT BETWEEN BLANKET AND SLOPE. STAPLE EDGES AT 1.5'-2' INTERVALS.
3. OVERLAP SUCCESSIVE ROLLS BY 8", STAPLE AS SHOWN.
4. OVERLAP SIDES BY 6" STAPLE AS SHOWN.
5. STAPLE CENTER OF BLANKET ACCORDING TO PATTERN SHOWN.
6. USE STAPLES OF GAUGE 11, 8" LONG.
7. ANCHOR BOTTOM OF BLANKET WITH COIR ROLL.

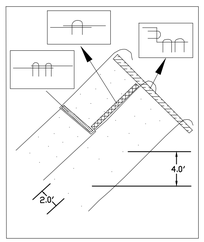

SECTION (TYP.)

COIR MAT DETAIL

NTS

REFER TO SPECIFICATIONS FOR MATERIAL AND PLACEMENT REQUIREMENTS

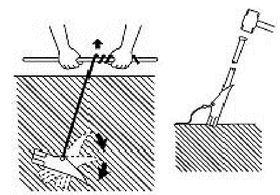

DETAIL NOTES:
1. ANCHORS TO BE FORESIGHT PRODUCTS, LLC 68-DB1 OR SIMILAR
2. ANCHORS TO BE DRIVEN IN PAIRS ON OPPOSITE SIDES OF COIR ROLL.
3. MINIMUM INSTALLATION DEPTH: 30 INCHES.
4. HAMMER IN PLACE USING DRIVE STEEL MODEL DS-68.
5. HAMMER ALONG ANGLE OF ANTICIPATED FORCES ALONG THE WIRE.
6. USE FULCRUM, MANUAL, OR HYDRAULIC METHODOLOGY TO SET ANCHOR.
7. ADDITIONAL 1/8" DIA. AIRCRAFT WIRE TO BE UTILIZED AS NECESSARY TO LOOP FROM ONE ANCHOR, AROUND COIR ROLL, TO OTHER ANCHOR.
8. GRIPPLIE ANCHORS TO BE USED TO ATTACH CABLES AFTER TIGHTENING TO HOLD COIR ROLL IN PLACE.

DUCKBILL ANCHOR DETAIL

NTS

REFER TO SPECIFICATIONS FOR MATERIAL AND PLACEMENT REQUIREMENTS

APEX

ROCKVILLE, MD
SOUTH WINDSOR, CT - BOSTON, MA - NEW BEDFORD, MA - HOLYOKE, MA

184 HIGH STREET, SUITE 502
BOSTON, MA 02210

58H CONNECTICUT AVENUE
SOUTH WINDSOR, CT

This drawings prepared by Apex for this project are instruments of Apex's service for use solely with respect to this project, and Apex shall be deemed the author of the Drawing and shall retain all common law, statutory and other reserved rights with respect thereto, including the copyright. The Documents shall not be used on other projects, for additions to this project or for completion of this project by others, except by agreement in writing and with appropriate compensation to Apex.

PROJECT

NEW BEDFORD MARINE COMMERCE TERMINAL

OWNER

MASSACHUSETTS CLEAN ENERGY CENTER
55 SUMMER STREET, 9TH FLOOR
BOSTON, MASSACHUSETTS

NO.	DATE	DESCRIPTION	BY

PROJECT NO.	6690
CADD FILE	TITTLE_DTL
DESIGNED BY	CHM
DRAWN BY	CHM
CHECKED BY	CWM
DATE	7/30/11
DRAWING SCALE	NTS

GRAPHIC SCALE

NOT TO SCALE

SHEET TITLE

EROSION, SEDIMENTATION CONTROLS AND DEWATERING DETAILS

DRAWING NO.

D-7

DRAFT

P:\Jobs\6690 NBH_ Phase IV\PLANS\FINAL_PLANS\100% Submittal\T-1_T-2_T-3_D-5_D-6_D-7_TITLE_DETAILS.dwg

THIS PAGE HAS BEEN
INTENTIONALLY LEFT BLANK

APEX

ROCKVILLE, MD
SOUTH WINDSOR, CT - BOSTON, MA -
NEW BEDFORD, MA - HOLYOKE, MA

184 HIGH STREET, SUITE 502
BOSTON, MA 02210

58H CONNECTICUT AVENUE
SOUTH WINDSOR, CT

This drawings prepared by Apex for this project are instruments of Apex's service for use solely with respect to this project, and Apex shall be deemed the author of the Drawing and shall retain all common law, statutory and other reserved rights with respect thereto, including the copyright. The Documents shall not be used on other projects, for additions to this project or for completion of this project by others, except by agreement in writing and with appropriate compensation to Apex.

PROJECT

NEW BEDFORD
MARINE COMMERCE
TERMINAL

OWNER

MASSACHUSETTS CLEAN ENERGY CENTER
55 SUMMER STREET, 9TH FLOOR
BOSTON, MASSACHUSETTS

NO.	DATE	DESCRIPTION	BY

PROJECT NO.	6690
CADD FILE	TITLE_DETAILS
DESIGNED BY	CHM
DRAWN BY	CHM
CHECKED BY	CWM
DATE	7/30/11
DRAWING SCALE	NTS

GRAPHIC SCALE

NOT TO SCALE

SHEET TITLE

STORMWATER
DRAINAGE SWALE
MITIGATION AREA
RESTORATION
DETAILS

DRAWING NO.

D-8
DRAFT

P:\Jobs\6690 NBH_ Phase II\PLANS\FINAL_PLANS\100% Submittal\T-1_T-2_T-3_D-5_D-6_D-7_TITLE_DETAILS.dwg

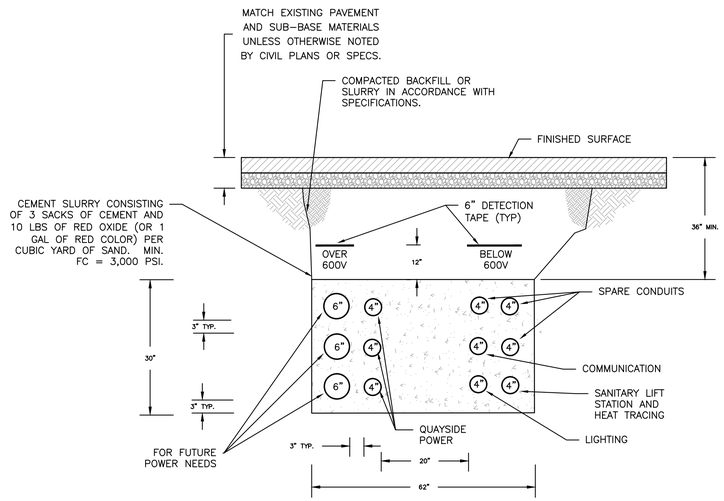

12 CONDUIT DUCT BANK

NTS

NOTES:

1). CONDUIT TO BE SCHEDULE 40 PVC.
2). 3" SPACING BETWEEN CONDUITS.
3). PROVIDE UL LISTED DUCT BANK SPACER/SUPPORTS. SECURE CONDUIT AT 4 FOOT INTERVALS.
4). FOR LOCATION, SEE CONTRACT DRAWING U-2.

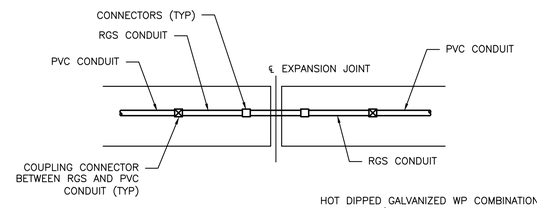

HOT DIPPED GALVANIZED WP COMBINATION DEFLECTION/EXPANSION FITTINGS, WHICH PROVIDES 3/4" MOVEMENT IN ALL DIRECTIONS, AND TOTAL OF 8" HORIZONTAL MOVEMENT. "OZ GEDNEY" CAT#AX-8-DX-(TRADE SIZE INCHES ON CORRESPONDING TO CONDUIT SIZE ON PLANS) PROVIDE APPROPRAITE BONDING JUMPERS

CONDUIT AT EXPANSION JOINTS

NTS

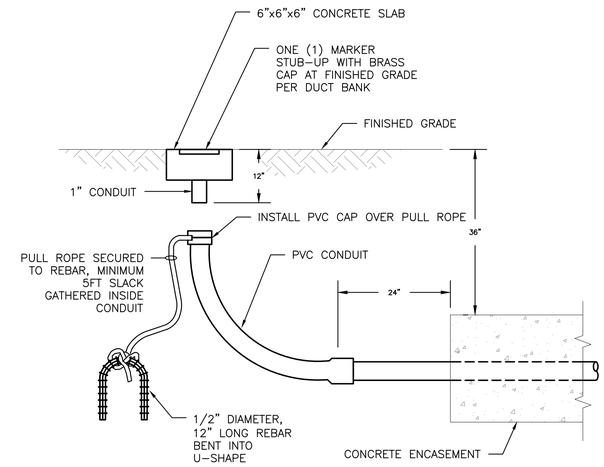

CONDUIT STUB

NTS

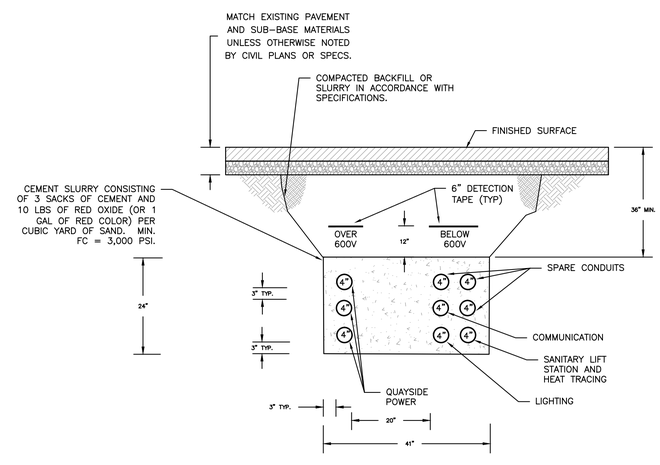

9 CONDUIT DUCT BANK

NTS

NOTES:

1). CONDUIT TO BE SCHEDULE 40 PVC.
2). 3" SPACING BETWEEN CONDUITS.
3). PROVIDE UL LISTED DUCT BANK SPACER/SUPPORTS. SECURE CONDUIT AT 4 FOOT INTERVALS.
4). FOR LOCATION SEE CONTRACT DRAWING U-2.

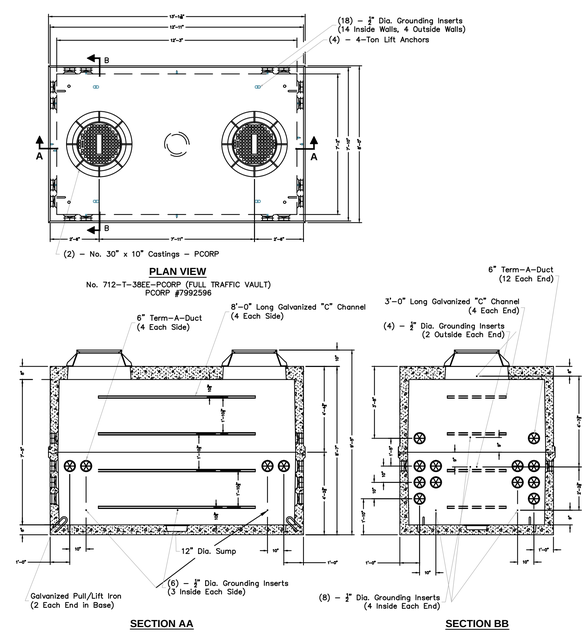

PRECAST ELECTRICAL VAULT PLAN AND SECTIONS

NTS

NOTES:

1). VAULT TO BE OLDCASTLE PRECAST 712-PCORP FULL TRAFFIC VAULT, #7992596 OR SIMILAR.
2). MASTIC GASKET MATERIAL ALL VAULT JOINTS.
3). PRIOR TO INSTALLATION, VAULT TO BE EXTERIOR COATED WITH ASPHALTIC BITUMINOUS PAINT.
4). FROM A POINT NO LONGER THAN 50 FEET AWAY FROM VAULT, DUCT BANK PIPING MAY BEGIN DEFLECTING TO TERMINATE INTO VAULT.
5). UTILIZE FLEXIBLE RUBBER CONNECTORS TO CONNECT DUCT BANK PIPING TO VAULT OPENINGS. UTILIZE STAINLESS STEEL PIPE CLAMPS TO AFFIX RUBBER CONNECTORS TO DUCT BANK PIPING. MORTAR FILL AROUND PIPE CONNECTION.

NOTES:

1). FOR LOCATION PLAN, SEE CONTRACT DRAWING U-2.
2). ELECTRICAL DESIGN HAS NOT BEEN COMPLETED.
3). FOR ALL DUCT BANKS AND ASSOCIATED VAULTS AND CONNECTIONS SHOWN ON THIS DRAWING AND ON DRAWING U-2: ALL DUCT BANK AND VAULT PLANS AND CROSS-SECTIONS ARE FOR LAYOUT PURPOSES ONLY. DUCT BANKS AND VAULTS SHALL NOT BE UTILIZED AND ELECTRIC SHALL NOT BE RUN THROUGH THE DUCT BANKS OR VAULTS UNTIL AN ELECTRICAL ENGINEER REGISTERED IN THE COMMONWEALTH OF MASSACHUSETTS HAS FIRST DESIGNED THE ELECTRIC SYSTEM AND HAS ANALYZED WHETHER THE DUCT BANKS AND VAULTS SHOWN ARE SUFFICIENT TO SUPPORT THE SYSTEM AS DESIGNED, AND, ADDITIONALLY, HAS APPROVED INSTALLATION OF THE ELECTRIC SYSTEM IN WRITING.

APEX

ROCKVILLE, MD
SOUTH WINDSOR, CT - BOSTON, MA - NEW BEDFORD, MA - HOLYOKE, MA

184 HIGH STREET, SUITE 502
BOSTON, MA 02210

58H CONNECTICUT AVENUE
SOUTH WINDSOR, CT

This drawings prepared by Apex for this project are instruments of Apex's service for use solely with respect to this project, and Apex shall be deemed the author of the Drawing and shall retain all common law, statutory and other reserved rights with respect thereto, including the copyright. The Documents shall not be used on other projects, for additions to this project or for completion of this project by others, except by agreement in writing and with appropriate compensation to Apex.

PROJECT

NEW BEDFORD MARINE COMMERCE TERMINAL

OWNER

MASSACHUSETTS CLEAN ENERGY CENTER
55 SUMMER STREET, 9TH FLOOR
BOSTON, MASSACHUSETTS

NO.	DATE	DESCRIPTION	BY

PROJECT NO.	6690
CADD FILE	TITLE_DETAILS
DESIGNED BY	CHM
DRAWN BY	CHM
CHECKED BY	CWM
DATE	7/30/11
DRAWING SCALE	NTS

GRAPHIC SCALE

NOT TO SCALE

SHEET TITLE

ELECTRICAL DUCT BANK DETAILS

DRAWING NO.

D-9

DRAFT

P:\Jobs\6690 NBH_ Phase IV\PLANS\FINAL_PLANS\100% Submittal\T-1_T-2_T-3_D-5_D-6_D-7_TITLE_DETAILS.dwg

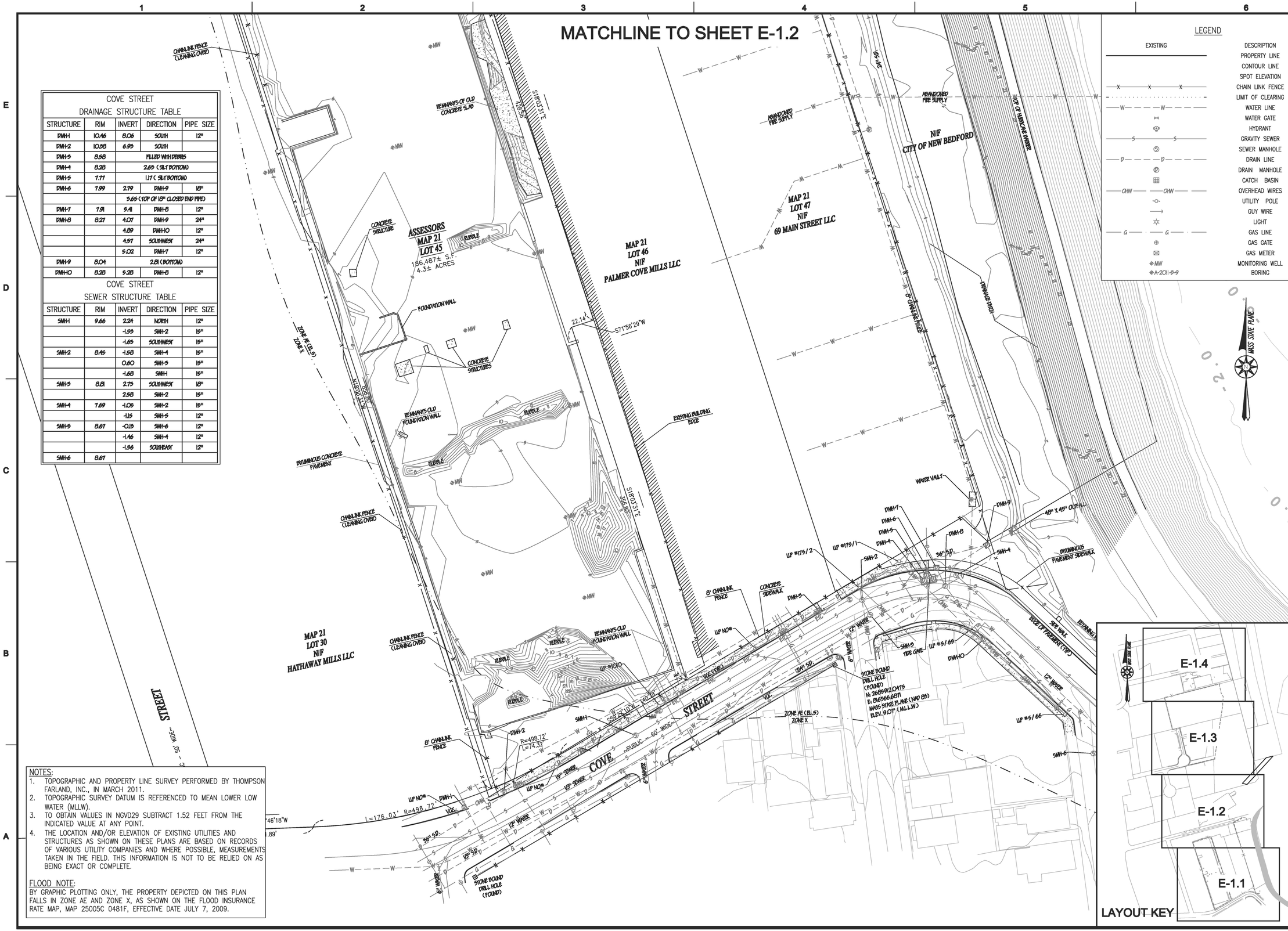

COVE STREET
DRAINAGE STRUCTURE TABLE

STRUCTURE	RIM	INVERT	DIRECTION	PIPE SIZE
DMH-1	10.46	8.06	SOUTH	12"
DMH-2	10.38	6.93	SOUTH	
DMH-3	8.58	FILLED WITH DEBRIS		
DMH-4	8.28	2.83 (SILT BOTTOM)		
DMH-5	7.77	1.17 (SILT BOTTOM)		
DMH-6	7.99	2.79	DMH-9	18"
		3.65 (TOP OF 18" CLOSED END PIPE)		
DMH-7	7.91	5.41	DMH-8	12"
DMH-8	8.27	4.07	DMH-9	24"
		4.89	DMH-10	12"
		4.97	SOUTHWEST	24"
		5.02	DMH-7	12"
DMH-9	8.04	2.81 (BOTTOM)		
DMH-10	8.28	5.28	DMH-8	12"

COVE STREET
SEWER STRUCTURE TABLE

STRUCTURE	RIM	INVERT	DIRECTION	PIPE SIZE
SMH-1	9.66	2.24	NORTH	12"
		-1.55	SMH-2	15"
		-1.65	SOUTHWEST	15"
SMH-2	8.45	-1.58	SMH-4	15"
		0.60	SMH-3	15"
		-1.68	SMH-1	15"
SMH-3	8.81	2.75	SOUTHWEST	15"
		2.58	SMH-2	15"
SMH-4	7.69	-1.05	SMH-2	15"
		-1.15	SMH-5	12"
SMH-5	8.67	-0.15	SMH-6	12"
		-1.46	SMH-4	12"
		-1.56	SOUTHEAST	12"
SMH-6	8.67			

NOTES:
1. TOPOGRAPHIC AND PROPERTY LINE SURVEY PERFORMED BY THOMPSON FARLAND, INC., IN MARCH 2011.
2. TOPOGRAPHIC SURVEY DATUM IS REFERENCED TO MEAN LOWER LOW WATER (MLLW).
3. TO OBTAIN VALUES IN NGVD29 SUBTRACT 1.52 FEET FROM THE INDICATED VALUE AT ANY POINT.
4. THE LOCATION AND/OR ELEVATION OF EXISTING UTILITIES AND STRUCTURES AS SHOWN ON THESE PLANS ARE BASED ON RECORDS OF VARIOUS UTILITY COMPANIES AND WHERE POSSIBLE, MEASUREMENTS TAKEN IN THE FIELD. THIS INFORMATION IS NOT TO BE RELIED ON AS BEING EXACT OR COMPLETE.

FLOOD NOTE:
BY GRAPHIC PLOTTING ONLY, THE PROPERTY DEPICTED ON THIS PLAN FALLS IN ZONE AE AND ZONE X, AS SHOWN ON THE FLOOD INSURANCE RATE MAP, MAP 25005C 0481F, EFFECTIVE DATE JULY 7, 2009.

APEX
ROCKVILLE, MD
SOUTH WINDSOR, CT - BOSTON, MA - NEW BEDFORD, MA - HOLYOKE, MA

184 HIGH STREET, SUITE 502
BOSTON, MA 02210

55H CONNECTICUT AVENUE
SOUTH WINDSOR, CT

This drawings prepared by Apex for this project are instruments of Apex's service for use solely with respect to this project, and Apex shall be deemed the author of the Drawing and shall retain all common law, statutory and other reserved rights with respect thereto, including the copyright. The Documents shall not be used or other projects, for additions to this project or for completion of this project by others, except by agreement in writing and with appropriate compensation to Apex.

PROJECT
NEW BEDFORD MARINE COMMERCE TERMINAL

OWNER
MASSACHUSETTS CLEAN ENERGY CENTER
55 SUMMER STREET, 9TH FLOOR
BOSTON, MASSACHUSETTS

NO.	DATE	DESCRIPTION	BY
2	03/05/12	EX. COND. UPDATE	CWM
1	12/23/11	FOR CONSTRUCTION	CHM

PROJECT NO.	6690
CADD FILE	E-1.1-E-2.2_EXISTING_CONDITIONS
DESIGNED BY	GCD
DRAWN BY	GCD
CHECKED BY	CMM
DATE	08/04/2011
DRAWING SCALE	1"=40'

GRAPHIC SCALE
SCALE: 1"=40'
0 20 40 80

SHEET TITLE
EXISTING CONDITIONS UPLAND SHEET 1

DRAWING NO.
E-1.1
DRAFT

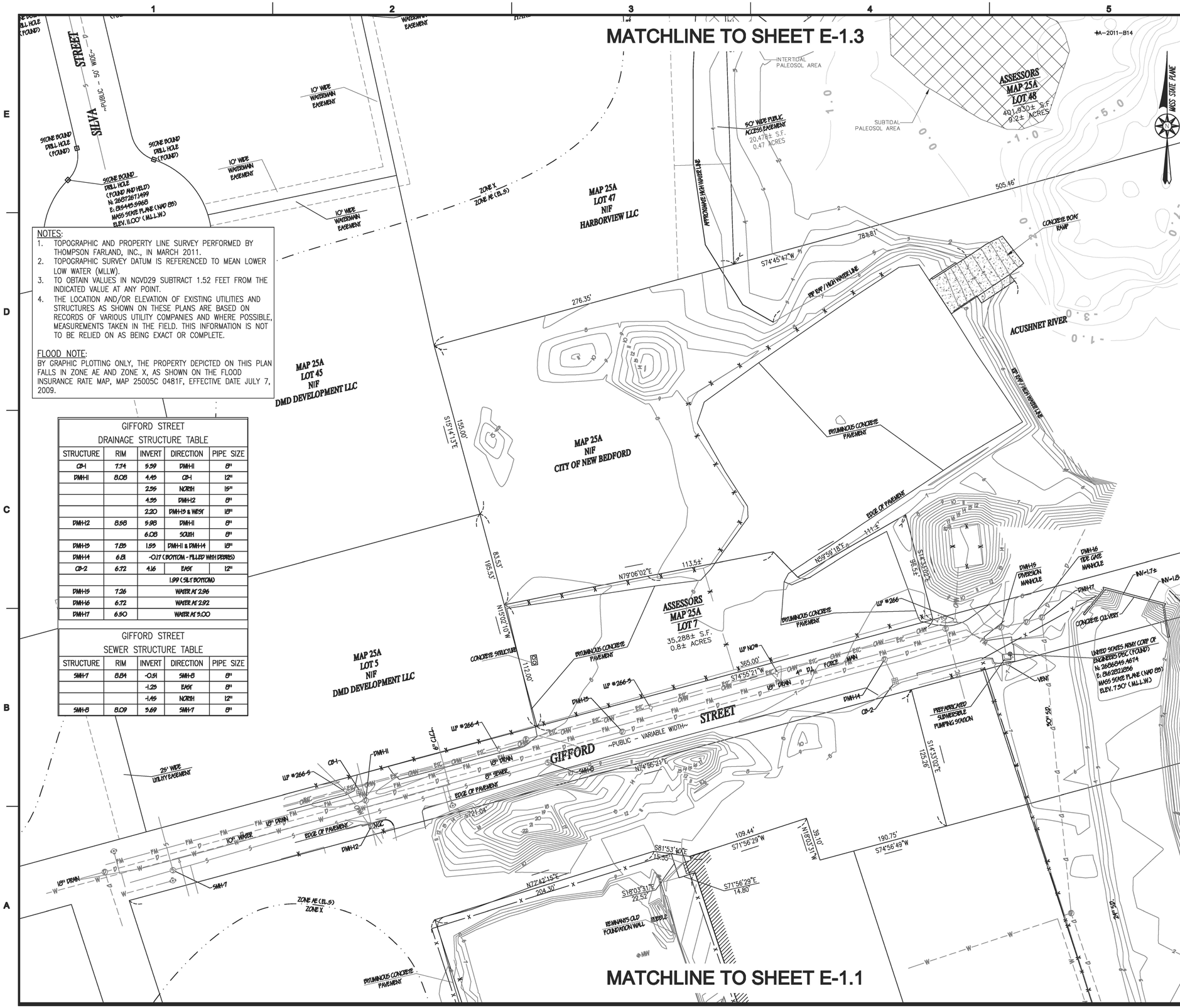

NOTES:

1. TOPOGRAPHIC AND PROPERTY LINE SURVEY PERFORMED BY THOMPSON FARLAND, INC., IN MARCH 2011.
2. TOPOGRAPHIC SURVEY DATUM IS REFERENCED TO MEAN LOWER LOW WATER (MLLW).
3. TO OBTAIN VALUES IN NGVD29 SUBTRACT 1.52 FEET FROM THE INDICATED VALUE AT ANY POINT.
4. THE LOCATION AND/OR ELEVATION OF EXISTING UTILITIES AND STRUCTURES AS SHOWN ON THESE PLANS ARE BASED ON RECORDS OF VARIOUS UTILITY COMPANIES AND WHERE POSSIBLE, MEASUREMENTS TAKEN IN THE FIELD. THIS INFORMATION IS NOT TO BE RELIED ON AS BEING EXACT OR COMPLETE.

FLOOD NOTE:

BY GRAPHIC PLOTTING ONLY, THE PROPERTY DEPICTED ON THIS PLAN FALLS IN ZONE AE AND ZONE X, AS SHOWN ON THE FLOOD INSURANCE RATE MAP, MAP 25005C 0481F, EFFECTIVE DATE JULY 7, 2009.

GIFFORD STREET
DRAINAGE STRUCTURE TABLE

STRUCTURE	RIM	INVERT	DIRECTION	PIPE SIZE
CB-1	7.74	5.59	DWH-11	8"
DWH-11	8.08	4.19	CB-1	12"
		2.55	NORTH	15"
		4.55	DWH-12	8"
		2.20	DWH-13 & WEST	15"
DWH-12	8.58	5.98	DWH-11	8"
		6.08	SOUTH	8"
DWH-13	7.83	1.59	DWH-11 & DWH-14	15"
DWH-14	6.81	-0.17 (BOTTOM - FILLED WITH DEBRIS)		
CB-2	6.72	4.16	EAST	12"
		1.99 (SILT BOTTOM)		
DWH-15	7.26	WATER AT 2.96		
DWH-16	6.72	WATER AT 2.92		
DWH-17	6.50	WATER AT 5.00		

GIFFORD STREET
SEWER STRUCTURE TABLE

STRUCTURE	RIM	INVERT	DIRECTION	PIPE SIZE
SMH-7	8.84	-0.51	SMH-8	8"
		-1.29	EAST	8"
		-1.45	NORTH	12"
SMH-8	8.09	3.69	SMH-7	8"

APEX

ROCKVILLE, MD
SOUTH WINDSOR, CT - BOSTON, MA - NEW BEDFORD, MA - HOLYOKE, MA

184 HIGH STREET, SUITE 502
BOSTON, MA 02210

55H CONNECTICUT AVENUE
SOUTH WINDSOR, CT

This drawings prepared by Apex for this project are instruments of Apex's service for use solely with respect to this project, and Apex shall be deemed the author of the Drawing and shall retain all common law, statutory and other reserved rights with respect thereto, including the copyright. The Documents shall not be used or other projects, for additions to this project or for completion of this project by others, except by agreement in writing and with appropriate compensation to Apex.

PROJECT
NEW BEDFORD MARINE COMMERCE TERMINAL

OWNER
MASSACHUSETTS CLEAN ENERGY CENTER
55 SUMMER STREET, 9TH FLOOR
BOSTON, MASSACHUSETTS

NO.	DATE	DESCRIPTION	BY
2	03/05/12	EX. COND. UPDATE	CWM
1	12/23/11	FOR CONSTRUCTION	CHM

PROJECT NO.	6690
CADD FILE	E-1.1-E-2.2_EXISTING_CONDITIONS
DESIGNED BY	GCD
DRAWN BY	GCD
CHECKED BY	CMM
DATE	08/04/2011
DRAWING SCALE	1"=40'

GRAPHIC SCALE
SCALE: 1"=40'
0 20 40 80

SHEET TITLE
EXISTING CONDITIONS UPLAND SHEET 2

DRAWING NO.
E-1.2
DRAFT

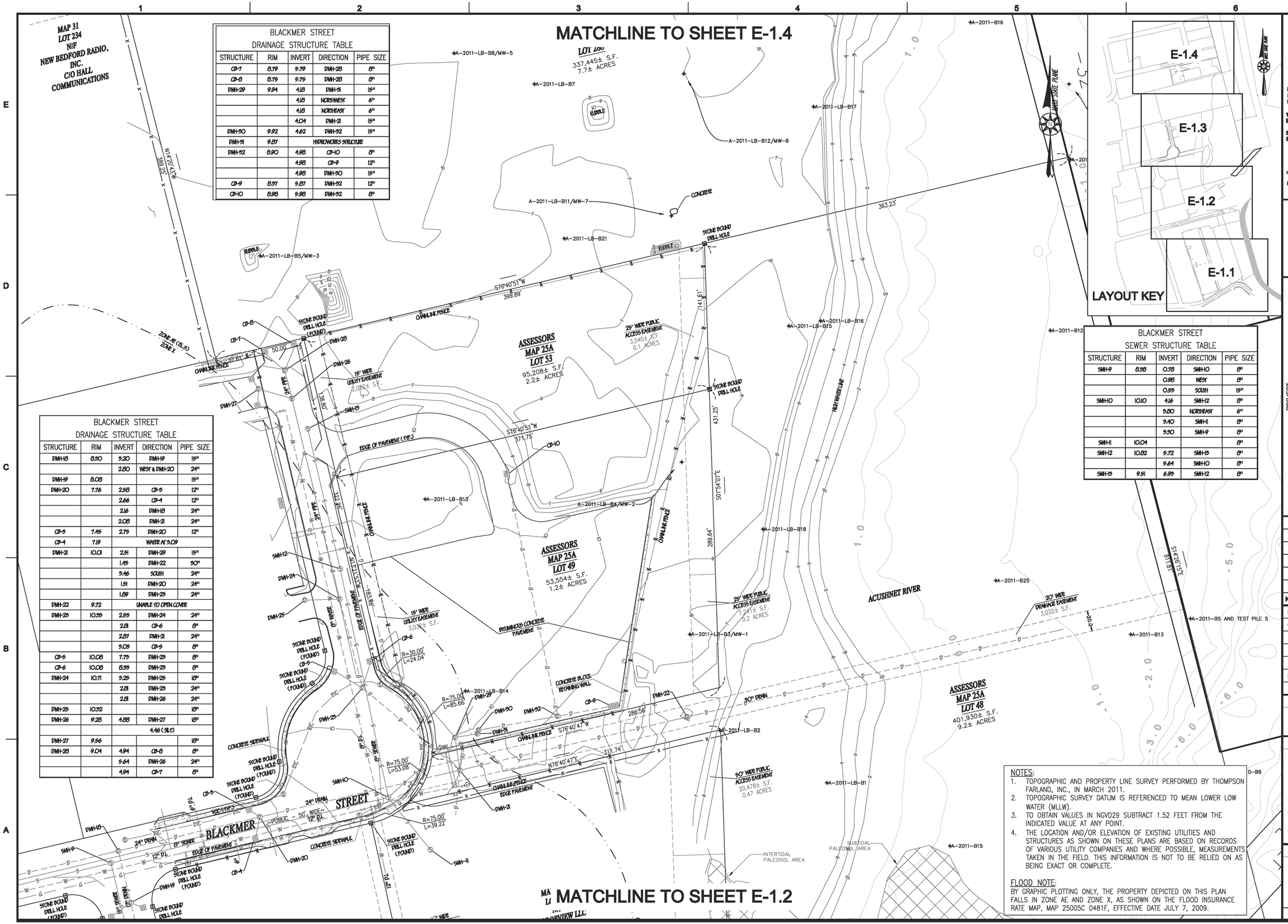

BLACKMER STREET DRAINAGE STRUCTURE TABLE				
STRUCTURE	RIM	INVERT	DIRECTION	PIPE SIZE
CB-7	8.79	5.79	DMH-28	8"
CB-8	8.75	5.75	DMH-28	8"
DMH-29	9.94	4.18	DMH-31	15"
		4.18	NORTHWEST	6"
		4.18	NORTHEAST	6"
		4.04	DMH-21	15"
DMH-30	9.92	4.62	DMH-32	15"
DMH-31	9.87	HYDROWORKS STRUCTURE		
DMH-32	8.90	4.98	CB-10	8"
		4.98	CB-9	12"
		4.98	DMH-30	15"
CB-9	8.37	5.87	DMH-32	12"
CB-10	8.98	5.98	DMH-32	8"

BLACKMER STREET DRAINAGE STRUCTURE TABLE				
STRUCTURE	RIM	INVERT	DIRECTION	PIPE SIZE
DMH-18	8.50	5.20	DMH-19	15"
		2.80	WEST & DMH-20	24"
DMH-19	8.08			15"
DMH-20	7.76	2.58	CB-3	12"
		2.66	CB-4	12"
		2.16	DMH-18	24"
		2.08	DMH-21	24"
CB-3	7.45	2.75	DMH-20	12"
CB-4	7.19	WATER AT 5.09		
DMH-21	10.01	2.51	DMH-29	15"
		1.45	DMH-22	30"
		3.46	SOUTH	24"
		1.51	DMH-20	24"
		1.89	DMH-23	24"
DMH-22	9.72	UNABLE TO OPEN COVER		
DMH-23	10.39	2.93	DMH-24	24"
		2.81	CB-6	8"
		2.87	DMH-21	24"
		3.03	CB-5	8"
CB-5	10.08	7.73	DMH-23	8"
CB-6	10.08	8.33	DMH-23	8"
DMH-24	10.71	3.23	DMH-25	15"
		2.81	DMH-23	24"
		2.81	DMH-26	24"
DMH-25	10.32			15"
DMH-26	9.23	4.88	DMH-27	15"
			4.46 (SLT)	
DMH-27	9.56			15"
DMH-28	9.04	4.94	CB-8	8"
		5.64	DMH-26	24"
		4.94	CB-7	8"

BLACKMER STREET SEWER STRUCTURE TABLE				
STRUCTURE	RIM	INVERT	DIRECTION	PIPE SIZE
SMH-9	8.38	0.78	SMH-10	8"
		0.98	WEST	8"
		0.59	SOUTH	15"
SMH-10	10.10	4.16	SMH-12	8"
		3.80	NORTHEAST	6"
		3.40	SMH-11	8"
		3.50	SMH-9	8"
SMH-11	10.04			8"
SMH-12	10.82	5.72	SMH-13	8"
		5.64	SMH-10	8"
SMH-13	9.51	6.95	SMH-12	8"

NOTES:
1. TOPOGRAPHIC AND PROPERTY LINE SURVEY PERFORMED BY THOMPSON FARLAND, INC., IN MARCH 2011.
2. TOPOGRAPHIC SURVEY DATUM IS REFERENCED TO MEAN LOWER LOW WATER (MLLW).
3. TO OBTAIN VALUES IN NGVD29 SUBTRACT 1.52 FEET FROM THE INDICATED VALUE AT ANY POINT.
4. THE LOCATION AND/OR ELEVATION OF EXISTING UTILITIES AND STRUCTURES AS SHOWN ON THESE PLANS ARE BASED ON RECORDS OF VARIOUS UTILITY COMPANIES AND WHERE POSSIBLE, MEASUREMENTS TAKEN IN THE FIELD. THIS INFORMATION IS NOT TO BE RELIED ON AS BEING EXACT OR COMPLETE.

FLOOD NOTE:
BY GRAPHIC PLOTTING ONLY, THE PROPERTY DEPICTED ON THIS PLAN FALLS IN ZONE AE AND ZONE X, AS SHOWN ON THE FLOOD INSURANCE RATE MAP, MAP 25005C 0481F, EFFECTIVE DATE JULY 7, 2009.

LAYOUT KEY
E-1.4
E-1.3
E-1.2
E-1.1

APEX
ROCKVILLE, MD
SOUTH WINDSOR, CT - BOSTON, MA - NEW BEDFORD, MA - HOLYOKE, MA
184 HIGH STREET, SUITE 502
BOSTON, MA 02210
55H CONNECTICUT AVENUE
SOUTH WINDSOR, CT

This drawings prepared by Apex for this project are instruments of Apex's service for use solely with respect to this project, and Apex shall be deemed the author of the Drawing and shall retain all common law, statutory and other reserved rights with respect thereto, including the copyright. The Documents shall not be used on other projects, for additions to this project or for completion of this project by others, except by agreement in writing and with appropriate compensation to Apex.

PROJECT
NEW BEDFORD MARINE COMMERCE TERMINAL

OWNER
MASSACHUSETTS CLEAN ENERGY CENTER
55 SUMMER STREET, 9TH FLOOR
BOSTON, MASSACHUSETTS

NO.	DATE	DESCRIPTION	BY
1	12/23/11	FOR CONSTRUCTION	CHM

PROJECT NO.	6690
CADD FILE	E-1.1-E-1.2_EXISTING_CONDITIONS
DESIGNED BY	GCD
DRAWN BY	GCD
CHECKED BY	CMM
DATE	08/04/2011
DRAWING SCALE	1"=40'

GRAPHIC SCALE
SCALE: 1"=40'
0 20 40 80

SHEET TITLE
EXISTING CONDITIONS UPLAND SHEET 3

DRAWING NO.
E-1.3
DRAFT

WRIGHT STREET DRAINAGE STRUCTURE TABLE				
STRUCTURE	RIM	INVERT	DIRECTION	PIPE SIZE
DMH-35	11.95	7.19	CB-11	15"
		7.66	CB-12	15"
		-2.45	DMH-34 & WEST	66"
CB-11	11.21	7.91	DMH-35	15"
CB-12	11.26	7.26 TO TOP OF DEBRIS		
DMH-34	12.97	4.72	DMH-39	15"
		-2.17	DMH-35 & 35	66"
DMH-35	12.46	-2.54	DMH-34 & 36	66"
DMH-36	12.10	-5.95	DMH-35 & NORTH	66"
DMH-37	8.75	-4.45 (BOTTOM)		
DMH-38	13.04	-5.16	DMH-37 & 40	72"
DMH-39	9.91	5.56	DMH-34	15"
		5.61	CB-15	12"
		5.61	CB-14	12"
CB-15	9.29	6.59	DMH-39	12"
CB-14	9.50	5.95	DMH-39	12"
DMH-40	7.24	-5.36 (BOTTOM)		

WRIGHT STREET SEWER STRUCTURE TABLE				
STRUCTURE	RIM	INVERT	DIRECTION	PIPE SIZE
SMH-14	11.80	4.79	NORTH	8"
		4.79	SMH-15	10"
		4.69	WEST	12"
SMH-15	12.84	5.45	NORTH & SOUTH	10"
		5.35	SMH-14	10"
SMH-16	12.92	5.68	E. S. & W.	6""
		5.58	NORTH	10"
SMH-17	10.88			

NOTES:

1. TOPOGRAPHIC AND PROPERTY LINE SURVEY PERFORMED BY THOMPSON FARLAND, INC., IN MARCH 2011.
2. TOPOGRAPHIC SURVEY DATUM IS REFERENCED TO MEAN LOWER LOW WATER (MLLW).
3. TO OBTAIN VALUES IN NGVD29 SUBTRACT 1.52 FEET FROM THE INDICATED VALUE AT ANY POINT.
4. THE LOCATION AND/OR ELEVATION OF EXISTING UTILITIES AND STRUCTURES AS SHOWN ON THESE PLANS ARE BASED ON RECORDS OF VARIOUS UTILITY COMPANIES AND WHERE POSSIBLE, MEASUREMENTS TAKEN IN THE FIELD. THIS INFORMATION IS NOT TO BE RELIED ON AS BEING EXACT OR COMPLETE.

FLOOD NOTE:

BY GRAPHIC PLOTTING ONLY, THE PROPERTY DEPICTED ON THIS PLAN FALLS IN ZONE AE AND ZONE X, AS SHOWN ON THE FLOOD INSURANCE RATE MAP, MAP 25005C 0481F, EFFECTIVE DATE JULY 7, 2009.

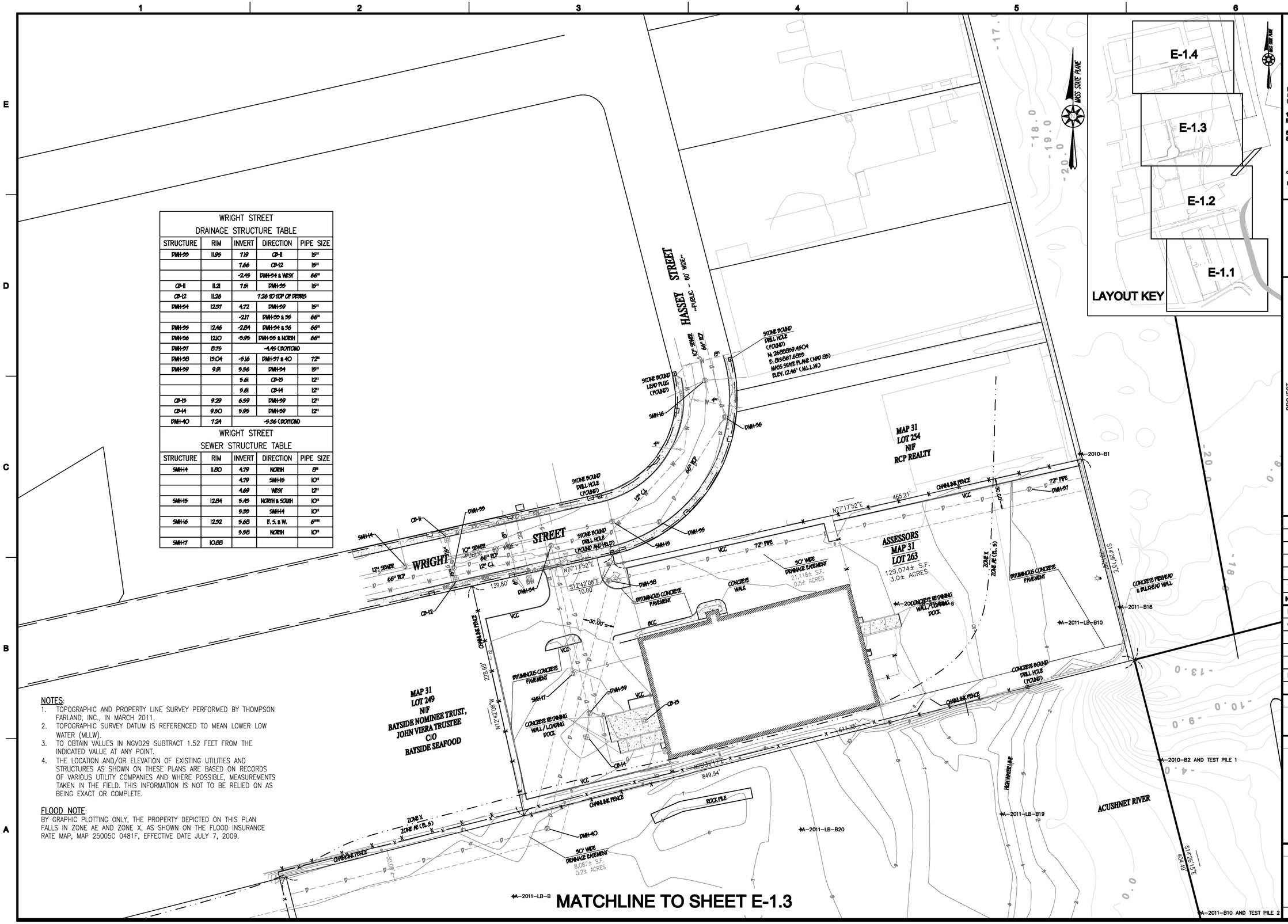

APEX

ROCKVILLE, MD
SOUTH WINDSOR, CT - BOSTON, MA - NEW BEDFORD, MA - HOLYOKE, MA

184 HIGH STREET, SUITE 502
BOSTON, MA 02210

55H CONNECTICUT AVENUE
SOUTH WINDSOR, CT

This drawings prepared by Apex for this project are instruments of Apex's service for use solely with respect to this project, and Apex shall be deemed the author of the Drawing and shall retain all common law, statutory and other reserved rights with respect thereto, including the copyright. The Documents shall not be used on other projects, for additions to this project or for completion of this project by others, except by agreement in writing and with appropriate compensation to Apex.

PROJECT
NEW BEDFORD MARINE COMMERCE TERMINAL

OWNER
MASSACHUSETTS CLEAN ENERGY CENTER
55 SUMMER STREET, 9TH FLOOR
BOSTON, MASSACHUSETTS

NO.	DATE	DESCRIPTION	BY
1	12/23/11	FOR CONSTRUCTION	CHM

PROJECT NO.	6690
CADD FILE	E-1.1-E-2.2_(EXISTING_CONDITIONS)
DESIGNED BY	GCD
DRAWN BY	GCD
CHECKED BY	CMM
DATE	08/04/2011
DRAWING SCALE	1"=40'

GRAPHIC SCALE
SCALE: 1"=40'
0 20 40 80

SHEET TITLE

EXISTING CONDITIONS UPLAND SHEET 4

DRAWING NO.

E-1.4

DRAFT

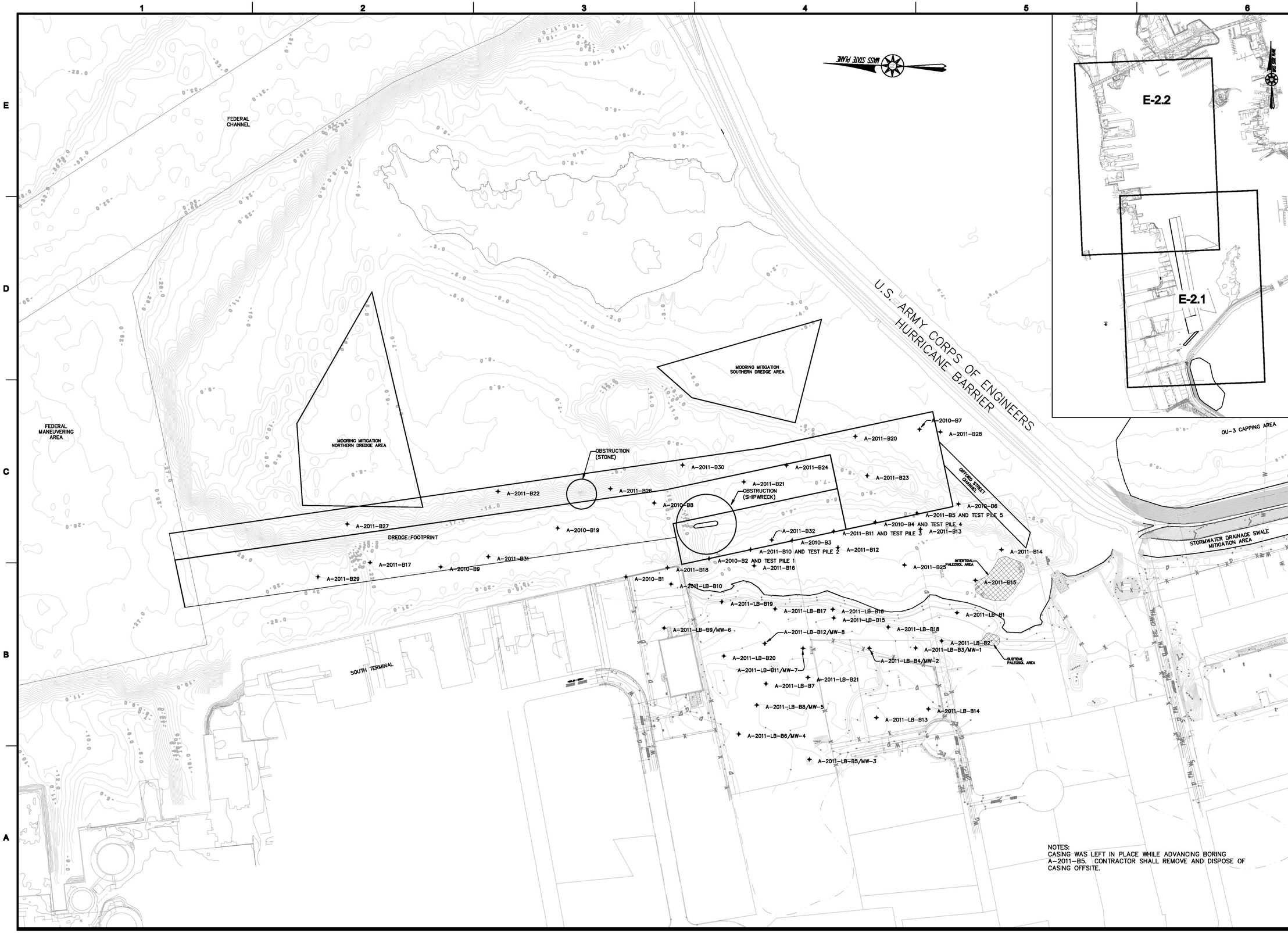

NOTES:
CASING WAS LEFT IN PLACE WHILE ADVANCING BORING A-2011-B5. CONTRACTOR SHALL REMOVE AND DISPOSE OF CASING OFFSITE.

APEX

ROCKVILLE, MD
SOUTH WINDSOR, CT - BOSTON, MA - NEW BEDFORD, MA - HOLYOKE, MA

184 HIGH STREET, SUITE 502
BOSTON, MA 02210

55H CONNECTICUT AVENUE
SOUTH WINDSOR, CT

This drawings prepared by Apex for this project are instruments of Apex's service for use solely with respect to this project, and Apex shall be deemed the author of the Drawing and shall retain all common law, statutory and other reserved rights with respect thereto, including the copyright. The Documents shall not be used on other projects, for additions to this project or for completion of this project by others, except by agreement in writing and with appropriate compensation to Apex.

PROJECT
NEW BEDFORD MARINE COMMERCE TERMINAL

OWNER
MASSACHUSETTS CLEAN ENERGY CENTER
55 SUMMER STREET, 9TH FLOOR
BOSTON, MASSACHUSETTS

NO.	DATE	DESCRIPTION	BY
2	03/05/12	EX. COND. UPDATE	CWM
1	12/23/11	FOR CONSTRUCTION	CHM

PROJECT NO.	6690
CADD FILE	E-1.1-E-2.2_EXISTING_CONDITIONS
DESIGNED BY	GCD
DRAWN BY	GCD
CHECKED BY	CMM
DATE	08/04/2011
DRAWING SCALE	1"=150'

GRAPHIC SCALE
SCALE: 1"=150'
0 75 150 300

SHEET TITLE
EXISTING CONDITIONS DREDGE FOOTPRINT SHEET 1

DRAWING NO.
E-2.1
DRAFT

APEX

ROCKVILLE, MD
SOUTH WINDSOR, CT - BOSTON, MA - NEW BEDFORD, MA - HOLYOKE, MA

184 HIGH STREET, SUITE 502
BOSTON, MA 02210

55H CONNECTICUT AVENUE
SOUTH WINDSOR, CT

This drawings prepared by Apex for this project are instruments of Apex's service for use solely with respect to this project, and Apex shall be deemed the author of the Drawing and shall retain all common law, statutory and other reserved rights with respect thereto, including the copyright. The Documents shall not be used on other projects, for additions to this project or for completion of this project by others, except by agreement in writing and with appropriate compensation to Apex.

PROJECT

NEW BEDFORD
MARINE COMMERCE
TERMINAL

OWNER

MASSACHUSETTS CLEAN ENERGY CENTER
55 SUMMER STREET, 9TH FLOOR
BOSTON, MASSACHUSETTS

NO.	DATE	DESCRIPTION	BY
1	12/23/11	FOR CONSTRUCTION	CHM

PROJECT NO.	6690
CADD FILE	E-1.1-E-2.2_EXISTING_CONDITIONS
DESIGNED BY	GCD
DRAWN BY	GCD
CHECKED BY	CMM
DATE	08/04/2011
DRAWING SCALE	1"=150'

GRAPHIC SCALE

SCALE: 1"=150'

0 75 150 300

SHEET TITLE

EXISTING
CONDITIONS
DREDGE
FOOTPRINT
SHEET 2

DRAWING NO.

E-2.2
DRAFT

P:\Jobs\6690 NEH_ Phase IV\PLANS\FINAL_PLANS\100% Submittal\E-1.1-E-2.2_EXISTING_CONDITIONS.dwg

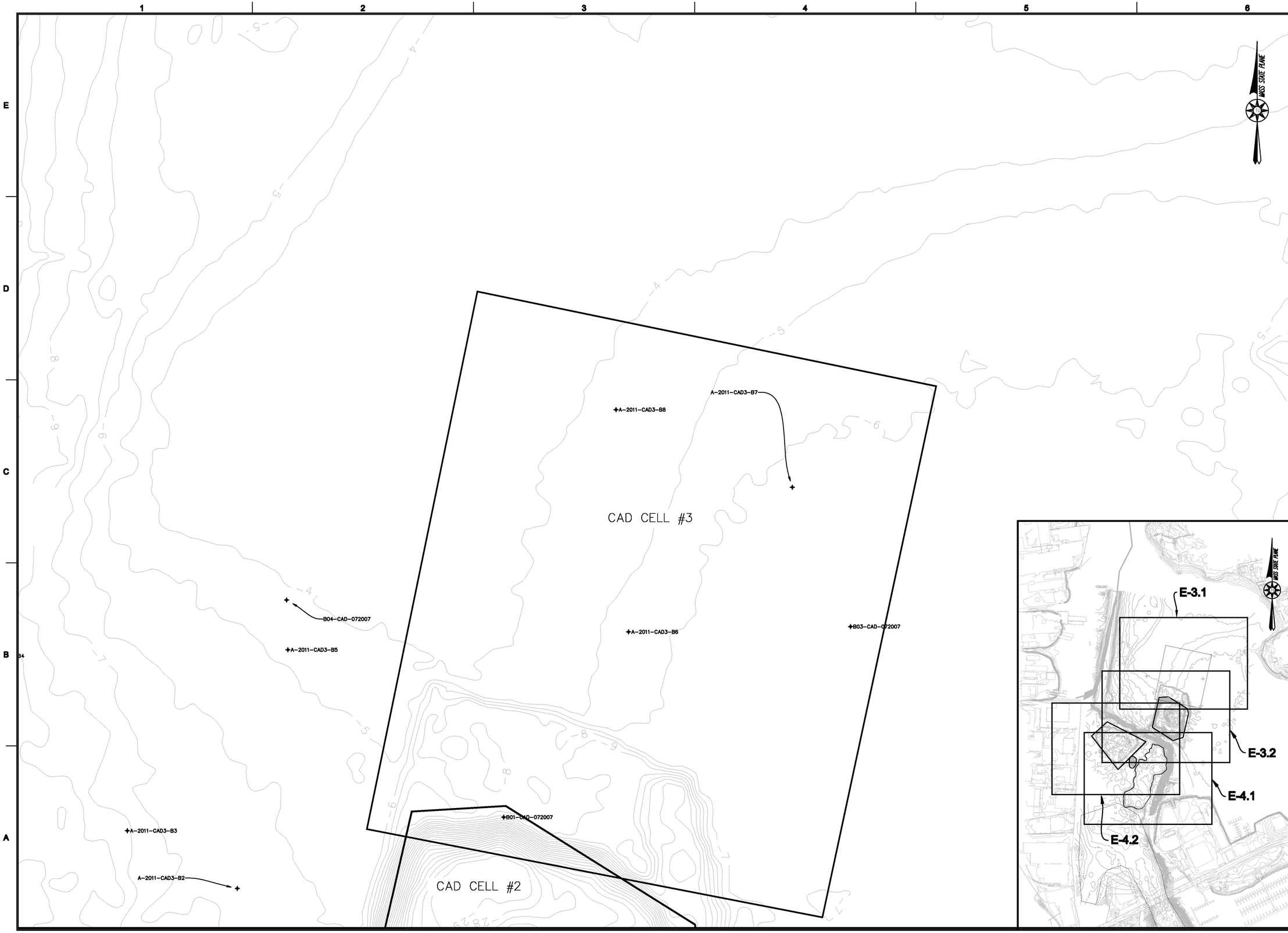

APEX

ROCKVILLE, MD
SOUTH WINDSOR, CT - BOSTON, MA -
NEW BEDFORD, MA - HOLYOKE, MA

184 HIGH STREET, SUITE 502
BOSTON, MA 02210

55H CONNECTICUT AVENUE
SOUTH WINDSOR, CT

This drawings prepared by Apex for this project are instruments of Apex's service for use solely with respect to this project, and Apex shall be deemed the author of the Drawing and shall retain all common law, statutory and other reserved rights with respect thereto, including the copyright. The Documents shall not be used on other projects, for additions to this project or for completion of this project by others, except by agreement in writing and with appropriate compensation to Apex.

PROJECT

NEW BEDFORD
MARINE COMMERCE
TERMINAL

OWNER

MASSACHUSETTS CLEAN ENERGY CENTER
55 SUMMER STREET, 9TH FLOOR
BOSTON, MASSACHUSETTS

NO.	DATE	DESCRIPTION	BY
1	12/23/11	FOR CONSTRUCTION	CHM

PROJECT NO.	6690
CADD FILE	E-3.1-E-4.3_EXISTING_CONDITIONS
DESIGNED BY	GCD
DRAWN BY	GCD
CHECKED BY	CMM
DATE	08/04/2011
DRAWING SCALE	1"=50'

GRAPHIC SCALE

SCALE: 1"=50'

0 25 50 75 125 FEET

SHEET TITLE

EXISTING
CONDITIONS
CAD CELL #3

DRAWING NO.

E-3.1
DRAFT

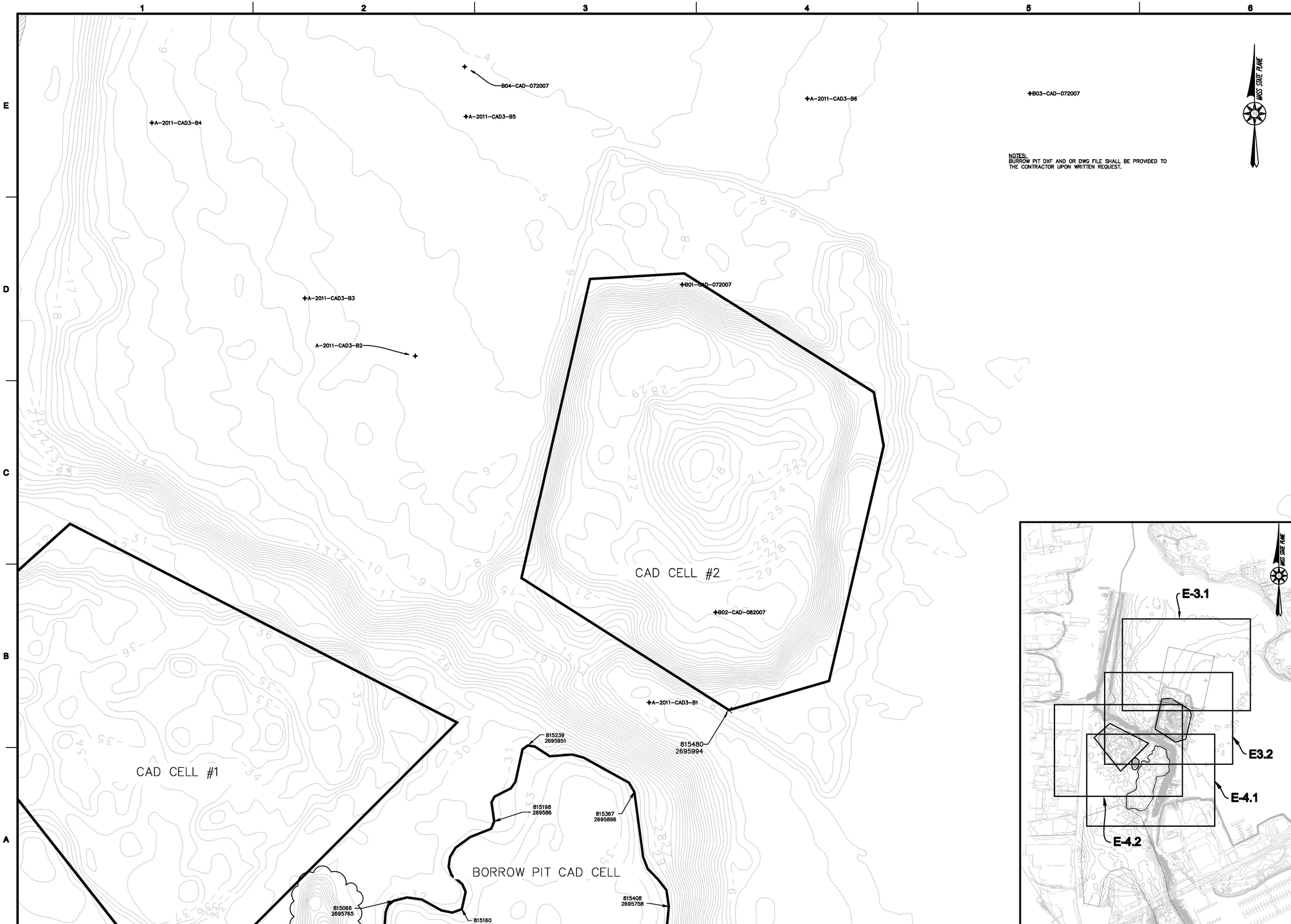

NOTES:
BURROW PIT DXF AND OR DWG FILE SHALL BE PROVIDED TO THE CONTRACTOR UPON WRITTEN REQUEST.

APEX

ROCKVILLE, MD
SOUTH WINDSOR, CT - BOSTON, MA -
NEW BEDFORD, MA - HOLYOKE, MA

184 HIGH STREET, SUITE 502
BOSTON, MA 02210

55H CONNECTICUT AVENUE
SOUTH WINDSOR, CT

This drawings prepared by Apex for this project are instruments of Apex's service for use solely with respect to this project, and Apex shall be deemed the author of the Drawing and shall retain all common law, statutory and other reserved rights with respect thereto, including the copyright. The Documents shall not be used on other projects, for additions to this project or for completion of this project by others, except by agreement in writing and with appropriate compensation to Apex.

PROJECT
NEW BEDFORD
MARINE COMMERCE
TERMINAL

OWNER
MASSACHUSETTS CLEAN ENERGY CENTER
55 SUMMER STREET, 9TH FLOOR
BOSTON, MASSACHUSETTS

NO.	DATE	DESCRIPTION	BY
1	12/23/11	FOR CONSTRUCTION	CHM

PROJECT NO.	6690
CADD FILE	E-3.1-E-3.3_(EXISTING_CONDITION)
DESIGNED BY	GCD
DRAWN BY	GCD
CHECKED BY	CMM
DATE	08/04/2011
DRAWING SCALE	1"=50'

GRAPHIC SCALE
SCALE: 1"=50'
0 25 50 75 125 FEET

SHEET TITLE

EXISTING CONDITIONS CAD CELL #2 DISPOSAL AREA

DRAWING NO.

E-3.2
DRAFT

CAD CELL #1
NO DREDGE/NO SPUD

CAD CELL #2

✦A-2011-CAD3-B1

815480
2695994

815239
2695951

815198
2695886

815367
2695896

815408
2695758

815066
2695765

815160
2695755

815066
2695716

SUBMERGED OBSTRUCTION

BORROW PIT CAD CELL
NO DREDGE/NO SPUD

815403
2695650

815357
2695600

815252
2695579

815027
2695558

MOORINGS, SEE GENERAL NOTES.

815207
2695410

815002
2695426

814968
2695401

814897
2695364

814890
2695290

814898
2695193

815980
2695197

815139
2695212

815035
2695175

-32.0

-33.0

FEDERAL CHANNEL

NIEMIEC MARINE

POPE'S ISLAND

NOTES:
BORROW PIT DXF AND OR DWG FILE SHALL BE PROVIDED TO THE CONTRACTOR UPON WRITTEN REQUEST.

MASS STATE PLANE

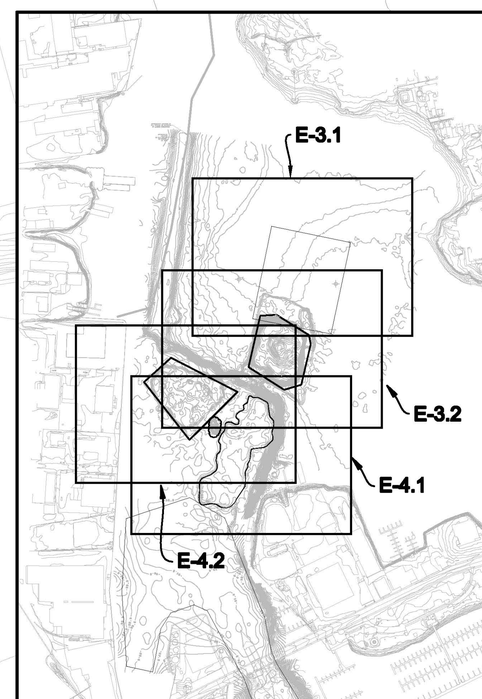

APEX

ROCKVILLE, MD
SOUTH WINDSOR, CT - BOSTON, MA - NEW BEDFORD, MA - HOLYOKE, MA

184 HIGH STREET, SUITE 502
BOSTON, MA 02210

55H CONNECTICUT AVENUE
SOUTH WINDSOR, CT

This drawings prepared by Apex for this project are instruments of Apex's service for use solely with respect to this project, and Apex shall be deemed the author of the Drawing and shall retain all common law, statutory and other reserved rights with respect thereto, including the copyright. The Documents shall not be used on other projects, for additions to this project or for completion of this project by others, except by agreement in writing and with appropriate compensation to Apex.

PROJECT
NEW BEDFORD
MARINE COMMERCE
TERMINAL

OWNER
MASSACHUSETTS CLEAN ENERGY CENTER
55 SUMMER STREET, 9TH FLOOR
BOSTON, MASSACHUSETTS

NO.	DATE	DESCRIPTION	BY
1	12/23/11	FOR CONSTRUCTION	CHM

PROJECT NO.	6690
CADD FILE	E-3.1-E-3.3_(EXISTING_CONDITIONS)
DESIGNED BY	GCD
DRAWN BY	GCD
CHECKED BY	CMM
DATE	08/04/2011
DRAWING SCALE	1"=50'

GRAPHIC SCALE
SCALE: 1"=50'
0 25 50 100

SHEET TITLE
EXISTING
CONDITIONS
BORROW PIT
CAD CELL

DRAWING NO.
E-4.1
DRAFT

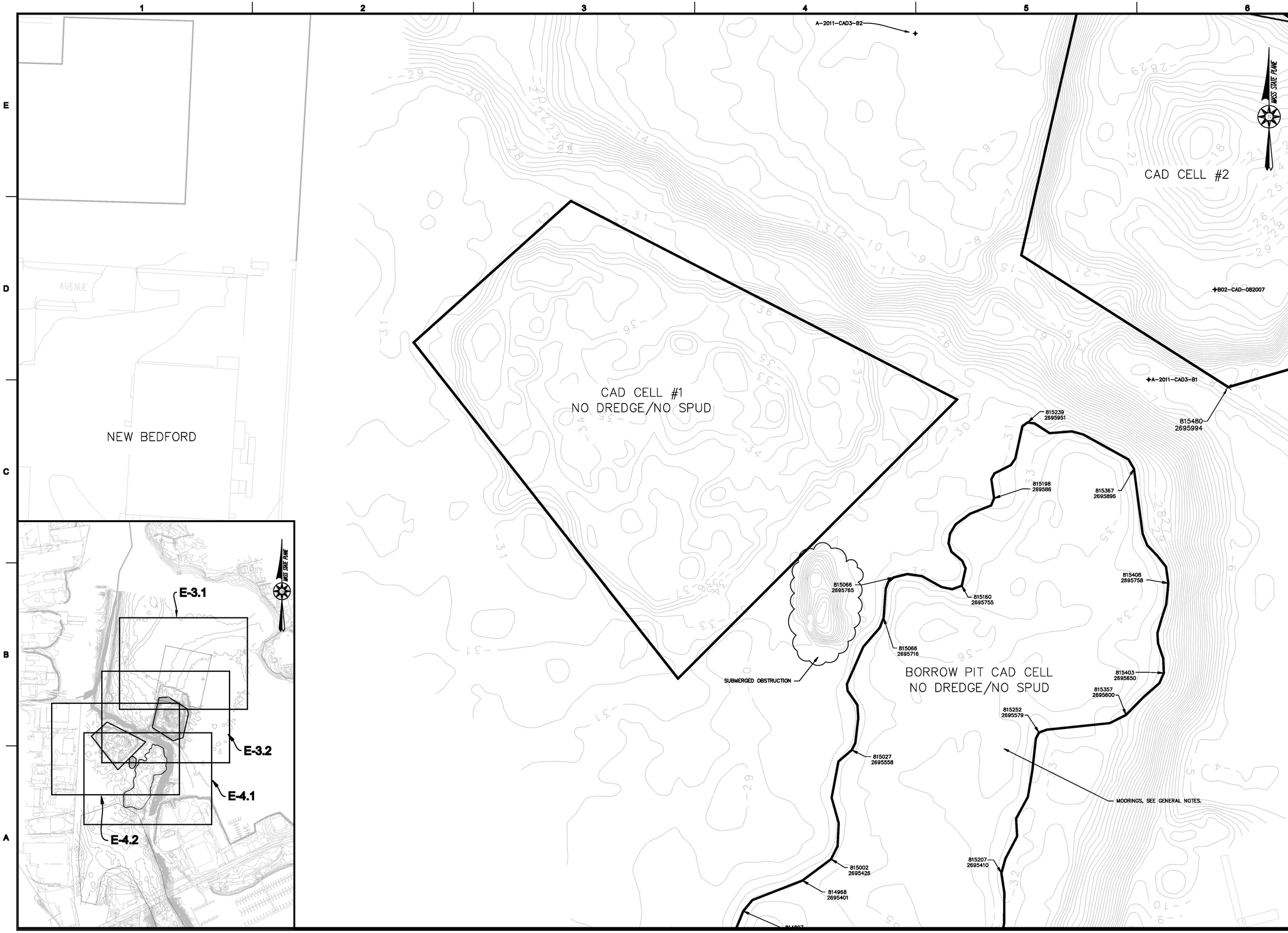

APEX

ROCKVILLE, MD
SOUTH WINDSOR, CT - BOSTON, MA -
NEW BEDFORD, MA - HOLYOKE, MA

184 HIGH STREET, SUITE 502
BOSTON, MA 02210

55H CONNECTICUT AVENUE
SOUTH WINDSOR, CT

This drawings prepared by Apex for this project are instruments of Apex's service for use solely with respect to this project, and Apex shall be deemed the author of the Drawing and shall retain all common law, statutory and other reserved rights with respect thereto, including the copyright. The Documents shall not be used on other projects, for additions to this project or for completion of this project by others, except by agreement in writing and with appropriate compensation to Apex.

PROJECT
NEW BEDFORD
MARINE COMMERCE
TERMINAL

OWNER
MASSACHUSETTS CLEAN ENERGY CENTER
55 SUMMER STREET, 9TH FLOOR
BOSTON, MASSACHUSETTS

NO.	DATE	DESCRIPTION	BY
1	12/23/11	FOR CONSTRUCTION	CHM

PROJECT NO.	6690
CADD FILE	E-3.1-E-3.3_(EXISTING_CONDITIONS)
DESIGNED BY	GCD
DRAWN BY	GCD
CHECKED BY	CMM
DATE	08/04/2011
DRAWING SCALE	1"=50'

GRAPHIC SCALE
SCALE: 1"=50'
0 25 50 100

SHEET TITLE
EXISTING
CONDITIONS
CAD CELL #1

DRAWING NO.
E-4.2
DRAFT

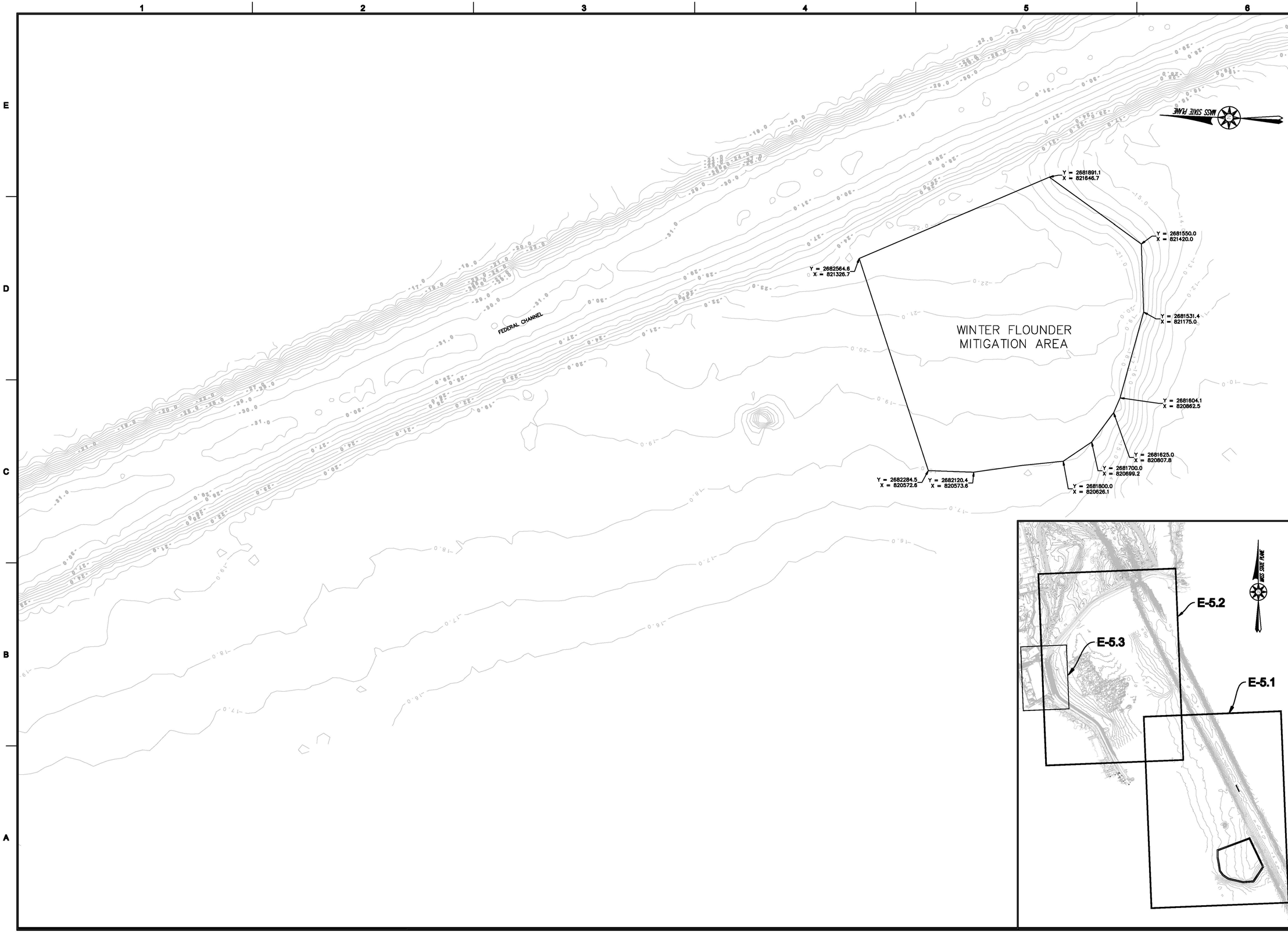

APEX

ROCKVILLE, MD
SOUTH WINDSOR, CT - BOSTON, MA -
NEW BEDFORD, MA - HOLYOKE, MA

184 HIGH STREET, SUITE 502
BOSTON, MA 02210

55H CONNECTICUT AVENUE
SOUTH WINDSOR, CT

This drawings prepared by Apex for this project are instruments of Apex's service for use solely with respect to this project, and Apex shall be deemed the author of the Drawing and shall retain all common law, statutory and other reserved rights with respect thereto, including the copyright. The Documents shall not be used on other projects, for additions to this project or for completion of this project by others, except by agreement in writing and with appropriate compensation to Apex.

PROJECT
NEW BEDFORD
MARINE COMMERCE
TERMINAL

OWNER
MASSACHUSETTS CLEAN ENERGY CENTER
55 SUMMER STREET, 9TH FLOOR
BOSTON, MASSACHUSETTS

NO.	DATE	DESCRIPTION	BY
1	12/23/11	FOR CONSTRUCTION	CHM

PROJECT NO.	6690
CADD FILE	E-5.1-E-5.3_(DOSITING_CONDITIONS)
DESIGNED BY	GCD
DRAWN BY	GCD
CHECKED BY	CMM
DATE	08/04/2011
DRAWING SCALE	1"=150'

GRAPHIC SCALE
SCALE: 1"=150'
0 75 150 300

SHEET TITLE

EXISTING
CONDITIONS
WINTER FLOUNDER
MITIGATION
AREA

DRAWING NO.

E-5.1
DRAFT

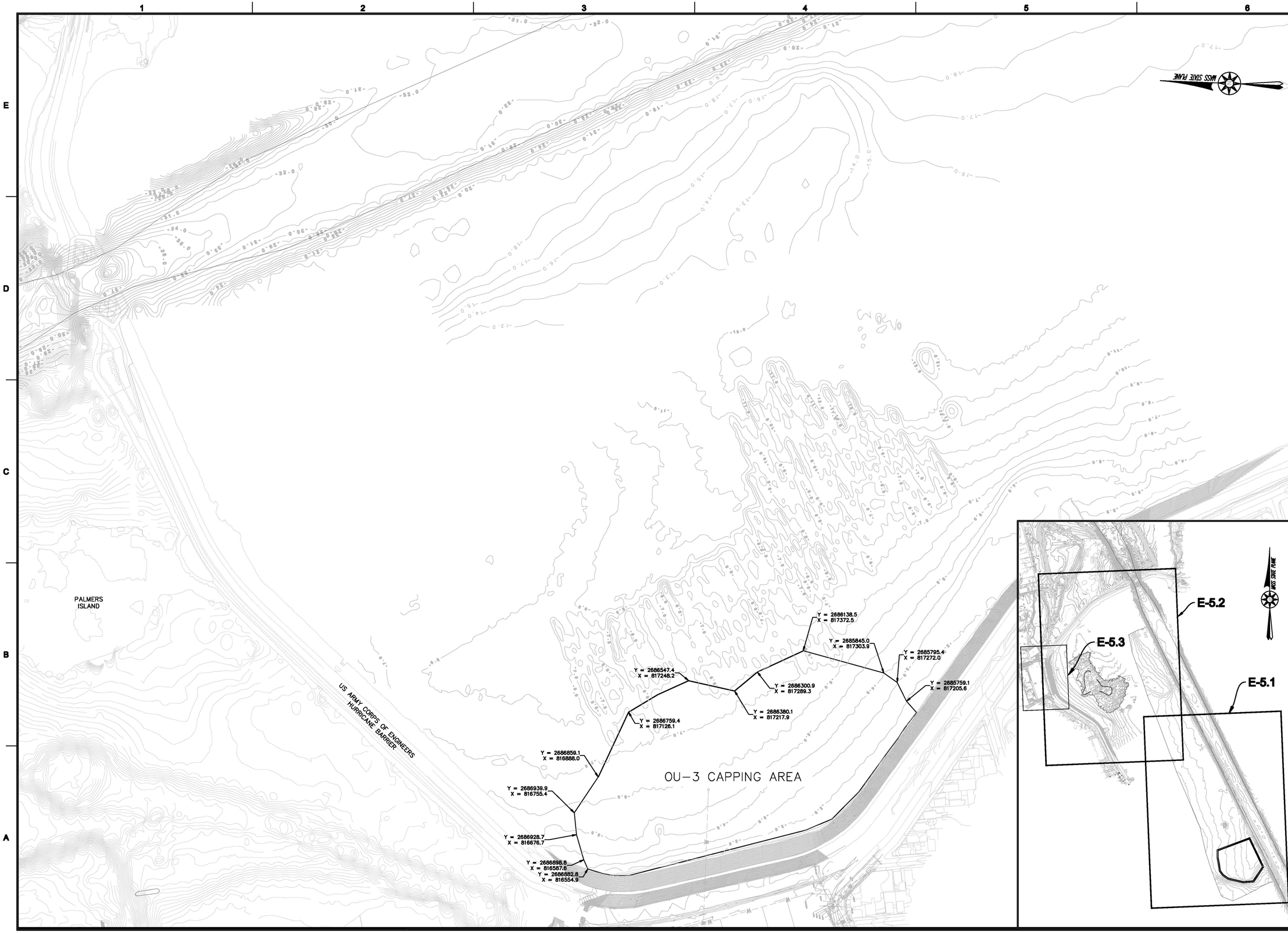

APEX

ROCKVILLE, MD
SOUTH WINDSOR, CT - BOSTON, MA - NEW BEDFORD, MA - HOLYOKE, MA

184 HIGH STREET, SUITE 502
BOSTON, MA 02210

55H CONNECTICUT AVENUE
SOUTH WINDSOR, CT

This drawings prepared by Apex for this project are instruments of Apex's service for use solely with respect to this project, and Apex shall be deemed the author of the Drawing and shall retain all common law, statutory and other reserved rights with respect thereto, including the copyright. The Documents shall not be used on other projects, for additions to this project or for completion of this project by others, except by agreement in writing and with appropriate compensation to Apex.

PROJECT

NEW BEDFORD
MARINE COMMERCE
TERMINAL

OWNER

MASSACHUSETTS CLEAN ENERGY COUNCIL
55 SUMMER STREET, 9TH FLOOR
BOSTON, MASSACHUSETTS

NO.	DATE	DESCRIPTION	BY
2	03/16/12	EX. COND. UPDATE	CWM
1	12/23/11	FOR CONSTRUCTION	CHM

PROJECT NO.	6690
CADD FILE	E-5.1-E-5.3_EXISTING_CONDITIONS
DESIGNED BY	GCD
DRAWN BY	GCD
CHECKED BY	CWM
DATE	08/04/2011
DRAWING SCALE	1"=150'

GRAPHIC SCALE

SCALE: 1"=150'

0 75 150 300

SHEET TITLE

EXISTING
CONDITIONS
OU-3
CAPPING AREA

DRAWING NO.

E-5.2

DRAFT

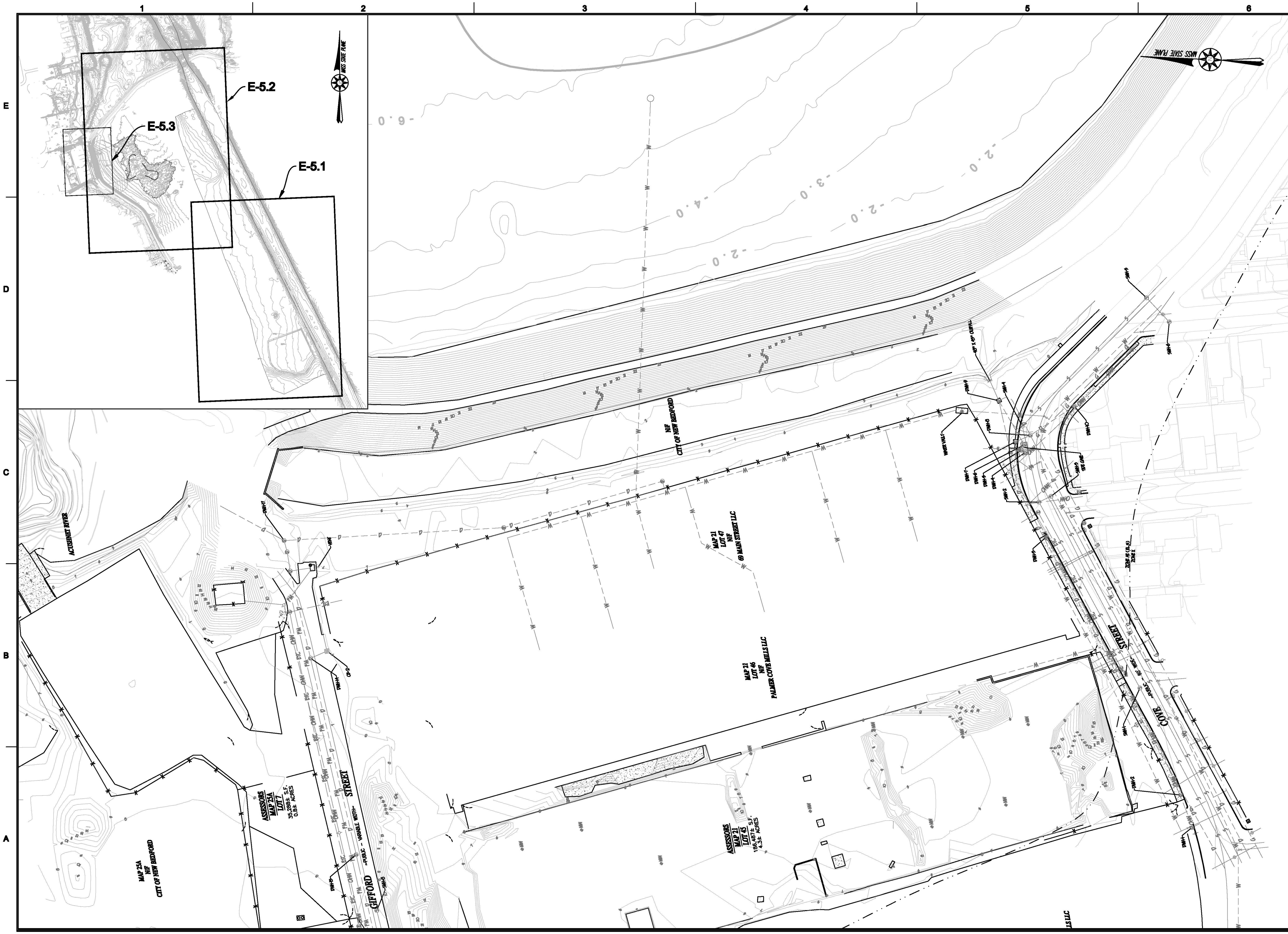

APEX

ROCKVILLE, MD
SOUTH WINDSOR, CT - BOSTON, MA -
NEW BEDFORD, MA - HOLYOKE, MA

184 HIGH STREET, SUITE 502
BOSTON, MA 02210

58H CONNECTICUT AVENUE
SOUTH WINDSOR, CT

This drawings prepared by Apex for this project are instruments of Apex's service for use solely with respect to this project, and Apex shall be deemed the author of the Drawing and shall retain all common law, statutory and other reserved rights with respect thereto, including the copyright. The Documents shall not be used on other projects, for additions to this project or for completion of this project by others, except by agreement in writing and with appropriate compensation to Apex.

PROJECT

NEW BEDFORD
MARINE COMMERCE
TERMINAL

OWNER

MASSACHUSETTS CLEAN ENERGY CENTER
55 SUMMER STREET, 9TH FLOOR
BOSTON, MASSACHUSETTS

NO.	DATE	DESCRIPTION	BY
2	03/15/12	EX. COND. UPDATE	CWM
1	12/23/11	FOR CONSTRUCTION	CHM

PROJECT NO.	6690
CADD FILE	E-3.1-E-5.3_EXISTING_CONDITIONS
DESIGNED BY	GCD
DRAWN BY	GCD
CHECKED BY	
DATE	08/04/2011
DRAWING SCALE	1"=50'

GRAPHIC SCALE

SHEET TITLE

EXISTING CONDITIONS STORMWATER DRAINAGE SWALE MITIGATION AREA

DRAWING NO.

E-5.3

DRAFT

P:\Jobs\6690 NBH_ Phase IV\PLANS\FINAL_PLANS\100% Submittal\E-3.1-E-5.3_EXISTING_CONDITIONS.DWG

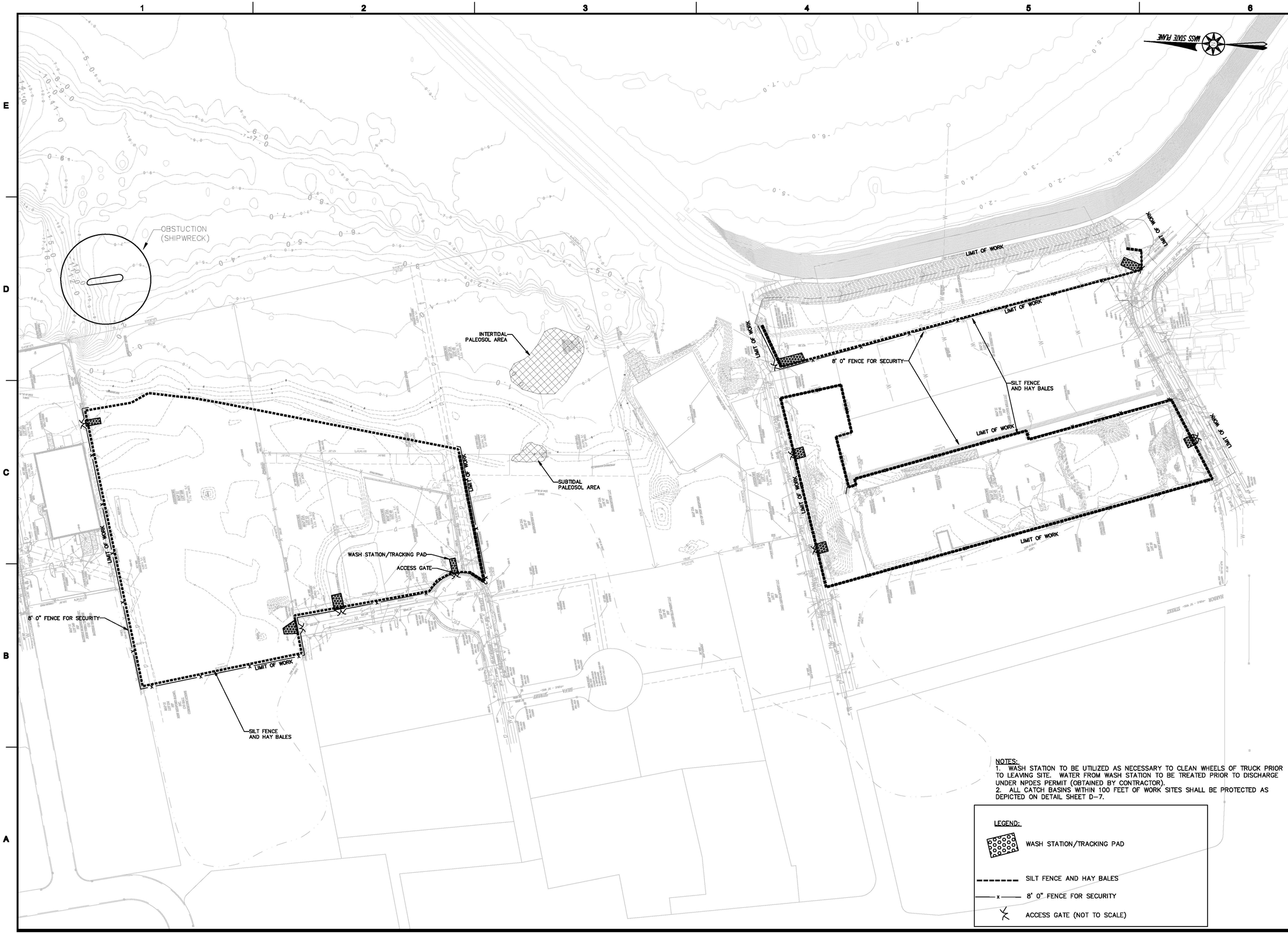

NOTES:
1. WASH STATION TO BE UTILIZED AS NECESSARY TO CLEAN WHEELS OF TRUCK PRIOR TO LEAVING SITE. WATER FROM WASH STATION TO BE TREATED PRIOR TO DISCHARGE UNDER NPDES PERMIT (OBTAINED BY CONTRACTOR).
2. ALL CATCH BASINS WITHIN 100 FEET OF WORK SITES SHALL BE PROTECTED AS DEPICTED ON DETAIL SHEET D-7.

LEGEND:

- WASH STATION/TRACKING PAD
- SILT FENCE AND HAY BALES
- 8' 0" FENCE FOR SECURITY
- ACCESS GATE (NOT TO SCALE)

APEX

ROCKVILLE, MD
SOUTH WINDSOR, CT - BOSTON, MA - NEW BEDFORD, MA - HOLYOKE, MA

184 HIGH STREET, SUITE 502
BOSTON, MA 02210

55H CONNECTICUT AVENUE
SOUTH WINDSOR, CT

This drawing is the property of the Contractor and is not to be used for any other purpose than the project and shall not be loaned, copied or disclosed without written consent of the Contractor. Ideas and designs incorporated in this document, whether or not patented, are the property of the Contractor. The Contractor shall be held harmless for any reuse of this drawing for other projects or for completion of this project by others except by agreement in writing and appropriate compensation to the Contractor.

PROJECT
NEW BEDFORD MARINE COMMERCE TERMINAL

OWNER
MASSACHUSETTS CLEAN ENERGY CENTER
55 SUMMER STREET, 9TH FLOOR
BOSTON, MASSACHUSETTS

NO.	DATE	DESCRIPTION	BY

PROJECT NO.	6690
CADD FILE	
DESIGNED BY	GCD
DRAWN BY	GCD
CHECKED BY	CMM
DATE	08/04/2011
DRAWING SCALE	1"=100'

GRAPHIC SCALE
SCALE: 1"=100'
0 50 100 150

SHEET TITLE

EROSION AND SEDIMENTATION CONTROLS PLAN

DRAWING NO.

P-1.1
DRAFT

P:\Jobs\6690 NEH_ Phase IV\PLANS\FINAL_PLANS\100% Submittal\P-1_EROSION_SEDIMENTATION_CONTROL.dwg

NOTES:
1. AREA 1 AND AREA 2 PRIMARY CONTAMINANT IS PCBS; REFER TO DATA REPORT – NEW BEDFORD MARINE COMMERCE TERMINAL FOR ANALYTICAL DATA. MAXIMUM PCB CONCENTRATION DETECTED IN AREA 1 IS 989 mg/KG AND IN AREA 2 IS 75 mg/KG.
2. AREA 3 PRIMARY CONTAMINANT IS EPH/TPH; REFFER TO DATA REPORT – NEW BEDFORD MARINE COMMERCE TERMINAL FOR ANALYTICAL DATA. MAXIMUM CONCENTRATION OF C11–C22 AROMATICS (ADJUSTED) IN AREA 3 IS 17,800 mg/KG.

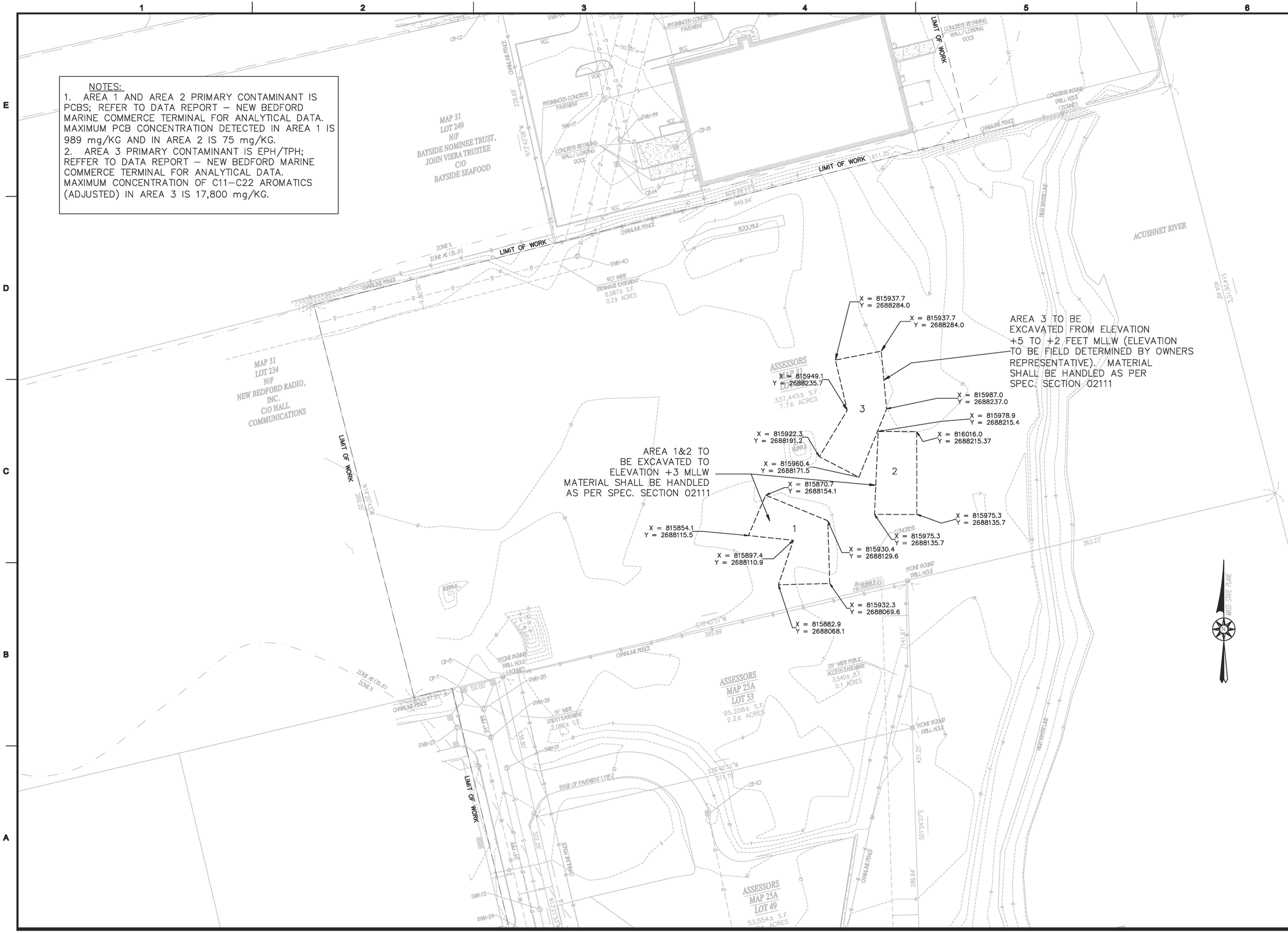

APEX

ROCKVILLE, MD
SOUTH WINDSOR, CT - BOSTON, MA - NEW BEDFORD, MA - HOLYOKE, MA

184 HIGH STREET, SUITE 502
BOSTON, MA 02210

55H CONNECTICUT AVENUE
SOUTH WINDSOR, CT

PROJECT
NEW BEDFORD MARINE COMMERCE TERMINAL

OWNER
MASSACHUSETTS CLEAN ENERGY COUNCIL
55 SUMMER STREET, 9TH FLOOR
BOSTON, MASSACHUSETTS

NO.	DATE	DESCRIPTION	BY

PROJECT NO.	6690
CADD FILE	P-2REM. EXCAP-2
DESIGNED BY	NC
DRAWN BY	CWM
CHECKED BY	CHM
DATE	8-29-11
DRAWING SCALE	1"=40'

GRAPHIC SCALE
SCALE: 1"=40'
0 20 40 80

SHEET TITLE
REMEDIAL EXCAVATION PLAN

DRAWING NO.
P-1.2
DRAFT

P:\Jobs\6690 NBH_ Phase IV\PLANS\FINAL_PLANS\100% Submittal\P-1.2_REMEDIAL_EXCAVATION.dwg

REMOVE UPLAND MATERIAL TO MEAN HIGH WATER AND STOCKPILE, PENDING DETERMINATION BY OWNERS REPRESENTATIVE AS TO SUITABILITY OF UPLAND MATERIAL FOR REUSE ONSITE, PER SECTION 02200 EARTHWORK. DISPOSE OF ANY MATERIAL DEEMED UNSUITABLE FOR REUSE ONSITE BY OWNERS REPRESENTATIVE AT AN OWNER-APPROVED OFFSITE DISPOSAL FACILITY. AFTER REMOVING UPLAND MATERIAL TO MEAN HIGH WATER, COMPACT SUBGRADE PER SECTION 02200 EARTHWORK.

NO DREDGE MATERIAL TO BE USED TO FILL WITHIN THIS AREA. AREA SHALL BE FILLED PER SECTION 0200 EARTHWORK, AND COMPACTED PER SPECIFICATION SECTION 02200.

MATERIAL PLACED BELOW MEAN HIGH WATER SHALL BE MECHANICALLY DREDGED. SHOULD THE CONTRACTOR WISH TO HYDRAULICALLY DREDGE MATERIAL TO BE PLACED BELOW MEAN HIGH WATER, THE MATERIAL SHALL FIRST BE DEWATERED AT AN UPLAND LOCATION PRIOR TO PLACEMENT.

MEAN HIGH WATER LEVEL +3.89' MLLW

ALL AREAS BELOW MEAN HIGH WATER TO BE FILLED WITH GRANULAR FILL AND DENSIFIED IN THE DRY OR WITH VIBROCOMPACTION TO ACHIEVE COMPACTION CRITERIA AS PER SECTION 02200 EARTHWORK.

NOTES:
1. CROSS SECTIONS ARE DEPICTED ON SHEET X-1.1.
2. BULKHEAD SHOWN IS FOR GENERAL REFERENCE ONLY. FOR STRUCTURAL DRAWINGS SEE DRAWING S-0 TO S-23.

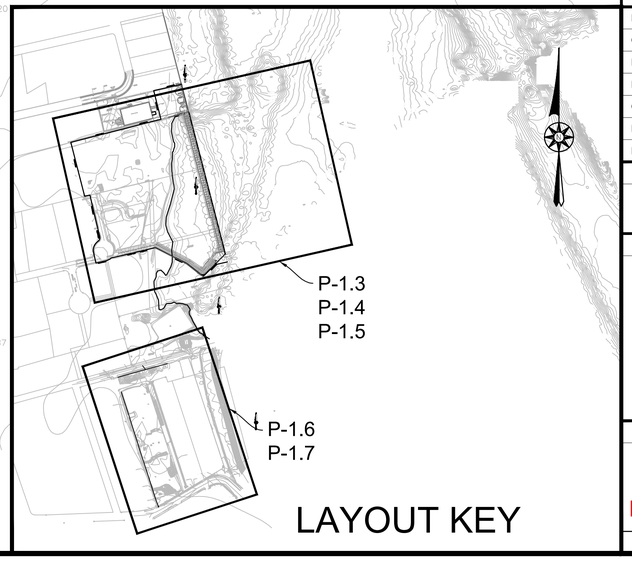

APEX
ROCKVILLE, MD
SOUTH WINDSOR, CT - BOSTON, MA - NEW BEDFORD, MA - HOLYOKE, MA

184 HIGH STREET, SUITE 502
BOSTON, MA 02210

58H CONNECTICUT AVENUE
SOUTH WINDSOR, CT

THIS DRAWINGS PREPARED BY APEX FOR THIS PROJECT ARE INSTRUMENTS OF APEX'S SERVICE FOR USE SOLELY WITH RESPECT TO THIS PROJECT, AND APEX SHALL BE DEEMED THE AUTHOR OF THE DRAWING AND SHALL RETAIN ALL COMMON LAW, STATUTORY AND OTHER RESERVED RIGHTS WITH RESPECT THERETO, INCLUDING THE COPYRIGHT. THE DOCUMENTS SHALL NOT BE USED ON OTHER PROJECTS, FOR ADDITIONS TO THIS PROJECT OR FOR COMPLETION OF THIS PROJECT BY OTHERS, EXCEPT BY AGREEMENT IN WRITING AND WITH APPROPRIATE COMPENSATION TO APEX.

GZA
GeoEnvironmental, Inc.
Engineers and Scientists
530 Broadway
Providence, RI 02909
(401) 421-4140

PROJECT
NEW BEDFORD MARINE COMMERCE TERMINAL

OWNER
MASSACHUSETTS CLEAN ENERGY CENTER
55 SUMMER STREET, 9TH FLOOR
BOSTON, MA

NO.	DATE	DESCRIPTION	BY
2.	3/16/12	MHW FILL ADJUSTED	CWM
1.	12/23/11	FOR CONSTRUCTION	TEB

PROJECT NO.	6690
CADD FILE	UPLAND_GRADING
DESIGNED BY	CWM
DRAWN BY	CWM
CHECKED BY	CHM
DATE	8-8-11
DRAWING SCALE	1"=60'

GRAPHIC SCALE
SCALE: 1"=60'
0 30 60 120

SHEET TITLE
FILL BELOW MEAN HIGH WATER PLAN

DRAWING NO.
DRAFT P-1.3

P:\Jobs\6690 NBH_ Phase IV\PLANS\FINAL_PLANS\100% Submittal\P-1.3-P-1.7_X-1.1_X-1.2UPLAND_GRADING.dwg

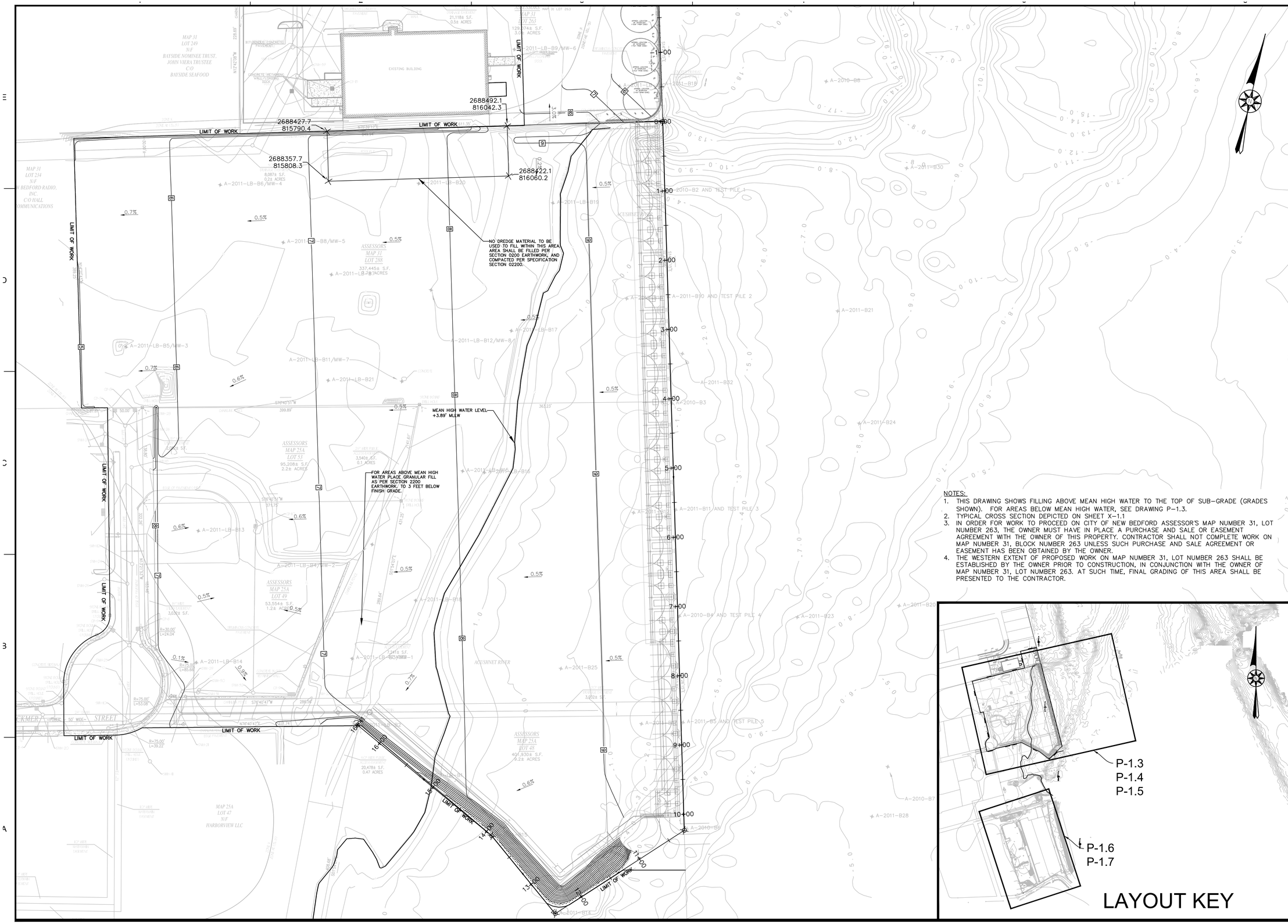

NOTES:

1. THIS DRAWING SHOWS FILLING ABOVE MEAN HIGH WATER TO THE TOP OF SUB-GRADE (GRADES SHOWN). FOR AREAS BELOW MEAN HIGH WATER, SEE DRAWING P-1.3.
2. TYPICAL CROSS SECTION DEPICTED ON SHEET X-1.1
3. IN ORDER FOR WORK TO PROCEED ON CITY OF NEW BEDFORD ASSESSOR'S MAP NUMBER 31, LOT NUMBER 263, THE OWNER MUST HAVE IN PLACE A PURCHASE AND SALE OR EASEMENT AGREEMENT WITH THE OWNER OF THIS PROPERTY. CONTRACTOR SHALL NOT COMPLETE WORK ON MAP NUMBER 31, BLOCK NUMBER 263 UNLESS SUCH PURCHASE AND SALE AGREEMENT OR EASEMENT HAS BEEN OBTAINED BY THE OWNER.
4. THE WESTERN EXTENT OF PROPOSED WORK ON MAP NUMBER 31, LOT NUMBER 263 SHALL BE ESTABLISHED BY THE OWNER PRIOR TO CONSTRUCTION, IN CONJUNCTION WITH THE OWNER OF MAP NUMBER 31, LOT NUMBER 263. AT SUCH TIME, FINAL GRADING OF THIS AREA SHALL BE PRESENTED TO THE CONTRACTOR.

APEX
ROCKVILLE, MD
SOUTH WINDSOR, CT - BOSTON, MA - NEW BEDFORD, MA - HOLYOKE, MA

184 HIGH STREET, SUITE 502
BOSTON, MA 02210

58H CONNECTICUT AVENUE
SOUTH WINDSOR, CT

THIS DRAWINGS PREPARED BY APEX FOR THIS PROJECT ARE INSTRUMENTS OF APEX'S SERVICE FOR USE SOLELY WITH RESPECT TO THIS PROJECT, AND APEX SHALL BE DEEMED THE AUTHOR OF THE DRAWING AND SHALL RETAIN ALL COMMON LAW, STATUTORY AND OTHER RESERVED RIGHTS WITH RESPECT THERETO, INCLUDING THE COPYRIGHT. THE DOCUMENTS SHALL NOT BE USED ON OTHER PROJECTS, FOR ADDITIONS TO THIS PROJECT OR FOR COMPLETION OF THIS PROJECT BY OTHERS, EXCEPT BY AGREEMENT IN WRITING AND WITH APPROPRIATE COMPENSATION TO APEX.

GZA
(401) 421-4140
GZA
GeoEnvironmental, Inc.
Engineers and Scientists
530 Broadway
Providence, RI 02909

PROJECT
NEW BEDFORD MARINE COMMERCE TERMINAL

OWNER
MASSACHUSETTS CLEAN ENERGY CENTER
55 SUMMER STREET, 9TH FLOOR
BOSTON, MA

NO.	DATE	DESCRIPTION	BY
2.	3/21/12	SUBGRADE MODIFIED	CWM
1.	12/23/11	FOR CONSTRUCTION	TEB

PROJECT NO.	6690
CADD FILE	UPLAND_GRADING
DESIGNED BY	CWM
DRAWN BY	CWM
CHECKED BY	CHM
DATE	8-8-11
DRAWING SCALE	1"=60'

GRAPHIC SCALE
SCALE: 1"=60'
0 30 60 120

SHEET TITLE
SUB-GRADE GRADING PLAN

DRAWING NO.
P-1.4
DRAFT

P:\Jobs\6690 NBH_ Phase IV\PLANS\FINAL_PLANS\100% Submittal\P-1.3-P-1.7_X-1.1_X-1.2UPLAND_GRADING.dwg

MODIFICATIONS TO THIS DRAWING ARE ON GOING. UTILITIES WILL BE ROUTED AROUND THE PROPOSED PROPERTYCONVEYANCE ON THE NORTH END OF SITE.

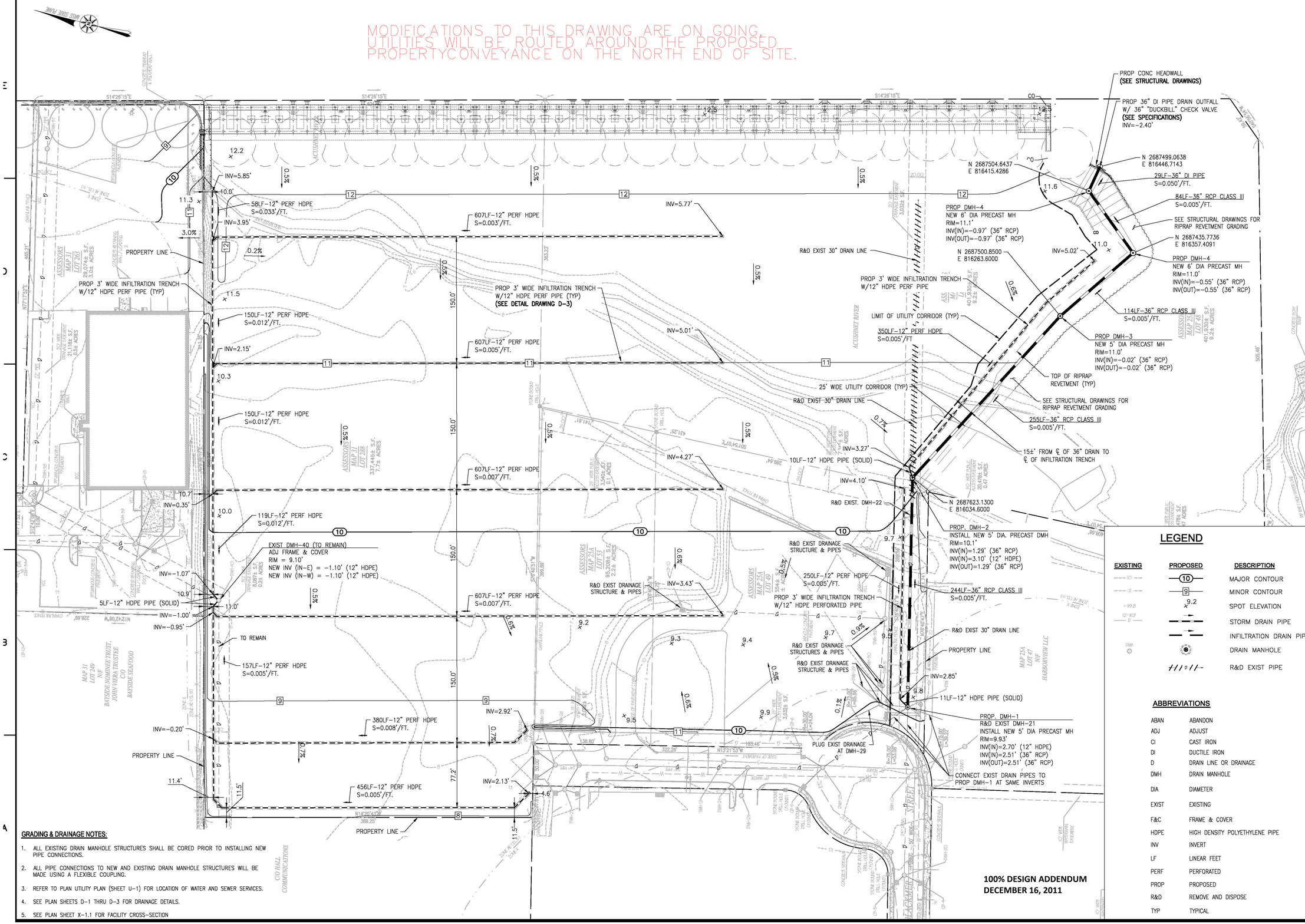

100% DESIGN ADDENDUM
DECEMBER 16, 2011

GRADING & DRAINAGE NOTES:

1. ALL EXISTING DRAIN MANHOLE STRUCTURES SHALL BE CORED PRIOR TO INSTALLING NEW PIPE CONNECTIONS.
2. ALL PIPE CONNECTIONS TO NEW AND EXISTING DRAIN MANHOLE STRUCTURES WILL BE MADE USING A FLEXIBLE COUPLING.
3. REFER TO PLAN UTILITY PLAN (SHEET U-1) FOR LOCATION OF WATER AND SEWER SERVICES.
4. SEE PLAN SHEETS D-1 THRU D-3 FOR DRAINAGE DETAILS.
5. SEE PLAN SHEET X-1.1 FOR FACILITY CROSS-SECTION

LEGEND

EXISTING	PROPOSED	DESCRIPTION
10	10	MAJOR CONTOUR
12	9	MINOR CONTOUR
+99.8	9.2	SPOT ELEVATION
12" RCP D		STORM DRAIN PIPE
		INFILTRATION DRAIN PIPE
DMH		DRAIN MANHOLE
		R&D EXIST PIPE

ABBREVIATIONS

ABAN	ABANDON
ADJ	ADJUST
CI	CAST IRON
DI	DUCTILE IRON
D	DRAIN LINE OR DRAINAGE
DMH	DRAIN MANHOLE
DIA	DIAMETER
EXIST	EXISTING
F&C	FRAME & COVER
HDPE	HIGH DENSITY POLYETHYLENE PIPE
INV	INVERT
LF	LINEAR FEET
PERF	PERFORATED
PROP	PROPOSED
R&D	REMOVE AND DISPOSE
TYP	TYPICAL

APEX

ROCKVILLE, MD
SOUTH WINDSOR, CT - BOSTON, MA - NEW BEDFORD, MA - HOLYOKE, MA

184 HIGH STREET, SUITE 502
BOSTON, MA 02210

58H CONNECTICUT AVENUE
SOUTH WINDSOR, CT

This drawings prepared by Apex for this project are instruments of Apex's service for use solely with respect to this project, and Apex shall be deemed the author of the Drawing and shall retain all common law, statutory and other reserved rights with respect thereto, including the copyright. The Documents shall not be used on other projects, for additions to this project or for completion of this project by others, except by agreement in writing and with appropriate compensation to Apex.

Maguire Group Inc.
Architects / Engineers / Planners
225 Chapman Street, 4th Floor
Providence,Rhode Island 02905
401-272-6000
www.maguiregroup.com

PROJECT
NEW BEDFORD MARINE COMMERCE TERMINAL

OWNER
MASSACHUSETTS CLEAN ENERGY CENTER
55 SUMMER STREET, 9TH FLOOR
BOSTON, MASSACHUSETTS

NO.	DATE	DESCRIPTION	BY

PROJECT NO.	6690
CADD FILE	
DESIGNED BY	JTS
DRAWN BY	JTS
CHECKED BY	JAJ
DATE	11/29/11
DRAWING SCALE	1"=50'

GRAPHIC SCALE
SCALE: 1"=50'
0 25 50 100

SHEET TITLE
GRADING AND DRAINAGE PLAN

DRAWING NO.
P-1.5
DRAFT

NOT FOR CONSTRUCTION

PLOT SCALE 1/16"=1'-0"

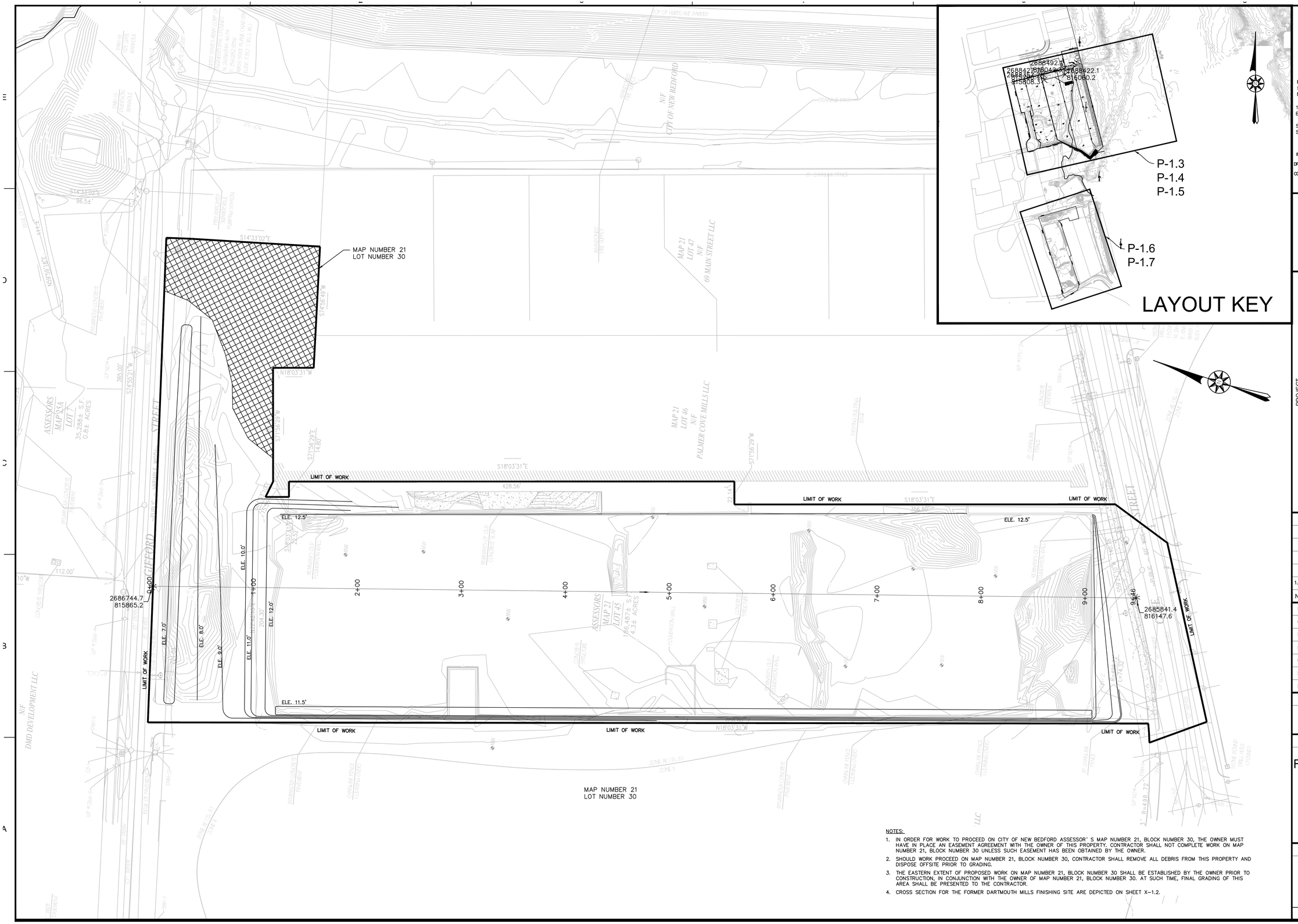

NOTES:

1. IN ORDER FOR WORK TO PROCEED ON CITY OF NEW BEDFORD ASSESSOR' S MAP NUMBER 21, BLOCK NUMBER 30, THE OWNER MUST HAVE IN PLACE AN EASEMENT AGREEMENT WITH THE OWNER OF THIS PROPERTY. CONTRACTOR SHALL NOT COMPLETE WORK ON MAP NUMBER 21, BLOCK NUMBER 30 UNLESS SUCH EASEMENT HAS BEEN OBTAINED BY THE OWNER.
2. SHOULD WORK PROCEED ON MAP NUMBER 21, BLOCK NUMBER 30, CONTRACTOR SHALL REMOVE ALL DEBRIS FROM THIS PROPERTY AND DISPOSE OFFSITE PRIOR TO GRADING.
3. THE EASTERN EXTENT OF PROPOSED WORK ON MAP NUMBER 21, BLOCK NUMBER 30 SHALL BE ESTABLISHED BY THE OWNER PRIOR TO CONSTRUCTION, IN CONJUNCTION WITH THE OWNER OF MAP NUMBER 21, BLOCK NUMBER 30. AT SUCH TIME, FINAL GRADING OF THIS AREA SHALL BE PRESENTED TO THE CONTRACTOR.
4. CROSS SECTION FOR THE FORMER DARTMOUTH MILLS FINISHING SITE ARE DEPICTED ON SHEET X-1.2.

APEX
ROCKVILLE, MD
SOUTH WINDSOR, CT - BOSTON, MA - NEW BEDFORD, MA - HOLYOKE, MA

184 HIGH STREET, SUITE 502
BOSTON, MA 02210

58H CONNECTICUT AVENUE
SOUTH WINDSOR, CT

THIS DRAWINGS PREPARED BY APEX FOR THIS PROJECT ARE INSTRUMENTS OF APEX'S SERVICE FOR USE SOLELY WITH RESPECT TO THIS PROJECT, AND APEX SHALL BE DEEMED THE AUTHOR OF THE DRAWING AND SHALL RETAIN ALL COMMON LAW, STATUTORY AND OTHER RESERVED RIGHTS WITH RESPECT THERETO, INCLUDING THE COPYRIGHT. THE DOCUMENTS SHALL NOT BE USED ON OTHER PROJECTS, FOR ADDITIONS TO THIS PROJECT OR FOR COMPLETION OF THIS PROJECT BY OTHERS, EXCEPT BY AGREEMENT IN WRITING AND WITH APPROPRIATE COMPENSATION TO APEX.

PROJECT
NEW BEDFORD MARINE COMMERCE TERMINAL

OWNER
MASSACHUSETTS CLEAN ENERGY CENTER
55 SUMMER STREET, 9TH FLOOR
BOSTON, MA

NO.	DATE	DESCRIPTION	BY
1.	12/23/11	FOR CONSTRUCTION	TEB

PROJECT NO.	6690
CADD FILE	UPLAND_GRADING
DESIGNED BY	CWM
DRAWN BY	CWM
CHECKED BY	CHM
DATE	8-8-11
DRAWING SCALE	1"=40'

GRAPHIC SCALE
SCALE: 1"=40'
0 20 40 80

SHEET TITLE
FORMER DARTMOUTH FINISHING SITE SUB-GRADE GRADING PLAN

DRAWING NO.
P-1.6
DRAFT

1"=1'-0"

P:\Jobs\6690 NBH_ Phase IV\PLANS\FINAL_PLANS\100% Submittal\P-1.3-P-1.7_X-1.1_X-1.2UPLAND_GRADING.dwg

NOTES:

1. IN ORDER FOR WORK TO PROCEED ON CITY OF NEW BEDFORD ASSESSOR' S MAP NUMBER 21, LOT NUMBER 30, THE OWNER MUST HAVE IN PLACE AN EASEMENT AGREEMENT WITH THE OWNER OF THIS PROPERTY. CONTRACTOR SHALL NOT COMPLETE WORK ON MAP NUMBER 21, LOT NUMBER 30 UNLESS SUCH EASEMENT HAS BEEN OBTAINED BY THE OWNER.
2. SHOULD WORK PROCEED ON MAP NUMBER 21, LOT NUMBER 30, CONTRACTOR SHALL REMOVE ALL DEBRIS FROM THIS PROPERTY AND DISPOSE OFFSITE PRIOR TO GRADING.
3. THE EASTERN EXTENT (HATCHED AREA) OF PROPOSED WORK ON MAP NUMBER 21, LOT NUMBER 30 SHALL BE ESTABLISHED BY THE OWNER PRIOR TO CONSTRUCTION, IN CONJUNCTION WITH THE OWNER OF MAP NUMBER 21, LOT NUMBER 30. AT SUCH TIME, FINAL GRADING OF THIS AREA SHALL BE PRESENTED TO THE CONTRACTOR.
4. CROSS SECTION FOR THE FORMER DARTMOUTH MILLS FINISHING SITE ARE DEPICTED ON SHEET X-1.2.

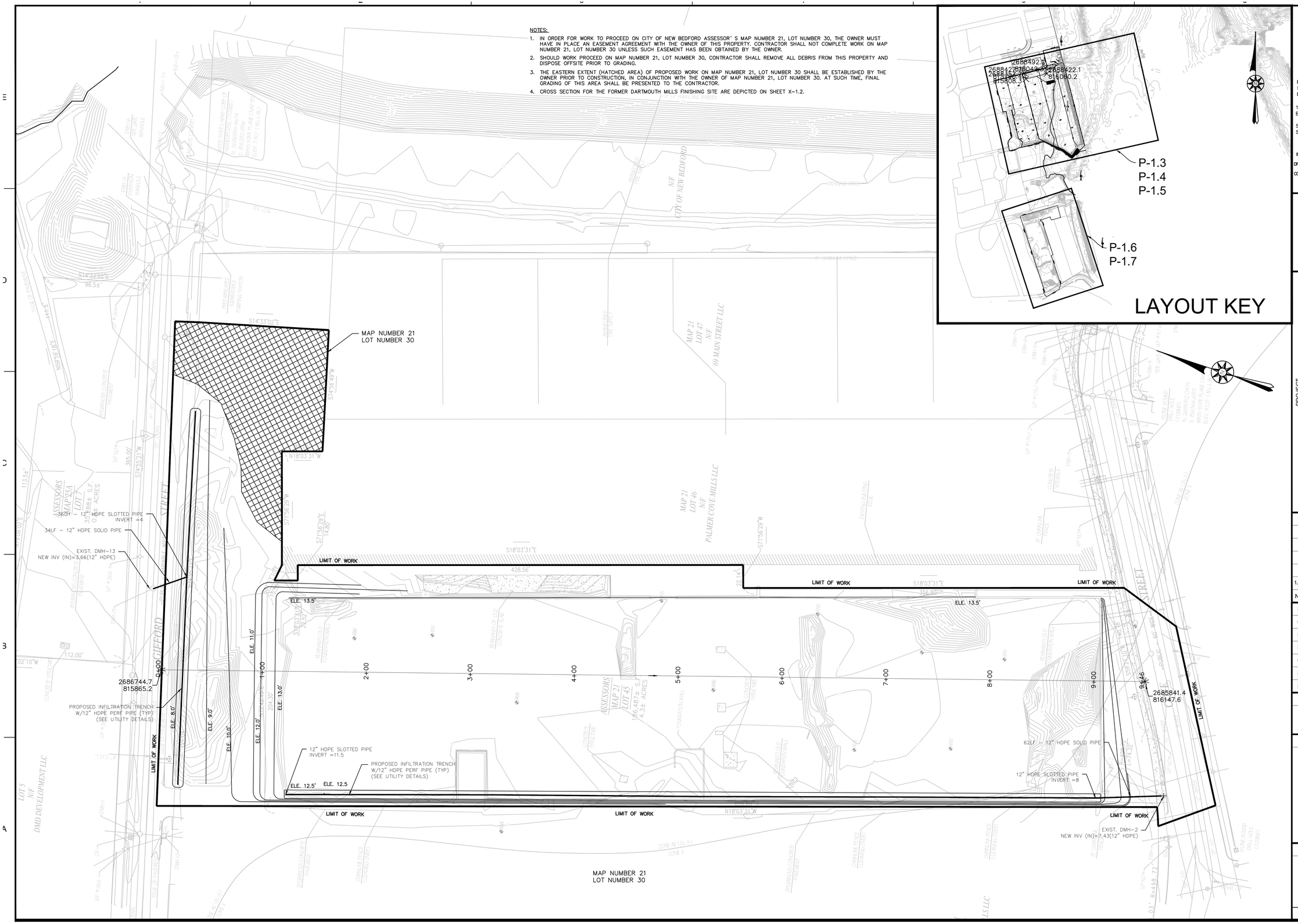

APEX

ROCKVILLE, MD
SOUTH WINDSOR, CT - BOSTON, MA -
NEW BEDFORD, MA - HOLYOKE, MA

184 HIGH STREET, SUITE 502
BOSTON, MA 02210

58H CONNECTICUT AVENUE
SOUTH WINDSOR, CT

THIS DRAWINGS PREPARED BY APEX FOR THIS PROJECT ARE INSTRUMENTS OF APEX'S SERVICE FOR USE SOLELY WITH RESPECT TO THIS PROJECT, AND APEX SHALL BE DEEMED THE AUTHOR OF THE DRAWING AND SHALL RETAIN ALL COMMON LAW, STATUTORY AND OTHER RESERVED RIGHTS WITH RESPECT THERETO, INCLUDING THE COPYRIGHT. THE DOCUMENTS SHALL NOT BE USED ON OTHER PROJECTS, FOR ADDITIONS TO THIS PROJECT OR FOR COMPLETION OF THIS PROJECT BY OTHERS, EXCEPT BY AGREEMENT IN WRITING AND WITH APPROPRIATE COMPENSATION TO APEX.

PROJECT
NEW BEDFORD
MARINE COMMERCE
TERMINAL

OWNER
MASSACHUSETTS CLEAN ENERGY CENTER
55 SUMMER STREET, 9TH FLOOR
BOSTON, MA

NO.	DATE	DESCRIPTION	BY
1.	12/23/11	FOR CONSTRUCTION	TEB

PROJECT NO.	6690
CADD FILE	UPLAND_GRADING
DESIGNED BY	CWM
DRAWN BY	CWM
CHECKED BY	CHM
DATE	8-8-11
DRAWING SCALE	1"=40'

GRAPHIC SCALE
SCALE: 1"=40'
0 20 40 80

SHEET TITLE

FORMER DARTMOUTH FINISHING SITE FINAL GRADING PLAN

DRAWING NO.

P-1.7

DRAFT

P:\Jobs\6690 NBH_ Phase IV\PLANS\FINAL_PLANS\100% Submittal\P-1.3-P-1.7_X-1.1_X-1.2UPLAND_GRADING.dwg

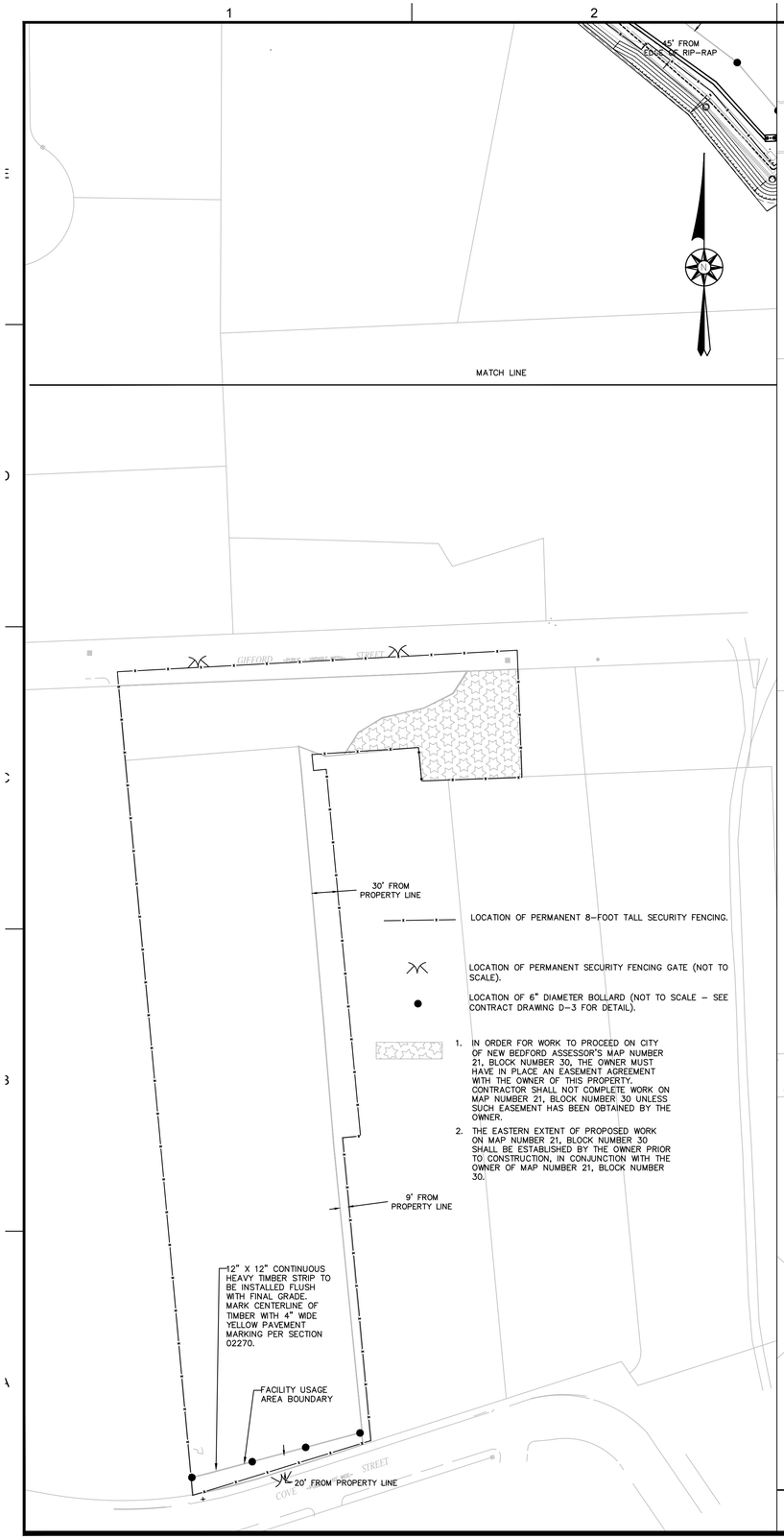

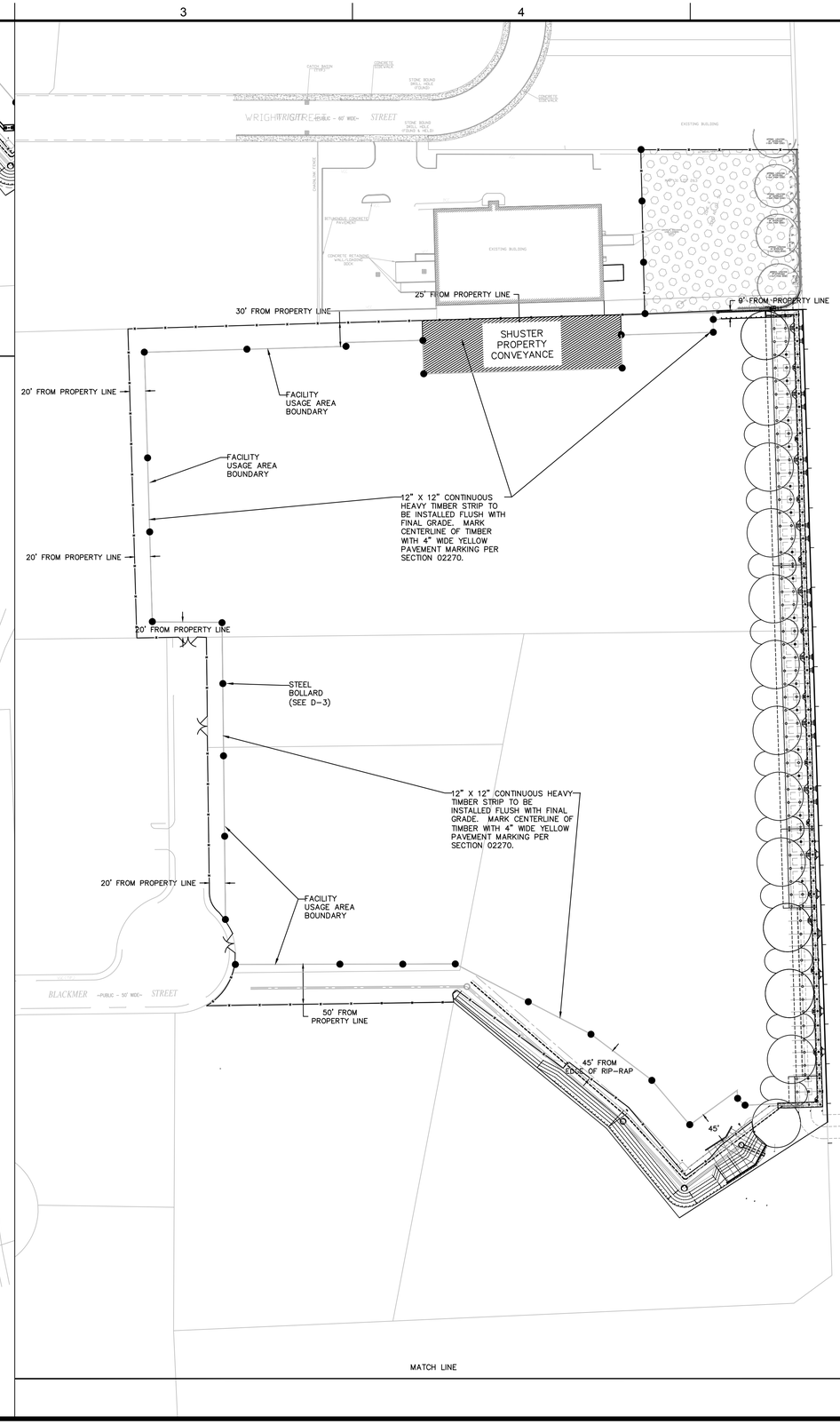

HATCHED AREA NOTES:

1. IN ORDER FOR WORK TO PROCEED ON CITY OF NEW BEDFORD ASSESSOR' S MAP NUMBER 31, LOT NUMBER 263, THE OWNER MUST HAVE IN PLACE AN EASEMENT AGREEMENT WITH THE OWNER OF THIS PROPERTY. CONTRACTOR SHALL NOT COMPLETE WORK ON MAP NUMBER 31, LOT NUMBER 263 UNLESS SUCH EASEMENT HAS BEEN OBTAINED BY THE OWNER.
2. SHOULD WORK PROCEED ON MAP NUMBER 31, LOT NUMBER 263, CONTRACTOR SHALL REMOVE ALL DEBRIS FROM THIS PROPERTY AND DISPOSE OFFSITE PRIOR TO GRADING.
3. THE EXTENT (HATCHED AREA) OF PROPOSED WORK ON MAP NUMBER 31, LOT NUMBER 263 SHALL BE ESTABLISHED BY THE OWNER PRIOR TO CONSTRUCTION, IN CONJUNCTION WITH THE OWNER OF MAP NUMBER 31, LOT NUMBER 263. AT SUCH TIME, FINAL GRADING OF THIS AREA SHALL BE PRESENTED TO THE CONTRACTOR.

LOCATION OF PERMANENT 8-FOOT TALL SECURITY FENCING.

LOCATION OF PERMANENT SECURITY FENCING GATE (NOT TO SCALE).

LOCATION OF 6" DIAMETER BOLLARD (NOT TO SCALE – SEE CONTRACT DRAWING D-3 FOR DETAIL).

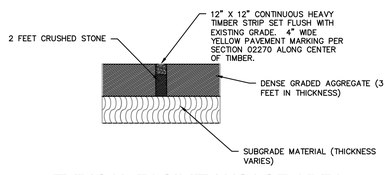

TYPICAL FACILITY USAGE AREA BOUNDARY DETAIL

NTS

NOTES:

1). BOLLARD LOCATIONS AS SHOWN ON PLAN.
2). FOR BOLLARD DETAIL, SEE DETAIL DRAWING D-3.

APEX
ROCKVILLE, MD
SOUTH WINDSOR, CT - BOSTON, MA - NEW BEDFORD, MA - HOLYOKE, MA

184 HIGH STREET, SUITE 502
BOSTON, MA 02210

58H CONNECTICUT AVENUE
SOUTH WINDSOR, CT

The drawings prepared by Apex for this project are instruments of Apex's service for use solely with respect to this project, and Apex shall be deemed the author of the Drawing and shall retain all common law, statutory, and other reserved rights with respect thereto, including the copyright. The Documents shall not be used on other projects, for additions to this project or for completion of this project by others, except by agreement in writing and with appropriate compensation to Apex. .

PROJECT
NEW BEDFORD MARINE COMMERCE TERMINAL

OWNER
MASSACHUSETTS CLEAN ENERGY CENTER
55 SUMMER STREET, 9TH FLOOR
BOSTON, MA

NO.	DATE	DESCRIPTION	BY
2.	3/22/12	MARKINGS REMOVED	CWM
1.	12/23/11	FOR CONSTRUCTION	TEB

PROJECT NO.	6690
CADD FILE	UPLAND_GRADING
DESIGNED BY	CWM
DRAWN BY	CWM
CHECKED BY	CHM
DATE	11-16-11
DRAWING SCALE	1"=80'

GRAPHIC SCALE
SCALE: 1"=80'
0 40 80 160

SHEET TITLE
FACILITY USAGE AREA MARKINGS

DRAWING NO.
P-1.8
DRAFT

P:\Jobs\6690 NBH_ Phase IV\PLANS\FINAL_PLANS\100% Submittal\P-1.8_FACILITY_USAGE_AREA_MARKINGS.dwg

NOTES:

1. MATERIAL TO BE DREDGED AS SHOWN ON CONTRACT DRAWINGS "P–2.1 TOP OF DREDGE FOOTPRINT PLAN 1" AND "P–2.2 TOP OF DREDGE FOOTPRINT PLAN 2" SHALL BE DREDGED AND DISPOSED INTO CAD CELL #3.
2. MATERIAL TO BE DREDGED AS SHOWN ON CONTRACT DRAWINGS "P–2.1 TOP OF DREDGE FOOTPRINT PLAN 1" AND "P–2.2 TOP OF DREDGE FOOTPRINT PLAN 2" SHALL BE DREDGED AND DISPOSED INTO CAD CELL #3 BEFORE MATERIAL TO BE DREDGED AS SHOWN ON CONTRACT DRAWINGS "P–2.3 INTERMEDIATE DREDGE FOOTPRINT PLAN 1" AND P–2.4 INTERMEDIATE DREDGE FOOTPRINT PLAN 2" IS DREDGED.
3. MATERIAL TO BE DREDGED AS SHOWN ON CONTRACT DRAWINGS "P–2.3 INTERMEDIATE DREDGE FOOTPRINT PLAN 1" AND "P–2.4 INTERMEDIATE DREDGE FOOTPRINT PLAN 2" SHALL NOT BE DREDGED UNTIL MATERIAL TO BE DREDGED AS SHOWN ON CONTRACT DRAWINGS "P–2.1 TOP OF DREDGE FOOTPRINT PLAN 1" AND "P–2.2 TOP OF DREDGE FOOTPRINT PLAN 2" HAS BEEN DREDGED AND DISPOSED INTO CAD CELL #3.
4. ALSO SEE DRAWINGS P–2.2, P–2.3, P–2.4, P–2.5, AND P–2.6.
5. FOR DREDGE CROSS SECTIONS SEE DRAWINGS X–2.1 AND X–2.2. FOR LOCATIONS OF DREDGE CROSS SECTIONS, SEE DRAWINGS P–2.5 AND P–2.6.

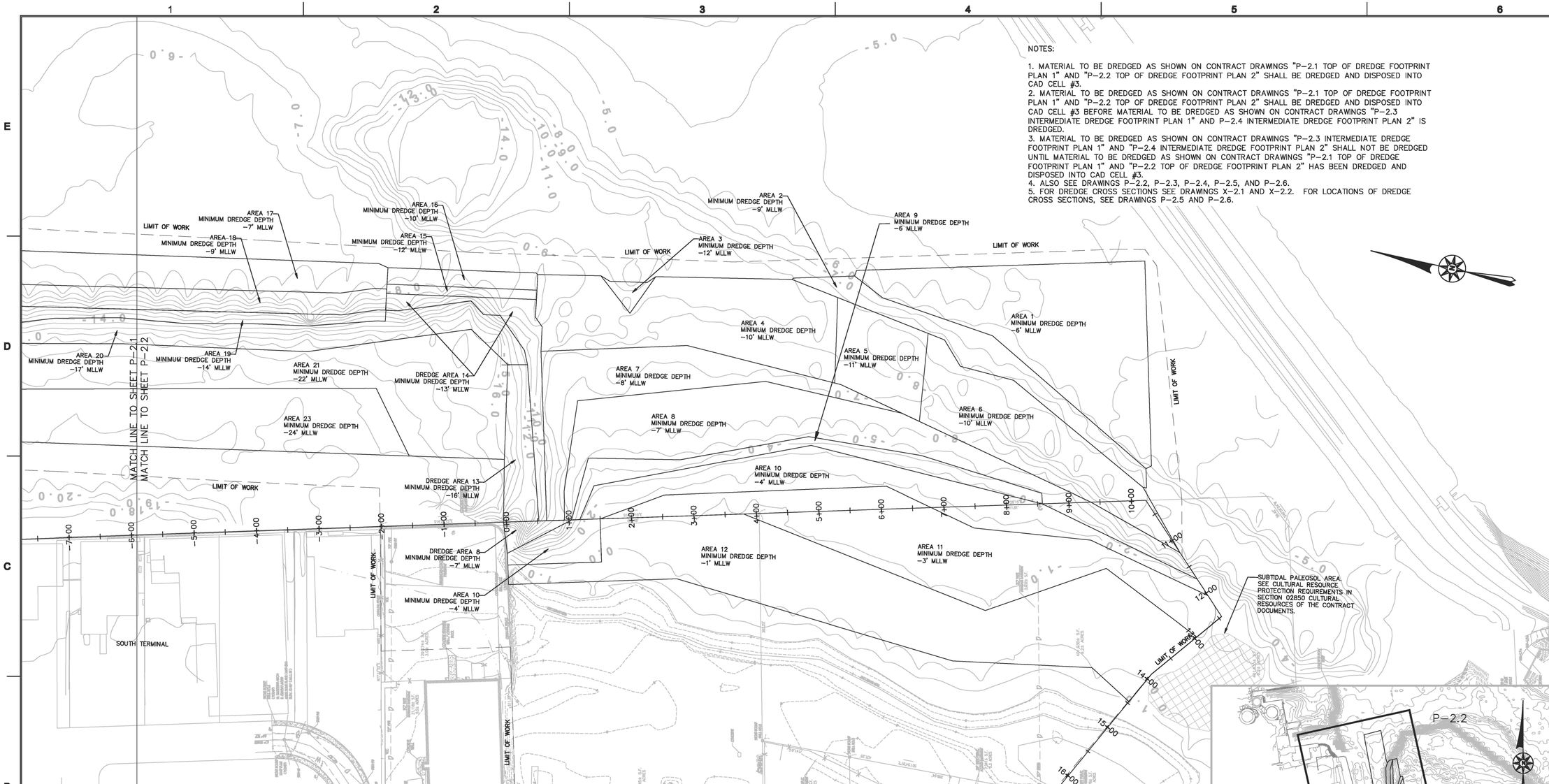

AREA 1		AREA 4 (CONT.)		AREA 7 (CONT.)		AREA 9 (CONT.)		AREA 12		AREA 14 (CONT.)		AREA 18		AREA 19 (CONT.)		AREA 20 (CONT.)		AREA 22	
X=816773.7442	Y=2688088.1407	X=816694.3779	Y=2688399.2312	X=816275.7469	Y=2688485.1896	X=816288.7434	Y=2688433.9722	X=816319.2693	Y=2687429.7574	X=816576.7701	Y=2688559.4657	X=816387.7088	Y=2689912.4291	X=816396.5598	Y=2689914.0596	X=816319.3198	Y=2690085.2047	X=816255.8401	Y=2690075.3554
X=816888.0645	Y=2687641.1172	X=816628.1936	Y=2688427.0031	X=816282.4750	Y=2688457.5426	AREA 10		X=816245.3437	Y=2687487.7646	X=816589.7096	Y=2688573.4387	X=816419.7621	Y=2689918.3337	X=816362.8706	Y=2690095.3594	X=816332.6500	Y=2689657.8526	X=816200.9408	Y=2690374.8289
X=816570.3589	Y=2687559.8682	X=816676.8886	Y=2688485.4051	X=816327.8275	Y=2688468.1350	X=816285.2639	Y=2688446.6668	X=816194.9543	Y=2687513.2873	X=816617.3632	Y=2688577.7218	X=816423.5131	Y=2689897.9714	X=816319.3198	Y=2690085.2047	X=816378.6031	Y=2689447.3213	X=816032.7325	Y=2690331.9714
X=816564.2935	Y=2687567.573	X=816656.8168	Y=2688584.3035	X=816473.5958	Y=2688478.4339	X=816288.7434	Y=2688433.9722	X=816235.0670	Y=2687582.9300	X=816574.8861	Y=2688814.0044	X=816405.9401	Y=2689866.4097	X=816332.6500	Y=2689657.8526	X=816421.2830	Y=2689324.0000	X=816150.0810	Y=2689695.4008
X=816718.6368	Y=2687853.021	X=816589.7098	Y=2688573.4388	X=816568.9019	Y=2688191.7202	X=816346.4784	Y=2688423.2605	X=816197.3778	Y=2687803.0498	X=816548.4799	Y=2688809.2850	X=816398.2017	Y=2689836.6597	X=816378.0863	Y=2689447.2098	X=816444.6904	Y=2689222.5249	X=816258.8791	Y=2689712.6784
X=816739.9621	Y=2688037.7404	X=816576.7701	Y=2688559.4657	AREA 8		X=816484.7068	Y=2688098.3319	X=816229.9883	Y=2688261.8401	AREA 15		X=816431.8497	Y=2689653.9996	X=816421.2830	Y=2689324.0000	X=816458.0878	Y=2689119.3183	X=816251.9276	Y=2690001.2153
X=816764.2209	Y=2688089.0541	X=816538.1020	Y=2688552.7275	X=816282.4750	2688457.5400	X=816473.5373	Y=2687716.9369	X=816162.8146	Y=2688522.7544	X=816632.1899	Y=2688580.0183	X=816400.139	Y=2689529.4198	X=816444.6904	Y=2689222.5249	X=816481.6140	Y=2689011.3650	X=816267.4482	Y=2690052.2815
AREA 2		X=816597.7420	Y=2688326.4731	X=816327.8275	Y=2688468.1350	X=816409.8311	Y=2687449.4289	X=816192.9784	Y=2688530.5202	X=816617.3632	Y=2688577.7218	X=816453.1413	Y=2689436.2051	X=816458.0878	Y=2689119.3183	X=816497.4877	Y=2688923.6410	AREA 23	
X=816764.2209	Y=2688089.0541	X=816590.1344	Y=2688083.1296	X=816473.5958	Y=2688478.4339	X=816387.5508	Y=2687426.6966	X=816230.2207	Y=2688385.3352	X=816574.8861	Y=2688814.0044	X=816559.8409	Y=2688885.7625	X=816481.6140	Y=2689011.3650	X=816529.0830	Y=2688818.5483	X=816150.0810	Y=2689695.4008
X=816740.0365	Y=2688183.6216	AREA 5		X=816568.9019	Y=2688191.7202	X=816433.6500	Y=2687628.8728	X=816297.0544	Y=2688402.4275	X=816589.7130	Y=2688816.3008	X=816579.0737	Y=2688833.8913	X=816497.4877	Y=2688923.6410	AREA 21		X=816329.0010	Y=2688722.2408
X=816737.3331	Y=2688185.7028	X=816724.8298	Y=2688108.0709	X=816566.2663	Y=2687967.7480	X=816412.1869	Y=2687815.2495	X=816354.3658	Y=2688179.8199	AREA 16		X=816581.9836	Y=2688815.1037	AREA 20		X=816219.4483	Y=2689706.4166	X=816423.4126	Y=2688797.2060
X=816695.6083	Y=2687926.637	X=816590.1344	Y=2688083.1296	X=816493.3405	Y=2687642.6433	X=816446.9807	Y=2687966.5007	X=816287.1494	Y=2687769.2422	X=816656.8168	Y=2688584.3035	X=816548.602	Y=2688809.5683	X=816529.0830	Y=2688818.5483	X=816423.4126	Y=2688797.2060	X=816219.4483	Y=2689706.4166
X=816659.8265	Y=2687892.8305	X=816589.8083	Y=2688072.6987	X=816445.0594	Y=2687485.3716	X=816356.2986	Y=2688310.8518	X=816394.9282	Y=2687594.9245	X=816658.822	Y=2688587.4672	X=816546.2569	Y=2688821.7235	X=816531.2877	Y=2688806.2124	X=816329.0010	Y=2688722.2408		
X=816656.3573	Y=2687804.7782	X=816559.5231	Y=2687937.6865	X=816409.8311	Y=2687449.4289	X=816297.0544	Y=2688402.4275	AREA 13		X=816615.8668	Y=2688820.6403	X=816526.0265	Y=2688876.285	X=816548.6802	Y=2688809.0964	X=816356.5383	Y=2688572.4633		
X=816533.9658	Y=2687565.5312	X=816700.0718	Y=2687954.3507	X=816473.5399	Y=2687716.9270	X=816238.9252	Y=2688387.5613	X=816258.5030	Y=2688552.1678	X=816589.713	Y=2688816.3008	X=816419.5575	Y=2689425.5381	X=816551.7643	Y=2688790.4976	X=816505.7240	Y=2688599.9336		
X=816534.4138	Y=2687559.8197	AREA 6		X=816489.7040	Y=2687721.5676	X=816201.5514	Y=2688532.7274	X=816356.5383	Y=2688572.4633	X=816632.1899	Y=2688580.0183	X=816373.7548	Y=2689527.1136	X=816592.6879	Y=2688679.4939	X=816548.3108	Y=2688669.2648		
X=816534.4138	Y=2687559.8197	X=816700.0718	Y=2687954.3507	X=816507.0269	Y=2687922.9533	AREA 11		X=816505.7240	Y=2688599.9336	AREA 17		X=816406.271	Y=2689654.8578	X=816575.4427	Y=2688655.0499	X=816456.6735	Y=2688917.8271		
X=816564.2935	Y=2687567.573	X=816695.6083	Y=2687926.6370	X=816497.5278	Y=2688105.0489	X=816297.0544	Y=2688402.4275	X=816512.3113	Y=2688569.0594	X=816615.8668	Y=2688820.6403	X=816372.6105	Y=2689837.5853	X=816580.0114	Y=2688628.9156	X=816405.4663	Y=2689207.0160		
X=816718.6368	Y=2687853.021	X=816659.8265	Y=2687892.8305	X=816417.0225	Y=2688297.4863	X=816356.2986	Y=2688310.8518	X=816272.6086	Y=2688497.3791	X=816619.0435	Y=2688836.5257	AREA 19		X=816533.7748	Y=2688578.7996	X=816306.1663	Y=2689661.9534		
X=816739.9621	Y=2688037.7404	X=816656.3573	Y=2687804.7782	AREA 9		X=816446.9807	Y=2687966.5007	AREA 14		X=816423.5131	Y=2689897.9714	X=816529.0830	Y=2688818.5483	X=816512.3113	Y=2688569.0594	X=816293.5016	Y=2689979.2904		
AREA 3		X=816533.9658	Y=2687565.5312	X=816285.2639	Y=2688446.6668	X=816412.1869	Y=2687815.2495	X=816551.7643	Y=2688790.4976	X=816423.5131	Y=2689897.9714	X=816531.2877	Y=2688806.2124	X=816505.7240	Y=2688599.9336	X=816319.3198	Y=2690085.2047		
X=816676.8886	Y=2688485.4051	X=816445.0594	Y=2687485.3716	X=816387.5954	Y=2688441.9398	X=816433.6500	Y=2687628.8728	X=816592.6879	Y=2688679.4939	X=816405.9401	Y=2689866.4097	X=816548.6802	Y=2688809.0964	X=816548.3108	Y=2688669.2648	X=816319.3198	Y=2690085.2047		
X=816671.4083	Y=2688469.4631	X=816493.3405	Y=2687642.6433	X=816416.8466	Y=2688297.9067	X=816387.5508	Y=2687426.6966	X=816575.4427	Y=2688655.0499	X=816398.2017	Y=2689836.6597	X=816546.2569	Y=2688821.7235	X=816500.5075	Y=2688798.9291	X=816287.5527	Y=2690079.6342		
X=816682.2063	Y=2688410.8454	X=816559.5231	Y=2687937.6865	X=816497.5278	Y=2688105.0489	X=816359.5399	Y=2687398.1583	X=816580.0114	Y=2688628.9156	X=816431.8497	Y=2689653.9996	X=816526.0265	Y=2688876.2850	X=816456.6735	Y=2688917.8271	X=816267.4482	Y=2690052.2815		
X=816694.3779	Y=2688399.2312	AREA 7		X=816507.0269	Y=2687922.9533	X=816319.2693	Y=2687429.7574	X=816533.7748	Y=2688578.7996	X=816400.139	Y=2689529.4198	X=816472.7920	Y=2689150.9116	X=816405.4663	Y=2689207.0160	X=816251.9276	Y=2690001.2153		
X=816628.1936	Y=2688427.0031	X=816566.2663	Y=2687967.7480	X=816489.7040	Y=2687721.5676	X=816394.9282	Y=2687594.9245	X=816512.3113	Y=2688569.0594	X=816453.1413	Y=2689436.2051	X=816419.5575	Y=2689425.5381	X=816306.1663	Y=2689661.9534	X=816258.8791	Y=2689712.6784		
AREA 4		X=816589.8083	Y=2688072.6987	X=816473.5399	Y=2687716.9275	X=816287.1494	Y=2687769.2422	X=816272.6087	Y=2688497.3788	X=816559.8409	Y=2688885.7625	X=816373.7548	Y=2689527.1136	X=816306.1663	Y=2689661.9534	X=816258.8791	Y=2689712.6784		
X=816724.8298	Y=2688108.0709	X=816597.7420	Y=2688326.4731	X=816484.7068	Y=2688098.3319	X=816354.3658	Y=2688179.8199	X=816275.7469	Y=2688485.1896	X=816579.0737	Y=2688833.8913	X=816406.2710	Y=2689654.8578	X=816293.5016	Y=2689979.2904				
X=816737.3331	Y=2688185.7028	X=816538.1003	Y=2688552.7339	X=816346.4784	Y=2688423.2605			X=816538.0204	Y=2688552.7133	X=816581.9836	Y=2688815.1037	X=816372.6105	Y=2689837.5853	X=816315.6844	Y=2690070.2914				

APEX

ROCKVILLE, MD
SOUTH WINDSOR, CT - BOSTON, MA - NEW BEDFORD, MA - HOLYOKE, MA

184 HIGH STREET, SUITE 502
BOSTON, MA 02210

55H CONNECTICUT AVENUE
SOUTH WINDSOR, CT

PROJECT
NEW BEDFORD MARINE COMMERCE TERMINAL

OWNER
MASSACHUSETTS CLEAN ENERGY CENTER
55 SUMMER STREET, 9TH FLOOR
BOSTON, MASSACHUSETTS

NO.	DATE	DESCRIPTION	BY
1.	12–23–11	FOR CONSTRUCTION	CHM

PROJECT NO.	6690
CADD FILE	B_I_DREDGE
DESIGNED BY	GCD
DRAWN BY	CWM
CHECKED BY	CHM
DATE	8/30/11
DRAWING SCALE	1"=80'

GRAPHIC SCALE
SCALE: 1"=80'
0 40 80 160

SHEET TITLE
TOP OF DREDGE FOOTPRINT PLAN 1

DRAWING NO.
P-2.1
DRAFT

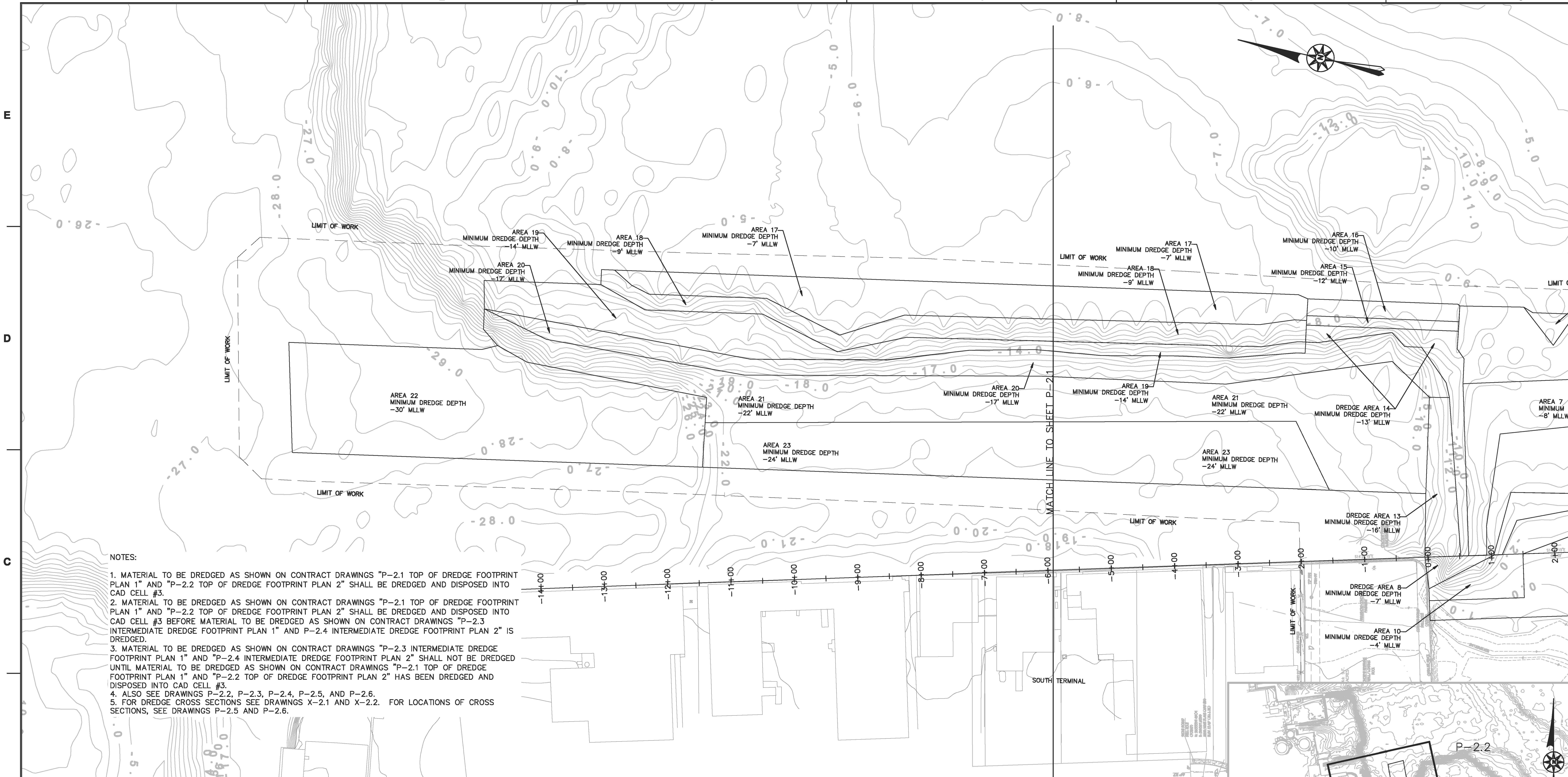

NOTES:

1. MATERIAL TO BE DREDGED AS SHOWN ON CONTRACT DRAWINGS "P-2.1 TOP OF DREDGE FOOTPRINT PLAN 1" AND "P-2.2 TOP OF DREDGE FOOTPRINT PLAN 2" SHALL BE DREDGED AND DISPOSED INTO CAD CELL #3.
2. MATERIAL TO BE DREDGED AS SHOWN ON CONTRACT DRAWINGS "P-2.1 TOP OF DREDGE FOOTPRINT PLAN 1" AND "P-2.2 TOP OF DREDGE FOOTPRINT PLAN 2" SHALL BE DREDGED AND DISPOSED INTO CAD CELL #3 BEFORE MATERIAL TO BE DREDGED AS SHOWN ON CONTRACT DRAWINGS "P-2.3 INTERMEDIATE DREDGE FOOTPRINT PLAN 1" AND P-2.4 INTERMEDIATE DREDGE FOOTPRINT PLAN 2" IS DREDGED.
3. MATERIAL TO BE DREDGED AS SHOWN ON CONTRACT DRAWINGS "P-2.3 INTERMEDIATE DREDGE FOOTPRINT PLAN 1" AND "P-2.4 INTERMEDIATE DREDGE FOOTPRINT PLAN 2" SHALL NOT BE DREDGED UNTIL MATERIAL TO BE DREDGED AS SHOWN ON CONTRACT DRAWINGS "P-2.1 TOP OF DREDGE FOOTPRINT PLAN 1" AND "P-2.2 TOP OF DREDGE FOOTPRINT PLAN 2" HAS BEEN DREDGED AND DISPOSED INTO CAD CELL #3.
4. ALSO SEE DRAWINGS P-2.2, P-2.3, P-2.4, P-2.5, AND P-2.6.
5. FOR DREDGE CROSS SECTIONS SEE DRAWINGS X-2.1 AND X-2.2. FOR LOCATIONS OF CROSS SECTIONS, SEE DRAWINGS P-2.5 AND P-2.6.

AREA 1		AREA 4 (CONT.)		AREA 7 (CONT.)		AREA 9 (CONT.)		AREA 12	
X=816773.7442	Y=2688088.1407	X=816694.3779	Y=2688399.2312	X=816275.7469	Y=2688485.1896	X=816288.7434	Y=2688433.9722	X=816319.2693	Y=2687429.7574
X=816888.0645	Y=2687641.1172	X=816628.1936	Y=2688427.0031	X=816282.4750	Y=2688457.5426	AREA 10		X=816245.3437	Y=2687487.7646
X=816570.3589	Y=2687559.8682	X=816676.8886	Y=2688485.4051	X=816327.8275	Y=2688468.1350	X=816285.2639	Y=2688446.6668	X=816194.9543	Y=2687513.2873
X=816564.2935	Y=2687567.573	X=816656.8168	Y=2688584.3035	X=816473.5958	Y=2688478.4339	X=816288.7434	Y=2688433.9722	X=816235.0670	Y=2687582.9300
X=816718.6368	Y=2687853.021	X=816589.7098	Y=2688573.4388	X=816568.9019	Y=2688191.7202	X=816346.4784	Y=2688423.2605	X=816197.3778	Y=2687803.0498
X=816739.9621	Y=2688037.7404	X=816576.7701	Y=2688559.4657	AREA 8		X=816484.7068	Y=2688098.3319	X=816229.9883	Y=2688261.8401
X=816764.2209	Y=2688089.0541	X=816538.1020	Y=2688552.7275	X=816282.4750	2688457.5400	X=816473.5373	Y=2687716.9369	X=816162.8146	Y=2688522.7544
AREA 2		X=816597.7420	Y=2688326.4731	X=816327.8275	Y=2688468.1350	X=816409.8311	Y=2687449.4289	X=816192.9784	Y=2688530.5202
X=816764.2209	Y=2688089.0541	X=816590.1344	Y=2688083.1296	X=816473.5958	Y=2688478.4339	X=816387.5508	Y=2687426.6966	X=816230.2207	Y=2688385.3352
X=816740.0365	Y=2688183.6216	AREA 5		X=816568.9019	Y=2688191.7202	X=816433.6500	Y=2687628.8726	X=816297.0544	Y=2688402.4275
X=816737.3331	Y=2688185.7028	X=816724.8298	Y=2688108.0709	X=816566.2663	Y=2687967.7480	X=816412.1869	Y=2687815.2495	X=816354.3658	Y=2688179.8199
X=816695.6083	Y=2687926.637	X=816590.1344	Y=2688083.1296	X=816493.3405	Y=2687642.6433	X=816446.9807	Y=2687966.5007	X=816287.1494	Y=2687769.2422
X=816659.8265	Y=2687892.8305	X=816589.8083	Y=2688072.6987	X=816445.0594	Y=2687485.3716	X=816356.2986	Y=2688310.8518	X=816394.9282	Y=2687594.9245
X=816656.3573	Y=2687804.7782	X=816559.5231	Y=2687937.6865	X=816409.8311	Y=2687449.4289	X=816297.0544	Y=2688402.4275	AREA 13	
X=816533.9658	Y=2687565.5312	X=816700.0718	Y=2687954.3507	X=816473.5399	Y=2687716.9270	X=816238.9252	Y=2688387.5613	X=816258.5030	Y=2688552.1678
X=816534.4138	Y=2687559.8197	AREA 6		X=816489.7040	Y=2687721.5676	X=816201.5514	Y=2688532.7274	X=816356.5383	Y=2688572.4633
X=816534.4138	Y=2687559.8197	X=816700.0718	Y=2687954.3507	X=816507.0269	Y=2687922.9533	AREA 11		X=816505.7240	Y=2688599.9336
X=816564.2935	Y=2687567.573	X=816695.6083	Y=2687926.6370	X=816497.5278	Y=2688105.0489	X=816297.0544	Y=2688402.4275	X=816512.3113	Y=2688569.0594
X=816718.6368	Y=2687853.021	X=816659.8265	Y=2687892.8305	X=816417.0225	Y=2688297.4863	X=816356.2986	Y=2688310.8518	X=816272.6086	Y=2688497.3791
X=816739.9621	Y=2688037.7404	X=816656.3573	Y=2687804.7782	AREA 9		X=816446.9807	Y=2687966.5007	AREA 14	
AREA 3		X=816533.9658	Y=2687565.5312	X=816285.2639	Y=2688446.6668	X=816412.1869	Y=2687815.2495	X=816551.7643	Y=2688790.4976
X=816676.8886	Y=2688485.4051	X=816445.0594	Y=2687485.3716	X=816387.5954	Y=2688441.9398	X=816433.6500	Y=2687628.8726	X=816592.6879	Y=2688679.4939
X=816671.4083	Y=2688469.4631	X=816493.3405	Y=2687642.6433	X=816416.8466	Y=2688297.9067	X=816387.5508	Y=2687426.6966	X=816575.4427	Y=2688655.0499
X=816682.2063	Y=2688410.8454	X=816559.5231	Y=2687937.6865	X=816497.5278	Y=2688105.0489	X=816359.5399	Y=2687398.1583	X=816580.0114	Y=2688628.9156
X=816694.3779	Y=2688399.2312	AREA 7		X=816507.0269	Y=2687922.9533	X=816319.2693	Y=2687429.7574	X=816533.7748	Y=2688578.7996
X=816628.1936	Y=2688427.0031	X=816566.2663	Y=2687967.7480	X=816489.7040	Y=2687721.5676	X=816394.9282	Y=2687594.9245	X=816512.3113	Y=2688569.0594
AREA 4		X=816589.8083	Y=2688072.6987	X=816473.5399	Y=2687716.9275	X=816287.1494	Y=2687769.2422	X=816272.6087	Y=2688497.3788
X=816724.8298	Y=2688108.0709	X=816597.7420	Y=2688326.4731	X=816484.7068	Y=2688098.3319	X=816354.3658	Y=2688179.8199	X=816275.7469	Y=2688485.1896
X=816737.3331	Y=2688185.7028	X=816538.1003	Y=2688552.7339	X=816346.4784	Y=2688423.2605			X=816538.0204	Y=2688552.7133

AREA 14 (CONT.)		AREA 18		AREA 19 (CONT.)		AREA 20 (CONT.)		AREA 22	
X=816576.7701	Y=2688559.4657	X=816387.7088	Y=2689912.4291	X=816396.5598	Y=2689914.0596	X=816319.3198	Y=2690085.2047	X=816255.8401	Y=2690075.3554
X=816589.7096	Y=2688573.4387	X=816419.7621	Y=2689918.3337	X=816362.8706	Y=2690095.3594	X=816332.6500	Y=2689657.8526	X=816200.9408	Y=2690374.8289
X=816617.3632	Y=2688577.7218	X=816423.5131	Y=2689897.9714	X=816319.3198	Y=2690085.2047	X=816378.6031	Y=2689447.3213	X=816032.7325	Y=2690331.9714
X=816574.8861	Y=2688814.0044	X=816405.9401	Y=2689866.4097	X=816332.6500	Y=2689657.8526	X=816421.2830	Y=2689324.0000	X=816150.0810	Y=2689695.4008
X=816548.4799	Y=2688809.2850	X=816398.2017	Y=2689836.6597	X=816378.0863	Y=2689447.2098	X=816444.6904	Y=2689222.5249	X=816258.8791	Y=2689712.6784
AREA 15		X=816431.8497	Y=2689653.9996	X=816421.2830	Y=2689324.0000	X=816458.0878	Y=2689119.3183	X=816251.9276	Y=2690001.2153
X=816632.1899	Y=2688580.0183	X=816400.139	Y=2689529.4198	X=816444.6904	Y=2689222.5249	X=816481.6140	Y=2689011.3650	X=816267.4482	Y=2690052.2815
X=816617.3632	Y=2688577.7218	X=816453.1413	Y=2689436.2051	X=816458.0878	Y=2689119.3183	X=816497.4877	Y=2688923.6410	AREA 23	
X=816574.8865	Y=2688814.0044	X=816559.8409	Y=2688885.7625	X=816481.6140	Y=2689011.3650	X=816529.0830	Y=2688818.5483	X=816150.0810	Y=2689695.4008
X=816589.7130	Y=2688816.3008	X=816579.0737	Y=2688833.8913	X=816497.4877	Y=2688923.6410	AREA 21		X=816329.0010	Y=2688722.2408
AREA 16		X=816581.9836	Y=2688815.1037	AREA 20		X=816219.4483	Y=2689706.4166	X=816423.4126	Y=2688797.2060
X=816656.8168	Y=2688584.3035	X=816548.602	Y=2688809.5683	X=816529.0830	Y=2688818.5483	X=816423.4126	Y=2688797.2060	X=816219.4483	Y=2689706.4166
X=816658.822	Y=2688587.4672	X=816546.2569	Y=2688821.7235	X=816531.2877	Y=2688806.2124	X=816329.0010	Y=2688722.2408		
X=816615.8688	Y=2688820.6403	X=816526.0265	Y=2688876.285	X=816548.6802	Y=2688809.0964	X=816356.5383	Y=2688572.4633		
X=816589.713	Y=2688816.3008	X=816419.5575	Y=2689425.5381	X=816551.7643	Y=2688790.4976	X=816505.7240	Y=2688599.9336		
X=816632.1899	Y=2688580.0183	X=816373.7548	Y=2689527.1136	X=816592.6879	Y=2688679.4939	X=816548.3108	Y=2688669.2648		
AREA 17		X=816406.271	Y=2689654.8578	X=816575.4427	Y=2688655.0499	X=816456.6735	Y=2688917.8271		
X=816615.8688	Y=2688820.6403	X=816372.6105	Y=2689837.5853	X=816580.0114	Y=2688628.9156	X=816405.4663	Y=2689207.0160		
X=816619.0435	Y=2688836.5257	AREA 19		X=816533.7748	Y=2688578.7996	X=816306.1663	Y=2689661.9534		
X=816423.5131	Y=2689897.9714	X=816529.0830	Y=2688818.5483	X=816512.3113	Y=2688569.0594	X=816293.5016	Y=2689979.2904		
X=816423.5131	Y=2689897.9714	X=816531.2877	Y=2688806.2124	X=816505.7240	Y=2688599.9336	X=816319.3198	Y=2690085.2047		
X=816405.9401	Y=2689866.4097	X=816548.6802	Y=2688809.0964	X=816548.3108	Y=2688669.2648	X=816319.3198	Y=2690085.2047		
X=816398.2017	Y=2689836.6597	X=816546.2569	Y=2688821.7235	X=816500.5075	Y=2688798.9291	X=816287.5527	Y=2690079.6342		
X=816431.8497	Y=2689653.9996	X=816526.0265	Y=2688876.2850	X=816456.6735	Y=2688917.8271	X=816267.4482	Y=2690052.2815		
X=816400.139	Y=2689529.4198	X=816472.7920	Y=2689150.9116	X=816405.4663	Y=2689207.0160	X=816251.9276	Y=2690001.2153		
X=816453.1413	Y=2689436.2051	X=816419.5575	Y=2689425.5381	X=816306.1663	Y=2689661.9534	X=816258.8791	Y=2689712.6784		
X=816559.8409	Y=2688885.7625	X=816373.7548	Y=2689527.1136	X=816306.1663	Y=2689661.9534	X=816258.8791	Y=2689712.6784		
X=816579.0737	Y=2688833.8913	X=816406.2710	Y=2689654.8578	X=816293.5016	Y=2689979.2904				
X=816581.9836	Y=2688815.1037	X=816372.6105	Y=2689837.5853	X=816315.6844	Y=2690070.2914				

APEX

ROCKVILLE, MD
SOUTH WINDSOR, CT - BOSTON, MA -
NEW BEDFORD, MA - HOLYOKE, MA

184 HIGH STREET, SUITE 502
BOSTON, MA 02210

58H CONNECTICUT AVENUE
SOUTH WINDSOR, CT

This drawing prepared by Apex for this project are instruments of Apex's service for use solely with respect to this project, and Apex shall be deemed the author of the Drawing and shall retain all common law, statutory and other reserved rights with respect thereto, including the copyright. The Documents shall not be used on other projects, for additions to this project or for completion of this project by others, except by agreement in writing and with appropriate compensation to Apex.

PROJECT
NEW BEDFORD MARINE COMMERCE TERMINAL

OWNER
MASSACHUSETTS CLEAN ENERGY CENTER
55 SUMMER STREET, 9TH FLOOR
BOSTON, MASSACHUSETTS

NO.	DATE	DESCRIPTION	BY
1.	12-23-11	FOR CONSTRUCTION	CHM

PROJECT NO.	6690
CADD FILE	B_I_DREDGE
DESIGNED BY	GCD
DRAWN BY	CWM
CHECKED BY	CHM
DATE	8/30/11
DRAWING SCALE	1"=80'

GRAPHIC SCALE
SCALE: 1"=80'
0 40 80 160

SHEET TITLE

TOP OF DREDGE FOOTPRINT PLAN 2

DRAWING NO.

P-2.2
DRAFT

NOTES:

1. MATERIAL TO BE DREDGED AS SHOWN ON CONTRACT DRAWINGS "P-2.3 INTERMEDIATE DREDGE FOOTPRINT PLAN 1" AND "P-2.4 INTERMEDIATE DREDGE FOOTPRINT PLAN 2" SHALL BE DREDGED AND USED TO CAP THE BORROW PIT CAPPING AREA, THE CAD CELL #1 CAPPING AREA AND THE WINTER FLOUNDTER MITIGATION AREA.
2. MATERIAL TO BE DREDGED AS SHOWN ON CONTRACT DRAWINGS "P-2.1 TOP OF DREDGE FOOTPRINT PLAN 1" AND "P-2.2 TOP OF DREDGE FOOTPRINT PLAN 2" SHALL BE DREDGED AND DISPOSED INTO CAD CELL #3 BEFORE MATERIAL TO BE DREDGED AS SHOWN ON CONTRACT DRAWINGS "P-2.3 INTERMEDIATE DREDGE FOOTPRINT PLAN 1" AND "P-2.4 INTERMEDIATE DREDGE FOOTPRINT PLAN 2" IS DREDGED.
3. MATERIAL TO BE DREDGED AS SHOWN ON CONTRACT DRAWINGS "P-2.3 INTERMEDIATE DREDGE FOOTPRINT PLAN 1" AND "P-2.4 INTERMEDIATE DREDGE FOOTPRINT PLAN 2" SHALL NOT BE DREDGED BEFORE MATERIAL SHOWN ON CONTRACT DRAWINGS "P-2.1 TOP OF DREDGE FOOTPRINT PLAN 1" AND "P-2.2 TOP OF DREDGE FOOTPRINT PLAN 2" HAS BEEN DREDGED AND DISPOSED INTO CAD CELL #3.
4. ALSO SEE DRAWINGS P-2.1, P-2.2, P-2.4, P-2.5, AND P-2.6.
5. FOR DREDGE CROSS-SECTIONS SEE DRAWINGS X-2.1 AND X-2.2. FOR LOCATIONS OF DREDGE CROSS-SECTIONS, SEE DRAWINGS P-2.5 AND P-2.6.

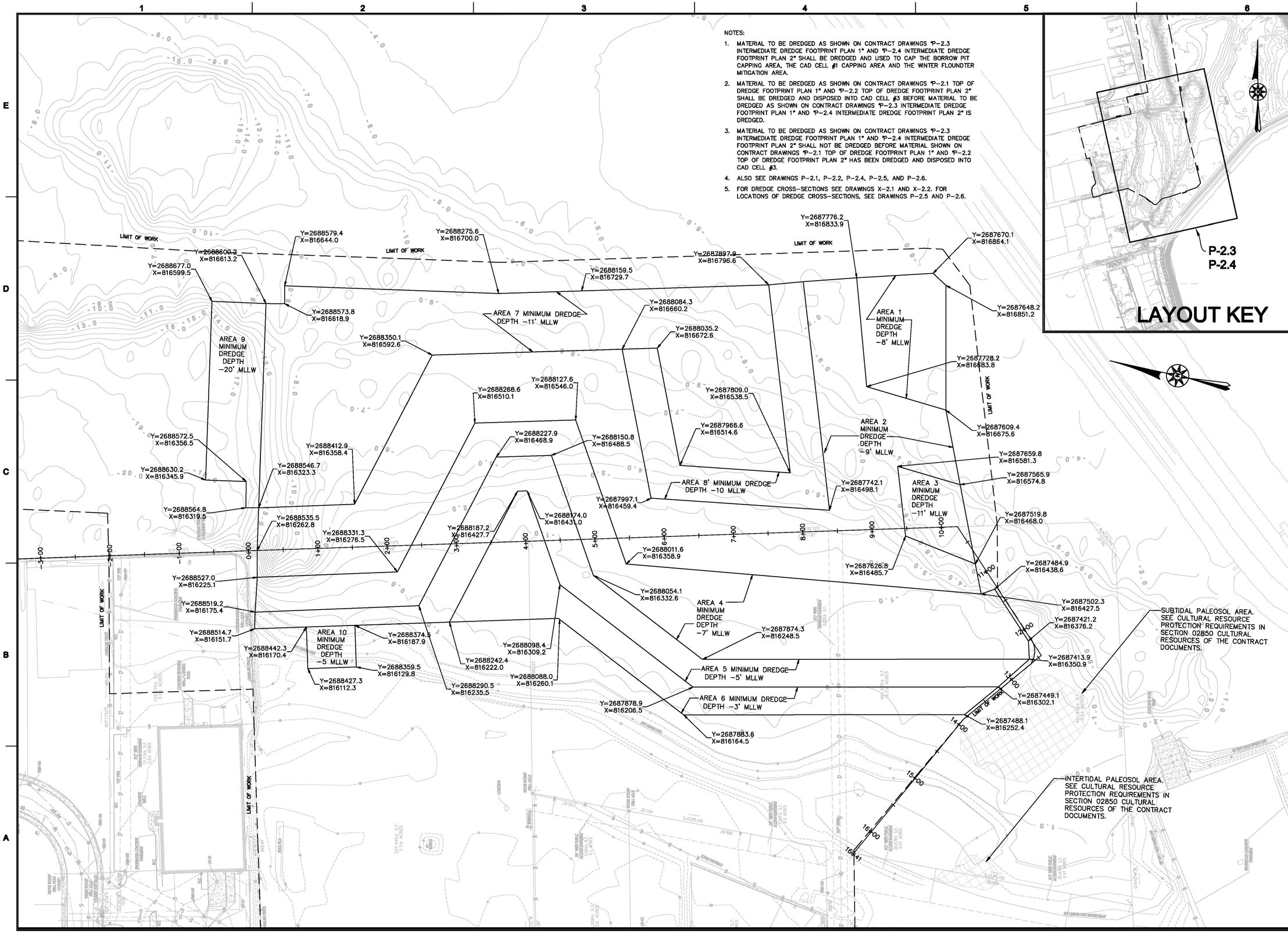

APEX

ROCKVILLE, MD
SOUTH WINDSOR, CT - BOSTON, MA - NEW BEDFORD, MA - HOLYOKE, MA

184 HIGH STREET, SUITE 502
BOSTON, MA 02210

55H CONNECTICUT AVENUE
SOUTH WINDSOR, CT

This drawings prepared by Apex for this project are instruments of Apex's service for use solely with respect to this project, and Apex shall be deemed the author of the drawing and shall retain all common law, statutory and other reserved rights with respect thereto, including the copyright. The documents shall not be used on other projects, for additions to this project or for completion of this project by others, except by agreement in writing and with appropriate compensation to Apex.

PROJECT
NEW BEDFORD MARINE COMMERCE TERMINAL

OWNER
MASSACHUSETTS CLEAN ENERGY CENTER
55 SUMMER STREET, 9TH FLOOR
BOSTON, MASSACHUSETTS

NO.	DATE	DESCRIPTION	BY

PROJECT NO.	6690
CADD FILE	B_I_DREDGE
DESIGNED BY	GCD
DRAWN BY	CWM
CHECKED BY	CHM
DATE	8/30/11
DRAWING SCALE	1"=60'

GRAPHIC SCALE
SCALE: 1"=60'
0 30 60 90 150 FFT

SHEET TITLE
INTERMEDIATE DREDGE FOOTPRINT PLAN 1

DRAWING NO.
P-2.3
DRAFT

NOTES:

1. MATERIAL TO BE DREDGED AS SHOWN ON CONTRACT DRAWINGS "P-2.3 INTERMEDIATE DREDGE FOOTPRINT PLAN 1" AND "P-2.4 INTERMEDIATE DREDGE FOOTPRINT PLAN 2" SHALL BE DREDGED AND USED TO CAP THE BORROW PIT CAPPING AREA, THE CAD CELL #1 CAPPING AREA AND THE WINTER FLOUNDTER MITIGATION AREA.
2. MATERIAL TO BE DREDGED AS SHOWN ON CONTRACT DRAWINGS "P-2.1 TOP OF DREDGE FOOTPRINT PLAN 1" AND "P-2.2 TOP OF DREDGE FOOTPRINT PLAN 2" SHALL BE DREDGED AND DISPOSED INTO CAD CELL #3 BEFORE MATERIAL TO BE DREDGED AS SHOWN ON CONTRACT DRAWINGS "P-2.3 INTERMEDIATE DREDGE FOOTPRINT PLAN 1" AND "P-2.4 INTERMEDIATE DREDGE FOOTPRINT PLAN 2" IS DREDGED.
3. MATERIAL TO BE DREDGED AS SHOWN ON CONTRACT DRAWINGS "P-2.3 INTERMEDIATE DREDGE FOOTPRINT PLAN 1" AND "P-2.4 INTERMEDIATE DREDGE FOOTPRINT PLAN 2" SHALL NOT BE DREDGED BEFORE MATERIAL SHOWN ON CONTRACT DRAWINGS "P-2.1 TOP OF DREDGE FOOTPRINT PLAN 1" AND "P-2.2 TOP OF DREDGE FOOTPRINT PLAN 2" HAS BEEN DREDGED AND DISPOSED INTO CAD CELL #3.
4. ALSO SEE DRAWINGS P-2.1, P-2.2, P-2.4, P-2.5 AND P-2.6.
5. FOR DREDGE CROSS-SECTIONS, SEE DRAWINGS X-2.1 AND X-2.2. FOR LOCATIONS OF DREDGE CROSS-SECTIONS, SEE DRAWINGS P-2.5 AND P-2.6.

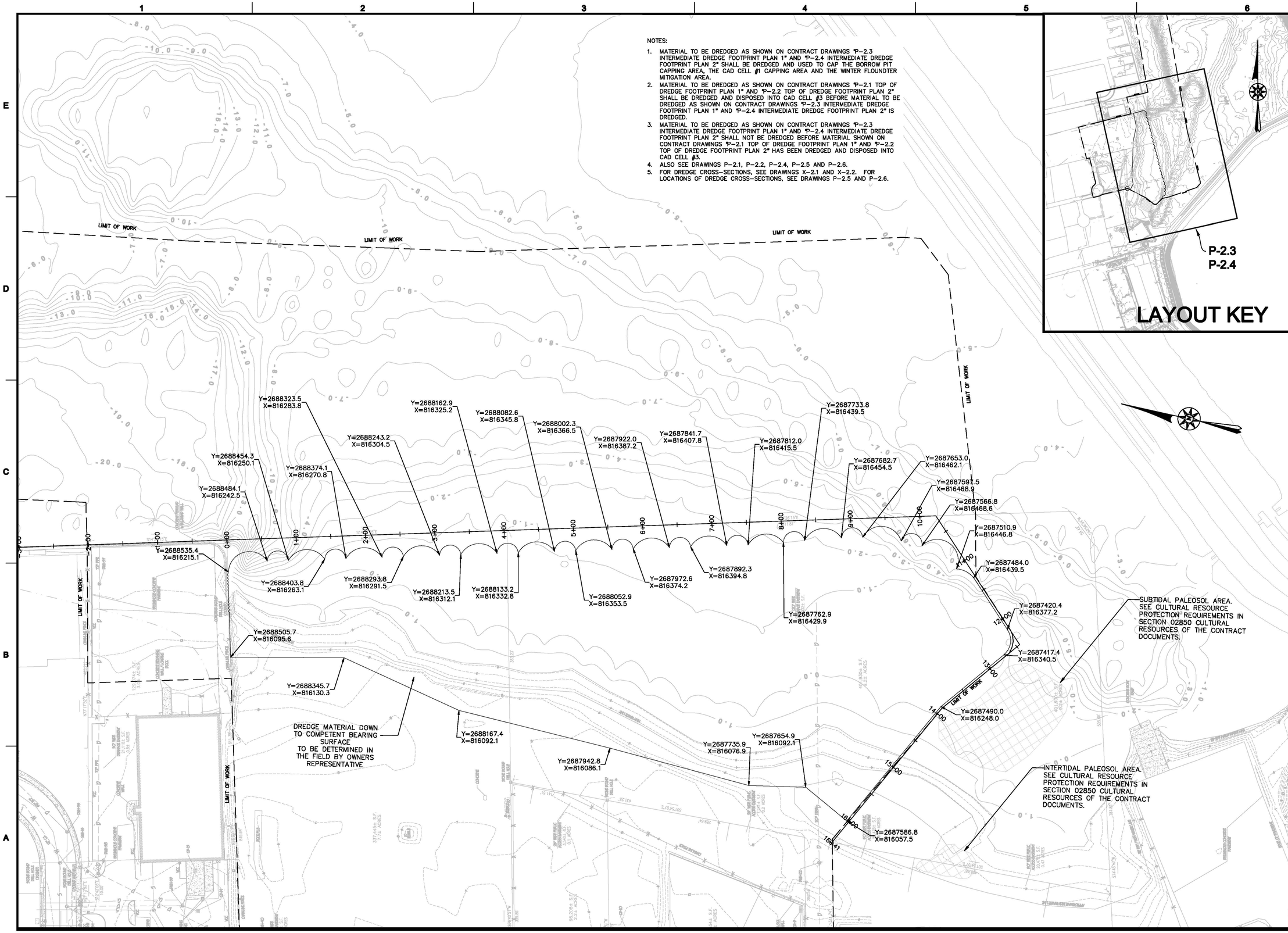

APEX

ROCKVILLE, MD
SOUTH WINDSOR, CT - BOSTON, MA - NEW BEDFORD, MA - HOLYOKE, MA

184 HIGH STREET, SUITE 502
BOSTON, MA 02210

55H CONNECTICUT AVENUE
SOUTH WINDSOR, CT

This drawings prepared by Apex for this project are instruments of Apex's service for use solely with respect to this project, and Apex shall be deemed the author of the drawing and shall retain all common law, statutory and other reserved rights with respect thereto, including the copyright. The documents shall not be used on other projects, for additions to this project or for completion of this project by others, except by agreement in writing and with appropriate compensation to Apex.

PROJECT
NEW BEDFORD MARINE COMMERCE TERMINAL

OWNER
MASSACHUSETTS CLEAN ENERGY CENTER
55 SUMMER STREET, 9TH FLOOR
BOSTON, MASSACHUSETTS

NO.	DATE	DESCRIPTION	BY

PROJECT NO.	6690
CADD FILE	B_I_DREDGE
DESIGNED BY	GCD
DRAWN BY	CWM
CHECKED BY	CHM
DATE	8/30/11
DRAWING SCALE	1"=60'

GRAPHIC SCALE
SCALE: 1"=60'
0 30 60 90 150

SHEET TITLE
INTERMEDIATE DREDGE FOOTPRINT PLAN 2

DRAWING NO.
P-2.4
DRAFT

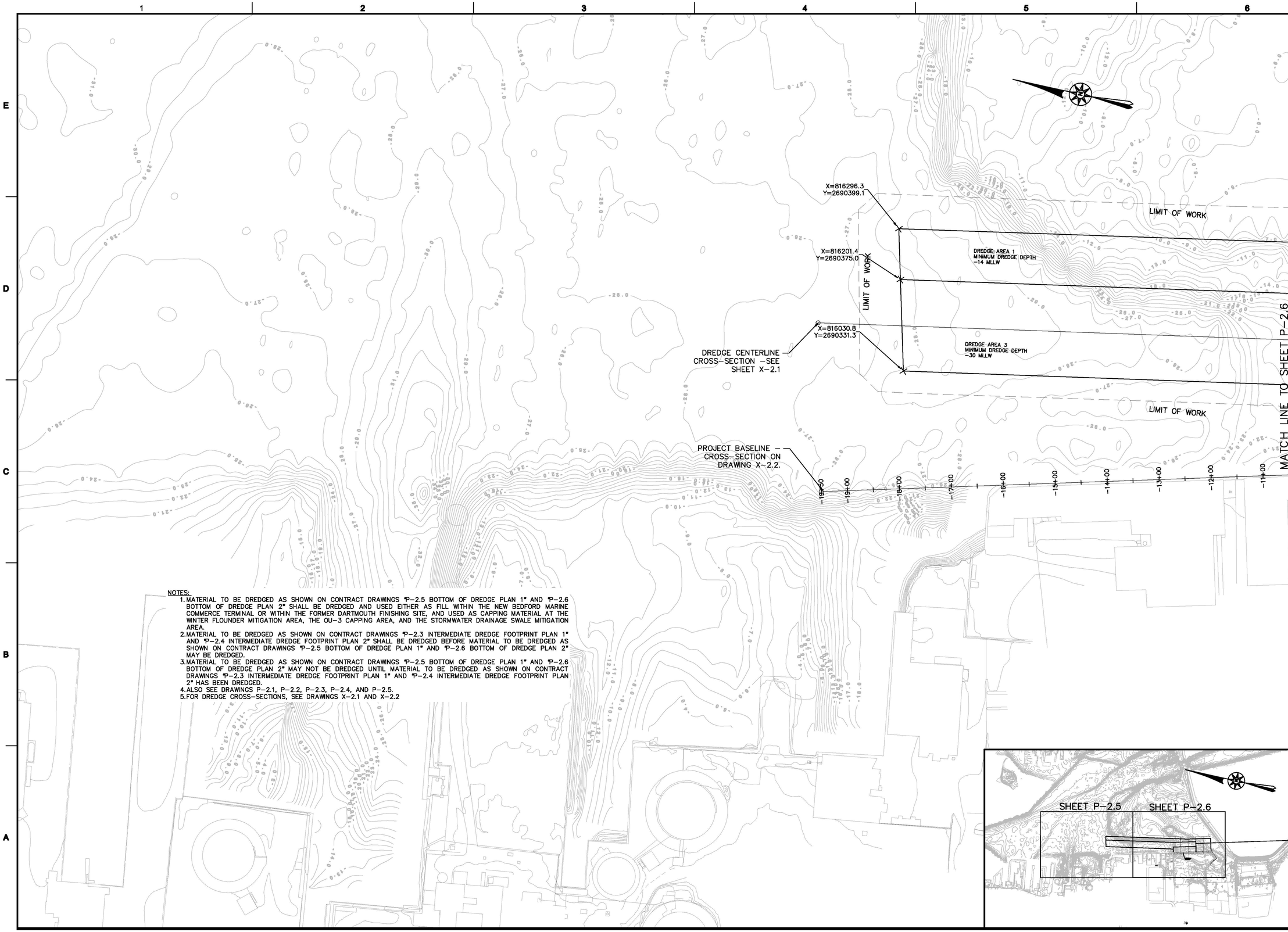

NOTES:

1. MATERIAL TO BE DREDGED AS SHOWN ON CONTRACT DRAWINGS "P-2.5 BOTTOM OF DREDGE PLAN 1" AND "P-2.6 BOTTOM OF DREDGE PLAN 2" SHALL BE DREDGED AND USED EITHER AS FILL WITHIN THE NEW BEDFORD MARINE COMMERCE TERMINAL OR WITHIN THE FORMER DARTMOUTH FINISHING SITE, AND USED AS CAPPING MATERIAL AT THE WINTER FLOUNDER MITIGATION AREA, THE OU-3 CAPPING AREA, AND THE STORMWATER DRAINAGE SWALE MITIGATION AREA.
2. MATERIAL TO BE DREDGED AS SHOWN ON CONTRACT DRAWINGS "P-2.3 INTERMEDIATE DREDGE FOOTPRINT PLAN 1" AND "P-2.4 INTERMEDIATE DREDGE FOOTPRINT PLAN 2" SHALL BE DREDGED BEFORE MATERIAL TO BE DREDGED AS SHOWN ON CONTRACT DRAWINGS "P-2.5 BOTTOM OF DREDGE PLAN 1" AND "P-2.6 BOTTOM OF DREDGE PLAN 2" MAY BE DREDGED.
3. MATERIAL TO BE DREDGED AS SHOWN ON CONTRACT DRAWINGS "P-2.5 BOTTOM OF DREDGE PLAN 1" AND "P-2.6 BOTTOM OF DREDGE PLAN 2" MAY NOT BE DREDGED UNTIL MATERIAL TO BE DREDGED AS SHOWN ON CONTRACT DRAWINGS "P-2.3 INTERMEDIATE DREDGE FOOTPRINT PLAN 1" AND "P-2.4 INTERMEDIATE DREDGE FOOTPRINT PLAN 2" HAS BEEN DREDGED.
4. ALSO SEE DRAWINGS P-2.1, P-2.2, P-2.3, P-2.4, AND P-2.5.
5. FOR DREDGE CROSS-SECTIONS, SEE DRAWINGS X-2.1 AND X-2.2

APEX

ROCKVILLE, MD
SOUTH WINDSOR, CT - BOSTON, MA -
NEW BEDFORD, MA - HOLYOKE, MA

184 HIGH STREET, SUITE 502
BOSTON, MA 02210

55H CONNECTICUT AVENUE
SOUTH WINDSOR, CT

This drawings prepared by Apex for this project are instruments of Apex's service for use solely with respect to this project, and Apex shall be deemed the author of the Drawing and shall retain all common law, statutory and other reserved rights with respect thereto, including the copyright. The Documents shall not be used on other projects, for additions to this project or for completion of this project by others, except by agreement in writing and with appropriate compensation to Apex.

PROJECT
NEW BEDFORD
MARINE COMMERCE
TERMINAL

OWNER
MASSACHUSETTS CLEAN ENERGY COUNCIL
55 SUMMER STREET, 9TH FLOOR
BOSTON, MASSACHUSETTS

NO.	DATE	DESCRIPTION	BY

PROJECT NO.	6690
CADD FILE	P_B_DREDGE_P9_10
DESIGNED BY	GCD
DRAWN BY	CWM
CHECKED BY	CHM
DATE	8/30/11
DRAWING SCALE	1"=80'

GRAPHIC SCALE
SCALE: 1"=80'
0 40 80 160

SHEET TITLE
BOTTOM OF
DREDGE
PLAN 1

DRAWING NO.
P-2.5
DRAFT

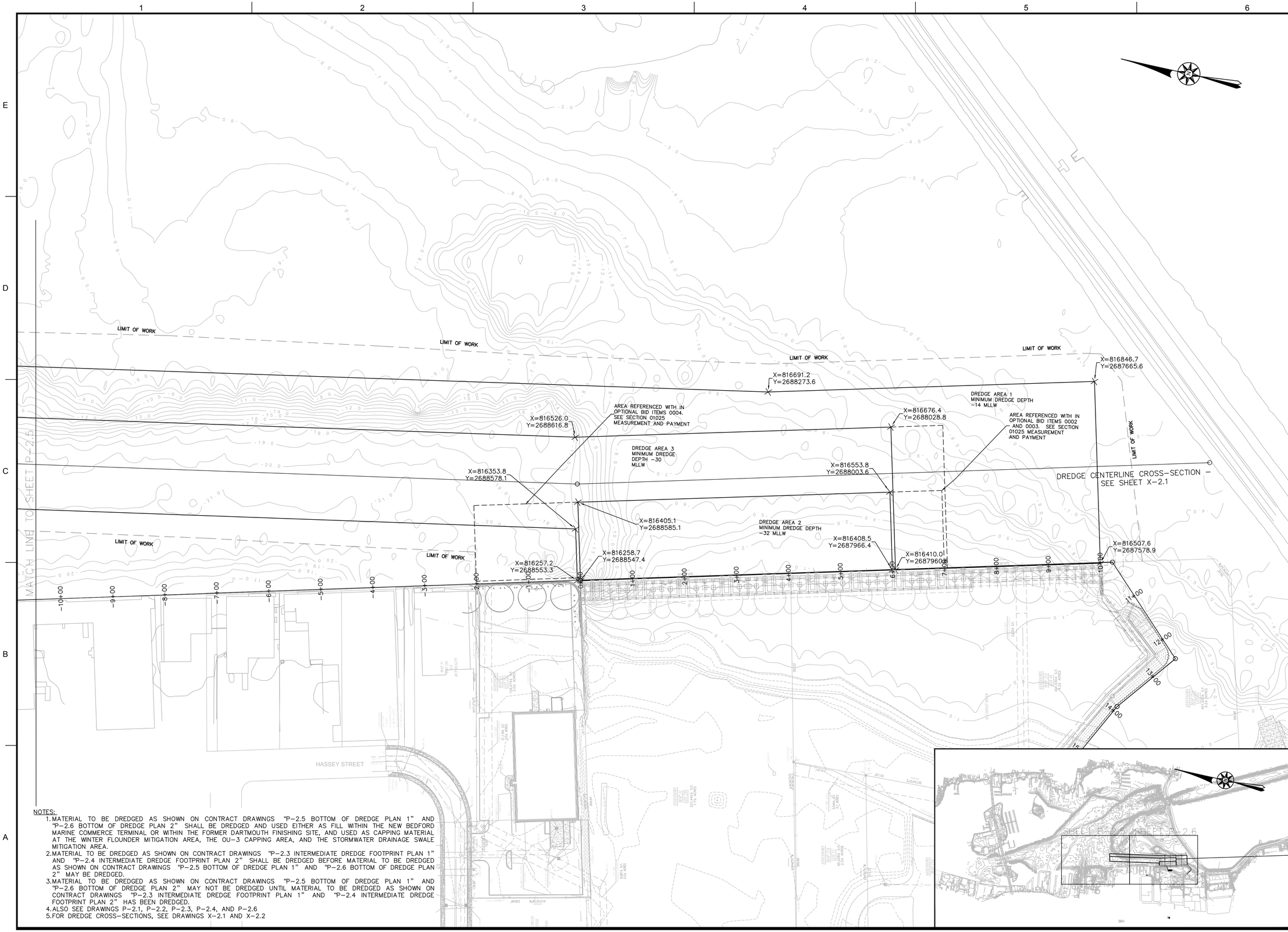

NOTES:

1. MATERIAL TO BE DREDGED AS SHOWN ON CONTRACT DRAWINGS "P-2.5 BOTTOM OF DREDGE PLAN 1" AND "P-2.6 BOTTOM OF DREDGE PLAN 2" SHALL BE DREDGED AND USED EITHER AS FILL WITHIN THE NEW BEDFORD MARINE COMMERCE TERMINAL OR WITHIN THE FORMER DARTMOUTH FINISHING SITE, AND USED AS CAPPING MATERIAL AT THE WINTER FLOUNDER MITIGATION AREA, THE OU-3 CAPPING AREA, AND THE STORMWATER DRAINAGE SWALE MITIGATION AREA.
2. MATERIAL TO BE DREDGED AS SHOWN ON CONTRACT DRAWINGS "P-2.3 INTERMEDIATE DREDGE FOOTPRINT PLAN 1" AND "P-2.4 INTERMEDIATE DREDGE FOOTPRINT PLAN 2" SHALL BE DREDGED BEFORE MATERIAL TO BE DREDGED AS SHOWN ON CONTRACT DRAWINGS "P-2.5 BOTTOM OF DREDGE PLAN 1" AND "P-2.6 BOTTOM OF DREDGE PLAN 2" MAY BE DREDGED.
3. MATERIAL TO BE DREDGED AS SHOWN ON CONTRACT DRAWINGS "P-2.5 BOTTOM OF DREDGE PLAN 1" AND "P-2.6 BOTTOM OF DREDGE PLAN 2" MAY NOT BE DREDGED UNTIL MATERIAL TO BE DREDGED AS SHOWN ON CONTRACT DRAWINGS "P-2.3 INTERMEDIATE DREDGE FOOTPRINT PLAN 1" AND "P-2.4 INTERMEDIATE DREDGE FOOTPRINT PLAN 2" HAS BEEN DREDGED.
4. ALSO SEE DRAWINGS P-2.1, P-2.2, P-2.3, P-2.4, AND P-2.6
5. FOR DREDGE CROSS-SECTIONS, SEE DRAWINGS X-2.1 AND X-2.2

APEX

ROCKVILLE, MD
SOUTH WINDSOR, CT - BOSTON, MA - NEW BEDFORD, MA - HOLYOKE, MA

184 HIGH STREET, SUITE 502
BOSTON, MA 02210

58H CONNECTICUT AVENUE
SOUTH WINDSOR, CT

This drawings prepared by Apex for this project are instruments of Apex's service for use solely with respect to this project, and Apex shall be deemed the author of the Drawing and shall retain all common law, statutory and other reserved rights with respect thereto, including the copyright. The Documents shall not be used on other projects, for additions to this project or for completion of this project by others, except by agreement in writing and with appropriate compensation to Apex.

PROJECT
NEW BEDFORD MARINE COMMERCE TERMINAL

OWNER
MASSACHUSETTS CLEAN ENERGY COUNCIL
55 SUMMER STREET, 9TH FLOOR
BOSTON, MASSACHUSETTS

NO.	DATE	DESCRIPTION	BY

PROJECT NO.	6690
CADD FILE	B_I_DREDGE
DESIGNED BY	GCD
DRAWN BY	CWM
CHECKED BY	CHM
DATE	8/30/11
DRAWING SCALE	1"=80'

GRAPHIC SCALE
SCALE: 1"=80'
0 40 80 160

SHEET TITLE
BOTTOM OF DREDGE PLAN 2

DRAWING NO.
P-2.6

P:\Jobs\6690 NBH_ Phase IV\PLANS\FINAL_PLANS\100% Submittal\P-2.5-P-2.6_BOTTOM_DREDGE.dwg

NOTES:
1. MATERIAL TO BE DREDGED AS SHOWN ON THE CONTRACT DRAWING "P-2.7 GIFFORD STREET CHANNEL DREDGE" SHALL BE DISPOSED WITHIN CAD CELL #3 AS SHOWN ON THE CONTRACT DRAWING "P-3.4 CAD CELL #3 DISPOSAL PLAN".
2. CROSS SECTIONS ARE DEPICTED ON SHEET X-2.3.

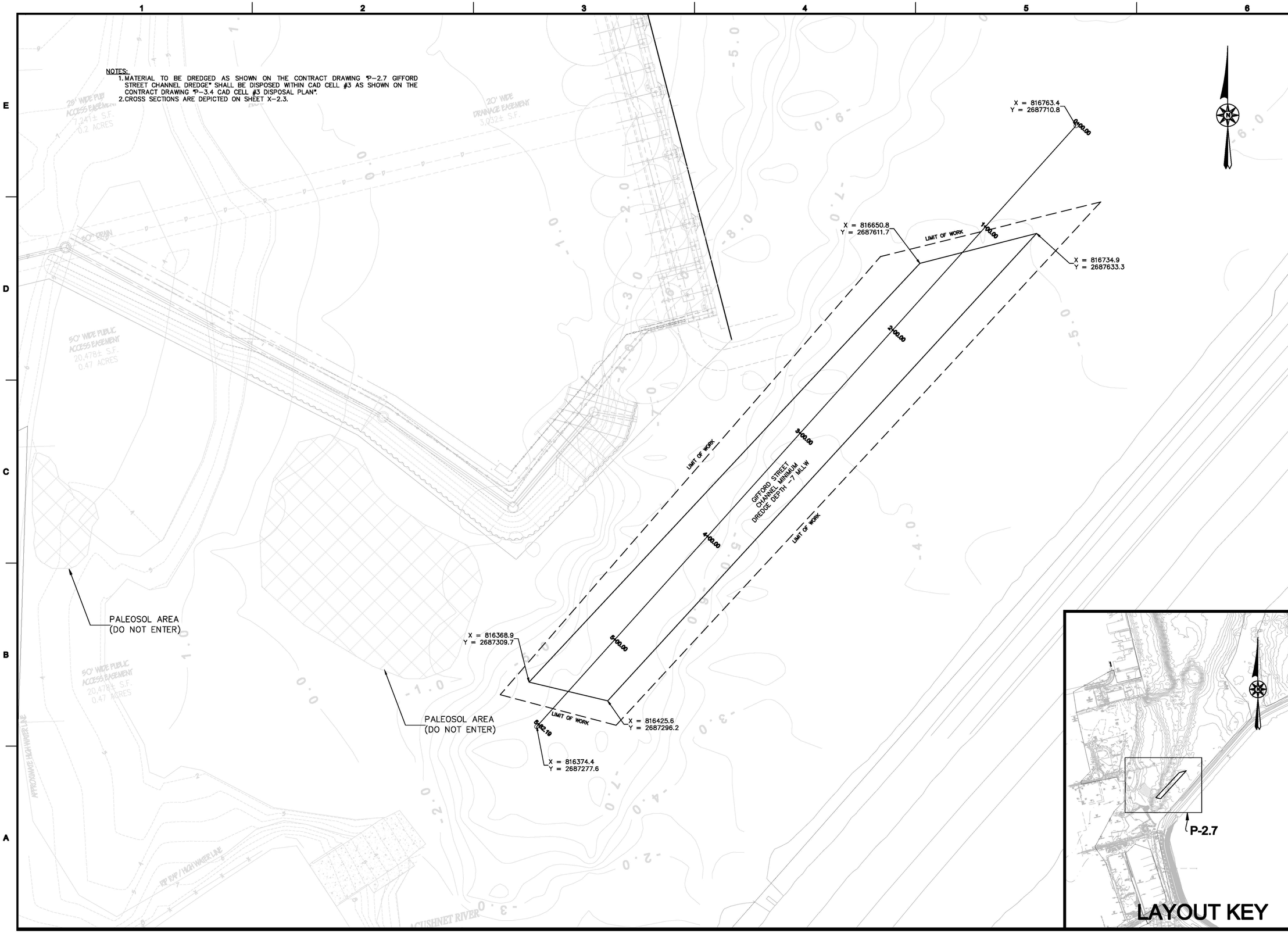

APEX

ROCKVILLE, MD
SOUTH WINDSOR, CT - BOSTON, MA - NEW BEDFORD, MA - HOLYOKE, MA

184 HIGH STREET, SUITE 502
BOSTON, MA 02210

55H CONNECTICUT AVENUE
SOUTH WINDSOR, CT

This drawings prepared by Apex for this project are instruments of Apex's service for use solely with respect to this project, and Apex shall be deemed the author of the drawing and shall retain all common law, statutory and other reserved rights with respect thereto, including the copyright. The documents shall not be used on other projects, for additions to this project or for completion of this project by others, except by agreement in writing and with appropriate compensation to Apex.

PROJECT
NEW BEDFORD MARINE COMMERCE TERMINAL

OWNER
MASSACHUSETTS CLEAN ENERGY CENTER
55 SUMMER STREET, 9TH FLOOR
BOSTON, MA

NO.	DATE	DESCRIPTION	BY
1.	12-23-11	FOR CONSTRUCTION	CHM

PROJECT NO.	6690
CADD FILE	GIFFORD_ST
DESIGNED BY	CWM
DRAWN BY	CWM
CHECKED BY	CHM
DATE	8-30-11
DRAWING SCALE	1"=30'

GRAPHIC SCALE
SCALE: 1"=30'
0 15 30 60

SHEET TITLE
GIFFORD STREET CHANNEL DREDGE

DRAWING NO.
P-2.7
DRAFT

NOTES:

1. MATERIAL TO BE DREDGED AS SHOWN ON THE CONTRACT DRAWINGS P–2.8 MOORING MITIGATION AREA PLAN" SHALL BE DISPOSED WITHIN CAD CELL #3 AS SHOWN ON THE CONTRACT DRAWING P–3.4 CAD CELL #3 DISPOSAL PLAN.
2. MOORING MITIGATION CROSS SECTIONS ARE DEPICTED ON SHEET X–2.4.

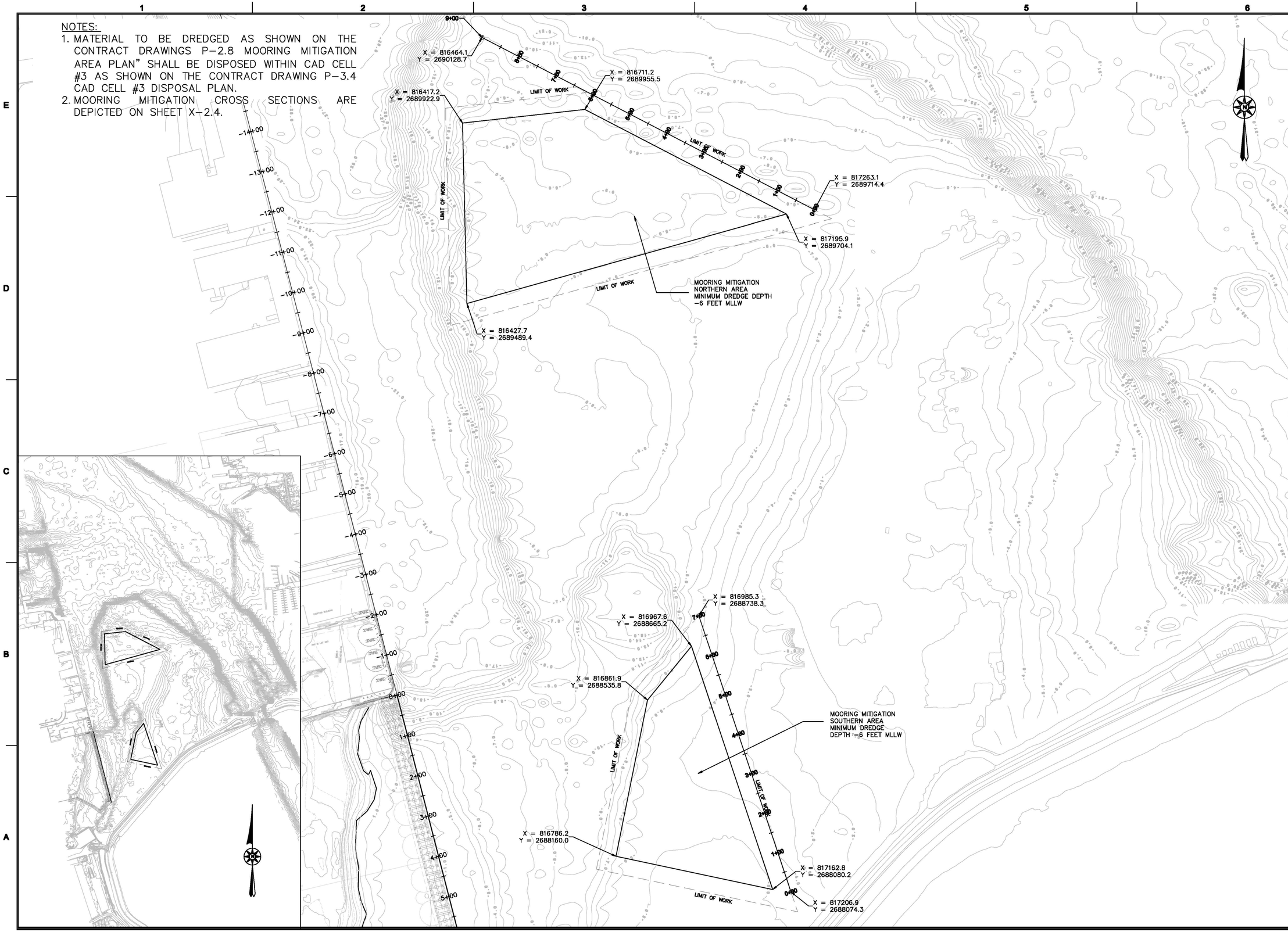

APEX

ROCKVILLE, MD
SOUTH WINDSOR, CT - BOSTON, MA -
NEW BEDFORD, MA - HOLYOKE, MA

184 HIGH STREET, SUITE 502
BOSTON, MA 02210

55H CONNECTICUT AVENUE
SOUTH WINDSOR, CT

[redacted]

PROJECT

NEW BEDFORD
MARINE COMMERCE
TERMINAL

OWNER

MASSACHUSETTS CLEAN ENERGY CENTER
55 SUMMER STREET, 9TH FLOOR
BOSTON, MA

NO.	DATE	DESCRIPTION	BY
1.	12–23–11	FOR CONSTRUCTION	CHM

PROJECT NO.	6690
CADD FILE	MOORING_MIT
DESIGNED BY	CWM
DRAWN BY	CWM
CHECKED BY	CHM
DATE	8-26-11
DRAWING SCALE	1"=100'

GRAPHIC SCALE

SCALE: 1"=100'

0 50 100 200

SHEET TITLE

MOORING
MITIGATION
AREA PLAN

DRAWING NO.

P-2.8
DRAFT

NOTES:
1. PHOTOVOLTAIC CELLS TO BE MOUNTED AND CONNECTED TO DAY BOARD PER MANUFACTURES SPECIFICATIONS.
2. FOUR (4) 1/2 INCH HOT DIPPED GALVANIZED THROUGH BOLTS TO BE USED TO SECURE DAY BOARD TO CONCRETE FILLED STEEL PILE.
3. RADIO CONTROLLED PHOTOVOLTAIC CELL AND LED TO BE ADDED TO THE TOP OF EACH NUN.
4. NUNS SHALL BE PAINTED RED, CANS SHALL BE PAINTED ORANGE, EXCEPT FOR CAN AT 6+00, WHICH SHALL BE PAINTED YELLOW.
5. BOLLARD AT 6+00 TO BE PAINTED YELLOW.
6. CONTRACTOR SHALL PROVIDE SIGN WHICH STATES "CAUTION: DRAFT SHALLOWS SOUTH OF THIS POINT". SEE SECTION 02500 FOR SIGN SPECIFICATIONS, SIGN SHALL BE LOCATED BETWEEN PILE LINES 38 AND 39, ATTACHED TO EASTERN FACE OF BULKHEAD, WITH TOP 6" BELOW EDGE OF UTILITY TRENCH.
7. CONDITION AND LOCATION OF ALL AIDS TO NAVIGATION (NUNS, CANS, PAINTED BOLLARD, DAY BOARDS AND SIGN) TO BE INSPECTED TWICE PER YEAR AND SHALL ALSO BE INSPECTED IF ANY AIDS APPEAR TO BE OUT OF ALIGNMENT, DAMAGED, OR MISSING. SHOULD AN AIDS TO NAVIGATION BE NOTED TO BE OUT OF LOCATION, THEY SHALL BE RELOCATED TO THEIR CORRECT LOCATION. SHOULD AN AID TO NAVIGATION BE MISSING, IT SHALL BE REPLACED. SHOULD AN AID BE DAMAGED, INCLUDING IF PAINT IS FADING OR SEPARATING FROM ANY AID TO NAVIGATION, THE AID SHALL BE REPAINTED OR REPAIRED IMMEDIATELY.

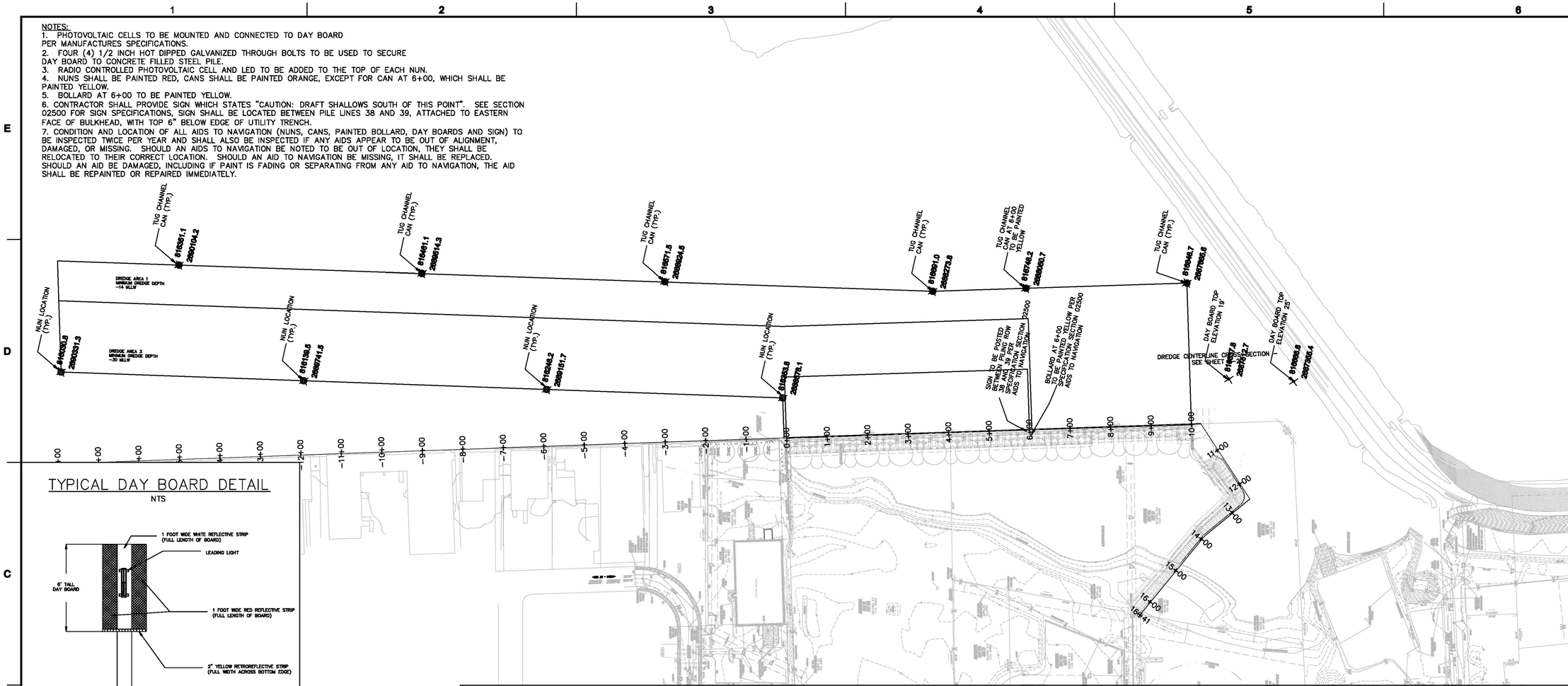

TYPICAL DAY BOARD DETAIL
NTS

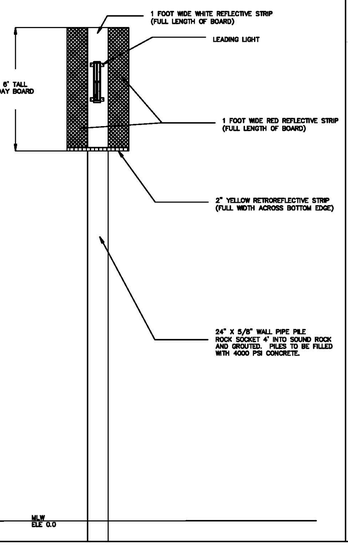

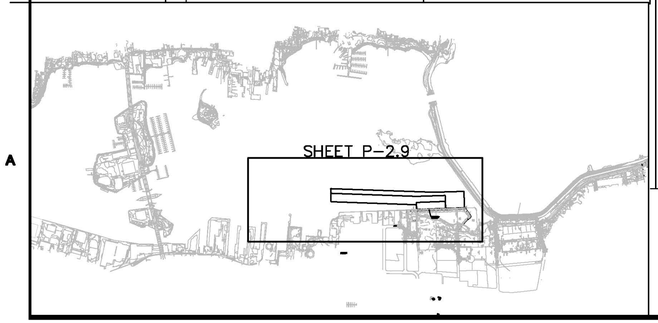

TYPICAL TUG CHANNEL CAN DETAIL
NTS

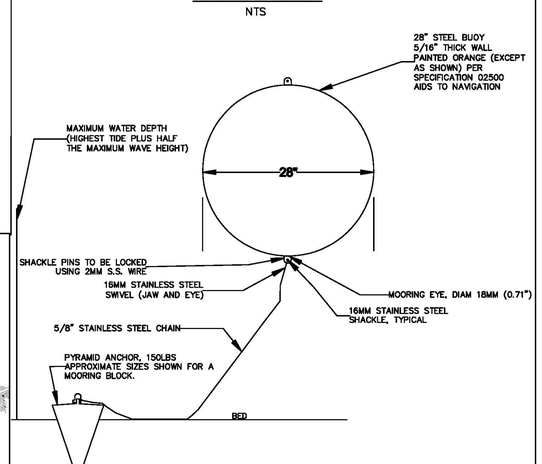

TYPICAL NUN DETAIL
NTS

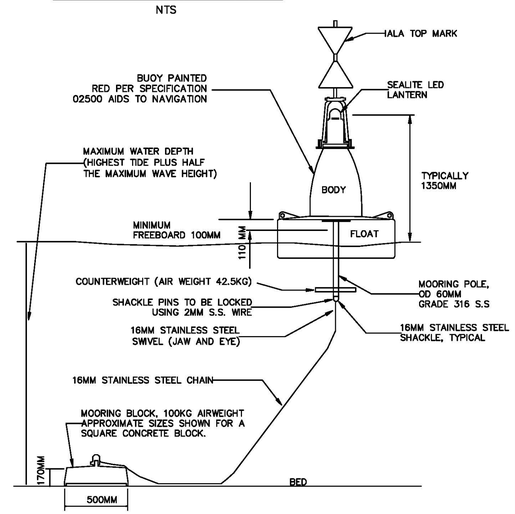

LEADING LIGHT DETAIL
NTS

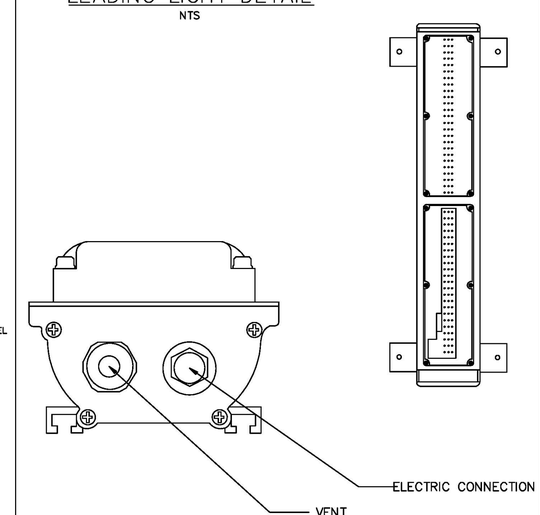

APEX

ROCKVILLE, MD
SOUTH WINDSOR, CT - BOSTON, MA - NEW BEDFORD, MA - HOLYOKE, MA

184 HIGH STREET, SUITE 502
BOSTON, MA 02210

55H CONNECTICUT AVENUE
SOUTH WINDSOR, CT

This drawings prepared by Apex for this project are instruments of Apex's service for use solely with respect to this project, and Apex shall be deemed the author of the Drawing and shall retain all common law, statutory and other reserved rights with respect thereto, including the copyright. The Documents shall not be used on other projects, for additions to this project or for completion of this project by others, except by agreement in writing and with appropriate compensation to Apex.

PROJECT
NEW BEDFORD MARINE COMMERCE TERMINAL

OWNER
MASSACHUSETTS CLEAN ENERGY COUNCIL
55 SUMMER STREET, 9TH FLOOR
BOSTON, MASSACHUSETTS

NO.	DATE	DESCRIPTION	BY
1.	12-23-11	FOR CONSTRUCTION	CHM

PROJECT NO.	6690
CADD FILE	B_I_DREDGE
DESIGNED BY	GCD
DRAWN BY	CWM
CHECKED BY	CHM
DATE	8/30/11
DRAWING SCALE	1"=125'

GRAPHIC SCALE
SCALE: 1"=125'
0 125 250

SHEET TITLE
NAVIGATIONAL AIDS

DRAWING NO.
P-2.9
DRAFT

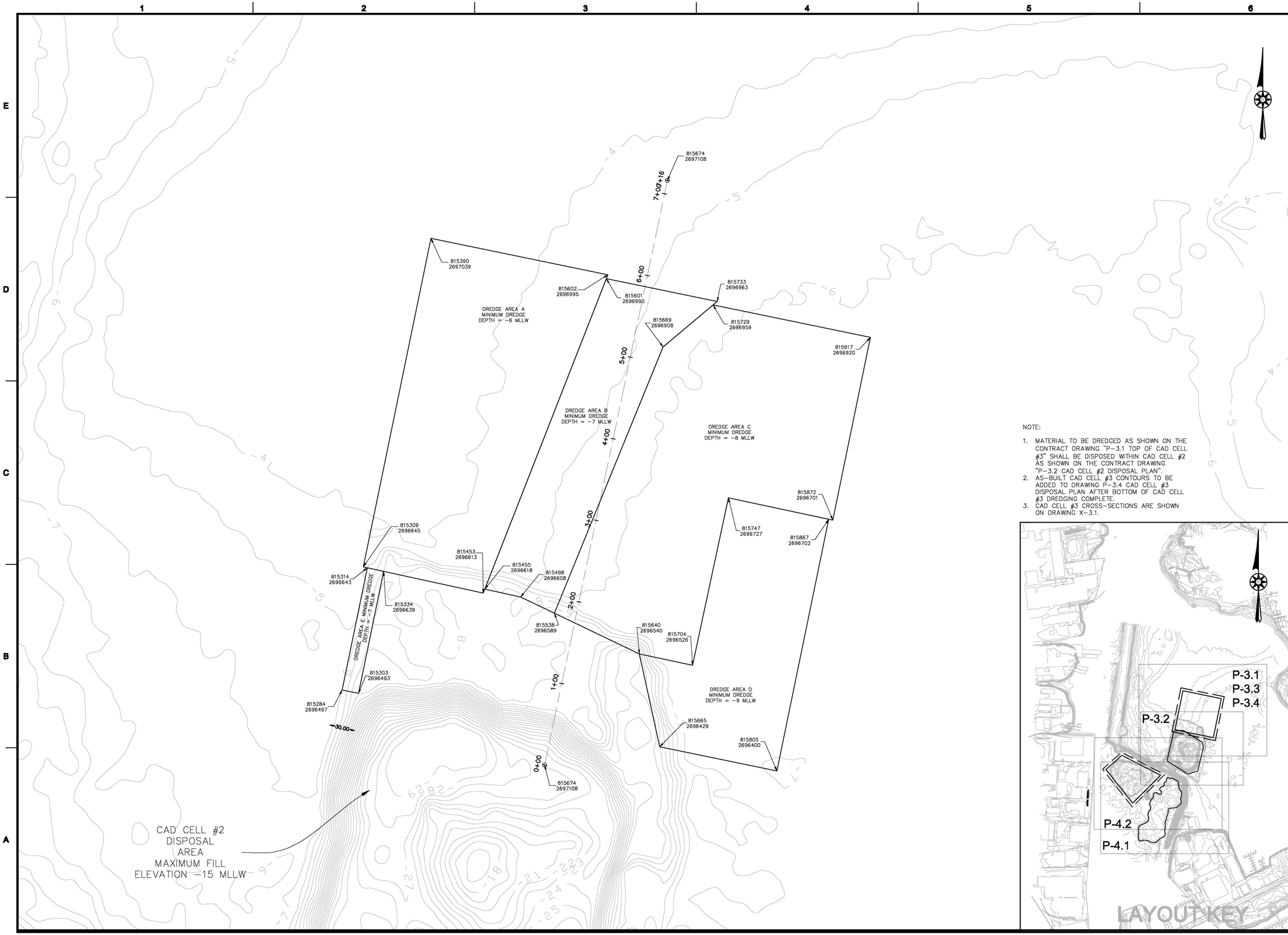

NOTE:

1. MATERIAL TO BE DREDGED AS SHOWN ON THE CONTRACT DRAWING "P-3.1 TOP OF CAD CELL #3" SHALL BE DISPOSED WITHIN CAD CELL #2 AS SHOWN ON THE CONTRACT DRAWING "P-3.2 CAD CELL #2 DISPOSAL PLAN".
2. AS-BUILT CAD CELL #3 CONTOURS TO BE ADDED TO DRAWING P-3.4 CAD CELL #3 DISPOSAL PLAN AFTER BOTTOM OF CAD CELL #3 DREDGING COMPLETE.
3. CAD CELL #3 CROSS-SECTIONS ARE SHOWN ON DRAWING X-3.1.

APEX

ROCKVILLE, MD
SOUTH WINDSOR, CT - BOSTON, MA -
NEW BEDFORD, MA - HOLYOKE, MA

184 HIGH STREET, SUITE 502
BOSTON, MA 02210

55H CONNECTICUT AVENUE
SOUTH WINDSOR, CT

This drawings prepared by Apex for this project are instruments of Apex's service for use solely with respect to this project, and Apex shall be deemed the author of the Drawing and shall retain all common law, statutory and other reserved rights with respect thereto, including the copyright. The Documents shall not be used on other projects, for additions to this project or for completion of this project by others, except by agreement in writing and with appropriate compensation to Apex.

PROJECT

NEW BEDFORD MARINE COMMERCE TERMINAL

OWNER

MASSACHUSETTS CLEAN ENERGY CENTER
55 SUMMER STREET, 9TH FLOOR
BOSTON, MASSACHUSETTS

NO.	DATE	DESCRIPTION	BY
1.	12-23-11	FOR CONSTRUCTION	CHM

PROJECT NO.	6690
CADD FILE	P-3.1-P-3.4_P-4.1-P-4.
DESIGNED BY	GCD
DRAWN BY	GCD
CHECKED BY	CMM
DATE	08/04/2011
DRAWING SCALE	1"=50'

GRAPHIC SCALE

SCALE: 1"=50'

0 25 50 75 125 FEET

SHEET TITLE

TOP OF CAD #3

DRAWING NO.

P-3.1

DRAFT

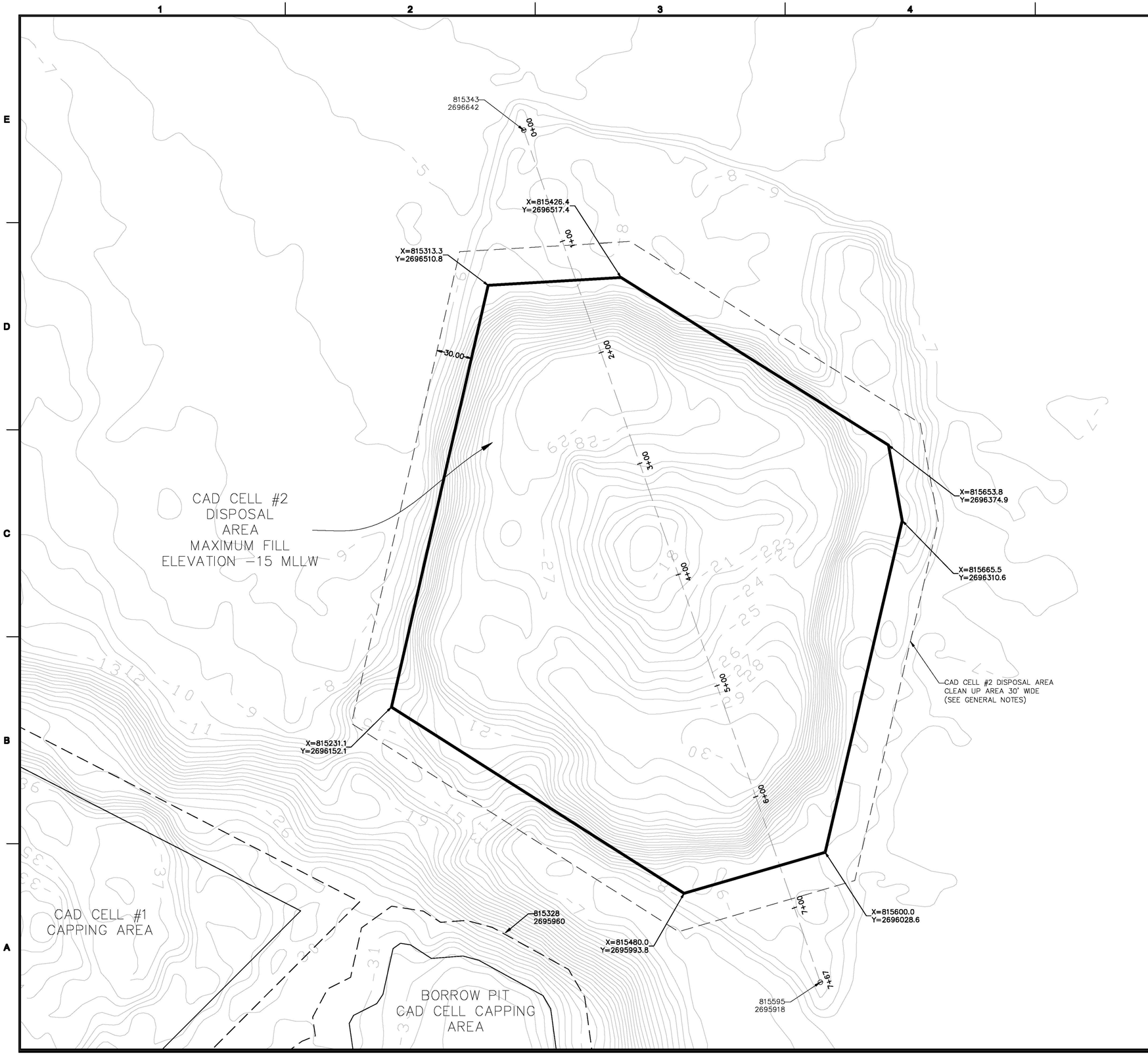

NOTE:

1. CAD CELL #2 DISPOSAL PLAN CROSS-SECTIONS ARE SHOWN ON DRAWING X-4.1.

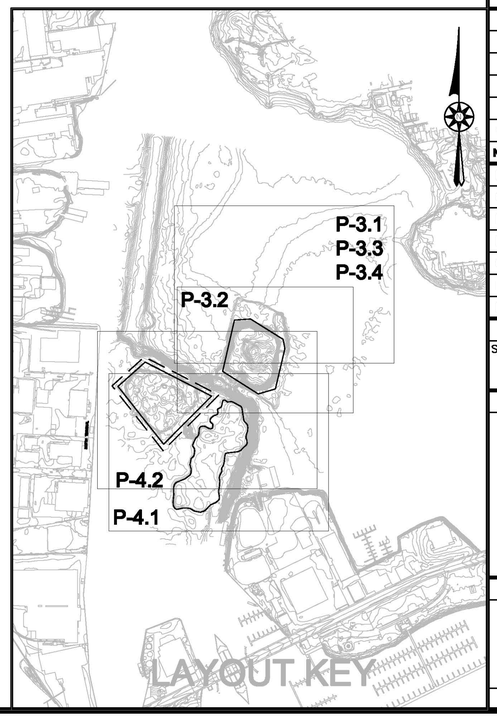

APEX

ROCKVILLE, MD
SOUTH WINDSOR, CT - BOSTON, MA -
NEW BEDFORD, MA - HOLYOKE, MA

184 HIGH STREET, SUITE 502
BOSTON, MA 02210

55H CONNECTICUT AVENUE
SOUTH WINDSOR, CT

This drawings prepared by Apex for this project are instruments of Apex's service for use solely with respect to this project, and Apex shall be deemed the author of the Drawing and shall retain all common law, statutory and other reserved rights with respect thereto, including the copyright. The Documents shall not be used on other projects, for additions to this project or for completion of this project by others, except by agreement in writing and with appropriate compensation to Apex.

PROJECT

NEW BEDFORD MARINE COMMERCE TERMINAL

OWNER

MASSACHUSETTS CLEAN ENERGY CENTER
55 SUMMER STREET, 9TH FLOOR
BOSTON, MASSACHUSETTS

NO.	DATE	DESCRIPTION	BY
1.	12-23-11	FOR CONSTRUCTION	CHM

PROJECT NO.	6690
CADD FILE	P-12-P16_P28_X-4 PR
DESIGNED BY	GCD
DRAWN BY	GCD
CHECKED BY	CMM
DATE	08/25/2011
DRAWING SCALE	1"=40'

GRAPHIC SCALE

SCALE: 1"=40'

0 20 40 80 160 FEET

SHEET TITLE

CAD CELL #2 DISPOSAL PLAN

DRAWING NO.

P-3.2

DRAFT

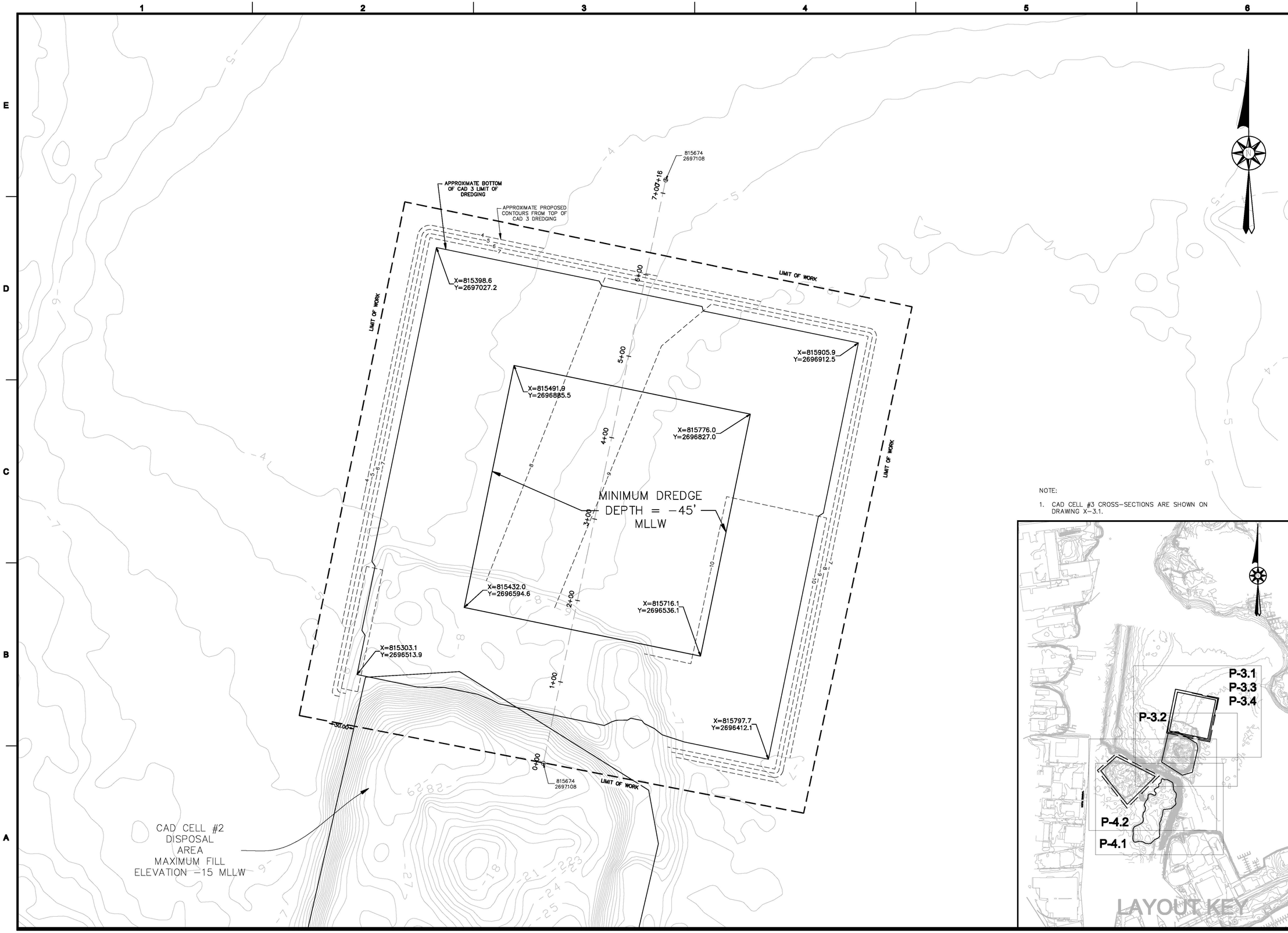

NOTE:

1. CAD CELL #3 CROSS-SECTIONS ARE SHOWN ON DRAWING X-3.1.

APEX

ROCKVILLE, MD
SOUTH WINDSOR, CT - BOSTON, MA - NEW BEDFORD, MA - HOLYOKE, MA

184 HIGH STREET, SUITE 502
BOSTON, MA 02210

55H CONNECTICUT AVENUE
SOUTH WINDSOR, CT

This drawings prepared by Apex for this project are instruments of Apex's service for use solely with respect to this project, and Apex shall be deemed the author of the Drawing and shall retain all common law, statutory and other reserved rights with respect thereto including the copyright. The Documents shall not be used on other projects, for additions to this project or for completion of this project by others, except by agreement in writing and with appropriate compensation to Apex.

PROJECT

NEW BEDFORD MARINE COMMERCE TERMINAL

OWNER

MASSACHUSETTS CLEAN ENERGY CENTER
55 SUMMER STREET, 9TH FLOOR
BOSTON, MASSACHUSETTS

NO.	DATE	DESCRIPTION	BY
1.	12-23-11	FOR CONSTRUCTION	CHM

PROJECT NO.	6690
CADD FILE	P-12-P16_P-26_X-4 PF
DESIGNED BY	GCD
DRAWN BY	GCD
CHECKED BY	CMM
DATE	08/04/2011
DRAWING SCALE	1"=50'

GRAPHIC SCALE

SCALE: 1"=50'

0 25 50 75 125 FEET

SHEET TITLE

BOTTOM OF CAD #3

DRAWING NO.

P-3.3

DRAFT

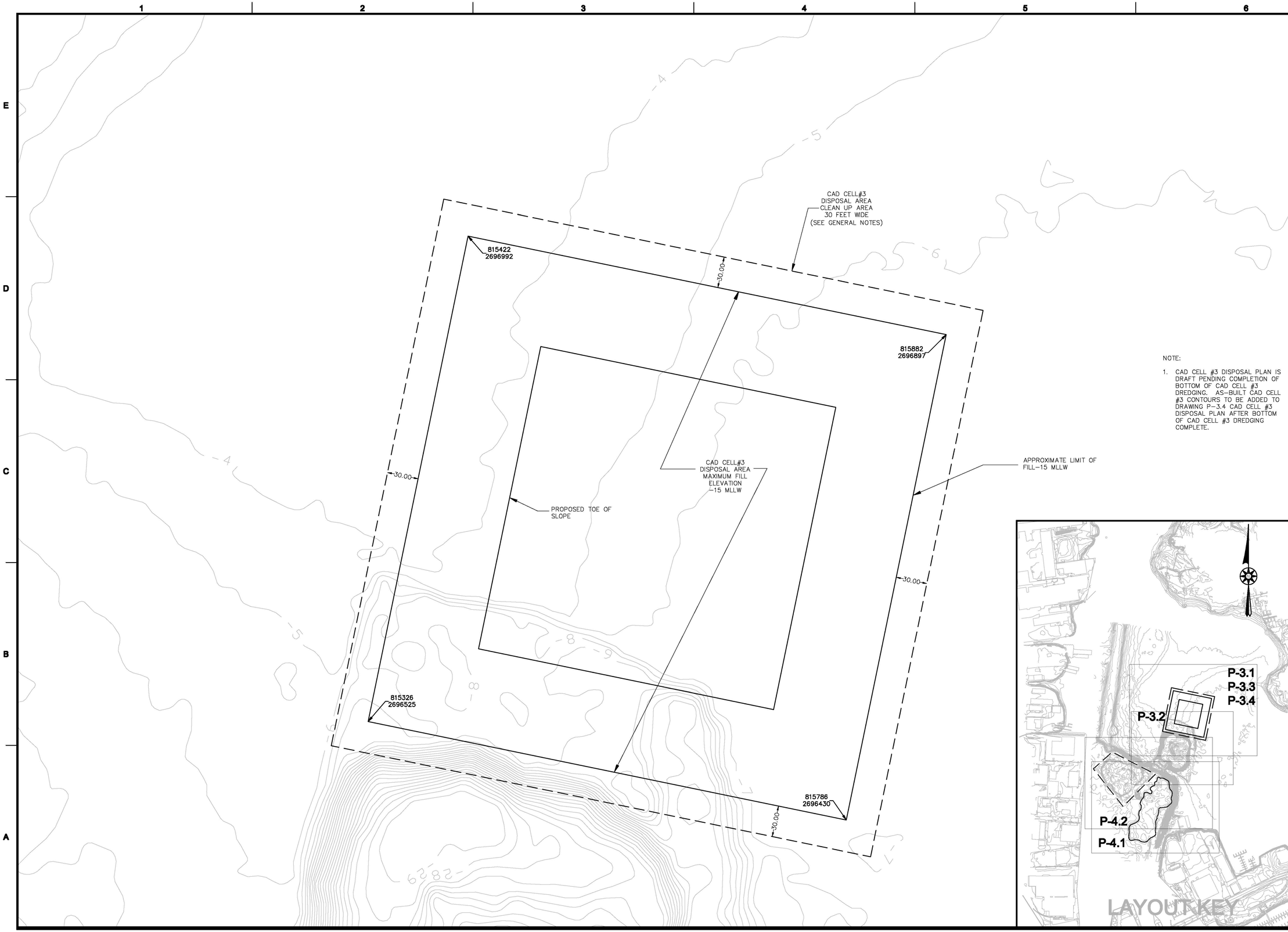

NOTE:

1. CAD CELL #3 DISPOSAL PLAN IS DRAFT PENDING COMPLETION OF BOTTOM OF CAD CELL #3 DREDGING. AS-BUILT CAD CELL #3 CONTOURS TO BE ADDED TO DRAWING P-3.4 CAD CELL #3 DISPOSAL PLAN AFTER BOTTOM OF CAD CELL #3 DREDGING COMPLETE.

APEX

ROCKVILLE, MD
SOUTH WINDSOR, CT - BOSTON, MA -
NEW BEDFORD, MA - HOLYOKE, MA

184 HIGH STREET, SUITE 502
BOSTON, MA 02210

55H CONNECTICUT AVENUE
SOUTH WINDSOR, CT

This drawings prepared by Apex for this project are instruments of Apex's service for use solely with respect to this project, and Apex shall be deemed the author of the Drawing and shall retain all common law, statutory and other reserved rights with respect thereto, including the copyright. The Documents shall not be used or other projects, for additions to this project or for completion of this project by others, except by agreement in writing and with appropriate compensation to Apex.

PROJECT

NEW BEDFORD MARINE COMMERCE TERMINAL

OWNER

MASSACHUSETTS CLEAN ENERGY CENTER
55 SUMMER STREET, 9TH FLOOR
BOSTON, MASSACHUSETTS

NO.	DATE	DESCRIPTION	BY
1.	12-23-11	FOR CONSTRUCTION	CHM

PROJECT NO.	6690
CADD FILE	
DESIGNED BY	GCD
DRAWN BY	GCD
CHECKED BY	CMM
DATE	08/25/2011
DRAWING SCALE	1"=40'

GRAPHIC SCALE

SCALE: 1"=40'

0 20 40 80 160 FEET

SHEET TITLE

CAD CELL #3 DISPOSAL PLAN

DRAWING NO.

P-3.4

DRAFT

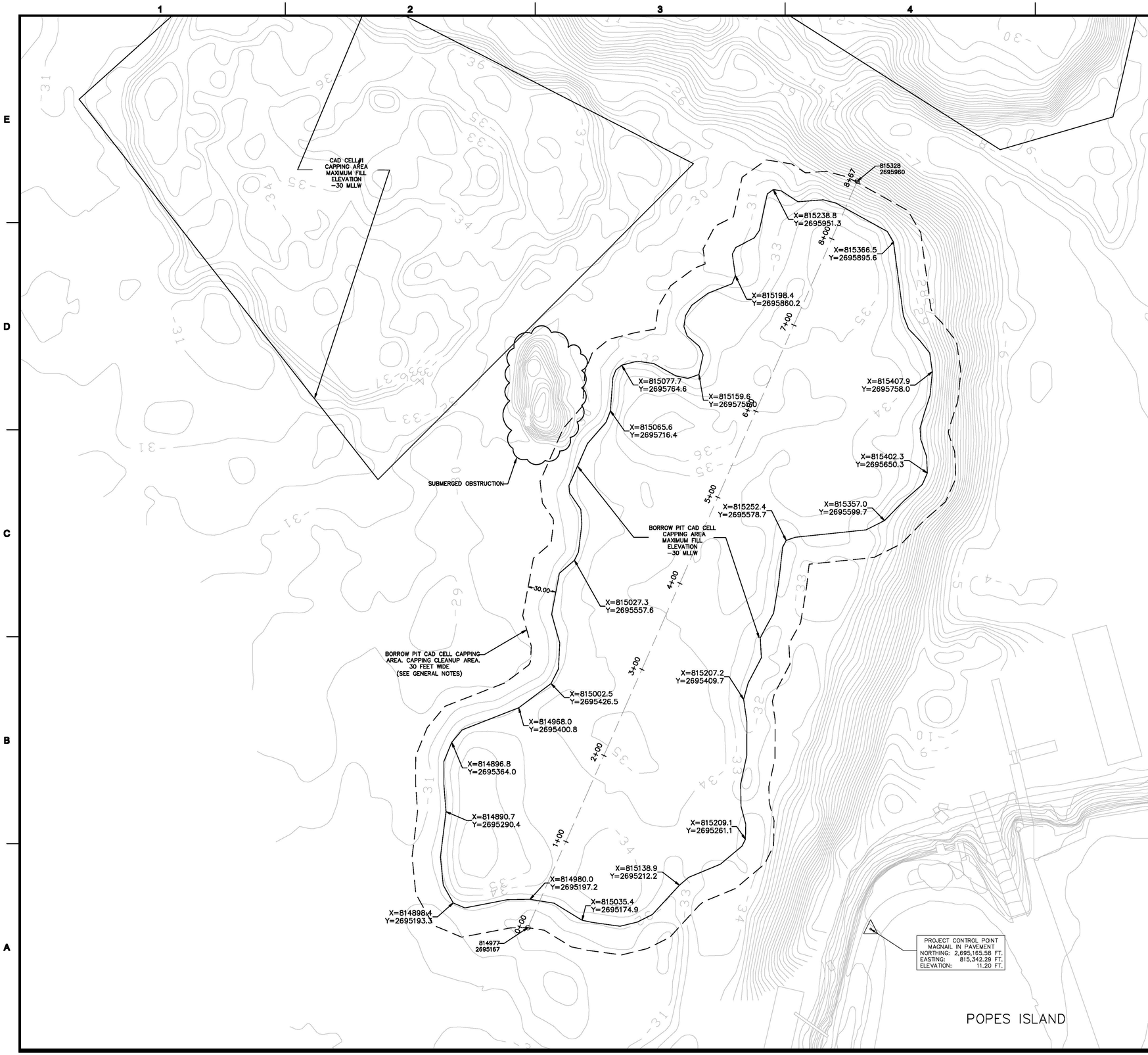

NOTES:

1. BORROW PIT PLAN CROSS-SECTIONS ARE SHOWN ON DRAWING X-4.1.
2. BORROW PIT DXF AND OR DWG FILE SHALL BE PROVIDED TO THE CONTRACTOR UPON WRITTEN REQUEST.

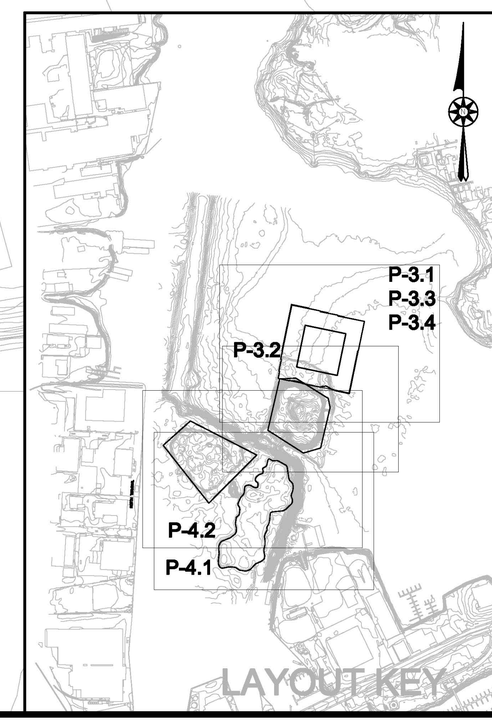

APEX

ROCKVILLE, MD
SOUTH WINDSOR, CT - BOSTON, MA -
NEW BEDFORD, MA - HOLYOKE, MA

184 HIGH STREET, SUITE 502
BOSTON, MA 02210

55H CONNECTICUT AVENUE
SOUTH WINDSOR, CT

This drawings prepared by Apex for this project are instruments of Apex's service for use solely with respect to this project, and Apex shall be deemed the author of the Drawing and shall retain all common law, statutory and other reserved rights with respect thereto, including the copyright. The Documents shall not be used on other projects, for additions to this project or for completion of this project by others, except by agreement in writing and with appropriate compensation to Apex.

PROJECT

NEW BEDFORD
MARINE COMMERCE
TERMINAL

OWNER

MASSACHUSETTS CLEAN ENERGY CENTER
55 SUMMER STREET, 9TH FLOOR
BOSTON, MASSACHUSETTS

NO.	DATE	DESCRIPTION	BY
1.	12-23-11	FOR CONSTRUCTION	CHM

PROJECT NO.	6690
CADD FILE	P-12-P16_P28_X-4 PR
DESIGNED BY	GCD
DRAWN BY	GCD
CHECKED BY	CHM
DATE	08/04/2011
DRAWING SCALE	1"=50'

GRAPHIC SCALE

SCALE: 1"=50'

0 25 50 75 125 FEET

SHEET TITLE

BORROW PIT
CAPPING PLAN

DRAWING NO.

P-4.1
DRAFT

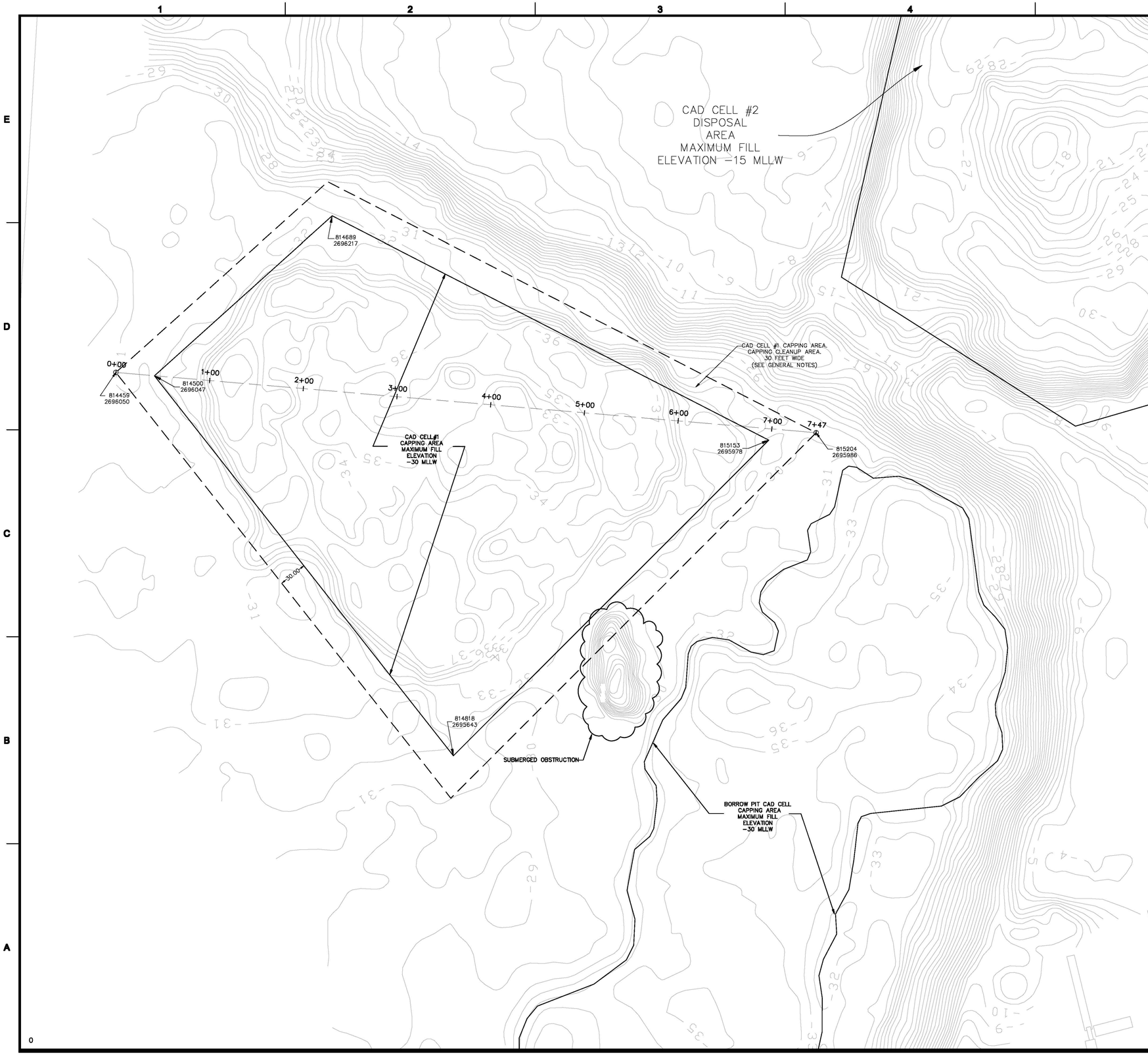

NOTE:

1. CAD CELL #1 CAPPING PLAN CROSS-SECTIONS ARE SHOWN ON DRAWING X-4.1.

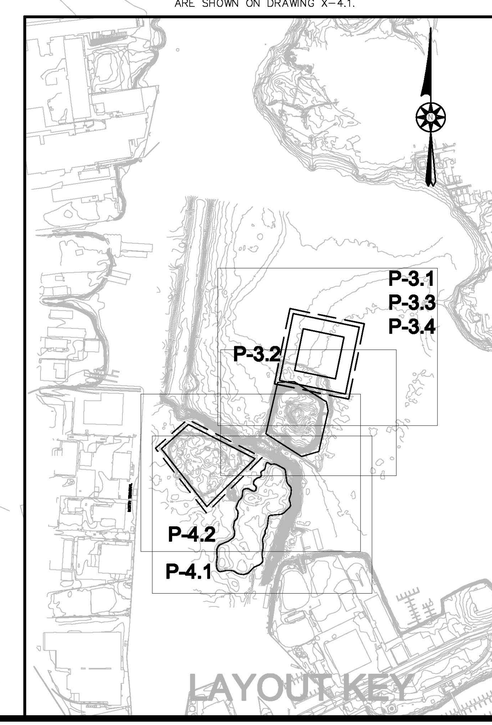

APEX

ROCKVILLE, MD
SOUTH WINDSOR, CT - BOSTON, MA -
NEW BEDFORD, MA - HOLYOKE, MA

184 HIGH STREET, SUITE 502
BOSTON, MA 02210

55H CONNECTICUT AVENUE
SOUTH WINDSOR, CT

This drawings prepared by Apex for this project are instruments of Apex's service for use solely with respect to this project, and Apex shall be deemed the author of the drawing and shall retain all common law, statutory and other reserved rights with respect thereto, including the copyright. The Documents shall not be used on other projects, for additions to this project or for completion of this project by others, except by agreement in writing and with appropriate compensation to Apex.

PROJECT

NEW BEDFORD
MARINE COMMERCE
TERMINAL

OWNER

MASSACHUSETTS CLEAN ENERGY CENTER
55 SUMMER STREET, 9TH FLOOR
BOSTON, MASSACHUSETTS

NO.	DATE	DESCRIPTION	BY
1.	12-23-11	FOR CONSTRUCTION	CHM

PROJECT NO.	6690
CADD FILE	P-12-P16_P28_X-4 PR
DESIGNED BY	GCD
DRAWN BY	GCD
CHECKED BY	CHM
DATE	08/04/2011
DRAWING SCALE	1"=50'

GRAPHIC SCALE

SCALE: 1"=50'

0 25 50 75 125 FEET

SHEET TITLE

CAD CELL #1
CAPPING PLAN

DRAWING NO.

P-4.2

DRAFT

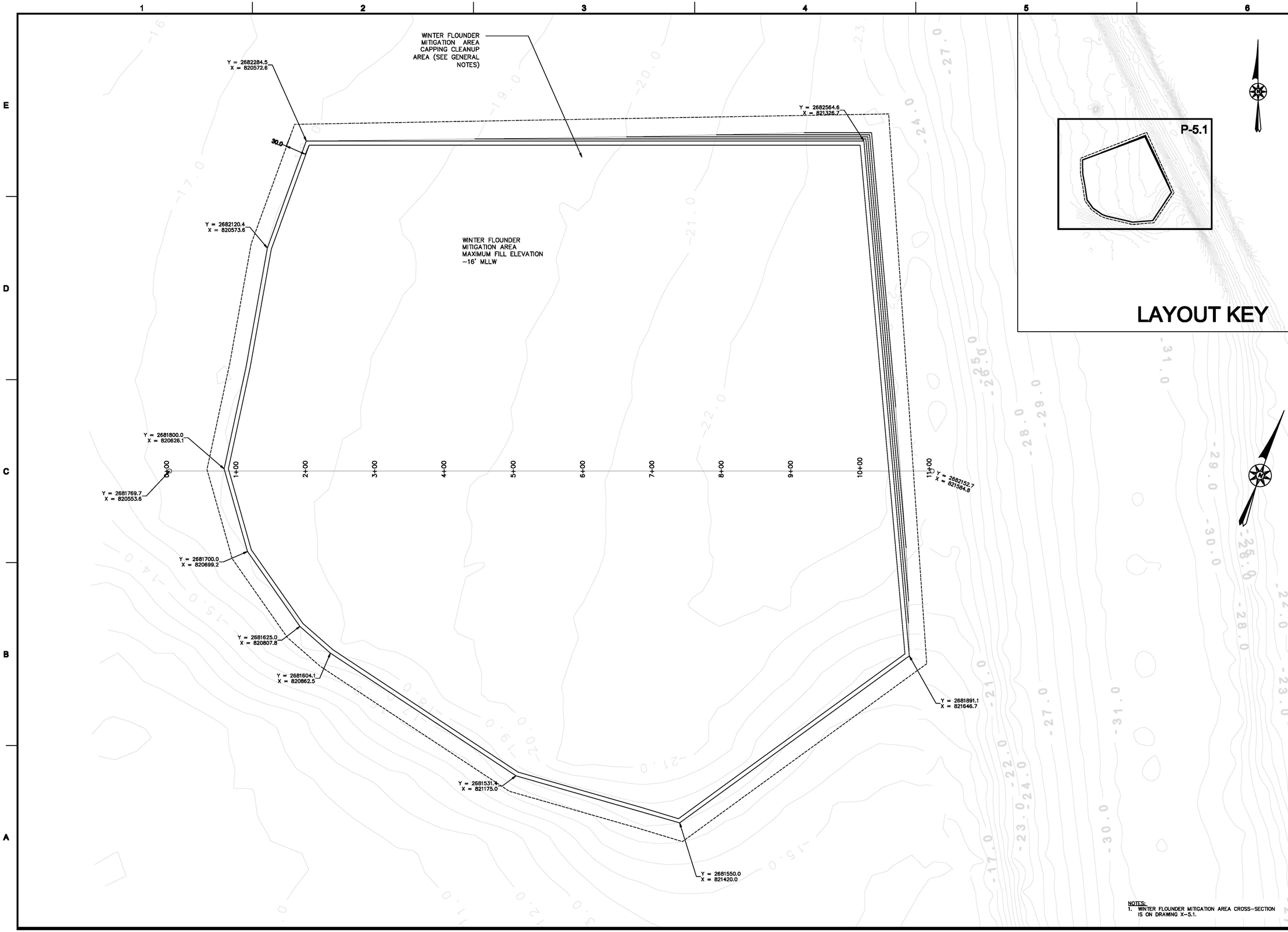

NOTES:
1. WINTER FLOUNDER MITIGATION AREA CROSS-SECTION IS ON DRAWING X-5.1.

APEX

ROCKVILLE, MD
SOUTH WINDSOR, CT - BOSTON, MA - NEW BEDFORD, MA - HOLYOKE, MA

184 HIGH STREET, SUITE 502
BOSTON, MA 02210

55H CONNECTICUT AVENUE
SOUTH WINDSOR, CT

THIS DRAWING PREPARED BY APEX FOR THIS PROJECT ARE INSTRUMENTS OF APEX'S SERVICE FOR USE SOLELY WITH RESPECT TO THIS PROJECT, AND APEX SHALL BE DEEMED THE AUTHOR OF THE DRAWING AND SHALL RETAIN ALL COMMON LAW, STATUTORY AND OTHER RESERVED RIGHTS WITH RESPECT THERETO, INCLUDING THE COPYRIGHT. THE DOCUMENTS SHALL NOT BE USED ON OTHER PROJECTS, FOR ADDITIONS TO THIS PROJECT OR FOR COMPLETION OF THIS PROJECT BY OTHERS, EXCEPT BY AGREEMENT IN WRITING AND WITH APPROPRIATE COMPENSATION TO APEX .

PROJECT
NEW BEDFORD MARINE COMMERCE TERMINAL

OWNER
MASSACHUSETTS CLEAN ENERGY CENTER
55 SUMMER STREET, 9TH FLOOR
BOSTON, MA

NO.	DATE	DESCRIPTION	BY
1	12/23/11	FOR CONSTRUCTION	CH

PROJECT NO.	6690
CADD FILE	MIT_OU3_FLNDR
DESIGNED BY	CWM
DRAWN BY	CWM
CHECKED BY	CHM
DATE	8-8-11
DRAWING SCALE	1"=60'

GRAPHIC SCALE
SCALE: 1"=60'
0 30 60 120

SHEET TITLE
WINTER FLOUNDER MITIGATION AREA PLAN

DRAWING NO.
P-5.1
DRAFT

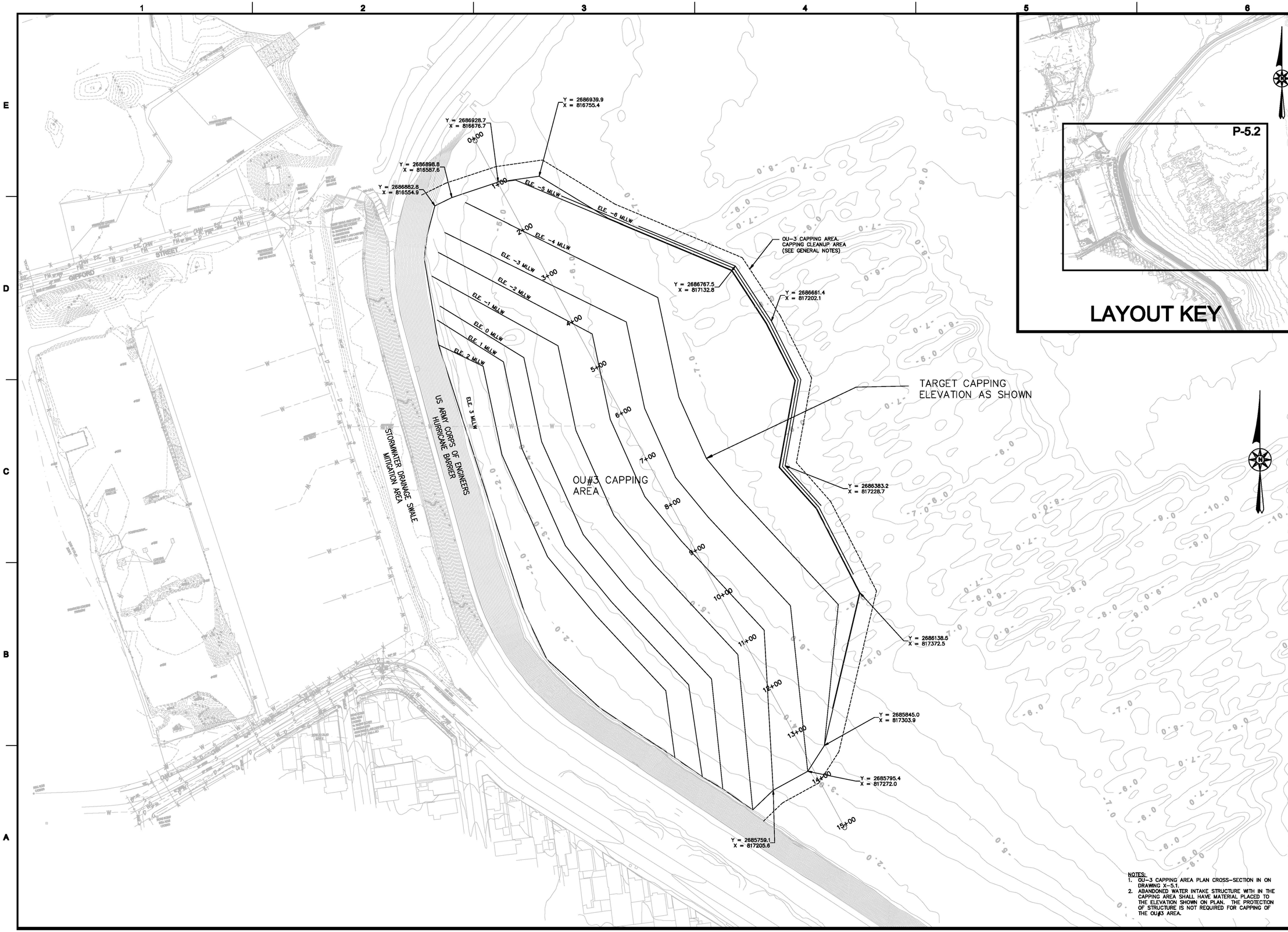

NOTES:
1. OU-3 CAPPING AREA PLAN CROSS-SECTION IN ON DRAWING X-5.1.
2. ABANDONED WATER INTAKE STRUCTURE WITH IN THE CAPPING AREA SHALL HAVE MATERIAL PLACED TO THE ELEVATION SHOWN ON PLAN. THE PROTECTION OF STRUCTURE IS NOT REQUIRED FOR CAPPING OF THE OU#3 AREA.

APEX

ROCKVILLE, MD
SOUTH WINDSOR, CT - BOSTON, MA - NEW BEDFORD, MA - HOLYOKE, MA

184 HIGH STREET, SUITE 802
BOSTON, MA 02210

55H CONNECTICUT AVENUE
SOUTH WINDSOR, CT

THIS DRAWING PREPARED BY APEX FOR THIS PROJECT ARE INSTRUMENTS OF APEX'S SERVICE FOR USE SOLELY WITH RESPECT TO THIS PROJECT, AND APEX SHALL BE DEEMED THE AUTHOR OF THE DRAWING AND SHALL RETAIN ALL COMMON LAW, STATUTORY AND OTHER RESERVED RIGHTS WITH RESPECT THERETO, INCLUDING THE COPYRIGHT. THE DOCUMENTS SHALL NOT BE USED ON OTHER PROJECTS, FOR ADDITIONS TO THIS PROJECT OR FOR COMPLETION OF THIS PROJECT BY OTHERS, EXCEPT BY AGREEMENT IN WRITING AND WITH APPROPRIATE COMPENSATION TO APEX .

PROJECT
NEW BEDFORD MARINE COMMERCE TERMINAL

OWNER
MASSACHUSETTS CLEAN ENERGY CENTER
55 SUMMER STREET, 9TH FLOOR
BOSTON, MA

NO.	DATE	DESCRIPTION	BY
2	03/16/12	EX. COND. UPDATE	CWM
1	12/23/11	FOR CONSTRUCTION	CHM

PROJECT NO.	6690
CADD FILE	MIT_OU3_FLNDR
DESIGNED BY	CWM
DRAWN BY	CWM
CHECKED BY	CHM
DATE	8-8-11
DRAWING SCALE	1"=80'

GRAPHIC SCALE
SCALE: 1"=80'
0 40 80 160

SHEET TITLE
OU-3 CAPPING AREA PLAN

DRAWING NO.
P-5.2
DRAFT