RETURN TO 1998 ROD AR INDEX

6.4. HS

Site: New Bedford
Break: 1.1
Other: Hot Spot

52146

SDMS DocID 52146

FINAL DESIGN ANALYSIS
NEW BEDFORD/HOT SPOT OPERABLE UNIT
SUPERFUND SITE
CONTRACT NO. DACW 45-91-C-0010
INTERAGENCY AGREEMENT NO. DW96934684-0
NEW BEDFORD, MASSACHUSETTS

Prepared by:

ERM-NEW ENGLAND, INC.
205 Portland Street
Boston, Massachusetts 02114

Prepared for:

U.S. ARMY ENGINEER DISTRICT, OMAHA
Corps of Engineers
Omaha, Nebraska 68102

November 1991

000128

FINAL DESIGN ANALYSIS
FOR
NEW BEDFORD HARBOR/HOT SPOT OPERABLE UNIT SUPERFUND SITE
NEW BEDFORD, MASSACHUSETTS

TABLE OF CONTENTS

		Page
1.0	INTRODUCTION	1-1
1.1	Purpose	1-1
1.2	Overview	1-2
2.0	BACKGROUND	2-1
2.1	Site History	2-1
2.2	Previous Studies	2-2
2.2.1	NUS Feasibility Study	2-2
2.2.2	E.C. Jordan Co. Feasibility Study	2-2
2.2.3	Record of Decision	2-3
3.0	SITE LAYOUT AND AVAILABLE UTILITIES	3-1
3.1	Hot Spot Location	3-1
3.2	Treatment Area	3-1
3.3	Utilities	3-2
3.3.1	Sewerage	3-2
3.3.2	Potable Water	3-3
3.3.3	Electrical	3-4
3.3.4	Telephone	3-4
3.3.5	Natural Gas	3-5
3.3.6	Transportation	3-5
4.0	TREATABILITY STUDIES	4-1
4.1	Introduction	4-1
4.2	Summary of Previous Studies	4-1
4.2.1	Settleability Studies	4-2
4.2.2	Flocculation/Filtration Tests	4-2

TABLE OF CONTENTS (Con't)

Page

4.2.3 Carbon Adsorption/UV Oxidation 4-3
4.2.4 Outstanding Issues 4-3

4.3 ERM Treatability Study 4-4

4.3.1 Primary Settling - Cell No. 1 4-4
4.3.2 Equalization - Cell No. 2 4-4
4.3.3 Chemical Addition/Flocculation 4-5
4.3.4 Secondary Settling - Cell No. 3 4-6
4.3.5 Filtration 4-6
4.3.6 UV/Oxidation 4-6
4.3.7 Polymer Removal 4-7
4.3.8 Summary 4-8

4.4 Test Burn 4-11

5.0 APPLICABLE OR RELEVANT AND APPROPRIATE REQUIREMENTS 5-1

5.1 Background and Overview of ARARs 5-1

5.1.1 Toxic Substances Control Act 5-2
5.1.2 Resource Conservation and Recovery Act 5-3
5.1.3 Clean Air Act 5-3
5.1.4 Clean Water Act 5-4
5.1.5 Floodplain Management 5-4
5.1.6 Wetlands Protection 5-4
5.1.7 Occupational Safety and Health Administration 5-4
5.1.8 Massachusetts - Hazardous Waste Management Regulations 5-5
5.1.9 Massachusetts - Solid Waste Management Regulations 5-5
5.1.10 Massachusetts - Ambient Air Quality Standards 5-5
5.1.11 Massachusetts - Air Pollution Control Regulations 5-5
5.1.12 Massachusetts - Wetlands Protection Requirements 5-6

TABLE OF CONTENTS (Con't)

Page

5.1.13 Massachusetts - Surface Water Quality Standards 5-6
5.1.14 Massachusetts - Certification for Dredging and Filling 5-6
5.1.15 Massachusetts - Wastewater Treatment 5-7
5.1.16 Massachusetts - Coastal Zone Management 5-7
5.1.17 Massachusetts - Employee and Community Right-to-Know 5-7

5.2 Incineration ARARs 5-8

5.2.1 Introduction 5-8
5.2.2 TSCA Regulations for PCB Incineration 5-8
5.2.3 RCRA Hazardous Waste Regulations 5-11
5.2.4 Massachusetts Air Pollution Control Regulations 5-12
5.2.5 Federal and State Ambient Air Quality Standards 5-14

5.3 Water Discharge ARARs 5-15

5.3.1 Introduction 5-15
5.3.2 Technology-Based Treatment Requirements 5-16
5.3.3 Evaluation of Water Quality Based Treatment Requirements 5-20
5.3.4 Stormwater, Dewatering and Blowdown Treatment Requirements 5-23
5.3.5 Operation, Maintenance and Monitoring Requirements 5-23
5.3.6 Recordkeeping and Reporting 5-25
5.3.7 Other Administrative Requirements 5-26

5.4 Ash Handling ARARs 5-26

5.4.1 Introduction 5-26
5.4.2 TSCA and RCRA Hazardous Waste Regulations 5-27

5.5 Sediment Dewatering ARARs 5-27

5.5.1 Introduction 5-27

TABLE OF CONTENTS (Con't)

Page

5.5.2 TSCA and RCRA Hazardous Waste Regulations..... 5-28

5.6 General Facility Standards..... 5-28

5.6.1 Introduction..... 5-28
5.6.2 General Waste Analysis..... 5-29
5.6.3 Security..... 5-29
5.6.4 General Inspection..... 5-30
5.6.5 Training Personnel..... 5-31
5.6.6 Contingency Planning and Emergency Procedures..... 5-32
5.6.7 Closure Requirements..... 5-35
5.6.8 Post-Closure Requirements..... 5-36

5.7 Administrative Requirements..... 5-37

5.7.1 Introduction..... 5-37
5.7.2 Permitting And Approving Authorities..... 5-37
5.7.3 Construction and Operating Permits..... 5-38
5.7.4 Permitting Timeframes..... 5-38
5.7.5 Permitting And Application Fees..... 5-38
5.7.6 Monitoring and Compliance Testing Requirements..... 5-38
5.7.7 Agency Regulations..... 5-39

6.0 PROCESS DESCRIPTION..... 6-1

6.1 Overview..... 6-1
6.2 Dredging..... 6-2
6.3 Wastewater Treatment..... 6-3

6.3.1 Initial Settling/Floating Debris/Oil Removal..... 6-3

6.3.1.1 Air Emissions Controls Options..... 6-4

6.3.2 Equalization..... 6-6
6.3.3 Flocculation/Physical/Chemical Treatment..... 6-7
6.3.4 Secondary Settling..... 6-8

TABLE OF CONTENTS (Con't)

Page

6.3.5 Filtration 6-9
6.3.6 UV/Oxidation 6-11
6.3.7 Monitoring Requirements 6-11

6.4 Sediment Dewatering 6-13

6.4.1 Sediment Storage and Transfer 6-13
6.4.2 Sediment Dewatering 6-14
6.4.3 Filter Cake Handling 6-14
6.4.4 Monitoring Requirements 6-15

6.5 Incineration 6-15

6.5.1 Available Units 6-15
6.5.2 Plume Modeling 6-16
6.5.3 Operation 6-16
6.5.4 Monitoring Requirements 6-17

6.6 Ash Handling 6-18

6.7 Instrumentation and Controls 6-20

7.0 PROCEDURAL COMPONENTS OF DESIGN ANALYSIS 7-1

7.1 Introduction 7-1

7.2 Safety and Health Provisions 7-1

7.2.1 Construction Industry Standards - 19 CFR Part 1926 7-1
7.2.2 Occupational Safety and Health Standards - 29 CFR Part 1910 7-2
7.2.3 Hazardous Waste Operations and Emergency Response - 29 CFR Section 1910.120 7-2

TABLE OF CONTENTS (Con't)

Page

7.3 Air Emissions 7-6

7.3.1 Air Emission Monitoring and Controls 7-6
7.3.2 Ambient Air Monitoring Studies 7-7
7.3.3 Emission Modeling and Testing 7-10
7.3.4 Ambient Standards for PCBs 7-10
7.3.5 Basis for Ambient PCB Action Levels 7-11
7.3.6 Basis for the Number and Location of the Ambient Air Monitor 7-12
7.3.7 Basis for the Meteorological Station 7-13
7.3.8 Basis for the Ambient Monitoring Frequency and Sampling Time 7-13
7.3.9 Basis for the PCB Action Levels and Emission Controls 7-15

7.4 Site Maintenance 7-16

7.4.1 Operations 7-16
7.4.2 Closure of Treatment System 7-17
7.4.3 Post Closure 7-17

APPENDIX A ERM Treatability Study Background Information

APPENDIX B Peroxidation Systems, Inc. UV/Oxidation Design Study

APPENDIX C Test Plan for Evaluating the Incinerability of the New Bedford Harbor/Hot Spot Operable Unit Sediment

APPENDIX D Test Burn Final Report

APPENDIX E Calculations Supporting Wastewater Effluent Limits

APPENDIX F Design Calculations

APPENDIX G Calculations Supporting Air Emissions of PCBs Determinations

LIST OF TABLES

		Follows Page
Table 4-1	Summary of Treatability Study Results	4-9
Table 5-1	Applicable or Relevant and Appropriate Requirements for the Design of the New Bedford Incinerator	5-8
Table 5-2	Acute and Chronic Marine Water Quality Criteria	5-20
Table 5-3	Comparison of Achievable and Allowable Effluent Concentrations	5-21
Table 7-1	Remedial Activities and Hazards	7-4
Table 7-2	Potential Chemical Hazards	7-5

LIST OF FIGURES

		Follows Page
Figure 2-1	Site Location Map Hot Spot Area	2-1
Figure 2-2	Upper Acushnet River Estuary and Hot Spot Area	2-2
Figure 3-1	Hot Spot and Treatment Area	3-1
Figure 4-1	TSS Concentrations in Clarified Samples	4-9
Figure 4-2	Carbon Isotherms	4-10

FINAL DESIGN ANALYSIS
FOR
NEW BEDFORD HARBOR/HOT SPOT OPERABLE UNIT SUPERFUND SITE
NEW BEDFORD, MASSACHUSETTS

TABLE OF CONTENTS

		Page
1.0	INTRODUCTION	1-1
1.1	Purpose	1-1
1.2	Overview	1-2
2.0	BACKGROUND	2-1
2.1	Site History	2-1
2.2	Previous Studies	2-2
2.2.1	NUS Feasibility Study	2-2
2.2.2	E.C. Jordan Co. Feasibility Study	2-2
2.2.3	Record of Decision	2-3
3.0	SITE LAYOUT AND AVAILABLE UTILITIES	3-1
3.1	Hot Spot Location	3-1
3.2	Treatment Area	3-1
3.3	Utilities	3-2
3.3.1	Sewerage	3-2
3.3.2	Potable Water	3-3
3.3.3	Electrical	3-4
3.3.4	Telephone	3-4
3.3.5	Natural Gas	3-5
3.3.6	Transportation	3-5
4.0	TREATABILITY STUDIES	4-1
4.1	Introduction	4-1
4.2	Summary of Previous Studies	4-1
4.2.1	Settleability Studies	4-2
4.2.2	Flocculation/Filtration Tests	4-2

TABLE OF CONTENTS (Con't)

Page

4.2.3 Carbon Adsorption/UV Oxidation 4-3
4.2.4 Outstanding Issues 4-3

4.3 ERM Treatability Study 4-4

4.3.1 Primary Settling - Cell No. 1 4-4
4.3.2 Equalization - Cell No. 2 4-4
4.3.3 Chemical Addition/Flocculation 4-5
4.3.4 Secondary Settling - Cell No. 3 4-6
4.3.5 Filtration 4-6
4.3.6 UV/Oxidation 4-6
4.3.7 Polymer Removal 4-7
4.3.8 Summary 4-8

4.4 Test Burn 4-11

5.0 APPLICABLE OR RELEVANT AND APPROPRIATE REQUIREMENTS 5-1

5.1 Background and Overview of ARARs 5-1

5.1.1 Toxic Substances Control Act 5-2
5.1.2 Resource Conservation and Recovery Act 5-3
5.1.3 Clean Air Act 5-3
5.1.4 Clean Water Act 5-4
5.1.5 Floodplain Management 5-4
5.1.6 Wetlands Protection 5-4
5.1.7 Occupational Safety and Health Administration 5-4
5.1.8 Massachusetts - Hazardous Waste Management Regulations 5-5
5.1.9 Massachusetts - Solid Waste Management Regulations 5-5
5.1.10 Massachusetts - Ambient Air Quality Standards 5-5
5.1.11 Massachusetts - Air Pollution Control Regulations 5-5
5.1.12 Massachusetts - Wetlands Protection Requirements 5-6

TABLE OF CONTENTS (Con't)

Page

5.1.13 Massachusetts - Surface Water Quality Standards 5-6
5.1.14 Massachusetts - Certification for Dredging and Filling 5-6
5.1.15 Massachusetts - Wastewater Treatment 5-7
5.1.16 Massachusetts - Coastal Zone Management 5-7
5.1.17 Massachusetts - Employee and Community Right-to-Know 5-7

5.2 Incineration ARARs 5-8

5.2.1 Introduction 5-8
5.2.2 TSCA Regulations for PCB Incineration 5-8
5.2.3 RCRA Hazardous Waste Regulations 5-11
5.2.4 Massachusetts Air Pollution Control Regulations 5-12
5.2.5 Federal and State Ambient Air Quality Standards 5-14

5.3 Water Discharge ARARs 5-15

5.3.1 Introduction 5-15
5.3.2 Technology-Based Treatment Requirements 5-16
5.3.3 Evaluation of Water Quality Based Treatment Requirements 5-20
5.3.4 Stormwater, Dewatering and Blowdown Treatment Requirements 5-23
5.3.5 Operation, Maintenance and Monitoring Requirements 5-23
5.3.6 Recordkeeping and Reporting 5-25
5.3.7 Other Administrative Requirements 5-26

5.4 Ash Handling ARARs 5-26

5.4.1 Introduction 5-26
5.4.2 TSCA and RCRA Hazardous Waste Regulations 5-27

5.5 Sediment Dewatering ARARs 5-27

5.5.1 Introduction 5-27

TABLE OF CONTENTS (Con't)

Page

5.5.2 TSCA and RCRA Hazardous Waste Regulations..... 5-28

5.6 General Facility Standards..... 5-28

5.6.1 Introduction..... 5-28
5.6.2 General Waste Analysis..... 5-29
5.6.3 Security..... 5-29
5.6.4 General Inspection..... 5-30
5.6.5 Training Personnel..... 5-31
5.6.6 Contingency Planning and Emergency Procedures..... 5-32
5.6.7 Closure Requirements..... 5-35
5.6.8 Post-Closure Requirements..... 5-36

5.7 Administrative Requirements..... 5-37

5.7.1 Introduction..... 5-37
5.7.2 Permitting And Approving Authorities..... 5-37
5.7.3 Construction and Operating Permits..... 5-38
5.7.4 Permitting Timeframes..... 5-38
5.7.5 Permitting And Application Fees..... 5-38
5.7.6 Monitoring and Compliance Testing Requirements..... 5-38
5.7.7 Agency Regulations..... 5-39

6.0 PROCESS DESCRIPTION..... 6-1

6.1 Overview..... 6-1
6.2 Dredging..... 6-2
6.3 Wastewater Treatment..... 6-3

6.3.1 Initial Settling/Floating Debris/Oil Removal..... 6-3

6.3.1.1 Air Emissions Controls Options..... 6-4

6.3.2 Equalization..... 6-6
6.3.3 Flocculation/Physical/Chemical Treatment..... 6-7
6.3.4 Secondary Settling..... 6-8

TABLE OF CONTENTS (Con't)

Page

6.3.5 Filtration 6-9
6.3.6 UV/Oxidation 6-11
6.3.7 Monitoring Requirements 6-11

6.4 Sediment Dewatering 6-13

6.4.1 Sediment Storage and Transfer 6-13
6.4.2 Sediment Dewatering 6-14
6.4.3 Filter Cake Handling 6-14
6.4.4 Monitoring Requirements 6-15

6.5 Incineration 6-15

6.5.1 Available Units 6-15
6.5.2 Plume Modeling 6-16
6.5.3 Operation 6-16
6.5.4 Monitoring Requirements 6-17

6.6 Ash Handling 6-18

6.7 Instrumentation and Controls 6-20

7.0 PROCEDURAL COMPONENTS OF DESIGN ANALYSIS 7-1

7.1 Introduction 7-1

7.2 Safety and Health Provisions 7-1

7.2.1 Construction Industry Standards - 19 CFR Part 1926 7-1
7.2.2 Occupational Safety and Health Standards - 29 CFR Part 1910 7-2
7.2.3 Hazardous Waste Operations and Emergency Response - 29 CFR Section 1910.120 7-2

TABLE OF CONTENTS (Con't)

Page

7.3 Air Emissions 7-6

7.3.1 Air Emission Monitoring and Controls 7-6
7.3.2 Ambient Air Monitoring Studies 7-7
7.3.3 Emission Modeling and Testing 7-10
7.3.4 Ambient Standards for PCBs 7-10
7.3.5 Basis for Ambient PCB Action Levels 7-11
7.3.6 Basis for the Number and Location of the Ambient Air Monitor 7-12
7.3.7 Basis for the Meteorological Station 7-13
7.3.8 Basis for the Ambient Monitoring Frequency and Sampling Time 7-13
7.3.9 Basis for the PCB Action Levels and Emission Controls 7-15

7.4 Site Maintenance 7-16

7.4.1 Operations 7-16
7.4.2 Closure of Treatment System 7-17
7.4.3 Post Closure 7-17

APPENDIX A ERM Treatability Study Background Information

APPENDIX B Peroxidation Systems, Inc. UV/Oxidation Design Study

APPENDIX C Test Plan for Evaluating the Incinerability of the New Bedford Harbor/Hot Spot Operable Unit Sediment

APPENDIX D Test Burn Final Report

APPENDIX E Calculations Supporting Wastewater Effluent Limits

APPENDIX F Design Calculations

APPENDIX G Calculations Supporting Air Emissions of PCBs Determinations

LIST OF TABLES

		Follows Page
Table 4-1	Summary of Treatability Study Results	4-9
Table 5-1	Applicable or Relevant and Appropriate Requirements for the Design of the New Bedford Incinerator	5-8
Table 5-2	Acute and Chronic Marine Water Quality Criteria	5-20
Table 5-3	Comparison of Achievable and Allowable Effluent Concentrations	5-21
Table 7-1	Remedial Activities and Hazards	7-4
Table 7-2	Potential Chemical Hazards	7-5

LIST OF FIGURES

		Follows Page
Figure 2-1	Site Location Map Hot Spot Area	2-1
Figure 2-2	Upper Acushnet River Estuary and Hot Spot Area	2-2
Figure 3-1	Hot Spot and Treatment Area	3-1
Figure 4-1	TSS Concentrations in Clarified Samples	4-9
Figure 4-2	Carbon Isotherms	4-10

SECTION 1.0

INTRODUCTION

1.1 Purpose

A Feasibility Study (Draft Final, Hot Spot Feasibility Study, New Bedford Harbor, July 1989) and a Record of Decision (April 6, 1990) have been prepared for the Hot Spots Operable Unit for the New Bedford Harbor Superfund Site remediation. These documents recommend that 10,000 cubic yards (cy) of sediments that are highly contaminated with polychlorinated biphenyls (PCBs) (greater that 4,000 ppm) be remediated as follows:

- Dredging the contaminated sediment material from the estuary and pumping this material to on-shore facilities.
- Allowing sediment material to settle in the confined disposal facility (CDF) located on-shore.
- Dewatering the settled sediment material prior to PCB destruction by incineration.
- Disposing of the incinerator ash material on-site in the CDF (solidification/stabilization of the ash material may be required).
- Treating wastewater generated by dredging and dewatering using the following treatment steps:
  - coagulation and flocculation
  - settling
  - filtration

- carbon adsorption or ultraviolet/hydrogen peroxide treatment.

ERM-New England, inc. (ERM) was contracted by the United States Army Corps of Engineers (USACE) on October 31, 1990 to prepare design documents for the USACE to advertise, solicit bids and award a contract to implement the proposed remedy for this operable unit. This document represents the Final Design Analysis Report summarizing the regulatory, functional, and engineering criteria (including calculations) that provide the design basis of the proposed remedy.

1.2 Overview

This Final Design Analysis Report is divided into the following sections:

- Section 1 - Introduction - Presents the purpose and an overview of this document.

- Section 2 - Background - Presents a brief summary of the site history and the results of previous investigations and studies, and EPA's Record of Decision.

- Section 3 - Site Layout and Available Utilities - Presents information on the on-shore remediation areas, the physical layout of the Pilot Study Cove Area and identifies existing utilities available at the site.

- Section 4 - Treatability Studies - Briefly summarizes previous wastewater treatability studies, summarizes the treatability studies performed under this contract, and summarizes the overall results of these studies.

- Section 5 - ARARs Analysis - Summarizes the review and evaluation of the applicable and relevant and appropriate requirements (ARARs) that pertain to this remedial action.

- Section 6 - Process Description - Provides an overview of the proposed remediation system including dredging, wastewater treatment, sediment dewatering, incineration and ash handling. Also summarizes the design criteria and basis of the remediation system.

- Section 7 - Procedural Components of Design Analysis - Provides an overview of the other aspects of the design specifications pertaining to health and safety, air monitoring and site maintenance. Design documents are provided separately as appendices.

Appendices are included which provide additional information to support the text. The appendices also include data that support the design basis. There are seven appendices, as follows:

- Appendix A - ERM Treatability Study Background Information

- Appendix B - Peroxidation Systems, Inc. UV/Oxidation Design Study

- Appendix C - Test Plan for Evaluating the Incinerability of the New Bedford Harbor/Hot Spot Operable Unit Sediment

- Appendix D - Test Burn Report

- Appendix E - Calculations Supporting Wastewater Effluent Limits

- Appendix F - Design Calculations

- Appendix G - Documentations Supporting Air Emission Determinations.

Separate documents that are included as part of this submittal include:

- Design Drawings
- Specification Package
- Cost Estimate Backup Data

SECTION 2.0

BACKGROUND

2.1 Site History

New Bedford, Massachusetts, is a port city located at the head of Buzzards Bay, approximately 55 miles south of Boston. Historically, New Bedford is nationally known for its role in the development of the whaling industry in the early 1800s. Today, the harbor is home port to one of the largest commercial fishing fleets in the United States.

In 1976, the United States Environmental Protection Agency (EPA) conducted a New England-wide survey for PCBs (EPA, 1976). During that survey, high levels of PCB contamination were found in various locations throughout New Bedford Harbor. Field studies conducted in the late 1970s and early 1980s showed PCB concentrations in marine sediment over a 985-acre area to range from a few parts per million (ppm) to over 100,000 ppm. In addition to PCBs, heavy metals (notably cadmium, chromium, copper and lead) were found in the sediment at concentrations ranging from a few ppm to over 5,000 ppm. New Bedford, the Acushnet River and areas in the river where PCB Hot Spots have been identified (PCB concentrations greater than 4,000 ppm) are shown in Figure 2-1.

In July 1982, New Bedford Harbor was added to the Superfund National Priorities List (NPL), where it is currently listed in Group 2 as Site Number 76. Following the NPL listing, in late 1982 EPA Region 1 initiated a comprehensive assessment of the PCB problem in the New Bedford area. Results of this assessment were presented in a Remedial Action Master Plan (RAMP) for the site in May 1983 (Weston 1983). Concurrent with the RAMP, EPA complied a data base of sampling and analytical results of previous studies in New Bedford Harbor. The final report summarizing this data was issued by EPA in August 1983 (Metcalf & Eddy, 1983).

2.2 Previous Studies

2.2.1 NUS Feasibility Study

In 1983, NUS Corporation (NUS) prepared a work plan which included plans for a feasibility study (FS) of remedial action alternatives for the highly contaminated mudflats and sediments of the Upper Acushnet River Estuary portion of the New Bedford Harbor located north of the Coggeshall Street Bridge. This part of the Harbor is referred to as the "Hot Spots" Area and is shown in Figure 2-2. In October 1983, NUS received authorization to proceed with the FS of the Upper Estuary.

EPA received numerous comments in August 1984 on the options identified in the NUS FS. Many of the comments concerned the adequacy of available dredging techniques and potential impacts of dredging on the Harbor due to resuspension of contaminated sediment. Potential release of contaminated water (leachate) from an unlined disposal site was identified as another item of concern.

To respond to these comments, EPA determined it was necessary to conduct additional studies before selecting the remedy for the Upper Estuary. The focus of these additional studies was the feasibility of dredging and disposal of contaminated sediment. At the request of EPA, the USACE conducted bench- and laboratory-scale studies, which are summarized in the report "Engineering Feasibility Study (EFS) of Dredging and Dredge Material Disposal Alternative of the Acushnet River Estuary" (Francingues and Acrett, 1988). The EFS was subsequently expanded to include a Pilot Study of Dredging and Disposal Activities, which was conducted in New Bedford Harbor during the late fall and winter of 1988-1989.

2.2.2 E.C. Jordan Co. Feasibility Study

An overall FS for New Bedford Harbor was prepared by E.C. Jordan Co. and Ebasco under contract to EPA (EPA Contract No. 68-01-7250; Work

Assignment No. 04-1L43). To speed up the initiation of remedial activities, EPA divided the New Bedford Harbor Site into two operable units: the Hot Spots Area in the Upper Estuary; and the Acushnet River Estuary including the Lower Harbor and the Upper Buzzards Bay.

The Hot Spots represent approximately 5 acres located along the western bank of the Acushnet River. Sediment materials in this area have PCB concentrations ranging from 4,000 to over 100,000 ppm. Sediment metal concentrations (cadium, chromium, copper and lead) range from below detection limits to approximately 4,000 ppm.

2.2.3 Record of Decision

Based on the results from the FS, EPA issued a Record of Decision (ROD) on April 6, 1990 for the remediation of the second operable unit -- the Hot Spots. The ROD requires the following:

- Dredging - Approximately 10,000 cubic yards of PCB-contaminated sediments will be removed using a cutterhead dredge. Dredging will occur in the Hot Spots Area at depths of up to four feet to remove sediments with PCB concentrations of 4,000 ppm or greater. (Various control options will be incorporated into the design to minimize and control sediment resuspension, including silt curtains, water quality monitoring, and various dredging operational procedures.)

- Transportation and Dewatering - The dredged sediments will be transported to the Pilot Study Cove Area by a hydraulic pipeline, where the sediments will be dewatered. The wastewater produced during the dewatering process will be treated to reduce PCBs and heavy metals to meet standards set under the Clean Water Act and State regulations prior to being discharged back into the Harbor.

- Incineration - The dewatered sediments will be incinerated in a transportable incinerator that will be sited at the Pilot Study Cove Area. The incinerator will be designed and operated to achieve a 99.9999% destruction of PCBs. Exhaust gases will be passed through air pollution control devices before being released into the atmosphere to ensure that appropriate health and safety and air quality requirements are met.

- Stabilization - Following incineration, the Toxicity Characteristic Leaching Procedure (TCLP), a leaching test, will be performed on the ash to determine if it exhibits the characteristics of toxicity and is, therefore, considered a hazardous waste under the Resource Conservation and Recovery Act (RCRA). If the TCLP test reveals that the ash is a RCRA hazardous waste, the ash will be solidified such that metals no longer leach from the ash at concentrations that exceed the RCRA TCLP standards. (Ash generated during the test burn has been tested and indicates that stabilization/solidification should not be required for bottom ash material. However, fly ash material may still need to be stabilized/solidified. The design documents include ash testing to ensure all material is suitable for disposal on-site.)

In addition, the ROD states that the Hot Spots remedial action is an interim action, and only part of the overall site remedy. As mentioned above, the Hot Spots remediation is the second of two operable units for the cleanup of New Bedford Harbor. However, due to its limited scope, the Hot Spots operable unit will be addressed first.

SECTION 3.0

SITE LAYOUT AND AVAILABLE UTILITIES

3.1 Hot Spot Location

The Hot Spots Area of the New Bedford Harbor is located on the western bank of the upper Acushnet River Estuary, directly adjacent to the Aerovox facility (refer to Figure 3-1). The water bottom slopes gently from the shoreline toward the center of the river channel in this area. Low tides expose some of the Hot Spots Area as mudflats. Low water elevations range from -1.6 to -2.2 feet mean sea level (MSL). Sediment in the Hot Spots Area are 75 to 80 percent silts and marine clays, with 20 to 25 percent of the grains not passing through the 200-mesh sieve (i.e., sands).

In order to remove sediment materials down to the PCB concentration action level of 4,000 ppm, a total of 10,000 cy (in-situ) of sediments must be dredged. The Hot Spots action level of 4,000 ppm was chosen to achieve the lowest sediment remediation volume that would remove the greatest amount of PCBs from the Harbor.

3.2 Treatment Area

The Pilot Study Cove Area consists of approximately 29 acres located in the Upper Estuary on the western shore immediately north of the Coggeshall Street Bridge. The Pilot Study Cove Area is approximately 1.5 miles downstream from the Hot Spots Area. The site was originally the location of a textile mill which was reportedly destroyed in the 1930s. For the pilot studies performed in the Fall of 1988, a berm was installed to expand the site. A confined disposal facility (CDF) was constructed within this berm to provide a location to store wastes generated during the pilot studies.

Under the site preparation contract to be initiated during the Fall of 1991 (work may carry over until the Spring/Summer of 1992 and overlap with the remediation contract), the approximately 2,200 cubic yards of PCB-

contaminated dredged sediment, the approximately 3,900 cubic yards of clean dredged sediment used as fill, and the foundations and other miscellaneous debris in the CDF will be removed and placed against the existing eastern berm of the CDF. The CDF will then be lined with a flexible membrane and covered with fill material. The cover material over the liner will consist of some of the clean dredge sediments previously placed in the CDF. In addition, the dividing walls of the CDF will be upgraded for use during the remediation, as well as performance of other site improvements (grading, fencing, etc.). The upgraded CDF will then be suitable for holding the highly PCB-contaminated sediment from the Hot Spots dredging. The upgraded CDF will have sufficient capacity to hold the 10,000 cy (which is expected to expand to 14,000 cy after dredging) of sediment material to be dredged from the Hot Spots Area. There is also sufficient area adjacent to the CDF (the site of the existing soccer field) for the dewatering equipment, incinerator, ash storage and wastewater treatment systems.

The Pilot Study Cove Area is bordered on the north by an inlet of the Acushnet River, on the east by the Acushnet River, on the south and west by light industrial/commercial facilities. The Pilot Study Cove Area property is currently owned by the City of New Bedford. Access to the site is from Sawyer Street, off of Mitchell Street.

3.3 Utilities

Utilities available at the site include sewerage, potable water, electrical, telephone, natural gas and transportation. Each is discussed in detail below.

3.3.1 Sewerage

A six-inch sewer line was run to the Pilot Study Cove Area during the previous pilot studies. This line enters the site from the south and is connected to an 8-inch sewer line that runs under Sawyer Street. This 8-inch sewer line then connects to an interceptor sewer which passes under

Belleville Avenue toward the New Bedford Municipal Wastewater Treatment Plant. This interceptor line currently flows under surcharge conditions and would not be capable of handling a substantial increase in wastewater flow due to the Hot Spots remediation. The New Bedford Wastewater Treatment Plant would also be unable to accept treated process wastewater flow, but would be able to accept sanitary wastewater flows.

The New Bedford Department of Public Works has confirmed there is a sewer extension ban in the Pilot Cove Area. Therefore, only sanitary wastewaters (personal hygiene and non-hazardous showering) will be considered for discharge to the sanitary collection system. The City of New Bedford is presently petitioning the USEPA for an exemption to the sewer extension ban for this wastewater flow. Estimates of sanitary wastewater discharges to the New Bedford collection system range from approximately 1,000 gpd to 2,500 gpd, depending on the level of operations.

3.3.2 Potable Water

An 8-inch potable water line is located under Sawyer Street with two fire hydrants near the Pilot Study Cove Area. The New Bedford Water Department indicates that this line has limited capacity and would only be capable of addressing limited demand. A hydrant flow test performed at the intersection of Sawyer Street and Mitchell Street in 1970 indicated that the line had a substantially yield of over 800 gpm at 70 psi residual pressure. However, the capacity of this line is substantially reduced due to tuberculation and additional input from the City will be required to ensure a sufficient water supply. Prior to making a connection to the system, the Remediation Contractor will need to verify that the City of New Bedford distribution system is capable of meeting system requirements. (The primary demand of site potable water is the off-gas treatment system for the incinerator. Potable water demand varies greatly depending upon choice of mobile incinerator.) In addition, for flows of greater than 75,000 gpd, the local regulations require on-site storage of two days volume. A waiver from the on-site storage requirement can be obtained by

petitioning the New Bedford Water Board for review at their monthly meeting.

The average potable water use at the site is estimated at 50 gpm. This accounts for scrubber water requirements of the incinerator, miscellaneous process water and sanitary waters. Therefore, on-site storage facilities are not expected to be required for the site.

3.3.3 Electrical

A transformer is located on a pole at the corner of Belleville Avenue and Sawyer Street. The USACE-NED (New England Division) indicated that 480 volt, 30 amps was drawn from this transformer during the pilot study, which represents the available capacity of this unit.

The utility providing service (Commonwealth Electric Company) indicates that a large temporary transformer will be required for the electrical service required for the site. (Allowing for various configurations of equipment, the required service will either be 5 kV or 13.2 kV.) The Remediation Contractor will be responsible for coordinating the installation and hookups to this transformer for all site electrical equipment. The electrical utility will be made aware of the sites electrical requirements as they are finalized by the Remediation Contractor, as it may take up to six (6) months to order the proper transformer and arrange for connecting service for the site. However, based on the current estimates of electrical demands and equipment available, the utility should be able to provide service in a shorter timeframe.

3.3.4 Telephone

During the pilot study only two telephone lines were available from the existing telephone circuits. The telephone company has assured ERM that sufficient service (greater than 10 lines) is available for any service that may be required for the site. The Remediation Contractor will be responsible for coordinating telephone hookups.

3.3.5 Natural Gas

A natural gas service is available at the site capable of meeting the estimated peak 12,000 CFH service required for the incinerator. The local regulations and restrictions concerning natural gas connections and service will be observed. Lead times required to install the gas service will require the selected Remediation Contractor to coordinate with the utility soon after contract award to ensure that the service is installed in a timely fashion. Natural gas usage will depend on the incineration equipment selected.

3.3.6 Transportation

Conversations with the Massachusetts Department of Transportation and the New Bedford Department of Transportation indicates that traffic configurations and existing roads are capable of handling the anticipated additional traffic, including truck flow.

The Pilot Study Cove Area is located in the flight path of the New Bedford Municipal Airport. However, it is sufficiently removed from the airport that any height restriction should not impact placement or design of the incinerator with the exception that if the stack is greater than 200 feet, lighting must be provided on the stack.

SECTION 4.0

TREATABILITY STUDIES

4.1 Introduction

This section presents a summary of previous sediment handling alternatives, the previous treatability studies conducted on the wastewater treatment process, further wastewater treatability study work completed by ERM, and the test burn conducted by Risk Reduction Engineering Laboratory (RREL) on the sediment material.

4.2 Summary of Previous Studies

The USACE conducted extensive studies on upper estuary sediments to support the remedy. The objectives of these studies, referred to as the USACE "Engineering Feasibility Study" (EFS), were to:

- Develop baseline characterization of the Upper Estuary with the degree of detail needed to evaluate the engineering feasibility of the proposed dredging and disposal alternatives.

- Assess the magnitude and migration potential of contaminant releases due to resuspension of sediments during proposed dredging.

- Perform laboratory and bench-scale testing developed specifically for dredged material to gather technical data needed for predicting the behavior of the dredged sediments if placed in the disposal environments under consideration.

- Combine the technically feasible dredging and disposal technologies into implementation alternatives and provide concept design cost estimates for each alternative.

The results of the EFS were presented in a series of twelve reports prepared by the USACE's Waterways Experiment Station (WES) and New England Division (NED). The pertinent results from those reports are discussed below.

4.2.1 Settleability Tests

Previous laboratory investigations conducted as part of the USACE "Engineering Feasibility Study" for this project included modified water column tests for Hot Spots sediments. These tests indicated that removal of suspended solids in the wastewater stream will substantially reduce metal and PCB contamination in the water column. However, the dissolved PCB concentrations in the water column indicated that further treatment will be required to remove PCB concentrations to acceptable levels prior to discharging it back into the Harbor.

4.2.2 Flocculation/Filtration Tests

Additional tests by the WES were performed to evaluate the performance of flocculation and filtration of elutriate samples and resulting PCB removal rates. Previous studies evaluated the treatability of elutriate from dewatered sediments in non-Hot Spot areas using various synthetic polymers. These studies indicated that Magnifloc 1596C was a promising polymer. However, these studies did not evaluate use of inorganic coagulants (e.g., lime, alum, etc.) and did not consider elutriate from the Hot Spots material.

Whole effluent toxicity was also monitored during these tests. The toxicity testing results indicate that residual Magnifloc 1596C polymer in the waste stream, after dosing the elutriate at a concentration of approximately 10 ppm, was toxic to Champia Parvula (Algal Reproduction Test) above 6% effluent and Arbacia Punculata (Sea Urchin Sperm Cell Test) above 5% effluent.

4.2.3 Carbon Adsorption/UV Oxidation

A pilot-scale activated carbon system and an ultraviolet (UV)/oxidation (hydrogen peroxide) system were also evaluated. Activated carbon adsorption isotherms generated (by WES) for PCBs during the pilot scale studies demonstrated the effectiveness of activated carbon for removal of soluble PCBs. The pilot scale UV/oxidation system also indicated effective destruction of soluble PCBs. However, overall PCB removal efficiencies for both of these systems were poor. The performance of both the pilot study activated carbon and the UV/oxidation systems were hindered by the elevated suspended solids concentrations of the wastewater. The elevated suspended solids (with associated adsorbed PCBs) allowed dissolved PCBs to pass untreated with the particulate matter.

4.2.4 Outstanding Issues

Based on the results of the previous studies, the following questions were raised pertaining to the proposed treatment system:

- Would an inorganic chemical be more efficient at removing suspended solids?
- What would be the settling characteristics of this material?
- Could the suspended solids concentrations of the wastewater be better controlled?
- Would the performance of the carbon adsorption and UV/oxidation systems be improved with better suspended solids control?
- Which polishing system (carbon adsorption or UV/oxidation) would be more effective at achieving effluent goals?

4.3 ERM Treatability Study

Additional treatability studies were performed by ERM to develop the design basis for the wastewater treatment system. These studies included evaluating sediment settling, flocculation, filtration, carbon adsorption and UV/oxidation systems. Detailed discussions of the additional studies are presented in Appendix A, with the results of the ERM studies summarized below.

4.3.1 Primary Settling - Cell No. 1

Based on the treatability studies, the following items must be considered in the design:

- Floating oil and debris will form at the surface of the wastewater. During the treatability study a sheen of oil and other debris (leaves, etc.) were present. The results of analysis performed during parallel studies by the USACE-NED/WES indicate this oily sheen has elevated concentrations of PCBs.

- The dredged sediment material settled within six hours to a minimum elutriate suspended solids concentration of approximately 250 mg/l.

- The solids that settled in the CDF will separate with a clean interface. Therefore, solids carryover from the settled sediments should not represent a significant problem, provided the overflow weir is designed to minimize entrance velocities.

4.3.2 Equalization - Cell No. 2

The wastewater entering the equalization tank (Cell No. 2) will, based on the treatability studies, have the following characteristics:

- The suspended solids concentration should range between 250 to 600 mg/l.

4.3.3 Chemical Addition/Flocculation

The treatability studies indicated that the following chemical and flocculation treatment is recommended:

- Alum will be dosed at 25 ppm (as aluminum sulfate) to coagulate suspended solids and remove dissolved metals.

- Magnifloc 1596C, dosed at between 10 and 100 ppm, enhances flocculation of the coagulated material. This polymer may be added after rapid mixing of the inorganic coagulant (alum), but prior to the flocculation tank, if it is deemed necessary to optimize operating parameters.

- Flocculation of 15 minutes is required to maximize flocculation of smaller coagulated particles.

- A portion of the flocculated material will form particles of sufficient size that they may settle in the flocculation tank under slow mixing conditions. The flocculation tank should be provided with an underdrain or other options for solids removal under these conditions. An alternative is to increase the slow mixing rate to keep the solid in suspension for removal in Cell No. 3 (secondary settling). Solids settled in the flocculation tank should be transferred to Cell No. 1 to be treated with the other solids.

4.3.4 Secondary Settling - Cell No. 3

Results of the treatability study indicate the treatment system should be designed for:

- The secondary settling cell should have a minimum 15 minutes detention time.

- The secondary clarifier could achieve very low suspended solids concentrations (below 10 mg/l).

4.3.5 Filtration

To ensure the removal of suspended solids, as well as remove iron in the form of ferric hydroxide, the wastewater should pass through two sets of filters. The filters will be designed as follows:

- A prefilter consisting of a continuous backwash sand filter to remove solids down to 10 microns (nominal size).

- Polishing filters will follow the sand filter to remove particulate matter to 2.5 microns (nominal size). The polishing filters will be cartridge filters with two units in parallel. The polishing filters remove suspended solids concentrations to below 5 mg/l. The spent polishing filter cartridges will be incinerated on-site with the other miscellaneous solid wastes after incineration of the bottom sediments.

4.3.6 UV/Oxidation

Treatability studies for the UV/oxidation system were performed by Peroxidation Systems Inc. Their summary report is included as Appendix B. Summary of their findings are presented below:

- Removal of iron prior to the UV/oxidation system will be required to ensure the iron does not precipitate and foul the UV quartz tubes. Hydrogen peroxide addition upstream of the filters should be incorporated into the design to oxidize the iron to ferric hydroxide for removal by filtration.

- UV/oxidation can successfully remove PCB concentrations in the wastewater to very low concentrations (below detection limits) provided suspended solids removal is incorporated into the design.

The treatability study by Peroxidation Systems Inc. (PSI) was conducted with a laboratory detection limit of 5.0 ppb. PSI used PCB data above the detection limit which was then extrapolated to determine detention times necessary to achieve the required PCB removal efficiencies for the full scale unit. This, in combination with their past experience at treating PCBs in wastewaters, was used to develop the expected performance of the system.

4.3.7 Polymer Removal

Additional studies were performed to assess the ability of the process units downstream of the flocculation chamber and settling basin to remove polymer from the waste stream. Removal of trace concentrations of the polymer will be required to limit the toxicity of the wastewater. (Polymer addition facilities are being incorporated into the design, however, polymer will only be added if necessary to reduce suspended solids concentrations due to poor settling performance of the alum sludge.) Previous studies indicate that the wastewater when dosed with *Magnifloc 1596C* at approximately 10 ppm would be considered toxic to marine biota when diluted less than 20 times. (Effluent dilution calculations indicate that approximately 50 times can be expected. However, Massachusetts does not recognize a dilution zone and would typically require acute toxicity of less than 1 unit at the outfall. Refer to Appendix E for additional information.) Polymer will be added (if required) in the flocculation

chamber to enhance settling of the alum flocculation. Therefore, a majority of the polymer will partition to the solids that are removed in the secondary settling basin (Cell No. 3). Additional polymer will be removed with the solids during the filtration process. Tests were performed to determine the effectiveness of the UV/oxidation unit at oxidizing the polymer. These tests indicate that the polymer is removed at a rate of:

$$[\mathrm{Ln}\ (C_i/C_o)]/T=0.36$$

where:

C_o=Concentration of polymer out of the UV/oxidation unit (ppm)
C_i=Concentration of polymer into to the UV/oxidation unit (ppm)
T= UV unit detention time (min.)

The UV unit required for removal of the anticipated PCB concentration has a detention time of 1.4 minutes. Based on the above relationship, the effluent concentration of Magnifloc 1596C is equal to 60% of the influent concentration. The removal efficiency in the UV/oxidation unit is substantially less for the polymer than for PCBs. Previous studies have indicated the PCB effluent concentration is approximately 0.3% of the influent concentrations under the same operating conditions.

4.3.8 Summary

A review of the wastewater treatability studies results indicates that the most effective removal of PCBs and metals from the wastewater would be obtained when treated by:

- Settling of dredge solids in the CDF (Cell No. 1).
- Equalization of the wastewater from Cell No. 1 in Cell No. 2.

- Flocculation of suspended solids using alum dosed at 25 ppm (as aluminum sulfate) with Magnifloc 1596C added between 10 to 100 ppm to enhance settling, if needed.

- Secondary settling of the wastewater in Cell No. 3.

- Hydrogen peroxide addition to oxidize iron to the ferric state.

- Filtration using a sand filter (nominal size 10 micron removed).

- Polishing filters (nominal size 2.5 micron removed).

- UV/Hydrogen Peroxide.

A summary of the results of the treatability study are presented in Table 4-1. This table provides a summary of the concentration of the various constituents of concern at different steps throughout the treatment train based on the optimized treatability study results.

Visual observations of the Hot Spots sediment drums and wastewater during the flocculation tests indicate that a skimmer type device will be required in the initial settling chamber (Cell No. 1) to remove floating debris and oily residue generated during the dredging of the sediment material.

Settling tests indicate that a majority of the suspended solids in the dredge discharge settle during the first hour and the total suspended solids (TSS) of the wastewater concentration reaches a minimum of approximately 250 ppm after six hours. The tests also indicate that alum, at a dosing rate of approximately 25 ppm (as aluminum sulfate), is the most appropriate flocculant at removing the suspended solids and soluble metals from the elutriate samples. A plot of the remaining TSS concentrations vs. the coagulants used is presented as Figure 4-1. Data presented in Figure 4-1 indicates that the most effective flocculants are ferric chloride and alum.

TABLE 4-1

SUMMARY OF TREATABILITY STUDY RESULTS

	Initial Concentration (1)	Elutriate Concentration (2)	Settled Wastewater (3)	Filtered Wastewater (4)	Polished Wastewater (5)
PCB Decant (ppb)	26,000	810	320-222	127.5-73	<0.6
PCB Shaken (ppb)	-	49,000-16,800	2,800	127.5-73	<0.6
Cadmium (ppb)	3,080	17-9	5	5	-
Chromium (ppb)	7,340	264-200	11-6	6	-
Copper (ppb)	68,600	754-661	17-3	7-3	-
Lead (ppb)	38,100	783-690	17-7.1	4-2	-
Nickel (ppb)	6,270	730-150	23-18	22-13	-
Zinc (ppb)	17,600	2,230-1,940	76-51	74-45	-
Aluminum (ppb)	-	10,600-10,100	1,070-846	126	-
Iron (ppm)	-	41.2-39.7	-	12	2
PAH (ppb)	23	6-3	4	ND	-
TSS (ppm)	64,840	604-525	49-5	9	-
Alkalinity (ppm)	368	232-224	192-168	176-102	-
TDS (ppm)	-	-	25,651-25,507	25,009-25,243	-

(1) Concentration in drums as material received from site (ie. one third sediment, two thirds water).
(2) Concentration range in elutriate drum after mixing drums and 7 hours of settling.
(3) Concentration range of wastewater that was dosed with 25 ppm flocculant (as aluminum sulfate).
(4) Concentration range of filtered wastewater (2.5 micron filter).
(5) Concentration of wastewater treated with UV/Oxidation system.

The ERM Group

FIGURE 4-1
TSS CONCENTRATIONS IN CLARIFIED SAMPLES

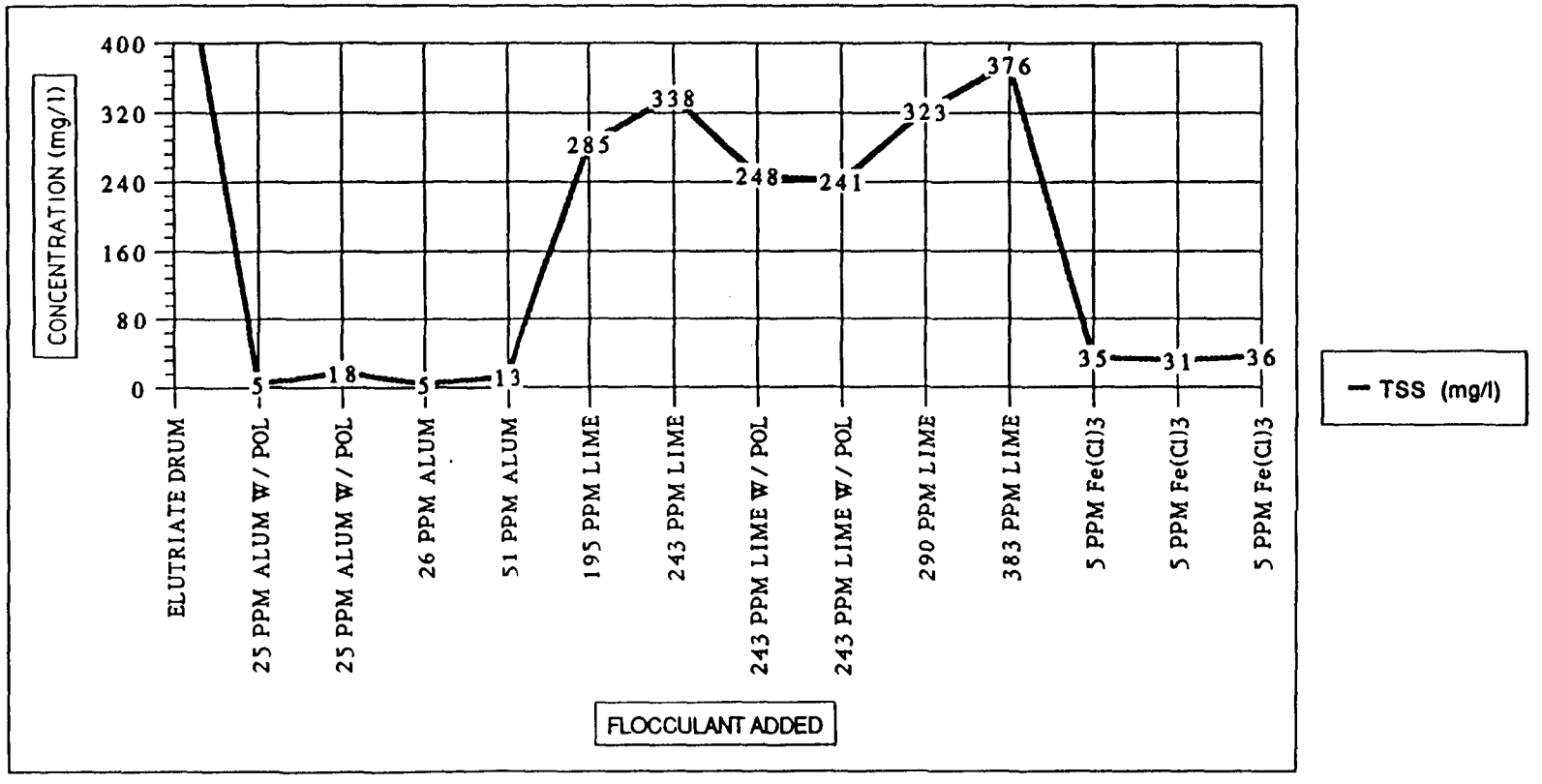

The ERM Group

Iron containing compounds (ferric chloride) should be avoided as dissolved iron in the water will, when oxidized, precipitate on the quartz tubes of the UV/oxidation equipment. Precipitation of iron on the quartz tubes will reduce the effectiveness of these units and increase maintenance.

Filtration test results indicate that the 2.5 micron filter is effective at further removing PCBs and suspended solids from the wastewater, but that a prefilter will be required upstream of the polishing filter. During the removal of solids from the wastewater, the 2.5 micron filter clogged after passing approximately 1,300 mls. For this reason it is recommended that a sand filter be used prior to the polishing filter to reduce the loading on the polishing filters. The sand filter would also be capable of controlling suspended solid surges that might result from operational upsets in Cell No. 3.

The carbon adsorption isotherm prepared from the treatability study data indicates that carbon adsorption is not efficient at removing PCBs to discharge levels from this wastewater. As indicated in Figure 4-2, the ERM generated isotherm has few points that overlap with the EPA generated isotherms (source EPA-600/8-80-023 Carbon Adsorption Isotherms for Toxic Organics). The ERM isotherm indicates that substantially greater amounts of activated carbon will be required to achieve PCB reductions in the wastewater as the PCB concentration decreases. At first, this would seem to contradict the isotherms generated by EPA and USACE-WES. However, it is important to understand the different conditions under which these isotherms were generated. The EPA and USACE-WES isotherms were generated using waters with only soluble PCBs. Therefore, the affinity of the PCBs to partition to the solid phase (i.e. activated carbon) was not hindered by PCBs adhering to particulate matter in the water. The ERM generated isotherm was developed using wastewaters available from the treatability studies. These wastewaters contained some particulate matter even at the low suspended solids concentrations achieved by filtration. The PCBs that adhere to the particulate (colloidal) material in the treatability wastewater resulted in shifting of the partitioning coefficient. Therefore, greater amounts of activated carbon would be

FIGURE 4-2
CARBON ISOTHERM

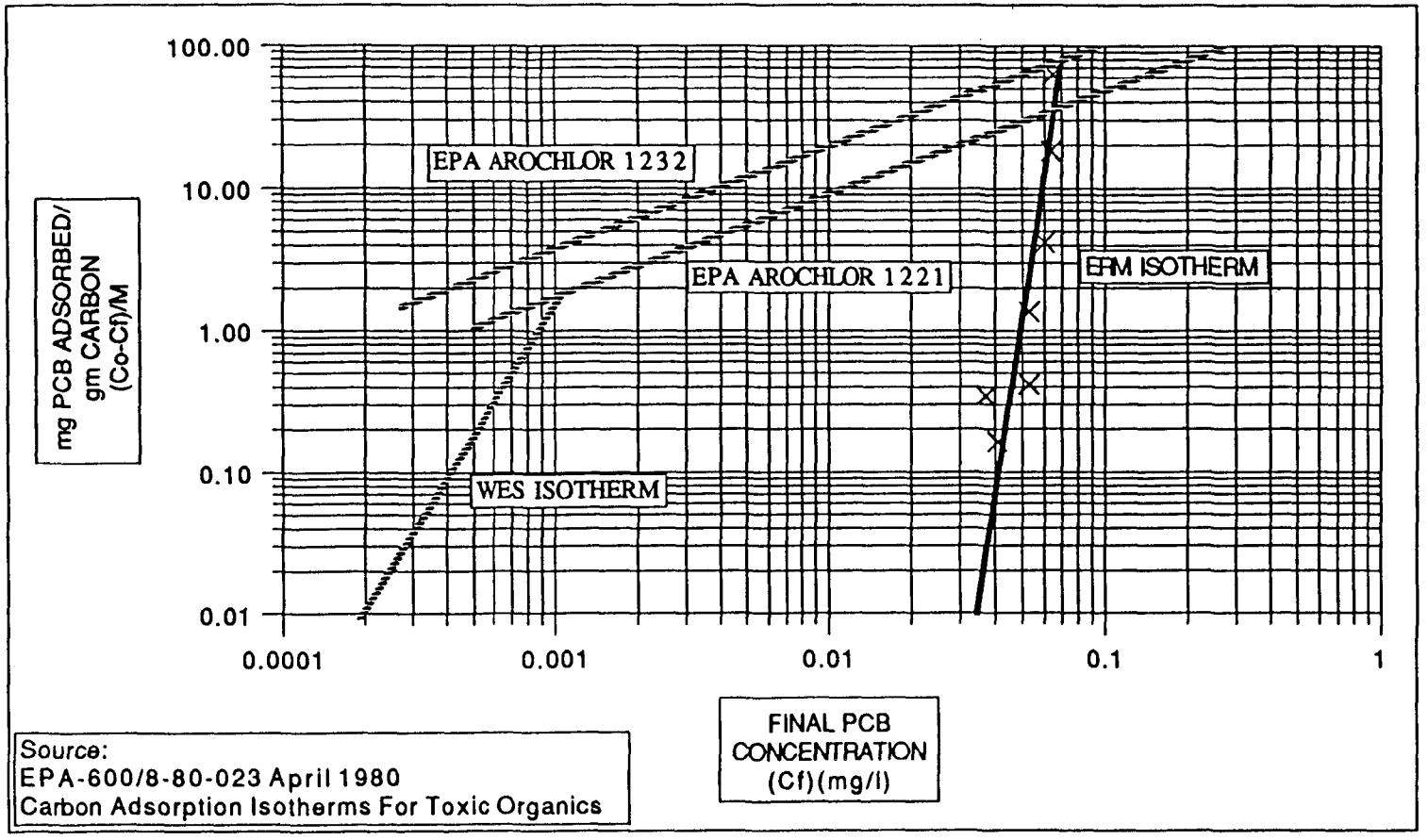

Source:
EPA-600/8-80-023 April 1980
Carbon Adsorption Isotherms For Toxic Organics

The ERM Group

required for the Hot Spots wastewaters to achieve the effluent limits. This conclusion is supported by analyzing duplicate PCB samples from the carbon isotherm tests and having one set of samples shaken and decanted prior to analysis. The other set of samples were not shaken prior to analysis. The difference in PCB concentrations between the duplicate samples indicate that a small portion of the PCBs are settling with the fine solids, while the samples are stored in the laboratory awaiting analysis.

The UV/oxidation system evaluation indicates this system will be effective at reducing PCB concentrations to below detection limits provided the suspended solids concentrations are controlled. The initial sample forwarded to Peroxidation Systems contained PCB concentrations of 81.9 ppb. At their testing facility, it was observed that additional precipitation had occurred while the samples were in transit. Further, it was determined that iron might be present due to a slight rust color of the samples. Hydrogen peroxide was added to oxidize the iron and the sample was filtered through a 5.0 micron filter to remove any precipitate. After this procedure, iron concentration was reduced to an acceptable level of approximately 2 ppm and the PCB concentrations were reduced to approximately 57 ppb. The wastewater sample was then treated using the UV/oxidation unit and the concentration of PCBs were reduced to below detection limits (5 ppb) in under three minutes. As discussed previously, Peroxidation Systems used this data and their previous PCB experience to determine that the PCBs in the wastewater (both soluble and particulate) can be treated to the required effluent limits using UV/hydrogen peroxide treatment.

4.4 Test Burn

An incinerator test burn of Hot Spots PCB-contaminated sediment was performed to determine the following:

- Confirm the destruction of organic contaminants in the sediments to the required 99.9999 percent destruction and removal efficiency (DRE) for PCBs.

- Determine the distribution of cadmium (Cd), chromium (Cr), lead (Pb) and copper (Cu) in the sediments, blowdown, and flue gas during incineration.

- Determine the effects of excess air and temperature on organic destruction and metal distribution including their leachability from the incinerator ash.

- Measure the effectiveness of the air pollution control system for collecting particulates and trace metals.

- Determine if the incinerator ash passes the TCLP test without the need for solidification/stabilization.

A test burn plan (Test Plan for Evaluating the Incinerability of the New Bedford Harbor/Hot Spot Operable Unit Sediment, February 1991, Revision 3) was prepared by Acurex Corporation for EPA's Risk Reduction Engineering Laboratory (RREL) (refer to Appendix C) which proposed a series of test burns of the Hot Spots sediments to ensure that the PCB-contaminated material could achieve the appropriate levels of treatment.

Sediment samples were collected during the period from December 17 to 20, 1990 by Normandean Associates as subcontractor for USACE-NED. Sediment was packed into eight 30-gallon drums for shipment to the Acurex Corporation incinerator in Jefferson, Arkansas. The test burn was performed during the period from March 13 through 21, 1991. Based on the test burn plan, incineration of the sediment material was analyzed at three test conditions.

Test Condition	Kiln Exit Temperature (°F)	After Burner Exit Temperature (°F)	Kiln Exit O_2 Level (%)
1	1,500	2,200	6
2	1,800	2,200	6
3	1,800	2,200	10

Samples were collected to determine the effectiveness of incineration at various operating conditions. Duplicate samples of the ash material were collected and forwarded to the Corps of Engineers, Missouri River Divisions (CEMRD) Laboratory to be TCLP tested for the eight RCRA metals. The results of the three analyses of the ash samples from the above test conditions indicated the ash material is not a hazardous waste. Therefore, the ash material can be disposed on-site in the CDF without stabilization/solidification. The results of the TCLP analysis indicates that the lead (Pb) concentration is extremely low (below 0.3 ppm) when compared with the levels measured in the Hot Spot estuary sediments (1,000 ppm). It is anticipated that the lead will be found in the fly ash material. It is likely that the fly ash material will therefore fail the TCLP analysis requiring the fly ash material to be stabilized prior to placement in the CDF. The test burn report prepared by the USEPA-RREL and the Acurex Corporation is included as Appendix D. In addition, TCLP analytical results performed by the USACE-Omaha on ash material generated during the test burn is also provided.

The test burn report provides the following information about the waste characteristics and behavior:

- ultimate chemical analysis,
- heating values,
- density,
- ash sample for TCLP testing,
- handleability of waste and ash material, and
- nuances unique to the sediment.

The test burn plan also provides general information correlating the operating parameters of the Acurex system with destruction efficiencies, collection efficiencies for the particular pollution control system used by Acurex during the test burn, auxiliary energy requirements of the PCB sediment material feed to the Acurex incinerator, and other "datum plane" type information.

However, it should be noted that the test burn results are not indicative of the specific operating parameters or efficiencies of the full scale incinerator used on the New Bedford Hot Spots sediments. Specifically, the trial burn plan will document that the full scale incinerator is capable of:

- achieving the required 99.999% DRE for PCBs,
- having sufficient detention time for sediments to achieve the DRE,
- having sufficient off-gas controls to achieve air discharge limits, and
- providing information on the required operating parameters of the full scale system to achieve these limits.

SECTION 5.0

APPLICABLE OR RELEVANT AND APPROPRIATE REQUIREMENTS

5.1 Background and Overview of ARARs

In 1980, Congress passed the Comprehensive Environmental Response Compensation and Liability Act (CERCLA) or Superfund, as it is more commonly known, to address abandoned hazardous waste sites and past waste disposal problems like New Bedford Harbor. Although the Superfund law contains a number of procedures that are followed to study and clean up waste disposal sites, the law does not provide specific cleanup standards or directions on how cleanup work should be conducted. Instead, Superfund relies on other environmental laws, such as the Resource Conservation and Recovery Act and the Clean Water Act, to provide these standards.

All Superfund cleanup work must attain the requirements set forth under other environmental laws (unless waived by EPA) that are either applicable or relevant and appropriate to the cleanup. These applicable or relevant and appropriate requirements are called ARARs for short.

For the New Bedford Harbor Cleanup, EPA determined that the following federal and state environmental laws and regulations are ARARs:

Federal ARARs

Toxic Substances Control Act (TSCA)
Resource Conservation and Recovery Act (RCRA)
Clean Air Act (CAA)
Clean Water Act (CWA)
Executive Order 11988 (Floodplain Management)
Executive Order 11990 (Protection of Wetlands)
Occupational Safety and Health Administration (OSHA)

State ARARs

301 CMR 20.00	Coastal Zone Management
310 CMR 6.00	Ambient Air Quality Standards
310 CMR 7.00	Air Pollution Control Regulations
310 CMR 10.00	Wetlands Protection Requirements
310 CMR 19.00	Solid Waste Management Requirements
310 CMR 30.00	Hazardous Waste Management Requirements
310 CMR 33.00	Employee and Community Right-To-Know Requirements
314 CMR 3.00	Surface Water Discharge Permit Program
314 CMR 4.00	Surface Water Quality Standards
314 CMR 9.00	Certification for Dredging and Filling
314 CMR 12.00	Wastewater Treatment

For the Hot Spots remediation design, ERM reviewed each of the ARARs listed above to ensure that the requirements they contain are considered in the design and that the cleanup will be implemented to attain them. Outlined below in this section is a brief overview of each ARAR. This is followed by a detailed discussion of how the ARARs will be attained for each of the cleanup unit operations.

5.1.1 Toxic Substances Control Act

The Toxic Substances Control Act (TSCA) provides requirements for testing new chemical substances and controlling chemicals that pose imminent hazards, including recordkeeping and reporting requirements. These requirements include standards for using and disposing of PCBs. For the Hot Spots remediation, TSCA gives specific standards for the design and operation of the incinerator and other PCB handling and disposal operations. TSCA, along with the RCRA regulations, provides most of the ARARs the cleanup must be designed to attain.

5.1.2 Resource Conservation and Recovery Act

The Resource Conservation and Recovery Act (RCRA) provides standards for the treatment, storage and disposal of hazardous wastes. For the Hot Spots remediation, RCRA provides standards for the design and operation of the incinerator and a number of other general facility standards for the operation of the treatment systems. Also, because Massachusetts is authorized to administer the RCRA program, the state regulations will be followed and provide the hazardous waste ARARs for the design.

5.1.3 Clean Air Act

The Clean Air Act (CAA) gives National Ambient Air Quality Standards (NAAQS), National Emission Standards for Hazardous Air Pollutants (NESHAPs) and New Source Performance Standards (NSPS).

The NAAQS apply to major stationary emission sources that have the potential to emit 100 tons per year or more. Because the Hot Spots incinerator will not have these potential emissions, the NAAQS are not applicable. However, the ambient standard for lead is relevant and appropriate, and will be addressed.

The materials regulated under the NESHAPs will not be emitted by the Hot Spots incinerator. Consequently, NESHAPs are not ARARs.

There is a NSPS that limits particulate emissions to less than 0.08 grains per dry standard cubic foot for incinerators. However, this standard applies to incinerators burning at least 50% municipal-type waste and, consequently, is not an ARAR. Also, the RCRA standards for hazardous waste incinerators that are ARARs for the cleanup require the same particulate emission limitation of 0.08 grains per dry standard cubic foot.

5.1.4 Clean Water Act

The Clean Water Act (CWA) gives guidelines and standards for wastewater discharges. For the Hot Spots remediation, the CWA gives a number of technology-based and water quality-based standards and criteria that must be attained by the treatment system handling the dredging supernatant, the supernatant from the dewatering and other wastewater streams.

5.1.5 Floodplain Management

The Floodplain's Presidential Executive Order (E.O. 11988) requires actions undertaken by federal agencies to reduce the risk of flood loss, to minimize the impact of floods and to restore and preserve the value of floodplains. For the Hot Spots remediation, this executive order requires that the dredging be conducted to minimize impacts to the floodplain. For other components of the remedy, this executive order does not provide any design-related standards that must be attained.

5.1.6 Wetlands Protection

The Wetland's Presidential Executive Order (E.O. 11980) requires that actions undertaken by federal agencies minimize the destruction, loss or degradation of wetlands and their value.

For the Hot Spots remediation, this executive order requires that the dredging be conducted to minimize loss and damage to wetlands. For other components of the cleanup, like the design of the incinerator and wastewater treatment systems, it provides no design-related standards that must be attained.

5.1.7 Occupational Safety and Health Administration

The Occupational Safety and Health Administration (OSHA) provides regulations that are applicable to hazardous waste remedial work. For the

Hot Spots remediation, a health and safety plan, and other provisions to ensure compliance with OSHA standards, will be implemented. Health and safety issues are discussed more fully in Section 7.0.

5.1.8 Massachusetts-Hazardous Waste Management Regulations

The Massachusetts Department of Environmental Protection (DEP) is authorized to administer the RCRA hazardous waste management program in Massachusetts. Consequently, these regulations will be addressed in the design and operation of the Hot Spots remediation.

5.1.9 Massachusetts-Solid Waste Management Regulations

These regulations provide the standards for managing and disposing of primarily municipal-type solid waste. For the Hot Spots remediation, these regulations will be considered in the design of the CDF for storage of treated sediments.

5.1.10 Massachusetts-Ambient Air Quality Standards

These standards define safe ambient levels of air quality for sulfur oxides, particulates, carbon monoxide, ozone, nitrogen dioxide and lead. For the Hot Spots remediation, these standards do not provide requirements that must be considered in the design of the incinerator. Although these standards are ARARs, the incinerator will be designed and operated in accordance with more stringent standards required by the Massachusetts Air Pollution Control Regulations and TSCA requirements.

5.1.11 Massachusetts-Air Pollution Control Regulations

These regulations provide the permitting and performance standards that air emission sources must attain. These regulations also include specific standards for hazardous waste incinerators that are similar to the RCRA 40 CFR 264 Subpart 0 requirements. For the Hot Spots remediation, the

incinerator and other operations will be designed and operated to attain these standards.

5.1.12 Massachusetts-Wetlands Protection Requirements

These regulations are promulgated under Wetlands Protection Laws and apply to dredging, filling, altering, or polluting inland wetlands. Work within 100 feet of a wetland is regulated under this requirement. The requirement also defines wetlands based on vegetation type and requires that effects on wetlands be mitigated.

Dredging in the wetland is required to remove the PCB-contaminated sediments. However, dredging will be performed to minimize impacts to wetlands to the extent practicable (i.e., water monitoring, silt curtains, operational controls to avoid resuspension of sediments and placement of absorbant booms around the dredge to collect floating oil). These requirements provide no other design-related requirements for other components of the remedy.

5.1.13 Massachusetts-Surface Water Quality Standards

These state standards incorporate the federal Ambient Water Quality Criteria (AWQC) as standards for surface waters in Massachusetts. For the Hot Spots remediation, the standards will be used to establish water-quality based design requirements for the wastewater treatment system.

5.1.14 Massachusetts-Certification for Dredging and Filling

These regulations are part of Massachusetts' coastal zone management program and provide standards for dredging, dredged material disposal and dredging operations in waters. For the Hot Spots remediation, these regulations will be addressed when designing dredging operations. However, they provide no other standards for the design and operation of other components of the cleanup like the incinerator or wastewater

treatment system except that water quality standards must be met, including anti-degredation provisions of those standards.

5.1.15 Massachusetts-Wastewater Treatment

These regulations provide standards to ensure the proper operation and maintenance of wastewater treatment systems. For the Hot Spots remediation, the wastewater treatment system will be operated and maintained in accordance with these regulations.

5.1.16 Massachusetts-Coastal Zone Management

These regulations are similar to the federal executive order for wetlands protection. Under these regulations, the destruction, loss, degradation and loss of value of wetlands must be minimized. These regulations, like the others for wetlands protection, provide no design-related standards that must be addressed for the incinerator or other components of the remedy.

5.1.17 Massachusetts-Employee and Community Right-to-Know

These regulations outline information requirements for hazardous substances including:

- emergency preparedness;
- providing information on hazardous chemicals to local officials; and
- making toxic chemical use instruction available to the public.

These regulations provide no standards that have to be incorporated into the design of the Hot Spots remediation. However, they will have to be addressed during implementation of the remediation by the Remediation Contractor.

5.2 Incineration ARARs

5.2.1 Introduction

This section summarizes the ARARs that provide design standards for the incinerator.

There are four sets of environmental regulations that provide ARARs that must be considered and incorporated into the design of the Hot Spots incinerator. These regulations are:

1. Federal TSCA Regulations for Incineration of PCBs
2. Massachusetts Hazardous Waste Regulations
3. Massachusetts Air Pollution Control Regulations
4. Federal and State Ambient Air Quality Standards

A discussion of each of these regulations is provided below and a summary of design-related requirements from these regulations is provided in Table 5-1.

5.2.2 TSCA Regulations For PCB Incineration

The Toxic Substances Control Act (TSCA) regulates the use and disposal of PCBs. The regulations for incinerating PCBs are provided in 40 CFR 761.70. These regulations contain most of the requirements that have to be considered in the design of the Hot Spots incinerator.

Section 761.70 contains four paragraphs. Paragraph (a) provides standards for incinerating liquid PCBs, Paragraph (b) provides standards for incinerating non-liquid PCBs, Paragraph (c) provides data and recordkeeping requirements, and finally, Paragraph (d) outlines the

TABLE 5-1
APPLICABLE OR RELEVANT AND APPROPRIATE REQUIREMENTS
FOR THE DESIGN OF THE NEW BEDFORD INCINERATOR

REQUIREMENT	REGULATION	SUMMARY
TSCA	40 CFR 761.70	TSCA regulates the use and disposal of PCBs, including incineration.
PCB Emission Limit	761.70(b)(1)	Emissions must be less than 0.001g/kg of PCBs fed to the incinerator (DRE of 99.9999%).
Combustion Efficiency	761.70(a)(2)	Combustion Efficiency must be greater than 99.9%.
Measuring PCB Feed Rate	761.70(a)(3)	The rate and quantity of PCBs must be measured and recorded at least every 15 minutes.
Temperature Measurements	761.70(a)(4)	Temperature must be continuously measured.
Stack Monitoring	761.70(a)(6)	When the incinerator is first used or is modified, monitor for the following: O2, CO2, Nitrogen Oxides, HCl, Total Chlorinated Organic Content, PCBs and Total Particulate Matter.
Stack Monitoring	761.70(a)(7)	Whenever the incinerator is operating, monitor O2 and CO continuously and CO2 periodically.
PCB Feed Cut-offs	761.70(a)(8)(i)	The feed of PCBs to the incinerator must be stopped if the stack monitoring system required by 761.70(a)(7) fails.
PCB Feed Cut-offs	761.70(a)(8)(ii)	The feed of PCBs to the incinerator must be stopped if the feed-rate monitoring system required by 761.70(a)(3) fails.
HCl Controls	761.70(a)(9)	Water scrubbers must be used for HCl control and the scrubber effluent must meet applicable effluent or pretreatment standards.
MA HAZARDOUS WASTE	310 CMR 30.00	The state hazardous waste regulations provide general facility standards that the incinerator must comply with. However, there are no design-related requirements.
MA AIR POLLUTION CONTROL REGULATIONS	310 CMR 7.00	The MA Air Pollution Control Regulations contain the RCRA performance requirements for incinerators.
Particulate Emission Limit	7.08(1)(g)	No particles with a diameter greater than 100 microns may be emitted.

The ERM Group

TABLE 5-1 (cont.)
APPLICABLE OR RELEVANT AND APPROPRIATE REQUIREMENTS
FOR THE DESIGN OF THE NEW BEDFORD INCINERATOR

REQUIREMENT	REGULATION	SUMMARY
Hazardous Waste Emission Limits	7.08(4)(h)	The incinerator must be designed to meet the following limitations: 1. DRE of 99.99% for POHCs. 2. HCl must be less than 4 lbs per hour or 1% of the HCl prior to control. 3. Particulate emissions must be less than 0.08 grains per dry standard cubic foot. 4. PIC emissions must be limited to not result in "a condition of air pollution."
Monitoring Requirements	7.08(4)(k)	The incinerator must be designed to meet the following monitoring requirements: 1. Carbon monoxide and oxygen in the stack exhaust. 2. Waste feed and supplemental fuel rates. 3. Combustion temperature. 4. Combustion gas velocity.
Operating Requirements to Control Fugitive Emissions	7.08(4)(l)	Fugitive emissions must be controlled by either: sealing the combustion zone or maintaining low pressure.
PAH Emission Limitation	7.08(4)(m)	Polyhalogenated aromatic hydrocarbons (PAHs) must have a DRE of at least 99.9999%.

The ERM Group

requirements for EPA's approval. This last paragraph also includes information on trial burns.

For the design of the Hot Spots incinerator, because non-liquid PCB contaminated sediments will be burned, the standards in Paragraph 761.70(b) must be followed. In accordance with 761.70(b), the following requirements apply to the design and operation of the incinerator:

1. The mass air emissions from the incinerator shall be no greater than 0.001g PCB/kg of the PCB introduced into the incinerator. (Destruction and Removal Efficiency or DRE of 99.9999 percent.)

2. Combustion efficiency shall be at least 99.9 percent computed as follows:

   Combustion Efficiency = $[C_{CO_2}/(C_{CO_2}+C_{CO})]100$
   where:
   C_{CO_2} = Concentration of carbon dioxide.
   C_{CO} = Concentration of carbon monoxide.

3. The rate and quantity of PCBs which are fed to the combustion system shall be measured and recorded at regular intervals of no longer than 15 minutes. (The Remediation Contractor will meet this requirement by first measuring the concentration of PCBs in the sediment by sampling and analyzing 12 core samples from the CDF and then by continuously monitoring the mass flow rate of sediments into the incinerator. The mass flow rate times the average PCB concentration of the sediment will provide the mass flow rate of PCBs into the incinerator.)

4. The temperatures of the incinerator shall be continuously measured and recorded. The combustion temperature of the incinerator shall be based on either direct (pyrometer) or indirect (wall thermocouple-pyrometer correlation) temperature readings.

5. Monitoring of stack emission products shall be conducted:

   (i) When an incinerator is first used to burn PCBs;

   (ii) When an incinerator is first used to burn PCBs after it has been modified in a manner which may affect the characteristics of the stack emission products; and

   (iii) At a minimum such monitoring shall be conducted for the following parameters:

   (a) Oxygen (O_2); (b) Carbon Monoxide (CO); (c) Carbon Dioxide (CO_2); (d) Oxides of Nitrogen (NO_x); (e) Hydrochloric Acid (HCl); (f) Total Chlorinated Organic Content (RCl); (g) PCBs; and (h) Total Particulate Matter.

6. At a minimum, monitoring and recording of combustion products and incineration operations shall be conducted for the following parameters whenever incinerating PCBs: (i) O_2; (ii) CO; and (iii) CO_2. The monitoring for O_2 and CO shall be continuous. The monitoring for CO_2 shall be periodic, at a frequency specified by EPA.

7. The flow of PCBs to the incinerator shall stop automatically when any one or more of the following conditions occur:

   (i) Failure of monitoring operations specified for O_2, CO and CO_2; or

   (ii) Failure of the PCB rate and quantity measuring and recording equipment.

8. Water scrubbers shall be used for HCl control during PCB incineration. Scrubber effluent shall be monitored and shall comply with applicable or pretreatment standards, and any

other state and federal laws and regulations. An alternate method of HCl control may be used if the alternate method has been approved by EPA.

5.2.3 Massachusetts Hazardous Waste Regulations

The Massachusetts DEP is authorized to administer the RCRA hazardous waste management program in Massachusetts. To receive this authorization, the DEP has demonstrated that its regulations are equivalent to, or more stringent than the federal standards. Consequently, complying with the Massachusetts' regulations will ensure federal compliance.

The Massachusetts regulations providing the ARARs for hazardous waste incineration are formatted differently than the federal standards. Instead of one set of federal regulations (40 CFR Part 264), the state requirements are provided in two different sets of regulations. The General Facility Standards that apply to all hazardous waste management facilities, including incinerators, are provided in the Hazardous Waste Regulations (310 CMR 30.00). The performance standards for incinerators, including the destruction and removal efficiency, emission limitations and other requirements, are provided in the Air Pollution Control Regulations (310 CMR 7.00).

As discussed above, the Massachusetts Hazardous Waste Regulations provide the General Facility Standards that an incinerator (and other cleanup operations) must meet. These include:

1.	General Waste Analysis	(310 CMR 30.513)
2.	Security	(310 CMR 30.514)
3.	General Inspection	(310 CMR 30.515)
4.	Personnel Training	(310 CMR 30.516)
5.	Contingency Planning and Emergency Procedures	(310 CMR 30.520 - 30.524)
6.	Closure Planning	(310 CMR 30.583)
7.	Post-Closure Planning	(310 CMR 30.593)

These standards contain no specific technical requirements that the incinerator must meet, or dictate how it should be designed. The standards do, however, provide a number of requirements that the Remediation Contractor will need to address (e.g., providing training for the incinerator operators). These general facility standards are discussed further in Section 5.6.

5.2.4 Massachusetts Air Pollution Control Regulations

Air Pollution Control Regulation

The RCRA standards for incinerators found in 40 CFR 264 Subpart O of the federal regulations are provided in Section 7.08 of the Massachusetts Air Pollution Control Regulations. Within the state regulations, the general requirements for all incinerators (7.08(1)) and the specific requirements for hazardous waste incinerators (7.08(4)) are addressed.

General Requirements for Incinerators

Section 7.08(1) provides a number of requirements that all incinerators must meet. However, there is only one technical requirement that needs to be addressed in the design. As required by 7.08(1)(g), no particles that have a dimension greater than 100 microns may be emitted. The other requirements in Section 7.08(1) are procedural and contain no design-related provisions.

Requirements for Hazardous Waste Incinerators

Additional requirements for hazardous waste incinerators are provided in Section 7.08(4). This section contains thirteen parts and is relatively complex. However, only four areas contain design-related requirements. The other nine parts contain permitting and DEP approval procedures and trial burn requirements. The four sections that contain design-related requirements are 7.08(4)(h), (k), (l), and (m). These are discussed below.

Section 7.08(4)(h) - Emission Limitations

As required by Section 7.08(4)(h), the incinerator must be designed to meet the following emissions limitations:

1. A DRE of 99.99% for Principal Organic Hazardous Constituents (POHCs) (The Remediation Contractor will be required to meet the more stringent TSCA DRE of 99.9999%.);

2. HCl emissions must be less than four (4) pounds per hour or 1% of the HCl in the combustion gas prior to air pollution controls (whichever is greater);

3. Particular emissions must not exceed 0.08 grains per dry standard cubic foot; and

4. Emissions of products of incomplete combustion (PICs) must be limited so they do not result in "a condition of air pollution."

Section 7.08(4)(k) - Monitoring Requirements

As required by Section 7.08(4)(k), the incinerator must be designed with the following instrumentation and monitoring:

1. Carbon monoxide and oxygen in the stack exhaust;

2. Waste feed and supplementary fuel rates;

3. Combustion temperature; and

4. Combustion gas velocity.

Section 7.08(4)(l) - Operating Requirements

Within this section, there are two operating requirements that will dictate how the incinerator is designed and operated. First, fugitive emissions from the combustion zone must be controlled by either:

1. Keeping the combustion zone totally sealed against fugitive emissions;

2. Maintaining a combustion zone pressure lower than atmospheric pressure; or

3. An alternative means approved by the DEP.

And second, the incinerator must be equipped with a waste feed cut-off and alarm system to stop operations when the incinerator is outside of its allowable operating limits.

Section 7.08(4)(m) - PAH Standards

As required by Section 7.08(4)(m), polyhalogenated aromatic hydrocarbons (PAHs) must have a DRE of at least 99.9999%. This is based on burning materials more difficult to burn than tetra-, penta- and hexachlorodibenzo-p-dioxins and dibenzofurans. (The Remediation Contractor will comply with this standard by demonstrating 99.9999% DRE for PCBs.)

5.2.5 Federal and State Ambient Air Quality Standards

The federal National Ambient Air Quality Standards (NAAQS) and the State Ambient Air Quality Standards (310 CMR 6.00) provide standards for sulfur oxides, particulates, carbon monoxide, ozone, nitrogen dioxide and lead. However, because of the type of wastes being incinerated, the small size of the unit and the stringent requirements that must be met under the TSCA and RCRA regulations, these standards will not necessitate additional

design provisions. The design will consider, however, the Massachusetts Threshold Effects Exposure Limits (TELs) and annual average Allowable Ambient Limits (AALs) for PCBs and metals (including the ambient standard for lead of 1.5 $\mu g/m^3$). It is expected that by attaining the RCRA particulate emission limit (0.08 grains per dry standard cubic foot), and the TSCA DRE requirement, the TELs and AALs will be achieved.

5.3 Wastewater Discharge ARARs

5.3.1 Introduction

This section defines ARARs for wastewater discharges. These include wastewaters from treatment of dredge slurry material, dewatering of settled sediment, scrubber blow-down from the incinerator, and storm water.

The Clean Water Act (CWA) and corresponding state regulations (314 CMR 2, 3, 4, 8 and 12) require that all point source wastewater discharges achieve technology-based treatment standards as a minimum level of treatment. In addition, water quality-based effluent limitations may be required if the technology-based treatment levels are not sufficient to achieve in-stream water quality standards. Typically, the water quality based treatment levels are more stringent, but this is not always the case.

The contaminants of concern identified in the ROD for this project include:

- PCBs
- Cadmium
- Chromium (+6)
- Copper
- Lead
- PAHs

Therefore, minimum technology-based treatment standards must be established to address the contaminants of concern. In addition, more

stringent treatment requirements would be required if the minimum technology-based treatment processes for removing these contaminants were not sufficient to assure that applicable in-stream water quality standards are achieved. The following subsections discuss compliance with these technology-based and water quality-based treatment requirements.

5.3.2 Technology-Based Treatment Requirements

The treatment standards for point source discharges are derived from Title III of the CWA, which requires all direct dischargers to meet technology-based treatment requirements. EPA has determined technology-based treatment requirements for various point source categories in a series of "Development Documents," which evaluate treatment processes for various industrial categories. The limits provided in these guidelines are transformed into specific effluent limitations by permit writers. However, EPA has not categorized all point discharges or prepared Development Documents or corresponding effluent limitations guidelines for them.

Because there are relatively few wastewater discharges from CERCLA sites and effluent streams from them cannot be readily categorized, EPA has not prepared Development Documents applicable to CERCLA sites. The effluent that will be generated from the Hot Spots wastewater treatment plant falls into this group.

In such cases where categorical technology-based treatment requirements have not been determined, EPA recommends that technology-based effluent limits be established on a case-by-case basis using Best Professional Judgement (BPJ). Effluent limits are established by BPJ in a two-step process. First, appropriate technologies to treat the wastewater are identified. And second, once these technologies are established, numerical technology-based effluent limitations are established by applying the expected levels of performance of the selected BPJ technologies.

Factors considered in setting BPJ technology-based effluent limitations include:

- performance data for similar treatment facilities and waste streams,
- performance data from treatability studies, and
- variability in pollutant concentration levels that may affect treatability.

For the Hot Spots wastewaters, detailed treatability studies have been performed using site-specific wastewaters. Therefore, results of these treatability studies provide the most realistic estimate of the anticipated capabilities of the selected unit processes.

The unit processes evaluated during treatability studies were based on the processes identified in the ROD and engineering judgement provided by ERM and potential equipment vendors. These processes reflect state-of-the-art treatment for addressing contaminants anticipated from the Hot Spots wastewater treatment plant. Other potential technologies were also evaluated in EPA's FS and during this design effort.

The sequence of unit processes recommended by the ERM treatability study included:

- primary settling
- flocculation
- secondary settling
- sand filtration
- secondary filtration

- UV/oxidation

The potential environmental and economic impacts of adding or deleting unit processes should also be considered in establishing appropriate BPJ effluent limitations. Less stringent effluent limitations would involve deletion of the final unit process (i.e., UV/oxidation) listed above in the process treatment train. However, deletion of this step is not recommended because it would result in a significantly lower quality effluent. On the other hand, more stringent treatment processes than those listed above are also not recommended.

As discussed above, the second step in defining BPJ technology-based effluent limitations involves determining the expected levels of performance of these technologies. Treatability studies were used to determine expected performance levels.

Treatability studies performed on the anticipated wastewater using the treatment system of settling, equalization, chemical filtration and UV/oxidation produced the following results:

Constituent Evaluated	Achievable Concentration (ug/l)
PCBs	<0.6 (detection limit)
PAHs	(detection limit)
Cadmium	5.0 (detection limit)
Chromium (+6)	6.0
Copper	7
Lead	4
Iron	2,000
Nickel	18
Zinc	74

[The constituents included in the previous table include the constituents of concern (PCBs, cadmium, PAHs, chromium, copper and lead) plus other

constituents (iron, nickel and zinc) that were identified during the treatability studies. These additional parameters include constituents controlled for operation needs (i.e., iron to limit fouling of the UV quartz tubes) in addition to other potential pollutants. The eighteen compounds that comprise PAHs were all found below their individual detection limits for treated effluent during the treatability study.]

These concentrations should be interpreted as representative of achievable Long Term Average (LTA) effluent concentrations. Since effluent concentrations vary depending on wastewater characteristics and flows, the LTA concentrations will be much less than those that could occur over shorter averaging periods (i.e. daily maximum or monthly averages). Therefore, the above values must be translated into corresponding values that could occur over shorter timeframes. This is necessary to determine concentrations to be used for monitoring permit compliance for daily and monthly timeframes, and to provide a consistent basis of comparison with allowable effluent concentrations needed to achieve water quality standards. (See discussion of water quality-based limitations in Section 5.3.3.)

EPA has performed extensive studies evaluating variability of wastewater discharges and the relationship to daily and monthly permit averaging periods. Procedures for accounting for this variability are provided in "Permit Writer's Guide to Water Quality-Based Permitting for Toxic Pollutants," (EPA, 1987).

Based on EPA's estimates of variability, the monthly average and daily maximum technology-based effluent limitations should be established as 1.19 and 2.13 times the above indicated values, respectively. These factors correspond to a 95th percentile level for 30 sampling events per month. Refer to Appendix E for additional information on how these calculations were performed.

5.3.3 Evaluation of Water Quality Based Treatment Requirements

This section presents an evaluation of the possible need for establishing water quality-based treatment requirements if they are more stringent than the technology-based limits provided above. This section addresses water quality-based limits with respect to individual contaminants as well as whole-effluent toxicity.

Individual Parameters

The evaluation of the possible need for water quality-based effluent limits on a parameter-specific basis involves comparing the effluent limit required to achieve in-stream water quality standards with the effluent concentration achievable based on the technology-based design described previously. A listing of acute and chronic water quality criteria for the contaminants of concern appears in Table 5-2. If the achievable effluent concentrations for a given parameter are less than the allowable effluent concentrations needed to achieve in-stream water quality criteria, the technology-based limits would be sufficient. If the achievable effluent limits are greater than the limits allowable for achieving in-stream water quality criteria, then treatment requirements more stringent than technology-based would be called for to assure that in-stream water quality standards are achieved.

Allowable effluent concentrations are determined by calculating the maximum concentrations that could occur in the discharge pipe that would permit the in-stream water quality criteria to be achieved after dilution with the receiving water. Dilution may be determined using a number of plume models; this analysis uses the most conservative plume model described in the "Technical Support Document for Water Quality-Based Toxics Control," (EPA, 1985, pg. 35).

This analysis assumes that one-tenth of the river width would be available for dilution flow, and that the effluent would be discharged through a 10-inch pipe into the main river channel. The dilution analysis must be

TABLE 5-2
ACUTE AND CHRONIC MARINE
WATER QUALITY CRITERIA
(all values in ppb)

PARAMETER	ACUTE CRITERION	CHRONIC CRITERION
PCBs	10	0.03
PAHs	---	---
Cd	43	9.30
Cr	1100	50.00
Cu	2.9	2.90
Pb	140	5.60
Fe(1)	1000	1000
Ni	75	8.30
Zn	95	86.00
TUa (2)	0.3	NA
TUc (3)	NA	1

NOTES:

(1) Criteria based on fresh water chronic; marine values not available.
(2) Acute toxicity units; TUa=100/LC50.
(3) Chronic toxicity units; TUc=100/NOEL.

References:
Quality Criteria for Water, 1976 "Red Book" and
Federal Register Publications

performed for both acute and chronic water quality criteria for each parameter.

The specific procedures and assumptions for calculating allowable effluent limits for specific parameters are contained in Appendix E. These procedures and assumptions are generally very conservative. Thus, it is probable that more representative parameters and assumptions would result in less water quality impact (and hence, greater allowable effluent limits).

A table showing resultant contaminant-specific allowable effluent limits in comparison with achievable effluent limits appears as Table 5-3. The information presented in Appendix E indicates that the achievable technology-based effluent concentrations for each parameter are significantly less than the allowable water quality effluent concentrations. Therefore, the technology-based effluent limitations should be used as the basis for establishing parameter-specific effluent limitations.

Evaluation of Potential Whole-Effluent Toxicity

The evaluation of whole-effluent toxicity involves determining the number of toxicity units (TU) that may be discharged without having an adverse impact on aquatic organisms. Whole effluent toxicity refers to the composite toxic impact of a discharge, rather than the toxicity of individual parameters. Acute and chronic toxicity units are defined as follows:

Acute toxicity (TUa) = $100/LC_{50}$
Chronic toxicity (TUc) = 100/NOEL

The LC_{50} and NOEL values in these equations are expressed as a percent effluent.

The MADEP recommended criterion to prevent acute toxicity effects is 0.3 TUa. This is based on an adjustment factor of one third used to extrapolate the LC_{50} to a LC_1 (concentration at which 1% of the test organism die). EPA

TABLE 5-3

Comparison of Achievable Effluent Concentrations, Water Quality Criteria and Ambient Background Concentrations
(all values presented in ppb)

Parameter	Anticipated Influent Wastewater Concentrations[1]	Method Detection Limit[2]	Projected Achievable Technology Based Treatment Concentrations[3] Long-Term Average	Monthly Average	Daily Maximum	Water Quality Criteria[4] Acute	Chronic	In Stream Background Concentrations[5]
ROD Identified Constituents								
PCBs	49,000		0.6	0.71(6)	1.3(6)	10	0.03	0.6
PAHs(7)	--		--	--	--	--	--	--
Chromium	264	6	ND (<6)	7.1	12.8	50	50	--
Cadium	17	3	ND (<5)	6	10.7	43.0	9.3	0.2
Copper	754	2	7	8.3	15	2.9	2.9	5.4
Lead	783	1	4	4.8	8.5	140	5.6	2.7
Other Constituents								
Nickel	730	13	18	21.4	38.3	75.0	8.3	--
Zinc	2,230	3	74	88.1	158	95.0	86.0	--
Iron	41,200	35	2,000	2,380	4,260	1,000	1,000	--
Aluminum	10,600	50	126	--	--	--	--	--

1 Based on wastewater used for the treatability studies generated from Hot Spots material and estuary waters.

2 Method detection limits are based on EPA CLP Method reporting requirements. In some instances, the instrument detection limit may be lower than the required method detection limit.

3 Achievable Technology Based Treatment Concentration were determined based on results of treatability studies of the proposed treatment system. Long-Term Average values are based on results of optimized treatability study treatment system. Monthly Average and Daily Maximum are 1.55 and 2.13 times Long-Term Average, respectively. Monthly Average and Daily Maximum values are based on procedures in EPA Permit Writer's Guide.

4 Water Quality Criteria were determined based on "Quality Criteria for Water," 1976 "Red Book" and 1986 Federal Register publications (Refer to Appendix D).

5 In stream background conditions are based on values presented in DEP's September 27, 1989 memo for waters north of the Coggeshall Street Bridge prior to pilot dredging study.

6 PCB permit limit based on measured concentrations of Aroclors 1242 and 1254 that comprise the 0.6 ppb background concentration.

7 PAHs to be treated to detection limits for the 18 compounds included under PAH classification.

The ERM Group

regulations allow compliance with this criterion incorporating the mixing zone. However, in order to ensure that this limit is achieved within a short distance of the effluent pipe, the MADEP has established an end-of-pipe limit of 1.0 TU for dilution factors greater than 100. MADEP criterion establishes that for discharges with dilutions between 10 and 100 times, the effluent limit is established at 1.0 TU. Further, in the dilution range between 20 and 100, chronic monitoring is not required. Calculations for the discharge from the wastewater treatment plant associated with the Hot Spots remediation indicate a dilution factor of 49.3. (Refer to Appendix E for additional information.) Therefore, for this outfall, acute monitoring would be the only constituent of concern.

Previous studies on the effluent (with the polymer Magnifloc 1596C) identified toxicity to Champia Parvula (Algal Reproductive Test) above 6% effluent and Arbacia Punculata (Sea Urchin Sperm Cell Test) above 5% effluent. Based on this information, the wastewater will not achieve effluent toxicity limits at the outfall if polymer is added to the system. (However, if dilution is allowed, the toxicity limit will be achieved at the edge of the dilution zone.)

The actual whole effluent toxicity of the wastewater (without polymer) is presently unknown and can only be established upon startup of the wastewater treatment system. However, the estimated duration of the wastewater discharge is expected to last no greater than six months. The wastewater will primarily be generated by dewatering of the dredge material and the only constituents of concern (related to toxicity) that would be expected in the effluent are the previously identified metals. These constituents will be removed to achieve technology limits based on the treatability studies performed in conjunction with this design.

Due to limited nature of this discharge and establishing discharge limits based on the treatability studies, whole effluent sampling will not be required for this remediation.

5.3.4 Storm Water, Dewatering and Blowdown Treatment Requirements

All storm water, dewatering flows, and blowdown will be captured and routed into the wastewater treatment system. Therefore, since there will be no separate point-source from these sources, treatment requirements for these sources are consistent with treatment requirements for the general facility, as described above.

5.3.5 Operation, Maintenance and Monitoring Requirements

This section describes operation and maintenance (O&M) and monitoring requirements applicable to the wastewater treatment facilities. Specific regulations pertaining to O&M and monitoring for these facilities are contained in 314 CMR 12.00. This section describes major requirements of this regulations as they pertain to these wastewater treatment facilities.

O & M Requirements

The operators of the wastewater treatment facilities must comply with "Rules And Regulations For Certification Of Operators Of Waste Water Treatment Facilities," contained in 257 CMR 2.00. The facility operator must also prepare an O&M manual containing information needed to properly operate and maintain the facility. This manual must include:

- Permits and Standards
- Description, Operation and Control of Wastewater Treatment Facility
- Description, Operation and Control of Sludge Handling Facilities
- Personnel
- Sampling and Laboratory Analysis

- Records and Reporting
- Maintenance
- Emergency, Operating and Response Program
- Safety
- Utilities

In addition, the operator must prepare a staffing plan containing a description of the number and qualifications of all personnel needed to properly operate the facility. This plan must include:

- Number of operational days per week.
- Number of operational hours per week.
- Number of shifts per day.
- Required personnel per shift.
- Saturday, Sunday and holiday staff coverage.
- Emergency operating personnel.

Safety Program

Self-contained compressed air masks and associated equipment must be inspected at least once every six months. The integrity of the tank must be inspected at least once every five years (i.e., once during the anticipated operation life of this facility). The facility must maintain at least one spare fully-charged cylinder of compressed air. At least one person on each shift must have an up-to-date certificate of training in first aid, and have immediate access to an approved first-aid kit.

Sampling and Analysis

Parameter Specific Monitoring Requirements

Individual parameters of concern listed previously should be monitored to evaluate compliance with discharge requirements on a monthly average and daily maximum basis. Sampling protocols must comply with the requirements of 40 CFR 136. The effluent limits specified previously assume four samples per month. Therefore, sampling should be performed a minimum of four times per month. A detailed sampling program is identified in Section 6.3.7.

Whole-Effluent Toxicity

The proposed wastewater treatment plant must be operational in order to obtain an accurate representation of the effluent toxicity of the treated wastewater. However, based on the calculations discussed previously under Section 5.3.3, the wastewater will have a dilution factor of approximately 49.3 (refer to Appendix E). Therefore, any wastewater exiting the discharge pipe will represent only approximately 2% effluent after dilution. Previous measurements of effluent toxicity indicate that toxicity from the polymer (Magnifloc 1596C) occurred at concentrations of approximately 5% effluent. Effluent toxicity is therefore anticipated to represent a discharge concern, if polymer is required to remove solids.

5.3.6 Recordkeeping and Reporting

The operator must maintain monthly operating records in accordance with DEP's publication titled, "Directions For Completing Monthly Report Form For Waste Water Treatment Plants." These records must be submitted to DEP by the tenth calendar day of the following month from which they were gathered. In addition, records of all monitoring information, including maintenance records and original strip chart recordings for continuous monitoring instrumentations and other reports shall be

maintained for at least three years from the date of the sample, measurement or report. However, as this facility will be operated pursuant to CERCLA requirements, specific permit requirements related to operation and reporting are waived. The Remediation Contractor will, however, be required to submit the appropriate information to the Contracting Officer with an information copy forwarded to the DEP.

5.3.7 Other Administrative Requirements

Since this facility will be constructed and operated pursuant to CERCLA requirements, specific permitting requirements for the facility construction and operation are waived. Nonetheless, administrative and substantive requirements of the CWA and state programs must be achieved.

In order to assure that these substantive requirements are achieved, the facility Remediation Contractor should complete a permit application form (Form 2C, 314 CMR Section 3.26). In addition, the Remediation Contractor should complete Form HW pursuant to 314 CMR 8.20 for submittal to the Contracting Officer. An information copy will be forwarded to the DEP of all transmitted information.

5.4 Ash Handling ARARs

5.4.1 Introduction

If the ash produced from incinerating the PCB-contaminated sediments is characteristically hazardous based on TCLP analysis, the ash will need to be stabilized to prevent metals from leaching prior to disposal in Cell No. 1. (TCLP tests on ash samples generated during the test burn indicate that the ash will likely not need to be stabilized. However, ash material, as well as fly ash material will be tested regularly during the remediation to verify compliance with appropriate regulations.)

5.4.2 TSCA and RCRA Hazardous Waste Regulations

The TSCA and state and federal RCRA hazardous waste regulations give no process-specific standards that dictate how the ash should be handled, how the stabilization process should be conducted, or how the equipment used should be designed or operated. However, after stabilization, the ash will be tested and a TCLP analysis will be performed to ensure that the ash will no longer be characteristically hazardous (i.e., leach metals above a set concentration based on TCLP).

The stabilization operation must, however, meet the RCRA General Facility Standards outlined in Section 5.6. Also, if the ash is stored in containers or tanks prior to treatment, the RCRA Standards for Containers (310 CMR 30.680) or Storage and Management in Tanks (310 CMR 30.690) must be met.

5.5 Sediment Dewatering ARARs

5.5.1 Introduction

The PCB-contaminated sediments will be dewatered prior to incineration. Previous studies conducted during the FS indicate that a plate and frame filter press will be effective at solids dewatering. However, preliminary results of the test burn indicated that the sediment material was paste-like in consistency and difficult to handle. Further, the material was difficult to dewater using the plate and frame filter press.

The incinerator Remediation Contractor will be responsible for all dewatering and may or may not dewater depending on the characteristics of the sludge and/or the type of incinerator that is used for the remediation.

5.5.2 TSCA and RCRA Hazardous Waste Regulations

TSCA and RCRA provide no specific standards that dictate how the dewatering process should be conducted or how the equipment should be designed or operated. Section 5.3 outlines how the wastewater from this process should be managed.

However, the dewatering should be performed in accordance with the RCRA General Facility Standards discussed in Section 5.6. Also, the dewatered material should be stored in accordance with the TSCA Storage for Disposal Standards (40 CFR 761.65) prior to being incinerated.

5.6 General Facility Standards

5.6.1 Introduction

Besides the regulations for incinerators, RCRA outlines a number of other requirements that must be met by all hazardous waste treatment, storage and disposal facilities.

For the Hot Spots remediation, the Massachusetts Hazardous Waste Regulations provide the RCRA General Facility Standards that must be addressed in the design and implementation of the cleanup. These include:

1.	General Waste Analysis	(310 CMR 30.513)
2.	Security	(310 CMR 30.514)
3.	General Inspection	(310 CMR 30.515)
4.	Personnel Training	(310 CMR 30.516)
5.	Contingency Planning and Emergency Procedures	(310 CMR 30.520-30.524)
6.	Closure Planning	(310 CMR 30.583)
7.	Post-Closure Planning	(310 CMR 30.593)

These standards contain few design-related requirements. However, they provide a number of requirements that must be addressed by the

Remediation Contractor and followed during implementation of the remedy.

5.6.2 General Waste Analysis

The General Waste Analysis Regulations (310 CMR 30.513) provide the standards that operators of hazardous waste treatment systems must follow. These regulations provide no standards that must be incorporated into the design of the remedy. However, the Remediation Contractor must develop a site and equipment-specific waste analysis plan prior to implementing the cleanup. This plan must include the following:

1. The parameters that will be analyzed and a rationale for their selection;

2. Test methods;

3. Sampling methods;

4. Sampling frequency; and

5. Other specific waste analysis requirements for the incinerator and other waste management operations.

5.6.3 Security

The RCRA Security Regulations (310 CMR 30.514) provide the standards for site security that must be met. These include:

1. Developing a security plan to prevent the unknowing entry of persons, minimize unauthorized entry of persons, and prevent entry of livestock onto the active portion of the facility. Also, 24-hour surveillance must be provided.

2. Posting a Sign - "Danger Unauthorized Personnel Keep Out" at all entrances to the site.

3. A fence at least eight feet in height completely surrounding the active portion of the facility, and a means to control entry, at all times, through the gates or other entrances.

The fence and sign will be incorporated into the design. The security plan will be developed and implemented by the Remediation Contractor.

5.6.4 General Inspection

The RCRA General Inspection Regulations (310 CMR 30.515) provide the standards for inspections of the facility and require that an inspection plan be developed to include:

1. Inspect for malfunction and deterioration of equipment or structures, operator error, and discharges which may be causing or may lead to the release of hazardous waste contaminants to the environment.

2. Conduct inspections frequently enough to identify problems in time to correct them before they harm public health, safety, or welfare or the environment.

3. Shall remedy all malfunctions, deteriorations, operator errors, and discharges which any inspection reveals.

4. When a hazard is imminent, or has already occurred, notify DEP immediately.

5. Record every inspection in an inspection log book. Keep log book for three years.

6. Written schedule for inspecting monitoring equipment, safety devices, and operating and structural equipment (dikes and sump pumps).

The inspection plan will be developed and implemented by the Remediation Contractor.

5.6.5 Training Personnel

The RCRA Personnel Training Regulations (310 CMR 30.516) require personnel assigned to the cleanup complete a program of instruction or on-the-job training that teaches them to perform their duties in a way that ensures compliance with the RCRA hazardous waste regulations. The Remediation Contractor will be responsible for training, including developing a site-specific training plan.

The plan will describe how personnel will be familiarized with the properties and hazardous nature of the waste at the facility and with emergency procedures, emergency equipment, emergency systems and personnel safety equipment. It will address:

1. Inspect, repair and replace facility emergency and monitoring equipment;

2. Use of waste feed cut-off system;

3. Response to fire or explosion;

4 Response to potential ground water or surface water contamination incident;

5. Shutdown operations; and

6. Training on communication and alarm systems.

Also, the Remediation Contractor must document the following:

1. Job title for each position;

2. Job description;

3. Description of the type and amount of training; and

4. Records to document that the training or job experience has been given and satisfactorily completed.

5.6.6 Contingency Planning and Emergency Procedures

The RCRA Contingency Planning Regulations (310 CMR 30.520 - 30.524) require that a number of contingency planning and emergency procedures be put in place. These regulations also require that a written contingency plan be developed.

A Contingency Plan is a detailed, written plan which describes the specific precautions and procedures which are to be used to minimize the dangers associated with hazardous waste management. The purpose of the contingency plan is to clearly describe the actions to be taken by facility personnel and the equipment to be used in response to potential or actual fires, explosions, or any other unplanned sudden or non-sudden release of hazardous waste to the air, soil, surface water or ground water.

For the Hot Spots remediation, a written, site-specific contingency plan will be developed by the Remediation Contractor and will include the following information:

1. General information about the facility which includes the name, location, address, type of operation, and a description of the hazardous waste generation, storage, treatment and disposal activities.

2. A clear outline of the lines-of-communication among personnel including names, addresses and phone numbers of the emergency coordinators, and a description of their duties and responsibilities.

3. A list of wastes managed and a description of the hazards associated with the wastes.

4. A description of emergency response procedures including notification, control and containment, and follow-up activities.

5. A list and description of emergency equipment maintained on-site and available from outside sources, if needed.

6. A descriptions of coordination agreements made with the police department, fire department, local board of health, hospital, state and any other emergency response groups.

7. An evacuation plan describing when and how to evacuate during an emergency.

8. For areas where wastes are being stored within the 100-year floodplain boundary, a description of the equipment, methods and procedures which will be used to prevent releases during a flood.

The Remediation Contractor is required to send copies of the contingency plan to the following agencies or authorities (310 CMR 30.522):

- Local Fire Department(s)
- Local Police Department(s)
- Local Hospital(s)

- Local Board(s) of Health
- State and Local Emergency Response Teams
- The DEP
- The Chief Executive Officer of the Community

In addition to the site-specific contingency plan that will be developed by the Remediation Contractor, the Hot Spots remediation must also be designed and operated to meet three other specific standards for emergency prevention and response (310 CMR 31.524).

First, the Hot Spots remediation must be designed, constructed, maintained and operated to prevent releases of hazardous waste (310 CMR 30.524). This regulatory requirement provides no specific design standard that must be addressed, but does provide an overall directive that will be considered in both the design and implementation of the cleanup.

Second, the Hot Spots remediation must be designed to include the following emergency equipment (310 CMR 30.524(2)):

- An internal communications or alarm system capable of providing immediate emergency instruction, by voice or signal, to facility personnel.
- A device, immediately available at all areas of operations, such as a telephone or a hand-held two-way radio, call box, or other instrument, capable of summoning emergency assistance from, and which is acceptable to, local police departments, fire departments, or federal, state or local emergency response teams.
- A portable fire extinguisher; fire control equipment, including special extinguishing equipment, such as that using foam, inert

gas, or dry chemicals; spill control equipment; and decontamination equipment.

- Water at adequate volume and pressure to supply water hose streams or foam producing equipment, or automatic sprinklers or water spray systems.

- Clear markings identifying all exits so that everyone in the facility during an emergency can quickly find their way out of the facility.

- An up-to-date written list containing information prominently posted next to every telephone:

  1. The name(s) and telephone number(s) of the emergency coordinator(s).

  2. The location(s) of the fire extinguisher(s) and spill control material(s), and if present, the fire alarms.

  3. The telephone number of the fire department, or, if there is a direct alarm system, instructions on how to activate it, or both.

And third, all facility communications or alarm systems, fire protection equipment, spill control equipment, and decontamination equipment must be tested and maintained by the Remediation Contractor to ensure its proper operation in time of an emergency (310 CMR 30.524(3)).

5.6.7 Closure Requirements

The RCRA Closure Regulations (310 CMR 30.580) require that the incinerator, wastewater treatment system and other equipment used for the Hot Spots remediation be closed in a manner that minimizes the need for further maintenance. For the Hot Spots remediation, most equipment

used will be decontaminated, closed and removed from the site. Equipment that will remain on-site includes: the decommissioned wastewater treatment plant, concrete foundation and decontamination pads, and the material placed in the covered CDF. The decommissioned wastewater treatment plant and CDF will require upkeep and maintenance (to be performed by USACE-NED). This will result in a clean closure that requires minimal post-closure care.

In accordance with 310 CMR 30.583B, a written closure plan will be developed by the Remediation Contractor. The closure plan will include at least the following information:

1. A description of how the facility will be closed.

2. An estimate of the maximum inventory of hazardous wastes in storage or in treatment.

3. A description of the steps needed to decontaminate facility equipment during closure.

4. An estimate of the date of closure and a schedule for closure.

5. A description of testing and monitoring procedures which shall be used to determine whether or not any hazardous waste residues may remain after closure.

6. A description of how the closure will minimize or eliminate the need of post-closure care and the potential for post-closure care and the potential for post-closure escape of hazardous wastes.

5.6.8 Post-Closure Requirements

Hazardous waste remaining after closure will consist of the non-incinerated materials and trace bottom sediments in the CDF (the ash material disposal of in the CDF will either be solidified/stabilized or pass

the TCLP analysis and therefore be classified as non-hazardous). As outlined above, the incinerator and other equipment used for the Hot Spots remediation will be decontaminated, closed and removed from the site. Consequently, the only post-closure care required for this operable unit will be maintenance of the CDF cover and the decommissioned wastewater treatment plant. The requirements of post-closure care for this operable unit, as outlined in the regulations (310 CMR 30.590), will be addressed in the other operable unit. However, in the interim, the USACE-NED will be responsible for periodic monitoring and facility maintenance.

5.7 Administrative Requirements

5.7.1 Introduction

The work plan provided to ERM contained an outline of information that was to be provided on permitting and other administrative requirements. However, because the Hot Spots remediation is being undertaken pursuant to Section 106 of CERCLA, federal, state and local permits are not required, the information requested by the USACE is not directly relevant to this design. However, because it was outlined in the USACE Work Plan, each point is addressed below and appropriate information is provided.

5.7.2 Permitting and Approving Authorities

Although there are no formal permits required, the EPA and the DEP are responsible for accepting the design from the USACE. It is also their responsibility to ensure that the remedial design and remedial action are conducted in accordance with the substantive requirements of the appropriate environmental laws and regulations. The Contracting Officer will be responsible for providing overall approval of submittals from the Remediation Contractor based on the design specifications. EPA and DEP will review these submittals as appropriate.

5.7.3 Construction and Operating Permits

There are no required federal, state or local construction and operating permits. However, the design and implementation of the cleanup must address all substantive standards required by the permits. These substantive requirements have been identified in detail in other sections of this Final Design Analysis Report.

5.7.4 Permitting Timeframes

Because of the permitting exemption under CERCLA, there are no permitting timeframes that must be considered. Instead, the USACE, EPA, DEP and appropriate local authorities have agreed to review timeframes as identified in the design specifications. As stated previously, the Contracting Officer will be responsible for approving all Remediation Contractor submittals, obtaining EPA and DEP approval as appropriate.

5.7.5 Permitting and Application Fees

The Remediation Contractor is not required to obtain federal or state permits but must meet the specifications which address the substantive requirements of these regulations. The only permit and application fees that apply will include utility hookup and services charges, which are the responsibility of the Remediation Contractor.

5.7.6 Monitoring and Compliance Testing Requirements

There are a number of monitoring and compliance testing requirements, especially for the incinerator and wastewater treatment system effluent. These requirements are discussed in detail in other sections of this Final Design Analysis Report.

5.7.7 Agency Regulations

The state and federal agency regulations (ARARs) that must be followed for the design and implementation of the Hot Spots remediation are provided in Section 5.1. How those requirements apply to each unit operation of the cleanup, are provided in Sections 5.2, 5.3, 5.4, and 5.5 for the incinerator, wastewater treatment, ash handling and sediment dewatering, respectively. Also, the RCRA General Facility Standards that are ARARs for all the unit operations are provided in Section 5.6.

SECTION 6.0

PROCESS DESCRIPTION

6.1 Overview

As stated previously, the remedial action for the Hot Spots Operable Unit involves:

- dredging 10,000 cy of PCB-contaminated (from 4,000 to over 100,000 ppm) sediments and pumping this material to on-shore facilities for subsequent treatment,

- settling of the sediment material in the CDF located in the Pilot Study Cove Area,

- treating supernatant from the CDF using the following treatment train:

  - equalization
  - coagulation and flocculation
  - settling
  - filtration
  - UV/oxidation

- dewatering of settled sediments prior to incineration,

- incineration of the sediment material for organics destruction, specifically PCBs, and

- disposal of the incinerator ash material on-site (results of the ash material generated during the test burn indicate that the bottom ash material will not require solidification/stabilization prior to on-site disposal).

In addition, the remedial system must meet all ARARs, as identified in Section 5.0, for the proper and safe operation of the system. Besides monitoring of the system to document compliance with the effluent limits, additional monitoring will be required to ensure that no adverse effects (either to the health and safety of the local inhabitants or to the environment) are occurring.

Calculations detailing the sizing of the treatment system are presented in Appendix F.

Descriptive information of the proposed remediation system is presented below. The information is presented by major treatment process. The equipment designations correspond with the designations presented on the Process Flow Diagram (PFD) which is Drawing CER47-400E-101. Piping and Instrumentation information is presented on Drawing CER47-400E-111 and CER47-400E-112. In addition, an overall site layout is presented as Drawings CER47-400E-200 and CER47-400E-201. Drawings CER47-400E-102 presents the hydraulic profile of the wastewater treatment system. The flow rates and concentrations presented in the text, the supporting calculations (Appendix F) and the design drawings represent typical conditions. If appropriate, peak conditions are also presented. Due to variability of physical conditions encountered during dredging, the factors presented in the text may vary during actual operation. However, the system has been designed with sufficient flexibility to allow for these variations.

6.2 Dredging

Based on information supplied by the USACE-NED and included in these documents, a cutterhead hydraulic suction pipeline dredge will be used. The cutterhead will have a pump discharge size of between 8- and 10-inches in diameter. The dredge will provide a minimum output of between 30 to 40 cubic yards (in-situ) per hour of sediment material and transfer the sediment material through 5,200 linear feet of pipeline with a 10 foot

lift. The discharge of the transfer line will be to a diffuser located within the CDF. (The diffuser is owned by the USACE and will be provided to the Remediation Contractor for the completion of this assignment.)

The cutterhead dredge will be capable of making cuts in one foot increments and capable of transmitting the predominantly silty sand (sediments may also include organic silts and clays, shells, organic debris and pieces of wood). Dredging will be performed at high tide and is expected to average about 3.5 to 4.0 hours per day. It is estimated that the dredge will pump at 2,100 gpm at between 2 to 5% solids. Based on the estimated volumes, the dredging operation will require approximately 80 days to remove the estimate 10,000 cy of in-situ sediment material.

6.3 Wastewater Treatment

6.3.1 Initial Settling/Floating Debris/Oil Removal

As part of a separate contract to be implemented during the Fall 1991/Spring 1992, the existing CDF Cell No. 1 will be excavated and lined with an impermeable membrane to a finished bottom elevation of +5.5 ft. The cell will then receive water and sediment pumped during the estuary dredging operations. Cell No. 1 will provide sufficient hydraulic detention time (greater than 8 hours) for the majority of the heavier sediments to settle from the dredged slurry. Cell No. 1 will also allow floatable debris and oil to separate from the dredged material.

The volume of the Cell No. 1 at elevation +13 ft. is approximately 4 million gallons (20,000 cy). The operating level of the water in Cell No. 1 will be from elevation +10.5 ft to +13 ft. At elevation +13 ft there will be a two foot freeboard. Maintaining a minimum operating elevation of +10.5 ft will provide enough volume for storage of the settled sediment. This minimum elevation also provides sufficient ponding depth to prevent resuspension of sediments during the transfer of water from Cell No. 1 to Cell No. 2.

At an average flow rate of 2,100 gpm, the average flow to the Cell No. 1 will equal 504,000 gpd (equates to 4 hours per day). During periods of higher tides and extended daylight, the dredging operations maybe extended for periods of up to six hours (756,000 gpd). The operating volume of Cell No. 1 has the capacity to equalize this additional flow for approximately 1.75 days.

The treatability study performed by ERM indicated that the total suspended solids concentration of the wastewater will be reduced to 250 mg/l after approximately six to eight hours of settling. This will allow a maximum of 12 hours for decanting from Cell No. 1 to the equalization tank (Cell No. 2).

Cell No. 1 will be equipped with absorbent boom type skimmers for the removal of the floating oily material that will surface during the six to eight hour settling period. Other floating debris (leaves etc.) will be collected along with the floating product and then removed manually at the edge of Cell No. 1 with skimmers. All waste generated during this procedure will be placed in tanks and roll-off containers. The material will be disposed using the incinerator after it is mobilized and operating.

Flow from Cell No. 1 into Cell No. 2 will be monitored and controlled by an adjustable weir. The weir will be equipped with a baffle to capture additional floating debris that was not captured during the manual skimming operations. The baffle will also limit the overflow of floating material to the equalization basin (Cell No. 2).

6.3.1.1 Air Emission Controls Options

The potential volatilization of PCBs from the surface of the CDF was investigated extensively during the preparation of these design documents. Several air monitoring studies undertaken in the New Bedford area related to PCB emissions were reviewed. In addition, PCB air emission modeling and sampling was performed by ERM and USACE-WES as part of this

design effort. Based on the results of these studies, a determination was made to monitor volatilization of PCBs to ensure that PCB concentrations in the ambient air do not present a problem. However, potential alternatives to control PCB volatilization were investigated and include, but are not limited to: installation of a floating cover; installation of an inflatable cover; application of surface surfactants to breakdown the floating layer; manual removal of the floating layer; or modification of the diffuser system to limit flocculation of the PCB layer. It should be noted that PCBs in their pure form are heavier that water and would tend to sink. The floating of this oily layer (which has been tested and has elevated concentrations of PCBs) indicates that the PCBs are either being "carried" to the surface by a lighter oil layer, or air is entrained in the oily material and "floating" the PCBs layer to the surface. If the material is "floating" to the surface due to air bubble entrainment, then operational changes in dredging may be sufficient to limit formation of this PCB layer. The design documents provide conditions and procedures that require the Contracting Officer and Remediation Contractor to evaluate and implement controls should ambient PCB concentrations in air reach established action levels. *(Air monitoring and associated levels are discussed in detail in Section 7.3.)*

The design includes four methods to control volatilization of PCBs from the surface of the CDF should the air monitoring program indicate that controls are required. (Air emissions modeling indicates that it is unlikely that implementation of these controls will be required.) The four foam suppression control options include:

- long-term over water,
- short-term over water,
- long-term over solids, and
- short-term over solids.

These four options will allow the Remediation Contractor to implement application of suitable foam suppression material throughout the remediation. Selection of the appropriate foam will depend on the media

that is acting as the source of PCB volatilization and the expected duration of the exceedance. Short-term applications will be appropriate for instances when upsets or short-term weather conditions might result in air measurements above the action limits. Water applications will be used for covering the CDF while solid applications can be used to cover the CDF side walls and other areas where PCB contaminated sediment might be stored.

An additional option available to control volatilization of PCBs from the CDF side walls is the installation of side wall covers. These covers would float when the water level in the CDF was raised, but would cover the side walls as the water level declines. These side wall covers would therefore cover the sediments and surface PCBs that attached to these sediments as the water elevation decreased. (Air emission modeling indicates that PCB contaminated sediments are a likely greater source of volatilization than water covered sediments. Therefore, standard operating procedure is to maintain a water cover over as much of the sediments as possible to reduce air emissions. However, should the water cover not be sufficient, the side wall cover can be added.)

6.3.2 Equalization

The existing second cell will be divided into two cells. The bottom of both cells will have been excavated and lined to an elevation of +5.5 ft under the site preparation contract. The first portion of the cell will become CDF Cell No. 2 and be used to equalize the flows from CDF Cell No. 1. Wastewater movement from Cell No. 1 to Cell No. 2 will flow by gravity. The equalization cell will equalize the flows through subsequent units to approximately 350 gpm. The flow rate from the equalization basin is calculated as follows:

Q (flow rate)=(2,100 gal/min) x (4 hrs)/(24 hrs)
Q = 350 gpm

CDF Cell No. 2 will have sufficient volume (550,000 gallons) to equalize the volume of water produce by an average day dredging operation (504,000 gallons).

The equalized water will be pumped from CDF Cell No. 2 at an average rate of 350 gpm using pumps P-100A and B. These pumps will be operated one on-line with the other in a standby mode. Pump suction will be situated near the bottom of the cell (approximate elevation +6.0 ft) to prevent floating debris and oil that may have passed into Cell No. 2 from being pumped further into the treatment train. A bottom suction for the transfer pump will also limit solids settling in Cell No. 2.

6.3.3 Flocculation/Physical/Chemical Treatment

Equalized water will be pumped from CDF Cell No. 2 to the flocculation tanks (TK-100A,B). The flocculation tanks will also receive the backwash flow (approximately 18 gpm) from the sand filter (F-100). Prior to the flocculation tanks, alum will be added to the wastewater using metering pumps (P-101A,B) at approximately 25 ppm (as aluminum sulfate) mixed using an in-line static mixer (SM-100).

The alum solution (8% as AlO_2) will be stored in a portable alum tote bin. After dosing with alum, the wastewater will flow to the first flocculation tank (TK-100A) where it may be dosed with between 10 to 100 ppm of organic polymer (American Cyanamid Magnifloc 1596C). Polymer addition will be controlled by treatment requirements. The organic polymer addition will aid the alum in flocculating the solids, allowing the flocculated particles to settle more rapidly. Organic polymer will <u>only</u> be added in the event that operating parameters indicate that the concentrations of the other hazardous constituents in the wastewater may exceed discharge limits if the polymer is not added. The reason for limiting the dosing of the Magnifloc 1596C is the potential toxicity affect that residual polymer will have on the wastewater. (As discussed previously, the toxicity of the

wastewater with the polymer addition, is expected to exceed discharge limits.)

Wastewater will then flow to the second flocculation tank (TK-100B). This provides for a total of 15 minutes of detention time in the flocculation tanks which based on the treatability study data is sufficient to provide for good flocculation.

It was noted during the treatability study, that the addition of organic polymer allowed a majority of the flocculated solids to settle out even while being agitated. Addition of organic polymer permits the formation of larger flocculation particles that settle easily. In addition, the polymer allows for the flocculation of the smaller particles, that might otherwise pass through the subsequent settling basin. Therefore, provisions will be included in the flocculation tasks to remove solids. Solids removed from the flocculation tank will be transferred to CDF Cell No. 1.

6.3.4 Secondary Settling

From the flocculation tanks (TK-100A,B) the water will flow by gravity to CDF Cell No. 3 where most of the suspended solids remaining in the wastewater after flocculation will be settled out. CDF Cell No. 3 has a volume of approximately 420,000 gallons (2,000 cy), sufficient for solids storage and hydraulic detention time.

The wastewater will be discharged, at a flow rate of 368 gpm, through a pipe placed along the dividing wall of CDF Cell Nos. 1 and 2. The wastewater will flow across CDF Cell No. 3 and overflow along a weir placed along the wall dividing CDF Cell Nos. 1 and 3 at elevation +12.42 ft. This will minimize short circuiting and allow sufficient time for most of the remaining solids to settle. The effluent weir will have an overflow rate of 5,300 gal/lf•day, which is well within standard limits. The secondary settling basin overflow rate is 68.8 gal/sf•day, which is also within standard limits.

Settled wastewater will be pumped (P-102A,B) out of CDF Cell No. 3 with sufficient head for flow through the sand filter unit. A return line will be installed at this point in the process to allow for the wastewater to be directed back to the CDF Cell No. 1 in the event that the concentrations in the wastewater have not been reduced to the values expected at this point in the treatment process.

After settling, hydrogen peroxide will be added to the wastewater. The hydrogen peroxide skid mounted system (CF-101) includes a hydrogen peroxide storage tank (TK-105) and metering pumps (P-106A,B,C,D). An in-line static mixer (SM-101) is provided to ensure proper mixing of the hydrogen peroxide and wastewater. Hydrogen peroxide is added to remove excess iron that may be present in the wastewater stream prior to the UV system. Precipitation of iron would adversely affect the operation of the UV system by coating the quartz tubes. Hydrogen peroxide will oxidize the soluble iron in the wastewater stream to the ferric state. The iron will then be removed by filtration in the subsequent filtering operations as described below prior to the UV system.

6.3.5 Filtration

After secondary settling (CDF Cell No. 3) the wastewater will be filtered prior to treatment in the UV/oxidation unit. Filtration will be performed by two filter units in series. The first unit is a continuous backwash sand filter (F-100). This coarse filter (removing particles down to a nominal size 10 microns) will remove larger suspended solids and metal oxides not removed in the settling operations. The second unit (F101A,B) is a polishing filter (removing particles down to a nominal size 2.5 microns) system to remove smaller particles remaining after the sand filter.

The sand filter (F-100) proposed is nine foot in diameter. This is equivalent to a filter area of 64 sf. At the design flow of 368 gpm the flow rate is 5.75 gal/min/sf.

The unit will be supplied with a 4 scfm compressor (C-100) which will air-lift the sand through the center of the unit to remove filtered particles from the filter bed. The continuous backwash wastewater from this unit will be returned to the flocculation tank at a flow rate of 18 gpm for removal of the removed solids.

The sand filter will also reduce the level of iron in the waste stream to approximately 2 ppm. This is the concentration at which the iron will not adversely affect the performance of the subsequent UV/oxidation unit. The filter will also act as a coarse filter to remove particles that may clog the polishing filters (F-101A,B). A continuous backwashing filter was selected to eliminate the need for backwash storage and feed systems.

The effluent from the sand filter will be collected in a storage tank (TK-101) which will feed the pumps (P-103A,B) that will provide sufficient pressure to transfer the wastewater through the pressure filters and subsequent treatment units.

The polishing filters (F-101A,B) will remove particles down to 2.5 microns (nominal size) allowing the UV/oxidation system to remove the remaining soluble and particulate PCBs efficiently. The polishing filter unit will consist of two cartridge type filters in parallel. When the pressure drop through the on-line filter exceeds a predetermined set point (approximately 50 psi), the valves will be manually repositioned to put the clean filter on-line and the used filter off-line. The used filter cartridge will then be replaced and the old cartridge placed in storage until incinerated using the on-site incineration system. This duplex filter system will allow the cartridges to be changed without discontinuing forward flow.

An additional return line will be located after the filters to allow the wastewater to be directed back to the CDF Cell No. 1 in the event that the filters do not reduce the solids concentration to levels required for discharge.

6.3.6 UV/Oxidation

The UV/oxidation system (UV-100) will reduce the level of PCBs in the wastewater to discharge levels required as outlined in the ARARs section of this report. The unit is capable of treating 350 gpm of wastewater with concentrations of PCBs of up to 350 ppb. The unit will have a minimum detention time of 3 minutes although treatability studies have indicated that the PCBs will oxidize in approximately 1.4 minutes.

Although not anticipated to be present at this stage of the treatment train, the UV/oxidation system will also be effective at removing any naphthalene that remains in the waste stream. The analytical data gathered during the ERM Treatability Study indicated that the major constituent of the PAHs found in the wastewater consisted of naphthalene.

6.3.7 Monitoring Requirements

The Remediation Contractor will monitor the wastewater at various points along the treatment process to ensure that the system is functioning properly and that discharge requirements are being achieved. The wastewater will be tested for the following parameters:

- PCBs
- TSS
- Lead
- Chromium (6+)
- Copper
- Nickel
- Zinc
- Cadmium
- PAHs
- Iron

The concentrations of these contaminants will be monitored at points prior to the recycle lines and at the effluent weir from CDF Cell No. 1 to ensure that the system is operating as designed. The tests will be performed on a daily basis for the first week, or until the system operating parameters have been optimized, and then on a weekly basis for the remainder of the time the treatment process is operating. The Remediation Contractor may require more frequent monitoring of the system to ensure compliance with the effluent limits and to maintain proper operation of the system.

The effluent from the process will be monitored by a composite sampler. The sampler will take 24-hour composite samples to monitor performance and ensure the system is meeting water ARARs. To ensure proper performance of the treatment system, the effluent wastewater will be collected and analyzed daily for the first week of operation. If, based on the first week of analyses, the wastewater treatment system is operating properly (i.e., the system has not exceeded any of the effluent limits for seven consecutive days) required sample analysis will be reduced to once per week. However, if any sample analysis exceeds the appropriate ARAR value, monitoring frequency will again be daily, until five consecutive samples are within appropriate limits.

The appropriate ARAR effluent limits for this remediation (as discussed previously) are:

Parameter	Long-Term Average(1) (ppb)	Monthly Average(2) (ppb)	Daily Maximum(3) (ppb)
PCBs(4)	0.6	0.71	1.3
Cadmium	<5	6.0	10.7
Chromium	6	7.1	12.8
Copper	7	8.3	15
Lead	4	4.8	8.5

(1) Long-Term Average refers to the achievable limits as determined from the treatability studies.

(2) Monthly average is 1.19 times the Long-Term Average based on EPA Permit Writers Guide.

(3) Daily Maximum is 2.13 times the Long-Term Average based on EPA Permit Writers Guide.

(4) PCB permit limit based on measure concentrations of Aroclors 1242 and 1254 that comprise the 0.6 ppb estuary background concentration.

The above limits are based on analytical analysis using standard EPA Methods.

6.4 Sediment Dewatering

6.4.1 Sediment Storage and Transfer

Sediment material will be collected in the following locations:

- settling of dredged sediments in the CDF Cell No. 1,
- settling of dredged sediments in the equalization basin (CDF Cell No. 2),
- settling of chemically coagulated and flocculated sediments and colloidal material in the secondary settling basin (CDF Cell No. 3), and
- filtration of colloidal and fine sediment material by the pressure filters.

With the exception of the pressure filters, the sediment materials will remain stored in the settling basins until the completion of the estuary dredging portion of the remediation. (This will limit disruption of the water column during settling and also minimize volatilization of the surface layer.) Upon completion of the estuary dredging operation, the estuary dredge and connecting pipeline will be decommissioned and removed. Discontinuation of estuary dredging will eliminate the flow of approximately 500,000 gallons per day of wastewater through CDF Cell No. 1. The wastewater treatment system will then only be required to treat incinerator blowdown, storm water and other miscellaneous flows. It is anticipated that the wastewater treatment plant will need to remain operational until completion of the incineration of sediment materials, but

it may only be on-line periodically as need to reduce the volume of wastewater stored in CDF Cell No. 1.

Discontinuation of flow into the CDF will allow a separate dredge, of smaller capacity, to be placed in the CDF and begin dredging of the settled sediment material from the CDF. This dredge will lift the settled sediment material to the sediment dewatering system prior to incineration. The sizing of this dredge will depend on the capacity of the incineration system, available dewatered material storage capacity and the feed requirements of the incinerator.

6.4.2 Sediment Dewatering

The requirements of the sediment dewatering system will be based on the specific requirements of the proposed incineration system. From previous studies, it has been determined that the sediment material can be dewatered to approximately 65% solids using a plate and frame filter press. This solids content was achieved without the addition of chemicals. Filtrate from the dewatering process will be returned to the CDF Cell No. 2 (equalization) until the quantity of filtrate starts approaching storage capacity. The wastewater treatment facility will then be brought back on-line to treat this wastewater prior to discharge.

6.4.3 Filter Cake Handling

Dewatering filter cake (if dewatering is required for incineration) will be temporarily stored in the vicinity of the incinerator. Cake storage will equal a minimum of one days capacity for incineration. This will allow for continuous feed to the incinerator during filter press runs and during periodic maintenance of the filter press. Dewatered cake will be stored in an enclosed structure to ensure that the cake does not get wet during storm events. The method of feeding the dewatered solids to the incinerator will depend on the incinerator selected.

6.4.4 Monitoring Requirements

In order to ensure proper operation of the sediment dewatering system, the following parameters will be monitored:

- dredge output
  - solids content
  - flow rate

- filter press output
  - solids content
  - volume flow rate
  - PCB concentration

These parameters will be monitored daily to ensure the dewatered sediments are suitable to be fed to the incinerator. The criteria for determining when it is suitable for sediments to be fed to the incinerator is to be determined by the incinerator operator and may vary depending on which incinerator is used at the site.

6.5 Incineration

6.5.1 Available Units

Conversations with several incinerator vendors indicate that there are several mobile incinerators of appropriate capacity to handle the PCB and metal contaminated sediment material anticipated at this site. Several types of incinerator technologies have been identified including: fluidized bed, rotary kiln and infrared. Based on preliminary conversations, the vendors will have units available after July 1992, the anticipated period of time the system will need to be on-site.

6.5.2 Plume Modeling

As identified in Section 5.0, the NAAQS and State Ambient Air Quality Standard (310 CMR 6.00) were reviewed especially in regard to heavy metal emissions. Emission limits for heavy metals were evaluated based on Guidance on Metals and Hydrogen Chloride Controls for Hazardous Waste Incinerators, Volume IV of the Hazardous Waste Incineration Guidance Services (EPA/530-SW-90-004). This document specifies waste concentrations, feed rates and emission rate screening limits which are determined based on effective stack height and terrain. The results of plume modeling are present in Appendix G. ERM determined with the proper combination of sediment feed rates, stack height and other operating conditions, emissions of metals will not cause unacceptable risks. The Remediation Contractor will be required to demonstrate that the particular equipment and operating conditions proposed do not cause unacceptable emissions.

6.5.3 Operation

The Remediation Contractor will supply an incinerator capable of operating 24-hours per day, 7-days per week. The incinerator will receive dewatered sediments at a rate of 5 to 10 tons per hour, which will be incinerated to reduce the PCB concentrations of the sediments to acceptable levels (DRE of 99.9999%). The incinerator will also be equipped with off-gas treatment systems to limit metal and other pollution discharges to the environment. The incinerator operator will have the option to treat the scrubber water by transferring the scrubber water to the equalization basin for further treatment or treating the water with an evaporation system. The purpose of using the independent scrubber water treatment system is to eliminate the discharge of elevated metals concentrations to this wastewater treatment system. If an evaporation type system is used the system will function to concentrate the scrubber water. Particulate material in the scrubber water will be allowed to settle with the water returned to the air pollution control system. Using this

type of system, no wastewater is discharged. Any residue from an evaporation system will be removed and mixed with the ash material after being analyzed by a TCLP analysis and stabilized, if necessary. PICs will be monitored during the trial burn and operating conditions will be set to ensure PIC formation is minimized.

6.5.4 Monitoring Requirements

As indicated in the draft specifications, the following parameters will be monitored:

- Temperature
  - Main Chamber (continuous, recorded)
  - Main Chamber Exit Gas
  - Secondary Combustion Chamber (continuous, recorded)
  - Secondary Combustion Chamber Exit Gas
  - Quench Chamber Exit Gas (continuous)

- Pressure
  - Main Chamber (continuous, recorded)
  - Primary Combustion Air
  - Quench Inlet
  - Scrubber Inlet (continuous, recorded)
  - Scrubber Discharge (continuous, recorded)

- Flows
  - Auxiliary Fuel to Main Chamber (continuous, recorded)
  - Auxiliary Fuel to Secondary Chamber (continuous, recorded)
  - Quench Tower Water Flow

- Feeds
  - Sediment (continuous, recorded)

- Flue Gas Components
  - Carbon Monoxide (continuous, recorded)
  - Oxygen (continuous, recorded)
  - Carbon Dioxide (continuous, recorded)
  - Hydrocarbons (continuous)
  - Opacity (continuous)

The system will be equipped with an automatic control system that:

- Maintains the temperature in the primary and secondary combustion zones.

- Maintains the required levels of O_2 and CO in the stack gas.

- Automatically stops sediment feed to the incinerator if:
  - failure of the CO or O_2 monitors
  - failure of the sediment feed rate monitoring and/or recorder
  - the O_2 level falls below 3% (volume) in the stack.

6.6 Ash Handling

Based on a review of the preliminary results of the TCLP analysis of the bottom ash material from the test burn, we would anticipate that the incinerator ash material will not require stabilization/solidification, allowing it to be disposed as a non-RCRA hazardous waste. However, the fly ash may require stabilization/solidification to pass the TCLP analysis. Refer to Appendix D for the results of previous testing of ash materials.

However, the ash material will need to be stored on-site until the CDF Cell No. 1 is emptied of the PCB-contaminated sediment material. Temporary storage of this material will require facilities that will ensure the ash material does not get blown away. Based on the test burn, it would be expected that facilities for temporary storage of up to 7,000 cy of ash

material will be required. Ash handling will need to include appropriate procedures to limit dust and other fugitive losses.

Ash material will be tested periodically to ensure the material is suitable for disposal on-site (i.e., passes the TCLP test). Should a batch of ash fail the TCLP test, it will be separated from the other ash material and solidified/stabilized prior to disposal.

When all the PCB-contaminated sediment material has been removed from the CDF cells, CDF Cell No. 1 will be prepared for placement of the ash material. First, the Remediation Contractor will be responsible for repairing any sections of the membrane liner that may have been damaged during transfer of the material from the cells. Second, the Remediation Contractor will install the leachate collection system and monitoring well in the vicinity of the center of CDF Cell No. 1 (at the location of the concrete pad used for the dredge diffuser). This monitoring well is installed to allow the USACE-NED to monitor leachate collection in the cell after capping. Next, the Remediation Contractor will place the ash material in the cell (approximately 7,000 cy depending on the amount of material that needs to be stabilized/solidified). Finally, the Remediation Contractor will place the cap on top of the ash material as specified. In order to meet requirements, the CDF cell cap will have the following features:

- Graded debris and berm material over the ash.
- 6-inch subgrade developed from material from the existing berm.
- 6-inch minimum of low permeability bedding soil.
- 60 mil HDPE geomembrane.
- Geonet composite layer.

- A woven geotextile filter fabric.
- 18-inches of cover soil.
- 6-inches of topsoil with vegetative cover.

In addition, the cover will have a 3% grade to ensure runoff from the cap. The cap is intended to minimize infiltration of rainwater into the ash material. As stated previously, the monitoring manhole (48-inch diameter) will be equipped with four collection vanes (6-inch corrugated, perforated HDPE) to collect leachate from the ash material. This will allow the USACE-NED to monitor the integrity of the cap.

6.7 Instrumentation and Controls

Various instrumentation and controls will be used to monitor the wastewater treatment, incineration, and dewatering systems to allow the systems to operate in a safe manner in accordance with all regulations. The controls used in the wastewater treatment system are present in the Piping and Instrumentation Diagram (Drawings CER47-400E-111 and CER47-400E-112) in the attached design drawings.

The incineration and dewatering systems controls, as required by applicable regulations and guidelines, are outlined in the incineration system specification section. The final system instrumentation and controls configuration required for operation will be dependant on the incineration system chosen by the Remediation Contractor for the remediation.

SECTION 7.0

PROCEDURAL COMPONENTS OF DESIGN ANALYSIS

7.1 Introduction

This section of the Design Analysis report presents the basis for the following components of the design:

- Safety and Health
- Air Monitoring
- Site Maintenance

Each of these components is discussed in detail below.

7.2 Safety and Health Provisions

The safety and health specifications will ensure compliance with the Occupational Safety and Health Administration (OSHA) regulations. The OSHA regulations apply to all industrial activities and ensure that work is performed in a safe manner. They also apply to USACE operations, including CERCLA cleanup actions. These regulations are provided in the Federal Register at 29 CFR Part 1926 (Construction Industry Standards), 29 CFR Part 1910 (Occupational Safety and Health Standards) and, especially, 29 CFR Section 1910.120 (Hazardous Waste Operations and Emergency Response).

7.2.1 Construction Industry Standards - 29 CFR Part 1926

The OSHA Construction Industry Standards provides safety and health requirements for construction activities. The standards contain over fifteen subparts and give specific safety and health requirements for a wide variety of construction activities. Also, provisions to implement these standards, in the form of detailed specifications, are given in the USACE's *Safety and Health Requirements Manual*, EM 385-1-1.

The Remediation Contractor will be required to comply with the 29 CFR Part 1926 regulations. All important or particularly relevant standards will be emphasized and provided directly in the specifications. However, because the standards also cover a very wide range of topics and the USACE safety and health manual is over 300 pages long, it is not practiced to include all possible requirements in the specifications. Instead, any portion of the the OSHA Construction Industry Standards and the USACE manual not included directly in the specifications will be made part of them by reference.

7.2.2 Occupational Safety and Health Standards - 29 CFR Part 1910

The OSHA Occupational Safety and Health Standards give the requirements that industry must follow to ensure that safety and health of workers are protected. Like the Construction Industry Standards, this part of the OSHA regulations covers a very wide range of activities -- Part 1910 contains twenty subparts and over 400 sections.

The Remediation Contractor will be required to comply with all of 29 CFR Part 1910. All important or particularly relevant standards will be emphasized and provided directly in the specifications, including all of Section 1910.120 - Hazardous Waste Operations and Emergency Response. However, because of the length of the regulations and the broad range of topics for which standards are provided, it is not practical to include all of the possible requirements in the specifications. Instead, like the Construction Industry Standards, any part of the OSHA Occupational Safety and Health Standards not included directly in the specifications will be made part of them by reference.

7.2.3 Hazardous Waste Operations and Emergency Response - 29 CFR Part 1910.120

The OSHA regulations for Hazardous Waste Operations and Emergency Response cover hazardous substance cleanup operations conducted under the Comprehensive Environmental Response, Compensation, and Liability

Act of 1980 (CERCLA) as amended. This section of the OSHA regulations provides the most important and relevant requirements for the Hot Spots Operable Unit.

Because the exact pieces of equipment and procedures for the cleanup work will be determined by the Remediation Contractor, the exact safety and health provisions that will be followed to address the 29 CFR 1910.120 regulations will also be the Remediation Contractor's responsibility. The specifications will, however, identify the contaminants of concern and chemical and physical hazards that may be encountered.

In addition, specifications will be included in the Hot Spots Operable Unit Design to address the following requirements of Section 1910.120:

1. Safety and Health Program
2. Site Characterization and Analysis
3. Site Control
4. Training
5. Medical Surveillance
6. Engineering Controls, Work Practices and Personnel Protective Equipment
7. Monitoring
8. Information Program
9. Material Handling
10. Decontamination
11. Emergency Response
12. Illumination
13. Sanitation
14. Site Excavation
15. Contractors and Subcontractors

Each of these areas listed above will be addressed in a comprehensive Site Safety and Health Plan (SSHP). The specifications will provide a detailed outline of the required contents of the SSHP that the Remediation Contractor shall follow.

The SSHP will establish, in detail, the protocols necessary for protecting on-site personnel and the local public from site hazards associated with the remediation. This work includes installation of equipment, dredging of PCB-contaminated sediments from the estuary, transfer of sediments to the CDF, treatment of wastewater generated during dredging operations, transfer of sediments from the CDF to incineration systems, incineration of sediments, temporary storage of ash material and placement of the ash material (after stabilization, if required) in the CDF, demobilization of equipment and final grading of the site.

The overall hazard to personnel performing site activities for the Hot Spots remediation is currently rated at moderate risk. This is because PCBs and the heavy metals that are contaminants of concern are relatively non-volatile and appropriate personnel protective clothing and operational controls can be implemented to address site risks. The overall hazard to off-site personnel and local residents is rated at low. This hazard assessment is based primarily on the potential for contact with and inhalation of contaminants during dredging, wastewater treatment, incineration and ash handling activities. Again, because the contaminants of concern are relatively non-volatile and the potential for exposure off-site is low, the hazards off-site will be minimal. Other potential hazards to on-site personnel include physical injury from on-site ground equipment and heat/cold stress. A summary of the remedial activities and potential hazards is provided in Table 7-1.

Workers on-site during remedial activities could be exposed to contaminants by dermal contact and the inhalation of airborne particulates or volatilized contaminants. Dermal and inhalation exposure to contaminants could arise from the open CDF, as a result of dredging operations (e.g., clearing of debris from or unclogging the dredgehead), dewatering the sediment, and exhaust gases and vapors generated during incineration of the sediment. To minimize or prevent such exposure, personnel protective equipment (i.e., respirators, overalls, and gloves) will be used and a number of operational controls will be implemented. In addition, ambient air monitoring and monitoring of incinerator stack gases

TABLE 7-1

REMEDIAL ACTIVITIES AND HAZARDS

ACTIVITY	HAZARD
General Construction	Heavy equipment Heat producing/electrical equipment Heat/cold stress
Dredging	Drowning/injury Rotating equipment Contaminant exposure Heat/cold stress Electrical hazards
Dewatering	Chemical exposure Electrical equipment Heat/cold stress
Wastewater Treatment	Chemical exposure Physical hazards (e.g., falling) Electrical hazards Heavy equipment
Incineration	Heat stress Burns Particulate/emissions exposure Confined space entry
Solidification	Chemical exposure Heavy equipment Noise Heat/cold stress
Disposal	Particulate exposure Heavy equipment Noise Heat/cold stress

shall be conducted to ensure worker safety within immediate areas of remedial activity.

The chemicals of concern at the site, as well as the chemical hazards, are provided in Table 7-2. As indicated, there are four heavy metals of concern: lead, copper, cadmium and chromium. Although these metals are of concern, they are found at relatively low concentrations. To demonstrate that OSHA standards are being addressed, particulate monitoring will be conducted and appropriate safety precautions will be followed. No other ambient sampling or analysis is warranted for the metals, again because of the low levels and their non-volatile nature.

In addition to the metals, the other contaminant of concern (and also the primary concern at the site) is PCBs. While PCBs are relatively non-volatile, they are a suspected carcinogen and, therefore, a significant safety and health issue.

There is no real-time way to measure for PCBs in air, unlike benzene and other more volatile compounds that can be detected with instrumentation like photoionization detectors (PIDs). To measure for PCBs in the air samples must be collected and analyzed. The minimum turn-around time for sample analysis is from 24 to 48 hours.

Because there is no real-time way to measure for PCBs, the safety and health and air monitoring portions of the specifications will require the Remediation Contractor to provide site controls, personnel protective equipment and to take other measures necessary to ensure that unacceptable exposure does not occur. Also, higher levels of personnel protective equipment (Level C) will be required until air samples have been analyzed and it has been demonstrated that PCB concentrations are not a concern. This is particularly important around the CDF and other areas where PCB-contaminated materials will be managed.

In the specifications, the Remediation Contractor will also be required to conduct ambient air monitoring for PCBs. The results of this monitoring

TABLE 7-2

POTENTIAL CHEMICAL HAZARDS

Compound	Route of Exposure	Symptons/Target Organs
Lead	Inhalation Ingestion Contact	Can cause anemia, insomnia, anorexia, and abdominal pain. Can injure gastro-intestinal tract, central nervous system, kidneys, blood, and gingival tissue. PEL - 0.05 mg/m^3 Action Level - 0.03 mg/m^3
Copper	Inhalation Ingestion Contact	Can cause irritation of mucous membranes, pharynx, nasal perforation, eye irritation, metal taste and dermatitis. Can injure respiratory system, skin, liver and kidneys. PEL - 1 mg/m^3
Cadmium	Inhalation Ingestion	Can cause pulmonary edema, dysphea, cough, tight chest, substernal pain, headache, chills, muscle aches, nausea, diarrhea, anomsia, emphysema, proteinurea and anemia. Suspected carcinogen. Can injure the respiratory system, kidneys, prostrate and blood. PEL - 0.2 mg/m^3 (NIOSH 0.01 mg/m^3)
Chromium	Inhalation Ingestion	Can cause histologic fibrosis of the lungs. Suspected carcinogen. Can injure respiratory system. PEL - 1 mg/m^3 Hexavalent [Cr(+6)] - 1 ug/m^3
Chloro-diphenyl (PCB)	Inhalation Absorption Ingestion Contact	Can cause irritation to eyes and skin; dermatitis; jaundice, dark urine. Suspected carcinogen. Can injure skin, eyes and liver. PEL - 0.5 (mg/m^3) (NIOSH 1.0 ug/m^3 - 10-hr TWA)

(particularly from the monitors around the CDF) will be incorporated into the SSHP to ensure that unacceptable ambient concentrations of PCBs are not reached.

7.3 Air Emissions

The contaminants of concern at the site include heavy metals and PCBs. Although there is some heavy metals in the contaminated sediments, the potential to emit these compounds is very low. Consequently, no ambient monitoring for metals is warranted.

For the New Bedford Hot Spots remediation there will be two major potential emission sources of PCBs: the incinerator and the CDF. In addition there will be a number of deminimus sources, such as the incinerator feed system, wastewater treatment system and sediment handling operations.

The incinerator will achieve a very high level of PCB destruction -- at least 99.9999% -- and waste handling will be conducted to minimize emissions. Also, modeling of emissions from the CDF indicates that emissions will be small. However, to further ensure that PCBs do not endanger either on-site workers or people living and working around the site, monitoring and controls, if needed, will be incorporated into the specifications.

7.3.1 Air Emission Monitoring and Controls

An extensive monitoring system will be installed in and around the site. No engineered emission controls (i.e., foam application or sidewall covers) will be implemented at the start of remediation, but will be available in the event that elevated levels of PCBs are observed.

The monitoring system will be configured like the network installed for the 1988-1989 Pilot Dredging and Disposal Study conducted by EPA and the USACE. A minimum of four monitoring stations will be installed around

the CDF. There will also be three off-site monitors and one background monitor and a meteorological tower.

Monitoring will be conducted to demonstrate that ambient concentrations of PCBs are below action levels established to protect human health. Two risk-based action levels will be used. The first is a short-term maximum level of 1 $\mu g/m^3$ and the second is a long-term average value of 64 ng/m^3.

The short-term action level is equal to the NIOSH 10-hour exposure limit for PCBs, treating PCBs as an occupational carcinogen. The long-term action level corresponds to a 10^{-6} cancer incidence risk associated with exposure during remediation for 24 hours-per-day for 6 months.

In the event that the action levels are exceeded due to emissions from the CDF or other equipment, corrective action will be warranted that could include operational changes to reduce emissions and physical controls, such as foam application or installation of side wall covers for the CDF. The specific measures that would be implemented will be designed and included as part of the Remediation Contractor's contingency plan for the site.

The basis for the monitoring system and control measures for the CDF are based in large part on earlier ambient air monitoring studies conducted in New Bedford and on emission modeling performed by ERM and USACE Waterways Experiments Station (WES). Provided below are summaries of this work. Also presented are the Massachusetts' ambient standards for PCBs and the Decision Criteria used by EPA during the 1988-1989 Pilot Dredging and Disposal Study.

7.3.2 Ambient Air Monitoring Studies

There have been three ambient extensive air monitoring studies completed in the New Bedford area for PCBs. A brief summary of each is provided below.

1982-GCA Report

In 1982, GCA Corporation Technology Division (EPA Contract No. 68-02-3168) completed an ambient monitoring program for EPA. It showed that the average ambient levels of PCBs in New Bedford was approximately 10 ng/m^3.

1986-NUS Report

In September of 1985, NUS conducted an extensive ambient air monitoring program for particulates, metals and PCBs. A total of 45 PCB samples were collected from four monitoring locations along the Acushnet River Estuary.

This study confirmed GCA's conclusion that background or average ambient concentration of PCBs in the New Bedford area is approximately 10 ng/m^3. Also, very high levels of PCBs were observed at a sampling location (Location 2) near the Hot Spot. At low tide, ambient concentrations of PCBs near the Hot Spot ranged from 196 to 471 ng/m^3. The concentration decreased by about 50% at high tide when some or all of the mud flats at the Hot Spot were covered by water. Concentrations observed at the other sampling locations were significantly lower than near the Hot Spot, but were also elevated.

ERM believes that the high levels of PCBs observed by NUS were caused by the large source area and exposed sediments in the Hot Spot (see Appendix G).

1990-EBASCO Report

EBASCO conducted an air monitoring program in conjunction with the 1988-1989 Pilot Dredging and Disposal Study managed by the USACE. The study was done to evaluate dredging and disposal

methods and was conducted using sediments with relatively low levels of PCBs (averaging less than 500 ppm).

EBASCO monitored ambient PCB concentrations in the air at four locations around the CDF and at one background location. They also collected meteorological data, including wind speed and direction and precipitation rates, and measured ambient levels of heavy metals, hydrogen sulfide (H_2S) and volatile organic compounds (VOCs). The study showed no elevated levels of metals, H_2S, VOCs or PCBs.

PCB concentrations in the air in the vicinity of the CDF ranged from 4 to 8 ng/m^3. This is similar to earlier average ambient levels of about 10 ng/m^3 measured by GCA and NUS. The highest concentration observed was 26.7 ng/m^3 at the background sampling location north of the CDF toward the Hot Spot.

In addition to the actual sampling and analysis work completed by EBASCO, the report provided two action levels, referred to as Decision Criteria, set to ensure that PCB emissions would not endanger human health. The first was a maximum daily value of 10 $\mu g/m^3$ based on the 10-day Health Advisory developed by EPA to protect against the non-carcinogenic effects of PCBs. The second was a more stringent, long-term average value of 64 ng/m^3. This value was risk-based and corresponds to a 10^{-6} cancer risk. The NIOSH 10-hour exposure limit was not used.

At no time were either of the Decision Criteria exceeded. In fact, the highest measured concentration of PCBs was 26.7 ng/m^3 (at the background location), or only about one-half of the more stringent long-term action level of 64 ng/m^3.

7.3.3 Emission Modeling and Testing

ERM and USACE WES have estimated the emission rates that may result from the CDF during the Hot Spot remediation. WES also conducted a laboratory assessment of PCB volatilization rates.

ERM and WES estimated PCB emission rates from the CDF and the resulting ambient concentrations by first predicting the volatilization of PCBs from the CDF into the air and then by modeling the dispersion of PCBs. Although a number of different models were used, there was general agreement -- that is, between one and two orders of magnitude -- among the predicted ambient levels of PCBs. Using conservative assumptions, the maximum 24-hour concentrations ranged from 46 to 200 ng/m^3 and a maximum annual average of 29 ng/m^3 were predicted.

In addition to the modeling, the engineers at WES also conducted a laboratory assessment of PCB volatilization rates. Their testing showed emission rates and corresponding ambient PCB concentrations of about two orders of magnitude less than predicted by the models under low wind speed conditions.

7.3.4 Ambient Standards for PCBs

Massachusetts has two ambient standards for PCBs in air. The first is a 24-hour average Threshold Effects Exposure Limit (TEL) of 3 ng/m^3 (0.003 $\mu g/m^3$). The second standard is an allowable annual average concentration of 0.5 ng/m^3 (0.0005 $\mu g/m^3$). This corresponds to a 10^{-6} risk based on a lifetime of exposure.

In addition to these Massachusetts' standards, EPA developed a 10-day Health Advisory of 10 $\mu g/m^3$ for short-term exposure. As discussed earlier, this value was used by EPA as their Decision Criteria for short-term exposure during the Pilot Dredging and Disposal Study and was set to

protect against the acute, non-carcinogenic effects associated with exposure to PCBs.

For occupational exposure there are three OSHA/NIOSH standards. The first two are OSHA standards set to protect against non-carcinogenic risk due to exposure to the skin. For PCBs with 42% chlorine, the standard is 1 mg/m^3 and for PCBs with a higher chlorine content (54%), the standard is 0.5 mg/m^3. The third standard is the NIOSH 10-hour exposure limit of 1 $\mu g/m^3$ (0.001 mg/m^3). This more stringent NIOSH standard was set because PCBs are considered an occupational carcinogen.

Besides these Massachusetts, EPA and OSHA/NIOSH standards, there are a number of others being used. For example, New York State's Air Toxics program sets a short-term limit of 100 ng/m^3 (0.1 $\mu g/m^3$) and a long-term limit of 0.45 ng/m^3 (0.00045 $\mu g/m^3$). Also, the 1986 NUS report referenced a Canadian guideline of 150 ng/m^3 for 24-hour exposure and an allowable annual mean value of 35 ng/m^3.

7.3.5 Basis for Ambient PCB Action Levels

First, it is not possible to meet either of the Massachusetts ambient air standards for PCBs during remediation because the background levels of PCBs in New Bedford are much greater than both the short- and long-term standards. In fact, the background concentration of PCBs in the New Bedford area of around 10 ng/m^3 corresponds to a carcinogenic risk of 2.2×10^{-5}. Therefore, it is appropriate to set allowable ambient concentrations of PCBs for the remediation that are above the state's standards but still protective.

The short-term action level that ERM has proposed is equivalent to the NIOSH standard for carcinogenic effects due to PCB exposure. This level is also one-tenth the value of the short-term Decision Criteria in the earlier EPA/USACE pilot dredging study.

The long-term action level is set to address the carcinogenic risks. The background concentration of PCBs in New Bedford causes a lifetime carcinogenic risk of 2.2×10^{-5}. Exposure during remediation to PCBs in the air at a concentration of 64 ng/m^3 adds an incremental lifetime risk of 10^{-6} (see calculations in Appendix G). This incremental increase in risk is small in comparison to the risk caused by lifetime exposure to the background ambient concentrations of PCB in New Bedford and, therefore, the long-term standard of 64 ng/m^3 is protective.

Modeling conducted by ERM and WES and also the WES laboratory study, which represents conservative estimates, showed that ambient concentrations resulting from emissions from the incinerator and CDF will be below the action levels. Short-term ambient concentrations of PCBs from the CDF should be below 200 ng/m^3 -- about five times less than the short-term action level. The long-term average concentrations of PCBs should be below 29 ng/m^3 -- about 1/2 of the long-term action level set to address the carcinogenic risks.

In addition to the action levels, engineering controls (foam suppression and side wall covers) will be designed and included as part of the Remediation Contractor's contingency plan. Should the action levels be exceeded, the pre-designed controls would be implemented.

7.3.6 Basis for the Number and Location of the Ambient Air Monitors

As mentioned, there will be two major potential emission sources of PCBs at the site, the CDF and incinerator, and a number of other deminimus sources. To demonstrate that ambient concentrations of PCBs do not endanger human health (that is by showing that the protective action levels are not exceeded), a series of monitors will be installed in and around the site.

First, to demonstrate that emissions from the CDF and other potential on-site sources do not pose a threat, four monitors will be installed around the CDF. This will allow emissions, if present, to be detected in any wind

direction. Also, these monitors will be used in the Remediation Contractor's Safety and Health Program to provide information for occupational exposure.

Second, to demonstrate that there is no unacceptable risk posed off-site from the incinerator and the other potential emissions sources, three off-site monitors will be installed. These monitors will be placed at locations that correspond to the maximum possible off-site PCB concentrations from the incinerator (i.e., the plume touch-down point). Because the Remediation Contractor will determine where the incinerator will be sited and will also set operating conditions, like stack height and exit velocities, that can affect emission rates and contaminant transport, the location of the three monitoring points will be determined by the Remediation Contractor using models. This will be done after site-specific information is available. The siting of monitors will be in accordance with EPA's guidance, including *Ambient Monitoring Guidelines for Prevention of Significant Deterioration*, EPA-450/4-87/007.

7.3.7 Basis for the Meteorological Station

To provide necessary data to help locate the three off-site monitors and to also provide data throughout the remediation to help predict ambient PCB concentrations, site-specific meteorological data is needed. Consequently, an on-site meteorological station will be installed. It will be used to collect data on wind speed and direction, temperature, precipitation, humidity, and atmospheric pressure. It will also have an appropriate data logging system.

7.3.8 Basis for the Ambient Monitoring Frequency and Sampling Time

The frequency and duration of monitoring must be such that it can demonstrate that ambient concentrations of PCBs do not exceed either the long-term average or short-term 10-hour action levels. To do this, four distinct monitoring phases are needed.

First, prior to the start of remedial activities at the site which could result in PCB emissions, a four-week monitoring program is needed to establish baseline conditions. The sampling time for this will be 24 hours. This will allow average daily ambient PCB concentrations to be determined.

The second phase of the ambient monitoring program is at the start of the dredging operations when the CDF will be used for sediment storage and the wastewater treatment system will be operational. Because this will be the first time highly contaminated sediments will be managed in large volumes, and also because the CDF will be uncovered, an intensive sampling program is needed. To provide data to correlate cleanup activities with observed ambient PCB concentrations, a relatively short sampling time is also needed.

Consequently, the second phase of the ambient monitoring program will be conducted for three weeks coinciding with the start of dredging. Samples from the on-site monitors will be collected every eight hours to correspond to the various cleanup activities, such as filling the CDF, sediment settling and dewatering. Samples will also be collected daily from the three off-site monitors. The three-per-day, eight-hour samples are not needed at the off-site monitors because the on-site monitors will provide the necessary data to allow the correlation between cleanup activities and the resulting ambient PCB concentrations.

The third phase of monitoring required is longer term during the operation of the CDF, dredge, incinerator and other equipment. This will be 24-hour sampling conducted twice-per-week on-site and once-per-week at the three off-site monitors.

The fourth and final phase of the monitoring program will be conducted during closure activities to demonstrate that ambient PCB concentrations are below the action levels.

7.3.9 Basis for the PCB Action Levels and Emission Controls

To ensure that the long-term average ambient PCB concentration of 64 ng/m^3 and the short-term 10-hour concentration of 1 $\mu g/m^3$ are not exceeded, a series of action levels will be set. Also, should these action levels be reached, the Remediation Contractor will be required to implement corrective action measures.

For long-term exposure, a three-step process will be followed to ensure that ambient concentrations are kept below 64 $\mu g/m^3$. First, if ambient concentrations are measured above 50 ng/m^3 (an action level set just below the allowable long-term concentration of 64 ng/m^3) in any one sampling event, the Remediation Contractor will be required to notify the Contracting Officer and to also provide an explanation of why the elevated ambient concentration was observed. One measurement at an action level of 50 ng/m^3 does not mean that the long-term concentration of 64 ng/m^3 will be exceeded, but it does warrant appropriate action.

The second step in the process to ensure that the long-term ambient concentration is acceptable is to take further action in the event that 50 ng/m^3 is observed in two or more sampling events. If this occurs, it is an indication that longer term concentrations could be elevated and that additional controls may be warranted. If this happens, the Remediation Contractor will be required to notify the Contracting Officer and propose operational changes, such as changing dredging rates, to control emissions. The Contracting Officer could then, at his or her discretion, require the operational changes to be made.

The third and final step in the process to control long-term ambient concentrations is to take further action should ambient concentrations of above 50 ng/m^3 be observed in more that 5 out of 10 sampling events. If this happens, it is an indication that some type of operational or physical emission controls may be needed. The Remediation Contractor will be required to take the same action as in the second step of the process but will also be required to provide a plan to implement physical emission

controls. The Contracting Officer could then, at his or her discretion, require the operational or physical controls to be made.

For short-term exposure, a two-step process will be followed to ensure that ambient concentrations are below the NIOSH 10-hour standard of 1 $\mu g/m^3$. First, if ambient concentrations of 0.5 $\mu g/m^3$ (one-half of the standard) are observed, the Remediation Contractor shall notify the Contracting Officer, explain why the elevated emissions were observed and also be prepared to implement immediate operational changes to control emissions. The second step is to implement physical emission controls, as well as operational controls, in the event that any ambient concentration reaches the 1 $\mu g/m^3$ standard.

7.4 Site Maintenance

Site maintenance throughout the remediation period must ensure compliance with the requirements for wastewater treatment systems and the requirements for hazardous waste management provided in 40 CFR 264, Subpart F (Releases from Solid Waste Management Units), Subpart G (Closure and Post Closure), Subpart N (Landfills), Subpart O (Incinerators) and the corresponding state regulations. The general requirements of these ARARs has been discussed periodically under Section 5.0. Discussed below are the specific items related to site maintenance.

7.4.1 Operations

During the period that the remediation is underway, the Remediation Contractor's activities will be conducted in compliance with the requirements for wastewater treatment systems and the requirements for hazardous waste management provided in 40 CFR 264, Subpart B (General Facility Standards), Subpart C (Preparedness and Prevention), Subpart D (Contingency Plan and Emergency Procedures) and Subpart E (Manifest System, Recordkeeping, and Reporting) and the corresponding state regulations. Specific requirements of these have already been outlined in Section 5.0.

7.4.2 Closure of Treatment System

As discussed previously, the proposed remedy for this operable unit includes dredging, wastewater treatment, incineration, ash handling, and placement of the ash material in the CDF and capping of the CDF. Many of the components of the system are temporary. The only facilities that will remain on-site after closure of the system are the decommissioned wastewater treatment plant and the capped and closed CDF. The other components of the remedy will be decommissioned, cleaned, and transported off-site. The wastewater treatment facility is being left on-site so that it may be incorporated into the remedy of other operable units, as appropriate.

As part of the Closure Plan for the remediation, after the Remediation Contractor has removed all temporary facilities from the site, a series of samples will be collected of the remediation area to ensure that the areas outside of the CDF are clean. As indicated in the specifications, the site will then be regraded and seeded to minimize erosion.

7.4.3 Post Closure

The requirement of post closure maintenance and monitoring will be the responsibility of USACE-NED. Presently, the USACE-NED is responsible for periodic monitoring of the existing monitoring wells around the CDF. No additional monitoring wells are proposed under this program. This monitoring will ensure that the material placed in the CDF is not leaching toward the estuary.

Another improvement of the CDF cell monitoring program will be the monitoring well placed in the center of the cell. This monitoring well is available for periodic monitoring of the volume of leachate that has collected in the cell. Increases in leachate volume would be indicative of rainfall penetrating through the cover. In addition, this monitoring well could be used as an extraction point to remove excess leachate, if

necessary. Under these conditions, the leachate could be treated on-site or trucked off-site for treatment.

The grass cover of the CDF and remediation area will also need to be maintained periodically. The USACE-NED will need to cut the grass periodically (anticipate at least monthly during the growing season). Also, the fence around the site will need to be maintained to ensure that unauthorized personnel do not enter the site. The wastewater treatment building and equipment will also need to be inspected periodically (anticipate monthly) to ensure that the equipment is maintained. Special maintenance requirements of equipment stored in the wastewater treatment building will be provided by the Remediation Contractor as a submittal during the review of the proposed equipment.

APPENDIX A

ERM TREATABILITY STUDY BACKGROUND INFORMATION

APPENDIX A

ERM TREATABILITY STUDY

1.0 ERM TREATABILITY STUDY

Previous work performed by the USACE identified a number of areas to be investigated further to provide necessary design information. These areas included:

- Would an inorganic chemical be more efficient at removing suspended solids?
- What would be the settling characteristics of this material?
- Could the suspended solids concentrations of the wastewater be better controlled?
- Would the performance of the carbon adsorption and UV/oxidation systems be improved with better suspended solids control?
- Which polishing system (carbon adsorption or UV/oxidation) would be more effective at achieving effluent goals?

This appendix details the procedures and methods that ERM used to perform the additional treatability studies required to address these questions. The studies evaluated sediment settling, flocculation, filtration, carbon adsorption and UV/oxidation systems to further develop detailed design requirements and allow the project to proceed in a timely fashion.

Although this study addressed only the treatability of the CDF elutriate, the results are applicable to the treatability of filtrate flows from sediment dewatering, since these wastewaters have similar characteristics. Incinerator blowdown may be treated separately by an evaporation

system which will be included as part of the incinerator and air pollution control system or will be treated with the treatment system separately from dredging flows.

2.0 OVERVIEW

The ERM Treatability Study involved a series of tests on sediment and water samples dredged by the USACE from the Hot Spot area. Sediment and water samples were collected (between December 17 and 20, 1990) by Normendeau Associates, subcontractor to USACE-NED, and forwarded to ERM's treatability laboratory in Exton, Pennsylvania. The approximate sample collection locations are shown by Figure A-1. Eight 30-gallon drums of sediment and water were forwarded to ERM. The drums were identified XY-Z by Normendeau Associates in the field, where X designates the area collected from, Y designates the sample and Z designates the number of the drum collected at that spot. Drums not used for the treatability study were used for the test burn. Tests were performed independently for each proposed wastewater treatment system unit process to determine optimum design parameters and establish operating conditions.

The treatability study was performed in two phases. The first phase consisted of settling, flocculation and filtration testing. This phase was performed from January 7 through 11, 1991 and focused on removing solids from the wastewater. The second phase focused on the dissolved PCBs. The second phase was performed from January 28 through 30, 1991, after the Phase 1 analytical data was reviewed. Review of the analytical data allowed the second phase of testing to evaluate subsequent treatment units using the most effective method of removing solids as determined in the Phase 1 studies. The second phase testing also verified data generated during the first phase.

The suspended solids contain a substantial portion of the PCBs and heavy metals in the wastewater. The subsequent treatment units (i.e., carbon adsorption or UV/oxidation) are more effective in removing dissolved PCBs and are adversely effected by elevated suspended solids concentrations.

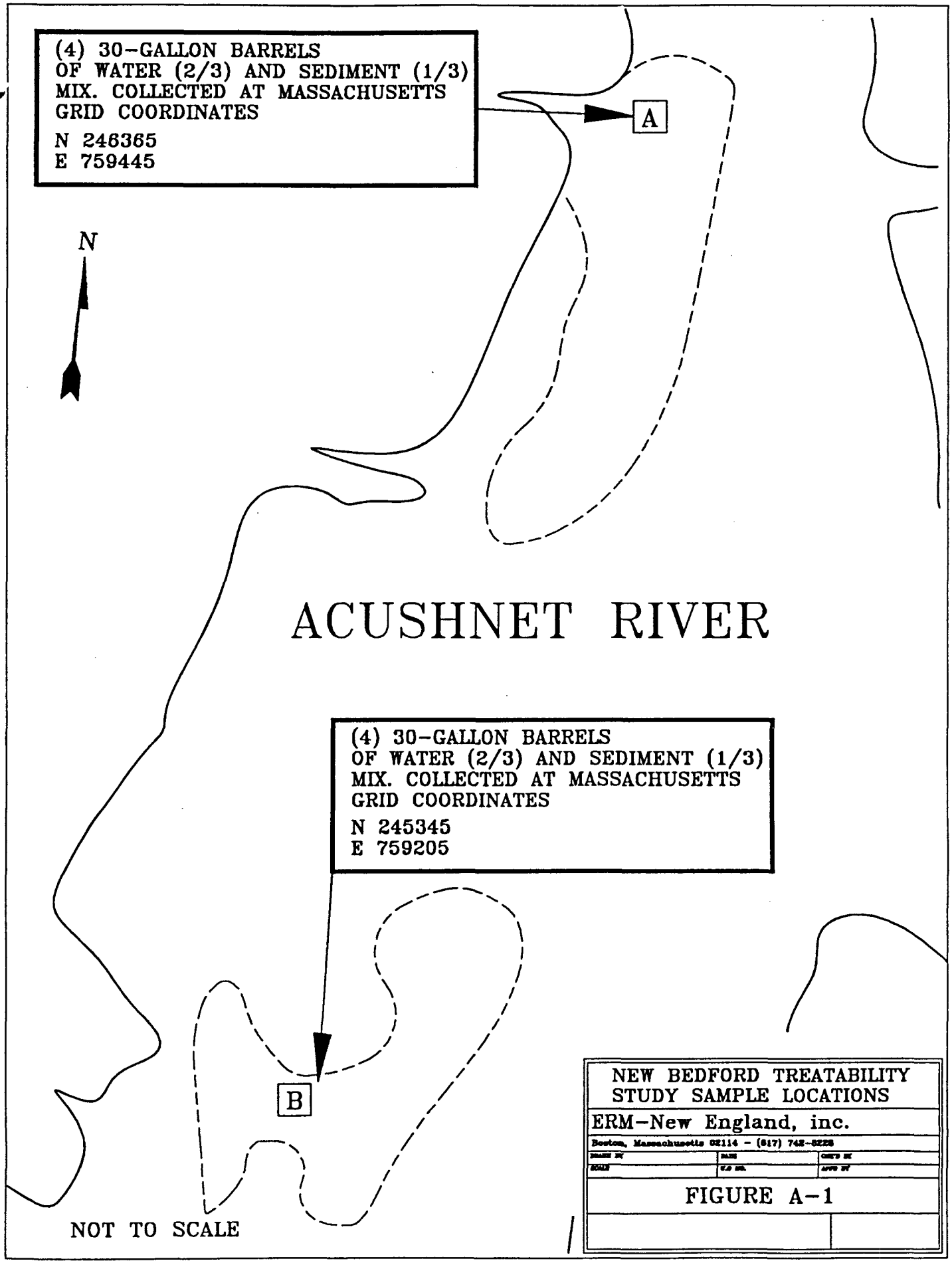
(4) 30-GALLON BARRELS
OF WATER (2/3) AND SEDIMENT (1/3)
MIX. COLLECTED AT MASSACHUSETTS
GRID COORDINATES
N 246365
E 759445
A
N
ACUSHNET RIVER
(4) 30-GALLON BARRELS
OF WATER (2/3) AND SEDIMENT (1/3)
MIX. COLLECTED AT MASSACHUSETTS
GRID COORDINATES
N 245345
E 759205
B
NOT TO SCALE
NEW BEDFORD TREATABILITY
STUDY SAMPLE LOCATIONS
ERM-New England, inc.
Boston, Massachusetts 02114 - (617) 742-5225
FIGURE A-1

Therefore, the ERM Treatability Study focused primarily on optimizing the removal of suspended material from the wastewater to ensure efficient and effective treatment of the dissolved PCBs using the subsequent treatment processes.

The results of the ERM Treatability Study are summarized below.

3.0 INITIAL DRUM CONCENTRATIONS

Drum No. B3-2 was thoroughly mixed and a representative sample collected for analyses to determine baseline concentrations for parameters of concern. The results of these analyses are presented in Table A-1. Additional sampling of other drum concentrations was not performed as the concentrations in this drum were determined to be consistent with previously collected field data for the Hot Spot Area.

3.1 Preparation of Elutriate

Representative samples simulating effluent characteristics from the CDF were prepared as follows:

1. Drum Nos. B3-4, A2-2, A2-4, and B3-3 were thoroughly mixed (for at least 5 minutes) and then allowed to settle for approximately 7 hours. Floating debris and oil was then removed from the liquid surface in these drums. Elutriate was then transferred from the four drums into a clean 55-gallon drum.

2. Prior to removing any elutriate samples from the composite 55-gallon drum, the drum was completely mixed for a minimum of five minutes using a tube mixer.

Contaminant concentrations in the elutriate 55-gallon composite drum are presented in Table A-2. The data indicates that the total suspended solids (TSS) concentrations in this drum are representative of elutriate after approximately two to three hours of settling. The elevated TSS values of

TABLE A-1
INITIAL DRUM CONCENTRATIONS

DRUM NUMBER	CONTAMINANT CONCENTRATION									
	PCB (µg/l)	Cd (µg/l)	Cr (6+) (µg/l)	Cu (µg/l)	Pb (µg/l)	Ni (µg/l)	Zn (µg/l)	PAH** (µg/l)	TSS (mg/l)	ALKALINITY (mg/l)
B3-2	26,000	3,080	7,340	68,600	38,100	6,270	17,600	23	64,840	368
SAMPLE NUMBER	IDC-1									
Blank	ND	ND	ND	ND	1	ND	4	ND	8	7
SAMPLE NUMBER	IDC-2									

** PAH VALUES BELOW QUANTITATION LIMITS

The ERM Group

TABLE A-2
ELUTRIATE DRUM CONCENTRATIONS

ELUTRIATE DRUM NUMBER	CONTAMINANT CONCENTRATION									
	PCB (µg/l)	Cd (µg/l)	Cr (6+) (µg/l)	Cu (µg/l)	Pb (µg/l)	Ni (µg/l)	Zn (µg/l)	PAH (µg/l)	TSS (mg/l)	ALKALINITY (mg/l)
1	810	17	264	694	762	730	1,940	3*	588	224
SAMPLE NUMBER	EDC-1									
1	940	15	257	754	690	210	2,230	6*	604	232
SAMPLE NUMBER	EDC-2									
1	16,800	NA	NA	NA	NA	NA	NA	NA	NA	NA
SAMPLE NUMBER	EDC-21									
2	49,000	9	201	708	719	216	2,080	128	557	NA
SAMPLE NUMBER	EDC-22									
2	49,000	10	200	661	783	150	1,990	87	525	NA
SAMPLE NUMBER	EDC-23									

* PAH VALUES BELOW QUANTITATION LIMITS

The ERM Group

the elutriate composite drum likely resulted from collecting elutriate samples from close to the interface of the settled sediments. The elevated solids in the treatability study will be more representative of system operation as the CDF fills up with solids.

3.2 Floating Oil Removal

Subsequent to the performance of the treatability studies the USEPA Narragansett Laboratory, working for the USACE-NED, performed analyses of the floating oil generated during removal of PCB-contaminated sediments. These tests indicated that the floating oil contained high concentrations (better than 50%) PCBs. To reduce the PCB concentrations in subsequent wastewater treatment steps, in addition to minimizing volatilization of PCBs from the CDF, the floating PCB material should be removed immediately from the wastewater. We currently envision that floating absorbant booms will be placed on the CDF to collect this material.

4.0 PHASE 1 TESTING

4.1 Initial Settleability Test

After mixing drum No. B3-2 completely, two samples were drawn and placed in 1-liter graduated cylinders. The completely mixed samples were then allowed to gravity settle with the solids/liquid interface level monitored versus time. The interface levels are presented in Table A-3, and a plot of the interface level versus time is provided as Figure A-2.

Each time an interface level was recorded, a sample was drawn from drum No. B3-2 at a level above the interface. These samples were then analyzed for total suspended solids concentrations. Plots of total suspended solids in the elutriate versus time are presented as Figures A-3 and A-4.

4.2 Chemical Addition/Flocculation

Flocculation tests were performed in two stages. The first stage identified flocculant and polymer doses effective at removing solids based on visual

TABLE A-3
INITIAL SETTLING CHARACTERISTICS

APPROXIMATE ELAPSED TIME	TIME	ACTUAL ELAPSED TIME (MIN/HRS)	PARAMETER	SAMPLE NO.	COMMENTS
0 MIN.	8:16	0	SUPERNATANT (TSS)	ISC-0	64,840
			INTERFACE LEVEL (ML)	1,000	1,000
5 MIN.	8:20	4	SUPERNATANT (TSS)	ISC-5	-
			INTERFACE LEVEL (ML)	800	800
10 MIN.	8:26	10	SUPERNATANT (TSS)	ISC-10	-
			INTERFACE LEVEL (ML)	650	650
15 MIN.	8:31	15	SUPERNATANT (TSS)	ISC-15	-
			INTERFACE LEVEL (ML)	560	560
30 MIN.	8:46	30	SUPERNATANT (TSS)	ISC-30	2,410
			INTERFACE LEVEL (ML)	470	470
45 MIN.	9:01	45	SUPERNATANT (TSS)	ISC-45	-
			INTERFACE LEVEL (ML)	430	430
1 HR.	9:16	1	SUPERNATANT (TSS)	ISC-60	660
			INTERFACE LEVEL (ML)	410	410
2 HR.	10:16	2	SUPERNATANT (TSS)	ISC-120	460
			INTERFACE LEVEL (ML)	360	360
3 HR.	11:16	3	SUPERNATANT (TSS)	ISC-180	300
			INTERFACE LEVEL (ML)	340	340
4 HR.	-	-	SUPERNATANT (TSS)	ISC-240	-
			INTERFACE LEVEL (ML)	-	-
5 HR.	1:24	5.125	SUPERNATANT (TSS)	ISC-300	236
			INTERFACE LEVEL (ML)	320	320
6 HR.	2:16	6	SUPERNATANT (TSS)	ISC-360	180
			INTERFACE LEVEL (ML)	315	315
7 HR.	2:16	7	SUPERNATANT (TSS)	ISC-420	236
			INTERFACE LEVEL (ML)	310	310
8 HR.	4:16	8	SUPERNATANT (TSS)	ISC-480	232
			INTERFACE LEVEL (ML)	310	310
9 HR.			SUPERNATANT (TSS)	ISC-540	220
			INTERFACE LEVEL (ML)	-	-

FIGURE A-2
HOT SPOT SEDIMENT INTERFACE LEVEL VS. TIME

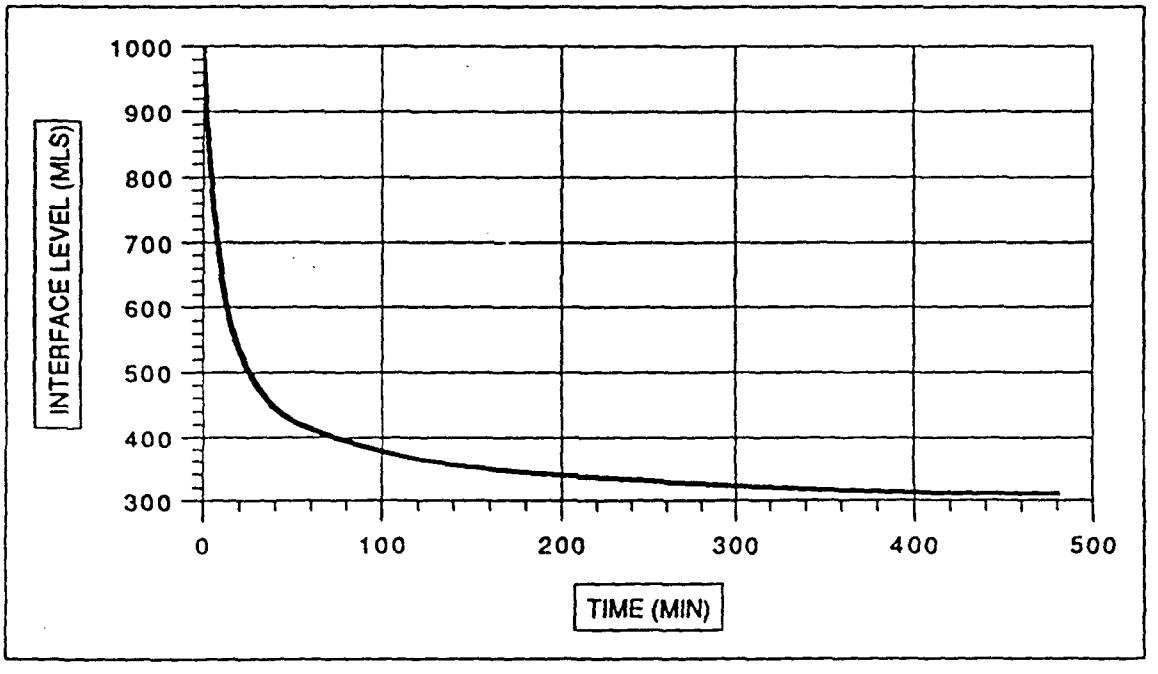

The ERM Group

FIGURE A-3
ELUTRIATE TOTAL SUSPENDED SOLIDS VS. TIME

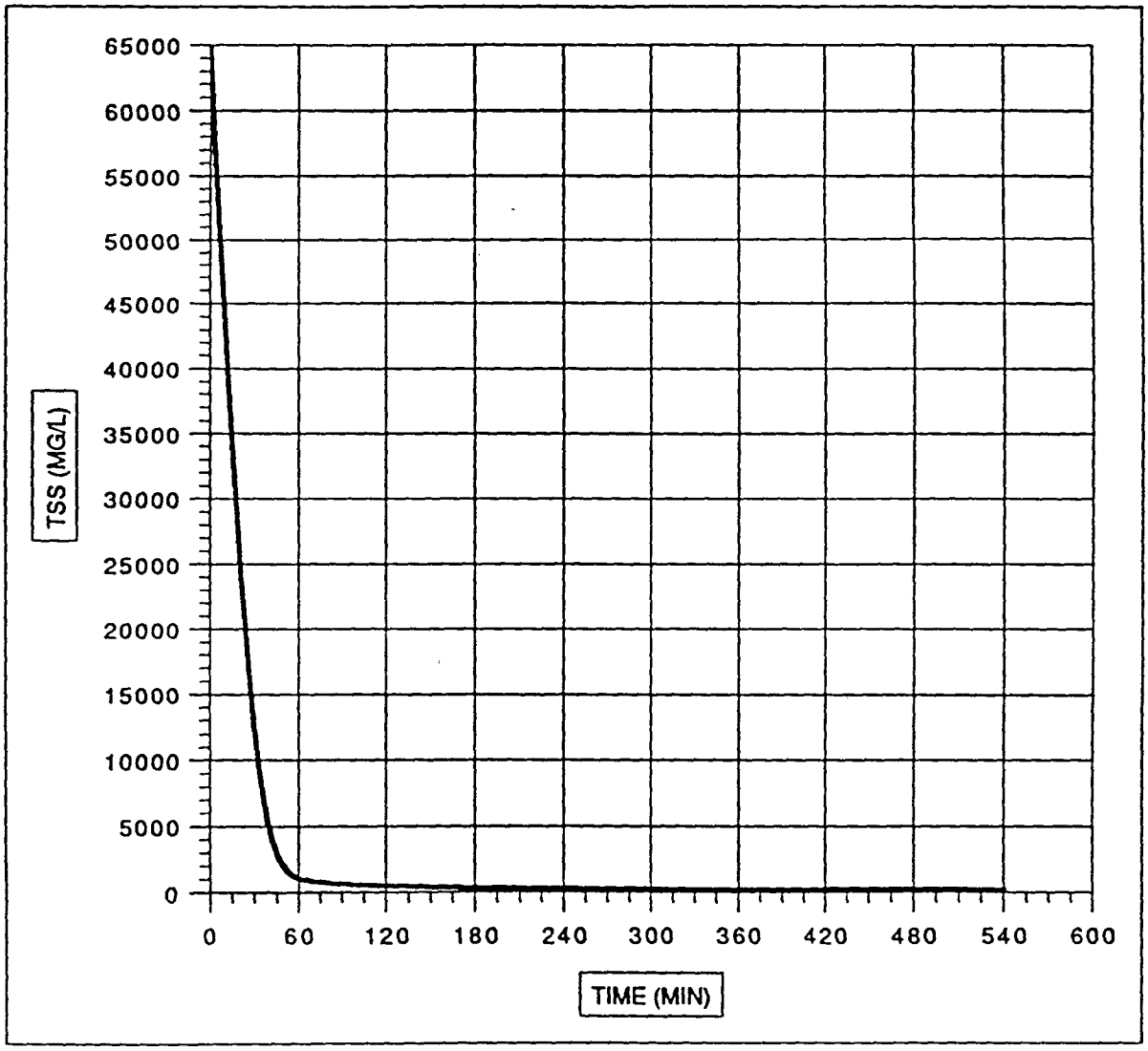

Refer to Figure A-4 for detailed information beyond 30 minutes.

The ERM Group

FIGURE A-4
ELUTRIATE TOTAL SUSPENDED SOLIDS VS. TIME

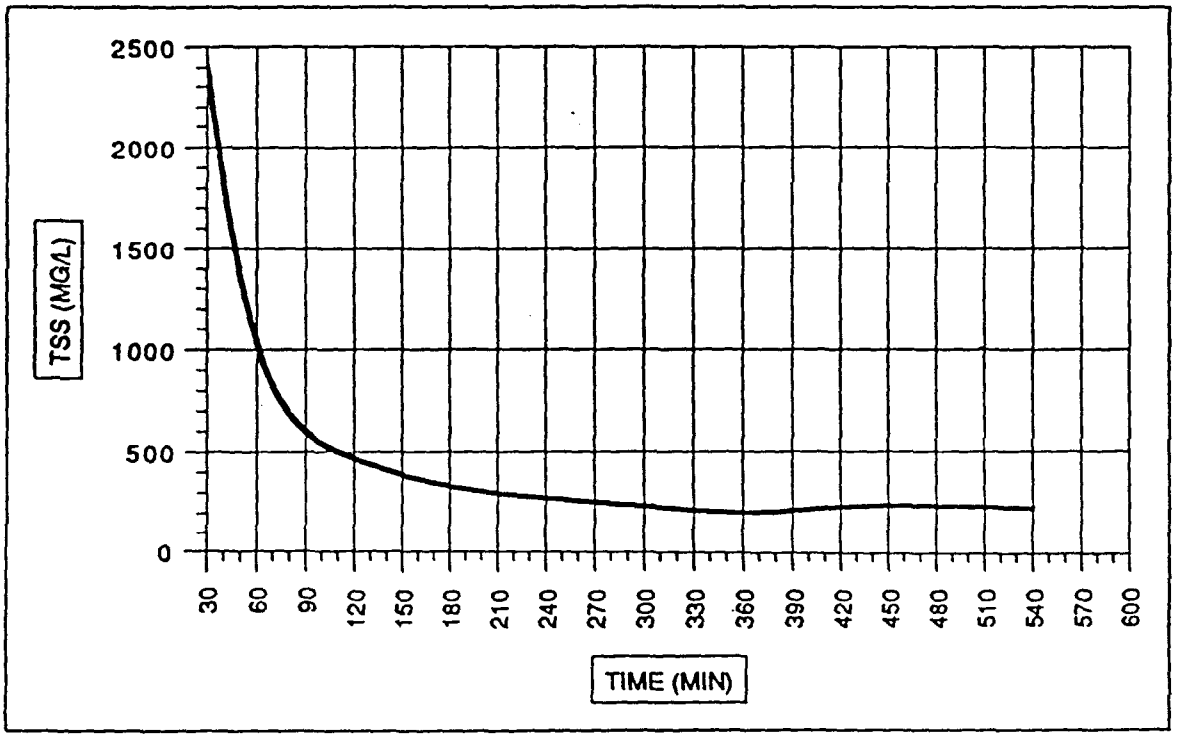

The ERM Group

observation of the samples after settling. The second stage involved optimizing flocculant and polymer doses identified in the first stage and to confirm the visual determinations with analytical results.

4.3 Stage 1 Flocculation Tests

During the first stage flocculation tests the following polymers and flocculants were evaluated:

1. Cat-Floc TS (Calgon)
2. Cat-Floc LS (Calgon)
3. Magnifloc 1596C (American Cyanamid)
4. Magnifloc 1598C (American Cyanamid)
5. Magnifloc 1839A (American Cyanamid)
6. Alum
7. Ferric Chloride
8. Lime
9. Ferrous Sulfate

During the first stage flocculation test various combinations of selected polymers and inorganic coagulants were evaluated. Synthetic polymer and inorganic chemical combinations of various dosages were mixed with elutriate samples to evaluate effectiveness. Flocculants were added to the beakers filled with elutriate and the solutions mixed at approximately 100 rpm for a minimum of 15 seconds to simulate rapid mixing. Samples were then flocculated for fifteen minutes using a Philipps and Bird paddle mixer turning at approximately 6 rpm. After flocculation, the solutions were allowed to settle for approximately fifteen minutes. At the end of the fifteen minute settling time, the samples were visually evaluated to determine removal effectiveness.

Inorganic chemicals were evaluated individually, as well as in combinations with the most promising polymers. Organic polymers tend to foul micro-filtration unit membranes (considered as a part of the treatment process). Therefore emphasis was placed on identifying

efficient inorganic polymer doses. The results of the visual observations of the various doses of inorganic polymers are summarized in Table A-4.

4.4 Stage 2 Flocculation Tests

During the final Stage 2 flocculation tests, elutriate samples were dosed with the flocculants in concentrations determined to be effective during the Stage 1 settling tests. Solutions were flocculated and then settled for a period of fifteen minutes. Supernatant was carefully decanted from each beaker to minimize resuspension of settled material. To generate sufficient decant sample for the required analytical analyses, three 1,000 ml beakers were required for each flocculant dose. The decants were then mixed and the combined solution used for the required analytical analyses.

Initial chemical dosages, final suspended solids and other specified data for each flocculant dose are presented as Runs 1 through 14 in Table A-5.

4.5 Filtration

The filtration analyses were designed to simulate sand filter and microfilter effectiveness in reducing solids concentrations for clarified wastewaters.

Samples were dosed with the appropriate concentrations of flocculant. Initial values of the contaminant concentrations are indicated in Table A-5. Supernatant samples from the settled samples were prepared and filtered through membranes with 10 (representative of sand filters) and 2.5 (representative of microfilters) micron particle retention. The 10 micron filter was fabricated with nylon while the 2.5 micron filter was fabricated with glass fibers. Glass fiber filters are preferred as they minimize the amount of PCBs absorbed onto the filter media. However, nylon filters were used when glass filters were unavailable. The results of these tests are presented in Table A-6.

Laboratory notes prepared during the filtration tests indicate that approximately 1,300 mls of sample were filtered through the 2.5 micron

TABLE A-4
PRELIMINARY FLOCCULANT ADDITION OBSERVATIONS

	FLOCCULANT ADDITION					POLYMER ADDITION							
ELUTRIATE DRUM NO.	FLOCCULANT ADDED	CONC. OF FLOCC. ADDED (MG/L)	FLOCCULANT VOLUME	SOLUTION VOLUME	FINAL DOSING RATE (ppm)	POLYMER ADDED	CONCENTRATION OF POLYMER ADDED	POLYMER VOLUME	SOLUTION VOLUME	FINAL DOSING RATE	RAPID SPEED TIME (SEC) FULL SPEED	FLOCC. MIX TIME (MIN) 6 RPM	OBSERVATIONS
1	ALUM	1%	1 ml	1000 ml	ERR 9	-	-	-	-	-	15	15	SUPERNATENT NOT CLEAR
1	ALUM	1%	2 ml	1000 ml		-	-	-	-	-	15	15	SUPERNATENT NOT CLEAR
1	ALUM	1%	5 ml	1000 ml		-	-	-	-	-	15	15	BULKY SLUDGE GOOD FLOC FORMATION
1	ALUM	1%	10 ml	1000 ml		-	-	-	-	-	15	15	BULKY SLUDGE SUPERNATENT NOT CLEAR
1	ALUM	1%	20 ml	1000 ml		-	-	-	-	-	15	15	SUPERNATENT NOT CLEAR BULKY FLOC
1	ALUM	1%	50 ml	1000 ml		-	-	-	-	-	15	15	SUPERNATENT NOT CLEAR OVERDOSE
1	FERRROUS SULFATE	1%	1 ml	1000 ml		-	-	-	-	-	15	15	NO FLOC FORMATION SUPERNATENT NOT CLEAR
1	FERRROUS SULFATE	1%	2 ml	1000 ml		-	-	-	-	-	15	15	NO FLOC FORMATION SUPERNATENT NOT CLEAR
1	FERRROUS SULFATE	1%	5 ml	1000 ml		-	-	-	-	-	15	15	NO FLOC FORMATION SUPERNATENT NOT CLEAR
1	FERRROUS SULFATE	1%	10 ml	1000 ml		-	-	-	-	-	15	15	NO FLOC FORMATION SUPERNATENT NOT CLEAR
1	FERRROUS SULFATE	1%	20 ml	1000 ml		-	-	-	-	-	15	15	NO FLOC FORMATION SUPERNATENT NOT CLEAR
1	FERRROUS SULFATE	1%	50 ml	1000 ml		-	-	-	-	-	15	15	NO FLOC FORMATION SUPERNATENT NOT CLEAR
1	FERRROUS SULFATE	1%	20 ml	1000 ml		-	-	-	-	-	15	15	NO FLOC FORMATION SUPERNATENT NOT CLEAR
1	FERRROUS SULFATE	1%	30 ml	1000 ml		-	-	-	-	-	15	15	NO FLOC FORMATION SUPERNATENT NOT CLEAR
1	LIME	1%	1 ml	1000 ml		-	-	-	-	-	15	15	NO FLOC
1	LIME	1%	2 ml	1000 ml		-	-	-	-	-	15	15	NO FLOC
1	LIME	1%	5 ml	1000 ml		-	-	-	-	-	15	15	NO FLOC
1	LIME	1%	10 ml	1000 ml		-	-	-	-	-	15	15	PIN FLOC FORMATION
1	LIME	1%	20 ml	1000 ml		-	-	-	-	-	15	15	PIN FLOC FORMATION CLEAR SUPERNATENT
1	LIME	1%	50 ml	1000 ml		-	-	-	-	-	15	15	BULKY SLUDGE CLEAR SUPERNATENT
1	LIME	1%	20 ml	1000 ml		-	-	-	-	-	15	15	WELL SETTLED SLUDGE CLEAR SUPERNATENT
1	LIME	1%	25 ml	1000 ml		-	-	-	-	-	15	15	CLEAREST LIME SUPERNATENT
1	LIME	1%	30 ml	1000 ml		-	-	-	-	-	15	15	CLEAREST LIME SUPERNATENT
1	LIME	1%	40 ml	1000 ml		-	-	-	-	-	15	15	CLEAR SUPERNATENT - GREATER VISIBLE SUSPENDED SOLIDS
1	FERRIC CHLORIDE	40%	5 ml	1000 ml		-	-	-	-	-	15	15	FINE FLOC MURKY SUPERNATENT
1	FERRIC CHLORIDE	40%	10 ml	1000 ml		-	-	-	-	-	15	15	FINE FLOC MURKY SUPERNATENT
1	FERRIC CHLORIDE	40%	1ml	1000 ml		-	-	-	-	-	15	15	RAPID SETTLING SUPERNATENT NOT CLEAR
1	FERRIC CHLORIDE	40%	2 ml	1000 ml		-	-	-	-	-	15	15	OVERDOSE
1	FERRIC CHLORIDE	40%	3 ml	1000 ml		-	-	-	-	-	15	15	OVERDOSE
1	FERRIC CHLORIDE	40%	0.2 ml	1000 ml		-	-	-	-	-	15	15	CLEAR SUPERNATENT, BULKY FLOC SLIGHTLY YELLOW SUPERNATENT
1	FERRIC CHLORIDE	40%	0.3 ml	1000 ml		-	-	-	-	-	15	15	CLEAR SUPERNATENT, BULKY FLOC SLIGHTLY YELLOW SUPERNATENT
1	FERRIC CHLORIDE	40%	0.5 ml	1000 ml		-	-	-	-	-	15	15	POOR SETTLING
1	FERRIC CHLORIDE	1%	1 ml	1000 ml		-	-	-	-	-	15	15	CLEAR SUPERNATENT BULKY FLOC
1	FERRIC CHLORIDE	1%	2 ml	1000 ml		-	-	-	-	-	15	15	OVERDOSE
1	FERRIC CHLORIDE	1%	0.5 ml	1000 ml		-	-	-	-	-	15	15	POOR SETTLING

TABLE A-5
FLOCCULANT ADDITION WORKSHEET

	FLOCCULANT ADDITION					POLYMER 1 ADDITION					POLYMER 2 ADDITION					
RUN NO.	FLOCCULANT ADDED	FLOCCULANT CONCENTRATION (GM/L)	FLOCCULANT VOLUME (ML)	SOLUTION VOLUME (ML)	FINAL DOSING RATE (PPM)	POLYMER ADDED	POLYMER CONCENTRATION (GM/L)*	POLYMER VOLUME (ML)	SOLUTION VOLUME (ML)	FINAL DOSING RATE (PPM)	POLYMER ADDED	POLYMER CONCENTRATION (GM/L)	POLYMER VOLUME (ML)	SOLUTION VOLUME (ML)	FINAL DOSING RATE (PPM)	RAPID SPEED TIME (SEC)
1	ALUM	5.13	5	1005	26	-	-	-	-	-	-	-	-	-	-	15
2	ALUM	5.13	10	1010	51	-	-	-	-	-	-	-	-	-	-	15
3	LIME	9.96	20	1020	195	-	-	-	-	-	-	-	-	-	-	15
4	LIME	9.96	30	1030	290	-	-	-	-	-	-	-	-	-	-	15
5	LIME	9.96	25	1025	243	-	-	-	-	-	-	-	-	-	-	15
6	BLANK	-	-	-		-	-	-	-	-	-	-	-	-	-	15
7	LIME	9.96	40	1040	383	-	-	-	-	-	-	-	-	-	-	15
8	Fe(Cl)3	6.00	1	1001	6	-	-	-	-	-	-	-	-	-	-	15
9	Fe(Cl)3	6.00	1.5	1001.5	9	-	-	-	-	-	-	-	-	-	-	15
10	Fe(Cl)3	6.00	0.8	1000.8	5	-	-	-	-	-	-	-	-	-	-	15
11	ALUM	5.00	5	1005	25	MAGNIFLOC 1596 C	10.00	1	1006	9.94	-	-	-	-	-	15
12	ALUM	5.00	5	1005	25	CATFLOC LS	10.00	1	1006	9.94	-	-	-	-	-	15
13	LIME	9.96	25	1025	243	CATFLOC TL	10.00	1	1026	9.75	-	-	-	-	-	15
14	LIME	9.96	25	1025	243	MAGNIFLOC 1598 C	10.00	1	1026	9.75	MAGNIFLOC 1839 A	0.01	1	1000	0.01	15
15	ALUM	5.00	10	1010	49	-	-	-	-	-	-	-	-	-	-	15
16	ALUM	5.00	5	1005	25	MAGNIFLOC 1596 C	10.00	10	1015	98.52	-	-	-	-	-	15
17	ALUM	5.00	5	1005	25	CATFLOC LS	10.00	10	1015	98.52	-	-	-	-	-	15
18	ALUM	5.00	5	1005	25	-	-	-	-	-	-	-	-	-	-	15

The ERM Group

TABLE A-5 (CONT.)
FLOCCULANT ADDITION WORKSHEET

RUN NO.	SAMPLING TIME (MIN)	CONTAMINANT CONCENTRATION TSS (MG/L)	PCB (µg/L)	Cd (µg/L)	Cu (µg/L)	Cr(+6) (µg/L)	Pb (µg/L)	Ni (µg/L)	Zn (µg/L)	Al (µg/L)	PAH** (µg/L)	TDS (MG/L)	pH	ALKANITY (MG/L)
1	15	5	320	5	3	6	7.1	23	51	NT	4	25,651	6.6	192
	SAMPLE NO.	FA-1												
2	15	13	190	5	3	6	11	19	51	NT	4	25,310	6.3	144
	SAMPLE NO.	FA-2												
3	15	285	80	5	10	8	18	22	81	NT	5	24,895	8.9	112
	SAMPLE NO.	FA-3												
4	15	323	67	5	11	6	16	17	48	NT	6	24,688	9.3	120
	SAMPLE NO.	FA-4												
5	15	338	51.9	5	15	6	11	17	56	NT	2	24,966	NT	176
	SAMPLE NO.	FA-5												
6	15	5	ND	5	3	6	1	17	5	NT	ND	5	NT	4
	SAMPLE NO.	FA-6												
7	15	376	67	5	7	6	6.4	17	57	NT	3	24,525	NT	162
	SAMPLE NO.	FA-7												
8	15	31	105	5	11	6	11	17	82	NT	ND	25,437	NT	172
	SAMPLE NO.	FA-8												
9	15	36	96	5	17	6	9.3	21	98	NT	ND	25,318	NT	184
	SAMPLE NO.	FA-9												
10	15	35	45.9	5	15	6	10	27	92	NT	ND	25,427	NT	200
	SAMPLE NO.	FA-10												
11	15	5	62	5	7	6	6.4	24	81	NT	ND	25,507	NT	168
	SAMPLE NO.	FA-11												
12	15	18	186	5	12	6	5	21	70	NT	1	25,587	NT	172
	SAMPLE NO.	FA-12												
13	15	248	47	5	12	6	9.8	17	27	NT	2	24,762	NT	100
	SAMPLE NO.	FA-13												
14	15	241	43	5	8	6	7.6	17	30	NT	2	24,879	NT	108
	SAMPLE NO.	FA-14												
15	15	41	2,400	3	11	7	8	14	58	3,220	12	NT	NT	NT
	SAMPLE NO.	FA-23												
16	15	60	3,200	3	14	6	17	22	66	846	NT	NT	NT	NT
	SAMPLE NO.	FA-24												
17	15	47	3,200	5	17	8	11	18	76	987	NT	NT	NT	NT
	SAMPLE NO.	FA-25												
18	15	49	222/2800	5	15	11	9.4	20	66	1,070	NT	NT	NT	NT
	SAMPLE NO.	FA-26												

The ERM Group

TABLE A-6
FILTRATION WORKSHEET

RUN NO.	FLOCCULANT ADDED	FLOCCULANT CONCENTRATION (GM/L)	FLOCCULANT VOLUME (ml)	SOLUTION VOLUME (ml)	INITIAL TSS (mg/l) *	FILTER SIZE	FINAL TSS (mg/l)	PCB (mg/l)	METALS (µg/l) Cd	Cr**	Cu	Pb	Ni	Zn	Al	Fe	PAH	TDS (mg/l)	Alkalinity (mg/l)
1	ALUM	5	5	1005	5	2.5 microns	9	73	5	6	7	4	18	74	NT	NT	ND	25,009	102
							FI-1												
2	ALUM	5	5	1005	5	10.0 micron	9	46.2	5	6	6	4	22	47	NT	NT	ND	25,243.5	176
							FI-2												
3	Fe(Cl)3	6	1	1001	31	2.5 microns	5	94.9	5	6	9	5	31	49	NT	NT	ND	24,992	168
							FI-3												
4	Fe(Cl)3	6	1	1001	31	10.0 micron	5	51.2	5	6	18	3	26	58	NT	NT	ND	25,495	192
							FI-4												
5	ALUM	5	-	-	31	2.5 microns	22	79.9	3	6	3	2	13	45	126	11,500	ND	NT	NT
							FI-21												

* Initial Total Suspended Solids concentrations calculated from Table 5 values.
** Chromium values are totals except FI-2 (CR(6+))
NT - Sample not taken

The ERM Group

filter before it clogged. A coarse filter (10 micron) will be required prior to the 2.5 micron filter to minimize premature fouling of the filter. A coarse filter will increase the period of time required between 2.5 micron filter changeout.

5.0 PHASE 2 TESTING

5.1 UV/Oxidation

The UV/oxidation tests were performed by Peroxidation Systems Inc. of Tucson Arizona. Samples were prepared from the remaining elutriate in Elutriate Drum No. 1 by dosing the drum contents with approximately 15 ppm (as aluminum sulfate) of alum. The elutriate drum was rapid mixed for 15 seconds and then flocculated for approximately 15 minutes. The drum contents were then allowed to settle for 15 minutes. The supernatent was decanted and filtered through a 2.5 micron glass fiber filter. The treatability study indicated that UV/oxidation was capable of reducing the total PCB concentration in the wastewater to below detection limits. Additional experience by the vendor indicates that PCB removal to 0.6 ppb levels will be achieved. In addition, the study indicated that pretreatment to control iron concentrations will be required. The full details of the UV/oxidation testing are included as Appendix B.

5.2 Flocculation Study Verification

During this phase of the testing a new elutriate drum was prepared by combining the supernatant from Drums No. A2-1, A2-3, and B3-1. The concentrations of contaminants in this combined elutriate drum are presented in Table A-2.

Additional flocculation tests were performed using flocculants determined to be effective during the Phase 1 tests. The results of these tests, and the flocculant doses used, are presented as Runs 15 through 18 in Table A-5.

During Phase 1 testing samples collected had low PCB concentrations and high TSS concentrations as shown on Figure A-5. Since PCBs have a high

FIGURE A-5
PCB AND TSS CONCENTRATIONS IN CLARIFIED SAMPLES

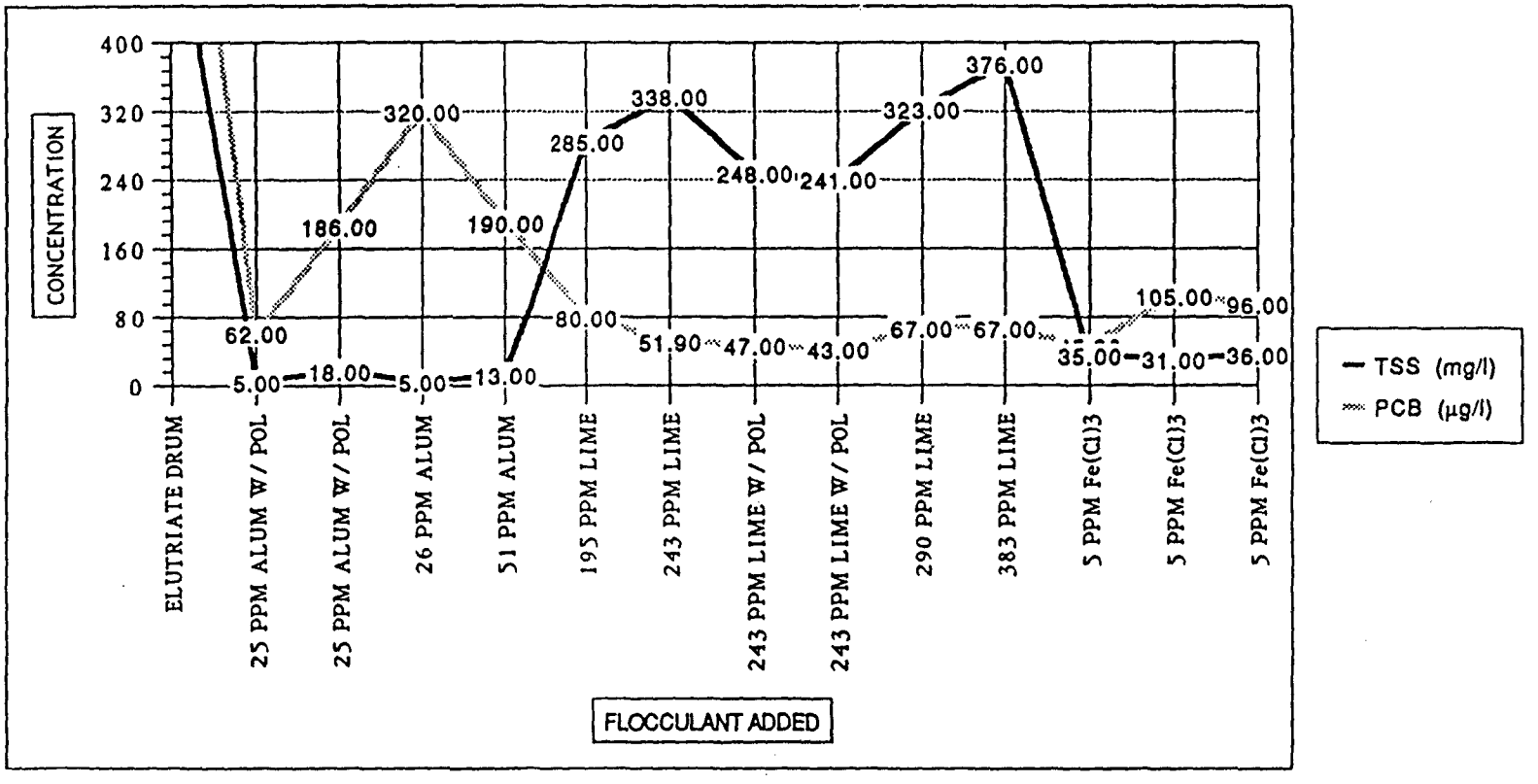

affinity for solids, this would imply that as TSS concentrations in the samples increase so would PCB concentrations. A laboratory analysis procedure was the suspected cause of this data. The laboratory performing the analysis indicated that the sample bottles were allowed to sit for approximately one week prior to analysis and then the sample for analysis was obtained by decanting the sample bottle. This procedure could explain the results seen during the Phase 1 testing.

In order to verify this hypothesis, two tests were performed during the Phase 2 testing. First, samples from elutriate drum No. 1 were taken and shaken prior to analysis. The PCB concentrations in the shaken sample are presented in Table A-2. Second, duplicate samples were taken and the laboratory was instructed to decant one sample and shake the other prior to analysis. The higher PCB concentrations in the shaken samples indicated a portion of the total PCBs were adhering to solids that settled out of the sample during the week between sample collection and analysis. All subsequent PCB samples were shaken prior to analysis to ensure that PCB concentrations in these samples were accurate.

Analyses were also performed for aluminum concentrations in the settled effluent to determine if using aluminum sulfate as a flocculant would not cause aluminum concentrations to exceed acceptable values.

5.3 Carbon Adsorption

Carbon adsorption tests were performed on elutriate treated with 25 ppm (as aluminum sulfate) of alum and filtered through a 2.5 micron glass fiber filter. The PCB concentration of the samples used during this test averaged 127.5 ppb. Powdered activated carbon was then added to seven 1,000 ml beakers at various doses and mixed with the wastewater for approximately 18 hours. The solutions were then filtered through a 2.5 micron filter to remove the carbon and then analyzed for PCB content. The results of these tests are presented in Table A-7 and a plot of the isotherm generated is shown as Figure A-6. As indicated, the isotherm indicates that PCB removal to anticipate discharge limits (0.6 ppb) will require large doses of activated carbon. It is believed that the need for large quantities

TABLE A-7
CARBON ADDITION WORKSHEET

SAMPLE NUMBER	BEAKER VOLUME (ML)	CARBON DOSE (MG/L)	INITIAL PCB CONCENTRATION (Co)(mg/l)	FINAL PCB CONCENTRATION (Cf)(mg/l)	mg PCB ADSORBED/ gm CARBON (Co-Cf)/M	PCB REMOVED (Co-Cf)(mg/l)
C-00	1000	0	0	0.0062	-	-
C-1	1000	1	0.1275	0.0646	62.90	0.0629
C-2.5	1000	3.5	0.1275	0.0635	18.29	0.064
C-10	1000	16	0.1275	0.0604	4.19	0.0671
C-50	1000	54.4	0.1275	0.053	1.37	0.0745
C-100	1000	180.9	0.1275	0.0528	0.41	0.0747
C-250	1000	263.8	0.1275	0.037	0.34	0.0905
C-500	1000	530.8	0.1275	0.0408	0.16	0.0867

The ERM Group

FIGURE A-6
CARBON ISOTHERM

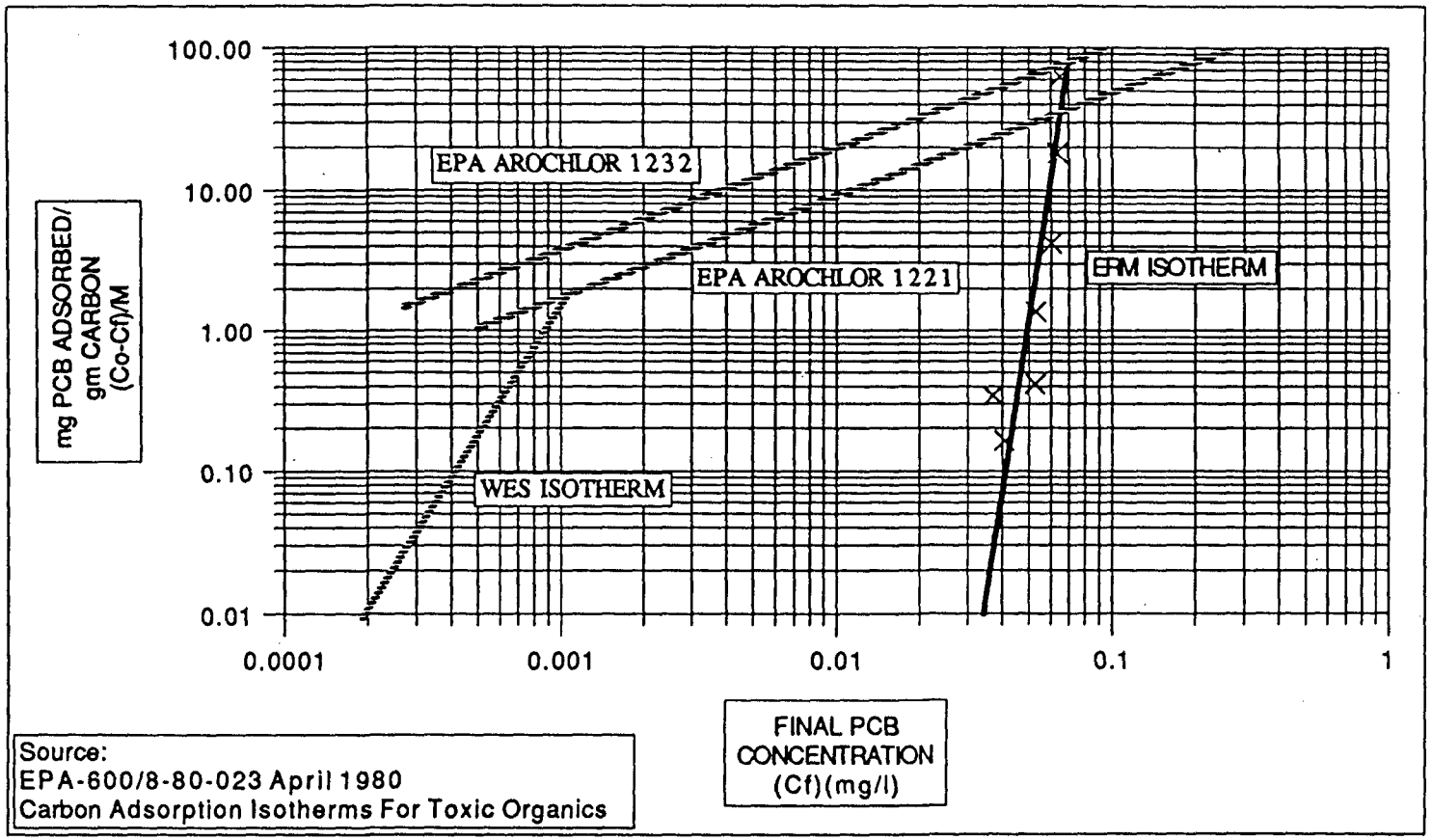

Source:
EPA-600/8-80-023 April 1980
Carbon Adsorption Isotherms For Toxic Organics

of activated carbon to achieve the anticipated discharge limit (0.6 ppb PCBs) results from PCB adherence to minute solid particles that remain in solution after filtration.

APPENDIX B

PEROXIDATION SYSTEMS, INC.
UV/OXIDATION DESIGN STUDY

APR 1 1991

March 28, 1991

Mr. Bill Breed
ERM - New England
205 Portland Avenue
Boston, Massachusetts 02114

Re: Bench-Scale Treatability Study
New Bedford Superfund Site
Project #TMM-9102-5381

Dear Mr. Breed:

Peroxidation Systems, Inc. (PSI) was contracted by ERM - New England (ERM) to perform a treatability study on contaminated surface water using the **perox-pure™** Process. The surface water reportedly contained 320 μg/l of PCBs. The specified treatment objective was the destruction of PCBs to 1 μg/l.

A bench-scale **perox-pure™** treatability study was performed on the surface water in early February of 1991. The study was performed at the PSI Testing Laboratory in Tucson, Arizona. The purpose of the study was to provide a range of data from which full-scale treatment criteria could be determined. A copy of the bench-scale testing report is enclosed.

The surface water received by PSI was turbid orange with high iron and suspended solids concentrations. Since the iron and solids concentrations were at levels which would hinder the **perox-pure™** reaction and foul the quartz tubes in the **perox-pure™** equipment, pretreatment was effected via gravity filtration. After filtration, the suspended solids concentration was negligible and the iron concentration in the surface water was less than 1 mg/l.

A series of bench-scale tests were conducted on the contaminated surface water at a variety of oxidation times, H_2O_2 dosages and pH values. Determination of the best treatment conditions was not possible because the PCBs were destroyed to below the 5 μg/l analytical detection limit in every treated sample. However, PCB oxidation was rapid with destruction to below the detection limit occurring within 0.5 minutes in some cases.

Based upon the bench-scale results, and previous treatability studies conducted by PSI on PCB laden waters, a full-scale contact time of 1.4 minutes is projected to meet the specified treatment criteria. A **perox-pure™** Model CWB 360 will provide the necessary contact time at the anticipated full-scale surface water flow rate of 350 gpm. A specification sheet for the CWB 360 is enclosed for your information.

I understand that ERM plans to rent the **perox-pure™** treatment equipment for a period of four months in the spring of 1992. While PSI will make every effort to meet this schedule, it is not possible to reserve a CWB 360 for such a short period of time. The **perox-pure™** equipment is therefore subject to availability.

Peroxidation Systems Inc.
5151 E. Broadway, Suite 600 Tucson, Arizona 85711 602-790-8383 FAX 602-790-8008

The rental fee for the **perox-pure™** Model CWB 360 including the hydrogen peroxide (H_2O_2) feed module and complete service/maintenance of the equipment by PSI is $15,000 per month. The usage of PSI H_2O_2 solution would also be billed each month. A fee of $15,000 would apply for equipment mobilization, and an additional $15,000 when the equipment is removed.

In comparison to the rental fees, purchase of the CWB 360 would involve a capital investment of approximately $350,000 as well as additional fees for repair/maintenance parts and labor. The mobilization and demobilization fees would also apply.

For an PCB effluent concentration of 0.6 μg/l, a CWB-405/360 would be required. The capital cost for this unit is approximately $15,000 more than the CWB-360 quoted above.

Bill, thank you for the opportunity to demonstrate the capabilities of the **perox-pure™** Process in treating the contaminated s urface water at the New Bedford Site. If you need any additional information, or if you have any questions concerning the treatability study or the **perox-pure™** equipment, please feel free to call Mike Donaway at (201)276-0044 or myself.

Sincerely,

Kathy J. Kent
Applications Engineer

KJK:cw
Enclosure

cc: Fred Bernardin, PSI
Mike Donaway, PSI
Geoff Swett, PSI
PSI File

CONFIDENTIAL TESTING REPORT

DESTRUCTION OF ORGANIC CONTAMINANTS IN SURFACE WATER WITH THE perox-pure™ PROCESS

for

ERM-New England
Boston, Massachusetts
Purchase Order No. 20801-04

by

Peroxidation Systems, Inc.
5151 E. Broadway, Suite 600
Tucson, Arizona 85711

February 27, 1991

The information contained in this report includes descriptions and procedures which are confidential to Peroxidation Systems, Inc. The report shall not be copied nor released to third parties without prior approval from Peroxidation Systems, Inc.

TABLE OF CONTENTS

		Page
1.0	INTRODUCTION	1
2.0	TESTING PROCEDURES	2
	2.1 Description of Surface Water	2
	2.2 Testing Protocol	2
3.0	TESTING RESULTS	3
4.0	FULL-SCALE TREATMENT CONDITIONS	5
	4.1 Treatment Criteria	5
	4.2 Recommended Process Conditions	5
5.0	SUMMARY	6

1.0 INTRODUCTION

The **perox-pure**™ Process destroys dissolved organic contaminants in water by means of chemical oxidation. Ultraviolet (UV) light catalyzes the chemical oxidation of organic contaminants in water by its combined effect upon the organic contaminants and its reaction with hydrogen peroxide (H2O2). Many organic contaminants absorb UV light and may undergo a change in their chemical structure or may become more reactive with chemical oxidants. More importantly, UV light at less than 400 nm wavelength reacts with H2O2 molecules to form hydroxyl radicals. These powerful chemical oxidants then react with the organic contaminants in the water. If carried to completion the reaction products of hydrocarbon oxidation with the **perox-pure**™ Process are carbon dioxide and water.

Peroxidation Systems, Inc. (PSI) was contracted by ERM-New England (ERM) to perform a treatability study on contaminated surface water from the New Bedford Superfund Site using the **perox-pure**™ Process. The surface water reportedly contained 320 μg/l of PCBs and 4 μg/l of naphthalene. The treatment objective specified by ERM was the destruction of PCBs to 1 μg/l.

A bench-scale **perox-pure**™ treatability study was performed on the surface water during February 1991 at the PSI Testing Laboratory in Tucson, Arizona. These tests were designed to provide a range of data from which full-scale treatment criteria and costs would be projected.

2.0 TESTING PROCEDURES

2.1 Description of Surface Water

On January 29, 1991, approximately 12 gallons of surface water was received from ERM at the PSI Laboratory in Tucson, Arizona. The surface water was contained in 4-liter amber glass bottles with no headspace.

Characterization of the surface water sample was performed by PSI to determine parameters of importance for **perox-pure™** treatment. The surface water as received contained iron and suspended solids which were removed via gravity filtration prior to performing bench-scale testing. The characterization results for the raw and filtered surface water are shown below. An analysis of the raw surface water revealed the presence of 80 µg/l of total PCBs. Naphthalene was not detected.

	Raw	Filtered
Visual Color:	Orange/ Cloudy	Clear/ Colorless
pH:	6.5	6.5
Iron (mg/l):	12.5	2.5-1.8*
Chloride (mg/l):	14,250	14,250
Total Organic Carbon (mg/l):	7	7
Total Dissolved Solids (mg/l):	12,100	13,100
Est. Suspended Solids (mg/l):	<20	<0.2
Alkalinity (mg/l):	150	110
Turbidity (FTU):	85	<5

* Several iron removal methods were investigated as part of the bench-scale testing variables.

2.2 Testing Protocol

The bench-scale **perox-pure™** test unit was charged by placing an aliquot of the water into a recycle reservoir. A pump was started which circulated the solution through the UV oxidation chamber and back into the reservoir providing continual mixing in the closed system. Sulfuric acid was added to the surface water at this time to adjust the pH for certain tests.

The UV lamp was illuminated to start a test, and H2O2 was added as required to maintain a constant concentration in solution. The solution temperature was controlled through use of an in-line cooling coil. All materials in contact with the solution were glass, quartz, stainless steel, viton or teflon.

After the appropriate oxidation times, samples of the treated water were collected in 1-liter amber glass bottles. An untreated sample was also collected in the same way. These samples were shipped to Golden State Analytical in Van Nuys, California for PCB analyses.

3.0 TESTING RESULTS

Four **perox-pure**™ treatment tests were performed on the contaminated surface water. These tests were designed to determine the effects of pH adjustment, H_2O_2 dosage, and iron removal efficiency on the rate of PCB destruction. The test conditions are shown in Table 1.

Table 1

Bench-Scale **perox-pure**™ Treatment Conditions for the Contaminated Surface Water

Test	H2O2 in Solution (mg/l)	Initial pH	Iron Removal* (Method; mg/l)
1	50	4.5	I ; 0.18
2	50	4.9	II ; 2.5
3	50	6.8	I ; 0.25
4	25	5.3	I ; 0.18

* Method I - Addition of 50 mg/l of H_2O_2, followed by filtration through 5 μ media.
Method 2 - Filtration through 5 μ media.
mg/l = Iron concentration after filtration.

The analytical results for the four tests are shown in Table 2. The analytical reports are provided in Appendix A. The results for Test 1 demonstrate rapid destruction of the PCBs to below the 5 μg/l analytical detection limit. Although the PCB concentration was below the detection limit in every treated sample from Tests 2, 3, and 4, the influent PCB concentration for these tests was either unknown or below the detection limit as well. Thus, it is not possible to evaluate the effects of the test variables.

One possible explanation for the variation in PCB concentration in the influent surface water samples is the affinity of PCBs for adsorption onto solids. Test 1 was performed on the same day the surface water samples arrived at the PSI lab. Tests 2, 3, and 4 were conducted three days later after the analytical results from Test 1 had been evaluated. During the time between the treatment tests, it is possible that the PCBs adhered to the surface of the suspended solids in the surface water and were subsequently removed during filtration.

Because of the minimum amount of treatability information received from this study, the projection of full-scale **perox-pure**™ treatment conditions is difficult for the contaminated surface water. Therefore, PCB destruction rate data from previous **perox-pure**™ treatability studies conducted by PSI on similar water samples will be used in addition to the rate data from Test 1.

Table 2

Bench-Scale **perox-pure**™ Treatment Results for the Contaminated Surface Water

Test	Full-Scale Oxidation Time (min)	PCBs (μg/l)
1	0	57
	1.5	<5
	3.0	<5
	6.0	<5
2	0	NA*
	0.5	<5
	1.0	<5
3	0	NA
	0.5	<5
	1.0	<5
4	0	<5
	0.5	<5
	1.0	<5

* Not analyzed.

GOLDEN STATE
Analytical Services, Inc.
15735-1 Strathern St. • Van Nuys • CA 91406
Tel: (818) 376-1122 • Fax: (818) 781-8128

Client:	Peroxidation Systems, Inc.	Matrix:	Water
Project Name:	ERM N.E.	Date Received:	02/04/91
Project#:	N/A	Date Analyzed:	02/06/91
P.O.#:	N/A	GSAS Job#:	6234

PCBs (608)
ug/L (ppb)

Client Sample#:	ENE 2-1	ENE 2-2	ENE 3-1	Reporting
GSAS Sample#:	GS-0291-004	GS-0291-005	GS-0291-006	Limits
PCB - 1016	BRL	BRL	BRL	5.0
PCB - 1221	BRL	BRL	BRL	5.0
PCB - 1232	BRL	BRL	BRL	5.0
PCB - 1242	BRL	BRL	BRL	5.0
PCB - 1248	BRL	BRL	BRL	5.0
PCB - 1254	BRL	BRL	BRL	5.0
PCB - 1260	BRL	BRL	BRL	5.0

BRL: Below Reporting Limit

Approved By: Dr. B. Gene Bennett

Dr. B. Gene Bennett

GOLDEN STATE
Analytical Services, Inc.
15735-1 Strathern St. • Van Nuys • CA 91406
Tel: (818) 376-1122 • Fax: (818) 781-8128

Client:	Peroxidation Systems, Inc.	Matrix:	Liquid
Project Name:	ERM N.E.	Date Received:	01/30/91
Project#:	N/A	Date Analyzed:	01/30-31/91
P.O.#:	N/A	GSAS Job#:	6221

PCBs (608)
ug/L (ppb)

Client Sample#:	ENE 1-2	ENE 1-3	Reporting
GSAS Sample#:	GS-0191-844	GS-0191-845	Limits
PCB - 1016	BRL	BRL	5.0
PCB - 1221	BRL	BRL	5.0
PCB - 1232	BRL	BRL	5.0
PCB - 1242	BRL	BRL	5.0
PCB - 1248	BRL	BRL	5.0
PCB - 1254	BRL	BRL	5.0
PCB - 1260	BRL	BRL	5.0

BRL: Below Reporting Limit

Approved By: Dr. B. Gene Bennett

B. Gene Bennett

GOLDEN STATE
Analytical Services, Inc.
15735-1 Strathern St. • Van Nuys • CA 91406
Tel: (818) 376-1122 • Fax: (818) 781-8128

Client:	Peroxidation Systems, Inc.	Matrix:	Liquid
Project Name:	ERM N.E.	Date Received:	01/30/91
Project#:	N/A	Date Analyzed:	01/30-31/91
P.O.#:	N/A	GSAS Job#:	6221

PCBs (608)
ug/L (ppb)

Client Sample#:	ENE RAW	ENE 1-0	ENE 1-1	Reporting
GSAS Sample#:	GS-0191-841	GS-0191-842	GS-0191-843	Limits
PCB - 1016	BRL	BRL	BRL	5.0
PCB - 1221	BRL	BRL	BRL	5.0
PCB - 1232	80	57	BRL	5.0
PCB - 1242	BRL	BRL	BRL	5.0
PCB - 1248	BRL	BRL	BRL	5.0
PCB - 1254	BRL	BRL	BRL	5.0
PCB - 1260	BRL	BRL	BRL	5.0

BRL: Below Reporting Limit

Approved By: Dr. B. Gene Bennett

Dr. B. Gene Bennett

GOLDEN STATE
Analytical Services, Inc.
15735-1 Strathern St. • Van Nuys • CA 91406
Tel: (818) 376-1122 • Fax: (818) 781-8128

Client:	Peroxidation Systems, Inc.	Matrix:	Water
Project Name:	ERM N.E.	Date Received:	02/04/91
Project#:	N/A	Date Analyzed:	02/06/91
P.O.#:	N/A	GSAS Job#:	6234

PCBs (608)
ug/L (ppb)

Client Sample#:	ENE 3-2	ENE 4-0	ENE 4-1	Reporting
GSAS Sample#:	GS-0291-007	GS-0291-008	GS-0291-009	Limits
PCB - 1016	BRL	BRL	BRL	5.0
PCB - 1221	BRL	BRL	BRL	5.0
PCB - 1232	BRL	BRL	BRL	5.0
PCB - 1242	BRL	BRL	BRL	5.0
PCB - 1248	BRL	BRL	BRL	5.0
PCB - 1254	BRL	BRL	BRL	5.0
PCB - 1260	BRL	BRL	BRL	5.0

BRL: Below Reporting Limit

Approved By: Dr. B. Gene Bennett

Dr. B. Gene Bennett

GOLDEN STATE
Analytical Services, Inc.
15735-1 Strathern St. • Van Nuys • CA 91406
Tel: (818) 376-1122 • Fax: (818) 781-8128

Client:	Peroxidation Systems, Inc.	Matrix:	Water
Project Name:	ERM N.E.	Date Received:	02/04/91
Project#:	N/A	Date Analyzed:	02/06/91
P.O.#:	N/A	GSAS Job#:	6234

PCBs (608)
ug/L (ppb)

Client Sample#:	ENE 4-2	Reporting Limits
GSAS Sample#:	GS-0291-010	
PCB - 1016	BRL	5.0
PCB - 1221	BRL	5.0
PCB - 1232	BRL	5.0
PCB - 1242	BRL	5.0
PCB - 1248	BRL	5.0
PCB - 1254	BRL	5.0
PCB - 1260	BRL	5.0

BRL: Below Reporting Limit

Approved By: Dr. B. Gene Bennett

Dr. B. Gene Bennett

MODULAR TREATMENT SYSTEMS

MODEL CW-360

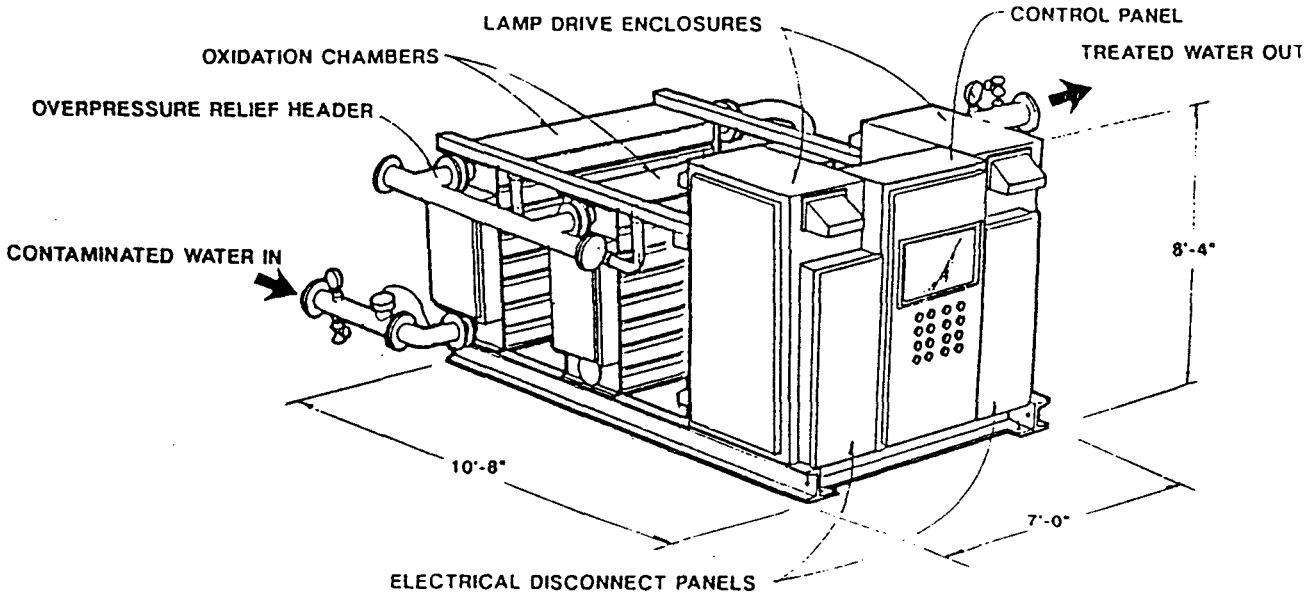

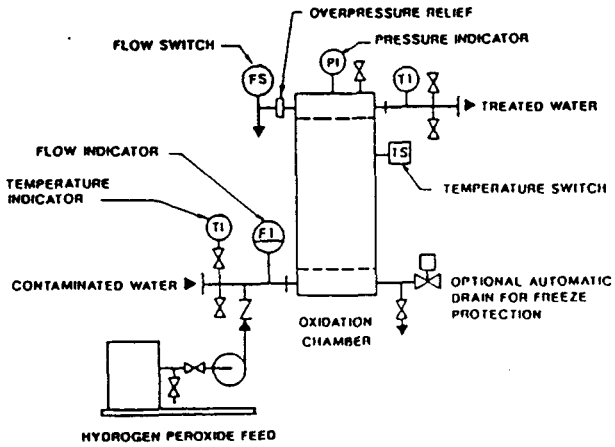

SPECIFICATIONS	Model CW-360	
Flow Rate: Maximum	250 gpm	1000 gpm
Connections:	150# Flange	150# Flange
Inlet:	3"	6"
Outlet:	4"	6"
Power Supply:	3 pH/60Hz/480V, 360KW, 480 Amps	
Electrical Encl.:	NEMA 3R	
Material - Wetted Parts:	316 SS, Quartz, Fluoroelastomers, TFE	
External Parts:	Enameled Steel	
Weight - Shipping:	12500 lbs.	
Operating:	17900 lbs.	

The perox-pure™ chemical oxidation system consists of modular equipment designed to treat water contaminated by dissolved organic materials. Bench-scale process evaluations will determine the oxidation time necessary for the treatment level desired and whether pretreatment of the water is necessary. Full-scale oxidation chamber size and the number of lamps are then selected.

The oxidation chamber is stainless steel. Lamps are horizontally mounted in quartz sleeves with fluoroelastomer seals. Indicators are provided to monitor performance of each lamp. Safety features include shop-wired and tested control panels interlocked with temperature and flow switches to shut off power at preset conditions.

The perox-pure™ system and its components are covered by numerous issued and pending patents.

Peroxidation Systems Inc.

5151 E. Broadway, Suite 600 Tucson, Arizona 85711 602-790-0303 FAX 602-790-0000

APPENDIX C

TEST PLAN FOR EVALUATING THE INCINERABILITY OF THE NEW BEDFORD HARBOR/HOT SPOT OPERABLE UNIT SEDIMENT

ACUREX Corporation

Environmental Systems Division

February 21, 1991

Ms. Marta K. Richards
U.S. Environmental Protection Agency
Risk Reduction Engineering Laboratory
26 W. Martin Luther King Drive
Cincinnati, Ohio 45268

Subject: Revised test plan entitled, "Test Plan for Evaluating the Incinerability of the New Bedford Harbor/Hot Spot Operable Unit Sediment"

Reference: 1. EPA Contract 68-C9-0038
2. Acurex Project 8403/8404

Dear Marta:

Enclosed please find five (5) bound and one (1) unbound copies of the subject revised test plan for your review. Revisions have been added resulting from the conference call among Kevin Howe of USACE-Omaha, Mark Otis of USACE-New England, John Sudnick of Four-Nines, you, and me on February 8, with followup among Kevin, Mark, Mary Sanderson of EPA Region 1, and me on February 11. These conference calls discussed results of the characterization sample analyses of the eight pretest samples forwarded to the IRF. These results showed that sediments dredged for testing contained insufficient PCB to allow quantitating 99.9999 percent PCB DRE at the planned test sediment feedrate. Two approaches to addressing this issue were discussed, collecting more material in the hopes that higher PCB-content sediments would result and higher test sediment feedrates could be supported, and spiking concentrated PCBs into the test sediments to raise their concentrations.

It was determined that more material could not be collected within the timeframe required for the tests. A small amount of additional sediment could possibly be provided if absolutely required. However, it was likely that the PCB content of this additional material would be insufficient to solve the PCB DRE quantitation limit problem. Thus, it was decided to spike test sediments with PCB Askarel transformer fluid to raise the PCB contents to that necessary to clearly establish 99.9999 percent PCB DRE. This decision was reached collectively by all the above-noted conference call participants. The test plan has been revised accordingly. If any problems with this planned approach arise, I will immediately contact you, Kevin Howe, and Mary Sanderson to discuss possible alternate approaches.

Other comments on the previous revision of the test plan raised by Kevin Howe in his February 19 fax to you have been addressed in the revised test plan with the following exceptions:

- No sediment dewatering will be done. The IRF has no facilities for waste feed preparation prior to packaging into fiberpack drums, as you are aware. However, as-shipped sediments with no dewatering should present the greatest challenge to the incinerator system so our results will represent a "most difficult to incinerate" case, which I believe is desired.

555 Clyde Avenue, P.O. Box 7044, Mountain View, CA 94039 (415) 961-5700 Telex: 325961 FAX: (415) 964-5145/6523

- Physical description of the kiln ash was not added as another analyte in old Table 8 (now Table 9). However, we will provide this in the test report

- "Trace metals" has been the term we have used for years; it is one I prefer to "heavy metals"

- PCDD/PCDF sampling remains specified to be performed at the scrubber exist. In putting together the plan for this test program, Region 1 and USACE seemed more interested in trace metal fate during incineration than in organic destruction. For this reason, the trace metal sampling (in addition to particle sizing) is performed both up- and downstream of the scrubber. The organic sampling (PCBs and other semivolatile and volatile organics) is being performed largely to support the IRF trial burn for the facility's PCB RD&D permit, although I am sure Region 1 and USACE would be interested in the data. The PCDD/PCDF sampling was added at Don Oberacher's recommendation, since some questions regarding increased PCDF formation in the incineration of PCB contaminated marine sediments exist. The scrubber exit sampling location does not involve taking a hot zone sample with its attendant difficulties. Thus, it was specified and agreed to amongst the USACE and Region 1 parties to several test planning discussions.

Other responses to USACE comments in Kevin Howe's February 19 fax include:

- The test schedule has been changed to 2-week completion (the 4-week schedule survived the test plan revision which downscoped testing from 7 tests to 3). Every effort will be made to accelerate reporting both preliminary analytical data and final test conclusions. However, based on my experience, I cannot commit to a more aggressive schedule than that in test plan. Regarding 2- to 3-week turnaround time for TCLP analyses, I leave that to you, Kevin Howe, and Mary Sanderson. I have no objection to sending samples to USACE if they feel they can get a more rapid response. The possibility of split sample analyses at the two laboratories exists as well.

- The memo (Larry Johnson, EMSL-RTP, July 7, 1987) describing the multiple metals procedure prior to its formal documentation in the 1989 EPA Metals Guidance Document recommended using a 0.1 N NaOH impinger for HCl knockout prior to the HNO_3/H_2O_2 impingers when sampling in potentially high HCl-content flue gas. We have routinely done this in such instances ever since we started using the method in 1988. The test plan notes that the contents of all sampling train impingers are combined and preserved to pH less than 2 (if required) after sampling. In light of this I don't understand the reviewer's concern.

- We routinely take a 100 dscf Method 0010 sample. This is equivalent to 2.8 dscm, which rounds to 3 dscm as documented in the method. PQLs can be decreased by collecting a greater volume over a longer sampling time, or sampling at a higher sampling rate with a larger size sampling nozzle. The former requires more test sediment to be made available to support a longer sampling time. The latter requires some not straightforward sampling train modification (larger pumps for one). Regardless, to go from a DRE PQL of 99.999 percent to 99.9999 percent requires a 10-fold increase in sample volume, which is generally not practical and less preferable to spiking.

- The afterburner residence time is indirectly measured. The standard flue gas flowrate at the afterburner exit is measured (by the Method 5 team) as well as calculated by mass balance based on CEM readings. The afterburner exit temperature is measured. These allow calculating mean afterburner residence times, which we do for all tests. Residence time cannot be arbitrarily adjusted. It depends on waste feedrate and test temperature, which specifies the fuel and air feedrate requirements. Essentially, setting test temperature and waste feedrate places an upper bound on residence time for a fixed chamber volume at acceptable excess air levels. Shorter times can be achieved by increasing excess air level. However, longer times are not possible.

I trust this letter and the accompanying revised test plan have addressed all recently raised issues.

Sincerely,

ACUREX CORPORATION

Larry R. Waterland, Ph.D.
Project Manager

LRW:can

Enclosures

cc: R. Thurnau/RREL
C. Dempsey/RREL
R. Mournighan/RREL

TEST PLAN FOR EVALUATING THE INCINERABILITY OF THE NEW BEDFORD HARBOR/HOT SPOT OPERABLE UNIT SEDIMENT

Revision 3

February 1991

Acurex Project 8403.2/8404.2
EPA Contract 68-C9-0038
Work Assignment 1-2

Prepared For
Marta K. Richards, Technical Project Monitor
Robert E. Mournighan, Administrative Work Assignment Manager
Robert C. Thurnau, Project Officer
U.S. Environmental Protection Agency
Risk Reduction Engineering Laboratory
Cincinnati, Ohio 45268

Prepared By
Acurex Corporation
Environmental Systems Division
Incineration Research Facility
Jefferson, Arkansas 72079

TABLE OF CONTENTS

Section		Page
1	INTRODUCTION	1
2	PROPOSED TEST PROGRAM	1
	2.1 Test Equipment	2
	2.2 Test Waste Description	2
	2.3 Test Waste Preparation	8
	2.4 Test Conditions	9
3	SAMPLING AND ANALYSIS	10
	3.1 Sampling	10
	3.2 Analysis	20
4	QUALITY ASSURANCE/QUALITY CONTROL	23
5	REGULATORY CONSIDERATIONS	23
6	SCHEDULE	26
7	REPORTING	27
	REFERENCES	27

FIGURES

Number		Page
1	Schematic of rotary kiln system.	3
2	Sampling matrix.	12
3	Generalized CEM gas flow schematic.	18

TABLES

Number		Page
1	Design characteristics of the IRF rotary kiln system	4
2	New Bedford Harbor characterization sample PCB and proximate analysis results	6
3	New Bedford Harbor characterization sample metals analysis results	7
4	Target incineration test conditions	10
5	Additional test conditions	11
6	Incinerator operating parameters recorded	11
7	Sampling and analysis matrix summary for the Superfund sediment incineration tests	13
8	Continuous emission monitors to be used for the tests	17
9	Summary of test samples	24
10	IRF permitted trace metal feedrates	26

1. INTRODUCTION

The Environmental Protection Agency (EPA) is conducting the remedial design (RD) for the remediation of a Superfund site located in New Bedford Harbor near New Bedford, Massachusetts. According to the record of decision (ROD) document (Reference 1) of 1990, the EPA has identified approximately 10,000 cubic yards of contaminated sediment in the Harbor where 4,000 parts per million (ppm) or greater concentrations of PCBs were found. Incineration of the dredged sediment is the selected disposal option. In support of the RD, incineration technologies will be carefully examined to determine the optimum equipment configuration and incinerator operating parameters for the waste material. The examination will include conducting a series of test burns on the Hot Spot sediment to assist in the development of plans and specifications for treating the material specific to the site. The purpose of this document is to describe the test program that will be conducted as part of the RD.

2. PROPOSED TEST PROGRAM

The objective of the proposed test program is to conduct the incineration test burns to obtain the data required to support the RD plans and specifications. The test program will address the following issues:

- Confirm the ability of incineration to destroy PCBs (the major contaminant in the sediment) to the required destruction and removal efficiency (DRE) of 99.9999 percent
- Determine the distribution of the contaminant trace metals cadmium (Cd), chromium (Cr), and lead (Pb) in the discharge streams during incineration of the sediment. Copper (Cu) is also present in the sediment and will be included in the test matrix.
- Determine the effects of incinerator excess air and temperature on organic destruction and metal distributions, including their leachability from kiln ash

- Measure the effectiveness of the air pollution control system (APCS) for collecting particulate and trace metals
- Determine if the treated sediment (kiln ash) from the incinerator can be disposed of as nonhazardous solid waste

Sections 2.1 through 2.3 discuss elements of the test program, including the description of the test equipment, the waste being tested, and the test conditions.

2.1 Test Equipment

All tests planned in this program will be performed in the rotary kiln incineration system (RKS) at the Incineration Research Facility (IRF) in Jefferson, Arkansas. A schematic of the RKS is provided in Figure 1; the design characteristics of the system are summarized in Table 1. As shown, the RKS consists of a rotary kiln primary combustor followed by an afterburner chamber. Downstream of the afterburner, the combustion gas is quenched, then the gas flows through a primary APCS. For these tests the primary APCS will consist of the venturi/packed-column scrubber shown in Figure 1. The single-stage ionizing wet scrubber module shown in Figure 1 will not be used. After treatment in the primary APCS the flue gas then passes through a secondary APCS consisting of a demister, carbon bed absorber, and a high-efficiency particulate air (HEPA) filter. The treated flue gas is discharged to the atmosphere via an induced draft fan and the stack.

2.2 Test Waste Description

The Hot Spot Operable Unit is the first of two planned remediation actions for the New Bedford Harbor site. The Hot Spot area is an area of approximately 5 acres along the western bank of the Acushnet River Estuary adjacent to the Aerovox facility. It has been defined as a Hot Spot area because the level of PCBs detected in the sediment exceeds 4,000 ppm. Levels of PCBs in the Hot Spot sediments range from 4,000 ppm to more than 200,000 ppm (Reference 1). The Hot Spot continues to act as a source of contamination throughout the

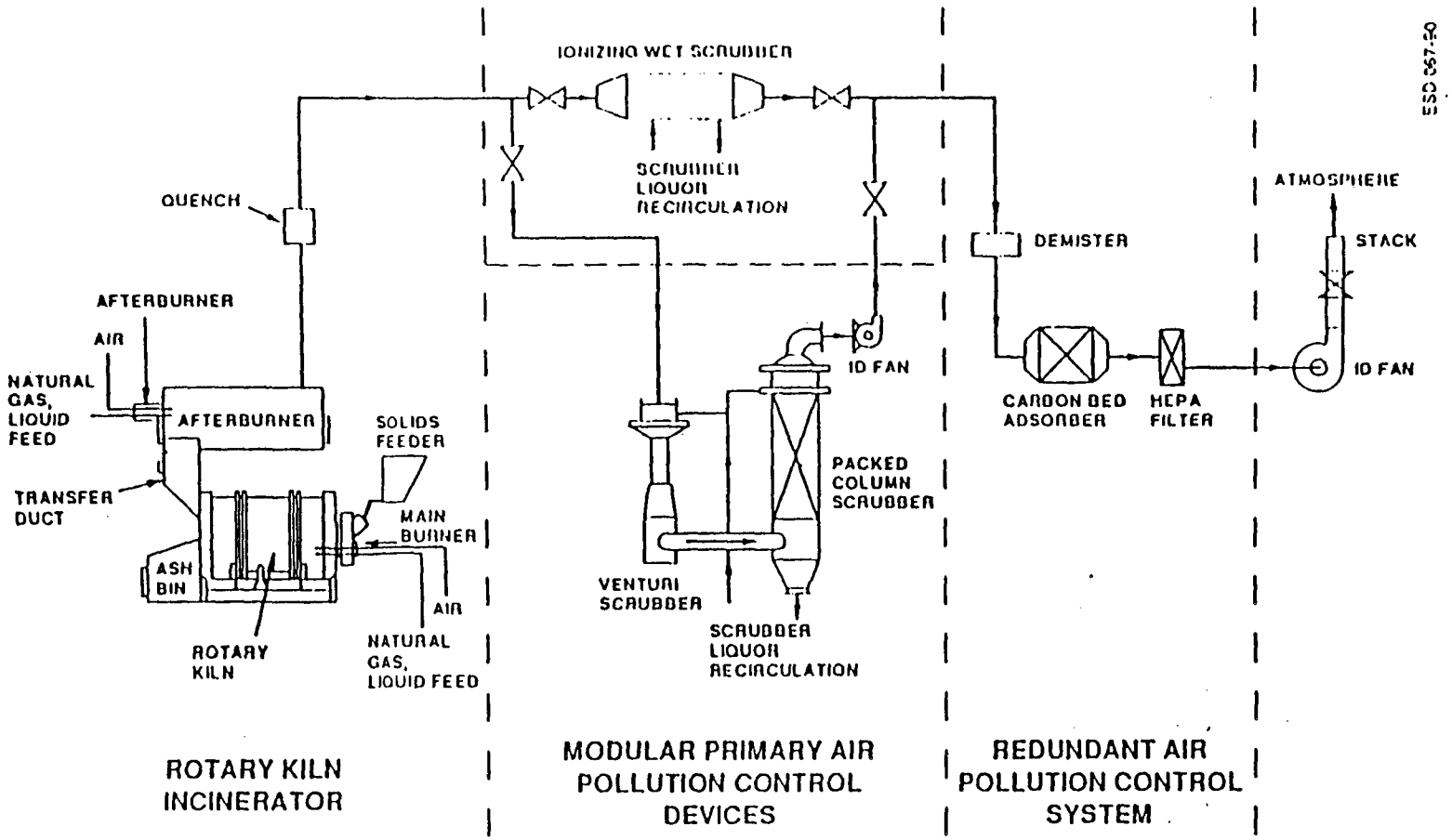

Figure 1. Schematic of rotary kiln system.

TABLE 1. DESIGN CHARACTERISTICS OF THE IRF ROTARY KILN SYSTEM

Characteristics of the Kiln Main Chamber	
Length	2.49 m (8 ft-2 in)
Diameter, outside	1.37 m (4 ft-6 in)
Diameter, inside	Nominal 1.00 m (3 ft-3.5 in)
Chamber volume	1.90 m^3 (67.3 ft^3)
Construction	0.95 cm (0.375 in) thick cold-rolled steel
Refractory	18.7 cm (7.375 in) thick high alumina castable refractory, variable depth to produce a frustroconical effect for moving solids
Rotation	Clockwise or counterclockwise, 0.2 to 1.5 rpm
Solids retention time	1 hr (at 0.2 rpm)
Burner	North American burner rated at 590 kW (2.0 MMBtu/hr) with liquid feed capability
Primary fuel	Natural gas
Feed system:	
Liquids	Positive displacement pump via water-cooled lance
Sludges	Moyno pump via front face, water-cooled lance
Solids	Metered twin-auger screw feeder or fiberpack ram feeder
Temperature (max)	1010°C (1850°F)
Characteristics of the Afterburner Chamber	
Length	3.05 m (10 ft)
Diameter, outside	1.22 m (4 ft)
Diameter, inside	0.91 m (3 ft)
Chamber volume	1.80 m^3 (63.6 ft^3)
Construction	0.63 cm (0.25 in) thick cold-rolled steel
Refractory	15.2 cm (6 in) thick high alumina castable refractory
Gas residence time	1.2 to 2.5 s depending on temperature and excess air
Burner	North American Burner rated at 590 kW (2.0 MMBtu/hr) with liquid feed capability
Primary fuel	Natural gas
Temperature (max)	1200°C (2200°F)
Characteristics of the Ionizing Wet Scrubber APCS	
System capacity, inlet gas flow	85 m^3/min (3000 acfm) at 78°C (172°F) and 101 kPa (14.7 psia)
Pressure drop	1.5 kPa (6 in W.C.)
Liquid flow	15.1 L/min (4 gpm) at 345 kPa (50 psig)
pH control	Feedback control by NaOH solution addition
Characteristics of the Venturi/Packed-Column Scrubber APCS	
System capacity, inlet gas flow	107 m^3/min (3773 acfm) at 1200°C (2200°F) and 101 kPa (14.7 psia)
Pressure Drop	
Venturi scrubber	7.5 kPa (30 in W.C.)
Packed column	1.0 kPa (4 in W.C.)
Liquid flow	
Venturi scrubber	77.2 L/min (20.4 gpm) at 60 kPa (10 psig)
Packed column	116 L/min (30.6 gpm) at 69 kPa (10 psig)
pH control	Feedback control by NaOH solution addition

entire site. In addition to PCBs, other contaminants are present throughout the New Bedford Harbor site. These contaminants include polynuclear aromatic hydrocarbons (PAHs) and trace metals (copper, chromium, lead, and cadmium).

Within the Estuary portion of the site, PAH compounds were found to be co-located with PCBs. However, the range of PAH concentrations in the sediment was significantly less than the range of PCB concentrations. Total PAH sediment concentrations range from below detection limit to 930 ppm, with an average concentration of approximately 70 ppm. The highest PAH concentration of 930 ppm was detected in the Hot Spot area.

Trace metals have been detected in the PCB Hot Spot area at concentrations of up to 7,000 ppm. The metals present are cadmium, chromium, copper, and lead. Of these, cadmium, chromium, and lead are toxicity characteristic leaching procedure (TCLP) metals. Thus, if maximum quantities of these metals leach from the sediment during the TCLP test, the sediment would be classified as toxicity characteristic hazardous waste. Further, if the kiln ash contains elevated levels of leachable metal, it may be toxicity characteristic hazardous waste, thereby requiring secondary treatment (such as stabilization/solidification) prior to disposal.

For the planned test program, eight 30-gal drums of sediment were dredged from the Hot Spot area, from locations known to contain elevated PCB levels, during December 1990. A characterization sample of each of the eight drums dredged was forwarded to the IRF for characterization analyses. Specific analyses completed to date include proximate analysis, PCBs, TCLP trace metals, and copper. PCB and proximate analysis results for the characterization samples are summarized in Table 2.

As shown in Table 2, two PCB formulations were found to contaminate the sediment, Aroclor 1242 and Aroclor 1254, with the Aroclor 1242 formulation being consistently present at approximately three times the Aroclor 1254 levels. The total PCB content of the samples ranged

TABLE 2. NEW BEDFORD HARBOR CHARACTERIZATION SAMPLE PCB AND PROXIMATE ANALYSIS RESULTS

Drum number	PCB concentration[a] (mg/kg)			Proximate analyses			
	Aroclor 1242	Aroclor 1254	Total	Specific gravity	Moisture (%)	Ash (%)	HHV (Btu/lb)
A-1	846	277	1,120	1.10	81.6	15.3	—[b]
A-2	19,500	7,050	26,550	1.03	78.5	16.9	—
A-3	1,600	544	2,140	1.26	66.9	29.5	—
A-4	546	264	810	1.09	64.8	33.4	—
B-1	1,920	551	2,470	1.09	63.0	35.0	—
B-2	2,500	678	3,180	1.20	75.2	22.1	—
B-3	3,930	731	4,660	1.29	75.7	21.9	—
B-4	1,230	242	1,470	1.26	74.9	21.1	—
Average	4,010	1,290	5,300	1.17	72.6	24.4	—

[a]Concentrations are on an as-received basis.
"—" denotes will not combust; negligible HHV.

from 810 to 26,550 mg/kg, with an average total PCB content of 5,300 mg/kg. The sediment characterization samples contained between 63- and 82-percent moisture.

The results obtained confirm data obtained in past studies of the Hot Spot sediments (Reference 1). Past dredgings from the area sampled for this test program suggest that the sediments should contain 15,000 to 20,000 mg/kg PCBs on a dry basis, composed of nominally 60-percent Aroclor 1242 and 40-percent Aroclor 1254. The data in Table 2 confirm total PCB content on a dry basis ranged from 2,300 to 120,000 mg/kg, with an average of 19,000 mg/kg in the characterization samples received at the IRF.

Trace metal analysis results for the characterization samples analyzed are summarized in Table 3. Also shown in the table is raw sample metal concentration corresponding to the toxicity characteristic (TC) regulatory level in TCLP leachates. Because the TCLP specifies

TABLE 3. NEW BEDFORD HARBOR CHARACTERIZATION SAMPLE METALS ANALYSIS RESULTS

Drum number	Metals concentrations[a] (mg/kg)								
	As	Ba	Cd	Cr	Cu	Pb	Hg	Se	Ag
A-1	1.3	70	2.5	59	580	217	0.75	0.15	<0.5
A-2	2.3	69	2.0	43	670	205	0.85	0.15	<0.5
A-3	0.9	64	5.0	103	650	210	0.80	<0.10	0.9
A-4	2.1	70	4.5	73	407	180	0.65	<0.10	0.9
B-1	1.9	76	4.5	101	555	193	0.70	0.20	1.4
B-2	0.8	64	9.0	216	860	228	0.80	0.10	0.9
B-3	1.0	66	10.0	168	685	210	0.75	<0.10	<0.5
B-4	0.3	63	4.0	136	705	203	0.75	0.15	0.9
Average	1.3	68	5.2	112	639	206	0.76	0.15	0.8
Regulatory level[b]	100	2000	20	100		100	4	20	100

[a]Concentrations are on an as-received basis.
[b]TCLP regulatory level (mg/L) multiplied by 20.

extracting 1 mass unit of material into 20 mass units of leachate, if the parent material contains less than 20 times the mg/L TC regulatory level in mg/kg, then it cannot be a TC hazardous waste even if all the toxic components in the parent material leached into the TCLP leachate. The regulatory level noted in Table 3 is the TC regulatory level multiplied by 20.

As the data in Table 3 indicate, the sediments dredged for the planned tests are potential trace metal TC hazardous wastes based on their chromium and lead content only. Concentrations of the other six TCLP metals in the characterization samples analyzed are significantly less than the concentration corresponding to the TC regulatory level. TCLP leachates of each characterization sample have been prepared and are being analyzed for chromium and lead. The expectation is that the TCLP leachates will contain less than the TC regulatory levels of these metals. This expectation is based on past experience with metal-

contaminated Superfund site materials in which only a small fraction of the parent material chromium and lead was leachable in the TCLP. Nevertheless, the TCLP leachate data will establish whether the sediments, in addition to being PCB materials, are also characteristic hazardous wastes. Because extensive past data have shown that the only hazardous organic constituents in the sediments are PCBs and PAHs (Reference 1), the sediments could be considered TC hazardous wastes for chromium (D007) and lead (D008) only. TCLP leachates will confirm the appropriate classification.

2.3 Test Waste Preparation

Upon IRF receipt of the required TSCA RD&D permit from EPA's Office of Toxic Substances (OTS), the eight drums of sediments dredged will be shipped to the IRF, appropriately manifest as PCB material and as TC hazardous wastes if appropriate (based on TCLP leachate analyses). Because the PCB concentrations in each drum differ significantly based on characterization sample analyses, and because a relatively uniform mixture is desired for testing over the entire planned test program, the contents of the eight drums received will be combined. This will be done by transferring the contents of all eight drums into a 250-gal Tote tank available at the IRF. After transfer, the Tote tank will be mixed at least overnight with several mechanical stirrers to achieve a homogeneous sediment mixture. As noted in Section 2.2, the sediments are expected to contain 60- to 80-percent water, and thus, have the consistency of uncured concrete. Mixing should present few problems.

Prior to testing, the combined sediments will be repackaged into 1.5-gal fiberpack containers for feeding to the RKS via the ram feeder. Because as outlined in Section 3.2, the native PCB content of the combined sediments (at 5,300 mg/kg expected) will be insufficient for establishing 99.9999 percent PCB DRE, the combined sediments will be spiked with additional PCBs during this repackaging as follows. Each plastic-bag-lined fiberpack drum will be filled with 5.5 kg (12 lb) of combined sediments. Then 0.2 kg (0.5 lb) of Askarel transformer fluid

containing 60-percent Aroclor 1260 will be added. The fiberpack drum contents will be manually stirred with the trowel, the plastic bag secured with a twist tie, and the drum lid secured. Thus, each fiberpack drum will contain 5.7 kg (12.5 lb) of PCB-contaminated sediment.

2.4 Test Conditions

The planned test program will consist of three tests, each test requiring a 4- to 5-hr time period. For each test, site sediments will be fed to the kiln via the fiberpack drum ram feed system at a rate of 12 fiberpack drums per hr (one drum every 5 min). As noted above, each fiberpack drum will hold approximately 5.7 kg (12.5 lb) of spiked sediment. Therefore, the spiked sediment feedrate will be nominally 68.2 kg/hr (150 lb/hr). The test program maximum total sediment feed time will be 15 hr (three 4- to 5-hr tests). Native sediment feedrate will be 65.5 kg/hr (144 lb/hr), so a total of 980 kg (2,160 lb) of native sediment will be required. The eight drums to be received are expected to contain 1060 kg (2,340 lb) based on the average characterization sample specific gravity noted in Table 2.

The test variables will be kiln exit temperature and kiln exit flue gas oxygen (O_2) level. The target incineration test conditions are listed in Table 4. The incineration program includes two levels of kiln temperature (1,500 and 1,800°F) and two levels of kiln exit flue gas O_2 concentration (6 and 10 percent). All tests will be performed at the same afterburner temperature (2,200°F). These conditions are typical of full-scale incinerator operation and have been used at the IRF in the past for similar treatability tests. The afterburner temperature of 2,200°F is designed to ensure that the 99.9999 percent DRE requirement is met, as mandated by TSCA for PCB incineration.

TABLE 4. TARGET INCINERATION TEST CONDITIONS

Test	Kiln exit temperature °C (°F)	Afterburner exit temperature °C (°F)	Kiln exit O_2 level (%)
1	816 (1500)	1204 (2200)	6
2	982 (1800)	1204 (2200)	6
3	982 (1800)	1204 (2200)	10

Additional RKS operating conditions to be held constant for all tests are presented in Table 5. Throughout the test program the incinerator operating parameters noted in Table 6 will be recorded at intervals of at least once every 15 min.

After each test (completion of flue gas sampling), test waste feed will be stopped. The incinerator will continue to be fired with natural gas until the kiln is visually clear of ash material or for a period of 2 hr, whichever is greater. The ash collected in the ash drum will be weighed and sampled. The scrubber liquor loop will then be drained, and the scrubber liquor will be collected and sampled. After recharging the scrubber liquor loop with fresh makeup, the incinerator will either be turned off (over weekend periods) or operated overnight while firing natural gas to produce steady-state conditions for the next day's test.

3. SAMPLING AND ANALYSIS

The planned sampling and analysis efforts for all tests are summarized in Figure 2 and detailed in Table 7. For clarity, the sampling effort will be discussed first in Section 3.1, followed by a discussion of sample analysis.

3.1 Sampling

As indicated in Table 7, a composite sediment sample from each drum received will be obtained by taking thief samples from the shipment drum at three locations in the drum cross section just prior to combining the sediments into the Tote tank. Similarly, a composite

TABLE 5. ADDITIONAL TEST CONDITIONS

Kiln solids residence time	0.5 hr
Scrubber blowdown rate	0 L/min (0 gpm) or minimum operable
Venturi liquid flowrate	76 L/min (20 gpm)
Venturi pressure drop	6.2 kPa (25 in W.C.)
Packed tower liquid flowrate	115 L/min (30 gpm)
Scrubber liquor temperature	49°C (120°F)

TABLE 6. INCINERATOR OPERATING PARAMETERS RECORDED

Temperatures
Rotary kiln exit gas
Afterburner exit gas
Scrubber exit gas
Stack gas
Recirculating scrubber liquor
Scrubber blowdown liquor
Flowrates
Rotary kiln natural gas feed
Afterburner natural gas feed
Rotary kiln combustion air
Afterburner combustion air
Stack combustion flue gas
Venturi scrubber liquor
Packed tower scrubber liquor
Scrubber blowdown liquor
Scrubber makeup liquor
Pressures
Rotary kiln chamber
Afterburner chamber
Venturi scrubber ΔP
Packed tower scrubber ΔP
Other
Scrubber liquor Ph
Cumulative synthetic waste weight fed
Rotary kiln rotation speed

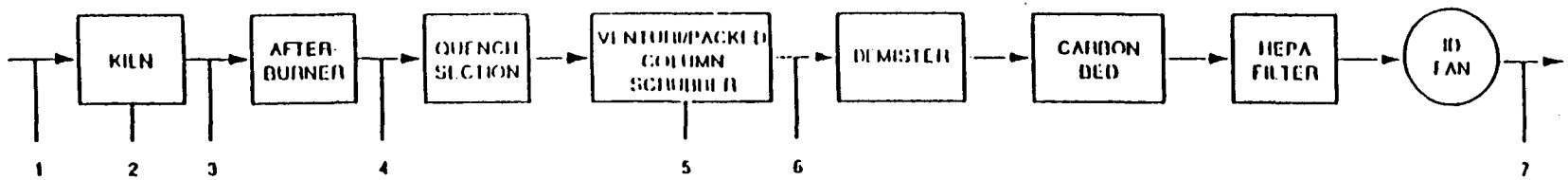

Sampling point	Sediment feed	Kiln ash	Venturi/ packed-column scrubber liquor	Continuous flue gas monitoring	Method 0010 (PCBs and PAHs)	Method 0010 (PCDDs/ PCDFs)	Method 0030 (volatile organics)	Particle size distribution (cascade impactor)	Method 5 (Particulate, trace metals)	Method 5 (Particulate, HCl)
1	X									
2		X								
3				X						
4				X				X	X	
5			X							
6				X	X	X	X		X	X
7				X						X

Figure 2. Sampling matrix.

TABLE 7. SAMPLING AND ANALYSIS MATRIX SUMMARY FOR THE SUPERFUND SEDIMENT INCINERATION TESTS

Sample	Location	Sampling procedure	Analysis		
			Parameter	Method	Frequency
Native sediment	Shipment drums prior to mixing	Thief/composite	PCBs	Method 3540 extraction with Method 8080 analysis for PCBs[a]	1 composite/drum
			Trace metals (Cd, Cr, Cu, Pb)	Method 3050 digestion with Method 6010 analysis[a]	1 composite/drum
Askarel spike	Storage container	Grab	PCBs	Dilution; direct injection GC analysis by Method 8080[a]	1 sample
Combined sediment feed	Sediment Tote prior to packaging	Thief/composite	Proximate analysis:		1 composite
			Ash content	ASTM-D-3174	
			Moisture	ASTM-D-3173	
			Heating value	ASTM-D-3286	
			Ultimate analysis (C, H, O, N, S, Cl)	ASTM-D-3176	1 composite
			PCBs, PAHs	Method 3540 extraction with Method 8270 analysis for PAHs and Method 8080 for PCBs[a]	1 composite
			Trace metals (Cd, Cr, Cu, Pb)	Method 3050 digestion with Method 6010 analysis[a]	1 composite
			TCLP extraction	Method 1311[b]	1 composite
Combined sediment feed TCLP leachate			Trace metals (Cd, Cr, Cu, Pb)	Method 3010 digestion with Method 6010 analysis[a]	1 composite
Kiln ash	Kiln ash pit	Thief/composite	PCBs, PAHs	Method 3540 extraction with Method 8270 analysis for PAHs and Method 8080 for PCBs[a]	1 composite/test
			Trace metals (Cd, Cr, Cu, Pb)	Method 3050 digestion with ICAP analysis by Method 6010[a]	1 composite/test
			TCLP extraction	Method 1311[b]	1 composite/test
Kiln ash TCLP leachate			Trace metals (Cd, Cr, Cu, Pb)	Method 3010 digestion and ICAP analysis by Method 6010[a]	1 composite/test

[a]Reference 2, SW-846.
[b]Reference 3, 40 CFR 261, Appendix II.

TABLE 7. (concluded)

Sample	Location	Sampling procedure	Analysis		
			Parameter	Method	Frequency
Scrubber liquor	Scrubber system drain	Tap	PCBs, PAHs	Method 3510 extraction with Method 8270 analysis for PAHs and Method 8080 for PCBs[a]	1 composite/test
			Trace metals (Cd, Cr, Cu, Pb)	Method 3010 digestion and ICAP analysis by Method 6010[a]	1 composite/test
Flue gas	Afterburner exit	Method 5[c] modified for multiple metals capture[d]	Trace metals (Cd, Cr, Cu, Pb)	Digestion by Method 3050 (particulate) or Method 3010 (impingers), and ICAP analysis by Method 6010	
			Particulate	Method 5	1/test
		Cascade Impactor (CARB 501[e])	Particulate size distribution	Gravimetric analysis of impactor stages	1/test
Flue gas	Scrubber exit	Method 5[c]	Particulate	Method 5[c]	1/test
			HCl	Analysis of impinger solution for Cl by Method 300.0[f]	1/test
		Method 5[c] modified for multiple metals capture	Trace metals (Cd, Cr, Cu, Pb)	Digestion by Method 3050 (particulate) or Method 3010 (impingers), and ICAP analysis by Method 6010[a]	1/test
		Method 0010[a]	PAHs and PCBs	Method 3540 Soxhlet extraction and analysis by Method 8270 for semivolatile organics and Method 8080 for PCBs[a]	1/test
		Method 0010[a]	PCDDs/PCDFs	Extraction and analysis by Method 8290[a]	1/test
		Method 0030[a]	Volatile organics	Method 5040[a]	1/test
Stack gas	Stack, downstream of carbon bed/HEPA filter	Method 5[c]	Particulate	Method 5[c]	1/test
			HCl	Analysis of impinger solution for Cl by Method 300.0[f]	1/test

[a]Reference 2, SW-846.
[c]Reference 4, 40 CFR 60, Appendix A.
[d]Reference 5, Incinerator Metals Guidance.
[e]Reference 6, CARB Methods.
[f]Reference 7, Water and Wastes

combined sediment sample will be obtained by taking thief samples from the Tote tank at five locations in the tank cross section just prior to packaging into the fiberpack drums. The three or five samples will be combined to form one composite waste feed sample for each shipment drum and for the mixed sediments. Each of the composite waste samples will be preserved in appropriate containers according to the specific analysis procedure requirements noted in Table 7 (e.g., cooled to 4°C in an amber glass bottle for semivolatile organic analysis) and given to the sample custodian.

For each incineration test, the sampling protocol to satisfy the test objectives will entail:

- Collecting a composite sample of the kiln ash
- Collecting a composite sample of the scrubber liquor
- Continuously measuring O_2 levels in the kiln exit and afterburner exit flue gases; O_2, CO, CO_2, NO_x, and TUHC levels at the venturi/packed-column scrubber exit; and O_2, CO, and CO_2 levels in the stack
- Sampling flue gas at the scrubber system exit for PAHs and PCBs
- Sampling flue gas at the scrubber system exit for polychlorinated dibenzo-p-dioxins (PCDDs) and dibenzofurans (PCDFs)
- Sampling flue gas at the scrubber system exit for volatile organics
- Sampling flue gas upstream of the scrubber system for particle size distribution
- Sampling flue gas upstream and downstream of the scrubber system for particulate and trace metals using a variation of Method 5 modified for multiple metals (Reference 5)
- Sampling downstream of the scrubber system and at the stack downstream of the secondary APCS for particulate and HCl using Method 5 to comply with permit requirements

On a given test day, waste feed will be started at some time after the incinerator reaches nominally steady-state operation at the test conditions, firing auxiliary fuel (natural gas) alone. Flue gas sampling will begin no earlier than 1 hr after the start of waste feed. Waste feed will continue until all flue gas sampling is completed.

During each test, kiln ash will be continuously removed from the kiln ash pit via a transfer auger and deposited into an initially clean 55-gal drum. After all test ash has been deposited in this drum, representative kiln ash samples will be taken by thief sampling in at least three locations across the collection drum cross section. These three ash samples will be combined to form one composite sample. Aliquots of each composite sample will be preserved in appropriate containers according to the specific respective analysis procedure requirements.

Each test will be run with the scrubber liquor loop operating at total recycle (no blowdown). At the end of each test day, the incinerator will continue to operate for at least 2 hr after stopping waste feed or until the kiln is visually clear of ash, whichever is greater. After this period of time, the scrubber system will be drained. The scrubber liquor samples will be collected during draining via a sampling tap in the drain line. Aliquots of each blowdown volume will be preserved in appropriate containers according to the specific respective analysis procedure requirements (e.g., cooled to 4°C in an amber glass bottle for semivolatile organic analysis; preserved to pH <2 with HNO_3 in a glass bottle for trace metal analysis).

The flue gas, at four locations (kiln exit, afterburner exit, venturi/packed-column scrubber exit, and the stack), will also be continuously monitored for location-specific combinations of O_2, CO, CO_2, NO_x, and TUHC. The continuous emission monitors (CEMs) available at the IRF and the locations they will monitor during these tests are summarized in Table 8. This monitoring arrangement will be employed in all tests. Figure 3 illustrates the generalized flue gas conditioning and flow distribution system at the IRF. Four independent systems, such as the one illustrated in Figure 3, are in place so that the appropriately conditioned sample gas from four separate locations can be routed to any of the available monitors listed in

TABLE 8. CONTINUOUS EMISSION MONITORS TO BE USED FOR THE TESTS

Location	Monitor				Range
	Constituent	Manufacturer	Model	Principle	
Kiln exit	O_2	Beckman	755	Paramagnetic	0-10 percent 0-25 percent 0-100 percent
Afterburner exit	O_2	Beckman	755	Paramagnetic	0-10 percent 0-25 percent 0-100 percent
Scrubber exit	CO	Horiba	VIA 500	NDIR	0-50 ppm 0-500 ppm
	CO_2	Horiba	PIR 2000	NDIR	0-20 percent 0-80 percent
	Unheated TUHC	Beckman	402	FID	0-10 ppm 0-100 ppm 0-1000 ppm
	O_2	Teledyne	326A	Fuel cell	0-5 percent 0-10 percent 0-25 percent
	NO_x	Thermo Electron	10 AR	Chemiluminescent	0-75 ppm to 0-10,000 ppm in multiples of 2
Stack	CO	Horiba	VIA 500	NDIR	0-50 ppm 0-500 ppm
	CO_2	Horiba	PIR 2000	NDIR	0-20 percent 0-80 percent
	O_2	Teledyne	326A	Fuel cell	0-5 percent 0-10 percent 0-25 percent

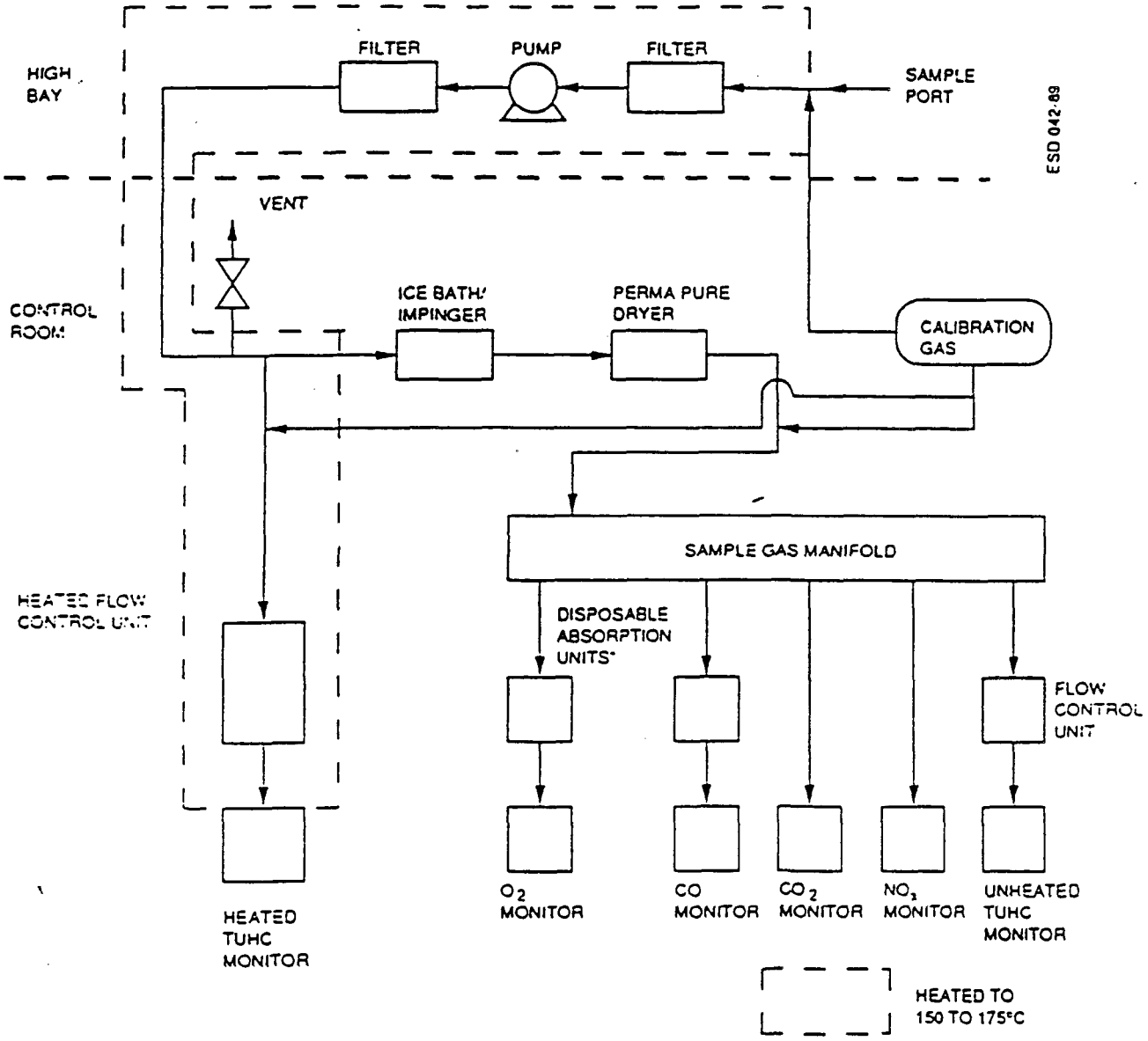

* Mixed Na and Ca hydroxides for acid gas removal

Figure 3. Generalized CEM gas flow schematic.

Table 8. The CEM setup described in Table 8, with appropriate gas conditioning per Figure 3, will be employed throughout this test program. CEM data are recorded continuously by strip chart recorders and by the automatic data acquisition system.

Flue gas sampling will begin 1 hr after the start of waste feed on a given test day or shortly thereafter. Flue gas samples will be collected at three locations: at the afterburner exit, the venturi/packed-column scrubber exit, and the stack. The afterburner exit flue gas sampling data will be used to describe trace metal distribution and total particulate load into the primary APCS. The venturi/packed-column scrubber exit flue gas sampling, performed at a location representative of the flue gas discharge of a typical hazardous waste incinerator, will support the test objectives for PCB DRE and APCS particulate and metal removal efficiency. Although not a test objective, the scrubber exit sampling will also allow measuring PAH DRE as well. The stack gas sampling will be performed to satisfy IRF hazardous waste management permit requirements.

The afterburner exit flue gas particulate particle size distribution will be determined using a cascade impactor train (California Air Resources Board [CARB] Method 501, Reference 6). The flue gas sample will be extracted from the duct, and the particulate matter will be classified into several size ranges between 0.3 and 10 μm. Larger particles will be caught with an upstream "pre-cutter" cyclone separator. The method will provide information on the size distribution of the afterburner exit particulate matter.

The afterburner exit flue gas will also be sampled for particulate matter and trace metals using the modified Method 5 sampling train with multiple metals train impingers. The first impinger will be initially empty. The second will contain 0.1N NaOH solution for HCl removal. The third and fourth impingers will each contain 5-percent nitric acid and 10-percent hydrogen peroxide. The fifth (last) impinger will contain silica gel. After sampling, the contents

of the first, second, third, and fourth impingers will be combined and preserved (if needed) with HNO_3 to pH<2 for trace metal analysis.

The venturi/packed-column scrubber exit flue gas will be sampled for trace metals using the Method 5 train modified for multiple metals capture described above. In addition, two Method 0010 trains will sample the scrubber exit flue gas. One will be used for PCB and PAH analysis. The other will be used for PCDD/PCDF analysis.

Sampling of the flue gas at the scrubber exit and at the stack will also be conducted in accordance with the standard EPA Method 5 procedures. HCl (chloride ion) in the impinger solutions will be determined by ion chromatography. Particulate load will be determined gravimetrically. The stack tests are conducted as part of the permit to operate requirements of the IRF.

3.2 Analysis

The analysis protocols for each of the collected samples are presented in Table 7 and discussed in more detail below.

One composite combined sediment feed sample (taken from the Tote tank in which all received drums are mixed) will be subjected to proximate (ash, moisture, and heating value) and ultimate (C, H, O, N, S, Cl) analyses by the ASTM methods noted in Table 7. This combined sediment feed composite sample and each of the individual test kiln ash and scrubber liquor samples will be analyzed for semivolatile organics (PCBs and PAHs) and trace metals (Cd, Cr, Cu, and Pb). In addition, the combined sediment feed and the kiln ash for each test will be subjected to TCLP extraction, and the resulting leachate will be analyzed for trace metals. Each of the samples from the eight shipment drums taken before combining all sediment received will also be analyzed for PCBs and trace metals.

Analysis for PAHs and other semivolatile organics will be by Method 8270; PCB analyses will be by Method 8080. Aqueous liquid samples (scrubber liquor) will be liquid/liquid

extracted (Method 3510) for analysis. Solid samples (sediment feed and kiln ash) will be Soxhlet extracted (Method 3540).

Trace metal analyses will be by inductively coupled argon plasma spectroscopy (ICAP, Method 6010). Aqueous liquid samples (scrubber liquor and TCLP leachates) will be digested by Method 3010. Solid samples (sediment feed and kiln ash) will be digested by Method 3050.

The particulate/metals train particulate catch will be digested by Method 3050 for metals analysis. Impinger contents from this train will be combined and digested by Method 3010 for metals analysis. Analyses of the digestates will be performed for the trace metals specified above by Method 6010.

The cascade impactor stages from sampling at the afterburner exit will be separated and the appropriate gravimetric analysis performed on each impactor stage, giving particle size distribution data.

Stack gas particulate load will be determined by desiccating the filter and probe wash of the Method 5/HCl trains at the scrubber exit and the stack. Particulate loading will be determined gravimetrically. Stack HCl levels will be determined by analyzing the combined impinger solutions from the stack Method 5/HCl trains for chloride using ion chromatography by Method 300.0.

A Method 0010 train will sample the scrubber exit flue gas for semivolatile organics and PCBs. Semivolatile organic analyses of the scrubber exit samples will be performed by Method 3540 extraction and Method 8080 analysis for PCBs and Method 8270 analysis for the semivolatile organic target compound list (TCL) constituents. A separate Method 0010 train will sample the scrubber exit flue gas for PCDDs and PCDFs. Extraction and analysis of this train's samples will be by Method 8290. The scrubber exit flue gas will also be sampled for volatile organics using Method 0030. Collected sample analysis will be by Method 5040 for the volatile organic TCL constituents. The combination of the semivolatile and volatile organic TCL

constituent determinations in the scrubber exit flue gas will provide the TSCA-required measure of total chlorinated organics (RCl).

The practicable quantitation limit (PQL) of Method 8080 analysis of Method 0010 samples performed at the IRF is 0.44 μg/train. The PQL is based on concentrating the sampling train organic extract to a final volume of 1 mL. Standard Method 0010 procedures specify collecting 2.8 dscm of flue gas per train. Therefore, the PQL for PCBs in the scrubber exit flue gas samples will be 0.16 μg/dscm. Under the test conditions planned for these tests, the scrubber exit flue gas flowrate will be below 37 dscm/min. Thus, the PCB emission rate PQL will be 0.096 μg/s. As noted in Section 2.4, the planned feedrate for all tests in 68.2 kg/hr (150 lb/hr). Characterization sample analyses suggest that the combined sediment feed PCB content will be 5300 mg/kg. At this feedrate the native PCB feedrate in combined sediments fed at 68.2 kg/hr will be 92 mg/s. Thus, the ability to quantitate only 99.999896 percent DRE ($100 \times (1-0.096 \times 10^{-6}/0.092)$) will exist based on native sediment PCB content. This falls just under the regulation required 99.9999 percent DRE. For this reason, the planned tests specify spiking the combined sediment feed with additional PCBs, supplied via an Aroclor 1260 Askarel transformer fluid.

The spiked sediments are expected to contain 29,100 mg/kg total PCB. At this elevated concentration, and a spiked sediment feedrate of 68.2 kg/hr, total PCB feedrate will be 0.55 g/s. At this feedrate, the ability to quantitate 99.999983 percent DRE ($100 \times (1-0.096 \times 10^{-6}/0.55)$) will exist. This gives an adequate margin for establishing that the tests achieve the required 99.9999 percent PCB DRE.

The PQL of Method 8270 analyses of Method 0010 samples performed at the IRF is 20 μg/train for PAHs. Following through the calculation outlined above for PCBs, the ability to quantitate 99.99 percent PAH DRE will exist for those PAHs present at sediment concentrations greater than 2,900 ppm. The discussion in Section 2.2 noted that the maximum

PAH concentrations measured in past efforts have been up to 930 ppm. Thus, the ability to establish 99.99 percent PAH DRE will not exist in these tests. Only the absence of PAHs in the scrubber exit flue gas can be verified, with a corresponding PAH DRE of greater than some value, this value being less than 99.99 percent.

Table 9 summarizes the number and type of samples that will be collected over the test program. The sample collection procedures will result in one combined sediment sample, with kiln ash and scrubber blowdown residuals samples each test day, to provide one composite sediment and three incineration residual combinations for the series of tests. One set of flue gas characterization samples will be collected for each test.

All semivolatile organic TCL constituent, PCB, flue gas particulate, and flue gas HCl sample analyses, and all TCLP extractions, will be performed in the IRF onsite laboratory. All digestions and trace metal analyses and all Method 0030 volatile organic analyses will be performed by the EMSL Laboratory in Cincinnati, Ohio. Proximate and ultimate analyses will be performed by Galbraith Laboratories in Knoxville, Tennessee. PCDD/PCDF analyses will be performed by a qualified offsite laboratory to be determined.

4. QUALITY ASSURANCE/QUALITY CONTROL

All tests will be conducted in accordance with the guidelines outlined in the Quality Assurance Project Plan (QAPjP) for these tests, submitted as a companion document to this test plan.

5. REGULATORY CONSIDERATIONS

The sediment being shipped to the IRF will be PCB-contaminated material and will be packaged and transported accordingly. It is also a potentially characteristic hazardous waste. If characterization sample analyses show this to be the case, the sediment will be also be managed as such.

TABLE 9. SUMMARY OF TEST SAMPLES

Sample type	Analyte	Number of samples	
		Each test	Total
Individual sediment feed	PCBs		8
(before combining)	Trace metals (Cd, Cr, Cu, Pb)		8
Askarel spike	PCBs		1
Combined sediment feed	Proximate, ultimate, and silica		1
	PCBs and PAHs		1
	Trace metals (Cd, Cr, Cu, Pb)		1
	TCLP extraction		1
Sediment feed TCLP leachate	Trace metals (Cd, Cr, Cu, Pb)		1
Kiln ash	PCBs and PAHs	1	3
	Trace metals (Cd, Cr, Cu, Pb)	1	3
	TCLP extraction	1	3
Kiln ash TCLP leachate	Trace metals (Cd, Cr, Cu, Pb)	1	3
Composite scrubber liquor	PCBs and PAHs	1	3
	Trace metals (Cd, Cr, Cu, Pb)	1	3
Afterburner exit:			
Particulate/metals train:			
Probe wash/filter	Trace metals (Cd, Cr, Cu, Pb)	1	3
Impingers (1, 2, 3, and 4 combined)	Trace metals (Cd, Cr, Cu, Pb)	1	3
Venturi/packed-column scrubber exit flue gas:			
Particulate/metals train:			
Probe wash/filter	Trace metals (Cd, Cr, Cu, Pb)	1	3
Impingers (1, 2, 3, and 4 combined)	Trace metals (Cd, Cr, Cu, Pb)	1	3
Method 0010 train	PCBs and PAHs	1	3
Method 0010 train	PCDDs/PCDFs	1	3
Method 0030			
Sample trap pair	Volatile organics	3	9
Particulate/HCl train:			
Probe wash/filter	Particulate	1	3
Impingers (1, 2, and 3 combined)	Chloride	1	3
Stack gas:			
Particulate/HCl train:			
Probe wash/filter	Particulate	1	3
Impingers (1, 2, and 3 combined)	Chloride	1	3

The scrubber liquor generated during the test program will be analyzed for PCBs and for hazardous characteristics. If the scrubber liquor contains less than 1 ppb PCBs and does not exhibit hazardous waste characteristics (specifically the toxicity characteristic as determined by the TCLP test), it will be discharged to the host facility (NCTR) chemical sewer. If the scrubber liquor possesses a hazardous characteristic or is considered PCB-contaminated, it will be managed accordingly via shipment to a permitted treatment, storage, and disposal facility (TSDF) for appropriate further treatment and disposal.

The kiln ash residue from the tests, along with any remaining untreated sediments, will be shipped back to the generator.

In the permit application for a TSCA PCB RD&D permit to EPA's Office of Toxic Substances, the IRF proposed to conduct these tests in accordance with the facility's hazardous waste management permit administered by the Arkansas Department of Pollution Control and Ecology (ADPCE). This permit establishes waste feed cutoff limits for the RKS as follows:

- Maximum waste feedrate: 2.5 MMBtu/hr
- Maximum stack gas CO: 100 ppmv, rolling 1-hr average
- Minimum afterburner temperature: 1,863°F
- Maximum combustion gas flowrate: 2,603 acfm, rolling 1-hr average

To specifically adhere to TSCA provisions, tighter limits on minimum afterburner temperature and maximum combustion gas flowrate will be adopted for these tests as follows.

- Minimum afterburner temperature: 1,149°C (2,100°F)
- Maximum combustion gas flowrate: 1,550 acfm, rolling 1-hr average

In addition, the test sediments contain negligible heat content as shown in Table 2, so at the planned 144 lb/hr sediment feedrate, the maximum waste feedrate heat input will not be exceeded. Expected operation will also be at less than the maximum stack gas CO.

The IRF permit also limits the feedrate of hazardous constituent trace metals to the RKS equipped with the venturi/packed-column scrubber as shown in Table 10. Table 10 also notes the sediment feed concentration corresponding to the individual metal feedrate limitation at a sediment feedrate of 144 lb/hr. The sediment characterization analysis results shown in Table 3 confirm that the metals feedrate limitations will not be exceeded.

6. SCHEDULE

Planned tests are expected to be completed over a 2-week period, currently scheduled to begin in March 1991.

TABLE 10. IRF PERMITTED TRACE METAL FEEDRATES

Metal	Feedrate to RKS with venturi/packed-column scrubber (lb/hr)	Waste feed concentration allowed at 144 lb/hr sediment feedrate (ppm)
Arsenic[a]	0.039	271
Chromium[a]	0.032	222
Cadmium[a]	0.052	361
Beryllium[a]	0.024	167
Thallium	1.9	13,200
Barium	4,500	1,000,000
Silver	17	118,000
Lead	0.54	3,750
Antimony	1.9	13,200
Mercury	1.9	13,200

[a]The sum of actual feedrate/feedrate limit for arsenic, chromium, beryllium, and cadmium must also be less than or equal to 1.0.

APPENDIX D

TEST BURN FINAL REPORT

(Note: The letters, comments and draft RREL report should be replaced with the final RREL report, when available.)

FOUR NINES, INC.
P.O. Box 701, Conshohocken, PA 19428
(215) 834-0490

October 7, 1991

Mr. Kevin Howe
Department of the Army Corps
of Engineers, Omaha District
215 North 17th Street
Omaha, NE 68102-4978

Subject: Pilot-Scale Incineration of PCB-Contaminated Sediments From the New Bedford Harbor by Acurex Corporation Environmental Systems Division Incineration Research Facility - Jefferson, Arkansas

Reference: Contract No. DACW 45-91-C-0010

Dear Mr. Howe:

I have reviewed the draft test report issued by Acurex Corporation on the New Bedford Sediment testing done in March 1991. As I have indicated in previous discussions, the value of this testing lies in the information it provides about the waste characteristics and behavior. These properties and characteristics include:

1) Ultimate Chemical Analysis
2) Heating Values
3) Density
4) Ash Sample for TCLP Testing
5) Handlability of Waste and Ash
6) Nuances Unique to the Sediment

The test in no way determines whether or not the material can be successfully incinerated, nor does it specify the successful operating parameters of an incineration system.

The test does provide general information correlating the operating parameters of the Acurex system with destruction efficiencies, collection efficiencies for a particular pollution control system, auxiliary energy requirements and other "datum plane" type information.

I feel the report should be included in the request for a proposal package. It should be accompanied, however, by a statement of explanation which would clarify that the test report is for information only and in no way is intended to be the "blueprint" for the required incinerator design.

400 Stenton Avenue, Plymouth Meeting, PA 19462
FAX: (215) 834-1469 TELEX: 4761066 ITT

Please contact me if you have any questions or would like to discuss the report in greater detail.

Very truly yours,

FOUR NINES, INC.

John J. Sudnick

John J. Sudnick, P.E.

ACREXREP.JS.1.hj

U. S. Army Corps of Engineers
Omaha District, Environmental Branch

Telefax Transmittal Cover Sheet

FAX Recipient: Jim Fitzgerald (ERM - New England, Inc.)

Recipient's FAX #: 617 - 720 - 5742

Recipient's Phone #: 617 - 742 - 8228

FAX Originator: Kevin M. Howe (CEMRO-ED-ED)

Originator's FAX #: (402) 221-7777

Originator's Phone #: (402) 221-7655

3 Pages (Including This Cover Sheet)

Date: ~~10/28/91~~ 10/29/91

Message: FYI Jim, please accept a copy of a few more comments regarding the draft "Test Burn" report from RREL.

These comments are from Paul Craffey (MA-DEP).

Please add these comments to those I faxed you last Friday (from Gayle Garman, EPA).

P.S. - I will FAX a copy to John Sudnick also.

Thanks,

Kevin Howe

Commonwealth of Massachusetts
Executive Office of Environmental Affairs
Department of Environmental Protection

William F. Weld
Governor
Daniel S. Greenbaum
Commissioner

October 24, 1991

Mr. Kevin Howe
Department of the Army
Corps of Engineers, Omaha District
215 North 17th St.
Omaha, NE 68102-4978

Subject: New Bedford Harbor Hot Spot
Draft Test Burn Results Comments

Dear Mr. Howe:

The Department has reviewed the "Draft" Report of the Test Burn from the Hot Spot material of New Bedford Harbor Superfund Site. The DEP has the following comments.

1. Page 4-15, 4th Paragraph, 1st Sentence "...in the nominal 65 to 75 percent range." - There is no metal indicated in the 1st sentence. The metal that is in the 65 to 75 percent range is the chromium.

2. Page 4-16, Table 4-12, Copper - The Copper Total from the Kiln ash (59), Scrubber exit flue gas (4), and Scrubber liquid (2) do not add to the Total of 71, but to a Total of 65. If the new Total is 65, this will also change the range of the copper on page 4-17, paragraph 2, 1st sentence. The new range would be 65 to 86 percent for copper. Also, any change(s) in any number(s) could change numbers in other tables or other parts of the text. Any changes should be checked to ensure that the remainder of the report is correct.

3. A significant amount of the cadmium and lead incinerated were volatilized, and therefore have the potential of being emitted as respirable particles depending on the air pollution control equipment. The DEP feel this is justification for stack testing and community ambient air sampling of the metals.

One Winter Street • Boston, Massachusetts 02108 • FAX (617) 556-1049 • Telephone (617) 292-5500

Printed on Recycled Paper

The DEP appreciates the opportunity to comment on the "Draft" Report of the Test Burn. If you have any comments or questions on this letter, please call Paul Craffey at (617) 292-5591.

Very truly yours,

Paul Craffey

Paul Craffey,
Project Engineer

cc: Gayle Garman, EPA
Thomas McGrath, AQ LES
John Winkler, AQ SERO

U. S. Army Corps of Engineers
Omaha District, Environmental Branch

Telefax Transmittal Cover Sheet

FAX Recipient: Jim Fitzgerald (ERM - New England, Inc.)

Recipient's FAX #: 617-720-5742

Recipient's Phone #: 617-742-8228

FAX Originator: Kevin M. Howe (CEMRO-ED-ED)

Originator's FAX #: (402) 221-7777

Originator's Phone #: (402) 221-7655

6 Pages (Including This Cover Sheet)

Date: 10/25/91

Message: Jim, please find enclosed a copy of Gayle Garman's comments (+ Curt Bisgard's also) regarding the draft "Test Burn" report from RREL.

Please look these over and note Gayle's perspective with regard to the report (i.e., Gayle has concerns about potential public relations problems due to the report's current form).

After reading these comments, please call me to discuss them.... and to let me know if you have any similar comments to add.

Thanks,
Kevin Howe

P.S. - I will FAX a copy to John Sudnick also.

MEMORANDUM

TO: Kevin Howe, USACE, Omaha District

THROUGH: Mark Otis, USACE, New England Division

FROM: Gayle Garman, USEPA, Region I G2

DATE: October 17, 1991

SUBJECT: Review of DRAFT REPORT on Pilot Scale Incineration of Hot Spot Sediments from New Bedford Harbor at RREL

While this study concludes in a general way that the New Bedford Harbor sediments are treatable by incineration, I believe some of the presentation to be less specific than is desirable. In particular, I am concerned that some of the statements will be taken out of context and reiterated by groups and/or individuals intent on discrediting incineration as a viable and safe treatment for this material. The Draft report is not adequately specific with regard to the following issues:

1. the abstract, introduction, and conclusion should clearly indicate that these sediments are from the Hot Spot;

2. the description of the sediments as fed to the incinerator should describe the sediments as either "wet", or "without dewatering", or "whole", as the data interpretation indicates that the results with regard to PCB destruction may have been significantly influenced by the high (70% or more) water content of the feed;

3. the mass balance accounting of the four trace metals is interpreted as if 100% of the metals have been recovered, when in fact, as little as 38% of the influent metal mass has been recovered. IF the extensive interpretation of this data is included in the final report, there should be either an indication of the experimental error included in the data or repeated <u>caveats</u> regarding the percent of each metal which remains unmeasured and unaccounted for.

Particular comments and proposed editorial changes (indicated by underlining) follow, by page number:

iii ...contaminated marine sediments from the <u>Hot Spot</u> in New Bedford Harbor, a Superfund site... The sediments at this site <u>are</u> contaminated <u>with PCB concentrations of 4,000 to over 200,000 ppm</u>,...

iv In tests with the PCB-spiked sediment feed, <u>incinerated without dewatering,</u> kiln ash....For a native (unspiked)

sediment incinerated without dewatering feed kiln ash contained...

1-1 According to the record of decision..the EPA has identified approximately 10,000 cubic yds of highly contaminated sediment in a 5-acre area of the harbor identified as the Hot Spot Operable Unit.....The EPA requested that test burns be conducted...to support the RD for this Operable Unit.
The sediment at the Hot Spot in the New Bedford Harbor site ...

1-2 The tests were performed in the RKS with the venturi/packed-column scrubber as the primary Air Pollution Control System (APCS).

2-6 TABLE 2-3: The footnote also should indicate whether the concentration is dry weight basis or not.

2-13, and 3-1 Is "TUHC" defined somewhere in the text?

4-4 The kiln ash resulting from the incineration without dewatering of the sediments (both spiked and native)...The kiln ash for the spiked wet sediment feeds....
The kiln ash from the native sediment feed incinerated without dewatering also contained significant PCB levels...

4-7 However, the New Bedford Harbor marine sediments contained substantial moisture, 70% or more.

4-9 Is it possible (KEVIN, and appropriate?) to interpret the 50 to 100 pg/dscm of 2,3,7,8-TCDD toxicity equivalents as a numerical risk, i.e., Excess Lifetime Cancer Risk (ELCR)?

4-14 As shown in the table, very low fractions, less than 1 percent, of the copper and chromium in the sediment feed leached in the TCLP.

4-17 In my opinion, normalizing the metal distributions by the total metal recovery is not an accurate representation of the data when total recoveries range from 38% to 103%. This treatment exceeds the reliability of the data, particularly when there is no effort to explain what happened to the "lost" metals. Are they on the walls of the RKS or the APC? Were they part of the particlates recovered on the second APC, which included a HEPA filter? At the very least this discussion should repeatedly indicate the relative error of this data or the percemt of each metal unaccounted for.

4-19 The kiln ash accounted for 88 to 92 percent of the chromium measured in the discharges and 82 to 89 percent of the copper measured in the discharges...
...At the low-kiln-test-temperature test (test 1)

conditions, the kiln ash accounted for 53 (lead) to 61 (copper) percent of the metals discharged and accounted for.

However, over 30% of the lead that entered the RKS and APC were not measured in any of the discharge streams. In Tests 1,2, and 3b, the portion of lead unaccounted for equals or exceeds the sum of the lead measured in the scrubber flue exit gas and scrubber liquor.

Of the metals measured and accounted for, scrubber exit flue gas and scrubber liquor fractions were higher than the kiln ash fractions at this high-temperature condition.

Indeed, 36 to 42 percent of the cadmium discharged and 42 to 55 percent of the lead discharged escaped the incineration system and the venturi/packed-column scrubber. The data does not support the preceding statement. The data as reported only indicates that 62 to 34 percent of these metals remains unaccounted in the mass balance.

4-19 Thus, calculated scrubber collection efficiencies when compared to measured afterburner exit flue gas concentrations exceed 100 percent.

4-20 With respect to Table 4-14, in my opinion, to present this information as a percent of measured, recovered metal is extrapolating beyond the reliability and credibility of the data. If a presentation of this type is desired it can be a percent of the influent metal, with a column to indicate the percent unaccounted.

4-23 In any event, the data indicate that a wet scrubber system similar to the venturi/packed-column scrubber used in these tests will be able to control HCL emissions to acceptable levels during the incineration of New Bedford Harbor Hot Spot sediments.

5-1 ...to evaluate the potential of incineration as an option to treat contaminated marine sediments from the Hot Spot area in the New Bedford Harbor Superfund site....
The sediments in this area are contaminated by PCB's at concentrations of 4,000 to over 200,000 ppm, and by ...

5-2 Bullet #1: ...However, utilizing sediments that have not been dewatered and a kiln residence time of 0.5 hr, the treated sediments...

Bullet #3: ...The kiln ash discharge accounted for nominally 80 to 90 percent of the measured discharge of these metals.

Bullet #4: ...The kiln ash discharge was 53 percent of the lead accounted for in the discharges and 61 percent of the of the cadmium accounted for in the discharges at the low

kiln temperature. These fractions decreased to the nominal 10 to 20 percent range for cadmium and the 20 percent range for lead, at the high kiln temperature. <u>However, 34 to 62 percent of the lead and up to 48 percent of the cadmium were not accounted for in the mass balances.</u>

5-2 Bullet #5: <u>Based on the recovered scrubber liquor and scrubber flue exit gas concentration,</u> scrubber collection efficiencies were...

I realize that some of the changes proposed above may not be favorably received by the document's authors. However, I think it is in everyone's best interest to provide as accurate and balanced an interpretation of the data as possible.

ENGINEERING REVIEW COMMENTS

Midas Number: _____

OMAHA DISTRICT, CORPS OF ENGINEERS

Review Phase (check one):
- ___ 10%
- ___ EP/C 30% to 35%
- ___ 60%
- ___ 90% to FINAL
- ___ BID
- ___ OTHER

To: CEMRO-ED- ED

Kevin Howe x-7655
PROJECT MANAGER/TEL. NO.

Comments due: _____

Installation: New Bedford MA

Project: New Bedford Treatability Report

COMMENTS BY: Bisgard (LAST NAME) C A (INITIALS) CEMRO-ED-DB (OFFICE SYMBOL) Phone: (402) 221-4436

Date Reviewed: 7 Oct 91

T.O.D. *(Type of Document):* i.e., DR, SP, DA, GE, CB, CE.

D.O.C. *(Discipline of Comment):* e.g., ARC, CIV, COS, ELE, ENV, GEN, GEO, MEC, SIT, SPE, STR, INT.

<<< INSTRUCTIONS AND DEFINITIONS ARE ON THE REVERSE SIDE >>>

T. O. D.	D. O. C.	Dwg Code or Para. #	Sheet # Section or Page	CMT #	COMMENTS: SHEET ___ OF ___	ACT LIN
		Tables	2-6	1	Indicate the date the samples were analyzed	
		Table 2.6	2-10	2	These calculated residence times disagree with the ½ hour residence time stated in the narrative. Please clarify.	

MRO FORM 1 JUL 89 1842

SHEET 1

CEMRO-ED-ED

Date: 10/1/91

MEMORANDUM FOR: see distribution list below

SUBJECT: New Bedford Harbor Superfund Project

Please find attached copies of the "Draft" report from RREL regarding the "Test Burn" performed on the "Hot-Spot" sediment at the IRF in Arkansas in March 1991.

Please review and provide comments back to me NLT COB - 10/18/91. I will forward your comments to RREL for incorporation into the "Final" report.

Thanks,

Kevin M. Howe

Kevin M. Howe
Project Manager
402-221-7655

USACE Distribution:

CEMRO-ED-E (J. Cataldo)
CEMRO-ED-EF (M. Fisher) ✓
CEMRO-ED-EG (J. Trease) ✓
CEMRO-ED-ED (R. Petersen)

CEMRO-ED-G (D. Moses)
CEMRO-ED-GF (J. Bolton)
CEMRO-ED-GC (S. White)

CEMRO-ED-DK (J. Breckenridge) ✓
CEMRO-ED-DB (C. Bisgard) ✓
CEMRO-ED-DJ (M. Adel)
CEMRO-ED-DD (G. Dennis)
CEMRO-ED-DF (O. Patney)
CEMRO-ED-DG (B. Gorup)
CEMRO-ED-DI (R. Lee)

CEMRO-ED-CC (R. Sedlak)

CEMRO-ED-V (S. Moore)

CEMRO-MD-H (M. Cintron) ✓

CEMRD-MD-HB (B. Curnyn)
CEMRD-EP-C (D. Williams)

CENED-PD-L (M. Otis) ✓

CEWES-EE-S (D. Averett)

Non-USACE Distribution:

HAN-CAN1, EPA Region I (M. Sanderson) ✓ (1st class)

MA-DEP (P. Craffey) ✓
ERM-New England, Inc. (J. Fitzgerald) ✓
ERM, Inc. (S. Schory) ✓
Four Nines, Inc. (J. Sudnick) ✓

hand-deliver at 10/2/91 (90%) Review Conference

EPA Lab, RREL (M. Richards)

(file = MEMO-NB2.STD, rev. 10/01/91)

ACUREX Corporation

Environmental Systems Division

September 26, 1991

Ms. Marta K. Richards
U.S. Environmental Protection Agency
Risk Reduction Engineering Laboratory
26 West Martin Luther King Drive
Cincinnati, Ohio 45268

Subject: Preliminary draft report entitled, "Pilot-Scale Incineration of PCB-Contaminated Sediments from the New Bedford Harbor Superfund Site"

Dear Marta:

Enclosed please find five (5) copies of the subject preliminary draft report. This preliminary draft is missing Section 6, the Quality Assurance section. Analyses of matrix spike and method blank samples at EMSL has not yet been completed, so the QA section cannot be drafted. However, I've elected to submit this preliminary draft so that review of general test conclusions can proceed, and so that the Corps of Engineers schedule can be met. At Bob Thurnau's request, I have sent a copy of this draft report directly to Kevin Howe.

The complete draft report will be submitted as soon as QA data are complete and evaluated.

Sincerely,

ACUREX CORPORATION

Larry R. Waterland, Ph.D.
Project Manager

LRW:can

Enclosures (5)

cc: R. Thurnau/RREL
C. Dempsey/RREL
R. Mournighan/RREL
K. Howe/USACE

555 Clyde Avenue, P.O. Box 7044, Mountain View, CA 94039 (415) 961-5700 Telex: 325961 FAX: (415) 964-5145/6523

September 1991

DRAFT

PILOT-SCALE INCINERATION OF PCB-CONTAMINATED SEDIMENTS FROM THE NEW BEDFORD HARBOR SUPERFUND SITE

By
W. E. Whitworth and L. R. Waterland
Acurex Corporation
Environmental Systems Division
Incineration Research Facility
Jefferson, Arkansas 72079

EPA Contract No. 68-C9-0038
Work Assignment 1-3

EPA Project Officer: R. C. Thurnau
Technical Task Manager: M. K. Richards
U.S. Environmental Protection Agency
Waste Minimization, Destruction, and Disposal Research Division
Risk Reduction Engineering Laboratory
Cincinnati, Ohio 45268

RISK REDUCTION ENGINEERING LABORATORY
OFFICE OF RESEARCH AND DEVELOPMENT
U.S. ENVIRONMENTAL PROTECTION AGENCY
CINCINNATI, OHIO 45268

ACUREX Corporation

September 1991

DRAFT

PILOT-SCALE INCINERATION OF PCB-CONTAMINATED SEDIMENTS FROM THE NEW BEDFORD HARBOR SUPERFUND SITE

By
W. E. Whitworth and L. R. Waterland
Acurex Corporation
Environmental Systems Division
Incineration Research Facility
Jefferson, Arkansas 72079

EPA Contract No. 68-C9-0038
Work Assignment 1-3

EPA Project Officer: R. C. Thurnau
Technical Task Manager: M. K. Richards
U.S. Environmental Protection Agency
Waste Minimization, Destruction, and Disposal Research Division
Risk Reduction Engineering Laboratory
Cincinnati, Ohio 45268

RISK REDUCTION ENGINEERING LABORATORY
OFFICE OF RESEARCH AND DEVELOPMENT
U.S. ENVIRONMENTAL PROTECTION AGENCY
CINCINNATI, OHIO 45268

NOTICE

This document is a preliminary draft. It has not been formally released by the U.S. Environmental Protection Agency and should not at this stage be construed to represent Agency policy. It is being circulated for comments on its technical merit and policy implications.

ABSTRACT

A detailed test program was performed at the EPA's Incineration Research Facility (IRF) to evaluate the potential of incineration as an option to treat contaminated marine sediments from the New Bedford Harbor Superfund site near New Bedford, Massachusetts. The sediments at this site contaminated by PCBs and trace metals, chiefly cadmium, chromium, copper, and lead. The purpose of these tests was to evaluate the incinerability of these soils in terms of the destruction of PCBs and the fate of the contaminant trace metals during the incineration process. The test program was designed to evaluate the effects of incineration operating conditions on the composition of the discharge streams.

Four incineration tests were performed, three with sediments spiked with pure PCB Askarel transformer fluid and one with native sediment. Spiking was performed to increase the sediment PCB content to a level which allowed an unambiguous determination of whether a PCB destruction and removal efficiency (DRE) of 99.9999 percent could be achieved. For the three spiked sediment tests, plans were to vary kiln temperature from 816° to 982°C, and kiln excess air from an exit flue gas O_2 of 6 to 10 percent. However, due to the inability to tightly close the rotating kiln seals, kiln exit O_2 levels below 9 percent were not attainable, so the only test condition parameter varied was kiln exit temperature. Average test temperatures were 824° and 984°C.

Test results show that greater than 99.9999 percent PCB DRE was achieved at both kiln temperatures with the an afterburner operated at 1208°C. However, with kiln solids residence

time of 0.5 hr, the treated sediments (kiln ash) are still PCB-contaminated. In tests with the PCB-spiked sediment feed, kiln ash contained 128 to 245 mg/kg PCB, corresponding to 0.3 to 0.5 percent of the spiked feed levels. For a native (unspiked) sediment feed kiln ash contained 100 mg/kg PCB, 1.6 percent of the feed level. The wet scrubber system discharge flue gas contained low levels of PCDDs and higher levels of PCDFs, chiefly total TDCF, PeCDF, and HxCDF. The 2,3,7,8-TCDD toxicity equivalent emissions were in the nominal 50 to 100 pg/dscm range.

Of the contaminant trace metals, chromium and copper were relatively nonvolatile. The kiln ash discharge accounted for nominally 80 to 90 percent of discharged amounted of these metals. These fractions were not affected by kiln temperature in the range tested. Cadmium and lead exhibited relatively volatile behavior, and increasingly so at the higher kiln temperature. The kiln ash discharge accounted for 53 percent of the lead and 61 percent of the cadmium discharged at low kiln temperature. These fractions decreased to the nominal 10 to 20 percent range for cadmium and the 20 percent range for lead at higher kiln temperature. Scrubber exit flue gas fractions (cadmium and lead) and scrubber liquor fractions (cadmium) increased accordingly. Treated sediments would not exhibit the toxicity characteristic (TC) based on their cadmium, chromium, or lead concentrations. However, the scrubber liquor discharge stream was a TC hazardous waste based on lead concentrations for these tests.

Test results suggest that incineration would be an effective treatment option for the site sediments. However, sediment dewatering prior to incineration, or incinerating at higher kiln solids residence times (perhaps up to 1 hr) might be required to yield a treated sediment not contaminated by PCBs. If a wet scrubber were used for particulate and acid gas control, the scrubber blowdown discharge might require further treatment to stabilize leachable lead levels.

In addition, flue gas emissions from a wet scrubber APCS might be of concern such that a dry scrubber technology could prove to be the approach of choice.

TABLE OF CONTENTS

ABSTRACT iii

SECTION 1 INTRODUCTION 1-1

SECTION 2 FACILITY DESCRIPTION, COMPOSITION, AND TEST CONDITIONS 2-1

2.1 ROTARY KILN INCINERATION SYSTEM DESCRIPTION 2-1

2.1.1 Incinerator Characteristics 2-1
2.1.2 Air Pollution Control System 2-4

2.2 TEST WASTE DESCRIPTION 2-5
2.3 TEST CONDITIONS 2-7

SECTION 3 SAMPLING AND ANALYSIS PROCEDURES 3-1

3.1 SAMPLING PROCEDURES 3-5
3.2 LABORATORY ANALYSIS PROCEDURES 3-8

SECTION 4 TEST RESULTS 4-1

4.1 PROXIMATE AND ULTIMATE ANALYSIS RESULTS 4-1
4.2 PCB, SEMIVOLATILE AND VOLATILE ORGANIC, AND DIOXIN/FURAN ANALYSIS RESULTS 4-3

4.2.1 PCB Analysis Results and Destruction Efficiencies 4-3
4.2.2 Semivolatile and Volatile Organic Analysis Results 4-7
4.2.3 Dioxin and Furan Analysis Results 4-9

4.3 TRACE METAL DISCHARGE DISTRIBUTIONS 4-9

4.3.1 Sample Concentrations 4-11
4.3.2 Discharge Distributions 4-14

4.4 PARTICULATE AND HCl EMISSIONS DATA 4-20

TABLE OF CONTENTS (CONCLUDED)

4.4.1 Particulate Load 4-20
4.4.2 HCl Emissions 4-21
4.4.3 Particle Size Distributions 4-23

SECTION 5 CONCLUSIONS 5-1

REFERENCES R-1

APPENDIX A—INCINERATOR OPERATING DATA A-1

APPENDIX B—OPERATING DATA PLOTS B-1

APPENDIX C—LABORATORY ANALYSIS DATA C-1

APPENDIX D—SAMPLING TRAIN WORKSHEETS D-1

LIST OF ILLUSTRATIONS

Figure 2-1 Schematic of the IRF rotary kiln incinerator system. 2-2

Figure 3-1 Sampling matrix. 3-2

Figure 4-1 Afterburner exit particle size distributions. 4-25

LIST OF TABLES

Table 2-1 Design characteristics of the IRF rotary kiln incineration system 2-3

Table 2-2 New Bedford Harbor characterization sample PCB and proximate analysis results 2-6

Table 2-3 New Bedford Harbor characterization sample metals analysis results 2-6

Table 2-4 Target incineration test conditions 2-8

Table 2-5 Incinerator system operating conditions held constant 2-9

Table 2-6 Kiln operating conditions 2-10

Table 2-7 Afterburner operating conditions 2-11

Table 2-8 Air pollution control system operating conditions 2-12

Table 2-9 Continuous emission monitor data 2-13

Table 2-10 Actual versus target operating conditions for the New Bedford Harbor tests 2-15

Table 3-1 Sampling and analysis matrix summary for the New Bedford Harbor sediment incineration tests 3-3

Table 3-2 Continuous emission monitors used for the tests 3-7

Table 3-3 Multiple metals train impinger system reagents 3-8

Table 3-4 Stack Method 5 train impinger system reagents 3-8

Table 3-5 Summary of test samples 3-9

Table 3-6 Polynuclear aromatic hydrocarbons analytes 3-11

LIST OF TABLES (CONCLUDED)

Table 3-7 Volatile organic constituents determined in Method 0030 samples 3-11

Table 4-1 Proximate and ultimate analysis results for the composite sediment feed sample 4-2

Table 4-2 Sediment feed and ash collected 4-2

Table 4-3 Sediment feed PCB analysis results 4-3

Table 4-4 PCB analysis results 4-5

Table 4-5 PCB decontamination effectiveness 4-6

Table 4-6 PCB DRES 4-8

Table 4-7 Volatile organic constituents detected in scrubber exit flue gas 4-8

Table 4-8 Flue gas PCDD/PCDF analysis results 4-10

Table 4-9 2,3,7,8-TCDD toxicity equivalent factors 4-11

Table 4-10 Trace metals analysis results 4-12

Table 4-11 TCLP-leachable trace metal contents 4-14

Table 4-12 Trace metal distributions 4-16

Table 4-13 Normalized trace metal distributions 4-18

Table 4-14 Apparent scrubber collection efficiencies 4-21

Table 4-15 Flue gas particulate levels 4-21

Table 4-16 Flue gas HCl levels 4-22

Table 4-17 Afterburner exit particle size distributions 4-23

SECTION 1

INTRODUCTION

One of the primary missions of the Environmental Protection Agency's (EPA) Incineration Research Facility (IRF) is to support Regional Offices in evaluations of the potential of incineration as a treatment option for wastes generated during remedial actions taken at Superfund sites. EPA Region 1 is conducting the remedial design (RD) for the remediation of a Superfund site located in New Bedford Harbor near New Bedford, Massachusetts. According to the record of decision (ROD) document of 1990 (Reference 1), the EPA has identified approximately 10,000 yd^3 of contaminated sediment in the harbor. Incineration of the dredged sediment is the selected treatment option. In support of the RD, incineration technologies will be examined to determine the optimum equipment configuration and incinerator operating parameters for the waste material. The EPA requested that test burns be conducted at the IRF to support the RD for this Superfund site.

The sediment at the New Bedford Harbor site is contaminated with from 4,000 ppm to more than 200,000 ppm of PCBs (Reference 1). In addition to PCBs, other contaminants are present, including polynuclear aromatic hydrocarbons (PAHs), and trace metals (copper, chromium, lead, and cadmium). The primary objective of this test program was to obtain data to support the RD plans and specifications. Therefore, the test conditions were designed to evaluate the effectiveness of varying incinerator operating conditions in the destruction of PCBs and other pollutants. Specifically, the test program attempted to answer these questions:

- Can incineration effectively destroy PCBs to the required destruction and removal efficiency (DRE) of 99.9999 percent?
- What is the distribution of the contaminant trace metals in the discharge streams during incineration of the sediment?
- What are the effects of incineration excess air and temperature on organic constituent destruction and metals distributions, including the leachability of the metals from the kiln ash?
- What is the effectiveness of the air pollution control system (APCS) in collecting particulate and trace metals?
- Can the treated sediment (i.e., kiln ash) from the incinerator be disposed of as non-hazardous solid waste?

The test program consisted of a set of four incineration tests in the rotary kiln incineration system (RKS) at the IRF. These tests were aimed at evaluating PCB destruction, and the fate of contaminant trace metals in the sediment, as functions of kiln temperature and kiln excess air level. The tests were performed in the RKS with the venturi/packed-column scrubber as the primary APCS.

This report documents the findings of the test program. Section 2 describes the IRF's RKS and incinerator operating conditions during the incineration tests. Section 3 discusses the sampling and analysis procedures employed during the incineration tests. Section 4 presents the incineration test results. Section 5 outlines test conclusions. The appendices provide a complete data set from which any information of interest can be extracted for further study.

SECTION 2

FACILITY DESCRIPTION, COMPOSITION, AND TEST CONDITIONS

The IRF's RKS was used for this test program. A description of the system is presented in Section 2.1. The waste feed composition used in the tests is discussed in Section 2.2. The test matrix and incinerator operating conditions are discussed in Section 2.3.

2.1 ROTARY KILN INCINERATION SYSTEM DESCRIPTION

A process schematic of the RKS is shown in Figure 2-1 and the system design characteristics are listed in Table 2-1. The IRF RKS consists of a primary combustion chamber, a transition section, and a fired afterburner chamber. After exiting the afterburner, flue gas flows through a quench section followed by a primary APCS. The primary APCS for these tests consisted of the venturi/packed-column scrubber. Downstream of the primary APCS, a backup secondary APCS, comprised of a demister, an activated-carbon adsorber, and a high-efficiency particulate (HEPA) filter, is in place. The backup APCS is designed to ensure that organic compound and particulate emissions to the atmosphere are negligible. The main components of the RKS and its APCS are discussed in more detail in the following subsections.

2.1.1 *Incinerator Characteristics*

The rotary kiln combustion chamber has an inside diameter of 1.0 m (39-in) and is 2.49 m (8 ft 2 in) long. The chamber is lined with refractory formed into a frustroconical shape to an average thickness of 18.7 cm (7.375 in). The refractory is encased in a 0.95-cm (0.375-in) thick steel shell. Total volume of the kiln chamber, including the transition section, is 1.90 m^3

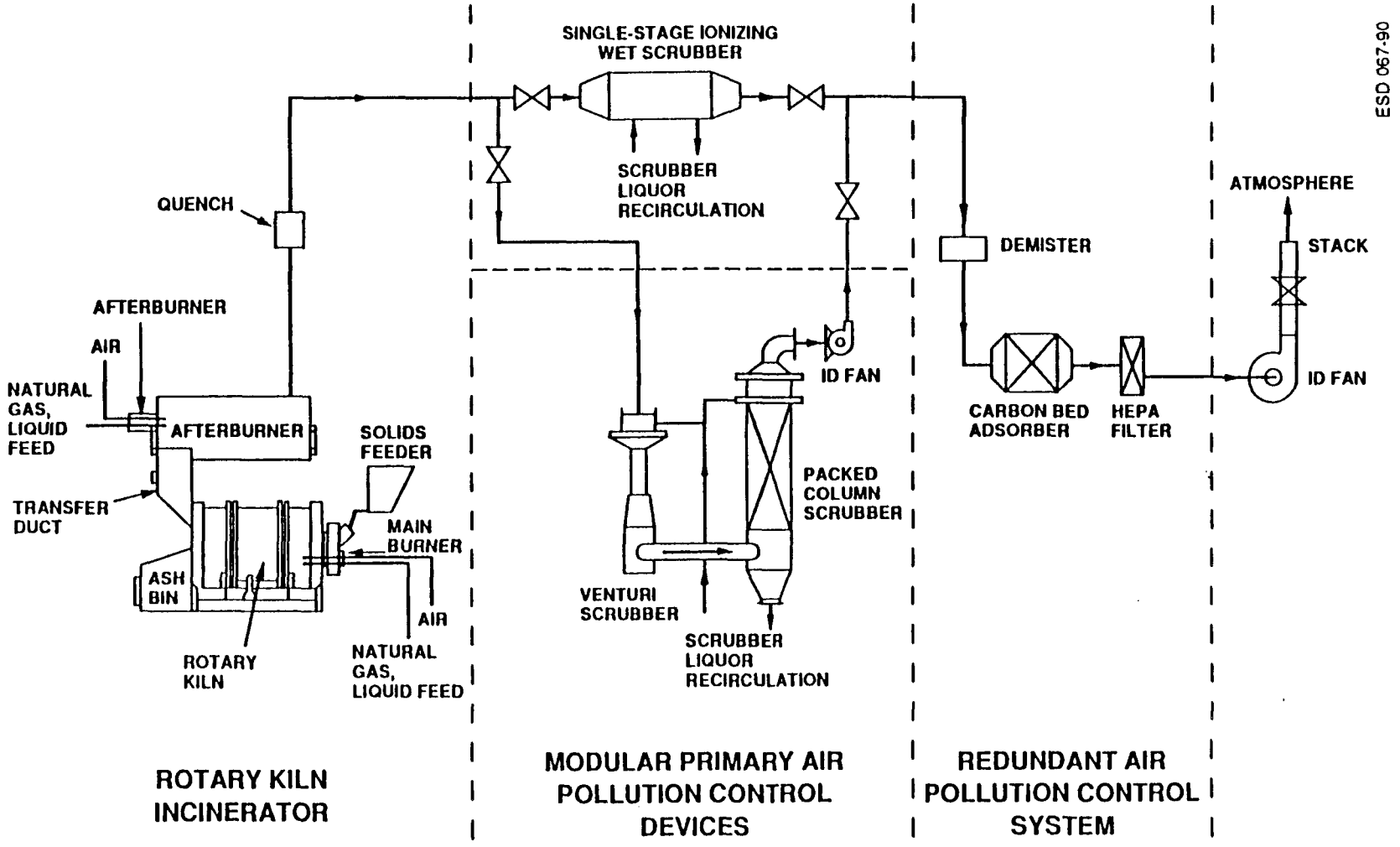

Figure 2-1. Schematic of the IRF rotary kiln incinerator system.

TABLE 2-1. DESIGN CHARACTERISTICS OF THE IRF ROTARY KILN INCINERATION SYSTEM

Characteristics of the Kiln Main Chamber	
Length	2.49 m (8 ft-2 in)
Diameter, outside	1.37 m (4 ft-6 in)
Diameter, inside	Nominal 1.00 m (3 ft-3.5 in)
Chamber volume	1.90 m^3 (67.3 ft^3)
Construction	0.95 cm (0.375 in) thick cold-rolled steel
Refractory	18.7 cm (7.375 in) thick high alumina castable refractory, variable depth to produce a frustroconical effect for moving solids
Rotation	Clockwise or counterclockwise, 0.2 to 1.5 rpm
Solids retention time	1 hr (at 0.2 rpm)
Burner	North American burner rated at 590 kW (2.0 MMBtu/hr) with liquid feed capability
Primary fuel	Natural gas
Feed system:	
Liquids	Positive displacement pump via water-cooled lance
Sludges	Moyno pump via front face, water-cooled lance
Solids	Metered twin-auger screw feeder or fiberpack ram feeder
Temperature (max)	1010°C (1850°F)
Characteristics of the Afterburner Chamber	
Length	3.05 m (10 ft)
Diameter, outside	1.22 m (4 ft)
Diameter, inside	0.91 m (3 ft)
Chamber volume	1.80 m^3 (63.6 ft^3)
Construction	0.63 cm (0.25 in) thick cold-rolled steel
Refractory	15.2 cm (6 in) thick high alumina castable refractory
Gas residence time	1.2 to 2.5 s depending on temperature and excess air
Burner	North American Burner rated at 590 kW (2.0 MMBtu/hr) with liquid feed capability
Primary fuel	Natural gas
Temperature (max)	1200°C (2200°F)
Characteristics of the Ionizing Wet Scrubber APCS	
System capacity, inlet gas flow	85 m^3/min (3000 acfm) at 78°C (172°F) and 101 kPa (14.7 psia)
Pressure drop	1.5 kPa (6 in W.C.)
Liquid flow	15.1 L/min (4 gpm) at 345 kPa (50 psig)
pH control	Feedback control by NaOH solution addition
Characteristics of the Venturi/Packed-Column Scrubber APCS	
System capacity, inlet gas flow	107 m^3/min (3773 acfm) at 1200°C (2200°F) and 101 kPa (14.7 psia)
Pressure Drop	
Venturi scrubber	7.5 kPa (30 in W.C.)
Packed column	1.0 kPa (4 in W.C.)
Liquid flow	
Venturi scrubber	77.2 L/min (20.4 gpm) at 60 kPa (10 psig)
Packed column	116 L/min (30.6 gpm) at 69 kPa (10 psig)
pH control	Feedback control by NaOH solution addition

(67.3 ft^3). Four steel rollers support the kiln barrel. A variable-speed DC-motor coupled to a reducing gear transmission turns the kiln. Rotation speeds can be varied from 0.2 to 1.5 rpm.

The afterburner chamber has a 0.91-m (3-ft) inside diameter, and is 3.05 m (10 ft) long. The afterburner chamber wall is constructed of a 15.2-cm (6-in) thick layer of refractory encased in a 0.63-cm (0.25-in) thick carbon steel shell. The volume of the afterburner chamber is 1.80 m^3 (63.6 ft^3).

2.1.2 Air Pollution Control System

For this test program, the primary APCS consisted of a venturi scrubber followed by a packed-column scrubber in place on the RKS. The flue gas exiting the afterburner passes through a refractory-lined transfer section and enters the quench section, where the flue gas temperature is reduced to approximately 81°C (178°F) by direct injection of aqueous caustic scrubber liquor. The cooled flue gas then enters the venturi scrubber, which is fitted with an automatically adjustable area throat. The scrubber is designed to operate at 7.5 kPa (30 in W.C.) differential pressure, with a maximum liquor flowrate of 77.2 L/min (20.4 gpm). The scrubber liquor, again an aqueous caustic solution, enters at the top of the scrubber and contacts the flue gas to remove entrained particulates and, to some degree, acid gases.

Downstream of the venturi scrubber, the flue gas enters the packed-column scrubber, where additional acid gas and particulate cleanup occurs. The scrubber column is packed with 5.1-cm (2-in) diameter polypropylene ballast saddles to a depth of 2.1 m (82 in). It is designed to operate at 1.0 kPa (4 in W.C.) differential pressure, with a maximum liquor flowrate of 116 L/min (30.6 gpm).

Both the venturi and packed-column scrubbers receive their scrubber liquor from the same recirculation system. This liquor is a dilute NaOH aqueous solution, the pH of which is

monitored continuously by a pH-sensor. An integral pH controller automatically meters the amount of NaOH needed to maintain the set point pH for proper acid gas removal.

At the exit of the packed-column scrubber, a demister removes the bulk of the suspended liquid droplets. In a typical commercial incinerator system, the flue gas would be vented to the atmosphere downstream of this unit. However, at the IRF, a backup APCS is in place to further clean up the flue gas. The flue gas exiting the demister is passed through a bed of activated carbon, to allow the vapor phase organic compounds to be adsorbed.

A set of HEPA filters designed to remove suspended particulate from the flue gas is located downstream of the carbon bed. An inducted draft fan draws and vents the treated effluent gas to the atmosphere.

2.2 TEST WASTE DESCRIPTION

Eight 30-gal drums of sediments were dredged from the Hot Spot area of New Bedford Harbor for these tests. The Hot Spot area is an area of approximately 5 acres along the western bank of the Acushnet River Estuary adjacent to the Aerovox facility. A characterization sample representing each drum dredged was shipped to the IRF for pretest analyses. These samples were subjected to proximate, PCB, and hazardous constituent trace metals analyses. The results of these analyses are shown in Tables 2-2 and 2-3.

As shown in Table 2-2, the average total PCB concentration of the eight drums was 5300 ppm, as received. The level required in an RKS feed to be able to just establish 99.9999 percent DRE at a typical RKS feedrate of 68 kg/hr (150 lb/hr) is 5100 ppm, just below the average dredged drum characterization sample level. Consequently, it was decided to spike the test sediment to higher PCB concentrations to provide a margin in the ability to establish 99.9999 percent DRE. The material used to spike the sediments was an Askarel transformer fluid comprised of roughly 75 percent Aroclor 1242 and 25 percent Aroclor 1254.

TABLE 2-2. NEW BEDFORD HARBOR CHARACTERIZATION SAMPLE PCB AND PROXIMATE ANALYSIS RESULTS

Drum number	PCB concentration[a], mg/kg			Proximate analyses		
	Aroclor 1242	Aroclor 1254	Total	Specific gravity	Moisture, %	Ash, %
A-1	846	277	1,120	1.10	81.6	15.3
A-2	19,500	7,050	26,550	1.03	78.5	16.9
A-3	1,600	544	2,140	1.26	66.9	29.5
A-4	546	264	810	1.09	64.8	33.4
B-1	1,920	551	2,470	1.09	63.0	35.0
B-2	2,500	678	3,180	1.20	75.2	22.1
B-3	3,930	731	4,660	1.29	75.7	21.9
B-4	1,230	242	1,470	1.26	74.9	21.1
Average	4,010	1,290	5,300	1.17	72.6	24.4

[a]Concentrations are on an as-received basis.

TABLE 2-3. NEW BEDFORD HARBOR CHARACTERIZATION SAMPLE METALS ANALYSIS RESULTS

Drum number	Metals concentration[a], mg/kg								
	As	Ba	Cd	Cr	Cu	Pb	Hg	Se	Ag
A-1	1.3	70	2.5	59	580	217	0.75	0.15	<0.5
A-2	2.3	69	2.0	43	670	205	0.85	0.15	<0.5
A-3	0.9	64	5.0	103	650	210	0.80	<0.10	0.9
A-4	2.1	70	4.5	73	407	180	0.65	<0.10	0.9
B-1	1.9	76	4.5	101	555	193	0.70	0.20	1.4
B-2	0.8	64	9.0	216	860	228	0.80	0.10	0.9
B-3	1.0	66	10.0	168	685	210	0.75	<0.10	<0.5
B-4	0.3	63	4.0	136	705	203	0.75	0.15	0.9
Average	1.3	68	5.2	112	639	206	0.76	0.15	0.8

[a]Concentrations are on an as-received basis.

As shown in Table 2-3, the test sediments were contaminated with significant levels of chromium, copper, and lead, and with lower levels of the other hazardous constituent trace metals noted.

For the test program, all eight drums of sediment were shipped to the IRF, where they were combined to form one test feed material. The sediments were combined by transferring the contents of all eight drums into a 250-gal mixing container at the IRF. The mixing was accomplished by using a concrete hoe and mixing the sediments like a batch of concrete. Since the sediments were 60- to 80-percent water, this mixing operation presented no difficulties.

Prior to testing, the combined sediments were repackaged into 1.5-gal fiberpack containers for feeding to the RKS via the ram feeder in place on the system. The PCB spike was added to the sediments during this packaging. The packaging procedure was as follows. Each plastic-bag-lined fiberpack drum was filled with 5.5 kg (12 lb) of combined sediments. Then 0.2 kg (0.5 lb) of spike PCB solution was added. The fiberpack drum contents were manually stirred, the plastic bag secured with a wire tie, and the drum lid secured. Therefore, each fiberpack drum contained 5.7 kg (12.5 lb) of PCB-contaminated sediment. In addition to spiked sediments, 42 fiberpack drums were prepared without the PCB spike for testing using only the native sediment.

2.3 TEST CONDITIONS

The test series was designed to evaluate the effects of incinerator operating conditions on PCB destruction and trace metal distributions in the incinerator discharge streams. The operating parameters varied were kiln exit temperature and kiln excess air (exit flue gas O_2). Three tests were to cover the range of target kiln exit flue gas temperatures of 816 and 982°C (1500 and 1800°F) and target kiln exit O_2 levels of 6 to 10 percent, as shown in Table 2-4. A fourth test (denoted as Test 3a in Table 2-4) was added to produce ash from the native sediment

TABLE 2-4. TARGET INCINERATION TEST CONDITIONS

Test	Kiln exit temperature, °C (°F)	Afterburner exit temperature, °C (°F)	Kiln exit O_2 level, %
1	816 (1500)	1204 (2200)	6
2	982 (1800)	1204 (2200)	6
3a	982 (1800)	1204 (2200)	10
3b	982 (1800)	1204 (2200)	10

only. For all tests, the operating conditions noted in Table 2-5 were to be held at the nominal values noted in the table.

The actual kiln and afterburner operating conditions achieved for each test are summarized in Tables 2-6 and 2-7, respectively. Table 2-8 provides a similar summary of the APCS operating conditions for each test. Continuous emission monitor (CEM) data are summarized in Table 2-9. The ranges and averages of the temperature, CEM, and scrubber pH data presented in Tables 2-6, 2-7, 2-8 and 2-9 were developed for the periods of flue gas sampling, using the data automatically recorded by a personal computer (PC) based data acquisition system. The values given for the remaining parameters were derived from the control room log book data. Problems with the data acquisition system were encountered on the last day of testing. The data for tests 3a and 3b were a combination of the data stored in the PC and log book data.

Transcribed operating-parameter data from the control room logs, recorded at 15-min intervals, are given in Appendix A. Appendix B contains graphic presentations of the flue gas temperatures and emission monitor readings at the kiln and afterburner exits. Appendix B also contains graphic presentations of the flue gas emission monitor readings for the scrubber exit and stack. These data plots are based on incinerator system conditions recorded at 70-s intervals

TABLE 2-5. INCINERATOR SYSTEM OPERATING CONDITIONS HELD CONSTANT

Kiln solids residence time	0.5 hr
Total waste/sediment feedrate	68.2 kg/hr (150 lb/hr)
Scrubber blowdown rate	0 L/min (0 gpm) or minimum operable
Venturi liquor flowrate	76 L/min (20 gpm)
Venturi pressure drop	6.2 kPa (25 in W.C.)
Packed tower liquor flowrate	115 L/min (30 gpm)
Scrubber liquor temperature	49°C (120°F)

TABLE 2-6. KILN OPERATING CONDITIONS

Parameter	Test 1 (3/15/91)	Test 2 (3/19/91)	Test 3a (3/21/91)	Test 3b (3/21/91)
Average natural gas feedrate,				
scm/hr	27	37	44	45
(scfh)	(938)	(1,321)	(1,570)	(1,578)
kW	275	387	460	462
(kBtu/hr)	(938)	(1,321)	(1,570)	(1,578)
Average combustion air flowrate,				
scm/hr	162	205	337	424
(scfh)	(5,740)	(7,250)	(11,910)	(14,960)
Average total air flowrate,				
scm/hr	442	522	687	644
(scfh)	(15,610)	(18,430)	(24,250)	(22,740)
Average draft,				
Pa	5	5	7	10
(in W.C.)	(0.02)	(0.02)	(0.03)	(0.04)
Exit temperature				
Range, °C	755-907	945-1,022	939-1,010	968-985
(°F)	(1,391-1,665)	(1,733-1,871)	(1,723-1,850)	(1,775-1,831)
Average, °C	824	984	981	985
(°F)	(1,516)	(1,803)	(1,797)	(1,805)
Exit O_2				
Range, %	5.8-13.9	6.6-12.0	7.2-11.5	7.0-11.4
Average, %	11.2	9.0	9.3	10.0
Average waste feedrate,				
kg/hr	69	69	67	69
(lb/hr)	(153)	(153)	(147)	(153)
Average waste heat input,				
kW	42	42	41	42
(kBtu/hr)	(145)	(145)	(139)	(145)
Total heat input,				
kW	317	429	501	504
(kBtu/hr)	(1,083)	(1,466)	(1,709)	(1,723)
Calculated residence time, s	4.2	3.1	2.4	2.5

TABLE 2-7. AFTERBURNER OPERATING CONDITIONS

Parameter	Test 1 (3/15/91)	Test 2 (3/19/91)	Test 3a (3/21/91)	Test 3b (3/21/91)
Average natural gas feedrate,				
scm/hr	62	58	59	70
(scfh)	(2,183)	(2,051)	(2,095)	(2,477)
kW	640	601	614	726
(kBtu/hr)	(2,183)	(2,051)	(2,095)	(2,477)
Average combustion air flowrate,				
scm/hr	569	541	488	622
(scfh)	(20,080)	(19,120)	(17,240)	(21,980)
Exit temperature				
Range, °C	1,195-1,221	1,201-1,213	1,164-1,226	1,198-1,214
(°F)	(2,183-2,229)	(2,194-2,216)	(2,181-2,239)	(2,188-2,217)
Average, °C	1,096	1,096	1,096	1,096
(°F)	(2,206)	(2,206)	(2,206)	(2,206)
Exit O_2				
Range, %	3.2-8.2	3.6-7.4	2.9-7.6	4.3-8.0
Average, %	6.4	6.0	6.4	7.0
Calculated residence time, s	1.2	1.2	0.9	1.1

TABLE 2-8. AIR POLLUTION CONTROL SYSTEM OPERATING CONDITIONS

Parameter	Test 1 (3/15/91)	Test 2 (3/19/91)	Test 3a (3/21/91)	Test 3b (3/21/91)
Average quench chamber liquor flowrate,				
L/min	68	68	68	68
(gpm)	(18)	(18)	(18)	(18)
Average venturi scrubber liquor flowrate,				
L/min	76	76	76	76
(gpm)	(20)	(20)	(20)	(20)
Average packed-column scrubber liquor flowrate				
L/min	114	114	114	114
(gpm)	(30)	(30)	(30)	(30)
Scrubber liquor pH,				
Range	9.0-10.6	6.1-7.7	7.1-7.6	4.6-9.2
Average	9.3	7.0	7.4	7.0
Average scrubber makeup flowrate,				
L/min	0	0	0.4	1.9
(gpm)	(0.0)	(0.0)	(0.1)	(0.5)
Average scrubber liquor temperature,				
°C	36	36	37	39
(°F)	(97)	(97)	(99)	(102)
Average scrubber inlet gas temperature,				
°C	81	81	81	81
(°F)	(178)	(178)	(178)	(178)
Average scrubber exit gas temperature,				
°C	49	49	52	59
(°F)	(120)	(120)	(126)	(138)

TABLE 2-9. CONTINUOUS EMISSION MONITOR DATA

Parameter		Test 1 (3/15/91)	Test 2 (3/19/91)	Test 3a (3/21/91)	Test 3b (3/21/91)
Kiln exit					
O_2	Range, %	5.8-13.9	6.6-12.0	7.2-11.5	7.0-11.4
	Average, %	11.2	9.0	9.3	10.0
	Target, %	6.0	6.0	10.0	10.0
Afterburner exit					
O_2	Range, %	3.2-8.2	3.6-7.4	2.9-7.6	4.3-8.0
	Average, %	6.4	6.0	6.4	7.0
	Target, %	7.0	7.0	7.0	7.0
Scrubber exit					
O_2	Range, %	5.8-9.6	6.1-9.2	4.5-9.2	6.2-9.1
	Average, %	8.2	8.0	7.8	8.0
CO	Range, ppm	0-6	0-3	2-5	1-6
	Average, ppm	3	1	4	3
CO_2	Range, %	6.4-9.8	7.1-9.4	7.0-8.9	6.9-9.8
	Average, %	8.0	8.0	7.9	8.0
TUHC	Range, ppm	2-3	1-2	1-2	1-2
	Average, ppm	2	1	1	2
NO_x	Range, ppm	0-103	73-101	79-108	2-115
	Average, ppm	83	87	96	90
Stack					
O_2	Range, %	9.6-12.0	9.0-11.5	8.6-10.9	7.8-10.3
	Average, %	10.8	10.0	9.7	9.0
CO	Range, ppm	4-6	3-5	5-6	6-7
	Average, ppm	5	4	6	7
CO_2	Range, %	4.6-7.0	5.2-7.3	5.3-7.1	5.4-7.9
	Average, %	5.8	6.0	6.2	6.0

on the data acquisition system. In addition, durations of the various flue gas sampling periods, major events, and the cumulative amounts of the waste fed into the incinerator are also included on these plots. These data provide the basis for assembling a complete picture of the actual incinerator operating conditions.

Table 2-10 summarizes the actual incinerator exit temperatures and flue gas levels, including their ranges and averages for each test during flue gas sampling. These are compared with the respective target conditions. For all tests, the average kiln exit temperature was within 8°C (16°F) of the respective target temperature.

The actual O_2 levels at the kiln exit were generally higher than the target concentrations. The higher O_2 levels experienced resulted from higher than expected air inleakage into the kiln chamber due to the inability to tightly secure a rotating kiln seal. The minimum O_2 achievable was 9 percent at the kiln exit. The maximum O_2 tested was 11.2 percent. As a practical matter, these two levels present comparable combustion environments. Consequently, it was not possible to test kiln excess air as a variable. Thus, no discussion concerning the effects of varying kiln excess air on test measurements is given in Section 4.

The afterburner exit O_2 levels were not specified for the test series. Therefore, a nominal O_2 of 7 percent was chosen to keep the afterburner at steady state for the test series. The average afterburner O_2 levels were within 1 percent of this chosen target level.

TABLE 2-10. ACTUAL VERSUS TARGET OPERATING CONDITIONS FOR THE NEW BEDFORD HARBOR TESTS

		Temperature, °C (°F)				Flue gas O_2, %		
Test	Date	Target	Minimum	Maximum	Average	Target	Range	Average
				Kiln exit				
1	3/15/91	816 (1500)	755 (1391)	907 (1665)	824 (1516)	6	5.8 to 13.9	11.2
2	3/19/91	982 (1800)	945 (1733)	1022 (1871)	984 (1803)	6	6.6 to 12.0	9.0
3a	3/21/91	982 (1800)	939 (1723)	1010 (1850)	981 (1797)	10	7.2 to 11.5	9.3
3b	3/21/91	982 (1800)	968 (1775)	999 (1831)	985 (1805)	10	7.0 to 11.4	10.0
				Afterburner exit				
1	3/15/91	1204 (2200)	1195 (2183)	1221 (2229)	1208 (2206)	7	3.2 to 8.2	6.4
2	3/19/91	1204 (2200)	1201 (2194)	1213 (2216)	1208 (2206)	7	3.6 to 7.4	6.0
3a	3/21/91	1204 (2200)	1194 (2181)	1226 (2239)	1208 (2206)	7	2.9 to 7.6	6.4
3b	3/21/91	1204 (2200)	1198 (2188)	1214 (2217)	1208 (2206)	7	4.3 to 8.0	7.0

SECTION 3

SAMPLING AND ANALYSIS PROCEDURES

The sampling and analysis efforts were designed to meet the test objectives and to satisfy IRF hazardous waste management permit compliance requirements. The scope of the sampling effort undertaken during this test program is illustrated in Figure 3-1, in which the sampling locations and the corresponding sample collection methods are identified. Table 3-1 summarizes the sampling and analysis matrix for this program. Specifically, the sampling effort during each test consisted of:

- Collecting a composite sample of the kiln ash
- Collecting a composite sample of the scrubber liquor
- Continuously measuring O_2 levels in the kiln exit and afterburner exit flue gases; O_2, CO, CO_2, NO_x, and TUHC levels at the venturi/packed-column scrubber exit; and O_2, CO, and CO_2 levels in the stack
- Sampling flue gas at the scrubber system exit for PAHs and PCBs
- Sampling flue gas at the scrubber system exit for polychlorinated dibenzo-p-dioxins (PCDDs) and dibenzofurans (PCDFs)
- Sampling flue gas at the scrubber system exit for volatile organics
- Sampling flue gas upstream of the scrubber system for particle size distribution

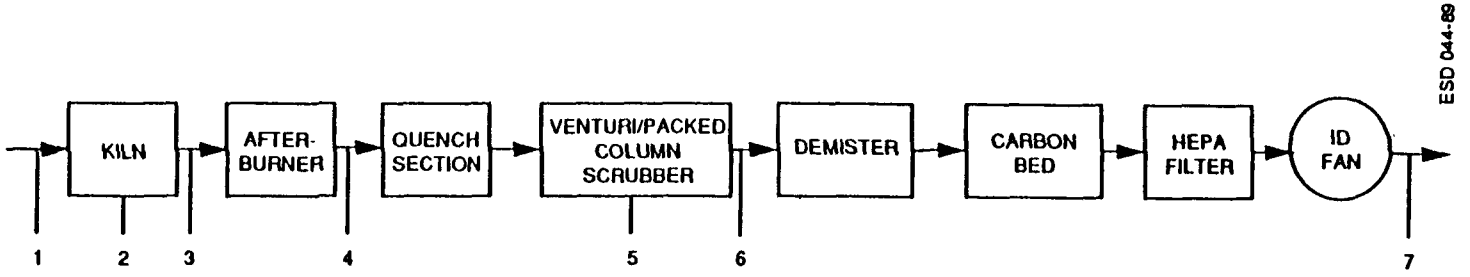

Sampling point	Sediment feed	Kiln ash	Venturi/ packed-column scrubber liquor	Continuous flue gas monitoring	Method 0010 (PCBs and PAHs)	Method 0010 (PCDDs/ PCDFs)	Method 0030 (Volatile organics)	Particle size distribution (Cascade impactor)	Method 5 (Particulate, trace metals)	Method 5 (Particulate, HCl)
1	X									
2		X								
3				X						
4				X				X	X	
5			X							
6				X	X	X	X		X	X
7				X						X

Figure 3-1. Sampling matrix.

TABLE 3-1. SAMPLING AND ANALYSIS MATRIX SUMMARY FOR THE NEW BEDFORD HARBOR SEDIMENT INCINERATION TESTS

Sample	Location	Sampling procedure	Analysis		
			Parameter	Method	Frequency
Native sediment	Shipment drums prior to mixing	Thief/composite	PCBs	Method 3540 extraction with Method 8080 analysis for PCBs[a]	1 composite/drum
			Trace metals (Cd, Cr, Cu, Pb)	Method 3050 digestion with Method 6010 analysis[a]	1 composite/drum
Askarel spike	Storage container	Grab	PCBs	Dilution; direction injection GC analysis by Method 8080[a]	1 sample
Combined sediment feed	Sediment mixing container prior to packaging	Thief/composite	Proximate analysis:		1 composite
			Ash content	ASTM-D-3174	
			Moisture	ASTM-D-3173	
			Heating value	ASTM-D-3286	
			Ultimate analysis (C, H, O, N, S, Cl)	ASTM-D-3176	
			PCBs, PAHs	Method 3540 extraction with Method 8270 analysis for PAHs and Method 8080 for PCBs[a]	1 composite
			Trace metals (Cd, Cr, Cu, Pb)	Method 3050 digestion with Method 6010 analysis[a]	1 composite
			TCLP extraction	Method 1311[b]	1 composite
Combined sediment feed TCLP leachate			Trace metals (Cd, Cr, Cu, Pb)	Method 3010 digestion with Method 6010 analysis[a]	1 composite
Kiln ash	Kiln ash pit	Thief/composite	PCBs, PAHs	Method 3540 extraction with Method 8270 analysis for PAHs and Method 8080 for PCBs[a]	1 composite/test
			Trace metals (Cd, Cr, Cu, Pb)	Method 3050 digestion with ICAP analysis by Method 6010[a]	1 composite/test
			TCLP extraction	Method 1311[b]	1 composite/test
Kiln ash TCLP leachate			Trace metals (Cd, Cr, Cu, Pb)	Method 3010 digestion and ICAP analysis by Method 6010[a]	1 composite/test

[a]Reference 2, SW-846.
[b]Reference 3, 40 CFR 261, Appendix II.

TABLE 3-1. (concluded)

Sample	Location	Sampling procedure	Analysis		
			Parameter	Method	Frequency
Scrubber liquor	Scrubber system collection tank	Tap	PCBs, PAHs	Method 3510 extraction with Method 8270 analysis for PAHs and Method 8080 for PCBs[a]	1 composite test
			Trace metals (Cd, Cr, Cu, Pb)	Method 3010 digestion and ICAP analysis by Method 6010[a]	1 composite/test
Flue gas	Afterburner exit	Method 5[c] modified for multiple metals capture[d]	Trace metals (Cd, Cr, Cu, Pb)	Digestion by Method 3050 (particulate) or Method 3010 (impingers), and ICAP analysis by Method 6010	
			Particulate	Method 5	1/test
		Cascade Impactor (CARB 501[e])	Particulate size distribution	Gravimetric analysis of impactor stages	1/test
Flue gas	Scrubber exit	Method 5[c]	Particulate	Method 5[c]	1/test
			HCl	Analysis of impinger solution for Cl by specific ion electrode	1/test
		Method 5[c] modified for multiple metals capture	Trace metals (Cd, Cr, Cu, Pb)	Digestion by Method 3050 (particulate) or Method 3010 (impingers), and ICAP analysis by Method 6010[a]	1/test
		Method 0010[a]	PAHs and PCBs	Method 3540 Soxhlet extraction and analysis by Method 8270 for semivolatile organics and Method 8080 for PCBs[a]	1/test
		Method 0010[a]	PCDDs/PCDFs	Extraction and analysis by Method 8290[a]	1/test
		Method 0030[a]	Volatile organics	Method 5040[a]	1/test
Stack gas	Stack, downstream of carbon bed/HEPA filter	Method 5[c]	Particulate	Method 5[c]	1/test
			HCl	Analysis of impinger solution for Cl by specific ion electrode	1/test

[a]Reference 2, SW-846.
[c]Reference 4, 40 CFR 60, Appendix A.
[d]Reference 5, Incinerator Metals Guidance.
[e]Reference 6, CARB Methods.
[f]Reference 7, Water and Wastes.

- Sampling flue gas upstream and downstream of the scrubber system for particulate and trace metals, using a variation of EPA Method 5 modified for multiple metals capture
- Sampling downstream of the scrubber system and at the stack downstream of the secondary APCS for particulate and HCl using Method 5 to comply with permit requirements

In addition, grab/composite samples of the waste feed from each drum were taken before the wastes were mixed, and a grab/composite sample of the mixed waste feed was taken.

3.1 SAMPLING PROCEDURES

The waste was received in eight 30-gal drums. Each drum was thief sampled before its contents were poured into the 250-gal mixing container. The waste was mixed by agitating it with a concrete hoe. After the waste was mixed, a grab sample was taken from six different locations of the mixing container and composited. All waste was packaged into 1.5-gal fiberpack drums the day before the first test started. A total of 42 fiberpack drums of native sediment was packaged without spike solution. The remaining waste was packaged along with the spike solution into the fiberpack drums, and the waste and spike solution were mixed before the fiberpack drums were sealed.

On a test day, the incinerator was brought to nominally steady operation at test conditions while firing auxiliary fuel (natural gas) alone, then waste feed was initiated. Flue gas sampling was started about 1 hr after waste feed initiation.

The kiln ash was continuously removed from the ash catch bin by a steel auger and conveyed into an initially clean 55-gal steel drum. The entire ash transfer system was sealed to prevent sample loss and contamination. A representative sample was collected from the ash collection drum at the conclusion of each test.

Each test was run with scrubber system operating at, or near, total recycle (zero blowdown). At the conclusion of each test day, the incinerator was operated on natural gas for 2 hr after waste feed cessation. After the 2-hr cleanout time, the scrubber system was drained to a storage tank. A composite scrubber liquor sample was collected from the collection tank after draining was complete.

The flue gas, at four locations (kiln exit, afterburner exit, venturi/packed-column scrubber exit, and the stack), was continuously monitored for location-specific combinations of O_2, CO, CO_2, NO_x, and TUHC. The CEMs available at the IRF, and the locations they monitored during these tests, are summarized in Table 3-2.

The afterburner exit flue gas particulate particle size distribution was determined by using a cascade impactor train (California Air Resources Board [CARB] Method 501, Reference 6). The flue gas was extracted from the afterburner transfer duct, and the particulate matter was classified into several size ranges between 0.3 and 10 μm. The larger particles were removed with an upstream "precutter" cyclone separator.

The afterburner exit and the scrubber exit were sampled for particulate matter and trace metals, using a variation of the Method 5 sampling train with impingers as specified for multiple metals sampling (Reference 4) and noted in Table 3-3.

The scrubber exit flue gas and the stack gas were sampled for particulate and HCl, using a Method 5 train with impingers charged as indicated in Table 3-4. The stack gas sampling protocol was required to satisfy the requirements of the IRF's hazardous waste management permit.

The scrubber exit was also sampled for PAHs and PCBs, using an EPA Method 0010 train (Reference 2). A second Method 0010 train was used to sample for PCDDs/PCDFs at the

TABLE 3-2. CONTINUOUS EMISSION MONITORS USED FOR THE TESTS

Location	Monitor				Range
	Constituent	Manufacturer	Model	Principle	
Kiln exit	O_2	Beckman	755	Paramagnetic	0-10 percent 0-25 percent 0-100 percent
Afterburner exit	O_2	Beckman	755	Paramagnetic	0-10 percent 0-25 percent 0-100 percent
Scrubber exit	CO	Horiba	VIA 500	NDIR	0-50 ppm 0-500 ppm
	CO_2	Horiba	PIR 2000	NDIR	0-20 percent 0-80 percent
	Unheated TUHC	Beckman	402	FID	0-10 ppm 0-100 ppm 0-1,000 ppm
	O_2	Teledyne	326A	Fuel cell	0-5 percent 0-10 percent 0-25 percent
	NO_x	Thermo Electron	10 AR	Chemiluminescent	0-75 ppm to 0-10,000 ppm in multiples of 2
Stack	CO	Horiba	VIA 500	NDIR	0-50 ppm 0-500 ppm
	CO_2	Horiba	PIR 2000	NDIR	0-20 percent 0-80 percent
	O_2	Teledyne	326A	Fuel cell	0-5 percent 0-10 percent 0-25 percent

TABLE 3-3. MULTIPLE METALS TRAIN IMPINGER SYSTEM REAGENTS

Impinger number	Reagent	Quantity
1	Empty	
2	0.1 N NaOH	100 mL
3	5 percent HNO_3 and 10 percent H_2O_2	100 mL
4	5 percent HNO_3 and 10 percent H_2O_2	100 mL
5	Silica gel	750 g

TABLE 3-4. STACK METHOD 5 TRAIN IMPINGER SYSTEM REAGENTS

Impinger number	Reagent	Quantity
1	0.1 N NaOH	100 mL
2	0.1 N NaOH	100 mL
3	0.1 N NaOH	100 mL
4	Silica gel	750 g

scrubber exit. Volatile organic sampling train (VOST) sampling by EPA Method 0030 (Reference 2) was performed at the scrubber exit.

3.2 LABORATORY ANALYSIS PROCEDURES

The numbers of samples collected for analysis during the incineration test series are summarized in Table 3-5. The sample collection procedures resulted in eight individual waste sediment samples and one composite waste sediment sample. One sample of the PCB spike material was taken, resulting in a total of 10 waste feed samples for the test series. One set of kiln ash samples was taken for each test. This includes the extra test with native sediment only as the waste feed. No flue gas characterization was done for the native sediment test; however, one set of flue gas characterization samples was collected for each of the other tests. Scrubber liquor samples were collected for all tests except the native sediment test.

TABLE 3-5. SUMMARY OF TEST SAMPLES

Sample type	Analyte	Number of samples: Each test	Number of samples: Total
Individual sediment feed (before combining)	PCBs		8
	Trace metals (Cd, Cr, Cu, Pb)		8
Askarel spike	PCBs		1
Combined sediment feed	Proximate, ultimate, and silica		1
	PCBs and PAHs		1
	Trace metals (Cd, Cr, Cu, Pb)		1
	TCLP extraction		1
Sediment feed TCLP leachate	Trace metals (Cd, Cr, Cu, Pb)		1
Kiln ash	PCBs and PAHs	1	4
	Trace metals (Cd, Cr, Cu, Pb)	1	4
	TCLP extraction	1	4
Kiln ash TCLP leachate	Trace metals (Cd, Cr, Cu, Pb)	1	4
Composite scrubber liquor	PCBs and PAHs	1	3
	Trace metals (Cd, Cr, Cu, Pb)	1	3
Afterburner exit:			
Particulate/metals train:			
Probe wash filter	Trace metals (Cd, Cr, Cu, Pb)	1	3
Impingers (1,2,3, and 4 combined)	Trace metals (Cd, Cr, Cu, Pb)	1	3
Venturi/packed-column scrubber exit flue gas:			
Particulate/metal train:			
Probe wash/filter	Trace metals (Cd, Cr, Cu, Pb)	1	3
Impingers (1, 2, 3, and 4 combined)	Trace metals (Cd, Cr, Cu, Pb)	1	3
Method 0010 train	PCBs and PAHs	1	3
Method 0010 train	PCDDs/PCDFs	1	3
Method 0030			
Sample trap pair	Volatile organics	3	9
Particulate/HCl train:			
Probe wash/filter	Particulate	1	3
Impingers (1, 2, and 3 combined)	Chloride	1	3
Stack gas:			
Particulate/HCl train:			
Probe wash/filter	Particulate	1	3
Impingers (1, 2, and 3 combined)	Chloride	1	3

An aliquot of the composited sediment feed and each test's kiln ash was subjected to the TCLP leaching procedure and analyzed for cadmium, chromium, copper, and lead. Waste feed samples, kiln ash samples, and scrubber liquor samples were analyzed separately for:

- PCBs by Method 3540 extraction and Method 8080 analysis
- PAHs by Method 3540 extraction and Method 8270 analysis for the analytes listed in Table 3-6
- Cadmium, chromium, copper, and lead

Semivolatile organic constituents were determined by Method 8270. Solid samples (i.e., sediment feed, kiln ash, and Method 0010 train samples) were Soxhlet-extracted (Method 3540) prior to analysis; liquid samples (i.e., scrubber liquor) were liquid/liquid-extracted (Method 3510). Trace metals analyses were performed by inductively coupled argon plasma (ICAP) spectrometry (Method 6010). Solid samples were digested by Method 3050 for analysis; liquid samples were digested by Method 3010. PCB analyses were performed by Method 8080.

Flue gas particulate load was determined by desiccating the filter and probe wash of the venturi/packed-column scrubber exit and the stack Method 5/HCl train. HCl at the scrubber exit and stack was determined by analyzing the combined impinger solutions from the respective Method 5/HCl trains for chloride, using specific ion electrode analysis.

Scrubber exit flue gas was sampled for PCDDs/PCDFs by Method 0010. Sampling train samples were analyzed by Method 8290. The scrubber exit flue gas was also sampled for volatile organics by Method 0030. Collected sample traps were analyzed by Method 5040. The target analytes are listed in Table 3-7.

The composite waste sediment feed sample was subjected to proximate (moisture, ash content, and heat content) analysis, and ultimate (C, H, O, N, S, Cl) analysis according to ASTM methods.

TABLE 3-6. POLYNUCLEAR AROMATIC HYDROCARBONS ANALYTES

Naphthalene
Acenapththene
Fluoranthene
Phenanthrene
Pyrene
Benzo(a)anthracene
Benzo(a)pyrene

TABLE 3-7. VOLATILE ORGANIC CONSTITUENTS DETERMINED IN METHOD 0030 SAMPLES

Acetone	cis-1,3-Dichloropropene
Benzene	Trans-1,3-Dichloropropene
Bromodichloroethane	Ethylbenzene
Bromoform	2-Hexanone
2-Butanone	4-Methyl-2-pentanone
Carbon disulfide	Methylene chloride
Carbon tetrachloride	Styrene
Chlorobenzene	1,1,2,2-Tetrachloroethane
2-Chloroethylvinylether	Tetrachloroethylene
Chloroform	Toluene
Dibromochloromethane	1,1,1-Trichloroethane
1,1-Dichloroethane	1,1,2-Trichloroethane
1,2-Dichloroethane	Trichloroethylene
1,1-Dichloroethene	Vinyl acetate
Trans-1,2-Dichloroethene	Xylenes (total)
1,2-Dichloropropane	

Ultimate analyses were performed by Galbraith Laboratories in Knoxville, Tennessee. Semivolatile organic, PCB, and HCl analyses were performed at the IRF analytical laboratory. Trace metal and Method 0030 sample analyses were performed by the Environmental Monitoring and Support Laboratory (EMSL) in Cincinnati, Ohio. The PCDDs/PCDFs analyses were performed by Triangle Laboratories, Inc., in Research Triangle Park, North Carolina.

SECTION 4

TEST RESULTS

The results of the test program are discussed in this section. Test results are grouped by analyte class. Thus, Section 4.1 presents the sediment feed proximate and ultimate analysis results. Section 4.2 discusses the PCB and other organic constituent measurements, including the DREs obtained for the PCBs and the effectiveness of incineration in decontaminating test sediments. Section 4.3 discusses the trace metal measurements, including the distributions of contaminant metals among the incinerator discharge streams as a function of incinerator operation. Finally, Section 4.4 presents the results of the flue gas particulate, HCl, and particle size distribution measurements.

4.1 PROXIMATE AND ULTIMATE ANALYSIS RESULTS

The proximate and ultimate analysis results for the composite sediment sample analyzed are presented in Table 4-1. Comparing the data in Table 4-1 with those in Table 2-2 shows that the composite sediment prepared for testing had a slightly lower moisture content and a slightly higher ash content than the characterization samples taken for pretest analysis.

Table 4-2 summarizes the cumulative sediment weight fed for each test and the total amount of kiln ash collected. As indicated in the table, between 25 and 30 percent of the sediment weight fed for a given test was collected as kiln ash. This fraction agrees quite well with the ash content of the sediment obtained by proximate analysis shown in Table 4-2.

TABLE 4-1. PROXIMATE AND ULTIMATE ANALYSIS RESULTS FOR THE COMPOSITE SEDIMENT FEED SAMPLE

Proximate Analyses	
Moisture, %	63.9
Ash, %	28.5
Volatile matter, %	5.9
Fixed carbon, %	1.4
Higher heating value, kJ/kg	2200
(Btu/lb)	(948)
Ultimate Analysis, %	
C	11.1
H	1.2
N	0.4
S	0.6
Cl	0.9

TABLE 4-2. SEDIMENT FEED AND ASH COLLECTED

			Ash collected	
Test		Total sediment fed, kg (lb)	Weight, kg (lb)	Fraction of feed, %
1	(3/15/91)	284 (625)	85 (187)	30
2	(3/19/91)	284 (625)	76 (168)	27
3a	(3/21/91)	229 (504)	62 (136)	27
3b	(3/22/91)	318 (700)	80 (175)	25

4.2 PCB, SEMIVOLATILE AND VOLATILE ORGANIC, AND DIOXIN/FURAN ANALYSIS RESULTS

Results of the organic analyses of test program samples and their implications are discussed in the following subsections. The discussion is organized by organic analyte.

4.2.1 PCB Analysis Results and Destruction Efficiencies

Table 4-3 summarizes the results of the PCB analyses of the sediment feed samples analyzed. Recall from Section 3 that samples of each of the eight drums received were taken for PCB analysis prior to combining them into the composite sediment feed. A composite feed and the Askarel spiking liquid were also analyzed.

Comparing the data in Table 4-3 with the characterization sample PCB analysis data in Table 2-2 shows that all samples taken from the drums delivered to the IRF contained significantly higher levels of both contaminant PCB formulations (i.e., Aroclor 1242 and Aroclor 1254) than did the characterization samples analyzed prior to sediment shipment. Only

TABLE 4-3. SEDIMENT FEED PCB ANALYSIS RESULTS

	PCB Concentration, mg/kg	
Sample	Aroclor 1242	Aroclor 1254
Drum A-1	11,400	3,030
Drum A-2	15,100	5,680
Drum A-3	3,820	1,170
Drum A-4	1,230	715
Drum B-1	4,490	1,700
Drum B-2	4,410	1,050
Drum B-3	8,170	1,830
Drum B-4	1,930	447
Average	6,320	1,950
Composite sediment	4,850	1,300
Askarel spiking liquid	753,000	24,700

for drums A-2 and B-4 were the characterization sample analysis results comparable to levels measured in the delivered drum samples. The combined drum composite sediment PCB levels were comparable to, though less than, the eight-drum average level. The Askarel spiking liquid was pure PCB, comprised of roughly 75 percent Aroclor 1242 and 25 percent Aroclor 1254.

Table 4-4 summarizes the PCB contents of each incineration test sample. As indicated, the spiked sediment feed contained 3.48 percent Aroclor 1242 and 1.11 percent Aroclor 1254. The kiln ash resulting from the incineration of the sediments (both spiked and native) had substantially reduced, though still significant, PCB contents. The kiln ash for the spiked sediment feeds contained between 96 and 177 mg/kg of Aroclor 1242, and between 32 and 84 mg/kg of Aroclor 1254. These levels were between 0.3 and 0.5 percent of the spiked sediment feed level of Aroclor 1242, and between 0.3 and 0.8 percent of the spiked sediment feed level of Aroclor 1254. Interestingly, within the range of the variability of the data, the higher kiln temperature tested for Tests 2 and 3 was no more effective in "removing" PCBs from the kiln ash than the lower temperature tested in Test 1.

The kiln ash from the native sediment feed test also contained significant PCB levels, corresponding to 1.2 percent of the native sediment concentration for Aroclor 1242, and 3.4 percent for Aroclor 1254.

No scrubber liquor sample contained detectable PCB at practicable quantitation limits (PQLs) of 1 μg/L for Aroclor 1242, and 0.3 μg/L for Aroclor 1254. The scrubber exit flue gas contained low, though measurable, levels of both PCB formulations in Tests 1 and 2.

Table 4-5 summarizes the degree of PCB decontamination achieved in each test, in terms of the fraction of the amount of PCB introduced in the incinerator feed accounted for by the resulting kiln ash. As shown in the table, about 0.1 percent of the Aroclor 1242 and about 0.1 to 0.2 percent of the Aroclor 1254 feed in spiked sediments was accounted for in the kiln ash

TABLE 4-4. PCB ANALYSIS RESULTS

Sample	PCB Concentration	
	Aroclor 1242	Aroclor 1254
Spiked sediment feed, %	3.48	1.11
Test 1:		
Kiln ash, mg/kg	133	84
Percent of feed	0.38	0.76
Scrubber liquor, μg/L	<1	<0.3
Scrubber exit flue gas, μg/dscm	0.76	0.22
Test 2:		
Kiln ash, mg/kg	96	32
Percent of feed	0.28	0.29
Scrubber liquor, μg/L	<1	<0.3
Scrubber exit flue gas, μg/dscm	0.54	0.21
Test 3b:		
Kiln ash, mg/kg	177	68
Percent of feed	0.51	0.61
Scrubber liquor, μg/L	<1	<0.3
Scrubber exit flue gas, μg/dscm	<0.26	<0.09
Composite native feed, mg/kg	4850	1300
Test 3a:		
Kiln ash, mg/kg	57	44
Percent of feed	1.2	3.4
Scrubber liquor, μg/L	<1	<0.3

TABLE 4-5. PCB DECONTAMINATION EFFECTIVENESS

Parameter	Aroclor 1242	Aroclor 1254
Test 1:		
Sediment feed		
Concentration, %	3.48	1.11
Amount fed, kg	9.87	3.15
Kiln ash		
Concentration, mg/kg	133	84
Amount discharged, g	11.3	7.1
Fraction of amount fed, %	0.11	0.22
Test 2:		
Sediment feed		
Concentration, %	3.48	1.11
Amount fed, kg	9.87	3.15
Kiln ash		
Concentration, mg/kg	96	32
Amount discharged, g	7.3	2.5
Fraction of amount fed, %	0.07	0.08
Test 3a:		
Sediment feed		
Concentration, %	0.485	0.130
Amount fed, kg	1.11	0.30
Kiln ash		
Concentration, mg/kg	57	44
Amount discharged, g	3.5	2.7
Fraction of amount fed, %	0.32	0.91
Test 3b:		
Sediment feed		
Concentration, %	3.48	1.11
Amount fed, kg	11.05	3.52
Kiln ash		
Concentration, mg/kg	177	68
Amount discharged, g	14.1	5.3
Fraction of amount fed, %	0.13	0.15

produced. The remaining 99.8 to 99.9 percent was removed and largely destroyed, as discussed below. Higher fractions of feed PCBs were present in the kiln ash from the native sediment test: 0.3 percent for Aroclor 1242, and 0.9 percent for Aroclor 1254.

The data shown in Tables 4-4 and 4-5 confirm that incineration under the conditions tested was not sufficient to completely decontaminate the sediments. The incineration temperatures tested, 820° to 980°C (1,500° to 1,800°F), were typical of those that have resulted in successful decontamination, as was the kiln solids residence time (0.5 hr). However, the New Bedford Harbor marine sediments contained substantial moisture, over 60 percent. Evidently, with such high moisture content, solids bed temperatures were not raised to levels needed for more complete PCB destruction in the residence time available. It is suspected that longer solids residence times, perhaps on the order of 1 hr, would allow essentially complete, or certainly more complete, PCB decontamination.

Table 4-6 takes the scrubber exit flue gas PCB concentrations noted in Table 4-4, and combines them with sediment feedrate and flue gas flowrate data to give the PCB DREs achieved for the tests. As shown in the table, greater than the regulation-required 99.9999 percent PCB DRE was achieved for all three tests.

4.2.2 Semivolatile and Volatile Organic Analysis Results

As noted in Section 3, the seven PAH compounds listed in Table 3-6 were analyzed for in composite sediment feed; and each kiln ash, scrubber liquor, and scrubber exit flue gas sample for Tests 1, 2, and 3b. None were detected in any sample at PQLs of 50 mg/kg in sediment feed, 1.3 mg/kg in kiln ash, 20 μg/L in scrubber liquor, and 6 μg/dscm in scrubber exit flue gas.

In addition, as noted in Section 3, the scrubber exit flue gas was sampled for volatile organic target compound listed (TCL) constituents by Method 0030 (VOST). The constituents analyzed for are tabulated in Table 3-7. Analysis results are summarized in Table 4-7.

TABLE 4-6. PCB DREs

Parameter		Test 1 (3/15/91)	Test 2 (3/19/91)	Test 3b (3/21/91)
Sediment feed:				
Sediment feedrate, kg/hr		69.5	69.5	69.3
Aroclor 1242 feedrate, g/hr		2420	2420	2410
Aroclor 1254 feedrate, g/hr		773	773	771
Scrubber exit flue gas:				
Flue gas flowrate, dscm/min		33.9	32.9	30.6
Aroclor 1242	concentration, µg/dscm	0.76	0.54	<0.26
	emission rate, µg/hr	1.6	1.1	<0.5
	DRE, %	99.999936	99.999956	>99.999980
Aroclor 1254	concentration, µg/dscm	0.22	0.21	<0.09
	emission rate, µg/hr	0.5	0.5	<0.2
	DRE, %	99.99994	99.99994	>99.99998

TABLE 4-7. VOLATILE ORGANIC CONSTITUENTS DETECTED IN SCRUBBER EXIT FLUE GAS

	Concentration, µg/dscm		
Constituent	Test 1 (3/15/91)	Test 2 (3/19/91)	Test 3b (3/21/91)
Acetone	5.1	ND[a]	ND
Benzene	ND	ND	0.9
Bromoform	ND	ND	0.8
Carbon disulfide	4.1	0.6	0.4
Carbon tetrachloride	ND	ND	0.2
Chlorobenzene	1.6	3.9	ND
Chloroform	0.2	ND	0.4
1,1-Dichloroethene	0.6	ND	0.2
Methylene chloride	240	ND	24
Toluene	0.6	3.7	ND
Trichloroethene	0.1	ND	ND
All others[b]	ND	ND	ND

[a]ND = Not detected, <0.1 µg/dscm.
[b]See Table 3-7.

4.2.3 Dioxin and Furan Analysis Results

As noted in Section 3, the scrubber exit flue gas was also sampled and analyzed for PCDDs/PCDFs. Results are summarized in Table 4-8. As shown, total tetra-CDD (TCDD), penta-CDD (PeCDD), hexa-CDD (HxCDD), and hepta-CDD (HpCDD) levels were in the nominal 10 to 20 pg/dscm range for all three tests, with octa-CDD (OCDD) levels in the 30 to 60 pg/dscm range. Flue gas PCDF levels were significantly greater, ranging up to about 2800 pg/dscm for TCDF.

The 2,3,7,8-TCDD toxicity equivalents corresponding to the isomer concentrations noted are also given in Table 4-8. The toxicity equivalency factors given in Table 4-9 were used to calculate the toxicity equivalents noted in Table 4-8. As shown, the scrubber exit flue gas PCDD/PCDF levels corresponded to 2,3,7,8-TCDD toxicity equivalents ranging from nominally 50 to 100 pg/dscm.

4.3 TRACE METAL DISCHARGE DISTRIBUTIONS

As noted in Section 1, one of the primary objectives of the test program was to evaluate the fate of the contaminant trace metals cadmium, chromium, copper, and lead in the incineration treatment of the New Bedford Harbor sediments. Another primary objective was to investigate whether incineration conditions affected the distribution of these metals in the incinerator discharges, including their leachability from the kiln ash. Concentrations of these metals were measured in the kiln ash, scrubber liquor, afterburner exit flue gas, scrubber exit flue gas, and kiln ash TCLP leachate. Based on these concentrations, the trace metal distributions among the discharge streams were determined. Results of these evaluations are discussed in the following subsections.

TABLE 4-8. FLUE GAS PCDD/PCDF ANALYSIS RESULTS

Analyte	Scrubber exit flue gas concentration, pg/dscm		
	Test 1 (3/15/91)	Test 2 (3/19/91)	Test 3b (3/21/91)
Total TCDD	16	10	8
2,3,7,8-TCDD	3	3	3
Total PeCDD	5	10	5
1,2,3,7,8-PeCDD	2	1[a]	<3
Total HxCDD	11	8	8
1,2,3,4,7,8-HxCDD	1	1[a]	<3
1,2,3,6,7,8-HxCDD	1	1	<2
1,2,3,7,8,9-HxCDD	2	<1	<3
Total HpCDD	8	23	19
1,2,3,4,6,7,8-HpCDD	8[a]	13	8
OCDD	43	60	30
Total TCDF	2790	1780	1480
2,3,7,8-TCDF	460	280	270
Total PeCDF	780	300	430
1,2,3,7,8-PeCDF	75	33	35
2,3,4,7,8-PeCDF	89	30	46
Total HxCDF	130	70	150
1,2,3,4,7,8-HxCDF	35	20	38
1,2,3,6,7,8-HxCDF	13	8	14
2,3,4,6,7,8-HxCDF	16	10	22
1,2,3,7,8,9-HxCDF	1[a]	1	<2
Total HpCDF	5	20	2
1,2,3,4,6,7,8-HpCDF	11[a]	10	22[a]
1,2,3,4,7,8,9-HpCDF	2	3	5[a]
OCDF	13	10	16
2,3,7,8-TCDD equivalents	104	52	62

[a]Estimated maximum possible concentration.

TABLE 4-9. 2,3,7,8-TCDD TOXICITY EQUIVALENT FACTORS (Reference 8)

Compound	Toxicity equivalent factor
2,3,7,8-TCDD	1
Other TCDDs	0
2,3,7,8-PeCDD	0.5
Other PeCDDs	0
2,3,7,8-HxCDD	0.1
Other HxCDDs	0
2,3,7,8-HpCDD	0.01
Other HpCDDs	0
OCDD	0.001
2,3,7,8-TCDF	0.1
Other TCDFs	0
1,2,3,7,8-PeCDF	0.05
2,3,4,7,8-PeCDF	0.5
Other PeCDFs	0
2,3,7,8-HxCDFs	0.1
Other HxCDFs	0
2,3,7,8-HpCDFs	0.01
Other HpCDFs	0
OCDF	0.001

4.3.1 Sample Concentrations

Table 4-10 summarizes the concentrations of the test metals in sediment samples and in each of the incinerator discharge streams (complete analysis results are given in Appendix C). The average concentration of each metal for all eight drums was calculated and is also given in Table 4-10. The calculated average metal concentrations agree very well with the metal concentrations reported in the sample of the combined feed material. This indicates that the procedure used to combine and mix the eight drums created a relatively homogeneous feed material with respect to trace metal content.

TABLE 4-10. TRACE METALS ANALYSIS RESULTS

Sample	Cd	Cr	Cu	Pb
Sediment feed:				
Drum A-1, mg/kg	3.7	149	383	241
Drum A-2, mg/kg	2.0	40	288	163
Drum A-3, mg/kg	7.4	169	346	281
Drum A-4, mg/kg	2.0	46.5	160	163
Drum B-1, mg/kg	5.1	126	242	185
Drum B-2, mg/kg	22.4	242	388	252
Drum B-3, mg/kg	12.1	223	424	266
Drum B-4, mg/kg	9.5	230	353	241
Average, mg/kg	8.0	153	323	224
Composite, mg/kg	7.4	161	308	236
Composite sediment TCLP leachate, mg/L	0.11	0.041	0.066	1.2
Test 1 (3/15/91):				
Kiln ash, mg/kg	9.5	376	608	277
Kiln ash TCLP leachate, mg/L	0.26	0.048	6.3	0.71
Afterburner exit flue gas, µg/dscm	42.3	219	571	1030
Scrubber exit flue gas, µg/dscm	34.9	158	421	903
Scrubber liquor, mg/L	0.14	1.9	4.5	8.8
Test 2 (3/19/91):				
Kiln ash, mg/kg	2.7	434	828	75.6
Kiln ash TCLP leachate, mg/L	0.046	0.030	3.01	0.17
Afterburner exit flue gas, µg/dscm	77.6	136	768	1814
Scrubber exit flue gas, µg/dscm	55.3	73.2	436	1273
Scrubber liquor, mg/L	0.27	1.4	2.6	5.4
Test 3a (3/21/91):				
Kiln ash, mg/kg	2.3	367	785	96
Test 3b (3/21/91):				
Kiln ash, mg/kg	2.0	357	721	62
Kiln ash TCLP leachate, mg/L	0.043	0.03	3.0	0.41
Afterburner exit flue gas, µg/dscm	51.6	126	519	984
Scrubber exit flue gas, µg/dscm	79.0	83.9	750	2020
Scrubber liquor, mg/L	0.73	1.3	3.4	5.6
TCLP regulatory level, mg/L	1.0	5.0	—[a]	5.0

[a]— = Not a TCLP metal.

The concentrations of chromium and copper in resulting kiln ashes were higher than the composite sediment feed sample for all tests, and were higher for cadmium and lead for the low-kiln-temperature test (Test 1). This reflects the weight reduction in going from sediment to kiln ash during incineration. However, the cadmium and lead concentrations in kiln ash were significantly lower in the high-kiln-temperature tests (Tests 2 and 3) when compared to the Test 1 kiln ash concentrations; and were also lower than the corresponding sediment feed concentrations. Flue gas cadmium and lead concentrations, both in the afterburner exit flue gas and the scrubber exit flue gas were generally higher for Tests 2 and 3 than for Test 1 as well. Both these trends are the result of the somewhat volatile behavior of these two metals. The extent of volatilization of these metals was evidently higher in Tests 2 and 3 than in Test 1, giving rise to lower kiln ash, and generally higher flue gas, concentrations of these metals for the higher temperature tests. This behavior is discussed in more detail in Subsection 4.3.2.

Table 4-10 also notes the TCLP regulatory limit for the three TCLP metals determined. Comparing composite feed and kiln ash TCLP leachate and scrubber liquor metal concentrations to the TCLP regulatory levels shows that:

- The composite sediment feed would not be a toxicity characteristic (TC) hazardous waste based on leachable cadmium, chromium, or lead concentrations
- No test kiln ash would be a TC hazardous waste based on leachable cadmium, chromium, or lead concentrations
- The scrubber liquor of each of the three tests would be a TC hazardous waste based on lead concentration, but not on cadmium or chromium concentrations

Because the TCLP test involves producing 20g of leachate per gram of solid leached, the TCLP leachate concentration in mg/L can be used to calculate the fraction of metal in each matrix that is "mobile," or leachable, in the procedure. Table 4-11 shows these fractions

TABLE 4-11. TCLP-LEACHABLE TRACE METAL CONTENTS

	Fraction leachable, %			
Metal	Composite sediment feed	Test 1 kiln ash	Test 2 kiln ash	Test 3b kiln ash
Cadmium	30	54	34	43
Chromium	0.5	0.3	0.1	0.2
Copper	0.4	21	7.3	8.4
Lead	10	5.1	4.4	13

leachable for each metal for the composite sediment feed and kiln ashes. As shown in the table, very low fractions, less than 1 percent, of the copper and lead in the sediment feed leached in the TCLP. However, measurable levels of cadmium and lead were leachable from the feed. The fractions of cadmium, lead, and chromium from samples of resulting kiln ash remained comparable to the fractions leachable from the sediment feed, and did not vary with test condition (i.e., kiln temperature).

In contrast, the fractional leachability of copper was significantly increased in kiln ash samples compared to the sediment feed, with even greater leachability from the low-temperature-test ash than from the high-temperature-test ashes. Evidently the incineration of the sediments "mobilized" the copper in the sediments, with greater mobilization occurring at the low kiln temperature.

4.3.2 Discharge Distributions

Table 4-10 shows measured concentrations of the trace metals in the discharge streams analyzed. These concentrations can be combined with feed soil and discharge stream mass flowrate information to better show how the metals distribute among the discharge streams as a function of incineration condition. These distributions are discussed in the following paragraphs.

Table 4-12 summarizes trace metal distributions among the incinerator discharge streams expressed as fractions (in percent) of the amount of each metal fed to the incinerator for each test. Thus, the values in the table represent the fraction of the metal feed to the kiln accounted for by the noted discharge. The rows labeled "total" represent the total amount of metal feed accounted for by the sum of the discharges analyzed. Thus, these rows represent the degree of mass balance closure achieved for each metal for each test.

Two sets of data are shown in Table 4-12. One set notes metal distributions for kiln ash and afterburner exit flue gas. The "total" row for this set of data represents the degree of mass balance closure achieved around the combustor portion of the RKS. For this portion, the inlet stream is the sediment feed, and the two outlet streams are kiln ash and afterburner exit flue gas.

The second set of data notes metal distributions for kiln ash, scrubber exit flue gas, and scrubber liquor. The "total" row for this set of data represents the degree of mass balance closure achieved around the conventional incineration system portion of the RKS. For this portion, the inlet stream is again the sediment feed; the outlet streams are now the kiln ash, the scrubber exit flue gas, and the scrubber liquor.

The data in Table 4-12 show that mass balance closure around the combustor portion of the RKS (kiln ash and afterburner exit flue gas as discharges) were in the nominal 65 to 75 percent range. For both these metals, the kiln ash fraction predominated. In contrast, mass balance closures for cadmium and lead around the combustor portion of the RKS were poorer, 29 to 54 percent for cadmium, and 22 to 47 percent for lead. For these metals, the kiln ash fractions were lower and measured afterburner fractions significantly higher.

Mass balance closures around the conventional incineration system portion of the RKS (kiln ash, scrubber exit flue gas, and scrubber liquor as discharges) were uniformly better for all

TABLE 4-12. TRACE METAL DISTRIBUTIONS

Test	1 (3/15/91)	2 (3/19/91)	3b (3/21/91)
Kiln exit temperature, °C	**824**	**984**	**985**
(°F)	**(1516)**	**(1803)**	**(1805)**
Kiln exit O_2, %	**11.2**	**9.0**	**10.0**
	Distribution, % of metal fed		
Cadmium			
Kiln ash	38	10	8
Afterburner exit flue gas	16	25	21
Total	54	35	29
Kiln ash	38	10	8
Scrubber exit flue gas	14	22	37
Scrubber liquor	10	20	58
Total	62	52	103
Chromium			
Kiln ash	70	73	65
Afterburner exit flue gas	4	2	2
Total	74	75	67
Kiln ash	70	73	65
Scrubber exit flue gas	3	1	2
Scrubber liquor	6	5	5
Total	79	79	72
Copper			
Kiln ash	59	72	71
Afterburner exit flue gas	5	6	5
Total	64	78	76
Kiln ash	59	72	71
Scrubber exit flue gas	4	4	8
Scrubber liquor	2	5	7
Total	71	81	86
Lead			
Kiln ash	35	9	10
Afterburner exit flue gas	12	18	12
Total	47	27	22
Kiln ash	35	9	10
Scrubber exit flue gas	11	16	30
Scrubber liquor	20	13	14
Total	66	38	54

metals. Kiln ash fractions remained constant. Scrubber exit flue gas fractions were generally comparable to measured afterburner exit flue gas fractions. However, the addition of the scrubber liquor fraction improved the mass balance closures achieved. This observation is consistent with past IRF experience. Despite the fact that the afterburner exit sampling location is acceptable with respect to the ability to perform an isokinetic duct traverse, the IRF experience has been that flue gas metal concentrations measured at this location are generally lower than expected.

Mass balance closures around the conventional incineration system portion of the RKS ranged from 52 to 103 percent for cadmium, 72 to 79 percent for chromium, 71 to 86 percent for copper, and 38 to 66 percent for lead. These levels of mass balance closure are considered excellent when viewed in light of past experience on achieving trace metal mass balance closures from a variety of combustion sources, incinerators included. Typical mass balance closure results from this past experience have been, at best, in the 30 to 200 percent range.

A clearer picture of the variation in relative metal distributions with incinerator operation is possible when the data in Table 4-12 are normalized by the total mass balance closure achieved. Table 4-13 summarizes the test metal distribution data in this form. The distribution fractions in Table 4-13 have been normalized to the total amount of each metal measured in all the discharge streams analyzed. Thus, these normalized values represent fractions that would have resulted had mass balance closure in each case been 100 percent. Note that the sum of the normalized values (the totals) for each metal is indeed 100 percent in Table 4-13. Use of distribution fractions normalized in this manner allow clearer data interpretation, because they remove variable mass balance closure as a source of test-to-test data variability.

Focusing on the conventional incineration system data set in Table 4-13, several interesting observations emerge. The first is that, in these tests, chromium and copper exhibited relatively

TABLE 4-13. NORMALIZED TRACE METAL DISTRIBUTIONS

Test	1 (3/15/91)	2 (3/19/91)	3b (3/21/91)
Kiln exit temperature, °C (°F)	824 (1516)	984 (1803)	985 (1805)
Kiln exit O_2, %	11.2	9.0	10.0
	Distribution, % of metal measured		
Cadmium			
Kiln ash	71	29	29
Afterburner exit flue gas	29	71	71
Total	100	100	100
Kiln ash	61	19	8
Scrubber exit flue gas	23	42	36
Scrubber liquor	16	39	56
Total	100	100	100
Chromium			
Kiln ash	95	97	97
Afterburner exit flue gas	5	3	3
Total	100	100	100
Kiln ash	88	92	92
Scrubber exit flue gas	4	2	2
Scrubber liquor	8	6	6
Total	100	100	100
Copper			
Kiln ash	92	93	93
Afterburner exit flue gas	8	7	7
Total	100	100	100
Kiln ash	83	89	82
Scrubber exit flue gas	6	5	10
Scrubber liquor	11	6	8
Total	100	100	100
Lead			
Kiln ash	75	32	44
Afterburner exit flue gas	25	68	56
Total	100	100	100
Kiln ash	53	23	19
Scrubber exit flue gas	17	42	55
Scrubber liquor	30	35	26
Total	100	100	100

nonvolatile behavior. The kiln ash discharge represented the predominant fraction of metal discharged for these two metals. The kiln ash accounted for 88 to 92 percent of the chromium discharged and 82 to 89 percent of the copper discharged. Further, these distributions were not affected by kiln temperature in the range varied (i.e., 824° to 985°C [1516° to 1805°F]).

In contrast, cadmium and lead exhibited relatively volatile behavior. At the low-kiln-temperature test (Test 1) conditions, the kiln ash accounted for 53 (lead) to 61 (copper) percent of the metals discharged. Even at this relatively low incineration temperature, a significant amount of each metal evidently vaporized in the kiln and was carried into the afterburner and downstream to augment the amount entrained in flyash carried out of the kiln.

The extent of evident vaporization was enhanced at the high-temperature-test (Tests 2 and 3) condition. For these tests, the kiln ash accounted for significantly decreased fractions of cadmium and lead discharged, 8 to 19 percent for cadmium and 19 to 23 percent for lead. Scrubber exit flue gas and scrubber liquor fractions were higher than the kiln ash fractions at this high-temperature condition. Indeed, 36 to 42 percent of the cadmium discharged and 42 to 55 percent of the lead discharged escaped the incineration system and the venturi/packed-column scrubber.

Scrubber collection efficiency for each of the metals measured in the flue gas streams can be calculated from measured concentrations in the afterburner exit flue gas and the scrubber exit flue gas. However, as noted above, metals concentrations measured in the afterburner exit flue gas are suspected to be lower than actually present, based upon this test program as well as past IRF experience. Thus, calculated scrubber collection efficiencies using measured afterburner exit flue gas concentrations would be quite poor. In fact, for Test 3, measured scrubber exit flue gas metals discharge rates were greater than or equal to measured afterburner exit flue gas flowrates.

Thus, calculated scrubber collection efficiencies using measurement data from this test would be 0 to negative.

Based on past experience, a better estimate of the flowrate of metals at the scrubber inlet has been obtained by summing the flows in the two scrubber discharge streams: the scrubber exit flue gas and the scrubber liquor. This allows an apparent scrubber collection efficiency to be calculated as (scrubber liquor fraction)/(scrubber liquor fraction plus scrubber exit flue gas fraction).

Table 4-14 summarizes the apparent scrubber collection efficiencies calculated for each metal measured in the test program. The data in Table 4-14 show that, at the low-kiln-temperature test condition, apparent collection efficiencies for chromium, copper, and lead were comparable, and in the nominal 65 to 70 percent range. Collection efficiency for cadmium was lower at 41 percent. At the high-kiln-temperature test condition, cadmium and chromium efficiencies were relatively unchanged. Copper and lead collection efficiencies were decreased.

4.4 PARTICULATE AND HCl EMISSIONS DATA

Particulate levels at the venturi/packed-column scrubber exit and at the stack were measured by Method 5 trains. Each Method 5 train was fitted with an impinger train to collect HCl to determine HCl emissions. At the afterburner exit, an Anderson cascade impactor collected particle samples and provided particle size distribution information. The results obtained are discussed in the following subsections.

4.4.1 Particulate Load

Table 4-15 gives the particulate levels measured at the scrubber exit and at the stack. For the three tests, flue gas particulate levels at the scrubber exit ranged from 70 to 101 mg/dscm (corrected to 7 percent O_2). The scrubber exit of the IRF RKS is analogous to the stack of a typical commercial incinerator. As noted in Section 2.1, at the IRF the combustion flue gas

TABLE 4-14. APPARENT SCRUBBER COLLECTION EFFICIENCIES

Test	1 (3/15/91)	2 (3/19/91)	3b (3/21/91)
Kiln exit temperature, °C (°F)	824 (1516)	984 (1803)	985 (1805)
Kiln exit O_2, %	11.2	9.0	10.0
	Apparent scrubber collection efficiency, %		
Cadmium	41	48	50
Chromium	69	79	62
Copper	66	53	33
Lead	64	45	23

TABLE 4-15. FLUE GAS PARTICULATE LEVELS

Test	Flue gas particulate, mg/dscm at 7% O_2	
	Scrubber exit	Stack
Test 1 (3/15/91)	70	41
Test 2 (3/19/91)	82	58
Test 3b (3/21/91)	101	52

passes through the secondary APCS downstream of the venturi/packed-column scrubber before being vented to the atmosphere via the stack. At the IRF RKS stack, particulate levels ranged from 41 to 58 mg/dscm (at 7 percent O_2), consistently lower than the scrubber exit particulate levels. The data confirmed that particulate levels in both sample locations were below the 180 mg/dscm (at 7 percent O_2) hazardous waste incinerator performance standard.

4.4.2 HCl Emissions

The sediments incinerated during this test program contained 0.85 percent chlorine. Table 4-16 summarizes the levels of HCl measured at the scrubber exit and at the stack. As a

TABLE 4-16. FLUE GAS HCl LEVELS

Parameter		Test 1 (3/15/91)	Test 2 (3/19/91)	Test 3b (3/21/91)
Cl feedrate, g/hr		591	591	589
Scrubber exit				
Flue gas HCl concentration,				
	mg/dscm	0.31	3.60	1.14
	ppm	0.2	2.4	0.8
Flue gas emission rate, g/hr		0.68	7.24	2.10
System collection efficiency, %		99.9	98.8	99.6
Stack				
Flue gas HCl concentration,				
	mg/dscm	0.24	8.26	1.6
	ppm	0.2	5.5	7.7
Flue gas emission rate, g/hr		0.55	17.9	23.3
System collection efficiency, %		99.9	97.0	96.0

reminder, HCl concentrations were determined by chloride ion-specific electrode analysis of the combined Method 5 impinger solutions. These chloride analyses produce estimates of maximum HCl concentrations by assuming that all measured chlorides exist in the form of HCl.

Measured HCl concentrations at the scrubber exit ranged from 0.2 to 2.4 ppm, with corresponding emission rates ranging from 0.7 to 7.2 g/hr. These emission rates were less than the hazardous waste incinerator performance standard floor of 2 kg/hr. For reasons unexplained, the measured HCl concentrations at the stack for Tests 2 and 3 were higher than those at the scrubber exit. These higher concentration measurements corresponded to emission rates of 17.9 to 23.3 g/hr, respectively, although still well within the performance standard level.

The incinerator system was fairly effective in controlling HCl emissions. The system (combustor and scrubber) produced HCl collection efficiencies that ranged from 98.8 to 99.9 percent of the chlorine fed. Including the secondary APCS, HCl collection efficiency was computed to range from 96.0 to 99.9 percent. Again, these lower values resulted from the

unexplained higher measured HCl concentrations at the stack when compared with those at the scrubber exit. In any event, the data do suggest that a wet scrubber system similar to the venturi/packed-column scrubber used in these tests will likely be able to control HCl emissions to acceptable levels during the incineration of New Bedford Harbor sediments.

4.4.3 Particle Size Distributions

Table 4-17 gives the results of the particle size measurements performed at the afterburner exit. In performing the particle size sampling, it was observed that the cascade impactor sampling nozzle collected noticeable amounts of particulate on its inside wall. This particulate adhered to the probe wall, and could not be recovered and weighed accurately. Thus, it is believed that a significant amount of the flue gas particulate could have been left unaccounted for in the afterburner exit particle sizing measurements. This observation was corroborated by the calculated particulate levels at the afterburner exit, some of which were lower than those measured at the scrubber exit.

TABLE 4-17. AFTERBURNER EXIT PARTICLE SIZE DISTRIBUTIONS

Test	1 (3/15/91)	2 (3/19/91)	3b (3/21/91)
Kiln exit temperature, °C	824	984	985
(°F)	(1516)	(1803)	(1805)
Kiln exit O_2, %	11.2	9.0	10.0
Size, µm	Cumulative % less than size		
11.7	93.6	100	100
9.7	89.5	99.8	98.6
6.6	77.1	96.8	95.5
4.5	62.9	95.9	90.8
2.9	57.7	94.2	88.9
1.4	57.7	94.0	85.7
0.9	57.2	89.3	78.5
0.6	53.4	83.0	72.0

With the above cautionary note, Figure 4-1 presents the data in Table 4-17 graphically by plotting the cumulative mass percent less than particle diameter (y-axis) versus particle diameter (x-axis). Had the size distribution been log-normal in nature, the data would have followed a straight line. The curvature in the data lines indicated that the particles captured in the cascade impactor train were not log-normal distributed.

The data in Figure 4-1 show that the afterburner exit size distributions were comparable for Tests 2 and 3b, which were performed at comparable incineration conditions. The size distribution for the low-temperature test (Test 1) was coarser. Nonetheless, even for Test 1, more than 50 percent of the measured particulate matter at the afterburner exit was smaller than 0.6 μm. For Tests 2 and 3, more than 70 and 80 percent, respectively, of the captured particulate was smaller than 0.6 μm. One explanation of the finer particles in Tests 2 and 3 could be the higher kiln temperature during these two tests, 985°C (1805°F), compared to 824°C (1516°F) during Test 1. This observation is consistent with the expectation that high combustion temperature can favor the formation of fine particles via the vaporization and condensation mechanism.

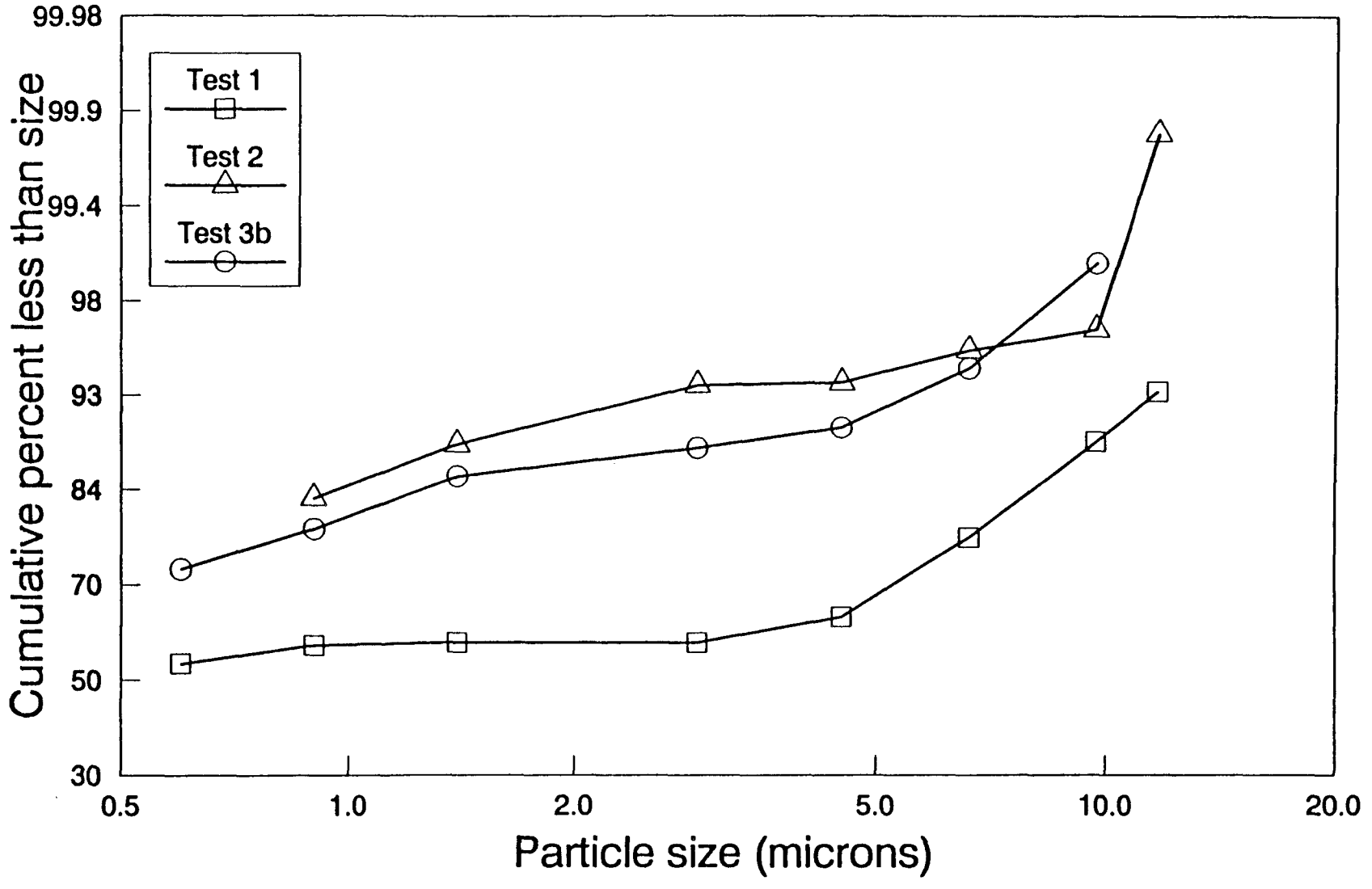

Figure 4-1. Afterburner exit particle size distributions.

SECTION 5

CONCLUSIONS

A detailed test program was performed at the EPA's IRF to evaluate the potential of incineration as an option to treat contaminated marine sediments from the New Bedford Harbor Superfund site near New Bedford, Massachusetts. The sediments at this site are contaminated by PCBs, and by trace metals, chiefly cadmium, chromium, copper, and lead. The purpose of these tests was to evaluate the incinerability of these sediments in terms of the destruction of PCBs, and the fate of the contaminant trace metals, during incineration. The test program was designed to evaluate the effects of incineration operating conditions on the composition of the discharge streams. The specific test objectives addressed the following questions:

- Can incineration effectively destroy PCBs to the required DRE of 99.9999 percent to yield a treated sediment free of PCB contamination?
- What is the distribution of the contaminant trace metals in the discharge streams during incineration of the sediment?
- What are the effects of incineration excess air and temperature on organic constituent destruction and metals distributions, including their leachability from the kiln ash?
- What is the effectiveness of the APCS in collecting particulate and trace metals?
- Can the treated sediment (kiln ash) from the incinerator be disposed of as non-hazardous solid waste?

The test program consisted of a set of four incineration tests in the IRF RKS, equipped with a venturi/packed-column scrubber APCS.

Test conclusions in terms of the above questions are as follows:

- Greater than 99.9999 percent PCB DRE can be achieved at incineration temperatures of both 824°C (1516°F) and 984°C (1803°F) in the rotary kiln with an afterburner operated at 1208°C (2206°F). However, with a kiln solids residence time of 0.5 hr, the treated sediments (kiln ash) are still PCB-contaminated. In tests with a PCB-spiked sediment feed, kiln ash contained 0.3 to 0.8 percent of the spiked feed PCB levels regardless of kiln temperature. For a native (unspiked) sediment feed, kiln ash contained 1 to 3 percent of the feed PCB levels.
- The APCS discharge flue gas from the incineration of the sediments contained low levels of PCDDs and higher levels of PCDFs, chiefly total TCDF, total PeCDF, and total HxCDF. The 2,3,7,8-TCDD toxicity equivalent levels were in the nominal 50 to 100 pg/dscm range. PCDD/PCDF emissions were not affected by kiln temperature.
- Of the contaminant trace metals, chromium and copper were relatively nonvolatile. The kiln ash discharge accounted for nominally 80 to 90 percent of the discharged amounts of these metals. These fractions were not affected by the range of kiln temperatures tested.
- Of the contaminant trace metals, cadmium and lead exhibited relatively volatile behavior, and increasingly so at the high kiln temperature (984°C [1803°F]). The kiln ash discharge accounted for 53 percent of the lead and 61 percent of the cadmium discharged at the low kiln temperature (824°C [1516°F]). These

fractions decreased to the nominal 10 to 20 percent range for cadmium and the 20 percent range for lead, at the high kiln temperature. Scrubber exit flue gas fractions (cadmium and lead) and scrubber liquor fractions (cadmium) increased accordingly.

- Apparently scrubber collection efficiencies were in the nominal 65 to 70 percent range for chromium, copper, and lead at the low kiln temperature, and lower, at 41 percent, for cadmium. Cadmium and chromium collection efficiencies were apparently unaffected by increased kiln temperature, although copper and lead collection efficiency decreased to the 33 to 53 percent range for copper, and the 23 to 45 percent range for lead.
- Treated sediments would not exhibit the toxicity characteristic (TC) based on their cadmium, chromium, or lead concentrations. However, the scrubber liquor discharge stream was a TC hazardous waste based on the lead concentrations found in these tests.
- Incineration had little effect on the fractional leachability of cadmium, chromium, and lead from the treated sediments relative to the untreated sediments. However, incineration "mobilized" the sediment's copper content such that copper was significantly more leachable from kiln ash, especially the kiln ash resulting from low-kiln-temperature incineration. Chromium fractional leachability was insignificant from both untreated sediments and kiln ash.

No conclusions regarding the effects of variations in kiln excess air levels on organic constituent destruction and metals distributions were possible, as little variation in kiln excess air level could be operationally achieved.

The test results suggest that incineration would be an effective treatment option for the site sediments. However, sediment dewatering prior to incineration, or incinerating at higher kiln solids residence times (perhaps up to 1 hr), might be required to yield a treated sediment not contaminated by PCBs. If a wet scrubber were used for particulate and acid gas control, the scrubber blowdown discharge might require further treatment to stabilize leachable lead levels. Flue gas emissions from a wet scrubber APCS might be of concern; thus, a dry scrubber technology could prove to be the approach of choice.

REFERENCES

1. "Record of Decision Summary, New Bedford Harbor/Hot Spot Operable Unit, New Bedford, Massachusetts," U.S. Environmental Protection Agency, Region 1, April 1990.

2. "Test Methods for Evaluating Solid Waste: Physical/Chemical Methods," EPA SW-846, 3rd edition, November 1986.

3. 40 CFR, Part 261, Appendix II.

4. 40 CFR, Part 60, Appendix A.

5. "Proposed Methods for Stack Emissions Measurement for CO, O_2, THC, HCl, and Metals at Hazardous Waste Incinerators," U.S. Environmental Protection Agency, Office of Solid Waste, November 1989.

6. "Stationary Source Test Methods, Volume 1, Methods for Determining Compliance with District Nonvehicular (Stationary Source) Emission Standards," State of California Air Resources Board, Sacramento, California, March 1988.

7. "Methods for Chemical Analysis of Water and Wastes," EPA-600/4-84-017, March 1984.

8. "Interim Procedures for Estimating Risks Associated with Exposures to Mixtures of Chlorinated Dibenzo-p-dioxins and Dibenzofurans (CDDs and CDFs), 1989 Update," EPA-625/3-89-016, March 1989.

APPENDIX A

INCINERATOR OPERATING DATA

APPENDIX A-1

CONTROL ROOM DATA

New Bedford Harbor
Control Room 3-15-91
Waste Feeding (1000 - 1405)

Time	Weight Reading Waste (lbs)	Quench Press. 1,2,3 (psi)	Quench Flow (gpm)	Venturi Liquor Flow (gpm)	Packed Column Liquor Flow (gpm)	Bldwn Water Totalizer (gal)	Make-up Water Totalizer (gal)	Venturi Liquor Flow (gpm)	Packed Column Liquor Flow (gpm)	Kiln Pressure (in w.c.)	AB Pressure (in w.c.)	E-Duct Pressure (in w.c.)	Venturi dp (in w.c.)	Packed Column dp (in w.c.)	Kiln Exit (°F)
950	821.0	50	18	20	30		7183	11	29	0.04	0.18	3.0	27	10.5	1502
1015	766.5	50	18	20	30		7183	11	29	0.03	0.18	4.0	29	11.0	1503
1030	725.0	50	18	20	30		7183	11	29	0.02	0.18	4.0	29	11.0	1513
1045	684.0	50	18	20	30		7183	11	29	0.02	0.11	6.0	31	10.5	1465
1100	643.0	50	18	20	30	903	7183	11	29	0.01	0.10	5.5	27	10.5	1642
1115	601.5	50	18	20	30	904	7183	11	29	0.01	0.12	3.5	23	11.5	1680
1130	561.0	50	18	20	30	920	7183	11	29	0.01	0.13	2.0	25	7.5	1483
1145	519.5	50	18	20	30	925	7183	11	29	0.01	0.13	2.0	25	8.0	1452
1200	478.5	50	18	20	30	925	7183	11	29	0.02	0.14	2.2	24	9.0	1517
1215	437.5	50	18	20	30	925	7183	11	29	0.00	0.12	1.5	24	8.5	1472
1230	396.5	50	18	20	30	925	7183	11	29	0.02	0.14	1.5	24	8.5	1482
1245	341.5	50	18	20	30	925	7183	11	29	0.01	0.12	1.5	24	9.0	1523
1300	300.5	50	18	20	30	926	7183	11	29	0.02	0.14	1.5	24	8.0	1508
1315	260.0	50	18	20	30	937	7183	11	29	0.02	0.16	1.5	25	6.0	1500
1330	218.5	50	18	20	30	938	7183	11	29	0.02	0.16	2.0	24	7.5	1502
1345	177.5	50	18	20	30	938	7183	11	29	0.01	0.40	1.5	24	7.0	1505
1400	136.5	50	18	20	30	938	7183	11	29	0.01	0.14	1.0	24	7.0	1495
1430	137.0	50	18	20	30	938	7183	11	29	0.02	0.16	0.5	24	6.0	1474
1500	137.0	50	18	20	30	938	7183	11	29	0.02	0.16	0.5	24	6.5	1487
1530	137.0	50	18	20	30	938	7183	11	29	0.02	0.12	0.5	24	6.5	1502
MIN:	136.5	50	18	20	30	903	7183	11	29	0.00	0.10	1.0	23	6.0	1452
MAX:	821.0	50	18	20	30	938	7183	11	29	0.04	0.40	6.0	31	11.5	1680
AVG:	474.6	50	18	20	30	925	7183	11	29	0.02	0.16	2.6	25	8.9	1514

New Bedford Harbor
Control Room Cont'd 3-15-91
Waste Feeding (1000 - 1405)

Time	AB Exit (°F)	Quench Exit (°F)	Scrubber Exit (°F)	Stack (°F)	Scrubber Liquor (°F)	Ash (°F)	Liquor pH	Combustion Efficiency SE (%)	Combustion Efficiency ST (%)	AB Gas Flow (scfh)	AB Air Flow (acfh)	AB Exit Temp (°F)	Kiln Gas Flow (scfh)	Kiln Air Flow (acfh)	Kiln Exit Temp (°F)
950	2207	174	115	122	97	152	10.5	99.9900	99.9900	1819	13532	2197	1133	10755	1558
1015	2208	178	116	121	96	153	10.1	99.9900	99.9900	1964	13515	2204	1042	8892	1505
1030	2206	177	116	121	96	152	9.9	99.9900	99.9900	1921	13472	2196	1040	8090	1480
1045	2204	176	110	120	96	152	9.6	99.9900	99.9900	1937	13970	2188	1040	4917	1520
1100	2193	175	109	116	96	149	9.4	99.9900	99.9900	2189	22057	2199	896	4987	1632
1115	2221	177	114	114	96	239	9.3	99.9900	99.9900	2159	21354	2213	896	4983	1644
1130	2195	178	119	117	96	230	9.3	99.9900	99.9900	2279	22086	2191	879	4994	1490
1145	2198	176	117	124	96	191	9.2	99.9900	99.9900	2285	22130	2199	970	4999	1530
1200	2213	179	119	124	97	177		99.9900	99.9900	2290	22146	2205	894	5003	1515
1215	2216	177	116	125	97	187		99.9900	99.9900	2297	22165	2208	894	4996	1462
1230	2207	179	119	124	97	184		99.9900	99.9900	2222	22065	2198	894	5006	1498
1245	2206	177	119	125	97	81	9.1	99.9957	99.9920	2200	22198	2197	894	5009	1497
1300	2213	179	120	125	97	179	9.1	99.9963	99.9921	2279	22174	2203	894	4907	1492
1315	2206	177	119	125	97	142	9.1	99.9965	99.9911	2314	22116	2197	895	5007	1500
1330	2215	178	119	128	98	144	9.1	99.9982	99.9921	2330	22192	2206	894	5007	1511
1345	2198	178	169	126	97	408	9.0	99.9990	99.9920	2302	22074	2190	894	4997	1518
1400	2211	177	118	126	97	450	9.0	99.9970	99.9910	2322	22084	2204	892	5000	1458
1430	2208	176	116	124	97	395	9.1	99.9965	99.9907	2312	22120	2202	1124	5002	1498
1500	2208	176	116	123	97	347	9.1	99.9986	99.9908	2297	22053	2203	1075	4994	1512
1530	2211	176	116	123	97	288	9.1	99.9973	99.9912	2292	22132	2206	1082	4988	1507
MIN:	2193	174	109	114	96	81	9.0	99.9900	99.9900	1819	13472	2188	879	4907	1458
MAX:	2221	179	169	128	98	450	10.5	99.9990	99.9921	2330	22198	2213	1133	10755	1644
AVG:	2207	177	120	123	97	198	9.4	99.9925	99.9906	2183	20078	2200	938	5738	1518

New Bedford Harbor
Control Room 3-19-91
Waste Feeding (0855 - 1300)

Time	Weight Reading Waste (lbs)	Quench Press. 1,2,3 (psi)	Quench Flow (gpm)	Venturi Liquor Flow (gpm)	Packed Column Liquor Flow (gpm)	Bldwn Water Totalizer (gal)	Make-up Water Totalizer (gal)	Venturi Liquor Flow (gpm)	Packed Column Liquor Flow (gpm)	Kiln Pressure (in w.c.)	AB Pressure (in w.c.)	E-Duct Pressure (in w.c.)	Venturi dp (in w.c.)	Packed Column dp (in w.c.)	Kiln Exit (°F)
830	823.0	50	18	20	30	4172	860	11	29	0.03	0.18	1.5	24	7.0	1804
845	823.0	50	18	20	30	4188	887	11	29	0.03	0.10	6.5	25	12.5	1824
900	795.5	50	18	20	30	4188	887	11	29	0.02	0.06	5.5	24	12.5	1757
915	754.0	50	18	20	30	4188	887	11	29	0.02	0.18	5.0	24	12.5	1799
930	713.0	50	18	20	30	4214	887	11	29	0.03	0.24	1.5	25	6.5	1737
945	671.5	50	18	20	30	4230	887	11	29	0.03	0.24	0.5	25	6.5	1845
1000	617.0	50	18	20	30	4230	887	11	29	0.03	0.24	1.0	24	7.0	1803
1015	575.5	50	18	20	30	4230	887	11	29	0.04	0.24	0.5	24	6.5	1794
1030	534.5	50	18	20	30	4230	887	11	29	0.02	0.24	1.5	25	7.0	1814
1045	507.0	50	18	20	30	4230	887	11	29	0.02	0.24	1.0	25	7.0	1789
1100	466.0	50	18	20	30	4233	887	11	29	0.02	0.24	1.0	25	7.0	1801
1115	411.0	50	18	20	30	4239	887	11	29	0.02	0.24	2.5	25	8.0	1800
1130	388.5	50	18	20	30	4239	887	11	29	0.03	0.24	2.5	24	8.0	1819
1145	343.0	50	18	20	30	4239	887	11	29	0.02	0.24	3.0	25	8.5	1772
1200	288.0	50	18	20	30	4239	887	11	29	0.02	0.22	3.5	24	9.0	1770
1215		50	18	20	30	4240	887	11	29	0.02	0.24	3.0	25	8.5	1771
1230	206.0	50	18	20	30	4257	887	11	29	0.02	0.24	2.0	25	7.5	1770
1245	165.0	50	18	20	30	4257	887	11	29	0.02	0.24	2.5	25	8.5	1808
1300	137.5	50	18	20	30	4257	887	11	29	0.02	0.26	2.5	25	7.5	1819
1315	137.5	50	18	20	30	4257	887	11	29	0.02	0.26	2.5	25	7.0	1782
1330		50	18	20	30	4257	887	11	29	0.03	0.26	2.5	25	7.5	1808
1345		50	18	20	30	4257	887	11	29	0.04	0.26	2.5	25	7.5	1802
1400		50	18	20	30	4257	887	11	29	0.03	0.26	2.5	25	7.5	1795
1415		50	18	20	30	4257	887	11	29	0.03	0.36	0.5	25	6.5	178
MIN:	137.5	50	18	20	30	4188	887	11	29	0.02	0.06	0.5	24	6.5	1737
MAX:	795.5	50	18	20	30	4257	887	11	29	0.04	0.26	5.5	25	12.5	1845
AVG:	473.3	50	18	20	30	4232	887	11	29	0.02	0.23	2.3	25	8.1	1792

New Bedford Harbor
Control Room Cont'd 3-19-91
Waste Feeding (0855 - 1300)

Time	AB Exit (°F)	Quench Exit (°F)	Scrubber Exit (°F)	Stack (°F)	Scrubber Liquor (°F)	Ash (°F)	Liquor pH	Combustion Efficiency SE (%)	Combustion Efficiency ST (%)	AB Gas Flow (scfh)	AB Air Flow (acfh)	AB Exit Temp (°F)	Kiln Gas Flow (scfh)	Kiln Air Flow (acfh)	Kiln Exit Temp (°F)
830	2214	175	117	67	95	121	7.3	99.99	99.99	1692	12120	2196	1599	11513	1800
845	2210	173	106	76	94	120	7.4	99.99	99.99	1770	14367	2188	1338	8421	1785
900	2210	175	107	102	95	122	7.4	99.99	99.99	1761	14346	2206	1213	8412	1777
915	2203	176	111	110	96	120	7.4	99.99	99.99	1945	19498	2197	1212	8506	1846
930	2204	177	121	116	97	120	7.4	99.99	99.99	2181	17479	2199	1283	7797	1806
945	2204	177	123	128	97	120	7.3	99.99	99.99	2005	19503	2199	1338	7013	1815
1000	2209	177	123	129	98	120	7.4	99.99	99.99	2063	19519	2200	1261	7028	1812
1015	2211	177	122	128	98	118	7.5	99.99	99.99	2093	19522	2204	1326	7022	1800
1030	2207	179	124	129	97		6.9	99.99	99.99	2081	19548	2203	1326	7036	1814
1045	2204	177	121	129	97		7.4	100.00	99.99	2043	19569	2196	1326	7036	1820
1100	2207	177	121	129	97	118	7.5	99.99	99.99	2021	19546	2196	1326	7043	1812
1115	2213	177	123	130	98	118	7.4	99.99	99.99	2090	19539	2206	1381	7041	1829
1130	2201	177	123	130	98	115	7.4	99.99	99.99	2092	19555	2197	1333	7043	1830
1145	2200	177	122	130	98	113	7.4	99.99	99.99	2115	19543	2203	1333	7041	1841
1200	2204	177	122	130	97	113	7.4	99.99	99.99	2043	19544	2197	1299	7040	1807
1215	2208	177	123	129	97	112	7.4	99.99	99.99	2080	19599	2197	1325	7052	1756
1230	2213	178	124	130	97	107	7.6	100.00	99.99	2098	19581	2206	1389	7052	1809
1245	2203	177	123	131	98	107	7.3	100.00	99.99	2113	19587	2200	1390	7051	1820
1300	2202	177	123	131	98	106	7.4	100.00	99.99	2041	19595	2198	1388	7067	1820
1315	2204	175	121	130	99	103	7.4	100.00	99.99	2141	17579	2200	1494	7053	1791
1330	2202	175	120	129	97	101	7.3	100.00	99.99	2119	19602	2197	1490	7062	1803
1345	2207	175	120	128	98	101	7.4	100.00	99.99	2108	19605	2198	1462	7058	1795
1400	2205	175	120	128	98	101	7.4	100.00	99.99	2153	19603	2203	1532	7062	1803
1415	2040	170	114	127	96	99	7.4	100.00	99.99	816	15564	2019	1892	7006	1804
MIN:	2200	175	107	102	95	106	6.9	99.99	99.99	1761	14346	2196	1212	7013	1756
MAX:	2213	179	124	131	98	122	7.6	100.00	99.99	2181	19599	2206	1390	8506	1846
AVG:	2206	177	121	126	97	115	7.4	99.99	99.99	2051	19122	2200	1321	7252	1813

New Bedford Harbor
Control Room Cont'd 3-21-91A
Waste Feeding (0815 - 1140)

Time	AB Exit (°F)	Quench Exit (°F)	Scrubber Exit (°F)	Stack (°F)	Scrubber Liquor (°F)	Ash (°F)	Liquor pH	Combustion Efficiency SE (%)	Combustion Efficiency ST (%)	AB Gas Flow (scfh)	AB Air Flow (acfh)	AB Exit Temp (°F)	Kiln Gas Flow (scfh)	Kiln Air Flow (acfh)	Kiln Exit Temp (°F)
745	2211	176	120	130	96	99	7.3	100.00	99.45	1788	12417	2200	1701	11307	1800
800	2208	176	121	130	97	98	7.4	99.83	99.60	1836	12410	2201	1731	11318	1804
815	2211	176	120	130	97	100	7.4	99.99	99.99	2034	12360	2217	1702	11314	1844
830	2186	177	121	123	97	98	7.5	99.99	99.99	2177	16043	2195	1384	9642	1726
845	2217	178	121	133	98	99	7.3	99.99	99.99	1889	16052	2186	1381	9639	1801
900	2213	177	120	130	98	99	7.4	99.99	99.99	2001	16061	2207	1380	9621	1796
915	2206	179	120	130	99	100	7.4	99.99	99.99	2004	16043	2200	1381	9617	1756
930	2203	178	120	130	99	98	7.3	99.99	99.99	1973	16061	2209	1581	10476	1821
945	2193	178	119	130	99	99	7.3	99.99	99.99	1944	16800	2187	1558	12096	1836
1000	2201	178	128	133	100	99	7.4	99.99	99.99	2227	18623	2201	1569	13256	1763
1015	2193	178	130	139	100	98	7.4	99.99	99.99	2109	18615	2193	1706	13260	1810
1030	2204	178	132	141	100	96	7.3	99.99	99.99	2150	18633	2194	1622	13287	1800
1045	2204	177	130	142	100	95	7.4	99.99	99.99	2160	18637	2198	1564	13287	1792
1100	2207	178	132	141	100	94	7.2	99.99	99.99	2175	18639	2198	1665	13268	1790
1115	2203	178	131	141	101	94	7.4	99.99	99.99	2214	18666	2201	1705	13310	1823
1130	2204	178	131	142	101	71	7.3	99.99	99.99	2172	18678	2196	1596	13303	1810
1145	2203	178	132	142	101	89	7.2	99.99	99.99	2199	18691	2198	1763	13333	1810
MIN:	2186	176	119	123	97	71	7.2	99.99	99.99	1889	12360	2186	1380	9617	1726
MAX:	2217	179	132	142	101	100	7.5	99.99	99.99	2227	18691	2217	1763	13333	1844
AVG:	2203	178	126	135	99	95	7.3	99.99	99.99	2095	17240	2199	1570	11914	1799

New Bedford Harbor
Control Room 3-21-91A
Waste Feeding (0815 - 1140)

Time	Weight Reading Waste (lbs)	Quench Press. 1,2,3 (psi)	Quench Flow (gpm)	Venturi Liquor Flow (gpm)	Packed Column Liquor Flow (gpm)	Bldwn Water Totalizer (gal)	Make-up Water Totalizer (gal)	Venturi Liquor Flow (gpm)	Packed Column Liquor Flow (gpm)	Kiln Pressure (in w.c.)	AB Pressure (in w.c.)	E-Duct Pressure (in w.c.)	Venturi dp (in w.c.)	Packed Column dp (in w.c.)	Kiln Exit (°F)
745	555.0	50	18	20	30	30070	47295	11	29	0.05	0.42	0.0	25.0	3.2	1806
800	555.0	50	18	20	30	30119	47343	11	29	0.05	0.42	0.0	25.0	3.2	1806
815	542.0	50	18	20	30	30153	47428	11	29	0.03	0.32	9.0	18.0	15.0	1799
830	489.0	50	18	20	30	30192	47449	11	29	0.03	0.40	4.5	27.0	7.0	1731
845	449.5	50	18	20	30	30205	47449	11	29	0.03	0.36	5.5	28.0	8.0	1843
900	423.0	50	18	20	30	30205	47449	11	29	0.03	0.34	6.0	27.0	8.5	1782
915	383.5	50	18	20	30	30205	47449	11	29	0.03	0.32	6.5	27.0	9.5	1791
930	343.5	50	18	20	30	30205	47449	11	29	0.02	0.30	6.5	27.0	9.5	1767
945	291.0	50	18	20	30	30206	47449	11	29	0.03	0.32	6.5	27.0	9.0	1829
1000	251.5	50	18	20	30	30213	47449	11	29	0.03	0.36	2.5	29.0	7.5	1767
1015	225.0	50	18	20	30	30218	47449	11	29	0.04	0.38	0.5	30.0	4.5	1779
1030	172.0	50	18	20	30	30225	47449	11	29	0.03	0.37	0.5	26.0	3.5	1800
1045	132.5	50	18	20	30	30225	47449	11	29	0.03	0.30	0.5	26.0	3.5	1794
1100	93.0	50	18	20	30	30225	47449	11	29	0.03	0.39	0.5	25.0	3.7	1801
1115	66.5	50	18	20	30	30225	47449	11	29	0.03	0.39	0.5	25.0	3.7	1789
1130		50	18	20	30	30225	47449	11	29	0.03	0.36	0.5	25.0	4.0	1795
1145	0.5	50	18	20	30	30225	47446	11	29	0.04	0.40	0.5	24.0	5.5	1786
MIN:	0.5	50	18	20	30	30153	47428	11	29	0.02	0.30	0.5	18.0	3.5	1731
MAX:	542.0	50	18	20	30	30225	47449	11	29	0.04	0.40	9.0	30.0	15.0	1843
AVG:	275.9	50	18	20	30	30210	47447	11	29	0.03	0.35	3.4	26.1	6.8	1790

New Bedford Harbor
Control Room 3-21-91B
Waste Feeding (1240 - 1715)

Time	Weight Reading Waste (lbs)	Quench Press. 1,2,3 (psi)	Quench Flow (gpm)	Venturi Liquor Flow (gpm)	Packed Column Liquor Flow (gpm)	Bldwn Water Totalizer (gal)	Make-up Water Totalizer (gal)	Venturi Liquor Flow (gpm)	Packed Column Liquor Flow (gpm)	Kiln Pressure (in w.c.)	AB Pressure (in w.c.)	E-Duct Pressure (in w.c.)	Venturi dp (in w.c.)	Packed Column dp (in w.c.)	Kiln Exit (°F)
1230	767.5	48	18	20	30	30225	47476	11	29	0.04	0.40	0.5	25.0	3.7	1796
1230	767.5	48	18	20	30	30225	47476	11	29	0.04	0.40	0.5	25.0	3.7	1796
1245	739.5	48	18	20	30	30225	47476	11	29	0.04	0.38	0.5	25.0	4.0	1788
1300	684.5	48	18	20	30	30225	47476	11	29	0.04	0.38	0.5	25.0	3.8	1783
1315	657.5	48	18	20	30	30225	47476	11	29	0.03	0.34	0.0	24.0	3.8	1787
1330	602.5	48	18	20	30	30225	47503	11	29	0.03	0.34	3.5	25.0	7.5	1793
1345	561.0	48	18	20	30	30225	47503	11	29	0.03	0.40	1.0	23.0	5.5	1786
1400	529.0	48	18	20	30	30225	47503	11	29	0.04	0.40	0.5	23.0	5.0	1800
1415	479.0	48	18	20	30	30225	47503	11	29	0.03	0.42	1.5	24.0	5.2	1793
1430	437.5	50	18	20	30	30225	47528	11	29	0.03	0.40	2.0	23.0	6.0	1802
1445	410.0	50	18	20	30	30225	47528	11	29	0.05	0.40	1.0	23.0	5.5	1788
1500	369.0	50	18	20	30	30225	47554	11	29	0.04	0.40	1.5	23.0	5.5	1799
1515	314.5	50	18	20	30	30225	47554	11	29	0.04	0.40	1.5	23.0	5.5	1821
1530	273.5	50	18	20	30	30225	47554	11	29	0.03	0.26	1.0	23.0	5.0	1808
1545	246.5	50	18	20	30	30225	47578	11	29	0.03	0.26	1.5	23.0	6.0	1791
1600	191.5	50	18	20	30	30225	47578	11	29	0.04	0.24	1.5	23.0	5.5	1782
1615	164.0	50	18	20	30	30225	47578	11	29	0.03	0.24	1.5	23.0	5.5	1787
1630	109.5	50	18	20	30	30225	47603	11	29	0.04	0.26	1.5	23.0	6.0	1797
1645	82.5	50	18	20	30	30225	47603	11	29	0.04	0.24	1.0	23.0	5.2	1802
1700	27.5	50	18	20	30	30225	47628	11	29	0.04	0.26	1.5	23.0	5.5	1800
1715	0.5	50	18	20	30	30225	47628	11	29	0.04	0.26	1.0	23.0	5.5	1839
1730	0.0	50	18	20	30	30225	47628	11	29	0.05	0.28	0.5	23.0	5.0	1790
1745	0.0	50	18	20	30	30225	47653	11	28	0.04	0.28	1.5	23.0	6.0	1814
1800	0.0	50	18	20	30	30225	47653	11	28	0.05	0.26	1.5	23.0	5.5	1798
1815	0.0	50	18	20	30	30225	47679	11	28	0.04	0.24	1.5	23.0	6.0	1804
1845	0.0	50	18	20	30	30225	47679	11	28	0.04	0.26	1.5	23.0	5.0	1803
2000	0.0	50	18	20	30	30225	47430	11	28	0.04	0.26	1.5	23.0	5.0	1797
MIN:	0.5	48	18	20	30	30225	47476	11	29	0.03	0.24	0.0	23.0	3.7	1782
MAX:	767.5	50	18	20	30	30225	47628	11	29	0.05	0.42	3.5	25.0	7.5	1839
AVG:	382.4	49	18	20	30	30225	47542	11	29	0.04	0.33	1.2	23.5	5.3	1797

New Bedford Harbor
Control Room Cont'd 3-21-91B
Waste Feeding (1240 - 1715)

Time	AB Exit (°F)	Quench Exit (°F)	Scrubber Exit (°F)	Stack (°F)	Scrubber Liquor (°F)	Ash (°F)	Liquor pH	Combustion Efficiency SE (%)	Combustion Efficiency ST (%)	AB Gas Flow (scfh)	AB Air Flow (acfh)	AB Exit Temp (°F)	Kiln Gas Flow (scfh)	Kiln Air Flow (acfh)	Kiln Exit Temp (°F)
1230	2204	176	129	138	100	80	7.4	99.99	99.98	2233	18717	2197	1769	14086	1799
1230	2204	176	129	138	100	80	7.4	99.99	99.98	2233	18717	2197	1769	14086	1799
1245	2196	177	130	139	100	82	7.9	99.99	99.98	2280	19504	2189	1567	14101	1809
1300	2205	178	131	142	101	76	7.5	99.99	99.98	2277	19572	2199	1579	14124	1802
1315	2196	178	133	143	101	71	7.7	99.99	99.98	2571	21471	2199	1566	14132	1798
1330	2199	178	133	143	101	67	7.6	99.99	99.98	2496	22233	2201	1412	15260	1822
1345	2200	178	137	146	102	65	7.9	99.99	99.98	2471	22623	2185	1162	15200	1783
1400	2206	179	140	148	102	60	7.7	99.99	99.99	2603	22594	2201	1616	15171	1792
1415	2210	178	139	149	102	57	7.6	99.99	99.98	2501	22599	2197	1615	15206	1811
1430	2202	179	141	149	102	98	6.4	99.99	99.98	2594	22605	2204	1612	15187	1811
1445	2208	177	139	149	102	98	7.3	99.99	99.98	2527	22572	2199	1610	15190	1804
1500	2205	178	140	148	103		7.3	99.99	99.98	2603	22596	2201	1610	15228	1806
1515	2209	179	141	148	102	122	8.9	99.99	99.98	2512	22529	2199	1608	15176	1824
1530	2209	178	141	150	103	120	7.5	99.99	99.98	2535	22540	2199	1608	15213	1819
1545	2208	179	139	149	102	120	7.8	99.99	99.98	2582	22531	2202	1604	15154	1811
1600	2204	178	140	144	103	119	7.6	99.99	99.99	2522	22500	2195	1602	15171	1807
1615	2211	179	141	150	103	119	7.8	99.99	99.98	2570	22476	2202	1602	15154	1809
1630	2201	178	139	148	102	117	7.6	99.99	99.98	2559	22461	2203	1603	15102	1825
1645	2203	178	140	149	103	178	7.6	99.99	99.98	2191	22487	2196	1602	15124	1822
1700	2204	179	142	150	103	118	7.5	99.99	99.99	2480	22506	2201	1603	15147	1826
1715	2211	180	141	148	103	114	7.9	99.99	99.99	2427	22518	2200	1605	15124	1819
1730	2202	178	139	148	103	113	7.4	99.99	99.98	2529	22472	2200	1605	15138	1791
1745	2207	178	136	145	101	115	7.4	99.99	99.98	2549	22467	2198	1656	15105	1795
1800	2206	178	137	146	102	114	7.4	99.99	99.98	2559	22530	2199	1661	15134	1795
1815	2209	178	136	146	101	115	7.3	99.99	99.98	2537	22515	2200	1694	15119	1805
1845	2207	178	139	147	102	114	7.4	99.99	99.98	2560	22407	2201	1656	15069	1797
2000	2210	178	138	146	102	114	7.4	99.99	99.98	2536	22416	2200	1643	15087	1802
MIN:	2196	176	129	138	100	57	6.4	99.99	99.98	2191	18717	2185	1162	14086	1783
MAX:	2211	180	142	150	103	178	8.9	99.99	99.99	2603	22623	2204	1769	15260	1826
AVG:	2205	178	138	147	102	99	7.6	99.99	99.98	2477	21982	2198	1578	14963	1810

APPENDIX A-2

GAS TRAIN DATA

New Bedford Harbor
Gas Train 3-15-91
Waste Feeding (1000 - 1408)

Time	Air Plenum (in w.c.)	Blow Off Air (in w.c.)	Air Static (in w.c.)	Total Air Flow (in w.c.)	Air Temp (°F)	Kiln Air Flow (in w.c.)	Kiln Sec Air Flow (in w.c.)	Gas Pres Static (psi)	Gas Press Dynamic (in w.c.)	Kiln Gas Temp (°F)	AB Air Flow (in w.c.)	AB Sec Air Flow (in w.c.)
1000	46.0	0.5	43.0	1.2	89	3.3	0.0	2.5	0.40		4.0	0.0
1030	46.0	0.5	43.0	1.0	89	2.4	0.0	2.5	0.40		4.1	0.0
1100	46.0	0.5	43.0	1.3	89	1.6	0.0	2.5	0.35		6.4	0.0
1130	46.0	0.5	43.0	1.3	89	1.6	0.0	2.5	0.35		6.6	0.0
1200	46.0	0.5	43.0	1.3	89	1.6	0.0	2.6	0.35		6.6	0.0
1230	46.0	0.5	43.0	1.3	89	1.6	0.0	2.6	0.35		6.6	0.0
1300	46.0	0.5	43.0	1.3	90	1.6	0.0	2.6	0.35	64	6.6	0.0
1330	46.0	0.5	43.0	1.3	90	1.6	0.0	2.6	0.35	64	6.6	0.0
1400	46.0	0.0	43.0	1.3	90	1.6	0.0	2.6	0.35	64	6.6	0.0
1430	46.0	0.0	43.0	1.3	89	1.6	0.0	2.6	0.45	64	6.6	0.0
1500	46.0	0.0	43.0	1.3	89	1.6	0.0	2.6	0.40	64	6.6	0.0
1530	46.0	0.0	43.0	1.3	89	1.6	0.0	2.6	0.40	64	6.6	0.0
MIN:	46.0	0.5	43.0	1.0	89	1.6	0.0	2.5	0.35	64	4.0	0.0
MAX:	46.0	0.5	43.0	1.3	90	3.3	0.0	2.6	0.40	64	6.6	0.0
AVG:	46.0	0.5	43.0	1.3	89	1.9	0.0	2.6	0.36	64	5.9	0.0

New Bedford Harbor
Gas Train Cont'd 3-15-91
Waste Feeding (1000 - 1408)

Time	Gas Press Static (psi)	Gas Press Dynamic (in w.c.)	AB Gas Temp (°F)	Kiln Pilot Air (in w.c.)	Kiln Atom Air (in w.c.)	Gas Press Static (in w.c.)	Gas Press Dynamic (in w.c.)	AB Pilot Air (in w.c.)	AB Atom Air (in w.c.)	Gas Press Static (in w.c.)	Gas Press Dynamic (in w.c.)
1000	3.0	0.95		0.10	4.5	0.5	0.05	0.2	5.0	8.5	0.3
1030	3.0	0.95		0.10	4.5	0.5	0.05	0.2	5.0	8.5	0.3
1100	2.9	0.05		0.10	4.5	0.5	0.05	0.2	5.0	8.5	0.3
1130	2.9	1.15		0.20	4.5	0.5	0.05	0.2	5.0	8.5	0.3
1200	2.9	1.15		0.20	4.5	0.5	0.05	0.2	5.0	8.5	0.3
1230	2.9	1.15		0.20	4.5	0.5	0.05	0.2	5.0	8.5	0.3
1300	2.9	1.15	64	0.20	4.5	0.5	0.05	0.2	5.0	8.5	0.3
1330	2.9	1.15	64	0.20	4.5	0.5	0.05	0.2	5.0	8.5	0.3
1400	2.9	1.15	64	0.02	4.5	0.5	0.05	0.2	5.0	8.5	0.3
1430	2.9	1.15	64	0.02	4.5	0.5	0.05	0.2	5.0	8.5	0.3
1500	2.9	1.15	64	0.02	4.5	0.5	0.05	0.2	5.0	8.5	0.3
1530	2.9	1.20	64	0.02	4.5	0.5	0.05	0.2	5.0	8.5	0.3
MIN:	2.9	0.05	64	0.10	4.5	0.5	0.05	0.2	5.0	8.5	0.3
MAX:	3.0	1.15	64	0.20	4.5	0.5	0.05	0.2	5.0	8.5	0.3
AVG:	2.9	0.96	64	0.16	4.5	0.5	0.05	0.2	5.0	8.5	0.3

New Bedford Harbor
Gas Train 3-19-91
Waste Feeding (0855 - 1300)

Time	Air Plenum (in w.c.)	Blow Off Air (in w.c.)	Air Static (in w.c.)	Total Air Flow (in w.c.)	Air Temp (°F)	Kiln Air Flow (in w.c.)	Kiln Sec Air Flow (in w.c.)	Gas Pres Static (psi)	Gas Press Dynamic (in w.c.)	Kiln Gas Temp (°F)	AB Air Flow (in w.c.)	AB Sec Air Flow (in w.c.)
830	44.0	0.5	41.0	1.0	94	3.1	0.0	2.5	0.65	64	3.7	0.0
900	45.0	0.5	41.0	1.1	94	2.6	0.0	2.5	0.50	64	3.7	0.0
930	45.0	0.5	42.0	1.3	94	2.2	0.0	2.5	0.55	64	5.9	0.0
1000	44.0	0.5	42.0	1.2	94	2.2	0.0	2.5	0.55	64	5.9	0.0
1030	44.0	0.5	42.0	1.2	96	2.2	0.0	2.5	0.55	68	5.9	0.0
1100	44.0	0.5	42.0	1.2	96	2.2	0.0	2.5	0.55	70	5.9	0.0
1130	44.0	0.5	42.0	1.2	96	2.2	0.0	2.5	0.55	70	5.9	0.0
1200	44.0	0.5	42.0	1.2	96	2.2	0.0	2.5	0.55	72	5.9	0.0
1230	44.0	0.5	42.0	1.2	100	2.2	0.0	2.5	0.60	72	5.9	0.0
1300	44.0	0.5	42.0	1.2	100	2.2	0.0	2.5	0.60	74	5.9	0.0
1330	44.0	0.5	42.0	1.2	100	2.2	0.0	2.5	0.65	74	5.9	0.0
1400	44.0	0.5	42.0	1.2	100	2.2	0.0	2.5	0.65	74	5.9	0.0
MIN:	44.0	0.5	41.0	1.1	94	2.2	0.0	2.5	0.50	64.0	3.7	0.0
MAX:	45.0	0.5	42.0	1.3	100	2.6	0.0	2.5	0.60	74.0	5.9	0.0
AVG:	44.2	0.5	41.9	1.2	96	2.2	0.0	2.5	0.56	68.7	5.7	0.0

New Bedford Harbor
Gas Train Cont'd 3-19-91
Waste Feeding (0855 - 1300)

Time	Gas Press Static (psi)	Gas Press Dynamic (in w.c.)	AB Gas Temp (°F)	Kiln Pilot Air (in w.c.)	Kiln Atom Air (in w.c.)	Gas Press Static (in w.c.)	Gas Press Dynamic (in w.c.)	AB Pilot Air (in w.c.)	AB Atom Air (in w.c.)	Gas Press Static (in w.c.)	Gas Press Dynamic (in w.c.)
830	3.0	0.80	64	0.2	5.0	0.5	0.05	0.2	4.5	8.5	0.3
900	3.0	0.80	64	0.2	5.0	0.5	0.05	0.2	4.5	8.5	0.3
930	3.0	1.05	64	0.2	5.0	0.5	0.05	0.2	4.5	8.5	0.3
1000	2.9	1.00	64	0.2	5.0	0.5	0.05	0.2	4.5	8.5	0.3
1030	2.9	1.00	68	0.2	5.0	0.5	0.05	0.2	4.5	8.5	0.3
1100	3.0	1.00	70	0.2	5.0	0.5	0.05	0.2	4.5	8.5	0.3
1130	3.0	1.00	70	0.2	5.0	0.5	0.05	0.2	4.5	8.5	0.3
1200	3.0	1.00	72	0.2	5.0	0.5	0.05	0.2	4.5	8.5	0.3
1230	3.0	1.00	72	0.2	5.0	0.5	0.05	0.2	4.5	8.5	0.3
1300	2.9	1.00	74	0.2	5.0	0.5	0.05	0.2	4.5	8.5	0.3
1330	2.9	1.03	74	0.2	5.0	0.5	0.05	0.2	4.5	8.5	0.3
1400	2.9	1.00	74	0.2	5.0	0.5	0.05	0.2	4.5	8.5	0.3
MIN:	2.9	0.80	64	0.2	5.0	0.5	0.05	0.2	4.5	8.5	0.3
MAX:	3.0	1.05	74	0.2	5.0	0.5	0.05	0.2	4.5	8.5	0.3
AVG:	3.0	0.98	69	0.2	5.0	0.5	0.05	0.2	4.5	8.5	0.3

New Bedford Harbor
Gas Train 3-21-91A
Waste Feeding (0815 - 1140)

Time	Air Plenum (in w.c.)	Blow Off Air (in w.c.)	Air Static (in w.c.)	Total Air Flow (in w.c.)	Air Temp (°F)	Kiln Air Flow (in w.c.)	Kiln Sec Air Flow (in w.c.)	Gas Pres Static (psi)	Gas Press Dynamic (in w.c.)	Kiln Gas Temp (°F)	AB Air Flow (in w.c.)	AB Sec Air Flow (in w.c.)
745	44.0	0.5	42.0	1.2	100	3.4	0.0	2.5	0.75	72	3.9	0.0
815	44.0	0.5	42.0	1.2	100	3.4	0.0	2.5	0.60	72	3.9	0.0
845	44.0	0.5	42.0	1.2	100	3.0	0.0	2.5	0.65	74	3.9	0.0
915	44.0	0.5	42.0	1.2	100	3.0	0.0	2.5	0.65	74	4.9	0.0
945	44.0	0.5	42.0	1.6	100	4.0	0.0	2.5	0.65	74	5.4	0.0
1015	44.0	0.5	42.0	1.6	100	4.0	0.0	2.5	0.75	74	5.6	0.0
1045	44.0	0.5	42.0	1.6	100	4.0	0.0	2.5	0.75	76	5.8	0.0
1115	44.0	0.5	42.0	1.6	100	4.0	0.0	2.5	0.75		5.8	0.0
1145	44.0	0.5	42.0	1.6	106	4.2	0.0	2.5	0.70	78	5.8	0.0
1215	44.0	0.5	42.0	1.6	106	4.2	0.0	2.5	0.75	80	5.8	0.0
MIN:	44.0	0.5	42.0	1.2	100	3.0	0.0	2.5	0.60	72	3.9	0.0
MAX:	44.0	0.5	42.0	1.6	106	4.2	0.0	2.5	0.75	78	5.8	0.0
AVG:	44.0	0.5	42.0	1.5	101	3.7	0.0	2.5	0.69	75	5.1	0.0

New Bedford Harbor
Gas Train Cont'd 3-21-91A
Waste Feeding (0815 - 1140)

Time	Gas Press Static (psi)	Gas Press Dynamic (in w.c.)	AB Gas Temp (°F)	Kiln Pilot Air (in w.c.)	Kiln Atom Air (in w.c.)	Gas Press Static (in w.c.)	Gas Press Dynamic (in w.c.)	AB Pilot Air (in w.c.)	AB Atom Air (in w.c.)	Gas Press Static (in w.c.)	Gas Press Dynamic (in w.c.)
745	3.0	0.85	72	0.2	5.0	0.5	0.05	0.2	4.5	8.5	0.3
815	3.0	0.85	72	0.2	5.0	0.5	0.05	0.2	4.5	8.5	0.3
845	3.0	0.85	74	0.2	5.0	0.5	0.05	0.2	4.5	8.5	0.3
915	3.0	0.95	74	0.2	5.0	0.5	0.05	0.2	4.5	8.5	0.3
945	3.0	1.00	74	0.2	5.0	0.5	0.05	0.2	4.5	8.5	0.3
1015	3.0	1.05	74	0.2	5.0	0.5	0.05	0.2	4.5	8.5	0.3
1045	3.0	1.05	76	0.2	5.0	0.5	0.05	0.2	4.5	8.5	0.3
1115	3.0	1.05		0.2	5.0	0.5	0.05	0.2	4.5	8.5	0.3
1145	3.0	1.05	78	0.2	5.0	0.5	0.05	0.2	4.5	8.5	0.3
1215	3.0	1.10	80	0.2	5.0	0.5	0.05	0.7	4.5	8.5	0.3
MIN:	3.0	0.85	72	0.2	5.0	0.5	0.05	0.2	4.5	8.5	0.3
MAX:	3.0	1.05	78	0.2	5.0	0.5	0.05	0.2	4.5	8.5	0.3
AVG:	3.0	0.98	75	0.2	5.0	0.5	0.05	0.2	4.5	8.5	0.3

New Bedford Harbor
Gas Train 3-21-91B
Waste Feeding (1240 - 1715)

Time	Air Plenum (in w.c.)	Blow Off Air (in w.c.)	Air Static (in w.c.)	Total Air Flow (in w.c.)	Air Temp (°F)	Kiln Air Flow (in w.c.)	Kiln Sec Air Flow (in w.c.)	Gas Pres Static (psi)	Gas Press Dynamic (in w.c.)	Kiln Gas Temp (°F)	AB Air Flow (in w.c.)	AB Sec Air Flow (in w.c.)
1245	44.0	0.5	42.0	3.8	110	4.2	0.0	2.5	0.70	82	6.0	0.0
1315	44.0	0.5	42.0	2.2	110	4.4	0.0	2.5	0.65	82	6.8	0.0
1345	44.0	0.5	42.0	2.2	110	4.6	0.0	2.5	0.75	82	6.8	0.0
1415	44.0	0.5	42.0	2.2	110	4.6	0.0	2.5	0.75	82	6.8	0.0
1445	44.0	0.5	42.0	2.2	110	4.6	0.0	2.5	0.75	82	6.8	0.0
1515	44.0	0.5	42.0	2.2	110	4.6	0.0	2.5	0.75	82	6.8	0.0
1545	44.0	0.5	42.0	2.2	106	4.6	0.0	2.5	0.75	82	6.8	0.0
1615	44.0	0.5	42.0	2.2	104	4.6	0.0	2.5	0.75	80	6.8	0.0
1645	44.0	0.5	42.0	2.2	104	4.6	0.0	2.5	0.75	78	6.8	0.0
1715	44.0	0.5	42.0	2.2	104	4.6	0.0	2.5	0.75	78	6.8	0.0
1745	44.0	0.5	42.0	2.2	102	4.6	0.0	2.5	0.75	78	6.8	0.0
1815	44.0	0.5	42.0	2.2	102	4.6	0.0	2.5	0.75	78	6.8	0.0
1845	44.0	0.5	42.0	2.2	102	4.6	0.0	2.5	0.75	78	6.8	0.0
1915	44.0	0.5	42.0	2.2	102	4.6	0.0	2.5	0.75	78	6.8	0.0
1945	44.0	0.5	42.0	2.2	102	4.6	0.0	2.5	0.75	78	6.8	0.0
2015	44.0	0.5	42.0	2.2	102	4.6	0.0	2.5	0.75	78	6.8	0.0
2045	44.0	0.1	40.0	2.0	102	4.6	0.0	2.6	0.20	78	6.8	0.0
MIN:	44.0	0.5	42.0	2.2	104	4.2	0.0	2.5	0.65	78	6.0	0.0
MAX:	44.0	0.5	42.0	3.8	110	4.6	0.0	2.5	0.75	82	6.8	0.0
AVG:	44.0	0.5	42.0	2.4	108	4.5	0.0	2.5	0.74	81	6.7	0.0

New Bedford Harbor
Gas Train Cont'd 3-21-91B
Waste Feeding (1240 - 1715)

Time	Gas Press Static (psi)	Gas Press Dynamic (in w.c.)	AB Gas Temp (°F)	Kiln Pilot Air (in w.c.)	Kiln Atom Air (in w.c.)	Gas Press Static (in w.c.)	Gas Press Dynamic (in w.c.)	AB Pilot Air (in w.c.)	AB Atom Air (in w.c.)	Gas Press Static (in w.c.)	Gas Press Dynamic (in w.c.)
1245	3.0	1.15	80	0.2	5.0	0.5	0.05	0.2	4.5	8.5	0.3
1315	2.8	1.20	82	0.2	6.0	0.5	0.05	0.2	6.0	8.5	0.3
1345	2.8	1.25	82	0.2	6.0	0.5	0.05	0.2	6.0	8.5	0.3
1415	2.8	1.25	82	0.2	6.0	0.5	0.05	0.2	6.0	8.5	0.3
1445	2.8	1.25	82	0.2	6.0	0.5	0.05	0.2	6.0	8.5	0.3
1515	2.8	1.25	82	0.2	6.0	0.5	0.05	0.2	6.0	8.5	0.3
1545	2.8	1.25	82	0.2	6.0	0.5	0.05	0.2	6.0	8.5	0.3
1615	2.8	1.25	80	0.2	6.0	0.5	0.05	0.2	6.0	8.5	0.3
1645	2.8	1.25	78	0.2	6.0	0.5	0.05	0.2	6.5	8.5	0.3
1715	2.8	1.25	78	0.2	6.0	0.5	0.05	0.2	6.0	8.5	0.3
1745	2.8	1.25	78	0.2	6.0	0.5	0.05	0.2	6.0	8.5	0.3
1815	2.8	1.25	78	0.2	6.0	0.5	0.05	0.2	6.0	8.5	0.3
1845	2.8	1.25	78	0.2	6.0	0.5	0.05	0.2	6.0	8.5	0.3
1915	2.8	1.25	78	0.2	6.0	0.5	0.05	0.2	6.0	8.5	0.3
1945	2.8	1.25	78	0.2	6.0	0.5	0.05	0.2	6.0	8.5	0.3
2015	2.8	1.25	78	0.2	6.0	0.5	0.05	0.2	6.0	8.5	0.3
2045	3.1	0.50	78	0.5	6.0	0.5	0.05	0.2	6.0	8.5	0.3
MIN:	2.8	1.15	78	0.2	5.0	0.5	0.05	0.2	4.5	8.5	0.3
MAX:	3.0	1.25	82	0.2	6.0	0.5	0.05	0.2	6.5	8.5	0.3
AVG:	2.8	1.24	81	0.2	5.9	0.5	0.05	0.2	5.9	8.5	0.3

APPENDIX A-3

AIR POLLUTION CONTROL SYSTEM DATA

New Bedford Harbor
Bay Area 3-15-91
Waste Feeding (1000 - 1405)

Time	2nd HEPA (in w.c.)	Demister (in w.c.)	Carbon Bed Exit (in w.c.)	1st HEPA (in w.c.)
1000	0.0	0.5	15.0	13.5
1030	0.5	0.5	15.0	13.5
1100	1.0	0.5	16.0	14.5
1130	1.0	0.5	15.0	13.5
1200	1.0	0.5	15.5	14.0
1230	1.5	0.5	14.5	13.5
1300	1.5	0.5	14.5	13.5
1330	1.5	0.5	14.0	12.5
1400	2.0	0.5	14.0	12.5
1430	1.5	0.5	14.0	12.5
1500	1.5	0.5	14.0	12.5
1530	1.5	0.5	14.0	12.5
MIN:	0.0	0.5	14.0	12.5
MAX:	2.0	0.5	16.0	14.5
AVG:	1.1	0.5	14.8	13.4

New Bedford Harbor
Bay Area 3-19-91
Waste Feeding (0855 - 1300)

Time	2nd HEPA (in w.c.)	Demister (in w.c.)	Carbon Bed Exit (in w.c.)	1st HEPA (in w.c.)
830	2.5	0.5	23.0	15.0
900	2.3	0.5	22.0	15.0
930	0.5	0.5	14.5	13.0
1000	0.5	0.5	14.0	12.5
1030	0.5	0.5	14.0	12.5
1100	0.5	0.5	14.0	12.5
1130	1.0	0.5	13.5	12.0
1200	2.0	0.5	13.5	12.0
1230	2.0	0.5	13.0	11.5
1300	2.5	0.5	13.0	11.8
1330	2.5	0.5	13.5	12.0
1400	3.0	0.5	13.5	12.0
MIN:	0.5	0.5	13.0	11.5
MAX:	2.5	0.5	22.0	15.0
AVG:	1.3	0.5	14.6	12.5

New Bedford Harbor
Bay Area 3-21-91A
Waste Feeding (0815 - 1140)

Time	2nd HEPA (in w.c.)	Demister (in w.c.)	Carbon Bed Exit (in w.c.)	1st HEPA (in w.c.)
745	1.5	0.5	12.5	11.0
815	2.5	0.5	15.0	14.0
845	2.0	0.5	13.5	12.0
915	2.0	0.5	14.0	12.5
945	2.5	0.5	14.0	12.5
1015	3.0	0.5	11.0	9.5
1045	2.0	0.5	10.5	9.0
1115	2.5	0.5	10.5	9.0
1145	2.5	0.5	10.5	8.5
MIN:	2.0	0.5	10.5	8.5
MAX:	3.0	0.5	15.0	14.0
AVG:	2.4	0.5	12.4	10.9

New Bedford Harbor
Bay Area 3-21-91B
Waste Feeding (1240 - 1715)

Time	2nd HEPA (in w.c.)	Demister (in w.c.)	Carbon Bed Exit (in w.c.)	1st HEPA (in w.c.)
1245	3.5	0.5	11.0	9.2
1315	4.0	0.5	10.5	
1345	3.0	0.5	7.5	6.0
1415	3.0	0.5	7.0	5.5
1445	3.0	0.5	7.0	5.5
1515	3.0	0.5	7.0	5.5
1545	3.0	0.5	7.0	5.0
1615	3.0	0.5	7.0	5.0
1645	3.0	0.5	7.0	4.9
1715	3.0	0.5	7.0	5.0
1745	3.0	0.5	7.0	5.0
1815	3.0	0.5	7.0	4.0
1845	3.0	0.5	7.0	4.0
1915	3.0	0.5	7.0	4.0
1945	3.0	0.5	7.0	3.5
2015	2.5	0.5	5.5	3.5
2045	2.0	0.1	6.0	3.5
MIN:	3.0	0.5	7.0	4.9
MAX:	4.0	0.5	11.0	9.2
AVG:	3.2	0.5	7.8	5.7

APPENDIX A-4

CONTINUOUS EMISSION MONITOR DATA

New Bedford Harbor
CEM Data 3-15-91
Waste Feeding (1000 - 1405)

Time	Kiln O2 (%)	AB O2 (%)	SE O2 (%)	SE CO (ppm)	SE CO2 (%)	SE UTHC (ppm)	SE NOx (ppm)	Stack O2 (%)	Stack CO (ppm)	Stack CO2 (%)
950	10.1	4.2	8.8	4.0	8.9	2.0	0.5	10.0	4.4	5.5
1015	13.2	7.2	9.0	4.0	7.1	2.0	1.0	11.4	4.2	5.2
1030	13.2	7.4	8.9	2.0	7.1	2.0	93.3	11.5	4.3	5.1
1045	11.6	6.3	8.1	4.0	7.7	2.2	91.5	10.9	4.3	5.6
1100	7.8	5.2	8.6	4.0	7.6	2.2	82.5	11.3	4.2	5.5
1115	7.8	4.5	7.1	4.0	8.4	2.7	92.3	10.3	4.7	6.2
1130	12.4	7.1	8.7	3.5	7.6	2.2	83.3	11.2	4.6	5.6
1145	12.1	6.9	8.6	3.0	7.7	2.2	87.5	10.9	4.5	5.7
1200	9.9	5.7	7.7	3.0	8.2	2.4	94.3	10.3	4.9	6.1
1215	12.3	6.9	8.6	4.5	7.8	2.4	86.3	10.9	4.9	5.7
1230	11.6	6.6	8.3	3.5	8.1	2.1	88.0	10.7	5.0	5.9
1245	10.0	5.9	8.0	3.0	8.6		94.3	10.4	4.9	5.9
1300	11.4	6.8	8.5	3.5	7.9		92.3	10.6	5.0	5.8
1315	9.7	6.2	7.3	1.0	8.2		102.8	10.2	5.2	6.4
1330	10.7	5.9	7.6	2.0	8.6		94.3	10.2	4.8	6.2
1345	11.4	7.1	8.5	2.5	7.6	2.1	90.8	10.8	4.8	5.6
1400	11.3	6.6	8.2	2.5	8.0	2.2	88.8	10.6	5.0	6.0
1430	12.4	7.1	9.0	2.0	7.4	2.3	68.5	11.0	5.0	5.4
1500	12.5	7.3	8.8	1.0	7.4	2.1	70.8	11.1	4.9	5.4
1530	12.6	7.3	8.8	2.0	7.4	2.3	72.5	11.0	4.9	5.4
MIN:	7.8	4.2	7.1	1.0	7.1	2.0	0.5	10.0	4.2	5.1
MAX:	13.2	7.4	9.0	4.5	8.9	2.7	102.8	11.5	5.2	6.4
AVG:	11.0	6.3	8.3	3.2	7.9	2.2	80.2	10.7	4.7	5.8

New Bedford Harbor
CEM Data 3-19-91
Waste Feeding (0855 - 1300)

Time	Kiln O2 (%)	AB O2 (%)	SE O2 (%)	SE CO (ppm)	SE CO2 (%)	SE UTHC (ppm)	SE NOx (ppm)	Stack O2 (%)	Stack CO (ppm)	Stack CO2 (%)
830	13.6	7.9	9.4	0.5	7.2	1.1	93.0	11.5	3.3	5.3
845	10.3	6.9	8.8	1.0	7.2	1.5	94.0	11.7	3.3	5.2
900	10.4	5.3	8.2	1.5	8.6	1.5	86.5	11.1	3.3	5.6
915	10.1	5.8	7.9	1.5	8.0	1.5	87.5	10.7	3.0	5.7
930	10.8	6.7	8.5	0.0	7.6	0.9	85.3	10.6	3.3	5.8
945	9.2	6.5	8.2	1.5	7.8	1.3	87.8	10.2	3.3	6.0
1000	9.2	6.4	7.9	1.0	7.9	1.5	92.8	10.2	3.5	6.1
1015	9.7	6.3	7.7	2.0	7.9	1.4	88.5	9.9	3.6	6.2
1030	7.9	5.6	7.3	1.5	8.4	1.3	87.0	9.2	3.7	6.4
1045	9.3	6.5	8.1	1.0	7.7	1.3	90.8	10.3	3.4	5.9
1100	8.0	5.9	7.5	1.5	7.9	0.9	83.5	9.5	3.5	6.3
1115	9.7	6.3	8.1	1.0	7.7	1.4	89.0	10.0	3.9	6.0
1130	9.4	6.4	8.3	1.0	7.7	1.3	89.5	10.2	4.1	6.0
1145	10.6	6.4	8.7	1.0	7.5	1.4	89.8	10.6	3.7	5.8
1200	9.1	6.5	8.1	1.5	7.6	1.3	91.3	10.1	3.9	6.0
1215	10.4	6.6	8.4	0.0	8.4	1.3	93.5	10.3	4.3	6.0
1230	8.8	5.8	7.5	0.5	8.8	1.3	83.8	9.4	4.2	6.7
1245	9.2	6.4	8.3	1.5	8.1	1.3	77.3	10.3	4.1	6.4
1300	9.2	6.7	8.3	1.0	8.8	1.5	81.8	10.2	4.3	5.9
1315	10.8	7.2	8.9	1.0	7.3	1.2	81.0	10.6	4.0	5.6
1330	10.4	7.4	9.1	1.0	7.1	1.4	80.5	10.7	4.1	5.5
1345	10.6	7.2	8.9	1.0	7.1	1.3	82.8	10.7	4.0	5.5
1400	10.6	7.2	9.0	1.0	7.1	1.4	84.3	10.7	4.1	5.5
1415	12.8	11.6	13.1	1.5	4.9	1.4	56.3	13.6	3.8	3.7
MIN:	7.9	5.3	7.3	0.0	7.5	0.9	77.3	9.2	3.0	5.6
MAX:	10.8	6.7	8.7	2.0	8.8	1.5	93.5	11.1	4.3	6.7
AVG:	9.5	6.2	8.1	1.1	8.0	1.3	87.4	10.2	3.7	6.0

New Bedford Harbor
CEM Data 3-21-91A
Waste Feeding (0815 - 1140)

Time	Kiln O2 (%)	AB O2 (%)	SE O2 (%)	SE CO (ppm)	SE CO2 (%)	SE UTHC (ppm)	SE NOx (ppm)	Stack O2 (%)	Stack CO (ppm)	Stack CO2 (%)
745	12.0	20.7	21.0	1.0	0.0	1.3	2.3	15.5	4.3	0.1
800	20.5	20.5	20.2	1.0	0.0	0.6	2.5	19.6	4.8	0.1
815	11.7	7.5	8.9	3.0	7.1	1.0	103.8	10.3	5.1	5.7
830	10.6	7.4	8.7	3.0	7.0	0.9	88.3	10.8	4.7	5.5
845	8.0	5.4	7.0	3.5	8.1	1.0	96.3	9.4	4.0	6.2
900	9.6	6.2	7.9	3.0	7.9	0.9	99.5	9.9	5.1	6.1
915	9.1	6.1	7.8	2.5	7.9	0.9	101.0	9.7	5.2	6.1
930	8.7	5.6	7.4	3.0	8.3	1.3	97.3	9.6	5.3	6.3
945	8.4	6.0	7.9	3.5	7.8	0.9	93.3	10.0	5.2	5.9
1000	9.9	6.4	7.8	3.0	8.3	1.0	89.3	9.5	5.3	6.5
1015	10.3	7.3	8.6	4.0	7.7	1.6	93.3	10.1	5.7	6.3
1030	9.3	6.5	7.9	3.5	7.8	1.0	94.8	9.3	6.0	6.3
1045	10.5	7.3	8.3	3.5	7.4	1.3	87.3	9.7	5.8	6.0
1100	10.6	6.5	8.6	3.0	7.5	1.0	99.3	9.9	5.8	6.0
1115	10.0	7.0	8.2	3.5	7.6	1.2	95.0	9.6	5.6	6.2
1130	10.1	7.3	8.4	3.5	7.5	1.3	91.5	9.7	5.3	6.1
1145	10.3	7.3	8.3	2.5	7.7	1.3	94.0	9.9	6.0	6.1
1200	10.9	7.5	8.7	4.5	7.2	1.0	82.3	10.0	6.0	5.7
1215	11.3	7.9	9.0	4.0	6.7	1.0	81.0	10.2	6.0	5.6
1230	11.3	8.1	9.1	3.0	6.9	1.3	80.8	10.3	6.0	5.5
MIN:	8.0	5.4	7.0	2.5	7.0	0.9	87.3	9.3	4.0	5.5
MAX:	11.7	7.5	8.9	4.0	8.3	1.6	103.8	10.8	6.0	6.5
AVG:	9.8	6.7	8.1	3.2	7.7	1.1	94.9	9.8	5.3	6.1

New Bedford Harbor
CEM Data 3-21-91B
Waste Feeding (1240 - 1715)

Time	Kiln O2 (%)	AB O2 (%)	SE O2 (%)	SE CO (ppm)	SE CO2 (%)	SE UTHC (ppm)	SE NOx (ppm)	Stack O2 (%)	Stack CO (ppm)	Stack CO2 (%)
1230	11.3	8.1	9.1	3.0	6.9	1.3	80.8	10.3	6.0	5.5
1245	11.4	8.0	9.0	3.0	6.9	1.1	84.3	10.4	5.7	5.4
1300	10.8	7.5	8.7	2.5	7.3	1.2	91.3	10.0	6.1	5.8
1315	10.9	7.0	8.2	3.5	7.5	1.5	90.0	9.5	6.3	6.2
1330	10.3	6.9	8.4	4.0	9.8	1.7	94.3	9.7	6.4	6.1
1345	10.6	7.6	8.9	3.0	7.1	1.6	86.8	9.8	6.4	6.0
1400	9.4	6.4	8.0	3.0	7.7	1.5	96.5	9.0	6.3	6.5
1415	10.4	7.2	8.6	3.0	7.3	1.4	96.8	9.4	6.3	6.2
1430	8.8	6.3	7.6	3.0	7.4	1.3	101.0	8.9	6.6	6.5
1445	17.6	7.1	8.3	3.5	8.3	1.4	84.0	9.3	6.7	6.5
1500	10.1	6.7	7.9	1.5	7.8	1.3	91.8	8.9	6.7	6.8
1515	9.0	6.8	8.0	3.0	7.4	1.0	93.0	8.7	6.7	6.1
1530	9.9	7.2	8.6	1.0	7.3	1.5	91.0	8.9	7.0	6.4
1545	10.1	6.9	8.2	1.5	7.4	1.5	90.8	9.3	6.3	6.2
1600	10.6	7.4	8.8	2.5	7.2	1.8	78.3	9.6	6.5	6.1
1615	10.2	7.2	8.4	3.0	7.2	1.7	80.8	9.3	6.5	6.1
1630	10.1	7.2	8.6	2.0	7.2	2.2	82.8	9.5	6.7	6.1
1645	10.1	7.3	8.4	2.5	7.2	1.8	85.5	9.5	6.8	6.1
1700	10.4	7.3	8.6	3.0	7.3	1.8	84.8	9.5	6.5	6.2
1715	8.9	6.4	7.2	2.5	8.3	1.5	78.3	8.4	7.1	7.1
1730	11.6	7.9	9.0	2.0	6.9	1.7	65.5	9.8	6.7	5.9
1745	11.7	8.0	9.2	5.0	6.8	1.8	65.0	10.0	7.3	5.7
1800	11.9	8.2	9.3	5.0	6.8	1.4	65.8	9.9	7.5	5.7
1815	11.9	8.1	9.2	1.5	6.7	1.3	67.3	9.9	7.2	5.7
MIN:	8.8	6.3	7.2	1.0	6.9	1.0	78.3	8.4	5.7	5.4
MAX:	17.6	8.1	9.1	4.0	9.8	2.2	101.0	10.4	7.1	7.1
AVG:	10.5	7.1	8.4	2.7	7.5	1.5	88.1	9.4	6.5	6.2

APPENDIX B

OPERATING DATA PLOTS

APPENDIX B-1

KILN AND AFTERBURNER OPERATION

TEST 1 (3/15/91)

OPERATIONS, EVENTS AND SAMPLING

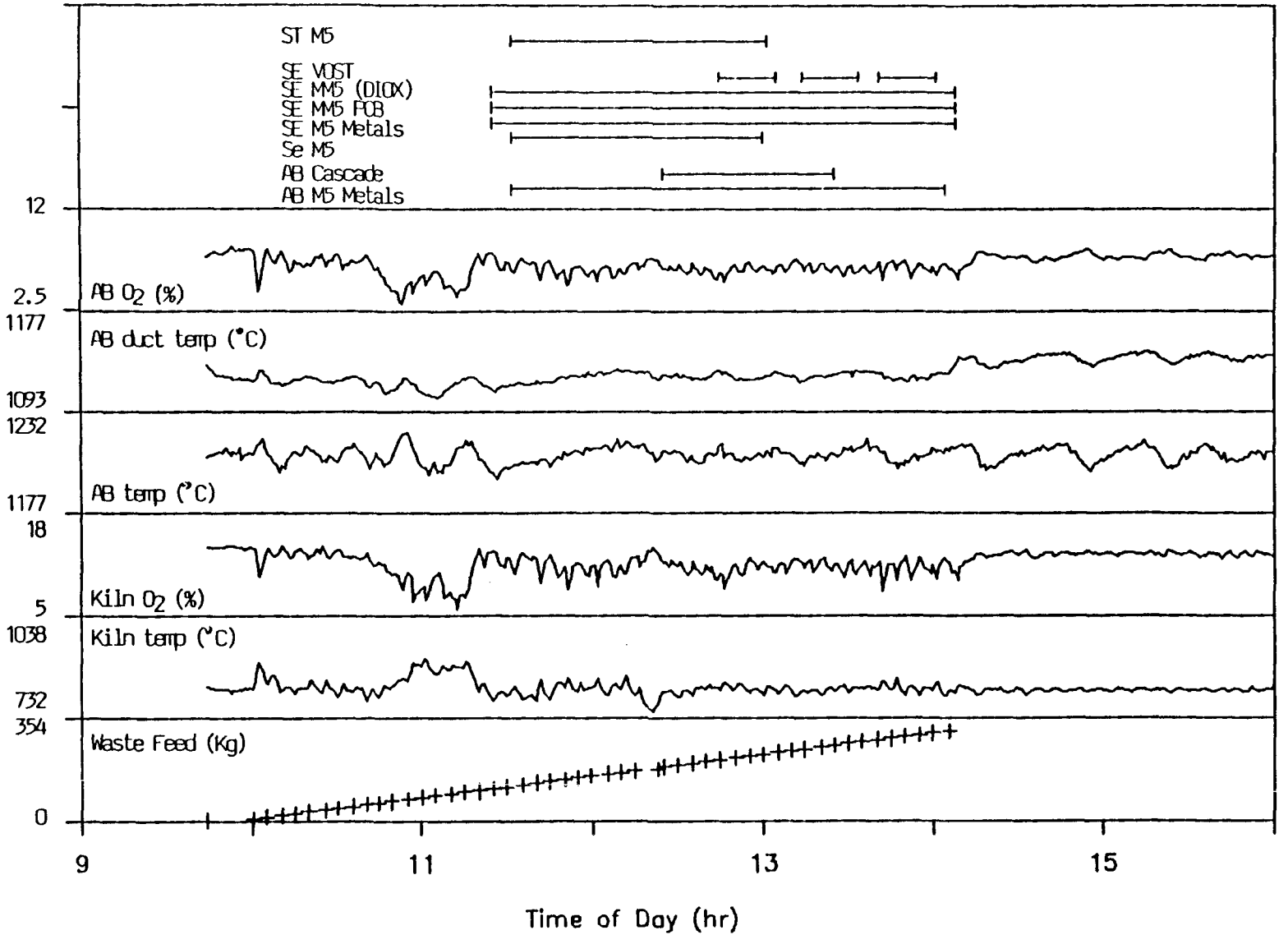

TEST 2 (3/19/91)

OPERATIONS, EVENTS AND SAMPLING

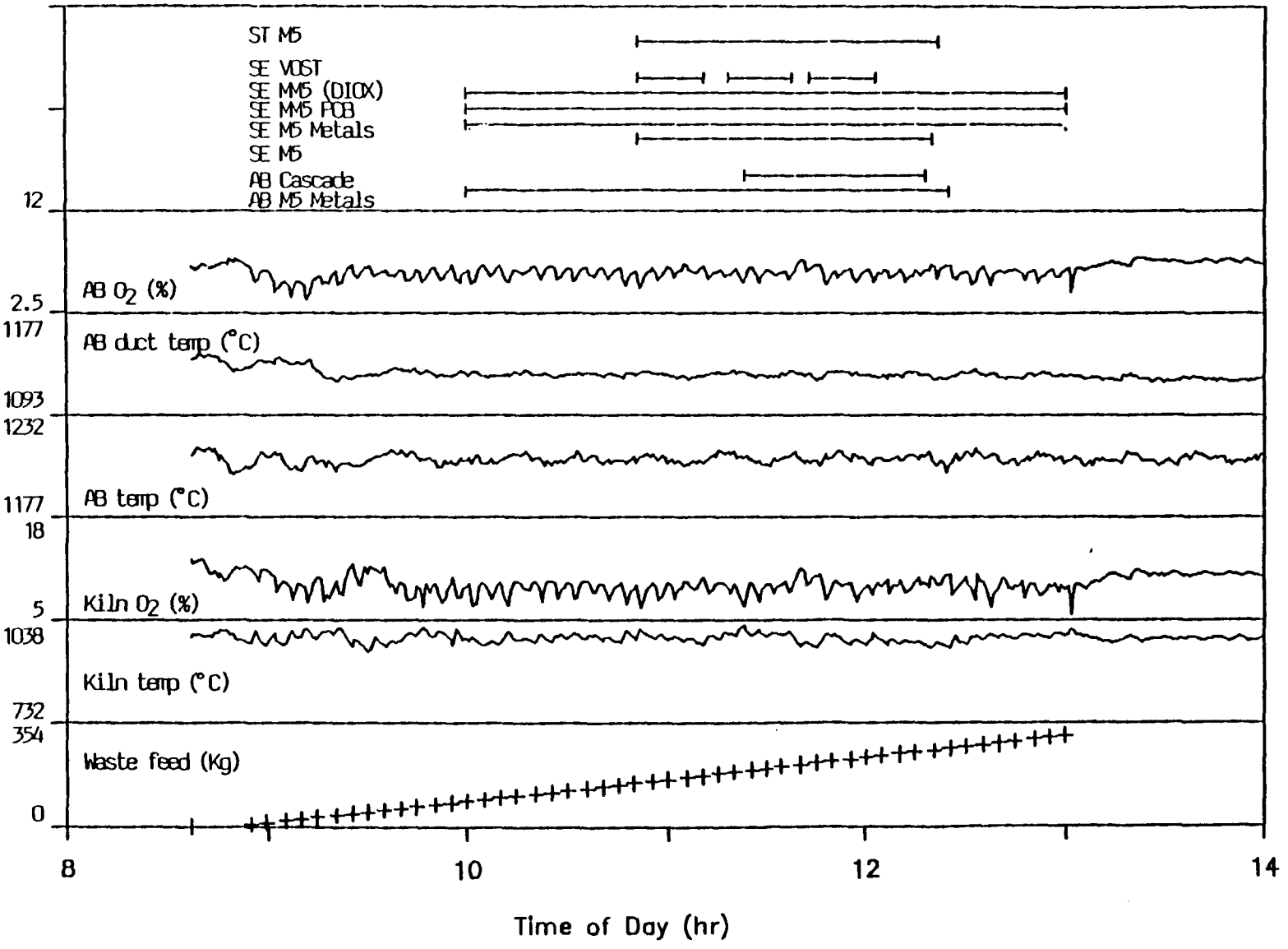

TEST 3a (3/21/91)

OPERATIONS,EVENTS AND SAMPLING

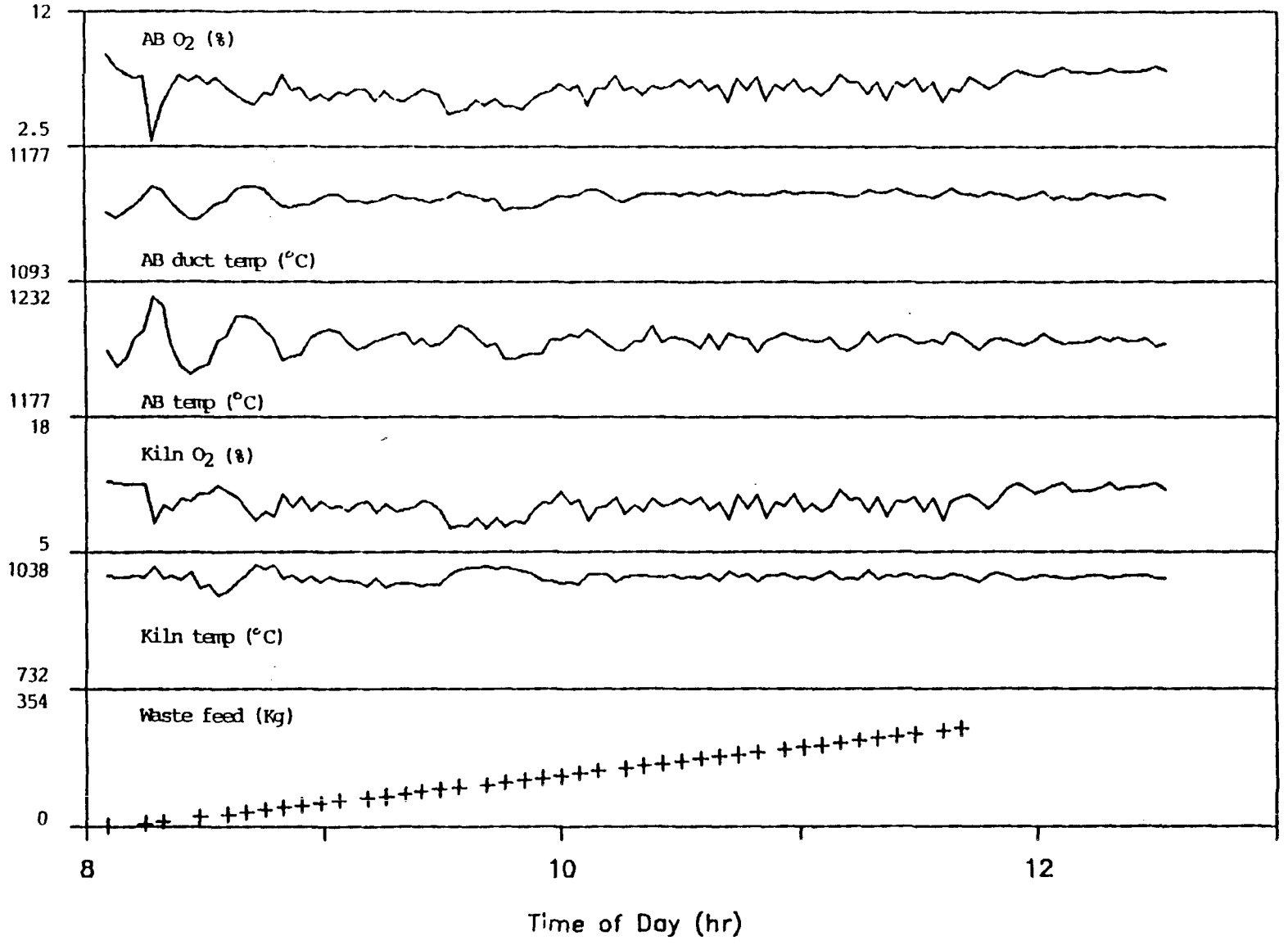

TEST 3b (3/21/91)

OPERATIONS,EVENTS AND SAMPLING

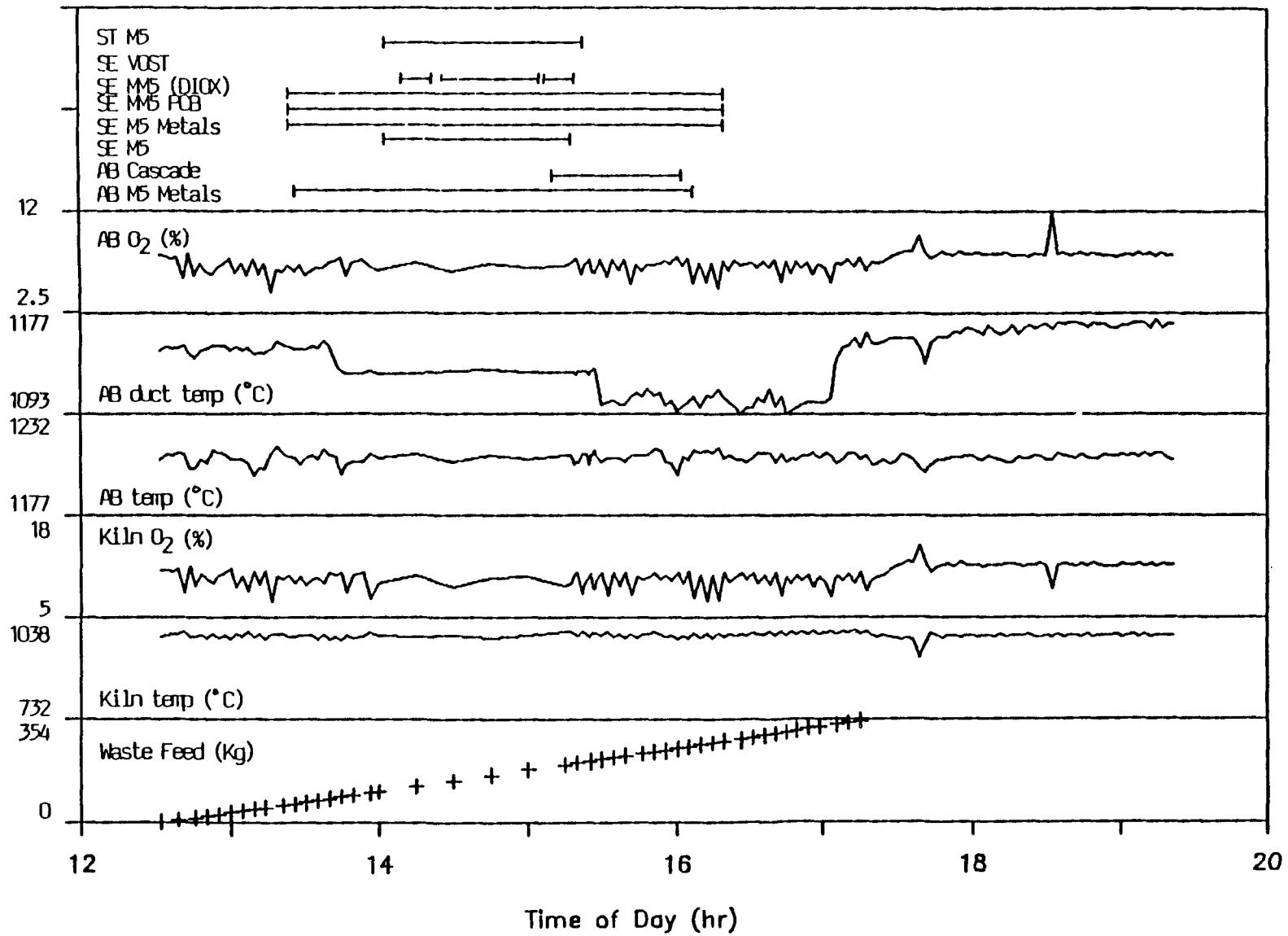

APPENDIX B-2

SCRUBBER EXIT AND STACK CONTINUOUS EMISSION MONITORS

TEST 1 (3/15/91)

SCRUBBER EXIT CEM's

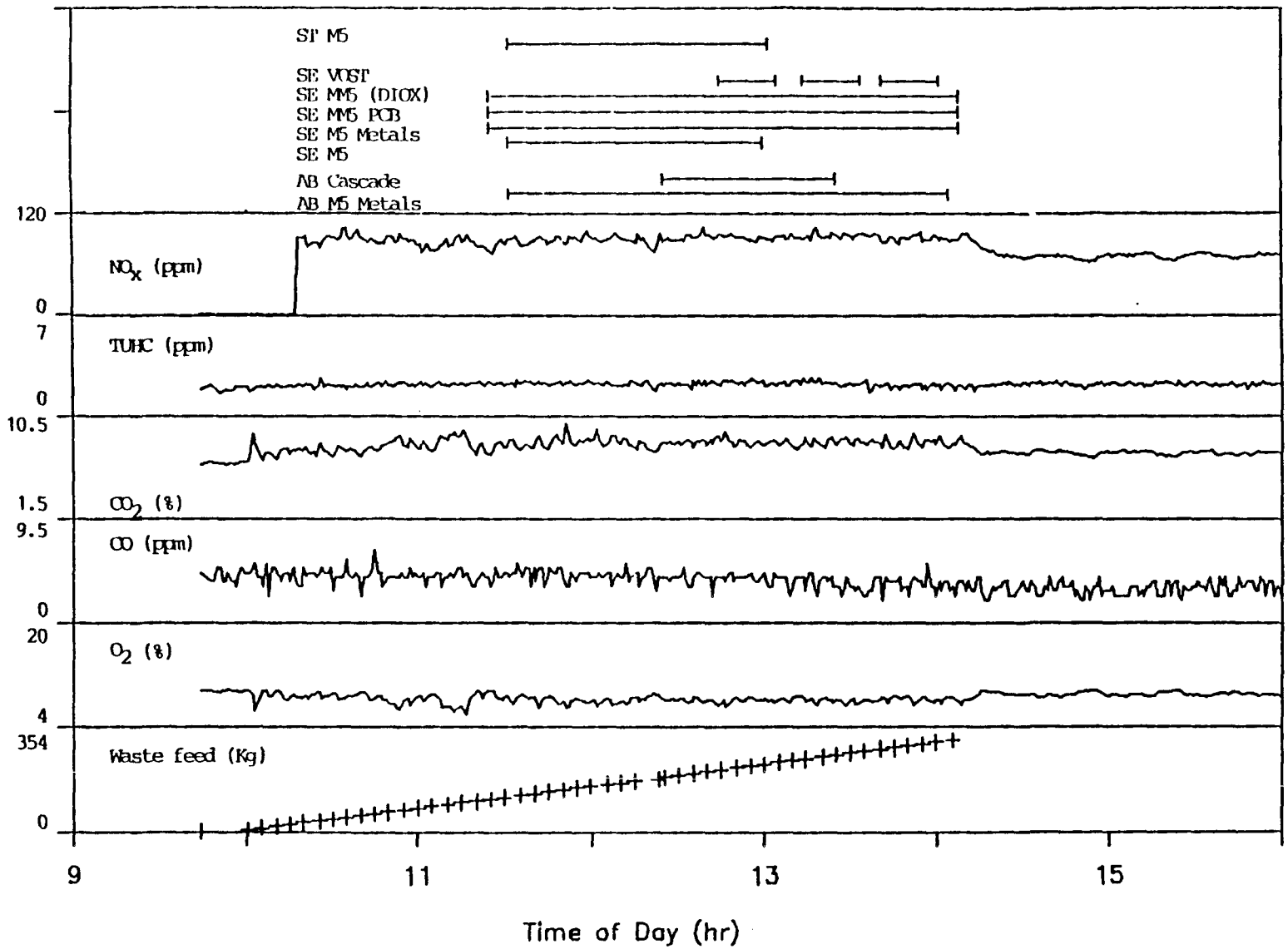

TEST 2 (3/19/91)

SCRUBBER EXIT CEM's

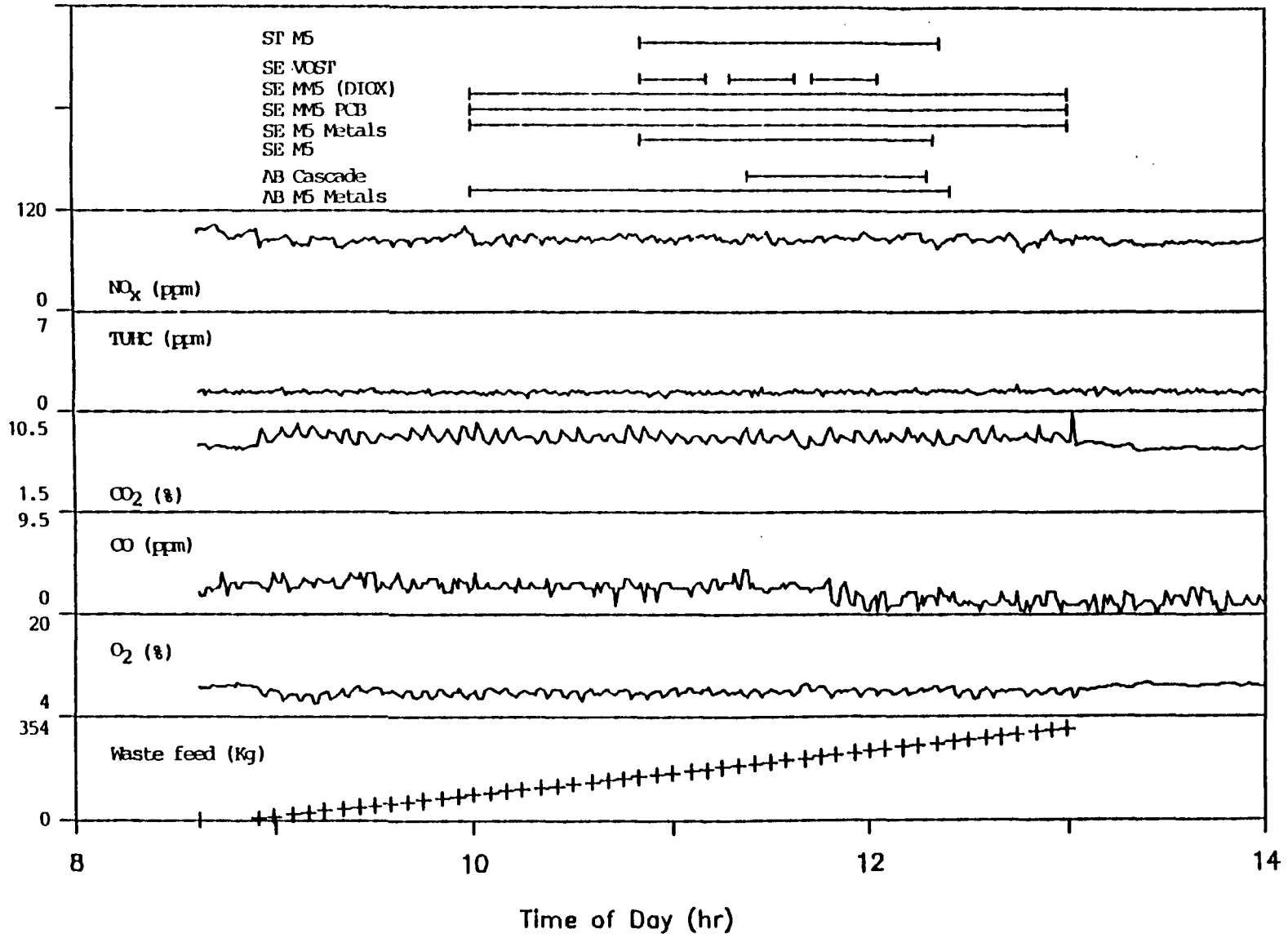

TEST 3a (3/21/91)

SCRUBBER EXIT CEM's

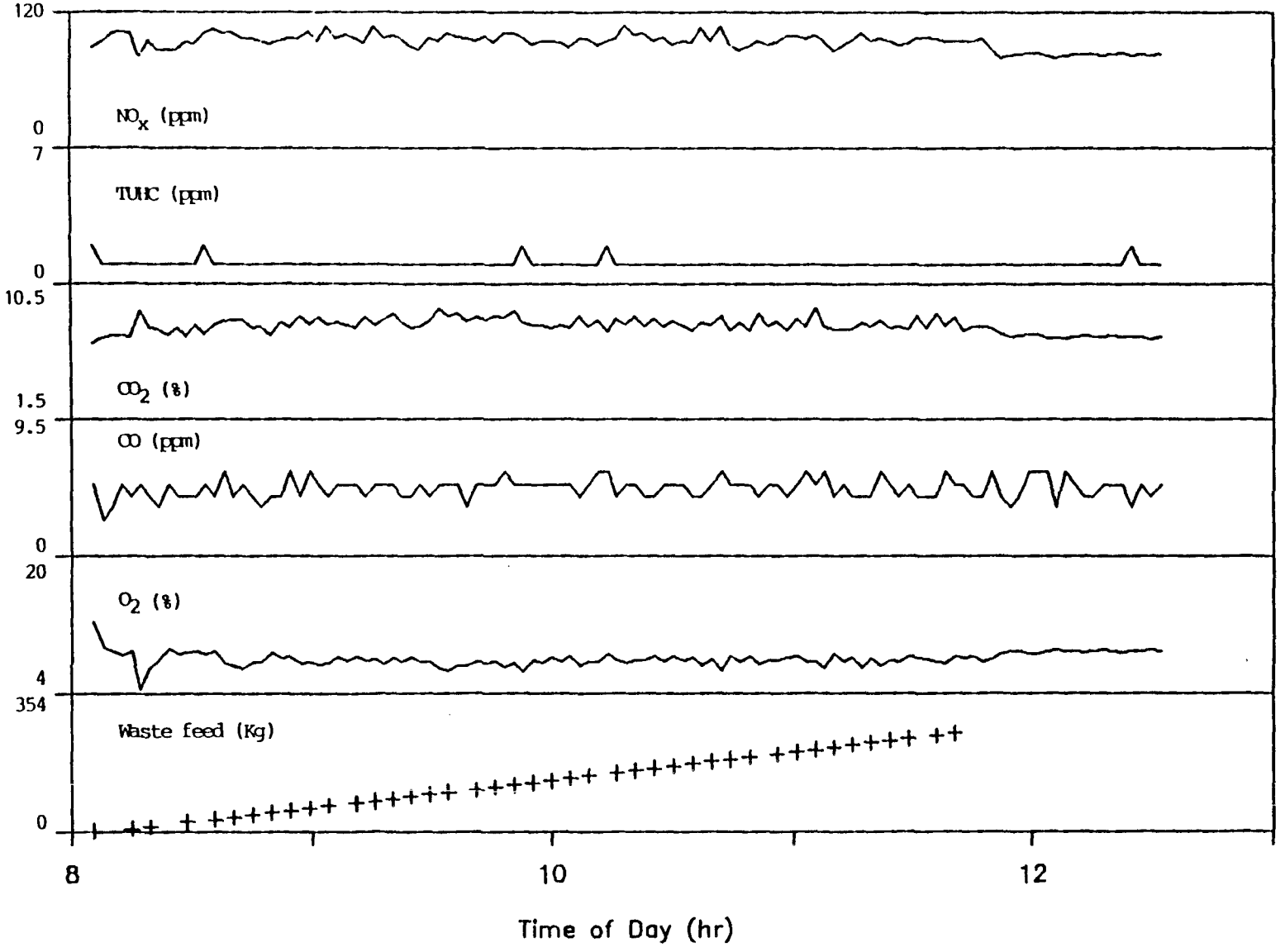

TEST 3b (3/21/91)

SCRUBBER EXIT CEM's

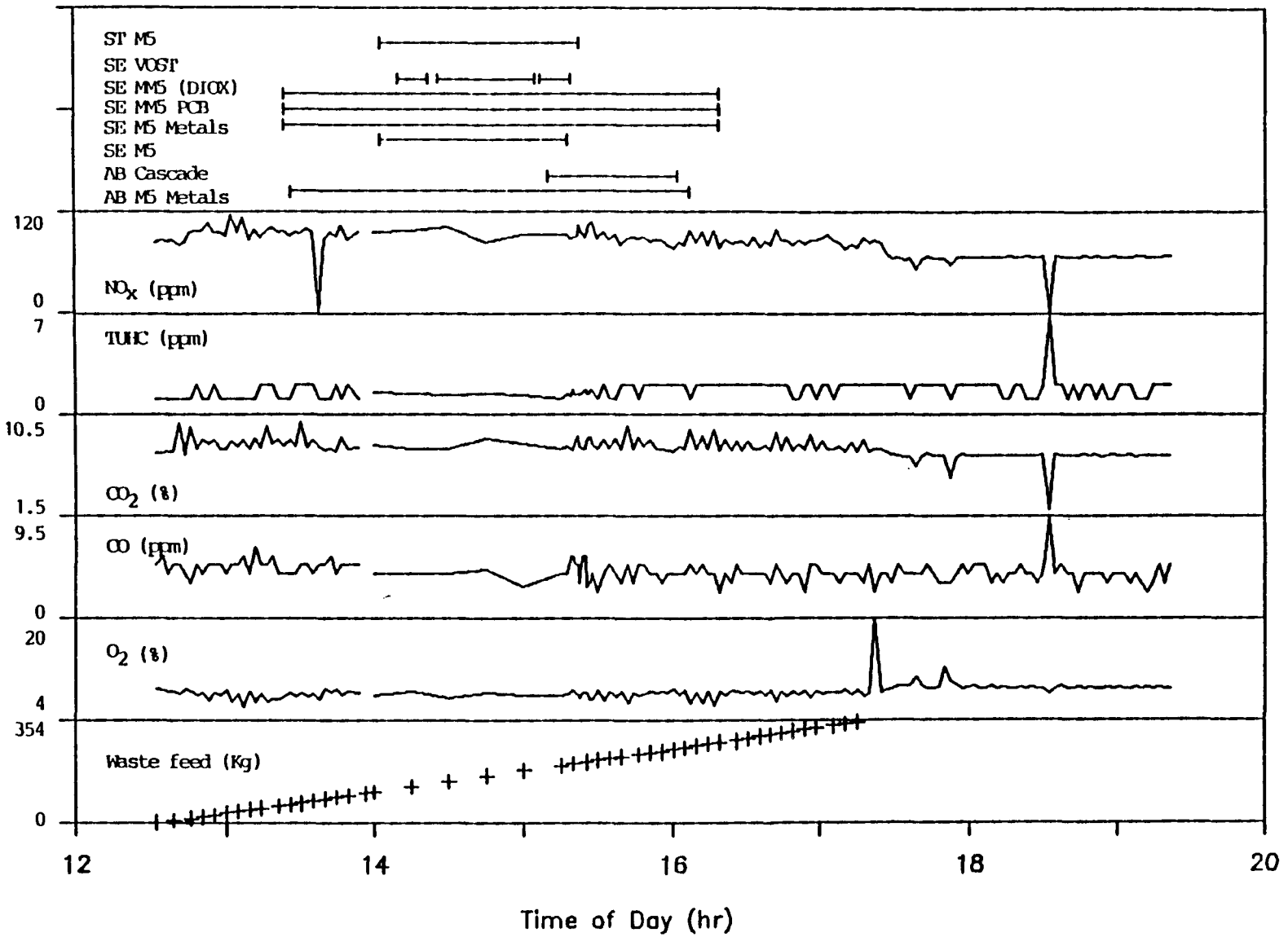

TEST 1 (3/15/91)

STACK CEM's

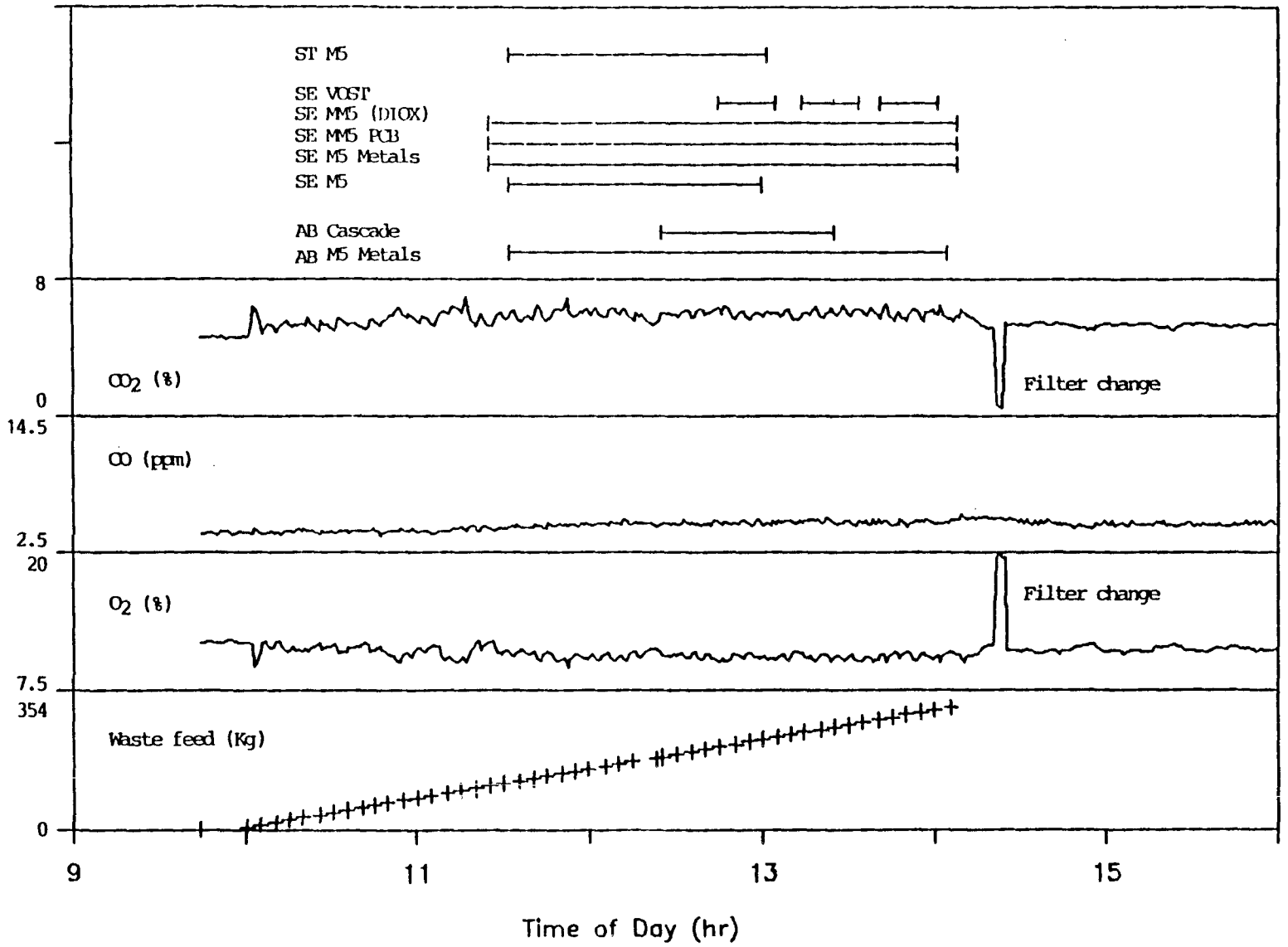

TEST 2 (3/19/91)

STACK CEM's

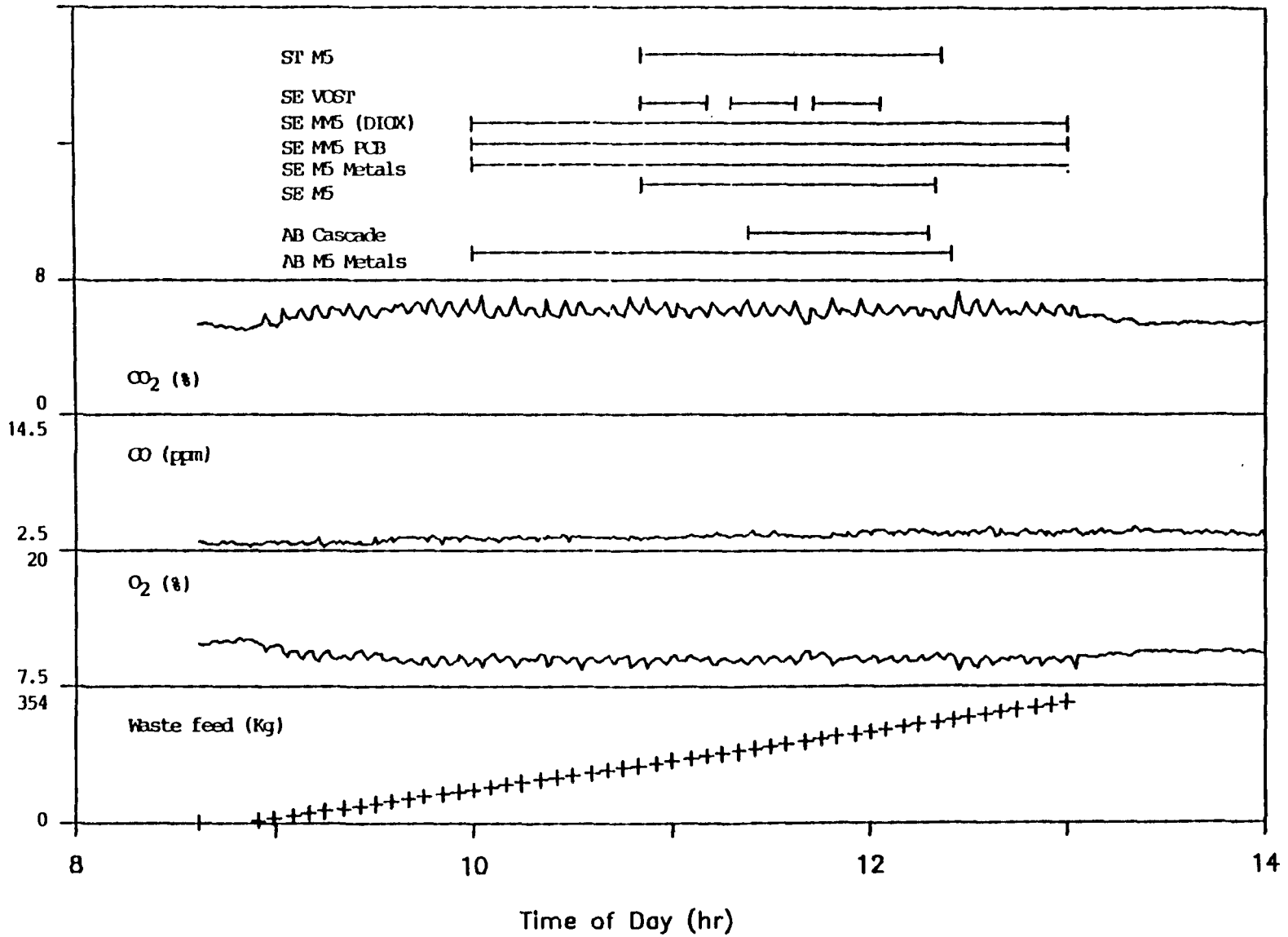

TEST 3a (3/21/91)

STACK CEM's

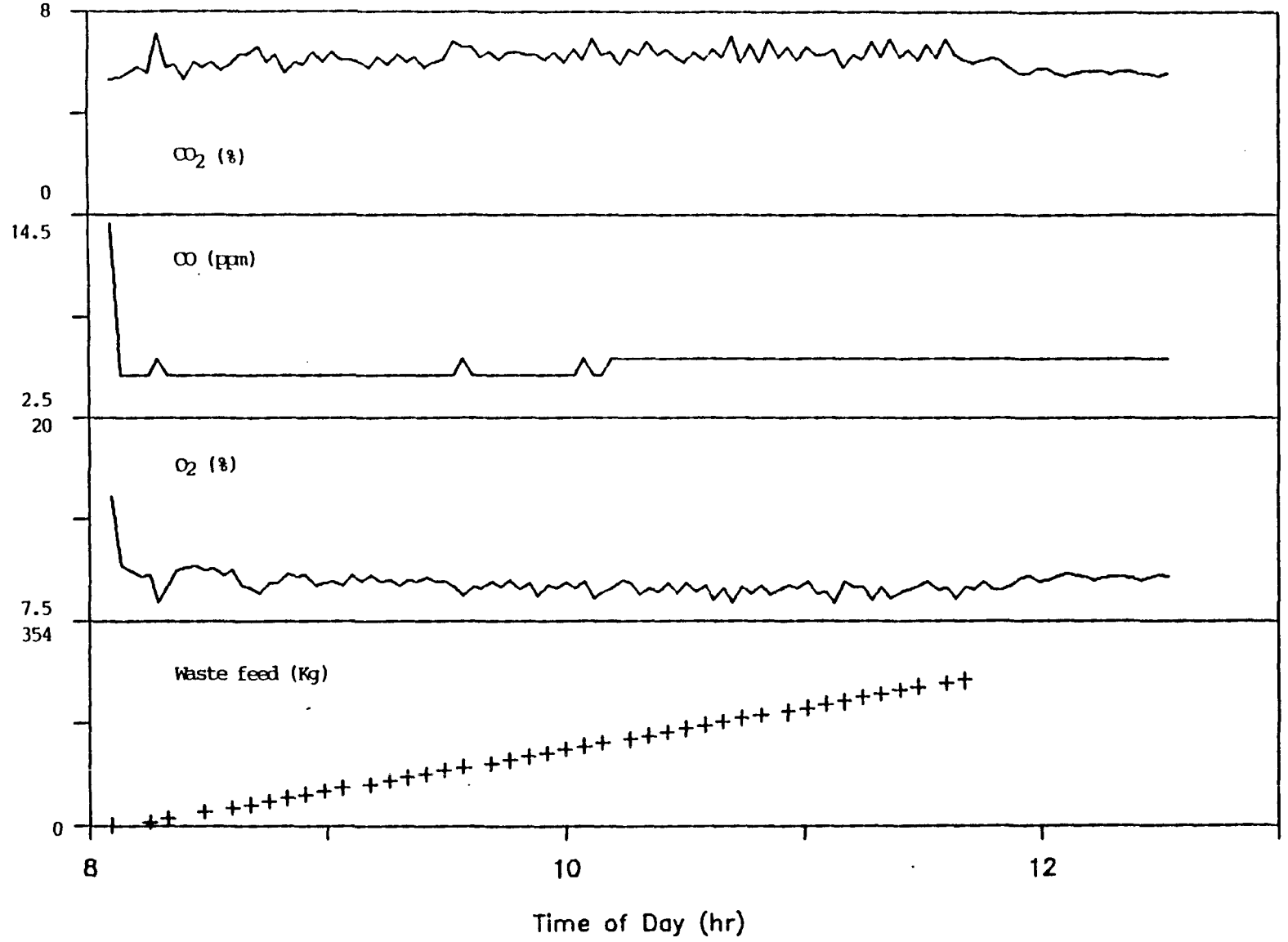

TEST 3b (3/21/91)

STACK CEM's

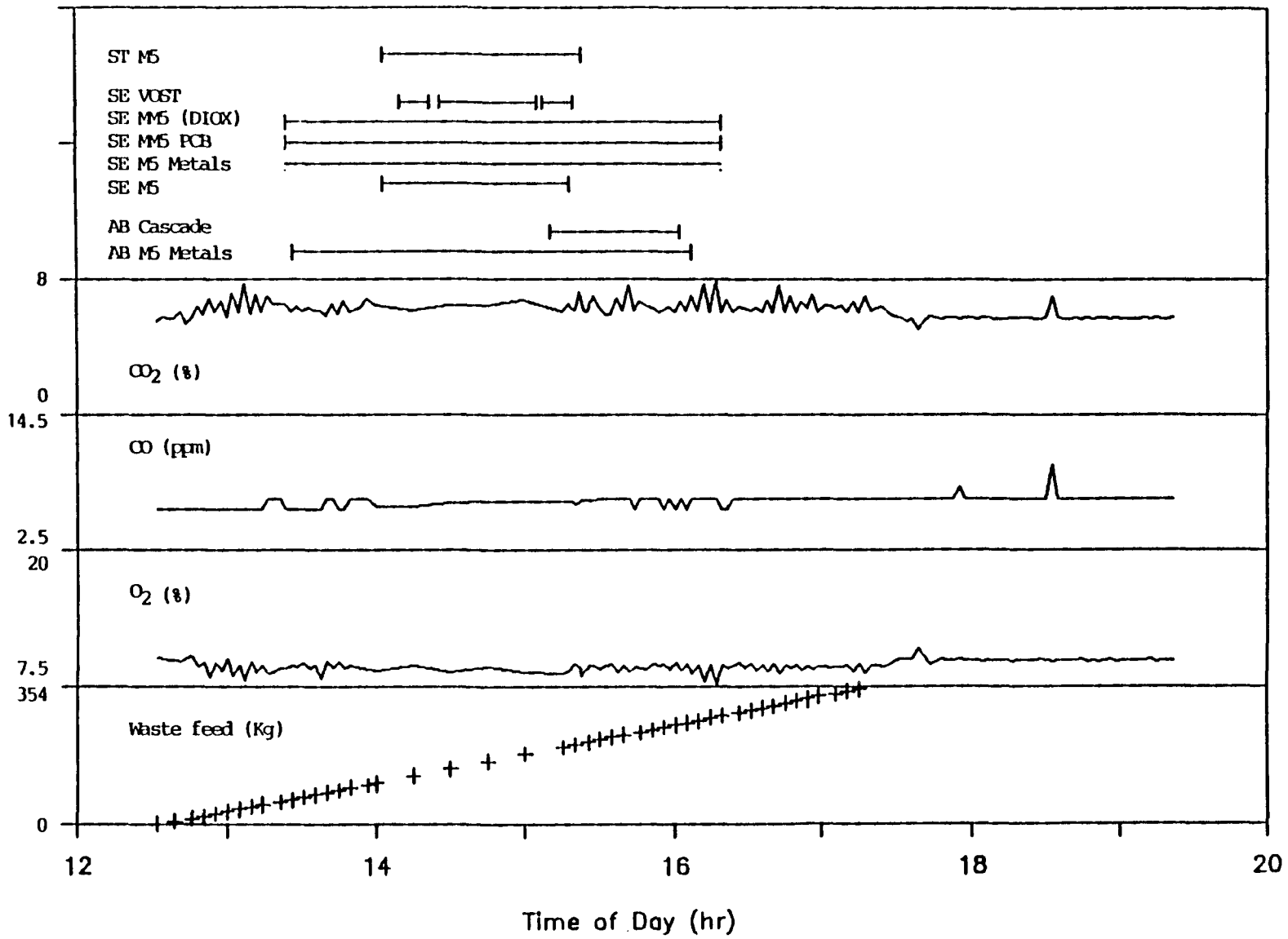

APPENDIX C

LABORATORY ANALYSIS DATA

APPENDIX C-1

PROXIMATE AND ULTIMATE ANALYSES

GALBRAITH
Laboratories, Inc.
QUANTITATIVE MICROANALYSES
ORGANIC — INORGANIC
PHONE 615/546-1335 FAX 615/546-7209

HARRY W. GALBRAITH PH.D
CHAIRMAN OF THE BOARD
KENNETH S. WOODS
PRESIDENT
VELMA M. RUSSELL
SECRETARY-TREASURER
DAVID J. STROM
SENIOR VICE-PRESIDENT
GAIL R. HUTCHENS
EXECUTIVE VICE-PRESIDENT
WILLIAM M. LONGMIRE
VICE-PRESIDENT
TECHNICAL SERVICES

Corrected Letter

Ms. Joan Bass
Acurex Corporation
Hwy 65 N. NCTR Bldg. 45
Jefferson, Arkansas 72079

August 13, 1991

Received: July 22nd

Dear Ms. Bass:

Analysis of your compound gave the following results:

Your #,	Our #,	Analyses,	
F03141350 Comp	S-0147	Ultimate,	
		% Moisture	63.89
		% Carbon	11.06
		% Hydrogen	1.21
		% Kjeldahl Nitrogen	0.38
		% Sulfur	0.59
		% Chlorine	0.85
		% Ash	28.50
		% Oxygen (By Diff)	57.41
		Proximate,	
		% Moisture	63.89
		% Ash	28.50
		% Volatile Matter	5.91
		% Fixed Carbon (By Diff)	1.44
		BTU/lb	948

Sincerely yours,

GALBRAITH LABORATORIES, INC.

Gail R. Hutchens

Gail R. Hutchens
Exec. Vice-President

GRH:dse

APPENDIX C-2

TRACE METALS ANALYSES

METALS ANALYSIS BY INDUCTIVELY COUPLED PLASMA

CONTRACTOR: Technology Applications, Inc.
DATE RECEIVED: 04/09/91
REQUESTOR: Richards
PAGES REPORTED: 3
FILE NAME: RI$0001
DATE OF ANALYSIS: 05/09/91
CHECKED BY: JM 5.22.91

PROJECT: New Bedford Harbor
DATE REPORTED 05/22/91
MATRIX: LEACHATES,LIQUIDS,SOLIDS
METHODS: SW 846 - 3010,3050,6010
DISC: CARROLL

Results expressed in mg/kg for solids, mg/l for liquids including digested standards and blanks.

LAB ID	SAMPLE ID	WT(gm)	VOL(ml)	Cd	Cr	Cu	Pb
91-02031	E0315112511,2,3,4		100	<.02	<.03	0.112	<.05
91-02032	E03151125PW		30	3.38	16.6	43.5	97.5
91-02033	E0319100011,2,3,4		100	<.02	<.03	0.116	0.095
91-02034	E03191000PW		30	6.07	7.95	48.9	149
91-02035	E0321134011,2,3,4		100	0.027	0.054	0.396	0.682
91-02036	E03211340PW		30	7.85	7.35	69.1	201
91-02037	A0315113311,2,3,4		50	<.04	0.099	0.145	0.133
91-02038	A03151133PW		30	3.68	21.0	56.9	105
91-02039	A0319100011,2,3,4		100	<.02	<.03	<.02	<.05
91-02040	A03191000PW		30	7.23	12.8	73.1	176
91-02041	A0321134411,2,3,4		100	<.02	<.03	0.188	<.05
91-02042	A03211344PW		20	4.82	12.1	48.7	97.0
91-02043	B03151640		100	0.138	1.94	4.46	8.77
91-02044	B03191520		100	0.270	1.44	2.55	5.42
91-02045	B03212145		100	0.430	1.27	3.42	5.64
91-02046	F03141350TCLP		100	0.110	0.041	0.066	1.22
91-02047	F03141350COMP	1.13		7.39	161	308	236
91-02048	T03151405	1.01		9.49	376	608	277
91-02049	T03151405TCLP		100	0.267	0.048	6.32	0.706
91-02050	T03191300	1.00		2.72	434	828	75.6
91-02051	T03191300TCLP		100	0.046	<.03	3.01	0.168
91-02052	T03211715	1.00		<2	357	721	62.8
91-02053	T03211715TCLP		100	0.043	<.03	3.04	0.406
91-02054	Q03151600TCLPBK		100	<.02	<.03	0.239	<.05
91-02055	Q03151235BBK		100	<.02	<.03	0.362	<.05
91-02056	Q04031315 MSPBK	0.408		<5	34.5	6.61	<13
91-02057	Q04031510 MSIBK		100	<.02	<.03	0.225	<.05
91-02058	F03141200-A1	1.02		3.72	149	383	241
91-02059	F03141210-A2	1.03		<2	40.0	286	163
91-02060	F03141215-A3	1.02		7.35	169	346	281
91-02061	F03141220-A4	1.02		<2	46.6	160	163
91-02062	F03141225-B1	1.13		5.06	126	242	185
91-02063	F03141230-B2	1.01		22.4	242	388	252
91-02064	F03141235-B3	1.07		12.1	223	424	266
91-02065	F03141240-B4	1.05		9.52	230	353	241
91-02066	T03211140	1.02		2.32	367	785	96.0
91-02067	T03211140TCLP		100	0.026	<.03	1.50	0.162
DIG.BLANK 3010	DGSTD.4/11/91		100	<.02	<.03	0.125	<.05
DIG.STANDARD 3010	DGSTD.4/11/91		100	0.051	0.304	0.387	0.494
DIG.BLANK 3050	DGSTD.5/7/91		100	<.02	0.039	<.02	<.05
DIG.STANDARD 3050	DGSTD.5/7/91		100	0.091	0.557	0.519	0.978

Theoretical concentrations in digested standards :

3010	3050
0.05-Cd	0.10-Cd
0.30-Cr,Cu	0.60-Cr,Cu
0.50-Pb	1.00-Pb

Duplicate Sample Analysis
(Concentrations in ppm found in solution after digestion)

LAB ID	SAMPLE ID	WT(gm)	VOL.(ml)	Cd	Cr	Cu	Pb
91-02037	A0315113311,2,3,4		50	<.02	0.050	0.072	0.067
91-02037 dup	A0315113311,2,3,4		50	<.02	0.050	0.071	<.05
dup. % REL. RANGE				NC	1.80	1.53	NC
91-02048	T03151405	1.01		0.095	3.78	6.11	2.79
91-02048 dup.	T03151405	1.00		0.109	4.24	7.28	3.49
dup. % REL. RANGE				13.6	11.7	17.8	22.6
91-02054	Q03151600TCLPBK		100	<.02	<.03	0.239	<.05
91-02054 dup	Q03151600TCLPBK		100	<.02	<.03	0.234	<.05
dup. % REL. RANGE				NC	NC	1.99	NC
91-02055	Q03151235BBK		100	<.02	<.03	0.362	<.05
91-02055 dup.	Q03151235BBK		50	<.02	<.03	0.184	<.05
dup. % REL. RANGE				NC	NC	1.64	NC
91-02058	P031411200-A1	1.02		0.038	1.53	3.93	2.47
91-02058 dup.	P031411200-A1	1.04		0.047	2.22	5.05	3.02
dup. % REL. RANGE				19.8	35.9	24.0	18.8

NC- not calculated
NOTE: Duplicate percent relative range adjusted for sample weights/volumes digested.

MATRIX SPIKE/MATRIX SPIKE DUPLICATE RESULTS
(Concentrations in ppm found in solution after digestion)

LAB ID	SAMPLE ID		WT.(g)	VOL.(ml)	Cd	Cr	Cu	Pb
91-02048	T03151405		1.01		0.0954	3.78	6.11	2.79
91-02048 dup.	T03151405		1.00		0.109	4.24	7.28	3.49
91-02048 mat. spk.	T03151405		1.01		0.158	3.76	6.06	3.57
		%RECOVERY			55.4	*	*	41.9
91-02055	Q03151235BBK			100	<.02	<.03	0.362	<.05
91-02055 dup.	Q03151235BBK			50	<.02	<.03	0.184	<.05
91-02055 mat. spk.	Q03151235BBK			100	0.051	0.302	0.648	0.460
		%RECOVERY			101	101	94.2	92.0
91-02058	F031411200-A1		1.02		0.038	1.53	3.93	2.47
91-02058 dup.	F031411200-A1		1.04		0.047	2.22	5.05	3.02
91-02058 mat. spk.	F031411200-A1		1.14		0.126	2.20	4.58	3.52
		%RECOVERY			79.1	19.6	*	47.7
91-02067	T03211140TCLP			100	0.026	<.03	1.50	0.162
91-02067 mat. spk.	T03211140TCLP			100	0.070	0.293	1.75	0.598
		%RECOVERY			88.2	97.7	83.3	87.2

* - Level of spike insignificant to level of analyte (theoretical levels are same as 3010 digested standard for liquids, and 3050 digested standard for solids).

NOTE: Spike recoveries are adjusted for weight/volume of spiked matrix digested and average mg/kg or mg/l of original unknown and duplicate.

APPENDIX C-3

PCB ANALYSES

U.S. EPA IRF Laboratory
EPA Method 8080
By Hewlett Packard 5880 GC-ECD

PQL = Practical Quantitation Limit

Z = Composite Sample

Sample ID Number	F03141200	F03141210	F03141215	F03141220	F03141225	F03141230
Sample Matrix / Type	Feed	Feed	Feed	Feed	Feed	Feed
Collection Date	03-14-91	03-14-91	03-14-91	03-14-91	03-14-91	03-14-91
Extraction Date	03-18-91	03-18-91	03-18-91	03-18-91	03-18-91	03-28-91
Analysis Date	04-26-91	04-26-91	04-26-91	04-26-91	04-26-91	04-30-91
Analyte / Concentration	(mg/kg)	(mg/kg)	(mg/kg)	(mg/kg)	(mg/kg)	(mg/kg)
Target Analytes						
Aroclor 1242	11400	15100	3820	1230	4490	4410
Aroclor 1254	3030	5680	1170	715	1700	1050

Sample ID Number	F03141235	F03141240	F03141350 Z	F03141350 Z	F03141241
Sample Matrix / Type	Feed	Feed	Feed	Feed	Aroclor
Collection Date	03-14-91	03-14-91	03-14-91	03-14-91	03-14-91
Extraction Date	03-28-91	03-28-91	03-28-91	07-26-91	04-03-91
Analysis Date	04-30-91	04-30-91	04-30-91	08-13-91	05-02-91
Analyte / Concentration	(mg/kg)	(mg/kg)	(mg/kg)	(mg/kg)	(mg/kg)
Target Analytes					
Aroclor 1242	8170	1930	4850	5100	1050000
Aroclor 1254	1830	447	1300	1240	344000

Sample ID Number	T03151405	T03191300	T03211140	T03211715	
Sample Matrix / Type	Ash	Ash	Ash	Ash	Method PQL
Collection Date	03-15-91	03-19-91	03-21-91	03-21-91	
Extraction Date	03-28-91	03-28-91	03-28-91	03-28-91	
Analysis Date	04-30-91	04-30-91	05-02-91	04-30-91	
Analyte / Concentration	(mg/kg)	(mg/kg)	(mg/kg)	(mg/kg)	(mg/kg)
Target Analytes					
Aroclor 1242	133.	95.6	57.2	177.	45.0
Aroclor 1254	84.4	32.2	44.4	68.0	15.0

Analyst Wes Voelk Date 8-22-91 Laboratory Manager Dennis M Tofe Date 8/22/91

U.S. EPA IRF Laboratory
EPA Method 8080
By Hewlett Packard 5880 GC-ECD

PQL = Practical Quantitation Limit
ND = Not Detected

Sample ID Number	E03151125MM5	E03191000MM5	E03191000MM5	E03211340MM5	
Sample Matrix / Type	Flue Gas	Flue Gas	Flue Gas	Flue Gas	Method PQL
Collection Date	03-15-91	03-19-91	03-19-91	03-21-91	
Extraction Date	03-16-91	03-20-91	03-20-91	03-26-91	
Analysis Date	04-25-91	04-26-91	08-13-91	04-26-91	
Analyte / Concentration	(ug/train)	(ug/train)	(ug/train)	(ug/train)	(ug/train)
Target Analytes					
Aroclor 1242	2.68	2.10	1.15	< PQL	0.900
Aroclor 1254	0.787	0.828	0.703	< PQL	0.300

Sample ID Number	B03151640	B03191520	B03212145	
Sample Matrix / Type	Liquor	Liquor	Liquor	Method PQL
Collection Date	03-15-91	03-19-91	03-21-91	
Extraction Date	03-17-91	03-20-91	03-26-91	
Analysis Date	04-26-91	04-29-91	04-29-91	
Analyte / Concentration	(ug/L)	(ug/L)	(ug/L)	(ug/L)
Target Analytes				
Aroclor 1242	< PQL	ND	ND	0.900
Aroclor 1254	< PQL	ND	ND	0.300

Analyst Wes Vestal Date 8-20-91 Laboratory Manager Dennis G Taylor Date 8/20/91

U.S. EPA IRF Laboratory
EPA Method 8080
By Hewlett Packard 5880 GC-ECD

PQL = Practical Quantitation Limit
ND = Not Detected

Sample ID Number	Q07251613SBK	Q07251612ABK	Q08131610LBK	Q081316110FWBK	
Sample Matrix / Type	Solvent Blank	XAD-2 Blank	Liquor Blank	Organic Free Water Blank	Method PQL
Collection Date	07-25-91	07-25-91	08-13-91	08-13-91	
Extraction Date	07-26-91	07-26-91	08-13-91	08-13-91	
Analysis Date	08-13-91	08-13-91	08-13-91	08-13-91	
Analyte / Concentration	(ug/L)	(ug/L)	(ug/L)	(ug/L)	(ug/L)
Target Analytes					
Aroclor 1242	ND	ND	ND	ND	0.150
Aroclor 1254	ND	ND	ND	ND	0.0500

Sample ID Number	B03212145MS	B03212145MSD	EXADPCBMS	EXADPCBMSD
Sample Matrix / Type	Liquor Matrix Spike	Liquor Matrix Spike	XAD-2 Matrix Spike	XAD-2 Matrix Spike
Collection Date	03-21-91	03-21-91	06-19-91	06-19-91
Extraction Date	06-14-91	06-14-91	06-19-91	06-19-91
Analysis Date	07-11-91	07-11-91	07-11-91	07-11-91
Spike Mix / Recovery (%)				
Aroclor 1242	88.2	92 5	117.	97.3

Analyst [illegible] Date 8-20-91 Laboratory Manager Dennis M Tabor Date 8/20/91

Project : New Bedford Harbor

U.S. EPA IRF Laboratory
EPA Method 8080
By Hewlett Packard 5880 GC-ECD

Sample ID Number	T03211140MS	T03211140MSD
Sample Matrix / Type	Ash	Ash
Collection Date	03-21-91	03-21-91
Extraction Date	08-26-91	08-26-91
Analysis Date	08-27-91	08-27-91
Spike Mix / Recovery (%)		
Aroclor 1242	49.2	51.6

Analyst [illegible] Date 9-19-91 Laboratory Manager Dennis S Tabor Date 9/19/91

APPENDIX C-4

PAH ANALYSES

U.S. EPA IRF Laboratory
EPA Method 8270 Analyses Data
By Hewlett Packard 5880/5970B MSD

PQL = Practical Quantitation Limit A = Acid Surrogates not spiked.
ND = Not Detected
N/A = Not Applicable

Sample ID Number	T03151405	T03191300	T03211140	T03211715	
Sample Matrix/Type	Ash	Ash	Ash	Ash	Method PQL
Collection Date	03-15-91	03-19-91	03-21-91	03-21-91	
Extraction Date	03-28-91	03-28-91	03-28-91	03-28-91	
Analysis Date	04-17-91	04-17-91	04-17-91	04-18-91	
Analyte / Concentration	(mg/kg)	(mg/kg)	(mg/kg)	(mg/kg)	(mg/kg)
Target Analytes					
Naphthalene	ND	< PQL	< PQL	< PQL	1.33
Acenaphthene	ND	ND	ND	ND	1.33
Phenanthrene	< PQL	< PQL	< PQL	< PQL	1.33
Fluoranthene	< PQL	ND	< PQL	< PQL	1.33
Pyrene	< PQL	ND	< PQL	< PQL	1.33
Benzo(a)anthracene	< PQL	ND	ND	ND	1.33
Benzo(a)pyrene	ND	ND	ND	ND	1.33
Surrogate Compound /Recovery (%)					
2-Fluorophenol	A	A	A	A	N/A
Phenol d-6	A	A	A	A	N/A
Nitrobenzene d-5	95.4	86.8	82.9	120.	N/A
2-Fluorobiphenyl	80.3	74.2	71.2	83.1	N/A
2,4,6-Tribromophenol	A	A	A	A	N/A
4-Terphenyl d-14	76.3	69.5	76.4	88.0	N/A

Analyst Wes Vogel Date 8-22-91 Laboratory Manager Dennis J Tofa Date 8/20/91

U.S. EPA IRF Laboratory
EPA Method 8270 Analyses Data
By Hewlett Packard 5880/5970B MSD

PQL = Practical Quantitation Limit
ND = Not Detected
N/A = Not Applicable

Sample ID Number	B03151640	B03191520	B03212145	
Sample Matrix/Type	Liquor	Liquor	Liquor	Method PQL
Collection Date	03-15-91	03-19-91	03-21-91	
Extraction Date	03-17-91	03-20-91	03-26-91	
Analysis Date	04-13-91	04-13-91	04-13-91	
Analyte / Concentration	(ug/L)	(ug/L)	(ug/L)	(ug/L)
Target Analytes				
Naphthalene	ND	ND	ND	20.0
Acenaphthene	ND	ND	ND	20.0
Phenanthrene	ND	ND	ND	20.0
Fluoranthene	ND	ND	ND	20.0
Pyrene	ND	ND	ND	20.0
Benzo(a)anthracene	ND	ND	ND	20.0
Benzo(a)pyrene	ND	ND	ND	20.0
Surrogate Compound /Recovery (%)				
2-Fluorophenol	57.7	47.2	20.7	N/A
Phenol d-6	68.1	35.6	26.2	N/A
Nitrobenzene d-5	91.4	73.5	70.8	N/A
2-Fluorobiphenyl	66.9	58.0	55.2	N/A
2,4,6-Tribromophenol	62.5	56.2	37.8	N/A
4-Terphenyl d-14	80.8	63.4	54.9	N/A

Analyst [illegible] Date 8-20-91 Laboratory Manager Dennis G Tofe Date 8/20/91

U.S. EPA IRF Laboratory
EPA Method 8270 Analyses Data
By Hewlett Packard 5880/5970B MSD

PQL = Practical Quantitation Limit
ND = Not Detected
N/A = Not Applicable

A = Acid Surrogates not spiked

Sample ID Number	F03141350	F03141350	
Sample Matrix/Type	Feed	Feed	Method PQL
Collection Date	03-14-91	03-14-91	
Extraction Date	03-28-91	07-26-91	
Analysis Date	04-18-91	08-09-91	
Analyte / Concentration	(mg/kg)	(mg/kg)	(mg/kg)
Target Analytes			
Naphthalene	< PQL	ND	49.8
Acenaphthene	ND	ND	49.8
Phenanthrene	< PQL	< PQL	49.8
Fluoranthene	< PQL	< PQL	49.8
Pyrene	< PQL	< PQL	49.8
Benzo(a)anthracene	< PQL	< PQL	49.8
Benzo(a)pyrene	ND	ND	49.8
Surrogate Compound /Recovery (%)			
2-Fluorophenol	A	A	N/A
Phenol d-6	A	A	N/A
Nitrobenzene d-5	102.	63.1	N/A
2-Fluorobiphenyl	108.	76.2	N/A
2,4,6-Tribromophenol	A	A	N/A
4-Terphenyl d-14	115.	73.7	N/A

Analyst [illegible] Date 8-26-91 Laboratory Manager Dennis D Toler Date 8/20/91

U.S. EPA IRF Laboratory
EPA Method 8270 Analyses Data
By Hewlett Packard 5880/5970B MSD

PQL = Practical Quantitation Limit
ND = Not Detected
N/A = Not Applicable

Sample ID Number	E03151125AMM5	E03151125AMM5	E03191000AMM5	E03211340AMM5	
Sample Matrix/Type	E-Duct Flue Gas	E-Duct Flue Gas	E-Duct Flue Gas	E-Duct Flue Gas	Method PQL
Collection Date	03-15-91	03-15-91	03-19-91	03-21-91	
Extraction Date	03-16-91	03-16-91	03-20-91	03-26-91	
Analysis Date	04-11-91	08-08-91	04-11-91	04-11-91	
Analyte / Concentration	(ug/train)	(ug/train)	(ug/train)	(ug/train)	(ug/train)
Target Analytes					
Naphthalene	ND	ND	ND	ND	20.0
Acenaphthene	ND	ND	ND	ND	20.0
Phenanthrene	ND	ND	ND	ND	20.0
Fluoranthene	ND	ND	ND	ND	20.0
Pyrene	ND	ND	ND	ND	20.0
Benzo(a)anthracene	ND	ND	ND	ND	20.0
Benzo(a)pyrene	ND	ND	ND	ND	20.0
Surrogate Compound /Recovery (%)					
2-Fluorophenol	73.5	75.0	63.7	52.6	N/A
Phenol d-6	63.2	66.2	52.9	51.6	N/A
Nitrobenzene d-5	80.3	69.9	79.6	93.2	N/A
2-Fluorobiphenyl	85.2	66.2	81.3	88.2	N/A
2,4,6-Tribromophenol	74.6	82.6	60.6	84.5	N/A
4-Terphenyl d-14	76.7	67.1	71.0	78.0	N/A

Analyst Wes Vazfal Date 8-20-91 Laboratory Manager Dennis G Taha Date 8/20/91

U.S. EPA IRF Laboratory
EPA Method 8270 Analyses Data
By Hewlett Packard 5880/5970B MSD

PQL = Practical Quantitation Limit
ND = Not Detected
N/A = Not Applicable

B = Acid Surrogates spiked double.
C = Acid Surrogates not spiked.

Sample ID Number	T03211140MS	T03211140MSD	F01141351MS	F01141351MSD
Sample Matrix/Type	Ash Matrix Spike	Ash Matrix Spike	Feed Matrix Spike	Feed Matrix Spike
Collection Date	03-21-91	03-21-91	01-14-91	01-14-91
Extraction Date	06-18-91	06-18-91	06-23-91	06-23-91
Analysis Date	06-27-91	06-2o-91	06-28-91	06-28-91
Spike Compound / Recovery (%)				
Phenol	79.8	92.0	139.	121.
2-Chlorophenol	77.5	83.2	128.	116.
1,4-Dichlorobenzene	85.8	70.4	108.	120.
N-nitrosodi-n-propylamine	89.7	93.7	122.	128.
1,2,4-Trichlorobenzene	78.7	74.3	110.	124.
4-Chloro-3-methylphenol	77.3	86.8	120.	117.
Acenaphthene	80.6	80.9	109.	111.
4-Nitrophenol	70.5	66.5	69.9	70.9
2,4-Dinitrotoluene	82.4	87.8	93.9	99.7
Pentachlorophenol	59.9	59.5	72.2	54.4
Di-n-butylphthalate	75.3	77.4	63.7	49.3
Fluoranthene	58.5	65.8	73.2	47.8
Pyrene	121.	79.5	160.	91.7
Chrysene	74.1	80.1	136.	106.
Surrogate Compound / Recovery (%)				
2-Fluorophenol	78.0	85.1	248 B	C
Phenol d-6	87.6	96.9	272 B	C
Nitrobenzene d-5	80.5	85.5	108	108.
2-Fluorobiphenyl	74.5	76.5	109	109.
2,4,6-Tribromophenol	79.1	88.6	214 B	C
4-Terphenyl d-14	112.	73.4	114	114.

Analyst Wes Vaford Date 8-20-91 Laboratory Manager Dennis J Tabo Date 8/20/91

U.S. EPA IRF Laboratory
EPA Method 8270 Analyses Data
By Hewlett Packard 5880/5970B MSD

PQL = Practical Quantitation Limit
ND = Not Detected
N/A = Not Applicable

Sample ID Number	B03212145MS	B03212145MSD	EXADPAHMS	EXADPAHMSD
Sample Matrix/Type	Liquor Matrix Spike	Liquor Matrix Spike	MM5 Train Matrix Spike	MM5 Train Matrix Spike
Collection Date	03-21-91	03-21-91	06-18-91	06-18-91
Extraction Date	06-14-91	06-14-91	06-18-91	06-18-91
Analysis Date	06-27-91	06-27-91	06-27-91	06-27-91
Spike Compound / Recovery (%)				
Phenol	53.7	57.6	91.0	91.6
2-Chlorophenol	74.6	75.2	85.6	84.4
1,4-Dichlorobenzene	45.8	47.5	59.7	33.7
N-nitrosodi-n-propylamine	92.2	92.8	88.7	63.2
1,2,4-Trichlorobenzene	47.6	47.2	58.9	36.3
4-Chloro-3-methylphenol	74.8	66.8	89.1	85.1
Acenaphthene	72.1	72.4	62.7	63.6
4-Nitrophenol	35.6	63.9	93.6	78.1
2,4-Dinitrotoluene	83.4	90.6	67.2	77.8
Pentachlorophenol	77.8	88.0	85.4	81.3
Di-n-butylphthalate	85.7	96.8	69.0	75.6
Fluoranthene	72.8	86.4	67.6	76.8
Pyrene	108.	99.6	88.7	104.
Chrysene	77.5	82.7	67.5	85.0
Surrogate Compound / Recovery (%)				
2-Fluorophenol	56.5	70.0	86.6	87.4
Phenol d-6	57.4	67.0	94.7	98.3
Nitrobenzene d-5	78.1	70.6	77.9	76.5
2-Fluorobiphenyl	55.1	53.1	72.0	68.9
2,4,6-Tribromophenol	92.8	100.	90.8	91.6
4-Terphenyl d-14	107.	95.1	107.	102.

Analyst Wes Vestal Date 8-20-91 Laboratory Manager Dennis M Tabor Date 8/20/91

U.S. EPA IRF Laboratory
EPA Method 8270 Analyses Data
By Hewlett Packard 5880/5970B MSD

PQL = Practical Quantitation Limit
ND = Not Detected
N/A = Not Applicable

Sample ID Number	Q08131610TAPBK	Q081316110FWBK	Q07251613SBK	Q07251612ABK	
Sample Matrix/Type	Tap Water Blank	Organic Free Water Blank	Solvent Blank	XAD-2 Blank	Method PQL
Collection Date	08-13-91	08-13-91	07-25-91	07-25-91	
Extraction Date	08-13-91	08-13-91	07-26-91	07-26-91	
Analysis Date	08-14-91	08-14-91	08-09-91	08-09-91	
Analyte / Concentration	(ug/L)	(ug/L)	(ug/L)	(ug/L)	(ug/L)
Target Analytes					
Naphthalene	ND	ND	ND	ND	20.0
Acenaphthene	ND	ND	ND	ND	20.0
Phenanthrene	ND	ND	ND	ND	20.0
Fluoranthene	ND	ND	ND	ND	20.0
Pyrene	ND	ND	ND	ND	20.0
Benzo(a)anthracene	ND	ND	ND	ND	20.0
Benzo(a)pyrene	ND	ND	ND	ND	20.0
Surrogate Compound /Recovery (%)					
2-Fluorophenol	56.7	56.2	56.0	76.4	N/A
Phenol d-6	42.5	41.6	61.2	82.6	N/A
Nitrobenzene d-5	62.9	62.9	45.5	61.2	N/A
2-Fluorobiphenyl	56.9	53.8	43.8	57.7	N/A
2,4,6-Tribromophenol	71.0	76.7	53.3	69.1	N/A
4-Terphenyl d-14	81.1	56.0	49.7	73.7	N/A

Analyst [illegible] Date 8-20-91 Laboratory Manager Dennis G Tala Date 8/20/91

APPENDIX C-5

PCDD/PCDF ANALYSES

3.3 Sample Data

For each sample analyzed, a "sample data pack" is provided, which consists of:

3.3.1 Sample Data Summary Topsheet and Data Qualifiers

A Sample Data Summary Top Sheet (Figure 2), which summarizes the analyte concentrations, specific congener retention times, ion-abundance ratios and percent recoveries, analyst initials, date of analysis, TLI project number, Client identification, Client Sample identification, GC/MS file name, and continuing calibration file name. The terminology of the symbols used on the header of this reporting form (e.g., EMPC, ppt...) are given below.

On the Sample Data Summary Topsheets, the concentrations of the analytes are given either in parts per quadrillion (ppq), parts per trillion (ppt) or parts per billion (ppb). Absolute amounts (in pg or ng) are reported for "A" and "AA" sample types.

"RT" is the gas chromatographic retention time in minutes and seconds,

"number" is the number of GC peaks identified as PCDD/PCDF isomers in the totals reported for each homologous series,

"ratio" is the integrated ion-abundance ratio as shown in Table 7,

"DL" is the detection limit for samples presenting an analyte response that is less than 2.5 times the background level,

"EMPC", representing the estimated maximum possible concentration, is reported for GC/MS signals eluting within the PCDD/PCDF retention time windows established with the daily GC performance analysis, and which are characterized by a signal-to-noise ratio in excess of 2.5:1 but do not meet all of the qualitative identification criteria listed in Section 2.5. The "EMPC" is calculated by using the same expression used for reporting the identified analyte concentrations. The "DL" and "EMPC" are both reported in the same units used to report detected analytes.

"Flags" are used to warn the Data User of specific peculiarities associated with the results of a particular sample. For reporting results, the following specific data qualifiers are used:

S *This qualifier indicates that the response of a specific PCDD/PCDF isomer has exceeded the normal dynamic range of the mass spectrometer detection system. The corresponding signal is saturated and the reported analyte concentration*

is a "minimum estimate" regardless of whether or not the ion-abundance ratio or the retention time criteria are met. When the S qualifier is associated with the reporting of "totals", its use is to warn the Data User of the existence of one (not necessarily from a specific isomer) or more saturated signals for a given class of compounds.

I *This flag identifies a labeled compound (e.g., internal standard) for which the retention time criterion was not met due to the possible presence of coeluting interferences. The concentration of unlabeled analytes (computed relatively to the labeled standard in question) may be underestimated while the percent recoveries of the flagged labeled standard may be higher than reality.*

Note that this qualifier may also be used if several unexpected signals are found to elute in the vicinity of the labeled standards even though the former's identification criteria are met.

Q *A "Q" qualifier is used to warn the Data User of the existence of a "quantitative interference" as defined in Section 5.1.2.4.1 of Triangle Laboratories User Manual. The reported concentrations and percent recoveries may be questionable.*

A *When an "A" data qualifier is used in conjunction with the "Q" data qualifier, the results reported have been adjusted to reflect the change of sensitivity observed on the QC SICPs (Section 5). This will only apply to percent recoveries of labeled compounds when a quantitative interference is detected.*

N *Carbon-labeled internal standard characterized by a signal-to-noise ratio of less than 10:1 will be flagged by using the qualifier "N".*

R *This flag will be used to indicate that the results reported for the analytes (e.g., 1,2,3,7,8-PeCDD and total PeCDD) quantified relative to a specific internal standard (e.g., $^{13}C_{12}$-1,2,3,7,8-PeCDD) are rejected due to failure to achieve adequate recoveries (i.e., below QC limits) concomitantly with a low signal-to-noise ratio (S/N < 10:1) for the internal standard and associated specific analyte (Figure 13). In such cases, Triangle Labs recommends that the sample extraction and analysis be repeated to verify that no matrix effect is responsible for the observation(s).*

V *A "V" flag indicates that the analytical results reported for the associated analytes are considered valid even though the percent recoveries of the internal standard are below the QC limits. Thus, Triangle Labs considers that a re-extraction of the sample is not warranted. Please refer to Section 5.1.3.4.1 for additional explanations.*

B *This flag is used when the analyte is found in the associated laboratory method blank sample as well as in the field sample. The flag is to warn the Data User of the possible/probable blank contamination.*

L *This flag identifies detected analytes for which the reported concentrations are below the working calibration curve of the GC/MS system.*

E *This data qualifier is used to warn the Data User of the presence of signals in the polychlorinated diphenylether channels that may interfere with the determination of polychlorinated dibenzofurans.*

RO *Internal standards for which the ion-abundance ratio is measured outside the acceptable range are flagged with "RO" to indicate the possibility of the presence of a coeluting interference.*

PR *The presence of "poorly resolved" GC peaks is flagged by using the PR data qualifier. This will normally be used for specific analytes only.*

X *Other specific flags and footnotes may be required to properly define the results. If used, they will be fully described in the Case Narrative. If more than one is necessary, a different letter (e.g., Y, Z..) will be used.*

3.3.2 "Raw Data" and "Matched Peaks" Files

A set of dBase-generated pages ("Raw Data" file; Figure 6) reporting the mass of the ions monitored, their corresponding area measurements and retention times for all the GC/MS peaks recorded within the appropriate retention time windows is provided following the Sample Data Summary Sheet. The data can be used by the Data User during the audit to recalculate the results reported on the Sample Data Summary Top Sheet. Additionally, the "Matched Peaks" file (Figure 7) summarizes the ion- abundance ratios ("RATIO") and relative retention times ("REL_RT") of the GC/MS signals. Note that under the header "M_Z" of the "Matched Peaks" file are represented the low-mass ions used in the computation of the ratios (e.g., M/Z 316 = m/z 316/ m/z 318; the values originate from the corresponding m/z's with the correct retention time from the "Raw Data" file). The results from the computation of the ion-abundance ratios ("MATCH RAT") and relative retention times ("MATCH RT") are compared to tolerance windows (as stipulated in Section 2.5) and a true "T" or false "F" statement is printed depending on the outcome of the computation and the acceptable values.

TRIANGLE LABORATORIES, INC.
PCDD/PCDF 2378X ANALYSIS (a)

05/02/91

FILE NAME....: S912026 CLIENT.....: ACUREX TLI SAMPLE ID.: 42-149-2
CONCAL.....: S912020 SAMPLE ID....: E03151125 MM5
ANALYST.....: LH ANALYSIS DATE: 04/26/91 PROJECT NUMBER: 17844
SAMPLE SIZE..: 1.00 SAMPLE MATRIX: MM5 DATE RECEIVED.: 04/05/91
ICAL DATE....: 03/05/91 SAMPLE ORIGIN: n/a DATE COLLECTED: / /
SPIKE FILE...: SPX23704 CLIENT PROJECT: NEW BEDF

NAME	AMT(ng)	NUMBER	DL	EMPC	RATIO	RT	FLAGS
2378-TCDD	0.01				0.67	32:45	
12378-PeCDD	0.006				1.37	38:10	
123478-HxCDD	0.004				1.25	42:58	
123678-HxCDD	0.005				1.34	43:07	
123789-HxCDD	0.007				1.17	43:34	
1234678-HpCDD	EMPC			0.03			
OCDD	0.16				0.84	54:02	B
2378-TCDF	1.7				0.74	31:57	
12378-PeCDF	0.28				1.70	36:45	
23478-PeCDF	0.33				1.56	37:43	
123478-HxCDF	0.13				1.16	41:50	
123678-HxCDF	0.05				1.13	42:01	
234678-HxCDF	0.06				1.15	42:48	D PR
123789-HxCDF	EMPC			0.005			
1234678-HpCDF	EMPC			0.04			
1234789-HpCDF	0.009				0.97	48:55	
OCDF	0.05				0.79	54:20	
TOTAL TCDD	0.06	8		0.09	0.76		
TOTAL PeCDD	0.02	6		0.08	1.57		
TOTAL HxCDD	0.04	6			1.26		
TOTAL HpCDD	0.03	1		0.06	0.91		
TOTAL TCDF	10.4	14		10.4	0.76		
TOTAL PeCDF	2.9	15			1.57		
TOTAL HxCDF	0.49	10		0.50	1.19		Q
TOTAL HpCDF	0.02	2		0.09	0.94		

Reviewed By: MJD 5/2/91 X237_RPT 3.04, LARS Version 3.18.05

TRIANGLE LABORATORIES, INC.
PCDD/PCDF 2378X ANALYSIS (a) QA/QC SUMMARY

05/02/91

FILE NAME....:	S912026	CLIENT.....:	ACUREX	TLI SAMPLE ID.:	42-149-2
CONCAL.....:	S912020	SAMPLE ID....:	E03151125 MM5		
ANALYST.....:	LH	ANALYSIS DATE:	04/26/91	PROJECT NUMBER:	17844
SAMPLE SIZE..:	1.00	SAMPLE MATRIX:	MM5	DATE RECEIVED.:	04/05/91
ICAL DATE....:	03/05/91	SAMPLE ORIGIN:	n/a	DATE COLLECTED:	/ /
SPIKE FILE...:	SPX23704			CLIENT PROJECT:	NEW BEDF

ALTERNATE STANDARDS RECOVERY SUMMARY (TYPE A)

NAME	AMT (ng)	% REC.	RATIO	RT	FLAGS
13C12-HxCDF 789	3.5	86.5	0.51	43:58	
13C12-HxCDF 234	3.8	95.2	0.51	42:47	R

INTERNAL STANDARDS RECOVERY SUMMARY

NAME	AMT (ng)	% REC.	RATIO	RT	FLAGS
13C12-2378-TCDF	3.2	79.4	0.76	31:55	
13C12-2378-TCDD	3.5	87.3	0.79	32:44	
13C12-PeCDF 123	4.3	107	1.49	36:43	
13C12-PeCDD 123	5.4	136	1.65	38:10	Q
13C12-HxCDF 678	3.3	81.4	0.50	42:00	
13C12-HxCDD 678	3.6	90.7	1.22	43:06	
13C12-HpCDF 678	3.1	78.4	0.44	46:30	
13C12-HpCDD 678	3.2	81.0	1.01	48:09	
13C12-OCDD	4.5	56.5	0.87	54:01	

Reviewed By: MJD 5/2/91 X237_RPT 3.04, LARS Version 3.18.05

TRIANGLE LABORATORIES, INC.
PCDD/PCDF 2378X ANALYSIS (a)

05/02/91

FILE NAME....: S912027 CLIENT.....: ACUREX TLI SAMPLE ID.: 42-149-3
CONCAL.....: S912020 SAMPLE ID....: E03191000 MM5
ANALYST.....: LH ANALYSIS DATE: 04/26/91 PROJECT NUMBER: 17844
SAMPLE SIZE..: 1.00 SAMPLE MATRIX: MM5 DATE RECEIVED.: 04/05/91
ICAL DATE....: 03/05/91 SAMPLE ORIGIN: n/a DATE COLLECTED: / /
SPIKE FILE...: SPX23704 CLIENT PROJECT: NEW BEDF

NAME	AMT(ng)	NUMBER	DL	EMPC	RATIO	RT	FLAGS
2378-TCDD	0.01				0.74	32:46	
12378-PeCDD	EMPC			0.005			
123478-HxCDD	EMPC			0.005			
123678-HxCDD	0.005				1.17	43:08	
123789-HxCDD	ND		0.005				
1234678-HpCDD	0.05				1.05	48:10	
OCDD	0.24				0.87	54:03	B
2378-TCDF	1.1				0.73	31:58	
12378-PeCDF	0.13				1.55	36:46	
23478-PeCDF	0.12				1.47	37:43	
123478-HxCDF	0.08				1.23	41:51	
123678-HxCDF	0.03				1.21	42:01	
234678-HxCDF	0.04				1.10	42:48	
123789-HxCDF	0.003				1.27	43:59	
1234678-HpCDF	0.04				0.97	46:31	
1234789-HpCDF	0.01				0.94	48:55	
OCDF	0.04				0.96	54:18	
TOTAL TCDD	0.04	5		0.07	0.75		
TOTAL PeCDD	0.04	4		0.05	1.52		
TOTAL HxCDD	0.03	3		0.05	1.23		
TOTAL HpCDD	0.09	2			1.08		
TOTAL TCDF	7.1	14			0.74		
TOTAL PeCDF	1.2	15		1.2	1.53		
TOTAL HxCDF	0.28	7		0.31	1.19		
TOTAL HpCDF	0.08	4			1.01		

Reviewed By: MSD 5/2/91 X237_RPT 3.04, LARS Version 3.18.05

TRIANGLE LABORATORIES, INC.
PCDD/PCDF 2378X ANALYSIS (a) QA/QC SUMMARY

05/02/91

FILE NAME....: S912027 CLIENT.....: ACUREX TLI SAMPLE ID.: 42-149-3
CONCAL.....: S912020 SAMPLE ID....: E03191000 MM5
ANALYST.....: LH ANALYSIS DATE: 04/26/91 PROJECT NUMBER: 17844
SAMPLE SIZE..: 1.00 SAMPLE MATRIX: MM5 DATE RECEIVED.: 04/05/91
ICAL DATE....: 03/05/91 SAMPLE ORIGIN: n/a DATE COLLECTED: / /
SPIKE FILE...: SPX23704 CLIENT PROJECT: NEW BEDF

ALTERNATE STANDARDS RECOVERY SUMMARY (TYPE A)

NAME	AMT (ng)	% REC.	RATIO	RT	FLAGS
13C12-HxCDF 789	4.0	100	0.50	43:58	___
13C12-HxCDF 234	4.8	119	0.50	42:47	___

INTERNAL STANDARDS RECOVERY SUMMARY

NAME	AMT (ng)	% REC.	RATIO	RT	FLAGS
13C12-2378-TCDF	3.4	84.5	0.75	31:57	___
13C12-2378-TCDD	3.8	94.8	0.81	32:44	___
13C12-PeCDF 123	4.1	104	1.49	36:45	___
13C12-PeCDD 123	4.5	111	1.49	38:10	___
13C12-HxCDF 678	3.8	94.1	0.50	42:00	___
13C12-HxCDD 678	4.1	102	1.19	43:06	___
13C12-HpCDF 678	3.8	94.7	0.45	46:30	___
13C12-HpCDD 678	4.0	100	1.02	48:09	___
13C12-OCDD	6.0	75.1	0.87	54:02	___

Reviewed By: |_____ __/__/__| X237_RPT 3.04, LARS Version 3.18.05

TRIANGLE LABORATORIES, INC.
PCDD/PCDF 2378X ANALYSIS (a)

05/02/91

FILE NAME....: S912028 CLIENT.....: ACUREX TLI SAMPLE ID.: 42-149-1
CONCAL.....: S912020 SAMPLE ID....: E03211340 MM5
ANALYST.....: CP ANALYSIS DATE: 04/26/91 PROJECT NUMBER: 17844
SAMPLE SIZE..: 1.00 SAMPLE MATRIX: MM5 DATE RECEIVED.: 04/05/91
ICAL DATE....: 03/05/91 SAMPLE ORIGIN: n/a DATE COLLECTED: / /
SPIKE FILE...: SPX23704 CLIENT PROJECT: NEW BEDF

NAME	AMT(ng)	NUMBER	DL	EMPC	RATIO	RT	FLAGS
2378-TCDD	0.01				0.83	32:45	
12378-PeCDD	ND		0.01				
123478-HxCDD	ND		0.01				
123678-HxCDD	ND		0.008				
123789-HxCDD	ND		0.01				
1234678-HpCDD	0.03				0.94	48:10	
OCDD	0.11				0.96	54:04	B
2378-TCDF	1.0				0.71	31:57	
12378-PeCDF	0.13				1.74	36:45	
23478-PeCDF	0.17				1.68	37:41	
123478-HxCDF	0.14				1.13	41:50	
123678-HxCDF	0.05				1.19	42:01	
234678-HxCDF	0.08				1.21	42:47	
123789-HxCDF	ND		0.008				
1234678-HpCDF	0.08				0.98	46:30	
1234789-HpCDF	EMPC			0.02			
OCDF	0.06				0.88	54:20	
TOTAL TCDD	0.03	2		0.07	0.85		
TOTAL PeCDD	EMPC			0.02			
TOTAL HxCDD	0.03	1		0.04	1.09		
TOTAL HpCDD	0.07	2			1.03		
TOTAL TCDF	5.5	12		5.6	0.75		
TOTAL PeCDF	1.6	11		1.7	1.62		
TOTAL HxCDF	0.55	7		0.60	1.20		
TOTAL HpCDF	0.09	1		0.15	0.98		

Reviewed By: MSD 5/2/91 X237_RPT 3.04, LARS Version 3.18.05

TRIANGLE LABORATORIES, INC.
PCDD/PCDF 2378X ANALYSIS (a) QA/QC SUMMARY

05/02/91

FILE NAME....:	S912028	CLIENT.....:	ACUREX	TLI SAMPLE ID.:	42-149-1
CONCAL.....:	S912020	SAMPLE ID....:	E03211340 MM5		
ANALYST.....:	CP	ANALYSIS DATE:	04/26/91	PROJECT NUMBER:	17844
SAMPLE SIZE..:	1.00	SAMPLE MATRIX:	MM5	DATE RECEIVED.:	04/05/91
ICAL DATE....:	03/05/91	SAMPLE ORIGIN:	n/a	DATE COLLECTED:	/ /
SPIKE FILE...:	SPX23704			CLIENT PROJECT:	NEW BEDF

ALTERNATE STANDARDS RECOVERY SUMMARY (TYPE A)

NAME	AMT (ng)	% REC.	RATIO	RT	FLAGS
13C12-HxCDF 789	3.5	87.9	0.50	43:57	—
13C12-HxCDF 234	4.2	105	0.52	42:46	—

INTERNAL STANDARDS RECOVERY SUMMARY

NAME	AMT (ng)	% REC.	RATIO	RT	FLAGS
13C12-2378-TCDF	3.1	76.8	0.77	31:55	—
13C12-2378-TCDD	3.2	80.0	0.79	32:44	—
13C12-PeCDF 123	3.4	84.0	1.48	36:43	—
13C12-PeCDD 123	3.6	89.1	1.61	38:09	—
13C12-HxCDF 678	3.2	79.2	0.51	42:00	—
13C12-HxCDD 678	3.7	92.0	1.20	43:06	—
13C12-HpCDF 678	3.1	77.6	0.45	46:29	—
13C12-HpCDD 678	3.3	81.3	0.99	48:09	—
13C12-OCDD	4.7	58.1	0.86	54:01	—

Reviewed By: MEJ 5/2/91 X237_RPT 3.04, LARS Version 3.18.05

TRIANGLE LABORATORIES, INC.
PCDD/PCDF 2378X ANALYSIS (a)

05/02/91

FILE NAME....: S912025
CONCAL.....: S912020
ANALYST.....: LH
SAMPLE SIZE..: 1.00
ICAL DATE....: 03/05/91
SPIKE FILE...: SPX23704

CLIENT.....: ACUREX
SAMPLE ID....: TLI BLANK
ANALYSIS DATE: 04/26/91
SAMPLE MATRIX: n/a
SAMPLE ORIGIN: n/a

TLI SAMPLE ID.: n/a
PROJECT NUMBER: 17844
DATE RECEIVED.: / /
DATE COLLECTED: / /
CLIENT PROJECT: n/a

NAME	AMT(ng)	NUMBER	DL	EMPC	RATIO	RT	FLAGS
2378-TCDD	ND		0.02				—
12378-PeCDD	ND		0.03				—
123478-HxCDD	ND		0.03				—
123678-HxCDD	ND		0.02				—
123789-HxCDD	ND		0.03				—
1234678-HpCDD	ND		0.04				—
OCDD	EMPC			0.16			—
2378-TCDF	ND		0.01				—
12378-PeCDF	ND		0.02				—
23478-PeCDF	ND		0.02				—
123478-HxCDF	ND		0.02				—
123678-HxCDF	ND		0.02				—
234678-HxCDF	ND		0.02				—
123789-HxCDF	ND		0.03				—
1234678-HpCDF	ND		0.02				—
1234789-HpCDF	ND		0.03				—
OCDF	ND		0.07				—
TOTAL TCDD	ND		0.02				—
TOTAL PeCDD	ND		0.03				—
TOTAL HxCDD	ND		0.03				—
TOTAL HpCDD	ND		0.04				—
TOTAL TCDF	ND		0.01				—
TOTAL PeCDF	ND		0.02				—
TOTAL HxCDF	ND		0.02				—
TOTAL HpCDF	ND		0.02				—

Reviewed By: MSD 5/2/91 X237_RPT 3.04, LARS Version 3.18.05

TRIANGLE LABORATORIES, INC.
PCDD/PCDF 2378X ANALYSIS (a) QA/QC SUMMARY

05/02/91

FILE NAME....:	S912025	CLIENT.....:	ACUREX	TLI SAMPLE ID.:	n/a
CONCAL.....:	S912020	SAMPLE ID....:	TLI BLANK		
ANALYST.....:	LH	ANALYSIS DATE:	04/26/91	PROJECT NUMBER:	17844
SAMPLE SIZE..:	1.00	SAMPLE MATRIX:	n/a	DATE RECEIVED.:	/ /
ICAL DATE....:	03/05/91	SAMPLE ORIGIN:	n/a	DATE COLLECTED:	/ /
SPIKE FILE...:	SPX23704			CLIENT PROJECT:	n/a

ALTERNATE STANDARDS RECOVERY SUMMARY (TYPE A)

NAME	AMT (ng)	% REC.	RATIO	RT	FLAGS
13C12-HxCDF 789	3.0	76.1	0.52	43:59	___
13C12-HxCDF 234	3.9	97.5	0.51	42:48	___

INTERNAL STANDARDS RECOVERY SUMMARY

NAME	AMT (ng)	% REC.	RATIO	RT	FLAGS
13C12-2378-TCDF	2.1	52.0	0.80	31:57	___
13C12-2378-TCDD	2.1	51.3	0.82	32:45	___
13C12-PeCDF 123	2.4	61.2	1.51	36:45	___
13C12-PeCDD 123	3.5	86.9	1.67	38:10	___
13C12-HxCDF 678	3.1	77.8	0.51	42:01	___
13C12-HxCDD 678	3.7	93.6	1.20	43:07	___
13C12-HpCDF 678	3.2	79.7	0.45	46:31	___
13C12-HpCDD 678	3.2	81.1	1.01	48:10	___
13C12-OCDD	4.3	54.1	0.85	54:03	___

Reviewed By: MSD 5/2/91 X237_RPT 3.04, LARS Version 3.18.05

APPENDIX C-6

METHOD 0030 (VOST) ANALYSES

TAI
TECHNOLOGY APPLICATIONS, INC.

c/o ENVIRONMENTAL MONITORING & SUPPORT LABORATORY
U.S. ENVIRONMENTAL PROTECTION AGENCY
26 WEST MARTIN LUTHER KING DRIVE, CINCINNATI, OHIO 45219

513-569-7415

DATE: July 15, 1991

TO: Marta Richards, RREL

FROM: Peter Kauffman, EMSL/TAI Acting Lab Manager PK

SUBJECT: VOST Tube Analysis for Volatile Compounds

Attached, please find results of volatile analysis for 12 VOST tubes received by EMSL Analytical on March 26, 1991. It was noted while trying to run these samples that all tubes contained a dense liquid material which had to be forced from the tube with purging gas prior to sample purge and trapping. In several instances the liquid could not be expelled from the tube and no result could be obtained.

If you have any questions on these data, please contact Ballard Mullins at extension 4054 or me at extension 7564.

SUMMARY REPORT OF GC-MS FOR VOLATILE COMPOUNDS

CONTRACTOR: TAI
REQUESTOR: RICHARDS
DATE RECEIVED: 3/26/91
MATRIX: WATER
CHECKED BY: BMM
DISC: GC/MS VOA 6

ANALYST: BMM
DATE REPORT: 06/24/91
METHOD: SW-846: 8240
TOTAL PAGE REPORT: 3
APPROVED BY: PK
FILE: MR31591

VOLATILE COMPOUNDS	Concentration as ng							
LAB ID	91-01903	91-01904	91-01905	91-01906	91-01907	91-01908	91-01909	91-01910
SAMPLE ID	E0315 1245V NEW BED. HARBOR	E0315 1246V NEW BED. HARBOR	E0315 1314V NEW BED. HARBOR	E0315 1341V NEW BED. HARBOR	E0319 1051V NEW BED. HARBOR	E0319 1118V NEW BED. HARBOR	E0319 1143V NEW BED. HARBOR	E0319 1144V BK NEW BED. HARBOR
DATE SAMPLING	03/15/91	03/15/91	03/15/91	03/15/91	03/19/21	03/19/21	03/19/21	03/19/21
DATE RECEIVED	03/26/91	03/26/91	03/26/91	03/26/91	03/26/91	03/26/91	03/26/91	03/26/91
DATE ANALYZED	05/17/90	05/17/90	05/20/91	05/20/91	05/20/91	06/03/91	06/03/91	06/03/91
Acetone-B	331 *	179	ND	ND	ND	***	**	8.00
Benzene-B	ND	35.0	ND	ND	42.0	***	**	289
Bromodichloromethane-B	ND	ND	ND	ND	ND	***	**	ND
Bromoform-B	ND	ND	ND	ND	ND	***	**	13.0
2-Butanone-B	89.3	108	ND	ND	ND	***	**	ND
Carbon Disulfide-B	33.7	299 *	ND	ND	12.6	***	**	ND
Carbon Tetrachloride-B	ND	ND	ND	ND	ND	***	**	ND
Chlorobenzene-B	6.05	15.0	< 5	119	82.1	***	**	ND
2-Chloroethylvinylether-B	ND	ND	ND	ND	ND	***	**	ND
Chloroform-B	15.5	ND	ND	ND	ND	***	**	ND
Dibromochloromethane-B	ND	ND	ND	ND	ND	***	**	ND
1,1-Dichloroethane-B	ND	ND	ND	ND	ND	***	**	ND
1,2-Dichloroethane-B	ND	ND	ND	ND	ND	***	**	ND
1,1-Dichloroethene-B	52.3	ND	ND	ND	ND	***	**	ND
Trans-1,2-Dichloroethene-B	ND	ND	ND	ND	ND	***	**	ND
1,2-Dichloropropane-B	ND	ND	ND	ND	ND	***	**	ND
cis-1,3-Dichloropropene-B	ND	ND	ND	ND	ND	***	**	ND
Trans-1,3-Dichloropropene-B	ND	ND	ND	ND	ND	***	**	ND
Ethylbenzene-B	ND	ND	ND	ND	ND	***	**	ND
2-Hexanone-B	ND	ND	ND	ND	ND	***	**	ND
4-Methyl-2-Pentanone-B	ND	ND	ND	ND	ND	***	**	ND
Methylene Chloride-B	15900 *	2870 *	102	1548 *	ND	***	**	ND
Styrene-B	ND	125	130	48.7	319 *	***	**	316 *
1,1,2,2-Tetrachloroethane-B	ND	ND	ND	ND	ND	***	**	ND
Tetrachloroethene-B	ND	ND	ND	ND	ND	***	**	ND
Toluene-B	36.3	23.9	29.0	25.3	89.2	***	**	26.0
1,1,1-Trichloroethane-B	ND	ND	ND	ND	ND	***	**	ND
1,1,2-Trichloroethane-B	ND	ND	ND	ND	ND	***	**	ND
Trichloroethene-B	5.40	ND	ND	ND	ND	***	**	ND
Vinyl Acetate-B	ND	ND	ND	ND	ND	***	**	ND
Xylenes (Total)-B	ND	ND	ND	ND	ND	***	**	ND

* - RESULT IS OUTSIDE OF UPPER LIMIT OF STD CURVE. SHOULD BE CONSIDERED AS AN ESTIMATE

** - NO RESULTS COULD BE OBTAINED BECAUSE SAMPLE WAS BROKEN.

*** - TUBE WAS HEAVILY CLOGGED WITH THICK LIQUID MATERIAL. PURGE GAS COULD NOT BE FORCED THROUGH THE TUBE. NO RESULTS COULD BE OBTAINED FOR THIS SAMPLE.

SUMMARY REPORT OF GC-MS FOR VOLATILE COMPOUNDS

CONTRACTOR: TAI
REQUESTOR: RICHARDS
DATE RECEIVED: 3/26/91
MATRIX: WATER
CHECKED BY: BMM
DISC: GC/MS VOA 6

ANALYST: BMM
DATE REPORT: 06/24/91
METHOD: SW-846; #8240
TOTAL PAGE REPORT: 3
APPROVED BY: PK
FILE: MR31591

VOLATILE COMPOUNDS	Concentration as ng						
LAB ID	91-01911	91-01912	91-01913	91-01914	LAB	LAB	LAB
SAMPLE ID	E0321 1417V NEW BED. HARBOR	E0321 1443V NEW BED. HARBOR	E0321 1512V NEW BED. HARBOR	E0321 1514V NEW BED. HARBOR	BLANK	BLANK	BLANK
DATE SAMPLING	03/21/91	03/21/91	03/21/91	03/21/91	05/17/91	05/20/91	06/03/91
DATE RECEIVED	03/26/91	03/26/91	03/26/91	03/26/91			
DATE ANALYZED	06/03/91	06/03/91	06/03/91	06/03/91	05/17/91	05/20/91	06/03/91
Acetone-B	21.8	***	***	***	16.8	127	12.9
Benzene-B	191	***	***	***	92.0	211 *	51.0
Bromodichloromethane-B	ND	***	***	***	ND	ND	ND
Bromoform-B	26.4	***	***	***	ND	ND	ND
2-Butanone-B	9.00	***	***	***	ND	371 *	11.7
Carbon Disulfide-B	13.0	***	***	***	ND	10.5	ND
Carbon Tetrachloride-B	6.73	***	***	***	ND	ND	ND
Chlorobenzene-B	ND	***	***	***	ND	6.23	ND
2-Chloroethylvinylether-B	ND	***	***	***	ND	ND	ND
Chloroform-B	14.4	***	***	***	ND	ND	ND
Dibromochloromethane-B	ND	***	***	***	ND	ND	ND
1,1-Dichloroethane-B	ND	***	***	***	ND	ND	ND
1,2-Dichloroethane-B	ND	***	***	***	ND	ND	ND
1,1-Dichloroethene-B	5.53	***	***	***	ND	ND	ND
Trans-1,2-Dichloroethene-B	ND	***	***	***	ND	ND	ND
1,2-Dichloropropane-B	ND	***	***	***	ND	ND	ND
cis-1,3-Dichloropropene-B	ND	***	***	***	ND	ND	ND
Trans-1,3-Dichloropropene-B	ND	***	***	***	ND	ND	ND
Ethylbenzene-B	ND	***	***	***	ND	ND	ND
2-Hexanone-B	ND	***	***	***	ND	ND	ND
4-Methyl-2-Pentanone-B	ND	***	***	***	ND	ND	ND
Methylene Chloride-B	821 *	***	***	***	10.7	112	14.2
Styrene-B	175	***	***	***	ND	41.1	ND
1,1,2,2-Tetrachloroethane-B	ND	***	***	***	ND	ND	ND
Tetrachloroethene-B	ND	***	***	***	ND	ND	ND
Toluene-B	13.5	***	***	***	11.3	11.4	12.2
1,1,1-Trichloroethane-B	ND	***	***	***	ND	ND	ND
1,1,2-Trichloroethane-B	ND	***	***	***	ND	ND	ND
Trichloroethene-B	ND	***	***	***	ND	ND	ND
Vinyl Acetate-B	ND	***	***	***	ND	ND	ND
Xylenes (Total)-B	ND	***	***	***	ND	ND	ND

* - RESULT IS OUTSIDE OF UPPER LIMIT OF STD CURVE. SHOULD BE CONSIDERED AS AN ESTIMATE

** - NO RESULTS COULD BE OBTAINED BECAUSE SAMPLE WAS BROKEN.

*** - TUBE WAS HEAVILY CLOGGED WITH THICK LIQUID MATERIAL. PURGE GAS COULD NOT BE FORCED THROUGH THE TUBE. NO RESULTS COULD BE OBTAINED FOR THIS SAMPLE.

SUMMARY REPORT OF GC-MS FOR VOLATILE COMPOUNDS

CONTRACTOR: TAI
REQUESTOR: RICHARDS
DATE RECEIVED: 03/26/91
MATRIX: WATER
CHECKED BY: BMM
DISC: GC/MS VOA 6

ANALYST: BMM
DATE REPORT: 06/24/91
METHOD: SW-846; 8B240
TOTAL PAGE REPORT: 3
APPROVED BY: PK
FILE: MRS31591

Percent Recovery of Surrogate

QC Limit Range SAMPLE I.D.	ANALYSIS DATE	1,2-Dichloroethane-d4 (76-114)	Toluene-d8 (88-110)	BFB (86-115)
LAB BLANK	05/17/91	87.5	99.9	93.3
LAB BLANK	05/20/91	82.0	98.4	102
LAB BLANK	06/03/91	87.4	102	96.1
E03151245V, 91-01903	05/17/91	91.8	108	95.1
E03151246V, 91-01904	05/17/91	100	104	109
E03151314V, 91-01905	05/20/91	81.9	99.7	102
E03151341V, 91-01906	05/20/91	86.3	102	105
E03191051V, 91-01907	05/20/91	86.3	88.4	107
Q03191144V BK, 91-01910	06/03/91	95.7	112	101
E03211417V, 91-01911	06/03/91	87.3	129	95.1

APPENDIX C-7

FLUE GAS CHLORIDE TRAIN ANALYSES

Project: New Bedford Harbor
Report Number: NBH-1
Revision: 0

U.S. E.P.A I.R.F Laboratory

Particulate/HCl Train Chloride Report
By Ion-Selective Electrode

Sample ID Number	E03151133 IMPINGER 1	E03151133 IMPINGER 2	E03151133 IMPINGER 3	S03151133 IMPINGER 1	S03151133 IMPINGER 2	S03151133 IMPINGER 3
Collection Date	3/15/91	3/15/91	3/15/91	3/15/91	3/15/91	3/15/91
Analysis Date	9/05/91	9/05/91	9/05/91	9/05/91	9/05/91	9/05/91
Total Chloride (mg)	0.57	<0.17	<0.14	<0.25	<0.16	<0.13

Sample ID Number	E03191051 IMPINGER 1	E03191051 IMPINGER 2	E03191051 IMPINGER 3	S03191051 IMPINGER 1	S03191051 IMPINGER 2	S03191051 IMPINGER 3
Collection Date	03/19/91	03/19/91	03/19/91	03/19/91	03/19/91	03/19/91
Analysis Date	9/05/91	9/05/91	9/05/91	9/05/91	9/05/91	9/05/91
Total Chloride (mg)	6.76	0.14	0.11	17.63	0.22	0.15

Sample ID Number	E03211405 IMPINGER 1	E03211405 IMPINGER 2	E03211405 IMPINGER 3	S03211405 IMPINGER 1	S03211405 IMPINGER 2	S03211405 IMPINGER 3
Collection Date	03/21/91	03/21/91	03/21/91	03/21/91	03/21/91	03/21/91
Analysis Date	9/05/91	9/05/91	9/05/91	9/05/91	9/05/91	9/05/91
Total Chloride (mg)	0.96	0.84	0.25	23.69	0.33	<0.19

ANALYST Sharon King DATE 9/10/91

LAB SUPERVISOR Dennis J Tolka DATE 9/10/91

Project: New Bedford Harbor
Report Number: NBH-1
Revision: 0

U.S. E.P.A I.R.F Laboratory

Particulate/HCl Train Chloride Report
By Ion-Selective Electrode

Sample ID Number	DI H2O
Collection Date	3/15/91
Analysis Date	9/05/91
Total Chloride (mg)	<0.1

Sample ID Number	S03211405 IMPINGER 2 MS	S03211405 IMPINGER 2 MSD
Collection Date	03/21/91	03/21/91
Analysis Date	9/05/91	9/05/91
Spike Recovery (%)	79.4	78.7

ANALYST [illegible] DATE 9/10/91

LAB SUPERVISOR Dennis M Tafa DATE 9/10/91

APPENDIX D

SAMPLING TRAIN WORKSHEETS

ISOKINETIC RESULTS

Plant: IRF Updated 3-28-91 Performed by: ED HILL EH.d
Date: 3-15-91 Printed 04/04/91 Test No./Type: E03151125PCB
Sample Location: SCUBBER EXIT Start/Stop Time: 1125-1408

PARAMETER	SYMBOL	VALUE (calc.)
Nozzle Diameter, Actual (in)	N(d)	0.365
Pitot Tube Correction Factor	C(p)	0.84
Gas Meter Correction Factor	(alpha)	1.01
Stack (Duct) Dimensions (in):		
Radius (if round)	R	7
Length (if rectangular)	L	——
Width (if rectangular)	W	——
Area of Stack (sq ft)	A(s)	(1.06901)
# of Sample Points	#	13
Total Sampling Time (min)	(theta)	(156.00)
Barometric Pressure (in Hg)	P(b)	30.19
Stack Pressure (in H2O)	P(stack)	-5
Gas Meter Initial Reading (cu ft)		386.815
Gas Meter Final Reading (cu ft)		518.946
Net Gas Sample Volume (cu ft)	V(m)	(132.13)
Vol of Liquid Collected (ml)	Vl(c)	481.24
Vol of Liq @ Std. Conds. (scf)	V(w std)	(22.652)
Wt. of Filter Particulate (gm)		0
Wt. of Probe Wash Particulate (gm)		0
Wt of Combined Particulate (gm)	M(p)	(0.0000)
O2 Concentration (by CEM)	%	8.6
CO2 Concentration (by CEM)	%	7.6
CO Concentration (by CEM)	%	0
N2 Concentration (by diff.)	%	(83.80)

CALCULATED RESULTS FOR SAMPLE # — E03151125PCB

Isokineticity		% I	=	98.6
Metered Sample Gas Volume	(scf)	V(m std)	=	125.00
	(scm)	V(m std)	=	3.540
Stack Gas Flow, std cond.	(dscfm)	Q(s)	=	1197
std cond.	(dscm/min)	Q(s)	=	33.9
actual	(acfm)	Q(a)	=	1569
actual	(acm/min)	Q(a)	=	44.4
Particulate Loading, dry	(gr/dscf)	C(s std)	=	0.0000
@ 7% O2	(gr/dscf)	C(s std)	=	0.0000
@ 7% O2	(mg/dscm)	C(s std)	=	0
Particulate Emission Rate	(lb/hr)	E(p)	=	0.000
	(kg/hr)	E(p)	=	0.000
Stack Gas Water Vapor Proportion		B(wo)	=	0.153
Molecular Weight of Stack Gas, Dry		M(d)	=	29.56
Wet		M(s)	=	27.79
Stack Pressure, absolute (in Hg)		P(s)	=	29.82
Average Stack Velocity (ft/sec)		V(s avg)	=	24.5

Sample Point	dClock Time (min)	Velocity Head, dP (in H2O)	Orifice Meter, dH (in H2O)	Stack Temp (degF)	Gas Temp in	Gas Temp out	Meter (degF)	SQRT(dP)
1	12	0.17	2.98	124	103	76		0.4123
2	12	0.17	2.98	123	111	80		0.4123
3	12	0.16	2.8	124	122	92		0.4000
4	12	0.16	2.8	124	124	95		0.4000
5	12	0.17	2.98	125	127	101		0.4123
6	12	0.16	2.8	124	128	103		0.4000
7	12	0.17	2.98	124	130	105		0.4123
8	12	0.16	2.8	125	130	106		0.4000
1	12	0.17	2.98	124	132	105		0.4123
2	12	0.17	2.98	124	131	106		0.4123
3	12	0.16	2.8	124	132	107		0.4000
4	12	0.16	2.8	123	132	108		0.4000
5	12	0.16	2.8	124	132	108		0.4000
TOTALS	156	2.14	37.4800	1612.0	1634.0	1292.0		5.2739

FIELD DATA AVERAGES FOR SAMPLE # — E03151125PCB

Velocity Head	("wc)	dP(avg)	=	0.165
Orifice Meter Reading	("wc)	dH(avg)	=	2.883
Stack Temperature	(deg F)	T(s avg)	=	124.0
	(deg C)	T(s avg)	=	51.1
Meter Temperature	(deg F)	T(m avg)	=	112.5
	(deg C)	T(m avg)	=	44.7
Root-Mean-Square dP	("wc)	SQRT(dP)	=	0.406

ISOKINETIC RESULTS

Plant: IRF	Updated 3-28-91	Performed by:	ED HILL *E.H.H*
Date: 03-19-91	Printed 04/04/91	Test No./Type:	E03191000PCB
Sample Location: SCUBBER EXIT		Start/Stop Time:	1000-1300

PARAMETER	SYMBOL	VALUE (calc.)
Nozzle Diameter, Actual (in)	N(d)	0.365
Pitot Tube Correction Factor	C(p)	0.84
Gas Meter Correction Factor	(alpha)	1.01
Stack (Duct) Dimensions (in):		
Radius (if round)	R	7
Length (if rectangular)	L	——
Width (if rectangular)	W	——
Area of Stack (sq ft)	A(s)	(1.06901)
# of Sample Points	#	16
Total Sampling Time (min)	(theta)	(172.00)
Barometric Pressure (in Hg)	P(b)	30.09
Stack Pressure (in H2O)	P(stack)	-5
Gas Meter Initial Reading (cu ft)		520.021
Gas Meter Final Reading (cu ft)		665.623
Net Gas Sample Volume (cu ft)	V(m)	(145.60)
Vol of Liquid Collected (ml)	Vl(c)	631.68
Vol of Liq @ Std. Conds. (scf)	V(w std)	(29.733)
Wt. of Filter Particulate (gm)		0
Wt. of Probe Wash Particulate (gm)		0
Wt of Combined Particulate (gm)	M(p)	(0.0000)
O2 Concentration (by CEM)	%	7.8
CO2 Concentration (by CEM)	%	8.1
CO Concentration (by CEM)	%	0
N2 Concentration (by diff.)	%	(84.10)

CALCULATED RESULTS FOR SAMPLE # — E03191000PCB

Isokineticity		% I	=	1
Metered Sample Gas Volume	(scf)	V(m std)	=	136.97
	(scm)	V(m std)	=	3.879
Stack Gas Flow, std cond.	(dscfm)	Q(s)	=	1163
std cond.	(dscm/min)	Q(s)	=	32.9
actual	(acfm)	Q(a)	=	1603
actual	(acm/min)	Q(a)	=	45.4
Particulate Loading, dry	(gr/dscf)	C(s std)	=	0.0000
@ 7% O2	(gr/dscf)	C(s std)	=	0.0000
@ 7% O2	(mg/dscm)	C(s std)	=	0
Particulate Emission Rate	(lb/hr)	E(p)	=	0.000
	(kg/hr)	E(p)	=	0.000
Stack Gas Water Vapor Proportion		B(wo)	=	0.178
Molecular Weight of Stack Gas, Dry		M(d)	=	29.61
Wet		M(s)	=	27.54
Stack Pressure, absolute (in Hg)		P(s)	=	29.72
Average Stack Velocity (ft/sec)		V(s avg)	=	25.0

Sample Point	dClock Time (min)	Velocity Head, dP (in H2O)	Orifice Meter, dH (in H2O)	Stack Temp (degF)	Gas Temp in	Gas Temp out	Meter (degF)	SQRT(dP)
1	11	0.17	2.72	134	95	74		0.4123
2	11	0.17	2.72	133	111	79		0.4123
3	11	0.16	2.56	134	123	89		0.4000
4	11	0.17	2.72	134	127	94		0.4123
5	11	0.16	2.56	134	127	98		0.4000
6	11	0.17	2.72	135	128	100		0.4123
7	11	0.17	2.72	134	130	103		0.4123
8	11	0.17	2.72	133	131	104		0.4123
1	11	0.16	2.56	135	132	104		0.4000
2	11	0.17	2.72	134	133	106		0.4123
3	11	0.16	2.56	134	133	107		0.4000
4	11	0.16	2.56	134	132	107		0.4000
5	11	0.17	2.72	134	133	107		0.4123
6	11	0.17	2.72	134	134	108		0.4123
7	11	0.17	2.72	133	134	109		0.4123
8	7	0.17	2.72	134	134	109		0.4123
TOTALS	172	2.67	42.7200	2143.0	2037.0	1598.0		6.5354

FIELD DATA AVERAGES FOR SAMPLE # — E03191000PCB

Velocity Head	("wc)	dP(avg)	=	0.167
Orifice Meter Reading	("wc)	dH(avg)	=	2.670
Stack Temperature	(deg F)	T(s avg)	=	133.9
	(deg C)	T(s avg)	=	56.6
Meter Temperature	(deg F)	T(m avg)	=	113.6
	(deg C)	T(m avg)	=	45.3
Root-Mean-Square dP	("wc)	SQRT(dP)	=	0.408

ISOKINETIC RESULTS

Plant: IRF Updated 03-28-91 Performed by: ED HILL *EHill*
Date: 03-21-91 Printed 04/04/91 Test No./Type: E03211340PCB
Sample Location: SCUBBER EXIT Start/Stop Time: 1340-1632

PARAMETER	SYMBOL	VALUE (calc.)
Nozzle Diameter, Actual (in)	N(d)	0.365
Pitot Tube Correction Factor	C(p)	0.84
Gas Meter Correction Factor	(alpha)	1.01
Stack (Duct) Dimensions (in):		
Radius (if round)	R	7
Length (if rectangular)	L	----
Width (if rectangular)	W	----
Area of Stack (sq ft)	A(s)	(1.06901)
# of Sample Points	#	15
Total Sampling Time (min)	(theta)	(165.00)
Barometric Pressure (in Hg)	P(b)	29.88
Stack Pressure (in H2O)	P(stack)	-5
Gas Meter Initial Reading (cu ft)		667.116
Gas Meter Final Reading (cu ft)		801.371
Net Gas Sample Volume (cu ft)	V(m)	(134.26)
Vol of Liquid Collected (ml)	Vl(c)	953.13
Vol of Liq @ Std. Conds. (scf)	V(w std)	(44.864)
Wt. of Filter Particulate (gm)		0
Wt. of Probe Wash Particulate (gm)		0
Wt of Combined Particulate (gm)	M(p)	(0.0000)
O2 Concentration (by CEM)	%	8.33
CO2 Concentration (by CEM)	%	7.62
CO Concentration (by CEM)	%	0
N2 Concentration (by diff.)	%	(84.05)

CALCULATED RESULTS FOR SAMPLE # --- E03211340PCB

Isokineticity		% I	=	102.2
Metered Sample Gas Volume	(scf)	V(m std)	=	123.80
	(scm)	V(m std)	=	3.506
Stack Gas Flow, std cond.	(dscfm)	Q(s)	=	1080
std cond.	(dscm/min)	Q(s)	=	30.6
actual	(acfm)	Q(a)	=	1697
actual	(acm/min)	Q(a)	=	48.0
Particulate Loading, dry	(gr/dscf)	C(s std)	=	0.0000
@ 7% O2	(gr/dscf)	C(s std)	=	0.0000
@ 7% O2	(mg/dscm)	C(s std)	=	0
Particulate Emission Rate	(lb/hr)	E(p)	=	0.000
	(kg/hr)	E(p)	=	0.000
Stack Gas Water Vapor Proportion		B(wo)	=	0.266
Molecular Weight of Stack Gas, Dry		M(d)	=	29.55
Wet		M(s)	=	26.48
Stack Pressure, absolute (in Hg)		P(s)	=	29.51
Average Stack Velocity (ft/sec)		V(s avg)	=	26.5

Sample Point	dClock Time (min)	Velocity Head, dP (in H2O)	Orifice Meter, dH (in H2O)	Stack Temp (degF)	Gas Temp in	Gas Temp out	Meter (degF)	SQRT(dP)
1	11	0.18	2.88	140	91	88	88	0.4243
2	11	0.17	2.72	140	123	92	92	0.4123
3	11	0.18	2.88	141	132	99	99	0.4243
4	11	0.18	2.88	141	136	105	105	0.4243
5	11	0.17	2.72	140	138	110	110	0.4123
6	11	0.18	2.88	140	140	113	113	0.4243
7	11	0.18	2.88	140	140	114	114	0.4243
8	11	0.18	2.88	140	140	116	116	0.4243
1	11	0.17	2.72	140	142	115	115	0.4123
2	11	0.18	2.88	141	141	115	115	0.4243
3	11	0.18	2.88	141	137	117	117	0.4243
4	11	0.18	2.88	140	134	115	115	0.4243
5	11	0.17	2.72	140	135	116	116	0.4123
6	11	0.18	2.88	140	134	115	115	0.4243
7	11	0.17	2.72	140	132	115	115	0.4123
0	0	0	0	0	0	0	0	0.0000
---	---	---	---	---	---	---	---	---
---	---	---	---	---	---	---	---	---
---	---	---	---	---	---	---	0	---
TOTALS	165	2.65	42.4000	2104.0	1995.0	1645.0	1645.0	6.3042

FIELD DATA AVERAGES FOR SAMPLE # -- E03211340PCB

Velocity Head	("wc)	dP(avg)	=	0.177
Orifice Meter Reading	("wc)	dH(avg)	=	2.827
Stack Temperature	(deg F)	T(s avg)	=	140.3
	(deg C)	T(s avg)	=	60.1
Meter Temperature	(deg F)	T(m avg)	=	121.3
	(deg C)	T(m avg)	=	49.6
Root-Mean-Square dP	("wc)	SQRT(dP)	=	0.420

ISOKINETIC RESULTS

Plant: IRF Updated 3-28-91 Performed by: ED HILL EH/

Date: :03-15-91 Printed 04/04/91 Test No./Type: E03151125MMSDIOX

Sample Location: SCUBBER EXIT Start/Stop Time: 1125-1408

PARAMETER	SYMBOL	VALUE (calc.)
Nozzle Diameter, Actual (in)	N(d)	0.368
Pitot Tube Correction Factor	C(p)	0.84
Gas Meter Correction Factor	(alpha)	1
Stack (Duct) Dimensions (in):		
Radius (if round)	R	7
Length (if rectangular)	L	——
Width (if rectangular)	W	——
Area of Stack (sq ft)	A(s)	(1.06901)
# of Sample Points	#	10
Total Sampling Time (min)	(theta)	(156.00)
Barometric Pressure (in Hg)	P(b)	30.19
Stack Pressure (in H2O)	P(stack)	-5
Gas Meter Initial Reading (cu ft)		445.979
Gas Meter Final Reading (cu ft)		586.495
Net Gas Sample Volume (cu ft)	V(m)	(140.52)
Vol of Liquid Collected (ml)	Vl(c)	490.65
Vol of Liq @ Std. Conds. (scf)	V(w std)	(23.095)
Wt. of Filter Particulate (gm)		0
Wt. of Probe Wash Particulate (gm)		0
Wt of Combined Particulate (gm)	M(p)	(0.0000)
O2 Concentration (by OEM)	%	8.4
CO2 Concentration (by OEM)	%	7.4
CO Concentration (by OEM)	%	0
N2 Concentration (by diff.)	%	(83.86)

CALCULATED RESULTS FOR SAMPLE # — E03151125MMSDIOX

Isokineticity		% I	=	100.07
Metered Sample Gas Volume	(scf)	V(m std)	=	131.62
	(scm)	V(m std)	=	3.727
Stack Gas Flow, std cond.	(dscfm)	Q(s)	=	1202
std cond.	(dscm/min)	Q(s)	=	34.0
actual	(acfm)	Q(a)	=	1567
actual	(acm/min)	Q(a)	=	44.4
Particulate Loading, dry	(gr/dscf)	C(s std)	=	0.0000
@ 7% O2	(gr/dscf)	C(s std)	=	0.0000
@ 7% O2	(mg/dscm)	C(s std)	=	0
Particulate Emission Rate	(lb/hr)	E(p)	=	0.000
	(kg/hr)	E(p)	=	0.000
Stack Gas Water Vapor Proportion		B(wo)	=	0.149
Molecular Weight of Stack Gas, Dry		M(d)	=	29.56
Wet		M(s)	=	27.33
Stack Pressure, absolute (in Hg)		P(s)	=	29.82
Average Stack Velocity (ft/sec)		V(s avg)	=	34.4

Sample Point	dClock Time (min)	Velocity Head, dP (in H2O)	Orifice Meter, dH (in H2O)	Stack Temp (degF)	Gas Temp in	Meter (degF) out	SQRT(dP)
1	12	0.17	2.98	124	103	76	0.4123
2	12	0.17	2.98	123	111	80	0.4123
3	12	0.16	2.8	124	122	92	0.4000
4	12	0.16	2.8	124	124	95	0.4000
5	12	0.17	2.98	125	127	101	0.4123
6	12	0.16	2.8	124	128	103	0.4000
7	12	0.17	2.98	124	130	105	0.4123
8	12	0.16	2.8	125	130	106	0.4000
1	12	0.17	2.98	124	132	105	0.4123
2	12	0.17	2.98	124	131	106	0.4123
3	12	0.16	2.8	124	132	107	0.4000
4	12	0.16	2.8	123	132	108	0.4000
5	12	0.16	2.8	124	132	108	0.4000
TOTALS	156	2.14	37.4800	1612.0	1634.0	1292.0	5.2739

FIELD DATA AVERAGES FOR SAMPLE # — E03151125MMSDIOX

Velocity Head	("wc)	dP(avg)	=	0.165
Orifice Meter Reading	("wc)	dH(avg)	=	2.983
Stack Temperature	(deg F)	T(s avg)	=	124.0
	(deg C)	T(s avg)	=	51.1
Meter Temperature	(deg F)	T(m avg)	=	112.5
	(deg C)	T(m avg)	=	44.7
Root-Mean-Square dP	("wc)	SQRT(dP)	=	0.406

ISOKINETIC RESULTS

Plant:	IRF	Updated 03-28-91	Performed by: ED HILL EHH
Date:	03-19-91	Printed 04/04/91	Test No./Type: E03191000DIO
Sample Location:	SCURBER EXIT		Start/Stop Time: 1000-1300

PARAMETER	SYMBOL	VALUE (calc.)
Nozzle Diameter, Actual (in)	N(d)	0.368
Pitot Tube Correction Factor	C(p)	0.84
Gas Meter Correction Factor	(alpha)	1
Stack (Duct) Dimensions (in):		
Radius (if round)	R	7
Length (if rectangular)	L	——
Width (if rectangular)	W	——
Area of Stack (sq ft)	A(s)	(1.06901)
# of Sample Points	#	16
Total Sampling Time (min)	(theta)	(172.00)
Barometric Pressure (in Hg)	P(b)	30.09
Stack Pressure (in H2O)	P(stack)	-5
Gas Meter Initial Reading (cu ft)		586.759
Gas Meter Final Reading (cu ft)		738.668
Net Gas Sample Volume (cu ft)	V(m)	(151.91)
Vol of Liquid Collected (ml)	Vl(c)	576.9
Vol of Liq @ Std. Conds. (scf)	V(w std)	(27.155)
Wt. of Filter Particulate (gm)		0
Wt. of Probe Wash Particulate (gm)		0
Wt of Combined Particulate (gm)	M(p)	(0.0000)
O2 Concentration (by CEM)	%	7.8
CO2 Concentration (by CEM)	%	8.1
CO Concentration (by CEM)	%	0
N2 Concentration (by diff.)	%	(84.10)

CALCULATED RESULTS FOR SAMPLE # —— E03191000DIO

Isokineticity		% I	=	100.9
Metered Sample Gas Volume	(scf)	V(m std)	=	141.14
	(scm)	V(m std)	=	3.997
Stack Gas Flow, std cond.	(dscfm)	Q(s)	=	1178
std cond.	(dscm/min)	Q(s)	=	33.4
actual	(acfm)	Q(a)	=	1591
actual	(acm/min)	Q(a)	=	45.1
Particulate Loading, dry	(gr/dscf)	C(s std)	=	0.0000
@ 7% O2	(gr/dscf)	C(s std)	=	0.0000
@ 7% O2	(mg/dscm)	C(s std)	=	0
Particulate Emission Rate	(lb/hr)	E(p)	=	0.000
	(kg/hr)	E(p)	=	0.000
Stack Gas Water Vapor Proportion		B(wo)	=	0.161
Molecular Weight of Stack Gas, Dry		M(d)	=	29.61
Wet		M(s)	=	27.74
Stack Pressure, absolute (in Hg)		P(s)	=	29.72
Average Stack Velocity (ft/sec)		V(s avg)	=	24.8

Sample Point	dClock Time (min)	Velocity Head, dP (in H2O)	Orifice Meter, dH (in H2O)	Stack Temp (degF)	Gas Temp in	Meter (degF) out	SQRT(dP)
1	11	0.17	2.89	134	94	76	0.4123
2	11	0.17	2.89	133	107	80	0.4123
3	11	0.16	2.72	134	120	90	0.4000
4	11	0.16	2.72	134	125	97	0.4000
5	11	0.16	2.72	134	128	101	0.4000
6	11	0.17	2.89	135	131	104	0.4123
7	11	0.17	2.89	134	132	107	0.4123
8	11	0.17	2.89	133	132	108	0.4123
1	11	0.17	2.89	135	131	108	0.4123
2	11	0.16	2.72	134	134	110	0.4000
3	11	0.16	2.72	134	134	111	0.4000
4	11	0.17	2.89	134	133	111	0.4123
5	11	0.17	2.89	134	134	111	0.4123
6	11	0.16	2.72	134	134	112	0.4000
7	11	0.16	2.72	133	134	112	0.4000
8	7	0.17	2.89	134	134	112	0.4123
——	——	——	——	——	——	——	——
——	——	——	——	——	——	——	——
——	——	——	——	——	——	0	——
TOTALS	172	2.65	45.0500	2143.0	2037.0	1650.0	6.5108

FIELD DATA AVERAGES FOR SAMPLE # —— E03191000DIO

Velocity Head	("wc)	dP(avg)	=	0.166
Orifice Meter Reading	("wc)	dH(avg)	=	2.816
Stack Temperature	(deg F)	T(s avg)	=	133.9
	(deg C)	T(s avg)	=	56.6
Meter Temperature	(deg F)	T(m avg)	=	115.2
	(deg C)	T(m avg)	=	46.2
Root-Mean-Square dP	("wc)	SQRT(dP)	=	0.407

ISOKINETIC RESULTS

Plant: IRF	Updated 03-28-91	Performed by:	ED HILL EH.'11
Date: 03-21-91	Printed 04/04/91	Test No./Type:	E03211340DIO
Sample Location: SCUBBER EXIT		Start/Stop Time:	1340-1632

PARAMETER	SYMBOL	VALUE (calc.)
Nozzle Diameter, Actual (in)	N(d)	0.368
Pitot Tube Correction Factor	C(p)	0.84
Gas Meter Correction Factor	(alpha)	1
Stack (Duct) Dimensions (in):		
Radius (if round)	R	7
Length (if rectangular)	L	——
Width (if rectangular)	W	——
Area of Stack (sq ft)	A(s)	(1.06901)
# of Sample Points	#	15
Total Sampling Time (min)	(theta)	(165.00)
Barometric Pressure (in Hg)	P(b)	29.88
Stack Pressure (in H2O)	P(stack)	-5
Gas Meter Initial Reading (cu ft)		742.68
Gas Meter Final Reading (cu ft)		886.99
Net Gas Sample Volume (cu ft)	V(m)	(144.31)
Vol of Liquid Collected (ml)	Vl(c)	1005.12
Vol of Liq @ Std. Conds. (scf)	V(w std)	(47.311)
Wt. of Filter Particulate (gm)		0
Wt. of Probe Wash Particulate (gm)		0
Wt of Combined Particulate (gm)	M(p)	(0.0000)
O2 Concentration (by CEM)	%	8.33
CO2 Concentration (by CEM)	%	7.62
CO Concentration (by CEM)	%	0
N2 Concentration (by diff.)	%	(84.05)

CALCULATED RESULTS FOR SAMPLE # --- E03211340DIO

Isokineticity		% I	=	109[illegible]
Metered Sample Gas Volume	(scf)	V(m std)	=	130.99
	(scm)	V(m std)	=	3.709
Stack Gas Flow, std cond.	(dscfm)	Q(s)	=	1077
std cond.	(dscm/min)	Q(s)	=	30.5
actual	(acfm)	Q(a)	=	1690
actual	(acm/min)	Q(a)	=	47.9
Particulate Loading, dry	(gr/dscf)	C(s std)	=	0.0000
@ 7% O2	(gr/dscf)	C(s std)	=	0.0000
@ 7% O2	(mg/dscm)	C(s std)	=	0
Particulate Emission Rate	(lb/hr)	E(p)	=	0.000
	(kg/hr)	E(p)	=	0.000
Stack Gas Water Vapor Proportion		B(wo)	=	0.265
Molecular Weight of Stack Gas, Dry		M(d)	=	29.55
Wet		M(s)	=	26.49
Stack Pressure, absolute (in Hg)		P(s)	=	29.51
Average Stack Velocity (ft/sec)		V(s avg)	=	26.3

Sample Point	dClock Time (min)	Velocity Head, dP (in H2O)	Orifice Meter, dH (in H2O)	Stack Temp (degF)	Gas Temp in	Meter (degF) out	SQRT(dP)
1	11	0.18	3.06	140	102	90	0.4243
2	11	0.17	2.89	140	122	93	0.4123
3	11	0.18	3.06	141	133	102	0.4243
4	11	0.18	3.06	141	138	109	0.4243
5	11	0.17	2.89	140	134	114	0.4123
6	11	0.17	2.89	140	131	116	0.4123
7	11	0.17	2.89	140	129	117	0.4123
8	11	0.18	3.06	140	135	119	0.4243
1	11	0.18	3.06	140	144	121	0.4243
2	11	0.18	3.06	141	149	123	0.4243
3	11	0.18	3.06	141	148	124	0.4243
4	11	0.18	3.06	140	147	122	0.4243
5	11	0.17	2.89	140	143	121	0.4123
6	11	0.17	2.89	140	142	120	0.4123
7	11	0.17	2.89	140	141	119	0.4123
0	0	0	0	0	0	0	0.0000
——	——	0	——	——	——	——	0.0000
——	——	——	——	——	——	——	——
——	——	——	——	——	——	0	——
TOTALS	165	2.63	44.7100	2104.0	2038.0	1710.0	6.2803

FIELD DATA AVERAGES FOR SAMPLE # — E03211340DIO

Velocity Head	("wc)	dP(avg)	=	0.175
Orifice Meter Reading	("wc)	dH(avg)	=	2.981
Stack Temperature	(deg F)	T(s avg)	=	140.3
	(deg C)	T(s avg)	=	60.1
Meter Temperature	(deg F)	T(m avg)	=	124.9
	(deg C)	T(m avg)	=	51.6
Root-Mean-Square dP	("wc)	SQRT(dP)	=	0.419

ISOKINETIC RESULTS

Plant: IEF	Updated 3-28-91	Performed by:	ED HILL EH/W
Date: 03-15-91	Printed 04/04/91	Test No./Type:	E03151125METALS
Sample Location: SCUBBER EXIT		Start/Stop Time:	1125-1408

PARAMETER	SYMBOL	VALUE (calc.)
Nozzle Diameter, Actual (in)	N(d)	0.359
Pitot Tube Correction Factor	C(p)	0.84
Gas Meter Correction Factor	(alpha)	1.02
Stack (Duct) Dimensions (in):		
Radius (if round)	R	7
Length (if rectangular)	L	---
Width (if rectangular)	W	---
Area of Stack (sq ft)	A(s)	(1.06901)
# of Sample Points	#	13
Total Sampling Time (min)	(theta)	(156.00)
Barometric Pressure (in Hg)	P(b)	30.19
Stack Pressure (in H2O)	P(stack)	-5
Gas Meter Initial Reading (cu ft)		408.518
Gas Meter Final Reading (cu ft)		530.725
Net Gas Sample Volume (cu ft)	V(m)	(122.21)
Vol of Liquid Collected (ml)	Vl(c)	382.65
Vol of Liq @ Std. Conds. (scf)	V(w std)	(18.011)
Wt. of Filter Particulate (gm)		0
Wt. of Probe Wash Particulate (gm)		0
Wt of Combined Particulate (gm)	M(p)	(0.0000)
O2 Concentration (by CEM)	%	8.6
CO2 Concentration (by CEM)	%	7.6
CO Concentration (by CEM)	%	0
N2 Concentration (by diff.)	%	(83.80)

CALCULATED RESULTS FOR SAMPLE # — E03151125METALS

Isokineticity		% I	=	92.5
Metered Sample Gas Volume	(scf)	V(m std)	=	115.60
	(scm)	V(m std)	=	3.274
Stack Gas Flow, std cond.	(dscfm)	Q(s)	=	1220
std cond.	(dscm/min)	Q(s)	=	34.5
actual	(acfm)	Q(a)	=	1564
actual	(acm/min)	Q(a)	=	44.3
Particulate Loading, dry	(gr/dscf)	C(s std)	=	0.0000
@ 7% O2	(gr/dscf)	C(s std)	=	0.0000
@ 7% O2	(mg/dscm)	C(s std)	=	0
Particulate Emission Rate	(lb/hr)	E(p)	=	0.000
	(kg/hr)	E(p)	=	0.000
Stack Gas Water Vapor Proportion		B(wo)	=	0.135
Molecular Weight of Stack Gas, Dry		M(d)	=	29.56
Wet		M(s)	=	28.00
Stack Pressure, absolute (in Hg)		P(s)	=	29.82
Average Stack Velocity (ft/sec)		V(s avg)	=	24.4

Sample Point	dClock Time (min)	Velocity Head, dP (in H2O)	Orifice Meter,dH (in H2O)	Stack Temp (degF)	Gas Temp in	Gas Temp out	Meter (degF)	SQRT(dP)
1	12	0.17	2.72	124	112	78		0.4123
2	12	0.17	2.72	123	123	84		0.4123
3	12	0.16	2.56	124	130	92		0.4000
4	12	0.16	2.56	124	131	96		0.4000
5	12	0.16	2.56	125	135	103		0.4000
6	12	0.17	2.72	124	136	106		0.4123
7	12	0.17	2.72	124	137	107		0.4123
8	12	0.16	2.56	125	136	109		0.4000
1	12	0.17	2.72	124	138	108		0.4123
2	12	0.17	2.72	124	141	110		0.4123
3	12	0.165	2.64	124	138	112		0.4062
4	12	0.16	2.56	123	138	112		0.4000
5	12	0.16	2.56	124	141	113		0.4000
TOTALS	156	2.15	34.3200	1612.0	1736.0	1330.0		5.2801

FIELD DATA AVERAGES FOR SAMPLE # — E03151125METALS

Velocity Head	("wc)	dP(avg)	=	0.165
Orifice Meter Reading	("wc)	dH(avg)	=	2.640
Stack Temperature	(deg F)	T(s avg)	=	124.0
	(deg C)	T(s avg)	=	51.1
Meter Temperature	(deg F)	T(m avg)	=	117.9
	(deg C)	T(m avg)	=	47.7
Root-Mean-Square dP	("wc)	SQRT(dP)	=	0.406

ISOKINETIC RESULTS

Plant: IRF	Updated 03-25-91	Performed by:	ED HILL EH.11
Date: 03-19-91	Printed 04/04/91	Test No./Type:	E03191000MET
Sample Location: SCUBBER EXIT		Start/Stop Time:	1000-1300

PARAMETER	SYMBOL	VALUE (calc.)
Nozzle Diameter, Actual (in)	N(d)	0.359
Pitot Tube Correction Factor	C(p)	0.84
Gas Meter Correction Factor	(alpha)	1.02
Stack (Duct) Dimensions (in):		
Radius (if round)	R	7
Length (if rectangular)	L	——
Width (if rectangular)	W	——
Area of Stack (sq ft)	A(s)	(1.06901)
# of Sample Points	#	16
Total Sampling Time (min)	(theta)	(172.00)
Barometric Pressure (in Hg)	P(b)	30.09
Stack Pressure (in H2O)	P(stack)	-5
Gas Meter Initial Reading (cu ft)		531.742
Gas Meter Final Reading (cu ft)		665.45
Net Gas Sample Volume (cu ft)	V(m)	(133.71)
Vol of Liquid Collected (ml)	Vl(c)	494.38
Vol of Liq @ Std. Conds. (scf)	V(w std)	(23.270)
Wt. of Filter Particulate (gm)		0
Wt. of Probe Wash Particulate (gm)		0
Wt of Combined Particulate (gm)	M(p)	(0.0000)
O2 Concentration (by CEM)	%	7.8
CO2 Concentration (by CEM)	%	8.1
CO Concentration (by CEM)	%	0
N2 Concentration (by diff.)	%	(84.10)

CALCULATED RESULTS FOR SAMPLE # — E03191000MET

Isokineticity		% I	=	9
Metered Sample Gas Volume	(scf)	V(m std)	=	126.00
	(scm)	V(m std)	=	3.569
Stack Gas Flow, std cond.	(dscfm)	Q(s)	=	1189
std cond.	(dscm/min)	Q(s)	=	33.7
actual	(acfm)	Q(a)	=	1595
actual	(acm/min)	Q(a)	=	45.2
Particulate Loading, dry	(gr/dscf)	C(s std)	=	0.0000
@ 7% O2	(gr/dscf)	C(s std)	=	0.0000
@ 7% O2	(mg/dscm)	C(s std)	=	0
Particulate Emission Rate	(lb/hr)	E(p)	=	0.000
	(kg/hr)	E(p)	=	0.000
Stack Gas Water Vapor Proportion		B(wo)	=	0.156
Molecular Weight of Stack Gas, Dry		M(d)	=	29.61
Wet		M(s)	=	27.80
Stack Pressure, absolute (in Hg)		P(s)	=	29.72
Average Stack Velocity (ft/sec)		V(s avg)	=	24.9

Sample Point	dClock Time (min)	Velocity Head, dP (in H2O)	Orifice Meter, dH (in H2O)	Stack Temp (degF)	Gas Temp in	Meter (degF) out	SQRT(dP)
1	11	0.17	2.38	134	99	75	0.4123
2	11	0.17	2.38	133	111	78	0.4123
3	11	0.17	2.38	134	129	85	0.4123
4	11	0.16	2.24	134	134	92	0.4000
5	11	0.16	2.24	134	137	97	0.4000
6	11	0.17	2.38	135	138	100	0.4123
7	11	0.17	2.38	134	140	102	0.4123
8	11	0.17	2.38	133	141	104	0.4123
1	11	0.16	2.24	135	142	104	0.4000
2	11	0.17	2.38	134	142	106	0.4123
3	11	0.17	2.38	134	143	106	0.4123
4	11	0.17	2.38	134	143	107	0.4123
5	11	0.16	2.24	134	144	108	0.4000
6	11	0.16	2.24	134	144	108	0.4000
7	11	0.17	2.38	133	144	109	0.4123
8	7	0.17	2.38	134	145	109	0.4123
TOTALS	172	2.67	37.3800	2143.0	2176.0	1590.0	6.5354

FIELD DATA AVERAGES FOR SAMPLE # — E03191000MET

Velocity Head	("wc)	dP(avg)	=	0.167
Orifice Meter Reading	("wc)	dH(avg)	=	2.336
Stack Temperature	(deg F)	T(s avg)	=	133.9
	(deg C)	T(s avg)	=	56.6
Meter Temperature	(deg F)	T(m avg)	=	117.7
	(deg C)	T(m avg)	=	47.6
Root-Mean-Square dP	("wc)	SQRT(dP)	=	0.408

ISOKINETIC RESULTS

Plant: IRF Updated 03-29-91 Performed by: ED HILL E H. 11
Date: 03-21-91 Printed 04/04/91 Test No./Type: E03211340MET
Sample Location: SCUBBER EXIT Start/Stop Time: 1340-1632

PARAMETER	SYMBOL	VALUE (calc.)
Nozzle Diameter, Actual (in)	N(d)	0.359
Pitot Tube Correction Factor	C(p)	0.84
Gas Meter Correction Factor	(alpha)	1.02
Stack (Duct) Dimensions (in):		
Radius (if round)	R	7
Length (if rectangular)	L	——
Width (if rectangular)	W	——
Area of Stack (sq ft)	A(s)	(1.06901)
# of Sample Points	#	15
Total Sampling Time (min)	(theta)	(165.00)
Barometric Pressure (in Hg)	P(b)	29.89
Stack Pressure (in H2O)	P(stack)	-5
Gas Meter Initial Reading (cu ft)		665.706
Gas Meter Final Reading (cu ft)		795.138
Net Gas Sample Volume (cu ft)	V(m)	(129.43)
Vol of Liquid Collected (ml)	Vl(c)	890.98
Vol of Liq @ Std. Conds. (scf)	V(w std)	(41.938)
Wt. of Filter Particulate (gm)		0
Wt. of Probe Wash Particulate (gm)		0
Wt of Combined Particulate (gm)	M(p)	(0.0000)
O2 Concentration (by CEM)	%	8.33
CO2 Concentration (by CEM)	%	7.62
CO Concentration (by CEM)	%	0
N2 Concentration (by diff.)	%	(84.05)

CALCULATED RESULTS FOR SAMPLE # --- E03211340MET

Isokineticity		% I	=	101.6
Metered Sample Gas Volume	(scf)	V(m std)	=	119.34
	(scm)	V(m std)	=	3.379
Stack Gas Flow, std cond.	(dscfm)	Q(s)	=	1084
std cond.	(dscm/min)	Q(s)	=	30.7
actual	(acfm)	Q(a)	=	1638
actual	(acm/min)	Q(a)	=	47.8
Particulate Loading, dry	(gr/dscf)	C(s std)	=	0.0000
@ 7% O2	(gr/dscf)	C(s std)	=	0.0000
@ 7% O2	(mg/dscm)	C(s std)	=	0
Particulate Emission Rate	(lb/hr)	E(p)	=	0.000
	(kg/hr)	E(p)	=	0.000
Stack Gas Water Vapor Proportion		B(wo)	=	0.260
Molecular Weight of Stack Gas, Dry		M(d)	=	29.55
Wet		M(s)	=	26.55
Stack Pressure, absolute (in Hg)		P(s)	=	29.51
Average Stack Velocity (ft/sec)		V(s avg)	=	26.3

Sample Point	dClock Time (min)	Velocity Head, dP (in H2O)	Orifice Meter, dH (in H2O)	Stack Temp (degF)	Gas Temp in	Gas Temp out	Meter (degF)	SQRT(dP)
1	11	0.18	2.52	140	100	89		0.4243
2	11	0.18	2.52	140	120	92		0.4243
3	11	0.17	2.38	141	132	98		0.4123
4	11	0.18	2.52	141	141	104		0.4243
5	11	0.18	2.52	140	146	110		0.4243
6	11	0.17	2.38	140	148	113		0.4123
7	11	0.17	2.38	140	149	115		0.4123
8	11	0.18	2.52	140	155	117		0.4243
1	11	0.18	2.52	140	152	117		0.4243
2	11	0.18	2.52	141	154	118		0.4243
3	11	0.18	2.52	141	155	118		0.4243
4	11	0.17	2.38	140	145	119		0.4123
5	11	0.17	2.38	140	144	120		0.4123
6	11	0.17	2.38	140	143	121		0.4123
7	11	0.17	2.38	140	143	121		0.4123
0	0	0	0	0	0	0		0.0000
——	——	0	——	——	——	——		0.0000
——	——	——	——	——	——	——		——
——	——	——	——	——	——	——	0	——
TOTALS	165	2.63	36.8200	2104.0	2127.0	1672.0		6.2803

FIELD DATA AVERAGES FOR SAMPLE # -- E03211340MET

Velocity Head	("wc)	dP(avg)	=	0.175
Orifice Meter Reading	("wc)	dH(avg)	=	2.455
Stack Temperature	(deg F)	T(s avg)	=	140.3
	(deg C)	T(s avg)	=	60.1
Meter Temperature	(deg F)	T(m avg)	=	126.6
	(deg C)	T(m avg)	=	52.6
Root-Mean-Square dP	("wc)	SQRT(dP)	=	0.419

ISOKINETIC RESULTS

Plant: IRF Updated 3-15-91 Performed by: C.KING CKING
Date: 3-15-91 Printed 03/31/91 Test No./Type: E03151132M5
Sample Location: SCRUBBER EXIT Start/Stop Time: 1132-1300

PARAMETER	SYMBOL	VALUE (calc.)
Nozzle Diameter, Actual (in)	N(d)	0.375
Pitot Tube Correction Factor	C(p)	0.84
Gas Meter Correction Factor	(alpha)	0.98
Stack (Duct) Dimensions (in):		
Radius (if round)	R	7
Length (if rectangular)	L	----
Width (if rectangular)	W	----
Area of Stack (sq ft)	A(s)	(1.06901)
# of Sample Points	#	16
Total Sampling Time (min)	(theta)	(80.00)
Barometric Pressure (in Hg)	P(b)	30.19
Stack Pressure (in H2O)	P(stack)	-5
Gas Meter Initial Reading (cu ft)		129.712
Gas Meter Final Reading (cu ft)		205.112
Net Gas Sample Volume (cu ft)	V(m)	(75.40)
Vol of Liquid Collected (ml)	Vl(c)	122.65
Vol of Liq @ Std. Conds. (scf)	V(w std)	(5.773)
Wt. of Filter Particulate (gm)		0.1221
Wt. of Probe Wash Particulate (gm)		0
Wt of Combined Particulate (gm)	M(p)	(0.1221)
O2 Concentration (by CEM)	%	8.6
CO2 Concentration (by CEM)	%	7.6
CO Concentration (by CEM)	%	0
N2 Concentration (by diff.)	%	(83.80)

CALCULATED RESULTS FOR SAMPLE # --- E03151132M5

Isokineticity		% I	=	92
Metered Sample Gas Volume	(scf)	V(m std)	=	69.1[illegible]
	(scm)	V(m std)	=	1.959
Stack Gas Flow, std cond.	(dscfm)	Q(s)	=	1301
std cond.	(dscm/min)	Q(s)	=	36.8
actual	(acfm)	Q(a)	=	1563
actual	(acm/min)	Q(a)	=	44.3
Particulate Loading, dry	(gr/dscf)	C(s std)	=	0.0272
@ 7% O2	(gr/dscf)	C(s std)	=	0.0308
@ 7% O2	(mg/dscm)	C(s std)	=	70
Particulate Emission Rate	(lb/hr)	E(p)	=	0.304
	(kg/hr)	E(p)	=	0.138
Stack Gas Water Vapor Proportion		B(wo)	=	0.077
Molecular Weight of Stack Gas, Dry		M(d)	=	29.56
Wet		M(s)	=	28.67
Stack Pressure, absolute (in Hg)		P(s)	=	29.82
Average Stack Velocity (ft/sec)		V(s avg)	=	24.4

Sample Point	dClock Time (min)	Velocity Head, dP (in H2O)	Orifice Meter, dH (in H2O)	Stack Temp (degF)	Gas Temp in	Meter (degF) out	SQRT(dP)
1	5	0.16	2.8	123	105	82	0.4000
2	5	0.17	2.9	123	107	84	0.4123
3	5	0.17	2.9	123	111	85	0.4123
4	5	0.17	2.9	124	112	88	0.4123
5	5	0.17	2.9	124	121	91	0.4123
6	5	0.17	2.9	125	122	93	0.4123
7	5	0.17	2.9	124	123	93	0.4123
8	5	0.17	2.9	125	125	92	0.4123
1	5	0.16	2.8	124	125	103	0.4000
2	5	0.16	2.8	124	131	108	0.4000
3	5	0.17	2.9	124	137	112	0.4123
4	5	0.18	2.9	123	139	115	0.4243
5	5	0.17	2.9	123	138	114	0.4123
6	5	0.17	2.9	123	138	113	0.4123
7	5	0.17	2.9	123	139	114	0.4123
8	5	0.17	2.9	123	139	114	0.4123
TOTALS	80	2.70	46.1000	1978.0	2012.0	1601.0	6.5720

FIELD DATA AVERAGES FOR SAMPLE # -- E03151132M5

Velocity Head	("wc)	dP(avg)	=	0.169
Orifice Meter Reading	("wc)	dH(avg)	=	2.881
Stack Temperature	(deg F)	T(s avg)	=	123.6
	(deg C)	T(s avg)	=	50.9
Meter Temperature	(deg F)	T(m avg)	=	112.9
	(deg C)	T(m avg)	=	44.9
Root-Mean-Square dP	("wc)	SQRT(dP)	=	0.411

ISOKINETIC RESULTS

Plant: IRF Updated 3-15-91 Performed by: C.KING CKING
Date: 3-19-91 Printed 03/31/91 Test No./Type: E03191051M5
Sample Location: SCRUBBER EXIT Start/Stop Time: 1051-1220

PARAMETER	SYMBOL	VALUE (calc.)
Nozzle Diameter, Actual (in)	N(d)	0.375
Pitot Tube Correction Factor	C(p)	0.84
Gas Meter Correction Factor	(alpha)	0.98
Stack (Duct) Dimensions (in):		
Radius (if round)	R	7
Length (if rectangular)	L	----
Width (if rectangular)	W	----
Area of Stack (sq ft)	A(s)	(1.06901)
# of Sample Points	#	16
Total Sampling Time (min)	(theta)	(80.00)
Barometric Pressure (in Hg)	P(b)	30.09
Stack Pressure (in H2O)	P(stack)	-5
Gas Meter Initial Reading (cu ft)		205.901
Gas Meter Final Reading (cu ft)		281.187
Net Gas Sample Volume (cu ft)	V(m)	(75.29)
Vol of Liquid Collected (ml)	Vl(c)	284.77
Vol of Liq @ Std. Conds. (scf)	V(w std)	(13.404)
Wt. of Filter Particulate (gm)		0.1407
Wt. of Probe Wash Particulate (gm)		0.01
Wt of Combined Particulate (gm)	M(p)	(0.1507)
O2 Concentration (by CEM)	%	7.8
CO2 Concentration (by CEM)	%	8.1
CO Concentration (by CEM)	%	0
N2 Concentration (by diff.)	%	(84.10)

CALCULATED RESULTS FOR SAMPLE # --- E03191051M5

Isokineticity		% I	=	101.4
Metered Sample Gas Volume	(scf)	V(m std)	=	68.87
	(scm)	V(m std)	=	1.950
Stack Gas Flow, std cond.	(dscfm)	Q(s)	=	1185
std cond.	(dscm/min)	Q(s)	=	33.5
actual	(acfm)	Q(a)	=	1598
actual	(acm/min)	Q(a)	=	45.3
Particulate Loading, dry	(gr/dscf)	C(s std)	=	0.0338
@ 7% O2	(gr/dscf)	C(s std)	=	0.0358
@ 7% O2	(mg/dscm)	C(s std)	=	82
Particulate Emission Rate	(lb/hr)	E(p)	=	0.343
	(kg/hr)	E(p)	=	0.155
Stack Gas Water Vapor Proportion		B(wo)	=	0.163
Molecular Weight of Stack Gas, Dry		M(d)	=	29.61
Wet		M(s)	=	27.72
Stack Pressure, absolute (in Hg)		P(s)	=	29.72
Average Stack Velocity (ft/sec)		V(s avg)	=	24.9

Sample Point	dClock Time (min)	Velocity Head, dP (in H2O)	Orifice Meter, dH (in H2O)	Stack Temp (degF)	Gas Temp in	Meter (degF) out	SQRT(dP)
1	5	0.17	2.9	134	106	83	0.4123
2	5	0.16	2.8	133	118	88	0.4000
3	5	0.17	2.9	133	123	91	0.4123
4	5	0.17	2.9	135	123	92	0.4123
5	5	0.18	3	132	124	94	0.4243
6	5	0.17	2.9	132	125	96	0.4123
7	5	0.17	2.9	131	126	95	0.4123
8	5	0.16	2.8	132	126	99	0.4000
1	5	0.16	2.8	132	119	98	0.4000
2	5	0.16	2.8	131	123	100	0.4000
3	5	0.16	2.8	131	133	106	0.4000
4	5	0.17	2.9	131	133	108	0.4123
5	5	0.17	2.9	132	135	109	0.4123
6	5	0.17	2.9	132	133	109	0.4123
7	5	0.17	2.9	133	135	110	0.4123
8	5	0.17	2.9	133	135	110	0.4123
TOTALS	80	2.68	46.0000	2117.0	2017.0	1588.0	6.5474

FIELD DATA AVERAGES FOR SAMPLE # -- E03191051M5

Velocity Head	("wc)	dP(avg)	=	0.168
Orifice Meter Reading	("wc)	dH(avg)	=	2.875
Stack Temperature	(deg F)	T(s avg)	=	132.3
	(deg C)	T(s avg)	=	55.7
Meter Temperature	(deg F)	T(m avg)	=	112.7
	(deg C)	T(m avg)	=	44.8
Root-Mean-Square dP	("wc)	SQRT(dP)	=	0.409

ISOKINETIC RESULTS

Plant:	IRF	Updated	3-29-91	Performed by:	C.KING CKING
Date:	3-21-91	Printed	03/31/91	Test No./Type:	E03211405M5
Sample Location:	Scrubber exit			Start/Stop Time:	1405-1536

PARAMETER	SYMBOL	VALUE (calc.)
Nozzle Diameter, Actual (in)	N(d)	0.375
Pitot Tube Correction Factor	C(p)	0.84
Gas Meter Correction Factor	(alpha)	0.98
Stack (Duct) Dimensions (in):		
Radius (if round)	R	7
Length (if rectangular)	L	----
Width (if rectangular)	W	----
Area of Stack (sq ft)	A(s)	(1.06901)
# of Sample Points	#	16
Total Sampling Time (min)	(theta)	(80.00)
Barometric Pressure (in Hg)	P(b)	29.88
Stack Pressure (in H2O)	P(stack)	-5
Gas Meter Initial Reading (cu ft)		281.935
Gas Meter Final Reading (cu ft)		352.855
Net Gas Sample Volume (cu ft)	V(m)	(70.92)
Vol of Liquid Collected (ml)	VI(c)	487.86
Vol of Liq @ Std. Conds. (scf)	V(w std)	(22.964)
Wt. of Filter Particulate (gm)		0.1569
Wt. of Probe Wash Particulate (gm)		0.01
Wt of Combined Particulate (gm)	M(p)	(0.1669)
O2 Concentration (by CEM)	%	8.15
CO2 Concentration (by CEM)	%	7.58
CO Concentration (by CEM)	%	0
N2 Concentration (by diff.)	%	(84.27)

CALCULATED RESULTS FOR SAMPLE # --- E03211405M5

Isokineticity		% I	=	10[illegible]
Metered Sample Gas Volume	(scf)	V(m std)	=	63[illegible]
	(scm)	V(m std)	=	1.795
Stack Gas Flow, std cond.	(dscfm)	Q(s)	=	1081
std cond.	(dscm/min)	Q(s)	=	30.6
actual	(acfm)	Q(a)	=	1699
actual	(acm/min)	Q(a)	=	48.1
Particulate Loading, dry	(gr/dscf)	C(s std)	=	0.0406
@ 7% O2	(gr/dscf)	C(s std)	=	0.0443
@ 7% O2	(mg/dscm)	C(s std)	=	101
Particulate Emission Rate	(lb/hr)	E(p)	=	0.376
	(kg/hr)	E(p)	=	0.171
Stack Gas Water Vapor Proportion		B(wo)	=	0.266
Molecular Weight of Stack Gas, Dry		M(d)	=	29.54
Wet		M(s)	=	26.47
Stack Pressure, absolute (in Hg)		P(s)	=	29.51
Average Stack Velocity (ft/sec)		V(s avg)	=	26.5

Sample Point	dClock Time (min)	Velocity Head, dP (in H2O)	Orifice Meter, dH (in H2O)	Stack Temp (degF)	Gas Temp in	Gas Temp out	Meter (degF)	SQRT(dP)
1	5	0.18	3.1	140	95	96		0.4243
2	5	0.18	3.1	141	123	97		0.4243
3	5	0.18	3.1	141	131	99		0.4243
4	5	0.18	3.1	141	137	103		0.4243
5	5	0.18	3.1	142	138	104		0.4243
6	5	0.18	3.1	140	138	106		0.4243
7	5	0.17	2.9	143	139	110		0.4123
8	5	0.17	2.9	144	140	112		0.4123
1	5	0.18	3.1	142	132	113		0.4243
2	5	0.17	2.9	141	135	113		0.4123
3	5	0.18	3.1	140	141	110		0.4243
4	5	0.17	2.9	141	141	120		0.4123
5	5	0.17	2.9	141	142	120		0.4123
6	5	0.18	3.1	140	141	119		0.4243
7	5	0.18	3.1	139	140	119		0.4243
8	5	0.18	3.1	139	141	120		0.4243
TOTALS	80	2.83	48.6000	2255.0	2154.0	1761.0		6.7285

FIELD DATA AVERAGES FOR SAMPLE # -- E03211405M5

Velocity Head	("wc)	dP(avg)	=	0.177
Orifice Meter Reading	("wc)	dH(avg)	=	3.038
Stack Temperature	(deg F)	T(s avg)	=	140.9
	(deg C)	T(s avg)	=	60.5
Meter Temperature	(deg F)	T(m avg)	=	122.3
	(deg C)	T(m avg)	=	50.2
Root-Mean-Square dP	("wc)	SQRT(dP)	=	0.421

ISOKINETIC PERFORMANCE WORKSHEET AND PARTICULATE CALCULATIONS

Plant: IRF
Date: 3-15-91
Sample Location: A.B.

Performed by: G.HILL
Test No./Type: A03151133M5METALS
Start/Stop Time: 1133-1404

PARAMETER	SYMBOL	VALUE (calc.)
Nozzle Diameter, Actual (in)	N(d)	0.625
Pitot Tube Correction Factor	C(p)	0.8400
Gas Meter Correction Factor	(alpha)	0.9700
Stack (Duct) Dimensions (in):		
Radius (if round)	R	11.63
Length (if rectangular)	L	0.00
Width (if rectangular)	W	0.00
Area of Stack (sq ft)	A(s)	(2.95)
# of Sample Points	#	24
Total Sampling Time (min)	(theta)	(144.00)
Barometric Pressure (in Hg)	P(b)	30.19
Stack Pressure (in H2O)	P(stack)	-0.070
Gas Meter Initial Reading (cu ft)		574.37
Gas Meter Final Reading (cu ft)		695.69
Net Gas Sample Volume (cu ft)	V(m)	(121.33)
Vol of Liquid Collected (ml)	Vl(c)	272.9
Vol of Liq @ Std. Conds. (scf)	V(w std)	(12.847)
Wt. of Filter Particulate (gm)		0.1709
Wt. of Probe Wash Particulate (gm)		0.0900
Wt of Combined Particulate (gm)	M(p)	(0.2609)
O2 Concentration (by CEM)	% O2	6.90
CO2 Concentration (by CEM)	% CO2	9.10
CO Concentration (by CEM)	% CO	0.0
N2 Concentration (by diff.)	% N2	(84.00)

Sample Point	dClock Time	Velocity Head, dP (in H2O)	Orifice Meter, dH (in H2O)	Stack Temp (degF)	Gas Temp in	Meter (degF) out	SQRT(dP)
1	6	0.07	2.2000	2060.0	82.0	80.0	0.2608
2	6	0.07	2.2000	2060.0	85.0	83.0	0.2608
3	6	0.07	2.2000	2060.0	89.0	85.0	0.2608
4	6	0.07	2.2000	2060.0	95.0	90.0	0.2608
5	6	0.07	2.2000	2060.0	103.0	98.0	0.2608
6	6	0.07	2.2000	2060.0	110.0	101.0	0.2608
7	6	0.07	2.2000	2060.0	117.0	101.0	0.2608
8	6	0.07	2.2000	2060.0	125.0	101.0	0.2608
9	6	0.07	2.2000	2060.0	130.0	103.0	0.2608
10	6	0.07	2.2000	2060.0	131.0	103.0	0.2608
11	6	0.07	2.2000	2060.0	131.0	103.0	0.2608
12	6	0.07	2.2000	2060.0	131.0	103.0	0.2608
1	6	0.07	2.2000	2060.0	128.0	102.0	0.2608
2	6	0.07	2.2000	2060.0	128.0	104.0	0.2608
3	6	0.07	2.2000	2060.0	131.0	104.0	0.2608
4	6	0.07	2.2000	2060.0	131.0	104.0	0.2608
5	6	0.07	2.2000	2060.0	131.0	104.0	0.2608
6	6	0.07	2.2000	2060.0	131.0	104.0	0.2608
7	6	0.07	2.2000	2060.0	131.0	104.0	0.2608
8	6	0.07	2.2000	2060.0	131.0	104.0	0.2608
9	6	0.07	2.2000	2060.0	131.0	104.0	0.2608
10	6	0.07	2.2000	2060.0	131.0	104.0	0.2608
11	6	0.07	2.2000	2060.0	131.0	104.0	0.2608
12	6	0.07	2.2000	2060.0	131.0	104.0	0.2608
TOTALS	144	1.632	52.8	49440	2895	2397	6.258434

FIELD DATA AVERAGES

Avg Velocity Head (in H2O)	dP(avg)	=	0.068
Avg Orifice Meter Reading (in H2O)	dH(avg)	=	2.200
Avg Stack Temperature (degF)	T(s avg)	=	2060.0
Average Meter Temperature (degF)	T(m avg)	=	110.3
Avg SQRT(dP)		=	0.261

CALCULATED VALUES

Meter Volume (std, cu. ft.)	V(m std)	=	110.49
Stack Gas Water Vapor Proportion	B(wo)	=	0.104
Mol. Wt., Stack Gas Dry	M(d)	=	29.73
Mol. Wt., Stack Gas Wet	M(s)	=	28.51
Abs Stack Pressure (in Hg)	P(s)	=	30.18
Avg Stack Velocity (ft/sec)	V(s avg)	=	32.0
Isokineticity (%)	% I	=	99.0
Stack Gas STD Vol Flow (dscfm)	Q(s)	=	1073
Actual Stack Gas Vol Flow (acfm)	Q(a)	=	5669
Particulate Loading, dry(gr/dscf)	C(s std)	=	0.0364
Particulate Loading, @7% O2(mg/dscm)	C(s std)		83
Particulate Loading, dry @ 7 % O2 (gr/dscf)		=	0.0362
Particulate Emission Rate(lb/hr)	E(p)	=	0.335

ISOKINETIC PERFORMANCE WORKSHEET AND PARTICULATE CALCULATIONS

Plant: IRF
Date: 3-19-91
Sample Location: A.B.

Performed by: G.HILL
Test No./Type: A0319100OMSMETALS
Start/Stop Time: 1000-1225

PARAMETER	SYMBOL	VALUE (calc.)
Nozzle Diameter, Actual (in)	N(d)	0.625
Pitot Tube Correction Factor	C(p)	0.8400
Gas Meter Correction Factor	(alpha)	0.9700
Stack (Duct) Dimensions (in):		
Radius (if round)	R	11.63
Length (if rectangular)	L	0.00
Width (if rectangular)	W	0.00
Area of Stack (sq ft)	A(s)	(2.95)
# of Sample Points	#	24
Total Sampling Time (min)	(theta)	(144.00)
Barometric Pressure (in Hg)	P(b)	30.09
Stack Pressure (in H2O)	P(stack)	-0.070
Gas Meter Initial Reading (cu ft)		696.18
Gas Meter Final Reading (cu ft)		811.26
Net Gas Sample Volume (cu ft)	V(m)	(115.08)
Vol of Liquid Collected (ml)	Vl(c)	288.6
Vol of Liq @ Std. Conds. (scf)	V(w std)	(13.583)
Wt. of Filter Particulate (gm)		0.1985
Wt. of Probe Wash Particulate (gm)		0.1500
Wt of Combined Particulate (gm)	M(p)	(0.3485)
O2 Concentration (by CEM)	% O2	6.00
CO2 Concentration (by CEM)	% CO2	10.00
CO Concentration (by CEM)	% CO	0.0
N2 Concentration (by diff.)	% N2	(84.00)

Sample Point	dClock Time	Velocity Head, dP (in H2O)	Orifice Meter, dH (in H2O)	Stack Temp (degF)	Gas Temp in	Meter (degF) out	SQRT(dP)
1	6	0.07	2.2000	2062.0	96.0	82.0	0.2608
2	6	0.07	2.2000	2062.0	109.0	88.0	0.2608
3	6	0.07	2.2000	2062.0	119.0	95.0	0.2608
4	6	0.07	2.2000	2062.0	123.0	98.0	0.2608
5	6	0.07	2.2000	2062.0	125.0	99.0	0.2608
6	6	0.07	2.2000	2062.0	126.0	99.0	0.2608
7	6	0.07	2.2000	2062.0	126.0	101.0	0.2608
8	6	0.07	2.2000	2062.0	127.0	101.0	0.2608
9	6	0.07	2.2000	2062.0	128.0	101.0	0.2608
10	6	0.07	2.2000	2062.0	128.0	101.0	0.2608
11	6	0.07	2.2000	2062.0	128.0	103.0	0.2608
12	6	0.07	2.2000	2062.0	125.0	103.0	0.2608
1	6	0.07	2.2000	2062.0	128.0	101.0	0.2608
2	6	0.07	2.2000	2062.0	130.0	101.0	0.2608
3	6	0.07	2.2000	2062.0	130.0	103.0	0.2608
4	6	0.07	2.2000	2062.0	130.0	105.0	0.2608
5	6	0.07	2.2000	2062.0	130.0	107.0	0.2608
6	6	0.07	2.2000	2062.0	131.0	107.0	0.2608
7	6	0.07	2.2000	2062.0	130.0	107.0	0.2608
8	6	0.07	2.2000	2062.0	130.0	107.0	0.2608
9	6	0.07	2.2000	2062.0	130.0	107.0	0.2608
10	6	0.07	2.2000	2062.0	130.0	107.0	0.2608
11	6	0.07	2.2000	2062.0	130.0	107.0	0.2608
12	6	0.07	2.2000	2062.0	130.0	107.0	0.2608
TOTALS	144	1.632	52.8	49488	3019	2437	6.258434

FIELD DATA AVERAGES

Avg Velocity Head (in H2O)	dP(avg)	=	0.068
Avg Orifice Meter Reading (in H2O)	dH(avg)	=	2.200
Avg Stack Temperature (degF)	T(s avg)	=	2062.0
Average Meter Temperature (degF)	T(m avg)	=	113.7
Avg SQRT(dP)		=	0.261

CALCULATED VALUES

Meter Volume (std, cu. ft.)	V(m std)	=	103.84
Stack Gas Water Vapor Proportion	B(wo)	=	0.116
Mol. Wt., Stack Gas Dry	M(d)	=	29.84
Mol. Wt., Stack Gas Wet	M(s)	=	28.47
Abs Stack Pressure (in Hg)	P(s)	=	30.08
Avg Stack Velocity (ft/sec)	V(s avg)	=	32.1
Isokineticity (%)	% I	=	94.4
Stack Gas STD Vol Flow (dscfm)	Q(s)	=	1058
Actual Stack Gas Vol Flow (acfm)	Q(a)	=	5684
Particulate Loading, dry(gr/dscf)	C(s std)	=	0.0518
Particulate Loading, @7% O2(mg/dscm)	C(s std)	=	111
Particulate Loading, dry @ 7 % O2 (gr/dscf)		=	0.0483
Particulate Emission Rate(lb/hr)	E(p)	=	0.470

ISOKINETIC PERFORMANCE WORKSHEET AND PARTICULATE CALCULATIONS

Plant: IRF
Date: 3-21-91
Sample Location: A.B.

Performed by: G.HILL
Test No./Type: A03211344M5METALS
Start/Stop Time: 1344-1612

PARAMETER	SYMBOL	VALUE (calc.)
Nozzle Diameter, Actual (in)	N(d)	0.625
Pitot Tube Correction Factor	C(p)	0.8400
Gas Meter Correction Factor	(alpha)	0.9700
Stack (Duct) Dimensions (in):		
Radius (if round)	R	11.63
Length (if rectangular)	L	0.00
Width (if rectangular)	W	0.00
Area of Stack (sq ft)	A(s)	(2.95)
# of Sample Points	#	24
Total Sampling Time (min)	(theta)	(144.00)
Barometric Pressure (in Hg)	P(b)	29.88
Stack Pressure (in H2O)	P(stack)	-0.070
Gas Meter Initial Reading (cu ft)		811.59
Gas Meter Final Reading (cu ft)		931.12
Net Gas Sample Volume (cu ft)	V(m)	(119.53)
Vol of Liquid Collected (ml)	Vl(c)	177.9
Vol of Liq @ Std. Conds. (scf)	V(w std)	(8.373)
Wt. of Filter Particulate (gm)		0.1303
Wt. of Probe Wash Particulate (gm)		0.1500
Wt of Combined Particulate (gm)	M(p)	(0.2803)
O2 Concentration (by CEM)	% O2	6.98
CO2 Concentration (by CEM)	% CO2	9.00
CO Concentration (by CEM)	% CO	0.0
N2 Concentration (by diff.)	% N2	(84.02)

FIELD DATA AVERAGES

Avg Velocity Head (in H2O)	dP(avg)	=	0.068
Avg Orifice Meter Reading (in H2O)	dH(avg)	=	2.200
Avg Stack Temperature (degF)	T(s avg)	=	2060.0
Average Meter Temperature (degF)	T(m avg)	=	124.0
Avg SQRT(dP)		=	0.261

CALCULATED VALUES

Meter Volume (std, cu. ft.)	V(m std)	=	105.20
Stack Gas Water Vapor Proportion	B(wo)	=	0.074
Mol. Wt., Stack Gas Dry	M(d)	=	29.72
Mol. Wt., Stack Gas Wet	M(s)	=	28.86
Abs Stack Pressure (in Hg)	P(s)	=	29.87
Avg Stack Velocity (ft/sec)	V(s avg)	=	32.0
Isokineticity (%)	% I	=	92.2
Stack Gas STD Vol Flow (dscfm)	Q(s)	=	1098
Actual Stack Gas Vol Flow (acfm)	Q(a)	=	5664
Particulate Loading, dry(gr/dscf)	C(s std)	=	0.0411
Particulate Loading, @7% O2(mg/dscm)	C(s std)	=	94
Particulate Loading, dry @ 7 % O2 (gr/dscf)		=	0.0411
Particulate Emission Rate(lb/hr)	E(p)	=	0.387

Sample Point	dClock Time	Velocity Head, dP (in H2O)	Orifice Meter,dH (in H2O)	Stack Temp (degF)	Gas Temp in	Meter (degF) out	SQRT(dP)
1	6	0.07	2.2000	2060.0	104.0	89.0	0.2608
2	6	0.07	2.2000	2060.0	119.0	94.0	0.2608
3	6	0.07	2.2000	2060.0	124.0	99.0	0.2608
4	6	0.07	2.2000	2060.0	128.0	102.0	0.2608
5	6	0.07	2.2000	2060.0	134.0	105.0	0.2608
6	6	0.07	2.2000	2060.0	139.0	105.0	0.2608
7	6	0.07	2.2000	2060.0	139.0	110.0	0.2608
8	6	0.07	2.2000	2060.0	139.0	115.0	0.2608
9	6	0.07	2.2000	2060.0	139.0	115.0	0.2608
10	6	0.07	2.2000	2060.0	139.0	115.0	0.2608
11	6	0.07	2.2000	2060.0	140.0	115.0	0.2608
12	6	0.07	2.2000	2060.0	141.0	116.0	0.2608
1	6	0.07	2.2000	2060.0	137.0	114.0	0.2608
2	6	0.07	2.2000	2060.0	139.0	116.0	0.2608
3	6	0.07	2.2000	2060.0	140.0	117.0	0.2608
4	6	0.07	2.2000	2060.0	140.0	117.0	0.2608
5	6	0.07	2.2000	2060.0	141.0	117.0	0.2608
6	6	0.07	2.2000	2060.0	141.0	117.0	0.2608
7	6	0.07	2.2000	2060.0	141.0	117.0	0.2608
8	6	0.07	2.2000	2060.0	140.0	119.0	0.2608
9	6	0.07	2.2000	2060.0	140.0	119.0	0.2608
10	6	0.07	2.2000	2060.0	140.0	119.0	0.2608
11	6	0.07	2.2000	2060.0	140.0	119.0	0.2608
12	6	0.07	2.2000	2060.0	140.0	119.0	0.2608
TOTALS	144	1.632	52.8	49440	3264	2690	6.258434

ISOKINETIC RESULTS

Plant: IRF Updated 3-15-91 Performed by: C.KING CKING
Date: 3-15-91 Printed 03/31/91 Test No./Type: S03151132M5
Sample Location: STACK Start/Stop Time: 1132-1302

PARAMETER	SYMBOL	VALUE (calc.)
Nozzle Diameter, Actual (in)	N(d)	0.376
Pitot Tube Correction Factor	C(p)	0.84
Gas Meter Correction Factor	(alpha)	1.02
Stack (Duct) Dimensions (in):		
Radius (if round)	R	7
Length (if rectangular)	L	----
Width (if rectangular)	W	----
Area of Stack (sq ft)	A(s)	(1.06901)
# of Sample Points	#	12
Total Sampling Time (min)	(theta)	(84.00)
Barometric Pressure (in Hg)	P(b)	30.19
Stack Pressure (in H2O)	P(stack)	3
Gas Meter Initial Reading (cu ft)		855.001
Gas Meter Final Reading (cu ft)		936.619
Net Gas Sample Volume (cu ft)	V(m)	(81.62)
Vol of Liquid Collected (ml)	Vl(c)	269.97
Vol of Liq @ Std. Conds. (scf)	V(w std)	(12.707)
Wt. of Filter Particulate (gm)		0.0635
Wt. of Probe Wash Particulate (gm)		0
Wt of Combined Particulate (gm)	M(p)	(0.0635)
O2 Concentration (by CEM)	%	11.1
CO2 Concentration (by CEM)	%	5.5
CO Concentration (by CEM)	%	0
N2 Concentration (by diff.)	%	(83.40)

CALCULATED RESULTS FOR SAMPLE # --- S03151132M5

Isokineticity		% I	=	[illegible]
Metered Sample Gas Volume	(scf)	V(m std)	=	78.[illegible]2
	(scm)	V(m std)	=	2.212
Stack Gas Flow, std cond.	(dscfm)	Q(s)	=	1327
std cond.	(dscm/min)	Q(s)	=	37.6
actual	(acfm)	Q(a)	=	1676
actual	(acm/min)	Q(a)	=	47.5
Particulate Loading, dry	(gr/dscf)	C(s std)	=	0.0125
@ 7% O2	(gr/dscf)	C(s std)	=	0.0177
@ 7% O2	(mg/dscm)	C(s std)	=	41
Particulate Emission Rate	(lb/hr)	E(p)	=	0.143
	(kg/hr)	E(p)	=	0.065
Stack Gas Water Vapor Proportion		B(wo)	=	0.140
Molecular Weight of Stack Gas, Dry		M(d)	=	29.32
Wet		M(s)	=	27.74
Stack Pressure, absolute (in Hg)		P(s)	=	30.41
Average Stack Velocity (ft/sec)		V(s avg)	=	26.1

Sample Point	dClock Time (min)	Velocity Head, dP (in H2O)	Orifice Meter, dH (in H2O)	Stack Temp (degF)	Gas Temp in	Meter (degF) out	SQRT(dP)
1	7	0.18	3.2	120	113	84	0.4243
2	7	0.19	3.4	121	115	88	0.4359
3	7	0.19	3.4	122	117	89	0.4359
4	7	0.2	3.5	120	117	89	0.4472
5	7	0.2	3.5	123	118	89	0.4472
6	7	0.19	3.4	125	123	91	0.4359
1	7	0.19	3.4	125	133	102	0.4359
2	7	0.19	3.4	125	136	104	0.4359
3	7	0.2	3.5	126	139	106	0.4472
4	7	0.19	3.4	125	139	108	0.4359
5	7	0.19	3.4	123	139	108	0.4359
6	7	0.19	3.4	122	139	108	0.4359
TOTALS	84	2.30	40.9000	1477.0	1528.0	1166.0	5.2530

FIELD DATA AVERAGES FOR SAMPLE # -- S03151132M5

Velocity Head	(*wc)	dP(avg)	=	0.192
Orifice Meter Reading	(*wc)	dH(avg)	=	3.408
Stack Temperature	(deg F)	T(s avg)	=	123.1
	(deg C)	T(s avg)	=	50.6
Meter Temperature	(deg F)	T(m avg)	=	112.3
	(deg C)	T(m avg)	=	44.6
Root-Mean-Square dP	(*wc)	SQRT(dP)	=	0.438

ISOKINETIC RESULTS

Plant: IRF Updated 3-15-91 Performed by: C.KING CKING
Date: 3-19-91 Printed 03/31/91 Test No./Type: S03191051M5
Sample Location: STACK Start/Stop Time: 1051-1222

PARAMETER	SYMBOL	VALUE (calc.)
Nozzle Diameter, Actual (in)	N(d)	0.376
Pitot Tube Correction Factor	C(p)	0.84
Gas Meter Correction Factor	(alpha)	1.02
Stack (Duct) Dimensions (in):		
Radius (if round)	R	7
Length (if rectangular)	L	----
Width (if rectangular)	W	----
Area of Stack (sq ft)	A(s)	(1.06901)
# of Sample Points	#	12
Total Sampling Time (min)	(theta)	(84.00)
Barometric Pressure (in Hg)	P(b)	30.09
Stack Pressure (in H2O)	P(stack)	3
Gas Meter Initial Reading (cu ft)		938.33
Gas Meter Final Reading (cu ft)		1018.67
Net Gas Sample Volume (cu ft)	V(m)	(80.34)
Vol of Liquid Collected (ml)	Vl(c)	344.74
Vol of Liq @ Std. Conds. (scf)	V(w std)	(16.227)
Wt. of Filter Particulate (gm)		0.0892
Wt. of Probe Wash Particulate (gm)		0.01
Wt of Combined Particulate (gm)	M(p)	(0.0992)
O2 Concentration (by CEM)	%	10
CO2 Concentration (by CEM)	%	6.2
CO Concentration (by CEM)	%	0
N2 Concentration (by diff.)	%	(83.80)

CALCULATED RESULTS FOR SAMPLE # --- S03191051M5

Isokineticity		% I	=	99.7
Metered Sample Gas Volume	(scf)	V(m std)	=	76.92
	(scm)	V(m std)	=	2.178
Stack Gas Flow, std cond.	(dscfm)	Q(s)	=	1275
std cond.	(dscm/min)	Q(s)	=	36.1
actual	(acfm)	Q(a)	=	1688
actual	(acm/min)	Q(a)	=	47.8
Particulate Loading, dry	(gr/dscf)	C(s std)	=	0.0199
@ 7% O2	(gr/dscf)	C(s std)	=	0.0253
@ 7% O2	(mg/dscm)	C(s std)	=	58
Particulate Emission Rate	(lb/hr)	E(p)	=	0.217
	(kg/hr)	E(p)	=	0.099
Stack Gas Water Vapor Proportion		B(wo)	=	0.174
Molecular Weight of Stack Gas, Dry		M(d)	=	29.39
Wet		M(s)	=	27.41
Stack Pressure, absolute (in Hg)		P(s)	=	30.31
Average Stack Velocity (ft/sec)		V(s avg)	=	26.3

Sample Point	dClock Time (min)	Velocity Head, dP (in H2O)	Orifice Meter, dH (in H2O)	Stack Temp (degF)	Gas Temp in	Gas Temp out	Meter (degF)	SQRT(dP)
1	7	0.18	3.2	125	107	85		0.4243
2	7	0.19	3.4	125	120	88		0.4359
3	7	0.18	3.2	125	124	90		0.4243
4	7	0.19	3.4	125	126	91		0.4359
5	7	0.2	3.5	125	127	93		0.4472
6	7	0.2	3.5	126	128	96		0.4472
1	7	0.2	3.5	125	110	98		0.4472
2	7	0.19	3.4	125	132	99		0.4359
3	7	0.2	3.5	125	131	101		0.4472
4	7	0.18	3.2	125	131	101		0.4243
5	7	0.19	3.4	125	131	102		0.4359
6	7	0.19	3.4	125	131	102		0.4359
TOTALS	84	2.29	40.6000	1501.0	1498.0	1146.0		5.2411

FIELD DATA AVERAGES FOR SAMPLE # -- S03191051M5

Velocity Head	("wc)	dP(avg)	=	0.191
Orifice Meter Reading	("wc)	dH(avg)	=	3.383
Stack Temperature	(deg F)	T(s avg)	=	125.1
	(deg C)	T(s avg)	=	51.7
Meter Temperature	(deg F)	T(m avg)	=	110.2
	(deg C)	T(m avg)	=	43.4
Root-Mean-Square dP	("wc)	SQRT(dP)	=	0.437

ISOKINETIC RESULTS

Plant: IRF Updated 03-29-91 Performed by: CHARLY KING
Date: 03-21-91 Printed 01/04/80 Test No./Type: S03211405HCL
Sample Location: STACK Start/Stop Time: 1405-1538

PARAMETER	SYMBOL	VALUE (calc.)
Nozzle Diameter, Actual (in)	N(d)	0.376
Pitot Tube Correction Factor	C(p)	0.84
Gas Meter Correction Factor	(alpha)	1.02
Stack (Duct) Dimensions (in):		
Radius (if round)	R	7
Length (if rectangular)	L	——
Width (if rectangular)	W	——
Area of Stack (sq ft)	A(s)	(1.06901)
# of Sample Points	#	12
Total Sampling Time (min)	(theta)	(84.00)
Barometric Pressure (in Hg)	P(b)	30.09
Stack Pressure (in H2O)	P(stack)	0.8
Gas Meter Initial Reading (cu ft)		19.743
Gas Meter Final Reading (cu ft)		97.735
Net Gas Sample Volume (cu ft)	V(m)	(77.99)
Vol of Liquid Collected (ml)	Vl(c)	523.24
Vol of Liq @ Std. Conds. (scf)	V(w std)	(24.864)
Wt. of Filter Particulate (gm)		0.0913
Wt. of Probe Wash Particulate (gm)		0.01
Wt of Combined Particulate (gm)	M(p)	(0.1013)
O2 Concentration (by OEM)	%	7.9
CO2 Concentration (by OEM)	%	8.1
CO Concentration (by OEM)	%	0
N2 Concentration (by diff.)	%	(84.00)

CALCULATED RESULTS FOR SAMPLE # —— S03211405HCL

Isokineticity		% I	=	1
Metered Sample Gas Volume	(scf)	V(m std)	=	73.56
	(scm)	V(m std)	=	2.083
Stack Gas Flow, std cond.	(dscfm)	Q(s)	=	1179
std cond.	(dscm/min)	Q(s)	=	33.4
actual	(acfm)	Q(a)	=	1809
actual	(acm/min)	Q(a)	=	51.2
Particulate Loading, dry	(gr/dscf)	C(s std)	=	0.0212
@ 7% O2	(gr/dscf)	C(s std)	=	0.0227
@ 7% O2	(mg/dscm)	C(s std)	=	52
Particulate Emission Rate	(lb/hr)	E(p)	=	0.215
	(kg/hr)	E(p)	=	0.097
Stack Gas Water Vapor Proportion		B(wo)	=	0.253
Molecular Weight of Stack Gas, Dry		M(d)	=	29.61
Wet		M(s)	=	26.68
Stack Pressure, absolute (in Hg)		P(s)	=	30.15
Average Stack Velocity (ft/sec)		V(s avg)	=	28.2

Sample Point	dClock Time (min)	Velocity Head, dP (in H2O)	Orifice Meter, dH (in H2O)	Stack Temp (degF)	Gas Temp in	Gas Temp out	Meter (degF)	SQRT(dP)
1	7	0.2	3.2	150	94	95		0.4472
2	7	0.2	3.2	151	115	98		0.4472
3	7	0.2	3.2	150	128	101		0.4472
4	7	0.21	3.4	150	136	104		0.4583
5	7	0.22	3.5	150	136	106		0.4690
6	7	0.2	3.2	150	137	106		0.4472
1	7	0.2	3.2	150	133	108		0.4472
2	7	0.2	3.2	151	137	109		0.4472
3	7	0.21	3.4	150	139	112		0.4583
4	7	0.2	3.2	150	139	111		0.4472
5	7	0.2	3.2	151	139	112		0.4472
6	7	0.2	3.2	150	139	112		0.4472
TOTALS	84	2.44	39.1000	1803.0	1572.0	1274.0		5.4105

FIELD DATA AVERAGES FOR SAMPLE # — S03211405HCL

Velocity Head	("wc)	dP(avg)	=	0.203
Orifice Meter Reading	("wc)	dH(avg)	=	3.258
Stack Temperature	(deg F)	T(s avg)	=	150.3
	(deg C)	T(s avg)	=	65.7
Meter Temperature	(deg F)	T(m avg)	=	118.6
	(deg C)	T(m avg)	=	48.1
Root-Mean-Square dP	("wc)	SQRT(dP)	=	0.451

Newbedford Harbor
Cascade Impactor Data

Plant: IRF
Date: 3-19-91
Sample location: A.B.

Performed by: G.HILL
Test No./Type: A03191123CASCADE
Start/Stop Time: 1123-1218

Sampling Data		Stage	Catch(mg)	%	Cum. % Less Than	ECD (microns)	log ECD	log Cum. %
E-time=	55							
Vm=	25.47	1	0.0	0.0	100.0	11.7	1.068185	2
Pb=	30.09	2	0.2	0.2	99.8	9.7	0.986771	1.999008
Ts=	2062	3	2.6	3.0	96.8	6.6	0.819543	1.985908
Sstat=	-0.07	4	0.8	0.9	95.9	4.5	0.653212	1.981796
Tm=	107.5	5	1.5	1.7	94.2	2.9	0.462397	1.973980
Delta h=	0.8	6	0.2	0.2	94.0	1.4	0.146128	1.972927
Delta p=	0.07	7	4.1	4.7	89.3	0.90	-0.04575	1.950762
Dn=	0.468	8	5.5	6.3	83.0	0.61	-0.21467	1.919131
% Isokin=	94.4	Backup	72.8	83.0	0.0	0.61	-0.21467	-13.5463
Inp ACFM=	0.48	Total	87.7	100.0				
Va(std)=	26.44							
ag/scm=	163.38							

Newbedford Harbor
Cascade Impactor Data

Plant: IRF
Date: 3-21-91
Sample location: A.B.

Performed by: G.HILL
Test No./Type: A03211517CASCADE
Start/Stop Time: 1517-1604

Sampling Data		Stage	Catch(mg)	%	Cum. % Less Than	ECD (microns)	log ECD	log Cum. %
E-time=	47							
Vm=	25.24	1	0.0	0.0	100.0	11.7	1.068185	2
Pb=	29.98	2	2.8	1.4	98.6	9.7	0.986771	1.993858
Ts=	2060	3	6.2	3.1	95.5	6.6	0.819543	1.979941
Sstat=	-0.07	4	9.4	4.7	90.8	4.5	0.653212	1.957953
Tm=	104.5	5	3.7	1.9	88.9	2.9	0.462397	1.948983
Delta h=	0.8	6	6.5	3.3	85.7	1.4	0.146128	1.932762
Delta p=	0.07	7	14.2	7.1	78.5	0.90	-0.04575	1.895066
Dn=	0.475	8	13.0	6.5	72.0	0.61	-0.21467	1.857429
% Isokin=	105.7	Backup	143.6	72.0	0.0	0.61	-0.21467	ERR
Imp ACFM=	0.56	Total	199.4	100.0				
Vm(std)=	26.20							
mg/scm=	374.84							

Newbedford Harbor
Cascade Impactor Data

Plant: IRF
Date: 3-15-91
Sample location: A.B.

Performed by: G.HILL
Test No./Type: A03151225CASCADE
Start/Stop Time: 1225-1325

Sampling Data		Stage	Catch(mg)	%	Cum. % Less Than	ECD (microns)	log ECD	log Cum. %
E-time=	60							
Vm=	31.55	1	3.4	4.4	95.6	11.7	1.068185	1.980360
Pb=	30.19	2	4.7	6.1	89.5	9.7	0.986771	1.951662
Ts=	2060	3	9.5	12.4	77.1	6.6	0.819543	1.887128
Sstat=	-0.07	4	10.9	14.2	62.9	4.5	0.653212	1.798919
Tm=	108	5	4.0	5.2	57.7	2.9	0.462397	1.761456
Delta h=	0.6	6	0.0	0.0	57.7	1.4	0.146128	1.761456
Delta p=	0.07	7	0.4	0.5	57.2	0.90	-0.04575	1.757526
Dn=	0.470	8	2.9	3.8	53.4	0.61	-0.21467	1.727915
% Isokin=	104.4	Backup	41.1	53.4	0.0	0.61	-0.21467	-13.8473
Imp ACFM=	0.55	Total	76.9	100.0				
Vm(std)=	32.76							
mg/scm=	115.65							

APPENDIX E

CALCULATIONS SUPPORTING WASTEWATER EFFLUENT LIMITS

CALCULATIONS TO DETERMINE TECHNOLOGY BASED EFFLUENT LIMITS

THE TREATABILITY STUDY PERFORMED ON WASTEWATERS GENERATED FROM SEDIMENT MATERIAL COLLECTED FROM THE HOT SPOTS (DEC 1990 - JAN 1991) INDICATED THAT THE FOLLOWING EFFLUENT CONCENTRATIONS ARE ACHIEVABLE

CONSTITUENT	ACHIEVABLE CONCENTRATION (mg/l)	
PCBs	<0.6	(DETECTION LIMIT)
PAHS	—	
CADMIUM	5	(DETECTION LIMIT)
CHROMIUM (+6)	6	(DETECTION LIMIT)
COPPER	7	
LEAD	4	
IRON	2,000	
NICKEL	18	
ZINC	74	

ACHIEVABLE CONCENTRATIONS WERE DETERMINED BY TAKING THE AVERAGE RESULTS OF EFFLUENT CONCENTRATIONS FROM THE TREATABILITY STUDIES USING THE SELECTED TREATMENT PROCESS. THESE CONCENTRATIONS ARE CONSIDERED TO REPRESENT THE LONG TERM AVERAGE FOR THE TREATMENT SYSTEM.

ESTIMATE OF DILUTION IN MIXING ZONE

MASSACHUSETTS PRESENTLY DOES NOT HAVE A POLICY REGARDING MIXING ZONES. HOWEVER A CONSERVATIVE MIXING ZONE WAS CALCULATED AND USED IN THE FOLLOWING CALCULATIONS TO VERIFY THAT THE TECHNOLOGY BASED EFFLUENT LIMITS EITHER:

(A) MEET BACKGROUND CONCENTRATION LEVELS AS RECOMMENDED IN THE RI/D,
(B) DO NOT EXCEED WATER QUALITY LIMITATIONS.

REFER TO EPA-440/4-85-032 SEPTEMBER 1985 DOCUMENT
TECHNICAL SUPPORT DOCUMENT FOR WATER QUALITY BASED TOXICS CONTROL
MODELS FOR DISCHARGE INDUCED MIXING (P. 35)

$$S = 0.31 \frac{S'}{D}$$

WHERE:

S = FLUX AVERAGED DILUTION
S' = DISTANCE FROM OUTLET TO MIXING ZONE (FT)
D = DIAMETER OF OUTLET (FT)

FOR NEW BEDFORD HOT SPOTS SYSTEM

ASSUME MIXING ZONE IS 1/10 WIDTH OF RIVER AT DISCHARGE
WIDTH OF ACUSHNET RIVER AT PILOT STUDY COIL AREA IS 1,320 FT
(WIDTH OF RIVER DOES NOT INCLUDE INLETS)

$S' = 0.10 (1{,}320 FT) = 132 FT$

OUTFALL LINE = 10 INCHES = 0.83 FT

$S = 0.31 (132 FT / 0.83 FT)$
$= 49.3$

(DILUTION OF DISCHARGE IS THEREFORE 49.3 TIMES FOR THIS OUTFALL)

WATER QUALITY CRITERIA

THE FOLLOWING INFORMATION IS BASED ON QUALITY CRITERIA FOR WATER, 1976 "RED BOOK" AND OTHER FEDERAL PUBLICATIONS

CONSTITUENT	ACUTE CRITERION (µg/l)	CHRONIC CRITERION (µg/l)
PCBs	10	0.03
PAHs	—	—
CADMIUM	43	9.3
CHROMIUM (+6)	1,100	50
COPPER	2.9	2.9
LEAD	140	5.6
IRON	1,000	1,000
NICKEL	75	8.3
ZINC	95	86.
ACUTE TOXICITY UNITS	0.3	NA
CHRONIC TOXICITY UNITS	NA	1

CALCULATE WASTE LOAD ALLOCATION (WLA)

WLA = WATER QUALITY CRITERION (ACUTE/CHRONIC) X S
REFER TO WATER QUALITY INFORMATION ON PREVIOUS PAGE

EXAMPLE

FOR CADIUM

$WLA(Cd)_a$ = 43 PPB X 49.3 = 2,119.9 PPB
$WLA(Cd)_c$ = 9.3 PPB X 49.3 = 458.5 PPB

CONSTITUENT	WLA_a (µg/l)	WLA_c (µg/l)
PCBs	493	1.48
PAHs	—	—
CADMIUM	2,119.9	458.5
CHROMIUM (+6)	54,230.	2,465.
COPPER	143.	143.
LEAD	6,902.	276.
IRON	49,300.	49,300.
NICKEL	3,698	409.
ZINC	4,684.	4,240.

CALCULATE MONTHLY AVERAGE AND DAILY MAXIMUM ALLOWABLE LIMITS BASED ON TECHNOLOGY BASED DATA.

USING THE WASTE LOAD ALLOCATION VALUES CALCULATED ABOVE THE MONTHLY AVERAGE AND DAILY MAXIMUM ALLOWABLE LIMITS FOR ACUTE AND CHRONIC VALUES WERE CALCULATED
REFER TO EPA-440/4-87-005 JULY 1987 MANUAL
PERMIT WRITERS GUIDE TO WATER QUALITY BASED PERMITTING FOR TOXIC POLLUTANT (P.12)

ASSUME COEFFICIENT OF VARIATION (CV) = 0.6 PER INSTRUCTIONS

FOR 95% CONFIDENCE LIMIT MULT. OF LTA
DAILY MAXIMUM FACTOR = 2.13
MONTHLY AVERAGE FACTOR = 1.41 FOR 7 SAMPLES
1.23 FOR 20 SAMPLES
1.19 FOR 30 SAMPLES

$$\frac{7-20}{1.41-1.23} = \frac{7-10}{1.41-X}$$

$$\frac{-13}{0.18} = \frac{-3}{1.41-X}$$

ASSUME LINEAR REGRESSION BETWEEN FACTORS. NOT EXACTLY TRUE, BUT VALUE DOES NOT VARY SIGNIFICANTLY

$-0.54 = -13(1.41 - x)$
$-0.54 = -18.33 + 13x$
$17.79 = 13x$
$x = 1.37$

FOR 10 SAMPLES LTA FACTOR = 1.37

ASSUME COEFFICIENT OF VARIATION (CV) = 0.6 PER INSTRUCTIONS
MULTIPLIERS OF WLAs
DAILY MAXIMUM FACTOR = 0.32
MONTHLY AVERAGE FACTOR = 0.61 FOR 7 SAMPLES
0.78 FOR 30 SAMPLES

$$\frac{7-30}{0.61-0.78} = \frac{7-10}{0.61-x}$$

$$\frac{-23}{-0.17} = \frac{-3}{0.61-x}$$

$0.51 = -23(0.61 - x)$
$0.51 = -14.03 + 23x$
$14.54 = 23x$
$x = 0.63$

FOR 10 SAMPLES $LTA_c = 0.63$

EXAMPLE

FOR CADIUM

$LTA_a = WLA_a \times FACTOR$
$= (2119.9\ PPB)(0.32) = 678.4\ PPB$

$LTA_c = WLA_c \times FACTOR$
$= (458.5\ PPB)(0.63) = 288.9\ PPB$ (FOR 10 SAMPLES/MONTH)
$= (458.5\ PPB)(0.78) = 357.6\ PPB$ (FOR 30 SAMPLES/MONTH)

SELECT LTA VALUE WHICH IS LOWEST. IN THIS CASE THE LTA_c IS MORE CONSERVATIVE

MAXIMUM DAILY LIMIT $= (288.9\ PPB)(2.13) = 615.4\ PPB$ (FOR 10 SAMPLES/MONTH)
$= (357.6\ PPB)(2.13) = 761.7\ PPB$ (FOR 30 SAMPLES/MONTH)

AVERAGE MONTHLY AVERAGE $= (288.9\ PPB)(1.37) = 395.8\ PPB$ (FOR 10 SAMPLES/MONTH)
$= (357.6\ PPB)(1.19) = 425.5\ PPB$ (FOR 30 SAMPLES/MONTH)

ALLOWABLE EFFLUENT LIMITS BASED ON WATER QUALITY CRITERIA

CONSTITUENT	LONG TERM AVERAGE			MAXIMUM DAILY LIMIT		AVERAGE MONTHLY LIMIT	
	ACUTE	CHRONIC (10 SAMPLES)	CHRONIC (30 SAMPLES)	10 SAMPLES	30 SAMPLES	10 SAMPLES	30 SAMPLES
PCBs	157.8	0.93	1.15	1.98	2.45	1.27	1.37
PAHs	—	—	—	—	—	—	—
CADIUM	678.4	288.9	357.6	615.4	761.7	395.8	425.5
CHROMIUM (+6)	17,354	1553	1923	3308	4096	2128	2288
COPPER	45.8	90.1	111.5	97.6	97.6	54.5	54.5
LEAD	2209	173.9	215.3	370.4	458.6	238.2	256.2
IRON	15,776	31,059	38,454	33,603	33,603	21,613	18,773
NICKEL	1183.4	257.7	319.	548.9	679.5	353.	379.6
ZINC	1498.9	2671.2	3307.2	3,192.7	3,192.7	2,053.5	1,783.7

ALL VALUES ARE IN PPB

ERM-New England, Inc.

205 Portland Street • Boston, Massachusetts 02114 • (617) 742-8228

Project NEW BEDFORD HOT SPOTS DESIGN
Subject WASTEWATER EFFLUENT LIMITS
W.O. No. 223-01-05
By JDF
Chkd. by
Sheet 5 of 26
Date 11/12/91
Date

EFFLUENT LIMITS BASED ON TECHNOLOGY LIMITS

TREATABILITY STUDY ACHIEVABLE CONCENTRATIONS ARE PRESENTED ON PAGE 1

USING FACTORS DETERMINED FOR WATER QUALITY LIMITS PREVIOUSLY, CALCULATE DAILY MAXIMUM AND MONTHLY AVERAGE LIMITS FOR TECHNOLOGY BASED LIMITS

EXAMPLE

FOR CADIUM

MAXIMUM DAILY LIMIT = (5 PPB)(2.13) = 10.7 PPB (FOR 10 SAMPLES/MONTH)

= (5 PPB)(2.13) = 10.7 PPB (FOR 30 SAMPLES/MONTH)

AVERAGE MONTHLY AVERAGE = (5 PPB)(1.37) = 6.9 PPB (FOR 10 SAMPLES/MONTH)

= (5 PPB)(1.19) = 6.0 PPB (FOR 30 SAMPLES/MONTH)

CONSTITUENT	10 SAMPLES/MONTH		30 SAMPLES/MONTH	
	DAILY MAX (PPB)	MONTHLY AVG (PPB)	DAILY MAX (PPB)	MONTHLY AVG (PPB)
PCBs	1.3	0.82	1.3	0.71
PAHs	—	—	—	—
CADMIUM	10.7	6.9	10.7	6.0
CHROMIUM (+6)	12.8	3.2	12.8	7.1
COPPER	14.9	9.6	14.9	8.3
LEAD	8.5	5.5	3.5	4.8
IRON	4,260.	2,740.	4,260.	2,330.
NICKEL	38.3	24.7	38.3	21.4
ZINC	157.6	101.4	157.6	88.1

ERM-New England, Inc.

205 Portland Street • Boston, Massachusetts 02114 • (617) 742-8228

Project NEW BEDFORD HOT SPOTS DESIGN
Subject WASTEWATER EFFLUENT LIMITS

W.O. No. 203-01-07 Sheet 7 of 26
By JDF Date 11/12/91
Chkd. by ____ Date ____

CONSTITUENT	ANTICIPATED INFLUENT WASTEWATER CONCENTRATION	TECHNOLOGY BASED LIMITS 30 SAMPLES/MONTH		WATER QUALITY CRITERIA		IN STREAM CONCENTRATIONS
		DAILY MAX	MONTHLY AVG.	ACUTE	CHRONIC	
ROD IDENTIFIED CONSTITUENTS						
PCBs	49,000	1.3	0.71	10	0.03	0.6
PAHs	—	—	—	—	—	—
CADMIUM	17	10.7	6.0	43	9.3	0.2
CHROMIUM (+6)	264	12.8	7.1	50	50	—
COPPER	754	14.9	8.3	2.9	2.9	5.4
LEAD	783	8.5	4.8	140	5.6	2.7
OTHER CONSTITUENTS						
IRON	41,200	4,260	2,380	1000	1000	—
NICKEL	730	38.3	21.4	75	8.3	—
ZINC	2,230	157.6	88.1	95	86	—
ALUMINUM	10,600	—	—	—	—	—

EFFLUENT DILUTION / TOXICITY

FROM PAGE 2 DILUTION FACTOR EQUALS 49.3

EFFLUENT TU = 1.0 TU

PREVIOUS DATA INDICATED EFFLUENT (WITH MAGNAFLOC 1596C) WAS TOXIC TO CHAMPIA PARVULA (ALGAL REPRODUCTIVE TEST) ABOUT 6% AND ARBACIA PUNCULATA (SEA URCHIN SPERM CELL TEST) ABOVE 5%.

EFFLUENT TU = 1.0 TU

CHRONIC TOXICITY (TUc) = 100 / NOEL

WHERE NOEL = NO OBSERVED EFFECT LEVEL

AT OUTFALL MADEP RECOMMENDS TU = 1.0

THEN WHOLE EFFLUENT TOXICITY MUST BE EQUAL TO 100%
IE. THE EFFLUENT AT FULL STRENGTH MUST NOT SHOW ANY ADVERSE EFFECT

IF DILUTION ZONE IS ALLOWED TU = 1.0 AT EDGE OF DILUTION ZONE.

$$\text{EFFLUENT TU} = 1.0 \frac{(100)}{5\%}$$

$$= 20$$

DILUTION CALCULATED IS 49.3 WHICH EXCEEDS THE DILUTION REQUIRED TO ACHIEVE 1.0 TU AT EDGE OF MIXING ZONE.

9 OF 26

United States
Environmental Protection
Agency

Office of Water
Washington DC 20460

September, 1985
EPA-440/4-85-032

EPA

Technical Support Document for Water Quality-based Toxics Control

PB86-150067

PROPERTY OF
E.P.A.
LIBRARY

dict critical condition mixing and to provide the coefficients needed for that WLA model.

General Recommendations for Outfall Design

Surface discharges at the shoreline of a waterbody are not recommended for toxic discharges. They usually have an impact along the shoreline when there is a significant crossflow, and they yield high surface concentrations.

Submerged discharges offer more flexibility in meeting the design goals for toxic discharges. They may be in the form of a single pipe outlet or of multiport diffusers, giving rise to one or several submerged discharge jets. Submerged multiport discharges do, however, have certain limitations in their use. They are not feasible in very shallow waterbodies or where periodic dredging or considerable scour and deposition occurs.

Specific design objectives for submerged discharges should be to avoid direct surface impingement and bottom attachment of the submerged jet or jets. Surface and bottom impacts should be evaluated at critical design conditions (low flow or high stratification) and at off-design conditions (higher flow or lower stratification) in order to ensure the best placement and design of the diffuser. Multiport diffusers provide more dilution than single outlets, but the alignment of the diffuser with the receiving water flow direction influences how much dilution will be provided. If the outlet structure is directed parallel to the direction of flow, dilution under high ambient velocities (off-design conditions) may be worse than under low velocities (critical design conditions). Some of the complexities of multiport diffusers have been summarized by Jirka [12], Roberts [13], and Holley and Jirka [11].

In rivers the preferred arrangement for a submerged discharge is to direct the outlet into the flow direction or vertically upward. In order to deal with the reversing currents of estuaries and coastal bays, the preferred arrangements for offshore discharges are parallel diffuser alignment (tee diffuser) or perpendicular diffuser alignment (staged diffuser) [12]. In lakes and reservoirs, the preferred arrangement for a negatively buoyant discharge is to direct the diffuser vertically upward. A positively buoyant, vertically directed jet could penetrate stratification, so the preference for this discharge is to orient the diffuser at a slight angle above the horizontal.

River and Run-of-river Reservoir Analyses

Rivers and run-of-river reservoirs are waterbodies that have a persistent through-flow in the downstream direction and do not exhibit significant natural density stratification. Interim recommendations on toxicologically based design flows for mixing zone and completely mixed steady state modeling of rivers are described in Appendix D of this document. Run-of-river reservoirs with residence times less than 20 days at critical conditions should also be analyzed using these design flows [14]. Regulated rivers may have a minimum flow in excess of these toxicological flows. In such cases, the minimum flow should be used in WLA modeling.

When a waste is discharged into a river, any discharge-induced mixing (i.e., mixing associated with the momentum and/or buoyancy of the effluent) occurs first. The second stage of mixing is controlled by ambient turbulence. The ambient mixing first accomplishes mixing over the depth, if this was not provided by the discharge-induced mixing, and then ambient mixing accomplishes mixing over the width. A final stage occurs after the waste is fully mixed throughout the cross-section. For nearly steady state conditions in rivers, the concentration distribution in this final stage is influenced primarily by the flow velocity and any biochemical and physico-chemical processes.

Models for Discharge-induced Mixing

The first stage of mixing is controlled by jet momentum and buoyancy. This stage generally encompasses most of the regulatory mixing zone. Especially in shallow environments, it is important to ascertain whether near field instabilities occur. These instabilities, associated with surface and bottom interaction and localized recirculation cells extending over the entire water depth, can cause build-up of effluent concentrations. Criteria for these instabilities and specialized predictive models have been developed [11,12].

In the absence of near field instabilities, horizontal or nearly horizontal discharges will create a clearly defined jet in the water column that will initially occupy only a small fraction of the available water depth. The following equations and models are designed for such stable near field conditions.

A minimum estimate of the dilution available in a mixing zone can be made using this equation:

$$S = 0.31 \frac{s}{D}$$

Where S = flux-averaged dilution
s = distance from outlet to edge of the mixing zone
D = diameter of outlet

The equation provides a *minimum* estimate of mixing zone dilution because it is based on the assumptions that ambient velocity is zero and that the discharge is neutrally buoyant. The equation also assumes that the jet is strong enough to reach the edge of the mixing zone. The same equation can be used to estimate the minimum dilution within the mixing zone before the CMC must be met to prevent lethal conditions.

Mixing graphs that include the effect of discharge buoyancy and ambient velocity can be found in Holley

United States
Environmental Protection
Agency

Office of
Water
Washington DC 20460

EPA 440/4-87-005
July 1987

11 OF 26.

Water

EPA

Permit Writer's Guide to Water Quality-Based Permitting for Toxic Pollutants

a) calculate the Maximum Daily permit limit as:

$$\text{Maximum Daily} = e^{(\mu + Z\sigma)}$$

where:

$Z = 1.645$ for the 95th percentile
$Z = 2.326$ for the 99th percentile

and:

$$\mu = \ln(\text{LTA}) - .5\sigma^2$$
$$\sigma^2 = \ln(\text{CV}^2 + 1)$$

b) calculate the Average Monthly permit limit (μ and Z described above) as:

$$\text{Average Monthly} = e^{(\mu_n + Z\sigma_n)}$$

where:

$$\mu_n = \mu + (\sigma^2 - \sigma_n^2)/2$$

and:

$$\sigma_n^2 = \ln[1 + ((e^{\sigma^2} - 1)/n)]$$

n = number of effluent sampling observations per month

Simplified Limit Derivation Procedure

To increase the ease of application of this permit limit derivation procedure, Table 3-1, was developed. It provides sets of multipliers which accomplish the same result as the equations above: translating steady-state model outputs into LTAs and deriving permit limits based on the limiting LTA. The procedure in Table 3-1 can be used for permit issuance on a routine basis.

Table 3.1. Permit limit derivation process for routine application of the procedure described in Subsection 3.1.A.

Step 1. Convert the acute WLA from TU_a to TU_c by multiplying the TU_a by an appropriate acute-chronic ratio (ACR). Use 10 if unknown.

Step 2. Convert the acute and chronic WLAs into LTA values for the 99th percentile by multiplying the two WLA values by the appropriate multiplier in the multiplier table below. Use a coefficient of variation (CV) of 0.6 where the CV is unknown or calculate a CV using available data.

CV	Multipliers of WLAs to get:			
	LTA_a	LTA_c for WLA average (n)		
		n = 4	n = 7	n = 30*
0.4	0.44	0.64	0.71	0.85
0.6	0.32	0.53	0.61	0.78
0.8	0.25	0.44	0.52	0.72
1.0	0.20	0.37	0.46	0.67
1.2	0.17	0.32	0.40	0.62
1.5	0.14	0.26	0.34	0.55
2.0	0.12	0.20	0.26	0.47

*30 day average values are recommended for ammonia and carcinogens in specific circumstances.

Step 3. Select the lower LTA. This value is the more limiting for the plant in question. Two permit limits are calculated from this limiting LTA.

Step 4. Calculate the Maximum Daily and the Average Monthly permit limits for the 95th and 99th percentile by multiplying the LTA by the appropriate multiplier in the multiplier table below. Use a coefficient of variation (CV) of 0.6 where the CV is unknown or calculate a CV using available data.

CV	Multipliers of LTA for 95% limits				
	Max Daily limit	Average Monthly limit for n samples per month			
		n = 4	n = 7	n = 20	n = 30
0.4	1.75	1.36	1.27	1.15	1.12
0.6	2.13	1.55	1.41	1.23	1.19
0.8	2.48	1.75	1.56	1.32	1.26
1.0	2.78	1.94	1.71	1.40	1.33
1.2	3.03	2.14	1.86	1.49	1.39
1.5	3.31	2.40	2.07	1.62	1.50
2.0	3.61	2.78	2.41	1.84	1.68

CV	Multipliers of LTA for 99% limits				
	Max Daily limit	Average Monthly limit for n samples per month			
		n = 4	n = 7	n = 20	n = 30
0.4	2.3	1.6	1.4	1.2	1.2
0.6	3.1	1.9	1.6	1.4	1.3
0.8	4.0	2.3	1.9	1.5	1.4
1.0	4.9	2.7	2.2	1.6	1.5
1.2	5.8	3.1	2.5	1.8	1.6
1.5	6.9	3.8	3.0	2.0	1.8
2.0	8.6	4.9	3.8	2.5	2.1

Rationale for Using This Permitting Procedure

This permit limit derivation procedure is strongly recommended for implementing both narrative and numeric State water quality standards for the following reasons:

First, it provides a mechanism for setting permit limits which will be toxicologically protective. When a steady state WLA is established, there is an inherent assumption that the effluent is not variable and thus will never exceed the calculated value. It is clear that effluents, however, are extremely variable. Therefore, permit limits are established using a value corresponding to a percentile of the required probability distribution of the effluent (usually the 95th percentile). If the WLA is established as a value never to be exceeded and permit limits are commonly calculated to reflect the 95th percentile, the possibility for water quality impact exists if the WLA is simply adopted as the permit limit. The parameter controlled by a permit limit directly adopted from the WLA will vary in concentration above and below the concentration intended to be the permit limit. The permit limit derivation procedure recommended in Subsection 3.1.A allows the calculation of permit limits to reflect the different bases for steady state WLAs and permit limits.

Second, this procedure allows the comparison of two independent WLAs to determine which is more limiting for a discharge. This is necessary because there are two numbers for protection against two types of toxic effect; short term acute effects and longer term chronic effects. Each criterion is applied under different mixing conditions for different durations. Acute effects are stringently limited based on one hour

Special Conditions

Compliance Biomonitoring Requirements for Part I Toxicity-Based Permit Limitations

The permittee shall perform toxicity tests, as described below, on the discharge from outfall(s) _____.

1. The permittee shall initiate the following series of tests within ____ days of the effective date of this Part to evaluate wastewater toxicity. Such testing will determine if an appropriately dilute effluent sample affects the survival, reproduction, or growth of the test organisms. All tests will be conducted on 24-hour composite samples of ____% final effluent. A minimum of four replicates will be used in each of the following tests. The Student's t test shall be used to determine whether differences in control and effluent data are significant.

   a. The permittee shall conduct a 7-day *Ceriodaphnia* survival and reproduction test on samples of ____% final effluent (diluted by appropriate control water). Toxicity will be demonstrated if there is a statistically significant difference at the 95% confidence level in survival or growth between *Ceriodaphnia* exposed to an appropriate control water and ____% final effluent. All test solutions shall be renewed daily. If, in any control, more than 20% of the test organisms die, that test (control and effluent) shall be repeated.

   b. The permittee shall conduct a 7-day fathead minnow larval survival and growth test on samples of ____% final effluent (diluted by appropriate control water). Toxicity will be demonstrated if there is a statistically significant difference at the 95% confidence level in survival or growth between *Pimephales promelas* exposed to an appropriate control water and ____% final effluent. All test solutions shall be renewed daily. If, in any control, more than 20% of the test organism die, that test (control and effluent) shall be repeated.

2. The toxicity tests specified in Paragraph (1) above, shall be conducted once every month for a period of one year following initiation of the tests and once every 6 months thereafter for the duration of the permit. Results shall be reported according to EPA/600/4-85/014, Section 10, Report Preparation, and shall be submitted to EPA with the monthly discharge monitoring report. If any one test indicates the presence of toxicity, another confirmatory chronic toxicity test using the specified methodology and same test species shall be conducted within 2 weeks.

3. All test organisms, procedures and quality assurance criteria used shall be in accordance with Short-term Methods for Estimating the Chronic Toxicity of Effluents and Receiving Waters to Freshwater Organisms, Section 13; *Ceriodaphnia* Survival and Reproduction Test Method 1002.0, Section 11; Fathead Minnow (*Pimephales promelas*) Larval Survival and Growth Test Method 1000.0, EPA/600/4-85/014. The selection of an appropriate control water for the toxicity tests shall be submitted to EPA for review and approval prior to use.

MASSACHUSETTS WATER QUALITY STANDARDS

IMPLEMENTATION POLICY FOR THE CONTROL OF

TOXIC POLLUTANTS IN SURFACE WATERS

February 23, 1990

Summary:

1. This policy applies to all toxic pollutants. It includes a separate section on chlorinated discharges.

2. Effluent limits for toxic pollutants shall be derived in three ways: 1) the water quality criteria; 2) recommended limits; and 3) site-specific limits. The latter two are established through the permit process.

3. The Division has identified a number of sources for recommended limits and methods to establish site-specific limits. Final effluent limitations shall be based on the most sensitive water use for the receiving water Class as determined by the Division.

4. Whole effluent toxicity testing will be used to complement specific chemical testing. At high dilutions, limits will be based on mixing zone considerations; acute testing is used. At low dilutions receiving waters become water-quality limited; chronic testing is used in these cases.

I. Introduction

Toxic pollutants are broadly defined as any substance or combination of substances that are capable of producing an adverse effect to an organism or its off-spring. The effect may be the result of direct or indirect exposure and may injure structure, or function, or cause death to the organism. These pollutants include, but are not limited to, those identified in 314 CMR 3.16. This list corresponds to Section 307(a) of the Federal Clean Water Act which lists 65 compounds and families of compounds (which potentially include thousands of specific compounds) as toxic pollutants. EPA has interpreted that list to include 126 priority pollutants for regulatory purposes. EPA's "Gold Book" - Quality Criteria for Water 1986, EPA 440/5-86-001 - contains information and recommendations for these compounds.

The purpose of this policy is to set the Division's goals with regard to toxic pollutants, interpret the water quality standards, and explain the use of biotoxicity tests in the permit process.

II. Goals

The objectives for the control of toxic pollutants are to:

1. protect public health;
2. protect aquatic life and wildlife; and
3. prevent the accumulation of toxic substances in toxic amounts.

The protection of public health encompasses such water uses as public drinking water supply, primary contact recreation and secondary contact recreation. Protection of aquatic life and wildlife refers to both short-term (acute) and long-term (chronic) protection. Prevention of the accumulation of toxic pollutants refers to the concentration of pollutants in sediment and/or biota that may eventually become toxic and cause an adverse effect to human health or aquatic life. The edibility of fish and shellfish for both commercial and recreational use are included in this goal.

III. Water Quality Standards

The Surface Water Quality Standards use both narrative and numerical criteria to control toxic pollutants. This is necessary because relatively few numerical criteria have been established for the vast number of potentially toxic substances. Narrative criteria also add necessary flexibility to the regulation. The blanket application of numerical criteria to all waters under all circumstances is not always prudent or reasonable. Severe economic impacts may occur if the Division does not exercise some authority to establish site-specific criteria.

Water quality criteria are found in Section 4.05 of the Surface Water Quality Standards. Each water use Class carries eight parameters with criteria specific to that Class. These include (1) Dissolved Oxygen, (2) Temperature, (3) pH, (4) Fecal Coliform Bacteria, (5) Solids, (6) Color and Turbidity, (7) Oil and Grease and (8) Taste and Odor. These are generally considered "conventional pollutants" as defined by the Federal Clean Water Act. Four additional criteria applicable to all waters (not Class-specific) are presented in Subsection (5). Of these, Section 4.05(5)(e) contains the main narrative criteria for "toxic pollutants". The narrative divided into four parts (1) Recommended Limits, (2) Site-Specific Limits, (3) Accumulation of Pollutants and (4) Public Notice.

The narrative states that where the Division determines that a toxic pollutant is of concern, and no criterion is specified in the regulation, then the Division will use a recommended limit. A recommended limit is a proposed criterion from an authoritative source. The main source of recommended limits is EPA's "Gold Book". However, where appropriate, the Division may use other sources such as the Massachusetts Drinking Water Regulations (310 CMR 22.00) or the Federal Food and Drug Administration's Action Levels for fish and shellfish. In this respect recommended limits function exactly like criteria except that they are listed and documented by these other authoritative sources. Incorporating these limits by reference is appropriate for they are firmly established and widely used publications and it is not necessary to reproduce them within the regulations.

Where recommended limits are not available for a pollutant of concern the Division shall establish a site-specific limit. Site-specific limits are also appropriate when local conditions are so different than those used to develop a recommended limit or criterion, that the recommended limit is deemed invalid. Site-specific limits may be established to account for some unique aspect of the local situation such as background water chemistry or the presence absence of particular water uses. The major source of site-specific limits are (1) DEP's Office of Research and Standards and (2) safe exposure levels determined by toxicity testing using methods approved by the Director. Toxicity testing requirements are detailed in Part V of this policy.

Part three of the narrative explains that, where necessary, the Division will employ an additional margin of safety when establishing effluent limits to prevent pollutants from accumulating to toxic levels in the environment. This means that the Division's "fishable" goal includes edibility. Effluent limits shall be established to assure that fish, shellfish and other aquatic life are suitable for consumption. It also means that toxic pollutants that accumulate to levels that are toxic to aquatic life shall be controlled. Where a specific chemical is known to bioaccumulate, more stringent limits than those required by the toxicity testing requirements may be required.

Two important points are made in the narrative:

1. There is no blanket application of recommended limits. Recommended limits and site-specific limits are established case-by-case based on the Division's perception of the pollutants of concern and the potential impacts;

2. Recommended limits and site-specific limits are not established as permanent criteria within the regulation. They are used to establish permit limits or regulate abatement actions where criteria are unavailable or invalid. Therefore, they last only for the life of the permit or abatement action. They are subject to revision when the permit is renewed. This may occur, for example, as the Gold Brook is revised, or other new information becomes available to the Division.

Part four of the narrative provides for public input. In all cases recommended limits and site-specific limits undergo intergovernmental and public review as part of the permit process. This means that the limit is reviewed in its proper context, as part of the particular permit or abatement action in question.

IV. Interpretation of the Narrative Criterion

Table I is provided to summarize the information necessary to interpret the narrative. Each water use Class is listed in a column. Based on the specific designated uses for each Class, those categories that have a potential for toxic problems are indicated by X's. Toxic problems are divided by the Division's three goals - human health, aquatic life and bioaccumulation. Human health is further subdivided into four major exposure routes: 1) drinking water ingestion, 2) dermal contact and 3) inhalation; and 4) fish ingestion. Aquatic life is subdivided into acute and chronic effects.

CALCULATIONS TO DETERMINE TECHNOLOGY BASED EFFLUENT LIMITS

THE TREATABILITY STUDY PERFORMED ON WASTEWATERS GENERATED FROM SEDIMENT MATERIAL COLLECTED FROM THE HOT SPOTS (DEC 1990 - JAN 1991) INDICATED THAT THE FOLLOWING EFFLUENT CONCENTRATIONS ARE ACHIEVABLE

CONSTITUENT	ACHIEVABLE CONCENTRATION (mg/l)	
PCBs	<0.6	(DETECTION LIMIT)
PAHs	—	
CADMIUM	5	(DETECTION LIMIT)
CHROMIUM (+6)	6	(DETECTION LIMIT)
COPPER	7	
LEAD	4	
IRON	2,000	
NICKEL	18	
ZINC	74	

ACHIEVABLE CONCENTRATIONS WERE DETERMINED BY TAKING THE AVERAGE RESULTS OF EFFLUENT CONCENTRATIONS FROM THE TREATABILITY STUDIES USING THE SELECTED TREATMENT PROCESS. THESE CONCENTRATIONS ARE CONSIDERED TO REPRESENT THE LONG TERM AVERAGE FOR THE TREATMENT SYSTEM.

ESTIMATE OF DILUTION IN MIXING ZONE

MASSACHUSETTS PRESENTLY DOES NOT HAVE A POLICY REGARDING MIXING ZONES. HOWEVER A CONSERVATIVE MIXING ZONE WAS CALCULATED AND USED IN THE FOLLOWING CALCULATIONS TO VERIFY THAT THE TECHNOLOGY BASED EFFLUENT LIMITS EITHER:

(A) MEET BACKGROUND CONCENTRATION LEVELS AS RECOMMENDED IN THE ROD,
(B) DO NOT EXCEED WATER QUALITY LIMITATIONS.

REFER TO EPA-440/4-85-032 SEPTEMBER 1985 DOCUMENT
TECHNICAL SUPPORT DOCUMENT FOR WATER QUALITY BASED TOXICS CONTROL
MODELS FOR DISCHARGE INDUCED MIXING (P. 35)

$$S = 0.31 \frac{S'}{D}$$

WHERE:

S = FLUX AVERAGED DILUTION
S' = DISTANCE FROM OUTLET TO MIXING ZONE (FT)
D = DIAMETER OF OUTLET (FT)

FOR NEW BEDFORD HOT SPOTS SYSTEM

ASSUME MIXING ZONE IS 1/10 WIDTH OF RIVER AT DISCHARGE
WIDTH OF ACUSHNET RIVER AT PILOT STUDY COVE AREA IS 1,320 FT
(WIDTH OF RIVER DOES NOT INCLUDE INLETS)

$S' = 0.10 (1{,}320 FT) = 132 FT$

OUTFALL LINE = 10 INCHES = 0.83 FT

$S = 0.31 (132 FT / 0.83 FT)$
$= 49.3$

(DILUTION OF DISCHARGE IS THEREFORE 49.3 TIMES FOR THIS OUTFALL)

WATER QUALITY CRITERIA

THE FOLLOWING INFORMATION IS BASED ON QUALITY CRITERIA FOR WATER, 1976 "RED BOOK" AND OTHER FEDERAL PUBLICATIONS

CONSTITUENT	ACUTE CRITERION (µg/l)	CHRONIC CRITERION (µg/l)
PCBs	10	0.03
PAHs	—	—
CADMIUM	43	9.3
CHROMIUM (+6)	1,100	50
COPPER	2.9	2.9
LEAD	140	5.6
IRON	1,000	1,000
NICKEL	75	9.3
ZINC	95	96.
ACUTE TOXICITY UNITS	0.3	NA
CHRONIC TOXICITY UNITS	NA	1

CALCULATE WASTE LOAD ALLOCATION (WLA)

WLA = WATER QUALITY CRITERION (ACUTE/CHRONIC) X S
REFER TO WATER QUALITY INFORMATION ON PREVIOUS PAGE

EXAMPLE

FOR CADIUM

$WLA(Cd)_a$ = 43 PPB X 49.3 = 2,119.9 PPB
$WLA(Cd)_c$ = 9.3 PPB X 49.3 = 458.5 PPB

CONSTITUENT	WLA_a (µg/l)	WLA_c (µg/l)
PCBs	493	1.48
PAHs	—	—
CADMIUM	2,119.9	458.5
CHROMIUM (+6)	54,230.	2,465.
COPPER	143.	143.
LEAD	6,902.	276.
IRON	49,300.	49,300.
NICKEL	3,698	409.
ZINC	4,684.	4,240.

CALCULATE MONTHLY AVERAGE AND DAILY MAXIMUM ALLOWABLE LIMITS BASED ON TECHNOLOGY BASED DATA

USING THE WASTE LOAD ALLOCATION VALUES CALCULATED ABOVE THE MONTHLY AVERAGE AND DAILY MAXIMUM ALLOWABLE LIMITS FOR ACUTE AND CHRONIC VALUES WERE CALCULATED
REFER TO EPA-440/4-87-005 JULY 1987 MANUAL
PERMIT WRITERS GUIDE TO WATER QUALITY BASED PERMITTING FOR TOXIC POLLUTANT (P.12)

ASSUME COEFFICIENT OF VARIATION (CV) = 0.6 PER INSTRUCTIONS

FOR 95% CONFIDENCE LIMIT MULT. OF LTA
DAILY MAXIMUM FACTOR = 2.13
MONTHLY AVERAGE FACTOR = 1.41 FOR 7 SAMPLES
1.23 FOR 20 SAMPLES
1.19 FOR 30 SAMPLES

$$\frac{7-20}{1.41-1.23} = \frac{7-10}{1.41-x}$$

$$\frac{-13}{0.18} = \frac{-3}{1.41-x}$$

ASSUME LINEAR REGRESSION BETWEEN FACTORS. NOT EXACTLY TRUE, BUT VALUE DOES NOT VARY SIGNIFICANTLY

$-0.54 = -13(1.41 - x)$
$-0.54 = -18.33 + 13x$
$17.79 = 13x$
$x = 1.37$

FOR 10 SAMPLES LTA FACTOR = 1.37

ASSUME COEFFICIENT OF VARIATION (CV) = 0.6 PER INSTRUCTIONS
MULTIPLIERS OF WLAs
DAILY MAXIMUM FACTOR = 0.32
MONTHLY AVERAGE FACTOR = 0.61 FOR 7 SAMPLES
0.78 FOR 30 SAMPLES

$$\frac{7-30}{0.61-0.78} = \frac{7-10}{0.61-x}$$

$$\frac{-23}{-0.17} = \frac{-3}{0.61-x}$$

$0.51 = -23(0.61 - x)$
$0.51 = -14.03 + 23x$
$14.54 = 23x$
$x = 0.63$

FOR 10 SAMPLES $LTA_c = 0.63$

EXAMPLE

FOR CADIUM

LTA_a = WLA_a x FACTOR
= (2119.9 PPB)(0.32) = 678.4 PPB

LTA_c = WLA_c x FACTOR
= (458.5 PPB)(0.63) = 288.9 PPB (FOR 10 SAMPLES/MONTH)
= (458.5 PPB)(0.78) = 357.6 PPB (FOR 30 SAMPLES/MONTH)

SELECT LTA VALUE WHICH IS LOWEST. IN THIS CASE THE LTA_c IS MORE CONSERVATIVE

MAXIMUM DAILY LIMIT = (288.9 PPB)(2.13) = 615.4 PPB (FOR 10 SAMPLES/MONTH)
= (357.6 PPB)(2.13) = 761.7 PPB (FOR 30 SAMPLES/MONTH)

AVERAGE MONTHLY AVERAGE = (288.9 PPB)(1.37) = 395.8 PPB (FOR 10 SAMPLES/MONTH)
= (357.6 PPB)(1.19) = 425.5 PPB (FOR 30 SAMPLES/MONTH)

ALLOWABLE EFFLUENT LIMITS BASED ON WATER QUALITY CRITERIA

CONSTITUENT	LONG TERM AVERAGE			MAXIMUM DAILY LIMIT		AVERAGE MONTHLY LIMIT	
	ACUTE	CHRONIC (10 SAMPLES)	CHRONIC (30 SAMPLES)	10 SAMPLES	30 SAMPLES	10 SAMPLES	30 SAMPLES
PCBs	157.8	0.93	1.15	1.98	2.45	1.27	1.37
PAHs	—	—	—	—	—	—	—
CADIUM	678.4	288.9	357.6	615.4	761.7	395.8	425.5
CHROMIUM (+6)	17,354	1553	1923	3308	4096	2128	2288
COPPER	45.8	90.1	111.5	97.6	97.6	54.5	54.5
LEAD	2209	173.9	215.3	370.4	458.6	238.2	256.2
IRON	15,776	31,059	38,454	33,603	33,603	21,613	18,773
NICKEL	1183.4	257.7	319.	548.9	679.5	353.	379.6
ZINC	1498.9	2671.2	3307.2	3,192.7	3,192.7	2,053.5	1,783.7

ALL VALUES ARE IN PPB

ERM-New England, Inc.

205 Portland Street • Boston, Massachusetts 02114 • (617) 742-8228

Project NEWBEDFORD HOT SPOTS DESIGN
Subject WASTEWATER EFFLUENT LIMITS
W.O. No. 223-01-09
By JDF
Sheet 5 of 26
Date 11/12/91
Chkd. by
Date

EFFLUENT LIMITS BASED ON TECHNOLOGY LIMITS

TREATABILITY STUDY ACHIEVABLE CONCENTRATIONS ARE PRESENTED ON PAGE 1

USING FACTORS DETERMINED FOR WATER QUALITY LIMITS PREVIOUSLY, CALCULATE DAILY MAXIMUM AND MONTHLY AVERAGE LIMITS FOR TECHNOLOGY BASED LIMITS

EXAMPLE

FOR CADIUM

MAXIMUM DAILY LIMIT = (5 PPB)(2.13) = 10.7 PPB (FOR 10 SAMPLES/MONTH)

= (5 PPB)(2.13) = 10.7 PPB (FOR 30 SAMPLES/MONTH)

AVERAGE MONTHLY AVERAGE = (5 PPB)(1.37) = 6.9 PPB (FOR 10 SAMPLES/MONTH)

= (5 PPB)(1.19) = 6.0 PPB (FOR 30 SAMPLES/MONTH)

CONSTITUENT	10 SAMPLES/MONTH		30 SAMPLES/MONTH	
	DAILY MAX (PPB)	MONTHLY AVG (PPB)	DAILY MAX (PPB)	MONTHLY AVG (PPB)
PCBs	1.3	0.82	1.3	0.71
PAHs	—	—	—	—
CADMIUM	10.7	6.9	10.7	6.0
CHROMIUM (+6)	12.8	8.2	12.8	7.1
COPPER	14.9	9.6	14.9	8.3
LEAD	8.5	5.5	3.5	4.8
IRON	4,260.	2,740.	4,260.	2,330.
NICKEL	39.3	24.7	39.3	21.4
ZINC	157.6	101.4	157.6	88.1

TABLE I

SOURCES OF RECOMMENDED AND SITE-SPECIFIC LIMITS

	HUMAN HEALTH				AQUATIC LIFE		BIOACCUMULATION
CLASS	DRINKING WATER	DERMAL CONTACT	INHALATION	FISH INGESTION	ACUTE	CHRONIC	
A	X	X	X	X	X	X	X
B	(X)	X	X	X	X	X	X
C	-	(X)	X	X	X	X	X
SA	-	X	X	X	X	X	X
SB	-	X	X	X	X	X	X
SC	-	(X)	X	X	X	X	X
CRITERIA							
1. Gold Book	X	-	-	X	X	X	-
2. ORS	-	X*	X*	X*	-	-	-
3. FDA Acton Levels	-	-	-	X	-	-	-
4. MA DWR (SDWA)	X	-	-	-	-	-	-
5. MA SWQ	-	-	-	-	X*	X*	X*

X = Area of Concern
(X) = Minor Application
X* = Site-Specific Limit

1. Gold Book = Quality Criteria for Water 1986
2. ORS = Office of Research and Standards
3. FDA = Federal Food and Drug Administration
4. MA DWR = MA Drinking Water Regulations
5. MA SWQ = Surface Water Quality Standards

From the chart it can be seen that some problems, such as chronic toxicity to aquatic life, are universal throughout the classes. Other problems, such as drinking water ingestion are limited to Class A waters (note that some Class B waters are designated supplies with appropriate treatment).

In the bottom half of the chart, the potential sources of recommended limits and site-specific limits are identified. There are five basic sources: 1) EPA's Gold Book; 2) the Massachusetts Department of Environmental Protection's Office of Research and Standards; 3) Federal Food and Drug Administration's Action Levels; 4) the Massachusetts Drinking Water Regulations (310 CRM 22.00); and 5) the Massachusetts Surface Water Quality Standards (314 CMR 4.00). When these sources are exhausted other sources may be used.

A. Protection of Human Health

When drinking water ingestion is a perceived problem, as it is in Class A waters (and to a minor extent in Class B waters), two sources of recommended limits are available: EPA's Gold Book and the Massachusetts Drinking Water Regulations. Both sources rely heavily on Maximum Contaminant Levels (MCL's) from the Federal Safe Drinking Water Act.

Other human health exposure routes are universally applicable to all Classes except for dermal contact. Dermal contact has only a minor application in Class C and Class SC waters because they are designated for secondary contact recreation only. Recommended limits for fish ingestion are provided in the Gold Book and the FDA Action Levels. These can be expressed either as safe levels in the surface water or a concentration in the fish or shellfish flesh. Of the latter, these are sometimes expressed for either the whole organism or the edible portions alone. Recommended limits for dermal contact and inhalation are unavailable. Therefore, the Division shall establish site-specific limits as necessary. The Division shall rely on methodologies and recommendations of the Office of Research and Standards for setting these limits.

When a pollutant of concern is a carcinogen, an excess lifetime cancer risk (ELCR) must be selected to determine a limit. EPA has estimated risk levels of 10^{-5}, 10^{-6}, and 10^{-7} in its Gold Book under one set of exposure assumptions. The Division shall use a risk management goal of 10^{-6} for individual chemicals and 10^{-5} for mixtures of chemicals. Application of these recommended limits for monitoring ambient water quality shall be tempered by consideration of the practical quantitation limit (PQL) for these parameters. In cases where the PQL is greater than the concentration of the chemical in water set on the basis of cancer risk, the PQL shall be used for evaluation of ambient water quality and enforcement purposes.

When the Division evaluates specific wastewater discharges, the health-based concentration shall be used as the goal for discharge limits. The Division reserves the right to consider costs and availability of waste treatment technologies when applying the health-based number to effluent limits. It is also understood that these management goals are based upon lifetime human exposure assumptions. Should the projected exposure scenario not concur with this assumption, then the risks may be managed differently.

B. Protection of Aquatic Life

Protection of aquatic life is universally applicable to all Classes of surface water. Since the chronic limit is always equal to, or more stringent than, the acute limit, it becomes the controlling factor. Furthermore, as a general rule, aquatic life limits for non-carcinogens are more stringent than human health limits. Therefore, waterbodies can often be protected for both human health and aquatic life by using the chronic limit. (As noted, this general rule does not apply to pollutants that are carcinogens). The Gold Book has recommended chronic exposure limits for 34 of the 126 priority pollutants. When limits are not available or considered unapplicable because of site-specific conditions, a toxicity limit is applied to the discharge. When effluents do not exceed the specified limits for toxic units (based on aggregate toxicity measured by a biotoxicity test) they are considered in compliance with chronic toxicity requirements of the regulations.

C. Prevention of Bioaccumulation

Prevention of bioaccumulation is the third goal. Bioaccumulation results from pollutants persisting in the environment and accumulating in biota or food chains to become potential toxic problems. The bioaccumulant may affect either human health or aquatic life. The fish ingestion exposure route addresses only a part of this goal. Pollutants may accumulate in plants or animals to a degree that adversely affect the organism, its offspring or the food chain. Recommended limits for protection from bioaccumulation are largely unavailable because each problem has many complicating site-specific factors. Therefore, site-specific limits must be established. The narrative empowers the Division to use an appropriate additional margin of safety when developing effluent limitations to account for the adverse effects of bioaccumulation. The Division shall use bioconcentration factors established in the literature, Octanol-Water partition coefficients and other relevant sources of information to establish site-specific limits for pollutants that bioaccumulate.

V. Toxicity Tests in the Permit Process

A. Background

Toxicity tests are a means to determine the adverse affects of a chemical or a complex effluent using living organisms. The tests measure the degree of response of an exposed test organism to a specific chemical or effluent. It is the method of choice for analyzing effects to aquatic life because:

1. Effluents could contain chemicals that may be overlooked in specific chemical testing. Toxicity testing measures the response to a whole effluent without concern for its specific chemical makeup;

2. Combinations of chemicals may have additive, synergistic or antagonistic effects. These effects generally unpredictable from chemical specific testing but are measured directly with toxicity testing; and

3. The bioavailability of toxic pollutants may vary with site-specific factors. For example, the toxicity of certain heavy metals may vary with the hardness of the water. These factors can be addressed by using site water for dilution.

Toxic effects to aquatic life can be either short-term or long-term. Short-term, or acute effects are evinced in a few days. Long-term, or chronic effects, are more subtle and may involve the impairment of an organism's competitive ability, survival behavior or reproductive potential.

The Division recommends specific tests and methodologies for the measurement of acute and chronic toxicity. At least two species (usually a vertebrate and invertebrate)are required. The results of the most sensitive test are used for enforcement purposes. The specific organisms, laboratory procedures and quality and control measures are referenced in Attachment I.

In terms of biotoxicity tests the Division interprets its narrative criterion for the protection of aquatic life to mean that the acceptable receiving water concentration whole effluent toxicity is the highest measured continuous concentration of an effluent that causes no observed acute or chronic effect on a representative standard test organism. This is referred to as the No Observed Effect Concentration (NOEC). Therefore at critical conditions, the NOEC measured in percent must be greater than or equal to the receiving water concentration (RWC) of effluent in percent by volume:

$$NOEC \geq RWC$$

Critical conditions for inland rivers and streams are defined by the standards as the lowest average flow for seven consecutive days to be expected once in ten years (7Q10). For lakes, ponds, and for marine waters, critical conditions are more difficult to define and must be established case-by-case.

As a general rule the Division prefers to use acute toxicity tests in the permit process. The normal end point measured by the acute test is the LC_{50} or the concentration that is lethal to 50% of the test organisms. An LC_{50} value, measured in percent, represents the degree of toxicity on a inverse logarithmic scale. A more convenient unit of expression is the toxic unit (T.U.). A toxic unit is defined as 100 divided by the LC_{50}:

$$T.U. = \frac{100}{LC_{50}}$$

Therefore an LC_{50} of 100% equals 1 T.U.

B. Effluent Limits

In order to determine the allowable effluent concentration of toxicity it is necessary to know the dilution available to particular effluent. The dilution factor is the ratio of the receiving water flow (Qr) plus the effluent flow (Qe) to the effluent flow:

$$\frac{Qr + Qe}{Qe} = \text{dilution factor}$$

The Division assigns effluent limits according to dilution factors based on perceived risk.

Calculation of receiving water concentrations using dilution factors assumes completely mixed conditions. Usually there is a transition distance where the effluent concentration is diluted to the receiving water concentration. This area or volume of the receiving water is referred to as a mixing zone. Additional limits are often needed to protect mixing zones from toxic effects.

The standards allow mixing zones to exceed criteria so long as there is safe and adequate passage for swimming and drifting organisms with no deleterious effects on their populations. It is assumed that chronic toxicity is not a concern in mixing zones because swimming and drifting organisms will not be in the zone long enough for chronic exposure. Acute toxicity is a concern but is also dependent on time-exposure relationships. In the absence of detailed site-specific time-exposure histories for all important species, it is necessary to set a conservative (non-time dependent) acute limit.

The recommended criterion to prevent acutely toxic effects is 0.3 T.U. This is based on an adjustment factor of one-third used to extrapolate the LC_{50} to an LC_1 (concentration at which 1% of the test organisms die). In order to assure that this limit is met within a short distance of the effluent pipe the Division has established an end-of-pipe limit of 1.0 T.U. for dilution factors less than or equal to 100 and 2.0 T.U. for dilution factors greater than 100.

Table II takes mixing zone considerations and other effluent limitations into account. It shows the allowable whole effluent toxicity limitations and testing requirements based on available dilution at critical conditions.

At dilution factors less than 10, effluent toxicity poses a high risk to receiving waters. These waters are considered water quality limited in that the effluent limit of 1.0 Toxic Unit may not be stringent enough to protect receiving waters. The Division requires both acute and chronic end points to be reported. Two limits apply to the effluent: (1) the chronic test should result in a No Observed Effect Concentration greater than or equal to the Receiving Water Concentration (NOEC $\geq$ RWC) and (2) the acute level should be less than or equal to 1.0 Toxic Unit (an $LC_{50} \geq 100\%$).

Dilutions from 10 - 100 have an effluent limit of 1.0 Toxic Unit. In the lower portion of this range (from 10 - 20) waters may be water-quality limited if the specific toxicants involved have high acute to chronic ratios. Therefore, the Division requires chronic monitoring to assure that the effluent limitation is adequate. In the range of dilution from 20 - 100 chronic monitoring is not required. Waters with dilutions above 100 have an effluent limit of 2.0 Toxic Units.

Recommended methods for toxicity testing are referenced in the Amendment to this policy. Basically, the Division requires four (4) samples per year at dilutions less than or equal to 100. Each sample is tested with two (2) test species. At dilutions greater than 100, two samples per year are required.

TABLE II

WHOLE EFFLUENT TOXICITY

REQUIREMENTS FOR NPDES PERMITS

DILUTION FACTOR[1]	EFFLUENT LIMITS[2]	TESTING REQUIREMENTS
< 10	NOEC ≥ RWC 1.0 Toxic Unit	4 samples/year; 2 species; Acute and chronic endpoints
10 - 20	1.0 Toxic Unit	4 samples/year; 2 species; Acute and chronic endpoints
>20 - 100	1.0 Toxic Unit	4 samples/year; 2 species; Acute endpoint
>100	2.0 Toxic Unit	2 samples/year; 2 species; Acute endpoint

Notes: 1 Ratio of receiving water plus effluent flow to effluent flow at critical conditions:

$$\frac{Qr + Qe}{Qe} = \text{dilution factor}$$

2 Effluent limits apply to the total toxicity concentration prior to mixing with receiving water. Limits are in Toxic Units where:

$$\frac{100}{LC_{50}} = \text{Toxic Units}$$

and LC_{50} = Concentration lethal to 50% of the test organisms

VI. Chlorinated Discharges

Chlorination is a commonly used method of disinfection for wastewater effluents because of its effectiveness and relative low cost. However, chlorine is toxic to higher forms of life and its discharge to surface waters may be damaging to aquatic life.

Three factors dictate a separate policy for the control of chlorine from other toxic pollutants:

1) the potential benefits to water uses (swimming, shellfish, etc.) from chlorination practices;

2) the nearly universal use of chlorine as a disinfectant at wastewater treatment facilities in Massachusetts; and

3) the complex chemistry of chlorine and its reactiveness, that may rapidly render it non-toxic by factors other than dilution.

The following policy is recommended in order to resolve the sometimes conflicting goals of disinfection and protection of aquatic life in a practical manner for the issuance of permits.

A. Disinfection Requirements

Disinfection shall provide adequate protection for public health. Disinfection of effluents containing pathogenic organisms shall be required:

1) year-round in segments designated for public water supply or shellfishing;

2) seasonally (April 1 through October 15) in segments designated for primary contact recreation;

3) as necessary in other waters where the Division determines there is a public health need.

B. Dechlorination or Alternative Disinfection

Aquatic life shall be protected from the harmful effects of disinfection by-products. High risk categories include areas with low dilution or areas with particularly sensitive species. Dechlorination or alternative means disinfection shall be required:

1) in segments with dilution factors less than 10;

2) in segments designated cold water fisheries.

These requirements will be implemented through the facilities planning process for municipal discharges or at the time of permit application for industrial discharges.

C. Water Quality Criteria

EPA criteria shall be used to establish acceptable receiving water levels of residual chlorine. Total maximum daily loads shall be based on an allowable receiving water concentration of 0.01 mg/l Total Residual Chlorine (TRC). This level may be exceeded:

1) within authorized mixing zones; or

2) where site-specific alternative criteria have been established by the Division.

D. Effluent Limitations

Waters shall be protected from unnecessary discharges of excess chlorine. In segments with dilution factors greater than 100, the maximum effluent concentration of chlorine shall not exceed 1.0 mg/l TRC.

AMENDMENT

RECOMMENDED METHODS FOR TOXICITY TESTING FOR NPDES PERMITS

Inland Waters

Acute Test

- 48-hour *Ceriodaphnia dubia* static test
- 48 hour *Pimephales promelas* static test

Chronic Tests

- 7-day *Ceriodaphnia dubia* static renewal test
- 7-day *Pimphales promelas* static renewal test

Coastal and Marine Waters

Acute Tests

- 48-hour or 96-hour *Mysidopsis bahia* static test
- 48-hour or 96-hour *Cyprinodon variegatus* static test

Chronic Tests

- 7-day *Cyprinodon variegatus* survival and growth test
- 7-day *Mennidia* sp. survival and growth test
- *Arbacia punctulata* fertilization test
- 7-9 day *Champia parvula* sexual reproduction test

Recommended Manuals

Weber, C.I. et al, 1989. Short Term Methods for Estimating the Chronic Toxicity of Effluents and Receiving Water to Freshwater Organisms. Second Edition. Office of Research and Development, Cincinnati, OH, EPA-/4-89/001.

Peltier, W. and Weber C.I. 1985. Methods for Measuring the Acute Toxicity of Effluents to Freshwater and Marine Organisms. Third Edition. Office of Research and Development, Cincinnati, OH, EPA-600/4-85-013.

Weber, C.I. et al, 1988. Short Term Methods for Estimating the Chronic Toxicity of Effluents and Receiving Waters to Marine and Estuarine Organisms, Office of Research and Development, Cincinnati, OH, EPA-600/4-87/28.

APHA 1985, Standard Methods for the Examination of Water and Wastewater, 16th Edition. American Public Health Association, 1015 Fifteenth St., N.W., Washington, D.C. 20005.

REFERENCES

1. Biomonitoring to Achieve Control of Toxic Effluents, U.S. EPA, Technology Transfer, EPA/625/8-87/013.

2. Hutchinson, Michael S., Regulation of Suspected Carcinogens in Wastewater, Massachusetts Department of Environmental Protection, Office of Research and Standards, Memorandum to Russell Isaac, February 23, 1989.

3. Permit Writer's Guide to Water Quality - Based Permitting for Toxic Pollutants, U.S. EPA Office of Water, Washington, D.C., July 1987 EPA/440/4-87-005.

4. Technical Support Document for Water Quality - Based Toxics Control, U.S. EPA Office of Water, Washington, D.C., September 1985.

5. Water Quality Criteria 1972, National Academies of Science and Engineering, Washington, D.C. 1972.

APPENDIX F

DESIGN CALCULATIONS

DESIGN CALCULATIONS

TABLE OF CONTENTS

		Page
I.	**Design Criteria**	1
II.	**Dredging**	2
III.	**Wastewater Treatment**	6
	1. Treatment Process Flow Diagram	6
	2. Primary Sedimentation (CDF #1)	8
	3. Equalization (CDF #2)	15
	4. Flocculation Tanks	22
	5. Alum Feed System	24
	6. Polymer Feed System	29
	7. Secondary Clarification (CDF #3)	37
	8. Hydrogen Peroxide Feed	41
	9 Continuous Backwash Filter	43
	10. Polishing Filters	51
	11. UV - Peroxide System	53
IV.	**Pumping, Piping & Hydraulics**	68
	1. Pumps	68
	2. Piping	74
V.	**Solids Treatment**	79
	1. Solids Treatment Process Flow Diagram	79
	2. Solids Dewatering System	81
	3. Incineration	83
	4. Solids Storage Facilities	88
VI.	**Material Balances**	95

DESIGN CALCULATIONS

TABLE OF CONTENTS (Cont'd)

		Page
VII.	**Landfill Cap Design**	98
1.	HELP Model	99
2.	Solids Storage	110
3.	CDF Storage Volume and Earthwork	113
4.	Stormwater Calculations and Pipe Design	118
5.	Rainwater Collected	124
6.	Drainage Channel Design	125
7.	Anchor Trench Drain Design	128
8.	Cap Stability Calculations	130
9.	Geonet Transmissivity	134D
VIII.	**Structural Calculations**	135

1/

DESIGN CRITERIA

Design Dredge Flow Rate:	2,100 GPM
Design Wastewater Flow:	350 GPM
Total Sediment Storage Volume:	20,000 CY
Equalization Volume (CDF #2):	540,000 gal.

Parameter	Influent	Effluent
PCB	4,000-10,000 ppm	<1 ppb
TSS	250 ppm	<10 ppm
pH	6 - 9	6 - 9

Description: **Cutterhead Hydraulic Suction Pipeline Dredge**

Size: Pump discharge of between 8 and 10 inches in diameter.

Capacity: Minimum capacity between 30 to 40 cubic yards (in-situ) per hour capable of pumping through 5,200 linear feet of pipeline with a static lift of 10 feet.

Flow Rate: 2,100 gpm

Dredge Operating Parameters:

Swing Speed - 50% of dredge capability
Cutterhead Speed - 50% of dredge capability
Dredge Pump Speed - Run at maximum rpm
Advance per Swing - Two feet (cutterhead diameter)
Swing Anchors - Place on shore
Depth of Cut - Sufficient to remove top one foot of sediment with each pass

The ERM Group

ERM-New England, Inc. 205 Portland Street • Boston, Massachusetts 02114 • (617) 742-8228

Project USACE - NEW BEDFORD HOT SPOTS W.O. No. 208-01-05 Sheet 1 of
Subject DREDGING OPERATIONS CALCULATIONS By JDF Date 2/14/91
Chkd. by Date

BASIS: 10,000 cy OF SEDIMENTS (IN-SITU) TO BE DREDGED

3 TO 4 HOURS PER DAY AVAILABLE TIME FOR DREDGING

DREDGE WILL HAVE A MINIMUM OUTPUT OF 30-40 CY (IN SITU) PER HOUR

SOLIDS CONTENT IN PLACE = 35 %

(REFER TO TABLE A3 NEW BEDFORD HARBOR SUPERFUND PROJECT, ACUSHNET RIVER ESTUARY ENGINEERING FEASIBILITY STUDY OF DREDGING AND DREDGED MATERIAL DISPOSAL ALTERNATIVES, REPORT 3, CHARACTERIZATION AND ELUTRIATE TESTING OF ACUSHNET RIVER ESTUARY SEDIMENT, MARCH 89)

SOLIDS CONTENT EXPECTED IN CDF INFLUENT = 70 TO 140 g/l (p18 ABOVE)

SOLIDS CONTENT EXPECTED IN CDF BOTTOMS = 25% (ASSUMED)

ESTIMATE OF DREDGE PUMPING RATE (MINIMUM)

$$(40\ CY/HR)(350\ gm/l) = (X\ CY/HR)(140\ g/l)$$

$$X = 100\ CY/HR$$

$$= 337\ GAL/MIN$$

ESTIMATE DREDGE PUMPING RATE AT 2100 GPM

$$(2100\ GPM)(140\ gm/LT)(3.785\ LT/GAL) = 1,112,790\ GRAM/MINUTE$$

$$= 2,450\ \#/MINUTE$$

FOR TYPICAL DREDGE CYCLE (ASSUME 3.5 HOURS)

$$\text{SOLIDS TRANSFERRED} = (2,450\#/MIN)(3.5\ HRS)(60\ MIN/HR)$$

$$= 514,500\ \#/DAY$$

$$= 257.3\ TONS/DAY$$

ESTIMATE 80 DAYS OF DREDGING

$$\text{SOLIDS TRANSFERRED} = (2,450\#/MIN)(3.5\ HRS)(60\ MIN/HR)(80\ DAYS)$$

$$= 41,160,000\ \#$$

$$= 20,580\ TONS$$

ERM-New England, Inc. 205 Portland Street • Boston, Massachusetts 02114 • (617) 742-8228

Project USACE - NEW BEDFORD HOT SPOTS W.O. No. 208-01-05 Sheet 2 of

Subject DREDGING OPERATIONS CALCULATIONS By JDF Date 2/15/91

Chkd. by Date

ESTIMATE VOLUME OF SEDIMENTS REMOVED

$$\text{VOLUME OF SEDIMENTS} = (20{,}580 \text{ TONS})(2000\,\#/\text{TON})(1 \text{ LIT}/350 \text{ GM})(454 \text{ GM}/\#) \times (1.308 \times 10^{-3} \text{ CY/LIT})$$

$$= 79{,}811.0 \text{ CY}$$

ERM-New England, Inc. 205 Portland Street • Boston, Massachusetts 02114 • (617) 742-8228

Project USACE - NEW BEDFORD HOT SPOTS W.O. No. 208-01-05 Sheet 3 of
Subject DREDGING OPERATIONS By JDF Date
Chkd. by Date

DAY 1

CDF EMPTY

START DREDGING AT 2100 GPM FOR 4 HRS

VOLUME DELIVERED TO CDF

$(2100\ GPM)(4\ HR)(60\ MIN/HR) = 504{,}000\ GAL$

SOLIDS DELIVERED TO CDF

$(2100\ GPM)(4\ HR)(60\ MIN/HR)(30\ GM/LIT)(2.205\times10^{-3}\ \#/GM)(3.785\ LIT/GAL)$

$= 126{,}190.4\ \#/DAY$

6/

Wastewater Treatment Process Flow Diagram

7/

ERM-New England, Inc.

205 Portland Street • Boston, Massachusetts 02114 • (617) 742-8228

Project New Bedford Hot Spots W.O. No. 203-01-09 Sheet 1 of 1

Subject Liquid Treatment Process Flow Diagram By DJM Date 6/14/91

Chkd. by DF Date 8/27/91

OF 11/15/91

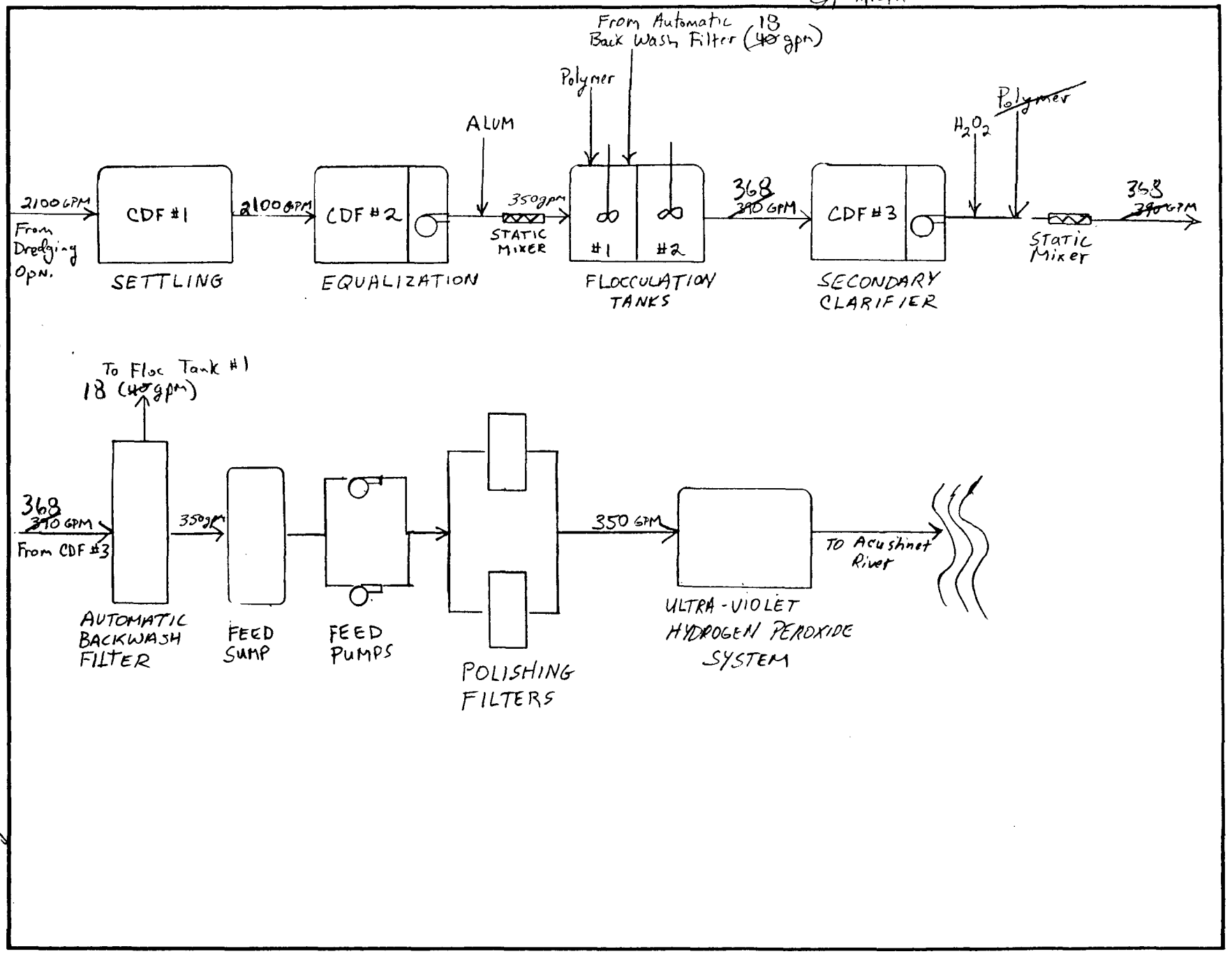

Description: **CDF Cell No. 1**

Area: 72,000 sf

Capacity: 5,200,000 gallons

Operating Parameters:

Bottom Elevation:	5.5 ft.
Top Elevation	15 ft.
Max. Operating Level	13 ft.
Min. Operating Level	10.5 ft.
Effluent Control	Adjustable Weir
Floating Product Control	Floating Booms, Skimmers
Min. Freeboard	2 ft.
Max. Flow Rate Out	2,100 gpm
Max. Solids Storage Volume	15,000 cy

The ERM Group

ERM-New England, Inc. 205 Portland Street • Boston, Massachusetts 02114 • (617) 742-8228

Project New Bedford Hot Spot Remediation W.O. No. 208-01-09 Sheet 1 of
Subject Design Basis By DJM Date 6/17/91
Required Volume of CDF #1 Chkd. by JDF Date 8/27/91

Basis – See Attached Sheet by JDF – 5/1/91

Assumptions
1. ~~incoming~~ in-situ Solids – 40%
2. Average Pump Rate – 2,100 GPM
3. Daily Dredge Period = 3.5 hrs per day
4. In-situ Volume – 10,000 c.y.

Required Storage Volume in CDF #1 – 40%

Liquid Volume/day = $(2100\ GPM)\left(\frac{3.5\ hrs}{day}\right)\left(\frac{60\ min}{1\ hr}\right)\left(\frac{1\ ft^3}{7.48\ gal}\right) = 58{,}957\ ft^3$

CDF#1 must be able to hold 80 days settled solid plus liquid volume/day.

Settled Solid (40%) = 10,900 cy. (From JDF calc.)

$(10{,}900\ cy)\left(\frac{27\ ft^3}{1\ cy}\right) + 58{,}957\ ft^3 = 353{,}257\ ft^3$

say 353,300 ft^3

CDF #1 proposed volume = 19,965 c.y (From JDF calc. sheet)

19,965 c.y = 539,055 ft^3 which is greater than 353,300 ft^3 required volume. therefore, proposed volume is okay.

Required Storage Volume in CDF#1 – 70%

Liquid Volume = 58,957 ft^3

Total Settled Solids (70%) = 19,100 c.y. or 515,700 ft^3 (From JDF calc Sheet)

Total required volume @ day 80 = 58,957 ft^3 + 515,700 ft^3 = 574,657 ft^3 which is greater than the proposed volume of 539,055 ft^3.

∴ HOWEVER, SOLIDS CONCENTRATION IN ESTUARY IS ONLY ESTIMATED TO BE ABOUT 40% BASED ON FIELD DATA. ALSO, PREVIOUS STUDIES INDICATE SLUDGE/BOTTOM SEDIMENTS HAVE A EXPANSION FACTOR OF 40%, THEREFORE VOLUME OK.

ERM-New England, Inc. 205 Portland Street • Boston, Massachusetts 02114 • (617) 742-8228

Project NEW BEDFORD HOT SPOT REMEDIATION W.O. No. 208-01-08 Sheet 1 of 5
Subject DESIGN BASIS By JDF Date 5/1/91
CDF CELL NO. 1 SUMMARY SHEET Chkd. by FS Date 5/2/91

DREDGING OPERATION

	AVERAGE	PEAK (MAXIMUM)
DREDGE PUMPING RATE (GPM)	2,100	2,100
DAILY DREDGING PERIOD (HRS)	3.5	6.0
DREDGE WASTEWATER SOLIDS CONCENTRATION (%)	2.0	3.5
DREDGE SOLIDS TRANSFER TO CDF (#/DAY)	88,270	264,812
(TONS/DAY)	44.1	132.4
SOLIDS STORAGE VOLUME REQUIRED IN CDF FOR 30 DAYS (CY)	13,000	15,000
AVAILABLE SEDIMENT STORAGE (CY)	AVERAGE DAILY FLOW 17,800	PEAK DAILY FLOW 16,200

CDF AS PRESENTLY DESIGNED HAS SUFFICIENT VOLUME TO STORE ESTIMATED VOLUME OF SEDIMENT MATERIAL BASED ON 10,000 CY IN-SITU (ESTIMATED)

ERM-New England, Inc. 205 Portland Street • Boston, Massachusetts 02114 • (617) 742-8228

Project NEW BEDFORD HOT SPOTS REMEDIATION W.O. No. 208-01-08 Sheet 2 of 5
Subject DESIGN BASIS By JDF Date 5/1/91
CDF CELL NO. 1 Chkd. by FS Date 5/2/91

BASIS: IN-SITU VOLUME OF PCB-CONTAMINATED SEDIMENTS IN ESTUARY = 10,000 CY
IN-SITU SOLIDS CONTENT 40 TO 70% BY WEIGHT
(REFER TO P. 5-1 OF FS REPORT)

DREDGING OPERATIONS
AVERAGE PUMP RATE = 2,100 GPM
DURATION OF DREDGING = 80 DAYS
DAILY DREDGE PERIOD
AVERAGE = 3.5 HRS/DAY
PEAK = 6 HRS/DAY

ASSUMPTIONS
SPECIFIC GRAVITY OF SOLIDS = 1.2
SOLIDS REMOVAL IN CDF = 98%
SOLIDS CONCENTRATION IN SETTLED CDF MATERIAL = 30%

REQUIRED STORAGE VOLUME IN CDF AT AN IN-SITU SOLIDS CONTENT OF 40%

$$\text{INCOMING SOLIDS} = \frac{0.4}{1.2}(10{,}000\ CY) = 3{,}333\ CY$$

SETTLED SOLIDS AT 30%

$$\text{VOLUME} = \frac{0.98(3{,}333\ CY)}{0.30} = 10{,}888\ CY \quad \text{SAY } 10{,}900\ CY$$

AVERAGE PERCENT SOLIDS IN CDF INFLUENT

$$\frac{(3{,}333\ CY)(27\ CF/CY)(7.48\ GAL/CF)(1.2)}{(80\ DAYS)(4\ HRS/DAY)(60\ MIN/HR)(2{,}100\ GAL/MIN)} \times (100)$$

$$= 2\%\ \text{SOLIDS}$$

REQUIRED STORAGE VOLUME IN CDF AT AN IN-SITU SOLIDS CONTENT OF 70%

$$\text{INCOMING SOLIDS} = \frac{0.7}{1.2}(10{,}000\ CY) = 5{,}833\ CY$$

SETTLED SOLIDS (30%)

$$\text{VOLUME} = \frac{0.98\ (5{,}833\ CY)}{0.30} = 19{,}054.5\ CY \quad \text{SAY } 19{,}100\ CY$$

AVERAGE PERCENT SOLIDS IN INFLUENT

$$\frac{(5{,}833\ CY)(27\ CF/CY)(7.48\ GAL/CF)(1.2)}{(80\ DAYS)(240\ MIN/DAY)(2{,}100\ GAL/MIN)} \times 100$$

ERM-New England, Inc. 205 Portland Street • Boston, Massachusetts 02114 • (617) 742-8228

Project NEW BEDFORD HOT SPOTS REMEDIATION W.O. No. 208-01-08 Sheet 3 of 5
Subject DESIGN BASIS By JDF Date 5/1/91
CDF CELL NO. 1 Chkd. by FS Date 5/2/91

= 3.5 % SOLIDS

SOLIDS TRANSFERRED PER DAY

ASSUMES 3.5 HRS OF DREDGING
PUMPING RATE = 2100 GPM
SOLIDS CONCENTRATION = 2%

SOLIDS = (2100 GPM)(0.02)(1.2 #/#)(8.34 #/GAL)(3.5 HRS)(60 MIN/HR)
= 88,270 #/DAY
= 44.1 TONS/DAY SOLIDS AVERAGE

ASSUMES 6 HRS OF DREDGING
PUMPING RATE = 2100 GPM
SOLIDS CONCENTRATION = 3.5%

SOLIDS = (2100 GPM)(0.035)(1.2 #/#)(8.34 #/GAL)(6 HRS)(60 MIN/HR)
= 264,812 #/DAY
= 132.4 TONS/DAY SOLIDS PEAK

ERM-New England, Inc. 205 Portland Street • Boston, Massachusetts 02114 • (617) 742-8228

Project NEW BEDFORD HOT SPOTS REMEDIATION W.O. No. 208-01-08 Sheet 4 of 5
Subject DESIGN BASIS By JDF Date 5/1/91
Chkd. by FS Date 5/2/91

CDF CELL NO. 1 CONFIGURATION (REFER TO ATTACHED FIGURE)
(BASED ON SITE PREPARATION CONTRACT BY USACE-NED APRIL 1991 - 90% SUBMITTAL)

FINISHED BOTTOM ELEVATION = 5.5 FT
TOP OF BERM/DIVIDING WALL ELEVATION = 15.0 FT
REQUIRED FREEBOARD = 2 FT
WIDTH OF CDF = 230 FT
LENGTH MAXIMUM = 340 FT
MINIMUM = 285 FT

TOTAL STORAGE VOLUME

$$\left(\frac{340\,FT + 285\,FT}{2}\right)(230\,FT)(15\,FT - 5.5\,FT) = 682{,}812.5\ CF$$
$$= \underline{\underline{25{,}290\ CY}}$$

USABLE VOLUME

$$\left(\frac{340\,FT + 285\,FT}{2}\right)(230\,FT)(15\,FT - 2\,FT - 5.5\,FT) = 539{,}063\ CF$$
$$= \underline{\underline{19{,}965\ CY}}$$

VOLUME FOR STORAGE OF SEDIMENT MATERIAL

USABLE VOLUME MINUS AVERAGE DAYS DREDGE WASTEWATER VOLUME

$$19{,}965\,CY - (441{,}000\ GAL/DAY)(1\,CF/7.48\,GAL)(1\,CY/27\,CF) = \underline{\underline{17{,}780\ CY}}$$

AVERAGE DREDGE DAY

$$19{,}965\ CY - (756{,}000\ GAL/DAY)(1\,CF/7.48\,GAL)(1\,CY/27\,CF) = \underline{\underline{16{,}222\ CY}}$$

PEAK DREDGE DAY

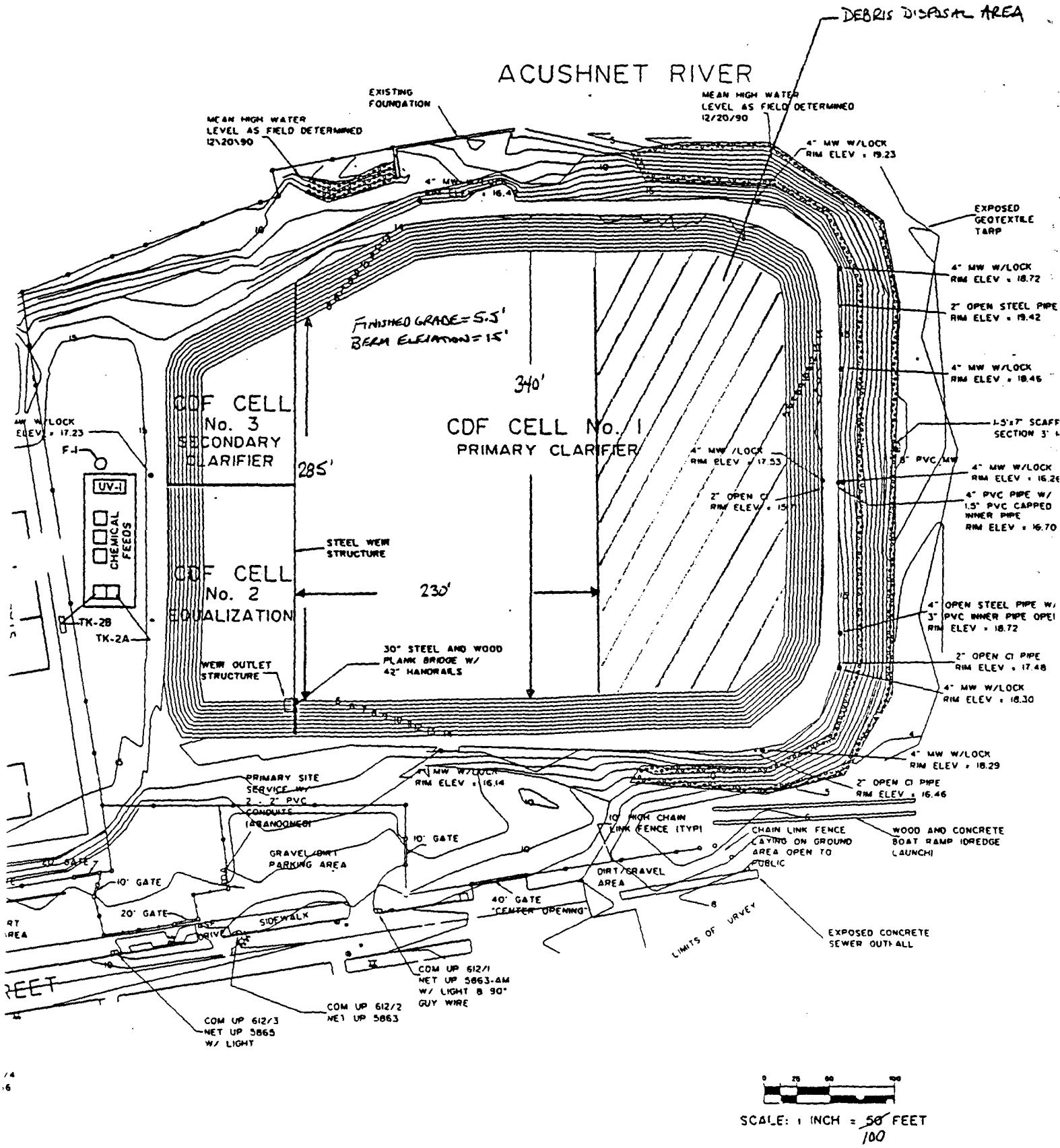
DEBRIS DISPOSAL AREA
ACUSHNET RIVER
EXISTING FOUNDATION
MEAN HIGH WATER LEVEL AS FIELD DETERMINED 12\20\90
MEAN HIGH WATER LEVEL AS FIELD DETERMINED 12/20/90
4" MW W/LOCK RIM ELEV = 19.23
4" MW W/LOCK RIM ELEV = 16.4
EXPOSED GEOTEXTILE TARP
4" MW W/LOCK RIM ELEV = 18.72
2" OPEN STEEL PIPE RIM ELEV = 19.42
4" MW W/LOCK RIM ELEV = 18.46
FINISHED GRADE = 5.5'
BERM ELEVATION = 15'
340'
CDF CELL No. 3 SECONDARY CLARIFIER
CDF CELL No. 1 PRIMARY CLARIFIER
285'
4" MW W/LOCK RIM ELEV = 17.23
F-1
UV-1
CHEMICAL FEEDS
4" MW /LOCK RIM ELEV = 17.53
2" OPEN CI RIM ELEV = 15.7
4" MW W/LOCK RIM ELEV = 16.26
4" PVC PIPE W/ 1.5" PVC CAPPED INNER PIPE RIM ELEV = 16.70
STEEL WEIR STRUCTURE
CDF CELL No. 2 EQUALIZATION
230'
TK-2B
TK-2A
4" OPEN STEEL PIPE W/ 3" PVC INNER PIPE OPEN RIM ELEV = 18.72
30" STEEL AND WOOD PLANK BRIDGE W/ 42" HANDRAILS
WEIR OUTLET STRUCTURE
2" OPEN CI PIPE RIM ELEV = 17.48
4" MW W/LOCK RIM ELEV = 18.30
4" MW W/LOCK RIM ELEV = 18.29
4" MW W/LOCK RIM ELEV = 16.14
2" OPEN CI PIPE RIM ELEV = 16.46
PRIMARY SITE SERVICE W/ 2 - 2" PVC CONDUITS (ABANDONED)
10' HIGH CHAIN LINK FENCE (TYP)
CHAIN LINK FENCE LAYING ON GROUND AREA OPEN TO PUBLIC
WOOD AND CONCRETE BOAT RAMP (DREDGE LAUNCH)
10' GATE
GRAVEL/DIRT PARKING AREA
20' GATE
10' GATE
DIRT/GRAVEL AREA
40' GATE "CENTER OPENING"
20' GATE
SIDEWALK
DRIVE
LIMITS OF SURVEY
EXPOSED CONCRETE SEWER OUTFALL
COM UP 612/1 NET UP 5863-AM W/ LIGHT & 90' GUY WIRE
COM UP 612/2 NET UP 5863
COM UP 612/3 NET UP 5865 W/ LIGHT
0 25 50 100
SCALE: 1 INCH = 50/100 FEET

Description: **CDF Cell No. 2**

Area: 11,900 sf

Capacity: 540,000 gallons

Operating Parameters:

Max Operating Elevation	11.6 ft.
Min. Operating Elevation	5.5 ft.
Average Effluent Flow Rate	350 gpm
Maximum Solid Storage Volume	36,000 gallons

The ERM Group

ERM-New England, Inc. 205 Portland Street • Boston, Massachusetts 02114 • (617) 742-8228

Project NEW BEDFORD HOT SPOTS REMEDIATION W.O. No. 208-01-03 Sheet 1 of 4
Subject DESIGN BASIS By JDF Date 5/1/91
CDF CELL NO. 2 Chkd. by FS Date 5/2/91

BASIS

PEAK FLOW TO CDF CELL NO. 1 = 2100 GPM FOR 6 HOURS

AVERAGE FLOW TO CDF CELL NO. 1 = 2100 GPM FOR 3.5 HOURS

SIZE CDF CELL NO. 2 TO HOLD DAILY FLOW FROM DREDGE
UNDER THE FOLLOWING CONDITIONS
DREDGE MATERIAL NEEDS 8 HRS TO SETTLE

DESIGN VOLUMES

AVERAGE DAILY VOLUME = (2100 GPM)(3.5 HRS)(60 MIN/HR)
= 441,000 GALS

MAXIMUM DAILY VOLUME = (2100 GPM)(6 HR)(60 MIN/HR)
= 756,000 GALS

CAPACITY CDF CELL NO. 2

BOTTOM ELEVATION = 5.5 FT
TOP OF BERM ELEVATION = 15 FT
MAXIMUM WATER ELEVATION IN CDF CELL NO. 1 = 13 FT
OPERATING WATER ELEVATION IN CDF CELL NO. 1 (REFER TO SHEET NO. 2)
MAXIMUM HIGH WATER ELEVATION = 13 FT
MAXIMUM LOW WATER ELEVATION TO
MAINTAIN 756,000 GAL CAPACITY = 11.6 FT
MINIMUM LOW WATER ELEVATION TO
MAINTAIN WATER OVER SETTLED
SEDIMENT MATERIAL = 11.2 FT

DIMENSIONS OF CDF CELL NO. 2 (REFER TO ATTACHED FIGURE)
EFFECTIVE WIDTH = 70 FT
EFFECTIVE LENGTH = 170 FT

AREA = (170 FT)(70 FT) = 11,900 SF

VOLUME AT WATER ELEVATION 11.2 FT

(11,900 SF)(11.2 FT - 5.5 FT) = 67,830 CF
= 507,370 GALLONS

VOLUME AT WATER ELEVATION 11.6 FT

(11,900 SF)(11.6 FT - 5.5 FT) = 72,590 CF
= 543,000 GALLONS

ERM-New England, Inc. 205 Portland Street • Boston, Massachusetts 02114 • (617) 742-8228

Project NEW BEDFORD HOT SPOTS REMEDIATION W.O. No. 208-01-08 Sheet 2 of 4
Subject DESIGN BASIS By JDF Date 5/1/91
Chkd. by FS Date 5/2/91

OPERATING LEVELS IN CDF CELL NO. 1

MAXIMUM HIGH WATER ELEVATION

BERM ELEVATION MINUS REQUIRED FREEBOARD

$15' - 2' = 13'$

MAXIMUM LOW WATER ELEVATION TO MAINTAIN 756,000 GAL CAPACITY
(CAPACITY FOR 6 HR DREDGE DAY)

CDF CELL NO. 1 AREA =

$$\left(\frac{285\,FT + 340\,FT}{2}\right)(230\,FT) = 71{,}875\ SF$$

DEPTH REQUIRED TO EQUAL THIS VOLUME

$$\frac{756{,}000\ GAL\ (1\ CF/7.48\ GAL)}{71{,}875\ SF} = 1.4\ FT$$

ELEVATION = 15 FT − 2 FT − 1.4 FT = 11.6 FT

MINIMUM LOW WATER ELEVATION TO MAINTAIN WATER COVER
OVER SETTLED SEDIMENT MATERIAL IN THE CDF

PEAK VOLUME OF MATERIAL TO BE STORED IN CDF = 15,000 CY

(1) $$\frac{(15{,}000\ CY)(27\ CF/1\ CY)}{71{,}875\ SF} = 5.63\ FT$$ DEPTH NEEDED TO STORE VOLUME OF SETTLED MATERIAL

AVERAGE VOLUME OF MATERIAL TO BE STORED IN CDF = 13,000 CY

(1) $$\frac{(13{,}000\ CY)(27\ CF/1\ CY)}{71{,}875\ SF} = 4.88\ FT$$ DEPTH NEEDED TO STORE VOLUME OF SETTLED MATERIAL

ELEVATION OF SETTLED MATERIAL (BASED ON 15,000 CY VOLUME)

INVERT ELEVATION + ELEVATION OF SETTLED MATERIAL

5.5 FT + 5.63 FT = 11.13 SAY 11.2 FT

(1) NOTE: SLUDGE STORAGE VOLUME IS BASED ON USACE-NED EVALUATION OF EXPANSION COEFFICIENT OF APPROXIMATELY 40%. THEREFORE TOOK PEAK AT 50% AND AVERAGE AT 30%.

ERM-New England, Inc. 205 Portland Street • Boston, Massachusetts 02114 • (617) 742-8228

Project NEW BEDFORD HOT SPOTS REMEDIATION W.O. No. 209-01-08 Sheet 3 of 4
Subject DESIGN BASIS By JDF Date 5/1/91
Chkd. by FS Date 5/2/91

VOLUME AT WATER ELEVATION 11.2 FT WITH 1 FT FOR SOLIDS

(11,900 SF)(11.2 FT - 5.5 FT - 1 FT) = 55,930 CF

= 418,360 GALLONS

VOLUME AT WATER ELEVATION 11.6 FT WITH 1 FT FOR SOLIDS

(11,900 SF)(11.6 FT - 5.5 FT - 1 FT) = 60,690 CF

= 454,000 GALLONS

BASED ON ABOVE INFORMATION, THE EQUALIZATION BASIN IS SUFFICIENTLY SIZED TO HANDLE THE AVERAGE DAILY FLOW OF 441,000 GALLONS. HOWEVER, SHOULD THE PEAK FLOW CONDITION OF 756,000 GALLONS OCCUR, THE VOLUME ABOVE 418,360 GALLONS (756,000 GALLONS − 418,360 GALLONS = 337,640 GALLONS) WILL NEED TO BE STORED IN CDF CELL NO. 1.

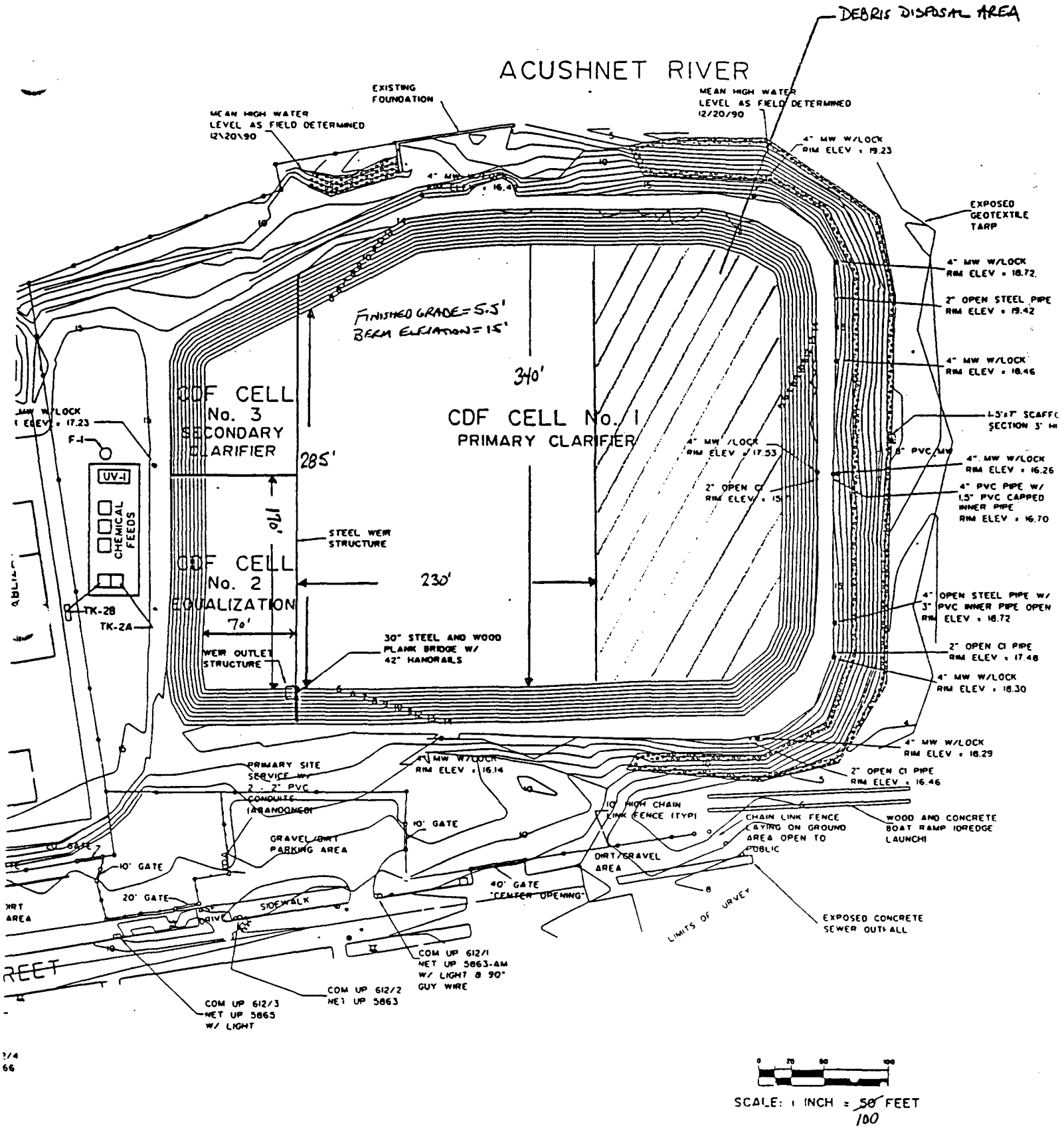
DEBRIS DISPOSAL AREA
ACUSHNET RIVER
EXISTING FOUNDATION
MEAN HIGH WATER LEVEL AS FIELD DETERMINED 12\20\90
MEAN HIGH WATER LEVEL AS FIELD DETERMINED 12/20/90
4" MW W/LOCK RIM ELEV = 19.23
EXPOSED GEOTEXTILE TARP
4" MW W/LOCK RIM ELEV = 18.72
2" OPEN STEEL PIPE RIM ELEV = 19.42
4" MW W/LOCK RIM ELEV = 18.46
FINISHED GRADE = 5.5'
BERM ELEVATION = 15'
340'
CDF CELL No. 3 SECONDARY CLARIFIER
CDF CELL No. 1 PRIMARY CLARIFIER
285'
170'
STEEL WEIR STRUCTURE
CDF CELL No. 2 EQUALIZATION
230'
70'
WEIR OUTLET STRUCTURE
30" STEEL AND WOOD PLANK BRIDGE W/ 42" HANDRAILS
F-1
UV-1
CHEMICAL FEEDS
TK-2B
TK-2A
4" MW W/LOCK RIM ELEV = 17.53
2" OPEN CI RIM ELEV = 15.
4" MW W/LOCK RIM ELEV = 16.26
4" PVC PIPE W/ 1.5" PVC CAPPED INNER PIPE RIM ELEV = 16.70
4" OPEN STEEL PIPE W/ 3" PVC INNER PIPE OPEN RIM ELEV = 16.72
2" OPEN CI PIPE RIM ELEV = 17.48
4" MW W/LOCK RIM ELEV = 18.30
4" MW W/LOCK RIM ELEV = 18.29
2" OPEN CI PIPE RIM ELEV = 16.46
4" MW W/LOCK RIM ELEV = 16.14
PRIMARY SITE SERVICE W/ 2 - 2" PVC CONDUITS (ABANDONED)
10' GATE
GRAVEL/DIRT PARKING AREA
10' HIGH CHAIN LINK FENCE (TYP)
CHAIN LINK FENCE LAYING ON GROUND AREA OPEN TO PUBLIC
WOOD AND CONCRETE BOAT RAMP (DREDGE LAUNCH)
DIRT/GRAVEL AREA
40' GATE "CENTER OPENING"
20' GATE
SIDEWALK
LIMITS OF SURVEY
EXPOSED CONCRETE SEWER OUTFALL
COM UP 612/1 NET UP 5863-AM W/ LIGHT & 90" GUY WIRE
COM UP 612/2 NET UP 5863
COM UP 612/3 NET UP 5865 W/ LIGHT
SCALE: 1 INCH = ~~50~~ 100 FEET

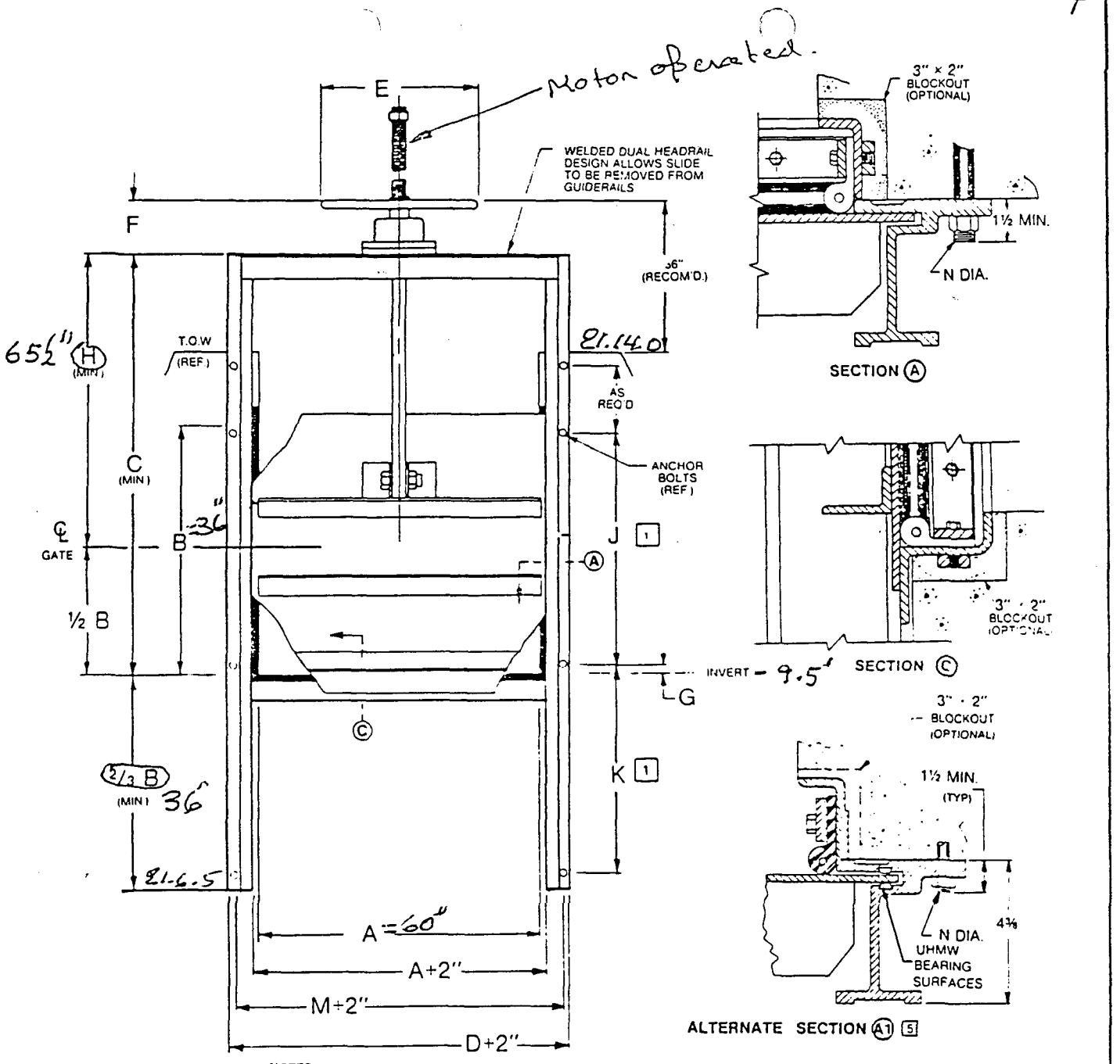

NOTES:

1. DIMENSIONS "J" & "K" ARE THE NUMBER OF SPACES AND THE DIMENSION BETWEEN ANCHOR BOLTS, RESPECTIVELY, AS LOCATED FROM ANCHOR BOLT SHOWN.
2. SEE DWG. NO. 0004, PGS. 1 THRU 3 FOR DIMENSION TABLES.
3. "J" — BULB SEALS ARE SLIGHTLY ADJUSTABLE AND VULCANIZED AT CORNERS.
4. FOR SEATING AND UNSEATING HEADS TO HEIGHT OF GATE.
5. ALTERNATE GATE MODEL APR-5fj-IY WITH UHMW POLYETHYLENE BEARING STRIPS.

MODEL	AR-5fj-IY DOWNWARD OPENING (WEIR) ALUMINUM SLIDE GATE WITH J-BULB SEAL		
SCALE	CATALOG DWG. NO.		REVISION NO.
NONE	0004	6 of 6	3

Waterman INDUSTRIES, INC.

EXETER, CA • LUBBOCK, TX • GARDEN CITY, KS • BOISE, ID
MEMPHIS, TN • GRAND ISLAND, NB • INDIANAPOLIS, IN
RED TOP WATER CONTROL GATES, VALVES and EQUIPMENT

NOTE: FOR PRELIMINARY DESIGN PURPOSES ONLY
DO NOT USE FOR INSTALLATION
UNLESS PART OF CERTIFIED & APPROVED SUBMITTAL

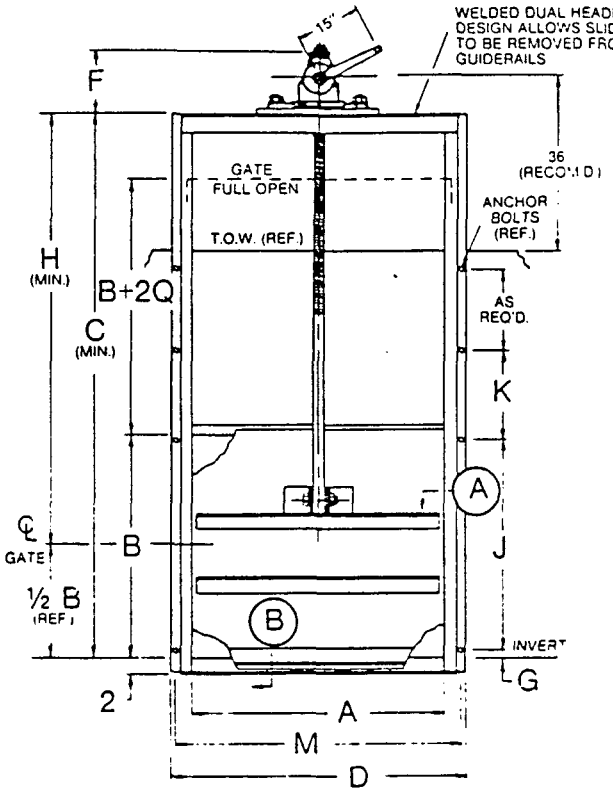

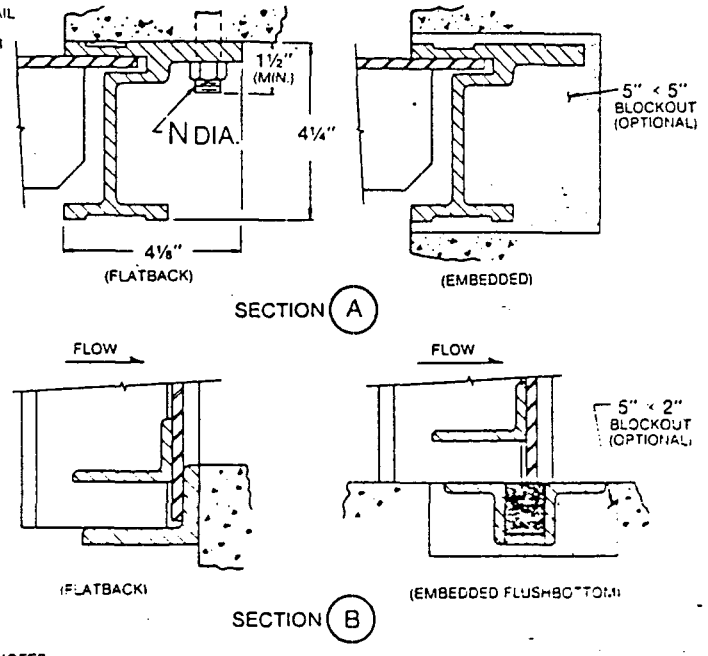

NOTES:

1. DIMENSIONS "J" & "K" ARE THE NUMBER OF SPACES AND THE DIMENSION BETWEEN ANCHOR BOLTS, RESPECTIVELY, AS LOCATED FROM ANCHOR BOLT SHOWN.
2. BB DENOTES LIFT WITH BALL BEARINGS AND 3E-2:1 DENOTES LIFT WITH HANDCRANK. SEE PAGE 3 FOR GATE SHOWN WITH HANDCRANK LIFT.

GATE DIMENSIONS IN INCHES

A × B	C	D	E [2]	F	G	H	J [1]	K [1]	M	N
48 × 48	H + 24	56¼	30 BB	6½	1½	78	3 @ 15	2 @ 16	54¾	⅝
48 × 54	H + 27	56¼	3E-2:1	6½	1	90	4 @ 13	2 @ 18	54¾	⅝
48 × 60	H + 30	56¼	3E-2:1	10	2	96	4 @ 14	2 @ 21	54¾	⅝
48 × 72	H + 36	56¼	3E-2:1	10	2	114	4 @ 17	2 @ 24	54¾	⅝
54 × 30	H + 15	62¼	24 BB	6½	1	54	2 @ 14	1 @ 20	60¾	⅝
54 × 36	H + 18	62¼	24 BB	6½	1	60	2 @ 17	2 @ 14	60¾	⅝
54 × 42	H + 21	62¼	30 BB	6½	1½	72	3 @ 13	2 @ 15	60¾	⅝
54 × 48	H + 24	62¼	3E-2:1	6½	1½	84	3 @ 15	2 @ 16	60¾	⅝
54 × 54	H + 27	62¼	3E-2:1	10	1	90	4 @ 13	2 @ 18	60¾	⅝
54 × 60	H + 30	62¼	3E-2:1	10	2	96	4 @ 14	2 @ 21	60¾	⅝
54 × 72	H + 36	62¼	3E-4:1	10	2	114	4 @ 17	2 @ 24	60¾	⅝
60 × 30	H + 15	68¼	24 BB	6½	1	54	2 @ 14	1 @ 20	66¾	⅝
60 × 36	H + 18	68¼	30 BB	6½	1	60	2 @ 17	2 @ 14	66¾	⅝
60 × 42	H + 21	68¼	3E-2:1	6½	1½	72	3 @ 13	2 @ 15	66¾	⅝
60 × 48	H + 24	68¼	3E-2:1	10	1½	78	3 @ 15	2 @ 16	66¾	⅝
60 × 54	H + 27	68¼	3E-2:1	10	1	90	4 @ 13	2 @ 18	66¾	⅝
60 × 60	H + 30	68¼	3E-2:1	10	2	96	4 @ 14	2 @ 21	66¾	⅝
60 × 72	H + 36	68¼	3E-4:1	10	2	114	4 @ 17	2 @ 24	66¾	⅝
72 × 36	H + 18	80¼	3E-2:1	6½	1	60	2 @ 17	2 @ 14	78¾	⅝
72 × 42	H + 21	80¼	3E-2:1	10	1½	72	3 @ 13	2 @ 15	78¾	⅝
72 × 48	H + 24	80¼	3E-2:1	10	1½	78	3 @ 15	2 @ 16	78¾	⅝
72 × 54	H + 27	80¼	3E-2:1	10	1	90	4 @ 13	2 @ 18	78¾	⅝
72 × 60	H + 30	80¼	3E-2:1	10	2	96	4 @ 14	2 @ 21	78¾	⅝
72 × 72	H + 36	80¼	3E-2:1	11¼	2	114	4 @ 17	2 @ 24	78¾	⅝

MODEL	AR-5f-Y & AR-5e-Y EXTRUDED ALUMINUM SLIDE GATES		
SCALE	CATALOG DWG. NO.		REVISION NO.
NONE	0004	3 of 6	3

Waterman INDUSTRIES, INC.

EXETER, CA • LUBBOCK, TX • GARDEN CITY, KS • ROSE HILL, KS
MEMPHIS, TN • GRAND ISLAND, NE • INDIANAPOLIS, IN
RED TOP WATER CONTROL GATES, VALVES and EQUIPMENT

NOTE: FOR PRELIMINARY DESIGN PURPOSES ONLY
DO NOT USE FOR INSTALLATION
UNLESS PART OF CERTIFIED & APPROVED SUBMITTAL

Description: **Flocculation Tank**

Number: 2 in series

Size: 9 ft. x 9 ft. x 7 ft.

Capacity: 3,030 gallons each

Operating Parameters:

Detention Time	15 minutes total
Mixers	2
Solids Removal	20 gpm
Influent Flow Rate	368 ~~390~~ gpm 11/15/91
Material of Construction	316 st. stl.

The ERM Group

ERM-New England, Inc. 205 Portland Street • Boston, Massachusetts 02114 • (617) 742-8228

Project NEW BEDFORD HOT SPOTS REMEDIATION W.O. No. 208-01-03 Sheet 1 of 1
Subject DESIGN BASIS By JDF Date 5/1/91
FLOCCULATION CHAMBER Chkd. by FS Date 5/2/91

BASIS:

REQUIRED DETENTION TIME = 15 MINUTES

FORWARD FLOW
350 GPM FROM EQUALIZATION TANK (CELL NO. 2)
18 ~~40~~ GPM FROM SAND FILTER RECYCLE
= ~~390~~ GPM ~~368~~

VOLUME REQUIRED = ~~390~~ 368 GPM (15 MIN)
5,520 ~~= 5,850~~ GALLONS

ASSUME TWO UNITS IN SERIES – EACH UNIT TO HAVE A DETENTION TIME OF 7.5 MINUTES

ASSUME 5 FT SIDE WATER DEPTH WITH 2 FT FREEBOARD
ASSUME EACH CHAMBER SQUARE

DIMENSIONS OF EACH CHAMBER

VOLUME = L × W × H WHERE L = W

$$\left(\frac{1\,FT^3}{7.48\,GAL}\right)\left(\frac{\cancel{5,850}\ 5,520\ GALLONS}{2}\right) = L^2 \times 5\,FT$$

$$73.8\ \cancel{78}\ FT^2 = L^2$$

$$8.6\ \cancel{8.8}\ FT = L \qquad \text{SAY } 9\,FT$$

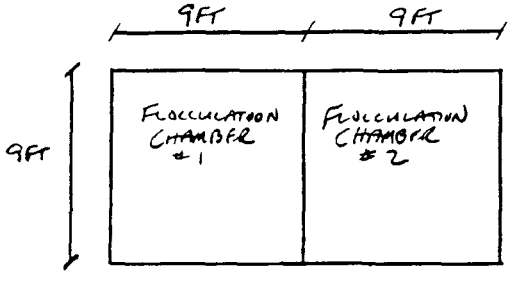

PLAN

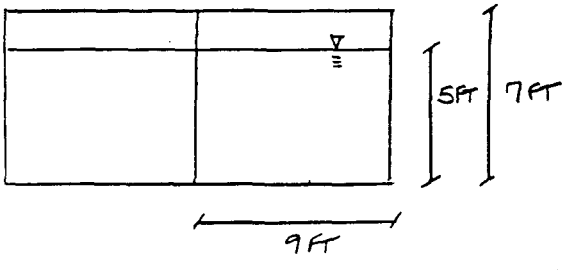

SECTION

NOTE: DRAWINGS NOT TO SCALE

THEREFORE FLOCCULATION TANKS TOGETHER ARE

9FT × 9FT × 7FT

Description: **Alum Feed System**

Size: Tote bins as required by contractor

Capacity: Minimum capacity required to dose wastewater stream at 25 ppm as aluminum sulfate.

Operating Parameters:

Pump Flow Rate	0 to 8 gph
Pump Horsepower	1/3 hp
Mixing	Static (SM-100)

The ERM Group

ERM-New England, Inc. 205 Portland Street • Boston, Massachusetts 02114 • (617) 742-8228

Project: New Bedford Hot Spots | W.O. No. 208-01-09 | Sheet 1 of
Subject: Alum Dosage | By: DJM | Date: 6/19/91
Chkd. by: JDF | Date: 8/27/91

Basis: The Optimum Alum dose from treatability study was 25 ppm. Strengths of Commercial Alum = 8.3%, Dry Alum = 5.4 lb/gal. Dose is 25 ppm as $Al_2(SO_4)_3$

Calculate the Chemical feed in pounds per day for the Alum dose of 25 ppm.

$$\text{Chemical Feed (lbs/day)} = (\text{Flow, MGD})(\text{Dose, mg/l})(8.34 \text{ lbs/gal})$$

$$= (350 \text{ g/min})\left(\frac{60 \text{ min}}{\text{hr}}\right)\left(\frac{24 \text{ hr}}{\text{day}}\right)\left(\frac{1}{10^6}\right)(25 \text{ mg/l})(8.34 \text{ lb/gal})$$

$$= 105 \text{ lbs/day or } 8407 \text{ lb/30 days}$$

$$\text{Feed Rate (GPD)} = \frac{\text{Chemical Feed (lbs/day)}}{\text{Chemical Solution (lbs/gal)}}$$

$$= \frac{105 \text{ lbs/day}}{5.4 \text{ lb/gal}}$$

$$= 19.44 \text{ gal/day or } .81 \text{ gal/hr}$$

ERM-New England, Inc. 205 Portland Street • Boston, Massachusetts 02114 • (617) 742-8228

Project NEW BEDFORD HOT SPOTS W.O. No. 209-[illegible] Sheet 1 of
Subject ALUM DOSAGE By JDF Date 3/27/9[illegible]
Chkd. by Date

BASIS: ANTICIPATED ALUM DOSE IS 25 PPM (AS $Al_2(SO_4)_3$)
STRENGTH OF COMMERICAL ALUM (AS Al_2O_3) IS 8.3%

MOLECULAR WEIGHT

$Al_2(SO_4)_3$

Al = 2 X 27 g/MOLE = 54 grams
S = 3 X 32 g/MOLE = 96 grams
O = 12 X 16 g/MOLE = 192 grams
342 grams

Al_2O_3

Al = 2 X 27 g/MOLE = 54 grams
O = 3 X 16 g/MOLE = 48 grams
102 grams

CHEMICAL DOSING RATE =

$$(25\ ppm)(350\ \tfrac{gal}{min})(1440\ \tfrac{min}{day})(8.34 \times 10^{-6}\ \tfrac{\#/day}{gal\ ppm})$$

= 105.1 #/DAY AS $Al_2(SO_4)_3$
= 8,407 #/80 DAYS AS $Al_2(SO_4)_3$

LIQUID ALUM FEED RATE =

$$\frac{\text{CHEMICAL FEED } \#/DAY}{\text{CHEMICAL SOLUTION } \#/GAL} = \frac{105.1\ \#/DAY \text{ AS } Al_2(SO_4)_3}{5.4\ \#/GAL \text{ AS } Al_2O_3 \left(\frac{342 \text{ grams } Al_2(SO_4)_3}{102 \text{ grams } Al_2O_3}\right)}$$

= 5.8 GAL/DAY OF 8.3% Al_2O_3 ALUM
= 0.24 GAL/HR OF 8.3% Al_2O_3 ALUM

FIGURE 4-1
TSS CONCENTRATIONS IN CLARIFIED SAMPLES

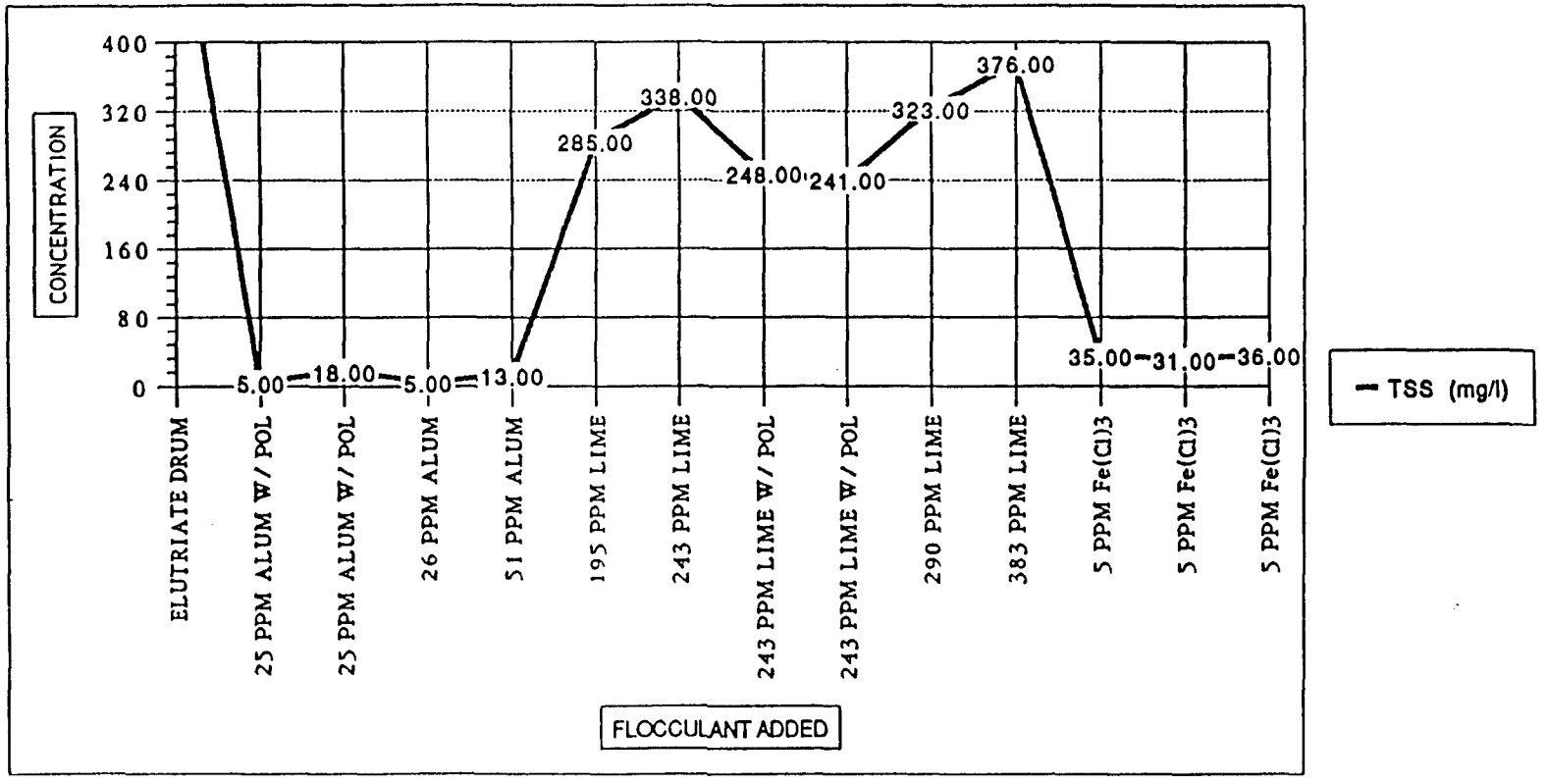

The ERM Group

bidity removal is primarily a function of wastewater alkalinity. Therefore, the most accurate evaluation of coagulation requirements may be made through the performance of a jar test on a representative sample of the specific wastewater.

5. Calcining. Lime sludge may be thickened, dewatered, and calcined to convert the calcium carbonate to re-usable lime. Generally, calcining for reuse is economical only in larger plants where flows are greater than 38 000 m^3/d (10 mgd). Although some investigators have reported that the slaking characteristics of lime deteriorate after it is calcined for reuse, other experiences have not shown this effect.[2]

Alum:—

1. Uses. Alum is the commonly used name for aluminum sulfate [$Al_2(SO_4)_3 \cdot 14 H_2O$]. It is widely used in water treatment practice but is also an excellent coagulant for removing suspended solids from domestic wastewater.

When a coagulant such as alum (or the iron salts) is to be incorporated in a new plant design, or used to improve BOD, suspended solids, and phosphorus removal in an existing plant, the question invariably arises as to where in the process flowsheet the chemical should be added. As a general rule, where no flash mix tanks are provided, alum should be added at a point where turbulence is present to insure rapid mixing. It is advantageous to build some flexibility into the plant design with respect to points of chemical addition, since this aspect may significantly affect process efficiency and economy. Addition of alum directly to an aeration tank will not adversely affect the biological process, but some build-up of aluminum compounds in the recirculated sludge may be expected.

TABLE 11-III. Strengths of Commercially Available Alum

Deg. Baumé	Alum Conc., % Al_2O_3	Density (lb/gal)	Dry Alum (lb/gal)
32.2	7.2	10.72	4.6
36.4	8.3	11.15	5.4

Note: lb/gal × 0.12 = kg/l.

TABLE 11-IV. Some Physical Characteristics of Dry Alum

Parameter	Alum Characteristics
Approx. composition	$Al_2(SO_4)_3 \cdot 14 H_2O$
Al_2O_3 content	17% (minimum)
Fe_2O_3	0.75% (maximum)
Insolubles	0.5% (maximum)
Hygroscopic	Very slightly
Form	Lump, ground, rice powder
Color	Ivory white
Weight (lb/cu ft):	
Lump	60–70
Ground	63–76
Rice	52–62
Powdered	38–45
Angle of repose (approx.):	
Ground	38–45 deg
Rice	33–38 deg
Powder	65 deg
Solubility [lb alum (17% Al_2O_3)/gal water]:	
32°F	7.9
60°F	8.4
100°F	9.1

Note: lb/cu ft × 16 = kg/m³; gal × 3.785 = l.

2. Types and handling considerations. Alum is available from chemical manufacturers in both liquid and dry form. Liquid alum is an aqueous solution of aluminum sulfate and is generally available commercially in two strengths (Table 11-III).

Liquid alum is a true solution containing less than 0.2 percent insolubles. Dry alum is a pale greenish- to cream-colored, powdered, granular, or lump material that dissolves in water to produce a solution with a pH of approximately 3.5 at 1 percent. The grade of dry alum used by the majority of water and wastewater plants is a mixture of standard ground alum and fines. In general, ground alum is easy to feed as it does not bulk or arch in hoppers. It is non-corrosive. The fines themselves are known as powdered alum. Powdered alum is generally not desirable for use in wastewater treatment since it is dusty and difficult to feed. Some physical properties

Description: **Polymer Blending Systems CF-100, CF-102**

Size: -

Capacity: -

Operating Parameters:

Automatic Water Feed and Mixing	
Mixers	Static
Flow Rate	0-2 gph neat polymer as required for solids removal

The ERM Group

ERM-New England, Inc. 205 Portland Street • Boston, Massachusetts 02114 • (617) 742-8228

Project: New Bedford Hot Spots | W.O. No. 208-01-05 | Sheet 1 of 2
Subject: Polymer Dosage | By: DJM | Date: 6/18/91
Chkd. by: JDF | Date: 8/27/91

① Compute polymer dosage rate to produce polymer concentration of 10 - 100 mg/l.

Assumptions ① Flow Rate = ~~390~~ 368 gpm
② 10 - 100 mg/l needed in flocculation tank.
③ Polymer Blending Unit generates 10 mg/mL soln.

Polymer Dosage, mg/min = (Flow, L/min)(Concentration, mg/L)

$$= (\cancel{390}\ 368\ \text{g/min})\left(\frac{3.785\,L}{1\,gal}\right)(10\ mg/l)$$

$$= \cancel{14{,}762}\ 13{,}929\ \text{mg polymer/min}$$

@ 100 mg/l ⇒ polymer dosage = ~~147,620~~ 139,288 mg/min

∴ polymer dosage is from ~~14,762~~ 13,929 to ~~147,620~~ 139,288 mg/min

② Calculate Polymer Feed Rate

$$\text{Polymer Feed Rate} = \frac{\text{Polymer Dosage, mg/min}}{\text{Polymer Concentration, mg/ml}}$$

at 10 mg/l, Feed Rate = $\frac{\cancel{14{,}762}\ 13{,}929\ \text{mg/min}}{10\ \text{mg/ml}} = \cancel{1476.2}\ 1392.9\ \text{ml/min}$

convert to gal/hr

$$(\cancel{1476.2}\ 1392.9\ \text{ml/min})\left(\frac{60\ \text{min}}{\text{hr}}\right)\left(\frac{1\ \text{gal}}{3{,}785\ \text{ml}}\right) = \cancel{23.4}\ 22.1\ \text{gal/hr.}$$

@ 100 mg/l, Feed Rate = $\frac{\cancel{147{,}620}\ 139{,}288\ \text{mg/min}}{10\ \text{mg/ml}} = \cancel{14{,}762}\ 13{,}928.8\ \text{ml/min}$

or ~~234~~ 220.8 gal/hr.

ERM-New England, Inc. 205 Portland Street • Boston, Massachusetts 02114 • (617) 742-8228

Project: New Bedford Hot Spots | W.O. No. 208-01-09 | Sheet 2 of 2
Subject: Polymer Dosage | By DJM | Date 6/18/91
Chkd. by JDF | Date 9/27/91

③ Calculate amount of polymer needed per day.

Total Volume treated = $(\cancel{390}\ 368\ gal/min)\left(\frac{60\ m}{1\ hr}\right)\left(\frac{24\ hr}{day}\right)$

$= \cancel{561,600}\ 529,920\ gals/day$

$= (\cancel{561,600}\ 529,920\ \frac{gal}{day})\left(\frac{3.785\ L}{1\ gal}\right) = \cancel{2,125,656}\ 2,005,747\ \frac{L}{day}$

For Polymer concentration of 10 mg/l

Polymer, lbs = (Polymer Concentration)(Volume)

$= (.01\ g/L)\left(\frac{1\ lb}{454\ g}\right)(\cancel{2,125,656}\ 2,005,747\ \frac{L}{day}) = \cancel{46.8}\ 44.2\ lb/day$

For Polymer concentration of 100 mg/l ⇒ $\cancel{468}$ 442 lb/day

11/15

<u>In Summary</u>

	10 mg/l	100 mg/l
Polymer Dosage Rate, mg/min	~~14,762~~ 1392.9	~~147,620~~ 139,288
Polymer Feed Rate, gal/hr	~~23.4~~ 22.1	~~234~~ 220.8
Polymer Usage Rate, #/d	~~46.8~~ 44.2	~~468~~ 442

11/15/91

4.3.3 Chemical Addition/Flocculation

The treatability studies indicated that the following chemical and flocculation treatment is recommended:

- Alum will be dosed at 25 ppm (as aluminum sulfate) to coagulate suspended solids and remove dissolved metals.

- Magnifloc 1596C, dosed at between 10 and 100 ppm, enhances flocculation of the coagulated material. This polymer may be added after rapid mixing of the inorganic coagulant (alum), but prior to the flocculation tank if it is deemed necessary to optimize operating parameters.

- Flocculation of 15 minutes is required to maximize flocculation of smaller coagulated particles.

- A portion of the flocculated material will form particles of sufficient size that they will settle in the flocculation tank under slow mixing conditions. The flocculation tank should be provided with an underdrain or other items for solids removal. Solids should be transferred to Cell No. 1 to be treated with the other solids.

4.3.4 Secondary Settling - Cell No. 3

Results of the treatability study indicate the treatment system should be designed for:

- The secondary settling cell should have a minimum 15 minutes detention time to ensure capture of settleable materials.

- The wastewater leaving the secondary clarifier will have very low suspended solids concentrations (below 10 mg/l).

33/

Magnifloc® 1596CSP

Flocculant

Type: Emulsion, Catonic

MAGNIFLOC 1596CSP flocculant is a very high molecular weight, highly charged cationic flocculant for use in sludge conditioning and waste treatment processes. Especially recommended for use in secondary clarification.

TYPICAL PROPERTIES

Appearance	Opaque liquid
Specific gravity	1.00 ± .04
Typical Bulk Viscosity as is, at 25°C (77°F)	500-1500 cps
Typical Solution Viscosity at 25°C, cps	
0.5% 300 (Brookfield spindle #3 at 60 rpm)	
1.0% 650 (Brookfield spindle #3 at 60 rpm)	
2.0% 1500 (Brookfield spindle #3 at 60 rpm)	
Freezing point	0°F (−18°C)
Flash point, Closed cup	200°F (93°C)
Shelf Life	6 months

Environmental Properties*

BOD_5	~540 mg/L
COD	~4,500 mg/L

*1% solution

ADVANTAGES

Economical
- Handling costs are minimized
- Effective at low dosage levels
- Performs well under high pH conditions

Convenient
- Helps maintain clean, safe, dissolving tank stations
- Easy to handle and feed
- Dissolves rapidly, leaving no insolubles ("fish eyes")
- Compatible with continuous automatic chemical feed systems
- Suitable for bulk storage

PRINCIPAL USES

MAGNIFLOC 1596CSP flocculant is a highly effective, high MW cationic polyelectrolyte which may be used as a coagulant, settling aid, or a dewatering aid. MAGNIFLOC 1596CSP flocculant is recommended for liquid-solids separation processes:

- Secondary Clarification - increases settling rate resulting in lower solids carryover.
- Belt Press, Screw Press and Vacuum Filtration - increases production rates, cake solids content, and solids capture.
- Centrifugation - increases throughput along with improved solids recovery.
- Sludge Thickening - improves sludge compaction, settling rates, and effluent water quality.

CYANAMID

American Cyanamid Company
Specialty Polymers Department
Paper Chemicals Department
Wayne, New Jersey 07470

WTT-1019

© Copyright 1989

Application

A stock solution of MAGNIFLOC 1596CSP flocculant should be metered to the system by use of a corrosion-resistant, positive-displacement pump and diluted 100:1 with clean water prior to being fed to the system. Best results are obtained by dispersing the feed stream and promoting high turbulence for rapid mixing beyond the addition point.

Preparation of Stock Solution

To ensure product uniformity, agitate MAGNIFLOC 1596CSP flocculant thoroughly in the drum with either a drum stirrer or a continuous recirculating pump.

For batch make-up, the sue of both a make-up tank and a holding or feed tank is recommended. The size of the tanks will depend upon the amount of polymer to be used, the desired feed concentration, and the number of preparations per day. Depending on ionic strength of the water and the capabilities of the make-up equipment, solutions of up to 2% concentration may be prepared using make-up water below 120°F (50°C). Generally speaking, waters with high ionic strength allow for preparation of high solution concentration.

Health and Safety Information

Although MAGNIFLOC 1596CSP flocculant is not acutely toxic by oral or dermal administration, it may cause skin burns and eye irritation. Care should be exercised to avoid spilling of the liquid into one's boots or shoes.

Before handling this material, read the corresponding American Cyanamid Company Material Safety Data Sheet for safety, health and environmental data.

Handling and Storage

MAGNIFLOC 1596CSP flocculant should be stored at temperatures between 40° and 90°F (5°–30°C). If the product freezes, it must be thawed and mixed thoroughly before use.

Storage in glass, stainless steel, plastic or epoxy-lined vessels is recommended. Do not use iron, copper or aluminum in storage or delivery systems.

Spilled product is very slippery and should be scooped and/or wiped up prior to flushing with water.

Shipping

MAGNIFLOC 1569CSP liquid flocculant is shipped in 55 gallon (200 liter) nonreturnable, lined steel drums or 275 gallon bulk drums, F.O.B. Mobile, AL. It is shipped under a protect from freezing classification. For information on bulk delivery, contact your Cyanamid Sales Representative or nearest Cyanamid Sales Office.

Important Notice

The information and statements herein are believed to be reliable, but are not to be construed as a warranty or representation for which we assume legal responsibility. Users should undertake sufficient verification and testing to determine the suitability for their own particular purpose of any information or products referred to herein. NO WARRANTY OF FITNESS FOR A PARTICULAR PURPOSE IS MADE. Nothing herein is to be taken as permission, inducement or recommendation to practice any patented invention without a license.

CYANAMID

American Cyanamid Company
Industrial Products Division
Water Treating Chemicals
Wayne, New Jersey 07470

89-4-625 6/89

CYANAMID

MATERIAL SAFETY DATA

MSDS NO. 4900-06
DATE: 05/16/90

PRODUCT IDENTIFICATION

PRODUCT NAME:	**MAGNIFLOC® 1596C Flocculant**
SYNONYMS:	Cationic polyacrylamide in water-in-oil emulsion
CHEMICAL FAMILY:	Cationic polyacrylamide in water-in-oil emulsion
MOLECULAR FORMULA:	Mixture
MOLECULAR WGT.:	Mixture

WARNING

WARNING! CAUSES SKIN IRRITATION
MAY CAUSE EYE IRRITATION

OSHA REGULATED COMPONENTS

COMPONENT	CAS. NO.	%	TWA/CEILING	REFERENCE
Petroleum distillate hydrotreated light	064742-47-8	~24	400 ppm	OSHA

NFPA HAZARD RATING

Fire
1
Health 2 0 Reactivity
-
Special

FIRE: Material that must be preheated before ignition can occur.
HEALTH: Materials which on intense or continued exposure could cause temporary incapacitation or possible residual injury unless prompt medical treatment is given.
REACTIVITY: Materials which in themselves are normally stable, even under fire exposure conditions, and which are not reactive with water.

HEALTH HAZARD INFORMATION

EFFECTS OF OVEREXPOSURE:

The acute oral (rat) and acute dermal (rabbit) LD50 values are both estimated to be greater than 10 ml/kg.
Direct contact with this material can cause moderate skin and mild eye irritation.

Toxicology information on regulated components of this product is as follows:
Acute overexposure to petroleum distillate vapors may cause eye and throat irritation. On direct skin contact, petroleum distillate may produce a severe skin irritation. Prolonged repeated exposure to petroleum distillate vapor may cause central nervous system damage as well as heart and blood disorders. The oral LD50 in the rat for various distillates ranges from 4.5 to greater than 25 ml/kg, and the inhalation LC50 in rats is about 15000 ppm. Aspiration of petroleum distillate may cause chemical pneumoni Overexposure to vapor may cause dizziness, drowsiness, headache, and nausea.

FIRST AID:

In case of skin contact, remove contaminated clothing without delay. Flush skin thoroughly with water. Do not reuse clothing without laundering.
In case of eye contact, immediately irrigate with plenty of water for 15 minutes.

EMERGENCY PHONE: 201/835-3100

AMERICAN CYANAMID COMPANY, 1 CYANAMID PLAZA, WAYNE, NEW JERSEY 07470

EXPOSURE CONTROL METHODS

Where this material is not used in a closed system, good enclosure and local exhaust ventilation should be provided to control exposure. Food, beverages, and tobacco products should not be carried, stored, or consumed where this material is in use. Before eating, drinking, or smoking, wash face and hands with soap and water. Avoid skin contact. Protective clothing such as impervious gloves, apron, workpants, long sleeve work shirt, or disposable coveralls are recommended to prevent skin contact. For operations where eye or face contact can occur, wear eye protection such as chemical splash proof goggles or face shield. Eyewash equipment and safety shower should be provided in areas of potential exposure. Where exposures are below the Permissible Exposure Limit (PEL), no respiratory protection is required. Where exposures exceed the PEL, use respirator approved by NIOSH for the material and level of exposure. See "GUIDE TO INDUSTRIAL RESPIRATORY PROTECTION" (NIOSH).

FIRE AND EXPLOSION HAZARD INFORMATION

FLASH POINT:	>200 F (>93.3 C)
METHOD:	Pensky-Martens Closed Cup
FLAMMABLE LIMITS (% BY VOL):	Not Available
AUTOIGNITION TEMP:	Not Available
DECOMPOSITION TEMP:	Not Available
FIRE FIGHTING:	Use water spray, carbon dioxide or dry chemical to extinguish fires. Use water to keep containers cool. Wear self-contained, positive pressure breathing apparatus and full fire-fighting protective clothing. See Exposure Control Methods for special protective clothing.

REACTIVITY DATA

STABILITY:	Stable
CONDITIONS TO AVOID:	None known
POLYMERIZATION:	Will Not Occur
CONDITIONS TO AVOID:	None known
INCOMPATIBLE MATERIALS:	Strong oxidizing agents. This material reacts slowly with iron, copper and aluminum, resulting in corrosion and product degradatio
HAZARDOUS DECOMPOSITION PRODUCTS:	Thermal decomposition or combustion may produce carbon monoxide, carbon dioxide, ammonia, oxides of nitrogen and/or hydrogen chloride vapor.

PHYSICAL PROPERTIES

APPEARANCE AND ODOR:	White, viscous, opaque liquid; slight hydrocarbon odor
BOILING POINT:	~347 F; ~175 C (value for oil phase)
MELTING POINT:	Similar to water
VAPOR PRESSURE:	Similar to water
SPECIFIC GRAVITY:	~1.0
VAPOR DENSITY:	Similar to water
% VOLATILE (BY VOL):	~60
OCTANOL/H_2O PARTITION COEF.:	Not Available
pH:	4-6(in water)

37

Description: CDF Cell No. 3

Area: 7,700 sf

Capacity: 430,000 gallons

Operating Parameters:

Detention Time		21.4 hours
Weir Loading Rate		-
Overflow Rate		-
Freeboard		2.5 ft.
Chemical Addition		H_2O_2 at weir
Influent Flow Rate	368	~~390~~ gpm
Effluent Flow Rate	368	~~390~~ gpm
Minimum Operating Level		11.17 ft.

94 1/15/91

The ERM Group

ERM-New England, Inc. 205 Portland Street • Boston, Massachusetts 02114 • (617) 742-8228

Project NEW BEDFORD HOT SPOT REMEDIATION W.O. No. 208-01-08 Sheet 1 of 3
Subject DESIGN BASIS By JDF Date 5/1/91
CELL NO. 3 SECONDARY SETTLING Chkd. by ES Date 5/2/91

BASIS:

FLOW RATE = ~~390~~ 368 GPM (350 GPM + ~~40~~ 18 GPM RECYCLE FROM SAND FILTER) 94 11/15/91

FOR ALUM FLOC - THE LOADING RATE IS FROM 600 TO 1,200 GAL/FT²·DAY
PEAK OF 1,200 GAL/FT²·DAY
(FROM METCALF + EDDY SECOND EDITION P. 356 TABLE 8-11)

WEIR OVERFLOW RATE = 10,000 GAL/LF·DAY

AREA CELL NO. 3 (REFER TO ATTACHED FIGURE)
LENGTH = 110 FT
WIDTH = 70 FT

AREA = 110 FT (70 FT) = 7,700 SF

INLET WEIR ~~70 FT~~ INLET DISCHARGES THROUGH DISCHARGE PIPE
EFFLUENT WEIR 100 FT

WEIR OVERFLOW RATE = $\frac{(\cancel{390}\ 368\ GPM)(1440\ MIN/DAY)}{100\ \cancel{70}\ FT}$ = ~~5,616~~ 5,299.2 ~~3,025~~ GAL/LF·DAY

WEIR IS WITHIN STANDARD RATE

SECONDARY CLARIFIER OVERFLOW RATE

368 = $\frac{(\cancel{390}\ GPM)(1440\ MIN/DAY)}{7,700\ SF}$ = ~~73~~ 68.8 GAL/SF·DAY

SECONDARY CLARIFIER OVERFLOW RATE IS BELOW STANDARD RATES - SYSTEM IS SUFFICIENTLY SIZED.

AVAILABLE STORAGE VOLUME

MAXIMUM WATER LEVEL - OPERATING 13 FT
BOTTOM ELEVATION = 5.5 FT
TO MAINTAIN 30 MINUTES DETENTION TIME IN CELL NO. 3 NEED VOLUME
OF ($\cancel{390}$ 368 GPM)(30 MIN) = ~~11,700~~ GALLONS 11,040
= ~~1,565~~ CF 1476

REQUIRED DEPTH OF WATER = $\frac{\cancel{1,565}\ 1476\ CF}{7,700\ SF}$ = 0.2 FT

STORAGE VOLUME AVAILABLE TO HANDLE SETTLED MATERIAL

DEPTH = 13 FT - 0.2 FT - 5.5 FT = 7.3 FT

VOLUME = 7.3 FT (7,700 SF) = 56,210 CF
= 2,080 CY

UPDATE 94 8/27/91

2 OF 3 391

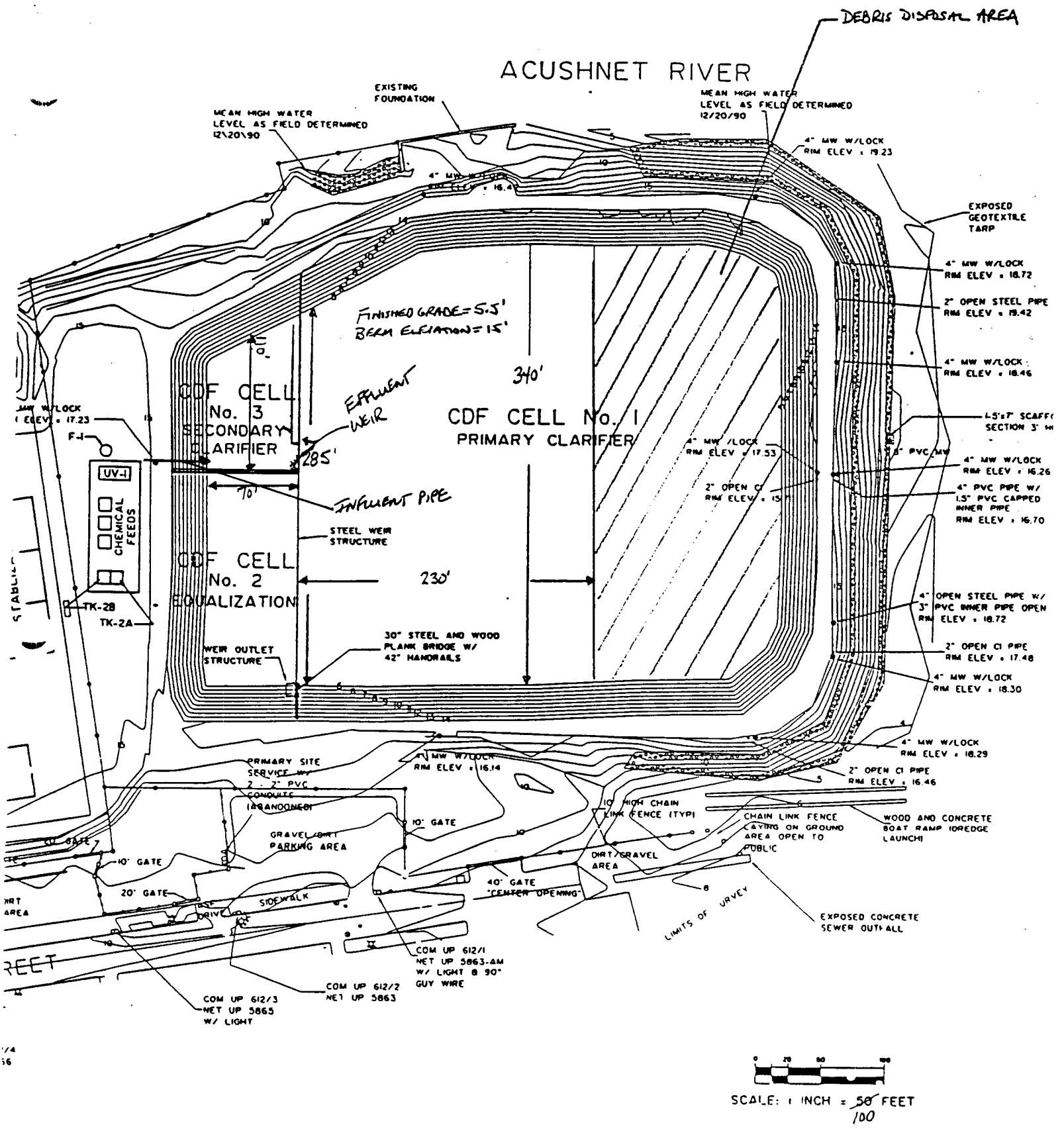
DEBRIS DISPOSAL AREA
ACUSHNET RIVER
EXISTING FOUNDATION
MEAN HIGH WATER LEVEL AS FIELD DETERMINED 12\20\90
MEAN HIGH WATER LEVEL AS FIELD DETERMINED 12/20/90
4" MW W/LOCK RIM ELEV = 19.23
EXPOSED GEOTEXTILE TARP
4" MW W/LOCK RIM ELEV = 18.72
2" OPEN STEEL PIPE RIM ELEV = 19.42
4" MW W/LOCK RIM ELEV = 18.46
FINISHED GRADE = 5.5'
BERM ELEVATION = 15'
340'
CDF CELL No. 3 SECONDARY CLARIFIER
EFFLUENT WEIR
285'
CDF CELL No. 1 PRIMARY CLARIFIER
4" MW W/LOCK RIM ELEV = 17.53
4" MW W/LOCK RIM ELEV = 16.26
4" PVC PIPE W/ 1.5" PVC CAPPED INNER PIPE RIM ELEV = 16.70
F-1
UV-1
CHEMICAL FEEDS
70'
INFLUENT PIPE
STEEL WEIR STRUCTURE
CDF CELL No. 2 EQUALIZATION
230'
TK-2B
TK-2A
4" OPEN STEEL PIPE W/ 3" PVC INNER PIPE OPEN RIM ELEV = 18.72
2" OPEN CI PIPE RIM ELEV = 17.48
4" MW W/LOCK RIM ELEV = 18.30
30" STEEL AND WOOD PLANK BRIDGE W/ 42" HANDRAILS
WEIR OUTLET STRUCTURE
4" MW W/LOCK RIM ELEV = 18.29
2" OPEN CI PIPE RIM ELEV = 16.46
4" MW W/LOCK RIM ELEV = 16.14
PRIMARY SITE SERVICE ~~WY~~ 2 - 2" PVC CONDUITS (ABANDONED)
10' HIGH CHAIN LINK FENCE (TYP)
CHAIN LINK FENCE LAYING ON GROUND AREA OPEN TO PUBLIC
WOOD AND CONCRETE BOAT RAMP (DREDGE LAUNCH)
10' GATE
GRAVEL/DIRT PARKING AREA
DIRT/GRAVEL AREA
10' GATE
20' GATE
SIDEWALK
DRIVE
40' GATE "CENTER OPENING"
LIMITS OF SURVEY
EXPOSED CONCRETE SEWER OUTFALL
COM UP 612/1 NET UP 5863-AM W/ LIGHT & 90" GUY WIRE
COM UP 612/2 NET UP 5863
COM UP 612/3 NET UP 5865 W/ LIGHT
SCALE: 1 INCH = ~~50~~ 100 FEET

ERM-New England, Inc. 205 Portland Street • Boston, Massachusetts 02114 • (617) 742-8228

Project NEW BEDFORD HOT SPOTS REMEDIATION W.O. No. 208-01-08 Sheet 3 of 3
Subject DESIGN BASIS By JDF Date 5/2/91
CELL NO. 3 SECONDARY SETTLING Chkd. by FS Date 5/2/91

ESTIMATE OF SETTLABLE MATERIAL

FLOW RATE = ~~390~~ 368 GPM

WASTEWATER TSS CONCENTRATION = 250 PPM ALUM DOSE = 25 PPM

REDUCTION IN TDS CONCENTRATION = 2000 PPM

SOLIDS REMOVAL IN CELL NO. 3 = 98%

SOLIDS SPECIFIC GRAVITY = 1.1

$$\text{SETTLED SOLIDS} = (\cancel{390}\ 368\ \text{GPM})(2000 + 250 + 25\ \text{PPM})(0.98)(3.785\ \tfrac{\text{LIT}}{\text{GAL}})(1440\ \tfrac{\text{MIN}}{\text{DAY}})\left(\tfrac{\text{GM}}{1000\ \text{MG}}\right)\left(\tfrac{\#}{454\ \text{GM}}\right)(1.1)$$

$$= \cancel{11,482}\ 10,834.8\ \#/\text{DAY}$$

$$\text{TOTAL SOLIDS} = 80(\cancel{11,482}\ 10,834.8\ \#/\text{DAY}) = \cancel{918,600}\ 866,783\ \# \quad 433.4$$

$$= \cancel{459.5}\ \text{TONS}$$

VOLUME OF SOLIDS

ASSUME = 30% SOLIDS

$$\text{VOLUME} = \frac{(\cancel{918,600}\ 866,783\ \#)\left(\frac{1\ \text{GAL}}{8.34\ \#}\right)\left(\frac{1\ \text{CF}}{7.48\ \text{GAL}}\right)}{0.30} = \cancel{49,100}\ 46,315\ \text{CF} = \cancel{1,819}\ 1,715\ \text{CY}$$

SAY ~~4900~~ 1,750 CY

THEREFORE THERE IS SUFFICIENT VOLUME TO STORE SOLIDS THAT WILL SETTLE IN CELL NO. 3

HOWEVER, SHOULD SOLID CAPTURE IN CDF CELL EXCEED ANTICIPATED AMOUNT, OR SOLIDS DO NOT ACHIEVE 30% CONCENTRATION, THEN SOME OF THE SOLIDS MAY NEED TO BE TRANSPORTED TO CDF CELL NO. 1 FOR TEMPORARY STORAGE.

41

Description: **Hydrogen Peroxide Feed System CF-101**

Size: 2,500-gallon tank for 50% H_2O_2

Capacity:

Operating Parameters:

Pump Flow Rate	2 @ 2 gph

ERM-New England, Inc. 205 Portland Street • Boston, Massachusetts 02114 • (617) 742-8228

Project: NEW BEDFORD HOT SPOTS
Subject: HYDROGEN PEROXIDE FEED TO REMOVE SOLUBLE IRON
W.O. No.: [illegible]
By: JCF
Chkd. by:
Sheet 1 of 1
Date: 9/27/9[illegible]
Date:

BASIS: FORWARD FLOW = ~~350~~ 368 GPM

H_2O_2 DOSING RATE 2 GPM (50% H_2O_2)

H_2O_2 CONCENTRATION IN WASTEWATER =

$$\frac{(2\ \text{GAL/HR})(50\%)(34\ \text{GM/MOLE})(1000\ \text{mg/g})}{(\cancel{350}\ 368\ \text{GPM})(60\ \text{MINUTES/HR})(3.785\ \text{L/GAL})} = \cancel{0.85}\ 0.41\ \text{mg/L}$$

$$= 0.4\ \text{ppm}$$

DOSAGE OF H_2O_2 MAY NEED TO BE INCREASED/LOWERED BASED ON ACTUAL FIELD CONDITIONS

Description: **F-100 Continuous Backwash Sand Filter**

Size: 9 ft. Diameter

Capacity: 103 Cu. Ft. Media

Operating Parameters:

Normal Flow (EXIT FLOW)	350 gpm
Normal Pressure Drop	18-24 inches H_2O
Peak Flow	384 gpm
Peak Pressure Drop	-
Backwash Flow Rate	18 ~~39~~ gpm 94 11/5/91
Backwash Time	Continuous
Filtration Area	64 sf
Height	25'-4"
Air Consumption	3-4 scfm @ 15-25 psig
Inlet/Outlet Pipe	6 inch
Filter Retention	10 micron

The ERM Group

44

DynaSand Filter
The Proven Concept in Sand Filtration

The DynaSand Filter is a continuous backwash, upflow, deep-bed granular media filter. The filter media is continuously cleaned by recycling the sand internally through an airlift pipe and sand washer. The regenerated sand is redistributed on top of the sand bed, allowing for a continuous uninterrupted flow of filtrate and reject (backwash) water.

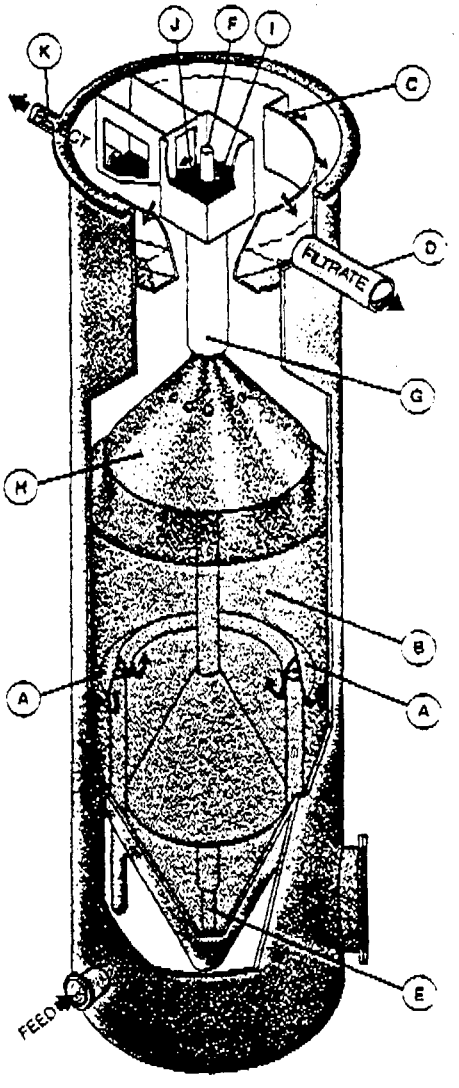

Feed is introduced into the bottom of the filter, then flows upward through a series of riser tubes and is evenly distributed into the sand bed through the open bottom of an inlet distribution hood (A) (Fig. 1). The influent flows upward, through the downward moving sand bed (B), with the solids being removed. The clean filtrate exits from the sand bed, overflows a weir (C), and is discharged from the filter (D). Simultaneously, the sand bed, along with the accumulated solids, is drawn downward into the suction of an airlift pipe (Fig. 2) which is positioned in the center of the filter. A small volume of compressed air is introduced into the bottom of the airlift (E). The air lifts the dirty sand up the airlift pipe, and air scours the sand at a rate of 100 to 150 SCFM/ft.^{2}. The impurities are scoured loose from the sand during this violently turbulent upward flow. Upon reaching the top of the airlift (F), the dirty slurry spills over into the central reject compartment (I). The sand is returned to the sand bed through the gravity washer/separator (G) which allows the fast settling sand to penetrate, but not the dirty liquid. The washer/separator is placed concentrically around the upper part of the airlift and consists of several stages to prevent short circuiting (Fig. 3). By setting the filtrate weir (C) above the reject weir (J), a steady stream flows upward, countercurrent to the sand, through the washer section and cleans the sand at a backwash loading rate of 50-100 gpm/ft.^{2}. A continuous reject flow exits near the top of the filter (K), carrying away the dirt and impurities removed in the filter. Since the sand has a higher settling velocity than the dirt particles, it is not carried out of the filter. The clean sand is redistributed by means of a sand distribution cone (H). The sand bed is continuously cleaned while both a continuous filtrate and a continuous reject stream are produced.

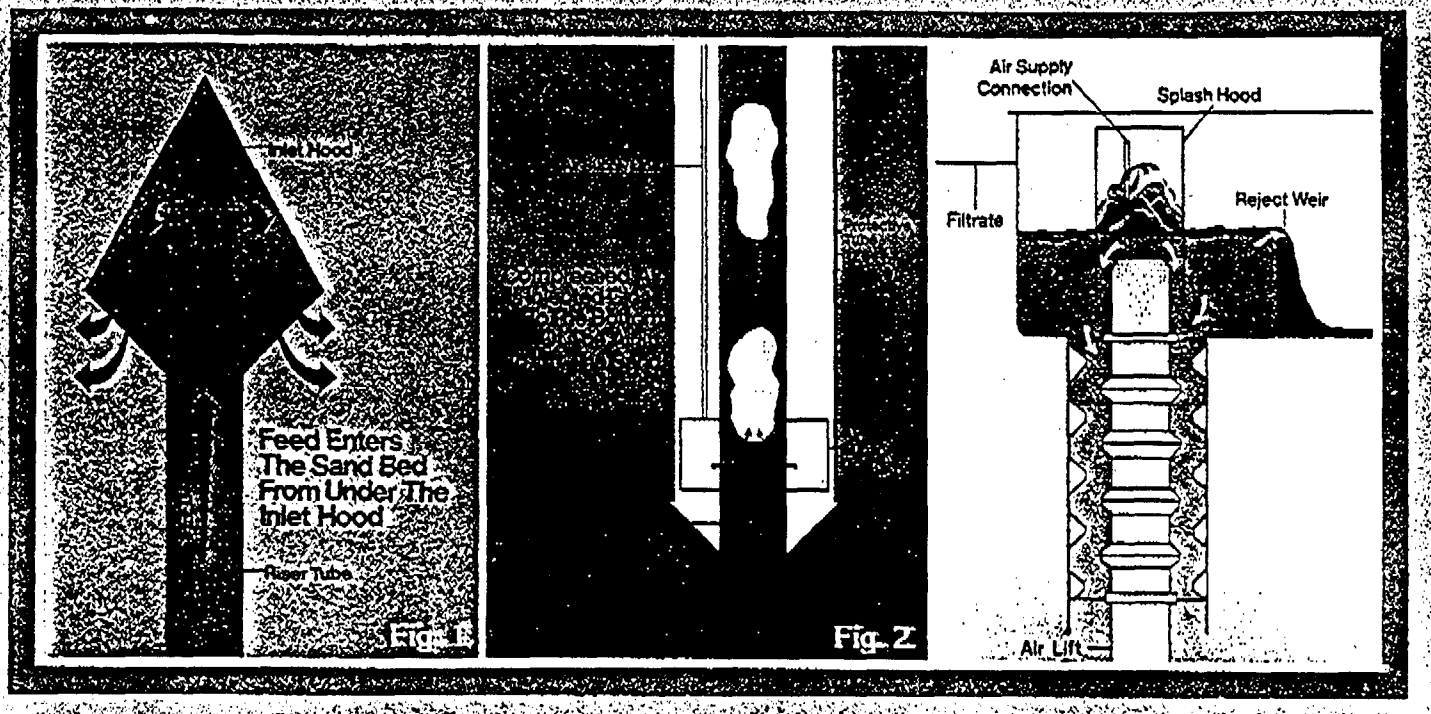

Features and Benefits

Continuously Cleaned Sand Bed	No shutdown for backwash cycles Elimination of ancillary equipment No flow control valves, splitter boxes, backwash controls Elimination of mud balls
No Moving Parts	Little operator attention or maintenance required
Low Pressure Drop	Easily gravity fed (pressure drop less than 24") Low power consumption
Single Media	Eliminates internal screens, grids, underdrains, etc.
High Solids Capability	Handles upstream upsets more easily Improves loading rates where loading is limited by solids capacity
Continuous Reject (Backwash)	Eliminates backwash holding tanks, high volume pumps Small continuous stream easily returned to process

Standard Features for Packaged Units

Epoxy painted carbon steel or FRP tanks

All stainless and FRP internals

Air control panel

Standard (40") or deep-bed (80") filtration

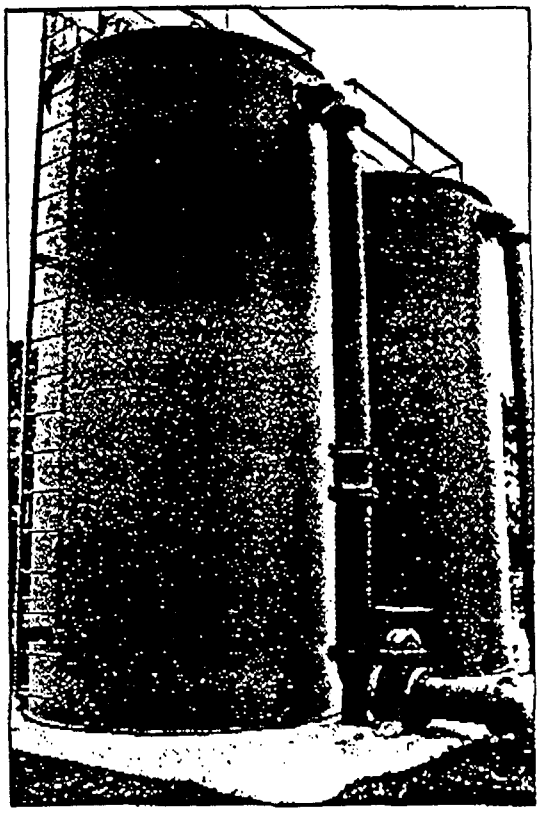

Data - Cylindrical Units

Model	DSF-7	DSF-12	DSF-19	DSF-38	DSF-64
Filtration Area (ft.²)	7	12	19	38	64
Inside Diameter	3'0"	4'0"	5'0"	7'0"	9'0"
Height	8'9"	12'0"	12'9"	14'0"*	18'6"*
Feed Rates (gpm)**	14-42	24-72	38-114	76-228	128-384
Sand Required (Tons)	1.6	3.3	5	9.5	20
Air Consumption (SCFM @ 15-25 psig)	0.5-1.0	0.5-1.5	1-2	2-3	3-4
Pressure Drop (Inches)	15-20	18-24	18-24	18-24	18-24

*Standard Platform and Ladder adds 3'6". Deep-bed design adds 3'4".
**Dependent on application.

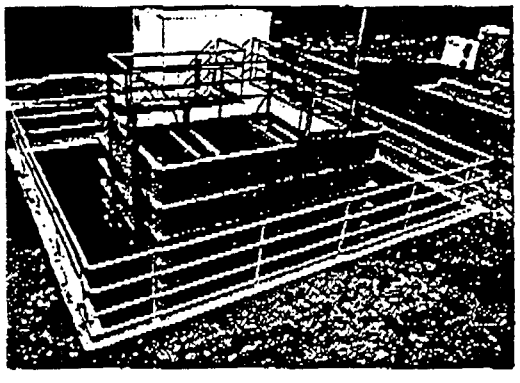

Data - Rectangular Units

Model	DSF-50	DSF-100	DSF-150	DSF-200
Filtration Area (ft.²)	50	100	150	200
Inside Dimensions	5' x 10'	10' x 10'	10' x 15'	10' x 20'
Height	12'0"*	12'0"*	12'0"*	12'0"*
Feed Rates (gpm)**	100-300	200-600	300-900	400-1200
Sand Required (Tons)	9	18	27	36
Air Consumption (SCFM @ 15-25 psig)	3-5	7-9	10-12	12-15
Pressure Drop (Inches)	15-20	15-20	15-20	15-20

*Standard Platform and Ladder adds 3'6".
**Dependent on application.

Applications: Typical Data

Application	Loading Rate (gpm/ft.²)	Influent Solids (ppm)	Filtrate Solids (ppm)
Metal Finishing	4-6	20-100	2-5
Tertiary Filtration	3-5	20-150	5-10
Surface Water (Continuous Contact Filtration)	4-6	10-100 NTU	0.1-0.5 NTU
Steel Mill Scale	8-12	50-300	5-10
Phosphorous Removal	3-5	1-10 ppm P	<0.3 ppm P
Algae Removal	2-4	20-100	10-20
Oil Removal	2-6	20-200 Free oil	5-10 Free oil

Other Proven Applications

- Brine Filtration
- Cooling Tower Blowdown
- Chemical Processing
- Product Recovery

Combination Lamella® Gravity Settler/Thickener and DynaSand® Filter

The DynaSand Filter can easily be used as a polishing filter following the Parkson Lamella Gravity Settler/Thickener (LGS/T). The feed is pumped to the LGS/T. The clarified overflow from the LGS/T is gravity fed to the DynaSand Filter. The filtered water can then flow by gravity to discharge or reuse. The continuous reject also flows by gravity back to the LGS/T feed holding sump. Thus, the entire flash mixing, flocculation, clarification and filtration process can be accomplished on an uninterrupted, no operator attention basis using only one feed pump.

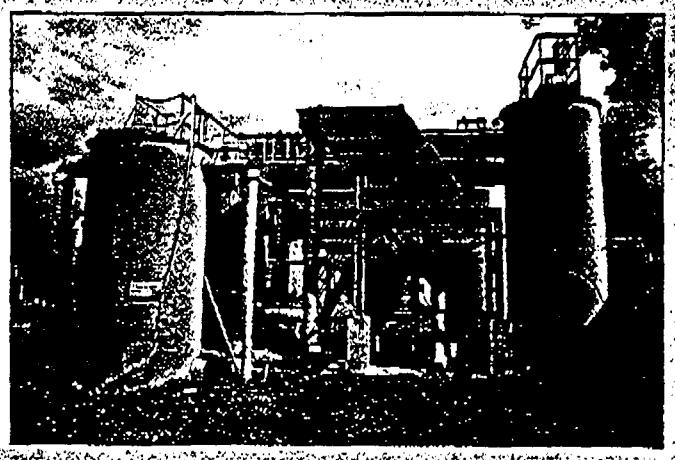

Continuous Contact Filtration

Water and wastewater treatment in conventional plants involves flocculation, clarification and filtration. Direct filtration eliminates clarification but still requires flocculation. CONTINUOUS CONTACT FILTRATION performs coagulation, flocculation and separation directly within the sand bed and eliminates the external flocculators and clarifiers. The resultant savings can be up to 85% compared to conventional treatment and 50% compared to direct filtration. And, since only small flocs are required for filtration as opposed to clarification, chemical dosage is reduced by 20-30% in most cases compared to conventional treatment.

Conventional

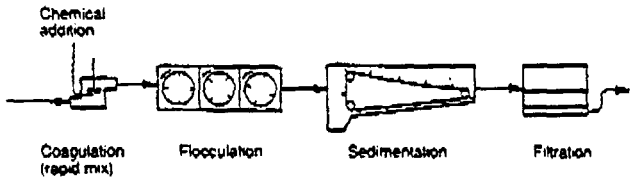

Direct Filtration

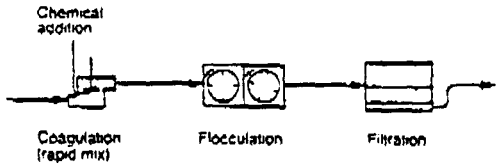

Continuous Contact Filtration

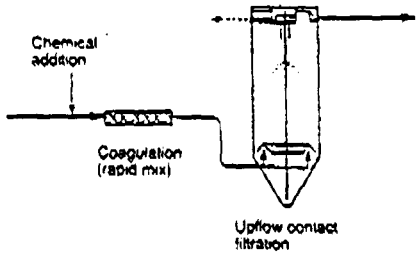

For potable water applications, the top feed DynaSand Filter design is utilized.

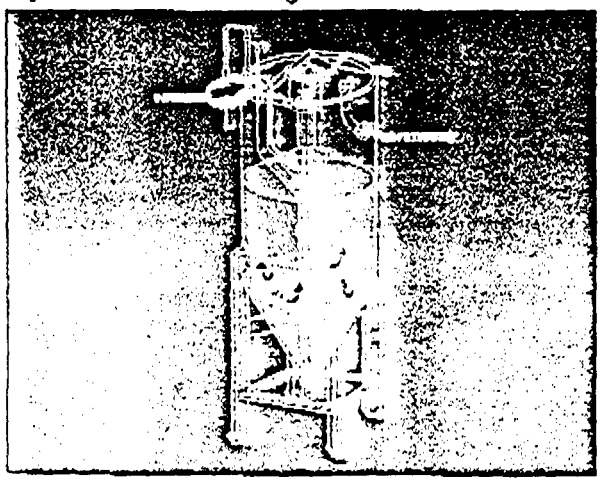

Applications

- Potable Water - surface and well water filtration
- Process Water
- Phosphorous Removal
- Algae Filtration
- Brine Filtration

TABLE 12.10
Filtration performance

Filter type	Wastewater	Filter depth, ft	Hydraulic loading, gal/(min · ft²)	Percent removal		Effluent, mg/l	
				SS	BOD	SS	BOD
Gravity downflow	TF effluent	2–3	3	67	58	—	2.5
Pressure upflow	AS effluent	5	2.2	50	62	7.0	6.4
Dual media	AS effluent	2.5	5.0	74	88	4.6	2.5
Gravity downflow	AS effluent	1.0	5.3	62	78	5	4
Dynasand	Metal finishing	3.3	4–6	90	—	2–5	—
	AS effluent	3.3	3–10	75–90	—	5–10	—
	Oily wastewater	3.3	2–6	80–90†	—	5–10†	—
Hydroclear	Poultry	1	2–5	88	—	19	—
	Oil refinery	1	2–5	68	—	11	—
	Unbleached kraft	1	2–5	74	—	17	—

† Free oil.
Note:
ft = 0.305 m
gal/(min · ft²) = 4.07 × 10⁻² m³/(min · m²)

The Dynasand (DSF) continuous backwash filter is a continuous self-cleaning upflow deep-bed granular media filter. The filter media is cleaned continuously by recycling the sand internally through an airlift pipe and sand washer, as shown in Fig. 12-17. The regenerated sand is redistributed on top of the bed, allowing for a continuous uninterrupted flow of filtered water and reject water. Filtration performance is shown in Table 12.10.

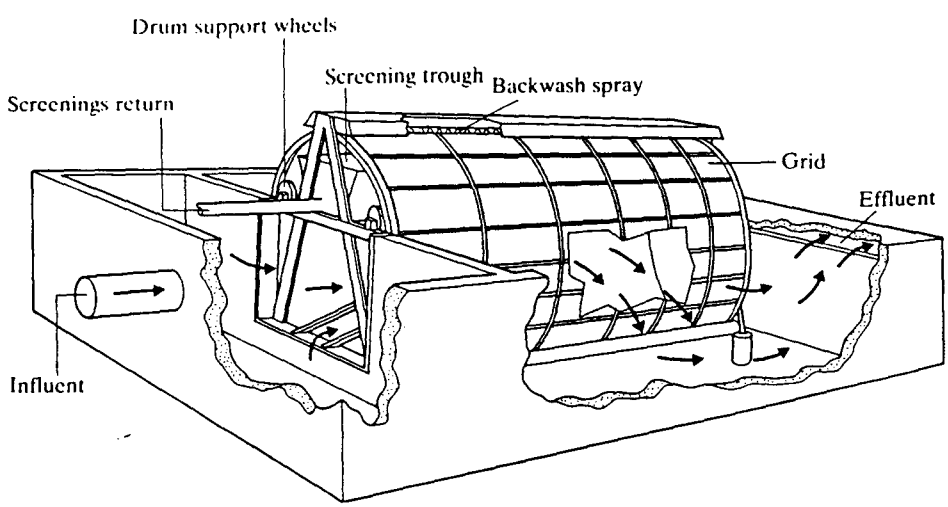

FIGURE 12-18
Microscreen (*Courtesy of Envirex, Inc.*)

49

TABLE 12.11
Removal efficiencies

Aperture screen, μm	Fl ga (s
35	1(
23	(

Note: gal/(min · ft²) = 4.07 × 1(

Microscreen

A microscreen is a rot
less steel fabric (Fig.
filtered through the f
fabric. As the drum r
at the top of the dru
spray nozzles that ex
18 inches (30 to 46 c
throughput water. P
with hydraulic loadin
cleaning of the drum

For filtration c
(ft² · d) [4.3 kg/(m² ·
(min · m²)] has been
and BOD of 6 to 8
sludge effluent on a
For design purpose
given in Table 12.11.

The efficiency
decrease in the thro
with an increase in i

REFERENCES

1. Eckenfelder, W. W.,
Waste Disposal Met
1958.
2. Crites, R. W.: *Procee*
3. "Diagnosis and Im
Handbook 60, 1954.
4. Jewell, W. J.: *Limit*
Cornell University,
5. Adamczyka, A. F.:
Science, Ann Arbor,

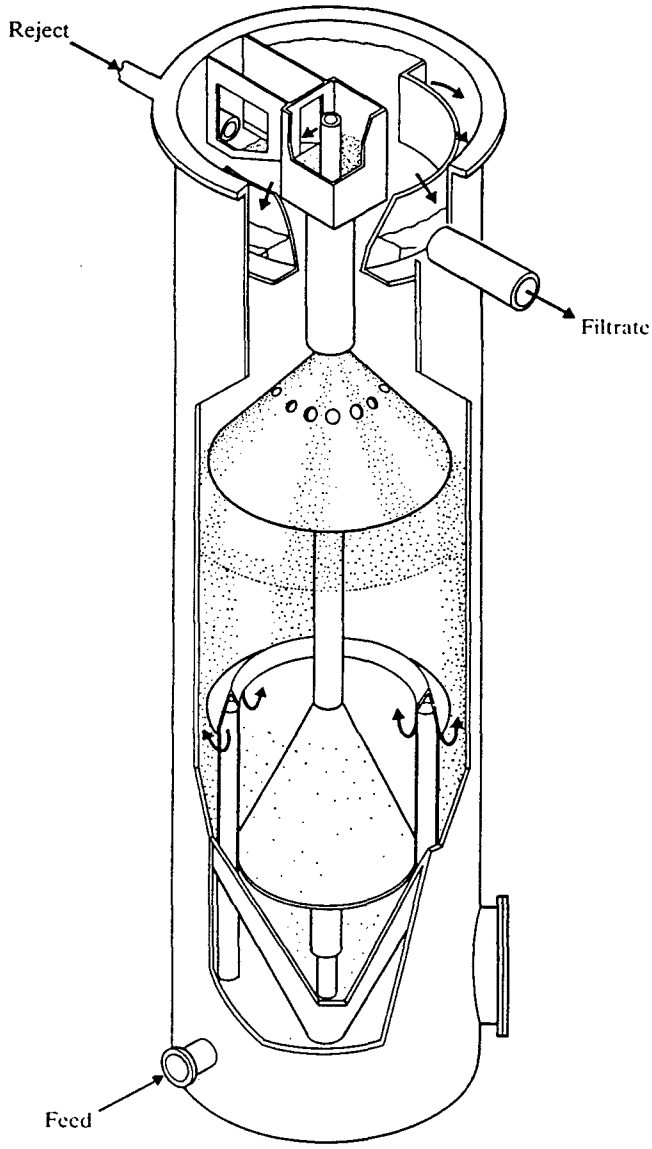

FIGURE 12-17
Dynasand filter (DSF). (*Courtesy of Parkson Corporation.*)

Filtration rate	2–5 gal/(min · ft^2) [0.081–0.204 m^3/(min · m^2)]
Media size	0.35–0.45 mm sand
Bed depth	10–12 in (25.4–30.4 cm)
Backwash rate	12 gal/(min · ft^2)[0.5 m^3/(min · m^2)]
Air mix	0.25 standard ft^3/(min · ft^2) [0.076 std m^3/(min · m^2)]
Terminal head loss	3.5 ft (1.07 m)
Backwash filtrate ratio	0.10

Description: **F-101 A,B Polishing Filter**

Size: 28 inch diameter

Operating Parameters:

Rated Flow Rate	350 gpm
Materials of Construction	304 Stainless Steel
Pressure Rating	150 psi
Filter Retention	2.5 micron
Clean Pressure Drop	2 psi
Dirty Pressure Drop	150 psi max.
	50 psi max. operating
Appurtenances	~~Steid~~ Skid Mounted

The ERM Group

UV/oxidation equipment. Precipitation of iron on the quartz tubes will reduce the effectiveness of these units and increase maintenance.

The results of the flocculation tests conducted during the second phase of the treatability study indicated that alum was not as effective at removing total suspended solids as during the first phase testing. Although the second phase total suspended solids concentrations were higher than during the first phase testing, the remaining PCB concentrations were similar to results obtained during the first phase. However, alum used during the Phase 2 testing was still more effective than lime at suspended solids removal.

Filtration test results indicate that the 2.5 micron filter is effective at further removing PCBs and suspended solids from the wastewater, but that a prefilter will be required upstream of the polishing filter. During the removal of solids from the wastewater, the 2.5 micron filter clogged after passing approximately 1,300 mls. For this reason it is recommended that a sand filter be used prior to the polishing filter to reduce the loading on the polishing filters. The sand filter would also be capable of controlling suspended solid surges that might result from operational upsets in Cell No. 3.

The carbon adsorption isotherm prepared from the treatability study data indicates that carbon adsorption is not efficient at removing PCBs from this wastewater. As indicated in Figure 4-2, the isotherm has points that correspond well with EPA generated isotherms for small PCB concentration reductions, but the carbon performance deviates greatly from the EPA performance as PCB concentrations approach detection limits. Therefore, the amount of carbon required to reduce PCB concentrations to detection limits will be very large. The suspected reason for the inefficiency of the carbon at removing low level PCBs is, although the total suspended solids concentrations in the wastewater were very low, the PCBs adhering to the colloidal material are not adsorbed onto the carbon. This conclusion was supported by analyzing duplicate PCB samples from the carbon isotherm tests and having one set of samples shaken and decanted prior to analysis. The other set of samples were not shaken prior to analysis. The difference

Description: **UV-100 UV/Hydrogen Peroxide Unit**

Size: -

Capacity: -

Operating Parameters:

Flow Rate	350 gpm
Detention Time	3 minutes
Energy Requirements	400 KVA
Appurtenances	Skid Mounted

54
APR 1 1991

March 28, 1991

Mr. Bill Breed
ERM - New England
205 Portland Avenue
Boston, Massachusetts 02114

Re: Bench-Scale Treatability Study
New Bedford Superfund Site
Project #TMM-9102-5381

Dear Mr. Breed:

Peroxidation Systems, Inc. (PSI) was contracted by ERM - New England (ERM) to perform a treatability study on contaminated surface water using the **perox-pure™** Process. The surface water reportedly contained 320 μg/l of PCBs. The specified treatment objective was the destruction of PCBs to 1 μg/l.

A bench-scale **perox-pure™** treatability study was performed on the surface water in early February of 1991. The study was performed at the PSI Testing Laboratory in Tucson, Arizona. The purpose of the study was to provide a range of data from which full-scale treatment criteria could be determined. A copy of the bench-scale testing report is enclosed.

The surface water received by PSI was turbid orange with high iron and suspended solids concentrations. Since the iron and solids concentrations were at levels which would hinder the **perox-pure™** reaction and foul the quartz tubes in the **perox-pure™** equipment, pretreatment was effected via gravity filtration. After filtration, the suspended solids concentration was negligible and the iron concentration in the surface water was less than 1 mg/l.

A series of bench-scale tests were conducted on the contaminated surface water at a variety of oxidation times, H_2O_2 dosages and pH values. Determination of the best treatment conditions was not possible because the PCBs were destroyed to below the 5 μg/l analytical detection limit in every treated sample. However, PCB oxidation was rapid with destruction to below the detection limit occurring within 0.5 minutes in some cases.

Based upon the bench-scale results, and previous treatability studies conducted by PSI on PCB laden waters, a full-scale contact time of 1.4 minutes is projected to meet the specified treatment criteria. A **perox-pure™** Model CWB 360 will provide the necessary contact time at the anticipated full-scale surface water flow rate of 350 gpm. A specification sheet for the CWB 360 is enclosed for your information.

I understand that ERM plans to rent the **perox-pure™** treatment equipment for a period of four months in the spring of 1992. While PSI will make every effort to meet this schedule, it is not possible to reserve a CWB 360 for such a short period of time. The **perox-pure™** equipment is therefore subject to availability.

Peroxidation Systems Inc.
5151 E. Broadway, Suite 600 Tucson, Arizona 85711 602-790-8383 FAX 602-790-8008

55/

The rental fee for the **perox-pure™** Model CWB 360 including the hydrogen peroxide (H_2O_2) feed module and complete service/maintenance of the equipment by PSI is $15,000 per month. The usage of PSI H_2O_2 solution would also be billed each month. A fee of $15,000 would apply for equipment mobilization, and an additional $15,000 when the equipment is removed.

In comparison to the rental fees, purchase of the CWB 360 would involve a capital investment of approximately $350,000 as well as additional fees for repair/maintenance parts and labor. The mobilization and demobilization fees would also apply.

For an PCB effluent concentration of 0.6 μg/l, a CWB-405/360 would be required. The capital cost for this unit is approximately $15,000 more than the CWB-360 quoted above.

Bill, thank you for the opportunity to demonstrate the capabilities of the **perox-pure™** Process in treating the contaminated s urface water at the New Bedford Site. If you need any additional information, or if you have any questions concerning the treatability study or the **perox-pure™** equipment, please feel free to call Mike Donaway at (201)276-0044 or myself.

Sincerely,

Kathy J. Kent
Applications Engineer

KJK:cw
Enclosure

cc: Fred Bernardin, PSI
Mike Donaway, PSI
Geoff Swett, PSI
PSI File

56/

CONFIDENTIAL TESTING REPORT

DESTRUCTION OF ORGANIC CONTAMINANTS IN SURFACE WATER WITH THE perox-pure™ PROCESS

for

ERM-New England
Boston, Massachusetts
Purchase Order No. 20801-04

by

Peroxidation Systems, Inc.
5151 E. Broadway, Suite 600
Tucson, Arizona 85711

February 27, 1991

The information contained in this report includes descriptions and procedures which are confidential to Peroxidation Systems, Inc. The report shall not be copied nor released to third parties without prior approval from Peroxidation Systems, Inc.

TABLE OF CONTENTS

		Page
1.0	INTRODUCTION	1
2.0	TESTING PROCEDURES	2
	2.1 Description of Surface Water	2
	2.2 Testing Protocol	2
3.0	TESTING RESULTS	3
4.0	FULL-SCALE TREATMENT CONDITIONS	5
	4.1 Treatment Criteria	5
	4.2 Recommended Process Conditions	5
5.0	SUMMARY	6

58/

1.0 INTRODUCTION

The **perox-pure**™ Process destroys dissolved organic contaminants in water by means of chemical oxidation. Ultraviolet (UV) light catalyzes the chemical oxidation of organic contaminants in water by its combined effect upon the organic contaminants and its reaction with hydrogen peroxide (H_2O_2). Many organic contaminants absorb UV light and may undergo a change in their chemical structure or may become more reactive with chemical oxidants. More importantly, UV light at less than 400 nm wavelength reacts with H_2O_2 molecules to form hydroxyl radicals. These powerful chemical oxidants then react with the organic contaminants in the water. If carried to completion the reaction products of hydrocarbon oxidation with the **perox-pure**™ Process are carbon dioxide and water.

Peroxidation Systems, Inc. (PSI) was contracted by ERM-New England (ERM) to perform a treatability study on contaminated surface water from the New Bedford Superfund Site using the **perox-pure**™ Process. The surface water reportedly contained 320 $\mu g/l$ of PCBs and 4 $\mu g/l$ of naphthalene. The treatment objective specified by ERM was the destruction of PCBs to 1 $\mu g/l$.

A bench-scale **perox-pure**™ treatability study was performed on the surface water during February 1991 at the PSI Testing Laboratory in Tucson, Arizona. These tests were designed to provide a range of data from which full-scale treatment criteria and costs would be projected.

59/

GOLDEN STATE
Analytical Services, Inc.
15735-1 Strathern St. • Van Nuys • CA 91406
Tel: (818) 376-1122 • Fax: (818) 781-8128

Client:	Peroxidation Systems, Inc.	Matrix:	Liquid
Project Name:	ERM N.E.	Date Received:	01/30/91
Project#:	N/A	Date Analyzed:	01/30-31/91
P.O.#:	N/A	GSAS Job#:	6221

PCBs (608)
ug/L (ppb)

Client Sample#:	ENE RAW	ENE 1-0	ENE 1-1	Reporting
GSAS Sample#:	GS-0191-841	GS-0191-842	GS-0191-843	Limits
PCB - 1016	BRL	BRL	BRL	5.0
PCB - 1221	BRL	BRL	BRL	5.0
PCB - 1232	80	57	BRL	5.0
PCB - 1242	BRL	BRL	BRL	5.0
PCB - 1248	BRL	BRL	BRL	5.0
PCB - 1254	BRL	BRL	BRL	5.0
PCB - 1260	BRL	BRL	BRL	5.0

BRL: Below Reporting Limit

Approved By: Dr. B. Gene Bennett

Dr. B. Gene Bennett

60/

GOLDEN STATE
Analytical Services, Inc.
15735-1 Strathern St. • Van Nuys • CA 91406
Tel: (818) 376-1122 • Fax: (818) 781-8128

Client:	Peroxidation Systems, Inc.	Matrix:	Water
Project Name:	ERM N.E.	Date Received:	02/04/91
Project#:	N/A	Date Analyzed:	02/06/91
P.O.#:	N/A	GSAS Job#:	6234

PCBs (608)
ug/L (ppb)

Client Sample#:	ENE 3-2	ENE 4-0	ENE 4-1	Reporting
GSAS Sample#:	GS-0291-007	GS-0291-008	GS-0291-009	Limits
PCB - 1016	BRL	BRL	BRL	5.0
PCB - 1221	BRL	BRL	BRL	5.0
PCB - 1232	BRL	BRL	BRL	5.0
PCB - 1242	BRL	BRL	BRL	5.0
PCB - 1248	BRL	BRL	BRL	5.0
PCB - 1254	BRL	BRL	BRL	5.0
PCB - 1260	BRL	BRL	BRL	5.0

BRL: Below Reporting Limit

Approved By: Dr. B. Gene Bennett

B. Gene Bennett

611

GOLDEN STATE
Analytical Services, Inc.
15735-1 Strathern St. • Van Nuys • CA 91406
Tel: (818) 376-1122 • Fax: (818) 781-8128

Client:	Peroxidation Systems, Inc.	Matrix:	Water
Project Name:	ERM N.E.	Date Received:	02/04/91
Project#:	N/A	Date Analyzed:	02/06/91
P.O.#:	N/A	GSAS Job#:	6234

PCBs (608)
ug/L (ppb)

Client Sample#:	ENE 4-2	Reporting
GSAS Sample#:	GS-0291-010	Limits
PCB - 1016	BRL	5.0
PCB - 1221	BRL	5.0
PCB - 1232	BRL	5.0
PCB - 1242	BRL	5.0
PCB - 1248	BRL	5.0
PCB - 1254	BRL	5.0
PCB - 1260	BRL	5.0

BRL: Below Reporting Limit

Approved By: Dr. B. Gene Bennett

Dr. B. Gene Bennett

perox-pure™

MODULAR TREATMENT SYSTEMS

MODEL CW-360

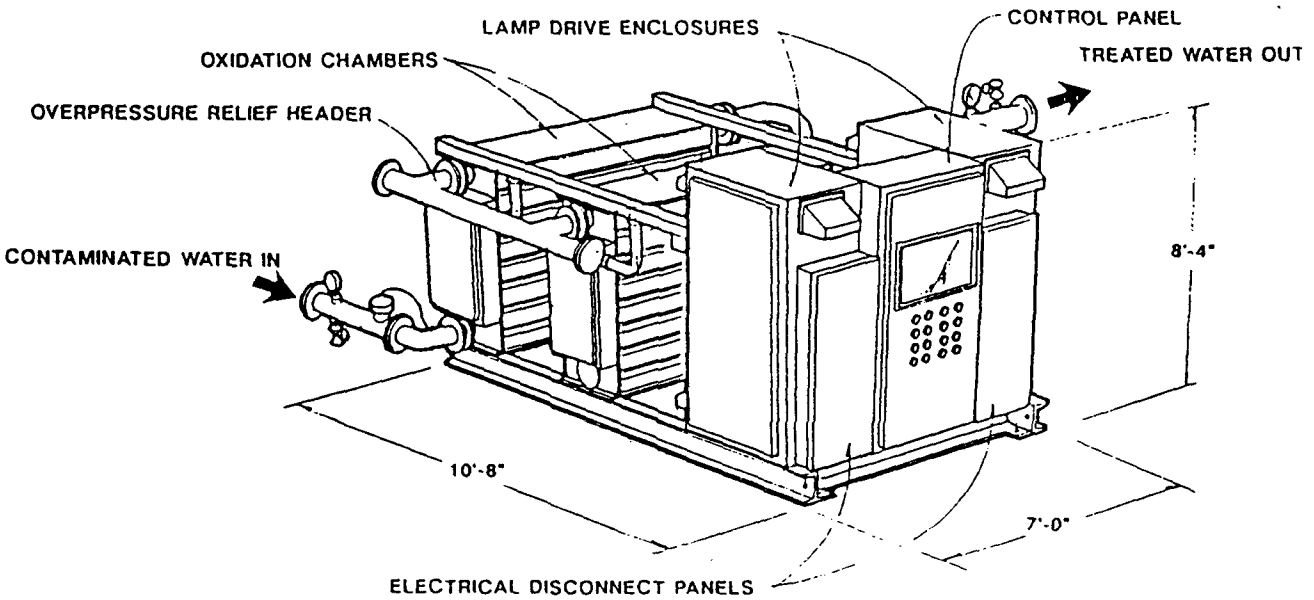

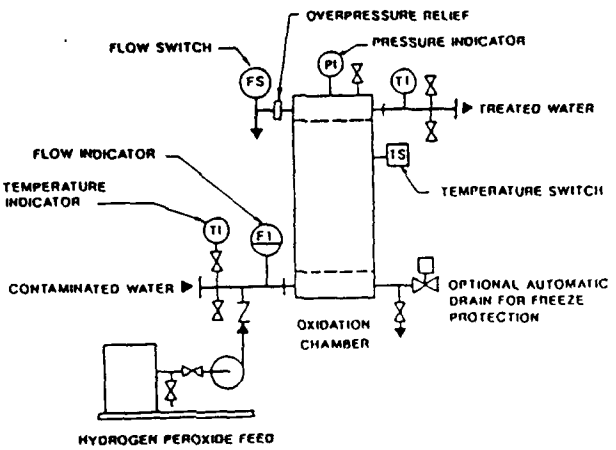

SPECIFICATIONS	Model CW-360	
Flow Rate:		
Maximum	250 gpm	1000 gpm
Connections:	150# Flange	150# Flange
Inlet:	3"	6"
Outlet:	4"	6"
Power Supply:	3 pH/60Hz/480V, 360KW, 480 Amps	
Electrical Encl.:	NEMA 3R	
Material -		
Wetted Parts:	316 SS, Quartz, Fluoroelastomers, TFE	
External Parts:	Enameled Steel	
Weight -		
Shipping:	12500 lbs.	
Operating:	17900 lbs.	

The perox-pure™ chemical oxidation system consists of modular equipment designed to treat water contaminated by dissolved organic materials. Bench-scale process evaluations will determine the oxidation time necessary for the treatment level desired and whether pretreatment of the water is necessary. Full-scale oxidation chamber size and the number of lamps are then selected.

The oxidation chamber is stainless steel. Lamps are horizontally mounted in quartz sleeves with fluoroelastomer seals. Indicators are provided to monitor performance of each lamp. Safety features include shop-wired and tested control panels interlocked with temperature and flow switches to shut off power at preset conditions.

The perox-pure™ system and its components are covered by numerous issued and pending patents.

Peroxidation Systems Inc.
5151 E. Broadway, Suite 600 Tucson, Arizona 85711 602-790-0303 FAX 602-790-0000

2.0 TESTING PROCEDURES

2.1 Description of Surface Water

On January 29, 1991, approximately 12 gallons of surface water was received from ERM at the PSI Laboratory in Tucson, Arizona. The surface water was contained in 4-liter amber glass bottles with no headspace.

Characterization of the surface water sample was performed by PSI to determine parameters of importance for **perox-pure™** treatment. The surface water as received contained iron and suspended solids which were removed via gravity filtration prior to performing bench-scale testing. The characterization results for the raw and filtered surface water are shown below. An analysis of the raw surface water revealed the presence of 80 μg/l of total PCBs. Naphthalene was not detected.

	Raw	Filtered
Visual Color:	Orange/ Cloudy	Clear/ Colorless
pH:	6.5	6.5
Iron (mg/l):	12.5	2.5-1.8*
Chloride (mg/l):	14,250	14,250
Total Organic Carbon (mg/l):	7	7
Total Dissolved Solids (mg/l):	12,100	13,100
Est. Suspended Solids (mg/l):	<20	<0.2
Alkalinity (mg/l):	150	110
Turbidity (FTU):	85	<5

* Several iron removal methods were investigated as part of the bench-scale testing variables.

2.2 Testing Protocol

The bench-scale **perox-pure™** test unit was charged by placing an aliquot of the water into a recycle reservoir. A pump was started which circulated the solution through the UV oxidation chamber and back into the reservoir providing continual mixing in the closed system. Sulfuric acid was added to the surface water at this time to adjust the pH for certain tests.

The UV lamp was illuminated to start a test, and H2O2 was added as required to maintain a constant concentration in solution. The solution temperature was controlled through use of an in-line cooling coil. All materials in contact with the solution were glass, quartz, stainless steel, viton or teflon.

After the appropriate oxidation times, samples of the treated water were collected in 1-liter amber glass bottles. An untreated sample was also collected in the same way. These samples were shipped to Golden State Analytical in Van Nuys, California for PCB analyses.

3.0 TESTING RESULTS

Four **perox-pure**™ treatment tests were performed on the contaminated surface water. These tests were designed to determine the effects of pH adjustment, H_2O_2 dosage, and iron removal efficiency on the rate of PCB destruction. The test conditions are shown in Table 1.

Table 1

Bench-Scale **perox-pure**™ Treatment Conditions for the Contaminated Surface Water

Test	H2O2 in Solution (mg/l)	Initial pH	Iron Removal* (Method; mg/l)
1	50	4.5	I ; 0.18
2	50	4.9	II ; 2.5
3	50	6.8	I ; 0.25
4	25	5.3	I ; 0.18

* Method I - Addition of 50 mg/l of H_2O_2, followed by filtration through 5 μ media.
Method 2 - Filtration through 5 μ media.
mg/l = Iron concentration after filtration.

The analytical results for the four tests are shown in Table 2. The analytical reports are provided in Appendix A. The results for Test 1 demonstrate rapid destruction of the PCBs to below the 5 μg/l analytical detection limit. Although the PCB concentration was below the detection limit in every treated sample from Tests 2, 3, and 4, the influent PCB concentration for these tests was either unknown or below the detection limit as well. Thus, it is not possible to evaluate the effects of the test variables.

One possible explanation for the variation in PCB concentration in the influent surface water samples is the affinity of PCBs for adsorption onto solids. Test 1 was performed on the same day the surface water samples arrived at the PSI lab. Tests 2, 3, and 4 were conducted three days later after the analytical results from Test 1 had been evaluated. During the time between the treatment tests, it is possible that the PCBs adhered to the surface of the suspended solids in the surface water and were subsequently removed during filtration.

Because of the minimum amount of treatability information received from this study, the projection of full-scale **perox-pure**™ treatment conditions is difficult for the contaminated surface water. Therefore, PCB destruction rate data from previous **perox-pure**™ treatability studies conducted by PSI on similar water samples will be used in addition to the rate data from Test 1.

65/

Table 2

Bench-Scale **perox-pure**™ Treatment Results for the Contaminated Surface Water

Test	Full-Scale Oxidation Time (min)	PCBs (μg/l)
1	0	57
	1.5	<5
	3.0	<5
	6.0	<5
2	0	NA*
	0.5	<5
	1.0	<5
3	0	NA
	0.5	<5
	1.0	<5
4	0	<5
	0.5	<5
	1.0	<5

* Not analyzed.

66/

GOLDEN STATE
Analytical Services, Inc.
15735-1 Strathern St. • Van Nuys • CA 91406
Tel: (818) 376-1122 • Fax: (818) 781-8128

Client:	Peroxidation Systems, Inc.	Matrix:	Water
Project Name:	ERM N.E.	Date Received:	02/04/91
Project#:	N/A	Date Analyzed:	02/06/91
P.O.#:	N/A	GSAS Job#:	6234

PCBs (608)
ug/L (ppb)

Client Sample#: GSAS Sample#:	ENE 2-1 GS-0291-004	ENE 2-2 GS-0291-005	ENE 3-1 GS-0291-006	Reporting Limits
PCB - 1016	BRL	BRL	BRL	5.0
PCB - 1221	BRL	BRL	BRL	5.0
PCB - 1232	BRL	BRL	BRL	5.0
PCB - 1242	BRL	BRL	BRL	5.0
PCB - 1248	BRL	BRL	BRL	5.0
PCB - 1254	BRL	BRL	BRL	5.0
PCB - 1260	BRL	BRL	BRL	5.0

BRL: Below Reporting Limit

Approved By: Dr. B. Gene Bennett

Dr. B. Gene Bennett

67/

GOLDEN STATE
Analytical Services, Inc.
15735-1 Strathern St. • Van Nuys • CA 91406
Tel: (818) 376-1122 • Fax: (818) 781-8128

Client:	Peroxidation Systems, Inc.	Matrix:	Liquid
Project Name:	ERM N.E.	Date Received:	01/30/91
Project#:	N/A	Date Analyzed:	01/30-31/91
P.O.#:	N/A	GSAS Job#:	6221

PCBs (608)
ug/L (ppb)

Client Sample#:	ENE 1-2	ENE 1-3	Reporting Limits
GSAS Sample#:	GS-0191-844	GS-0191-845	
PCB - 1016	BRL	BRL	5.0
PCB - 1221	BRL	BRL	5.0
PCB - 1232	BRL	BRL	5.0
PCB - 1242	BRL	BRL	5.0
PCB - 1248	BRL	BRL	5.0
PCB - 1254	BRL	BRL	5.0
PCB - 1260	BRL	BRL	5.0

BRL: Below Reporting Limit

Approved By: Dr. B. Gene Bennett

B. Gene Bennett

68/

PUMPS

Description: **P-100A, P-100B Flocculation Feed Pumps**

Capacity: 350 GPM

Operating Parameters:

TDH	55 FT.
BHP	10 HP
Speed	1700 RPM

Description: **P-102A, P-102B Filter Feed Pumps**

Capacity: 368 ~~390~~ GPM CJ 11/5/91

Operating Parameters: JDF 8/27/91

TDH	~~40~~ FT. 60 FT
BHP	~~10~~ HP 15 HP
Speed	1750 RPM

Description: **P-103A, P-103B Polishing Filter Feed Pumps**

Capacity: 350 ~~390~~ GPM JDF 8/27/91

Operating Parameters:

TDH	155 FT.
BHP	40 ~~20~~ HP
Speed	3700 RPM

JDF 8/27/91

ERM-New England, Inc. 205 Portland Street • Boston, Massachusetts 02114 • (617) 742-8228

Project NEW BEDFORD HOT SPOTS REMEDIATION W.O. No. 203-01-03 Sheet 1 of 2
Subject DESIGN BASIS By JDF Date 5/1/91
PUMP CALCULATIONS Chkd. by FS Date 5/2/91

EQUALIZATION TANK (CELL NO. 2) TRANSFER PUMPS P-100A,B

TOP ELEVATION OF FLOCCULATION TANK = 25 FT (ASSUMED)
MINIMUM WATER ELEVATION IN EQUAL. TANK = 5.5 FT + 1.0 FT = 6.5 FT ✓
FLOW RATE = 350 GPM
STATIC HEAD = 25 FT − 6.5 FT = 18.5 FT
LENGTH OF PIPING = 400 FT (ASSUME)

FITTINGS	NUMBER
PLUG VALVES	3
CHECK VALVE	1
ELBOWS 90°	10
STATIC MIXER	1
FLOW ELEMENT	1
CONTROL VALVE (BUTTERFLY)	1

ASSUME PIPE DIAMETER OF 6"

EQUIVALENT LENGTHS OF PIPE

FITTING	NUMBER	EQUIVALENT LENGTH	TOTAL
PLUG VALVE	3	165 LF	495
CHECK VALVE	1	45 LF	45
ELBOW 90°	10	35 LF	350

TOTAL EQUIVALENT LENGTH OF PIPE FOR FITTINGS = 890 LF

HEAD LOSS FOR OTHER FITTINGS

STATIC MIXER	1	5 FT
FLOW ELEMENT	1	5 FT
BUTTERFLY VALVE	1	10 FT

HEAD LOSS FOR SELECTED FITTINGS = 20 FT

HAZEN WILLIAMS EQUATION

$$h_f = \left[V / \left(1.318\, C\, R_H^{0.63} \right) \right]^{1.85}$$

$$V = \frac{350 \text{ GPM} (1 \text{ MIN}/60 \text{ SEC})}{\frac{\pi (6/12)^2}{4} (7.48 \text{ GAL}/\text{FT}^3)} = 3.97 \text{ FT/SEC}$$

$C = 120$ ASSUMED

$$R_H = D/4 = \frac{(6/12)}{4} = 0.13 \text{ FT}$$

$$h_f = \left[3.97 \text{ FT/SEC} / \left(1.318 (120)(0.13 \text{ FT})^{0.63} \right) \right]^{1.85}$$

$$h_f = 0.01 \text{ FT/LF}$$

$$h_f = 0.01 \text{ FT/LF} (400 \text{ LF} + 890 \text{ LF}) = 12.9 \text{ FT}$$

ERM-New England, Inc. 205 Portland Street • Boston, Massachusetts 02114 • (617) 742-8228

Project NEW BEDFORD HOT SPOTS REMEDIATION W.O. No. 208-01-08 Sheet 2 of 2
Subject DESIGN BASIS By JDF Date 5/1/91
PUMP CALCULATIONS Chkd. by FS Date 5/2/91

TOTAL DYNAMIC HEAD = STATIC HEAD + FRICTION LOSSES

= 18.5 FT + 12.9 + 20 FT

= 51.4 FT SAY 55 FT

$$BHP = \frac{350 \times 55}{3960 \times 0.55} = 8.8 \text{ Hp} \quad \text{SAY } 10 \text{ Hp}$$

ASSUME PIPE DIAMETER OF 8"

EQUIVALENT LENGTHS OF PIPE

FITTING	NUMBER	EQUIVALENT LENGTH	TOTAL
PLUG VALVE	3	200 LF	600 LF
CHECK VALVE	1	52 LF	52 LF
ELBOW 90°	10	45 LF	450 LF

TOTAL EQUIVALENT LENGTH OF PIPE FOR FITTINGS = 1,102 LF

HEAD LOSS FOR OTHER FITTINGS

STATIC MIXER	1	5 FT
FLOW ELEMENT	1	5 FT
BUTTERFLY VALVE	1	10 FT
HEAD LOSS FOR SELECTED FITTINGS		20 FT

HAZEN WILLIAMS EQUATION

$$V = \frac{350 \text{ GPM } (1 \text{ MIN}/60 \text{ SEC})}{\frac{\pi (8/12)^2}{4} (7.48 \text{ GAL}/\text{FT}^3)} = 2.23 \text{ FT/SEC}$$

C = 120 ASSUMED

$$R_H = D/4 = \frac{8/12}{4} = 0.17 \text{ FT}$$

$$h_f = \left[2.23 \text{ FT/SEC} / \left(1.318 (120)(0.17 \text{ FT})^{0.63} \right) \right]^{1.85}$$

$$= 0.003 \text{ FT/LF}$$

$$h_f = 0.003 \text{ FT/LF} (400 \text{ LF} + 1102 \text{ LF}) = 4.5 \text{ FT}$$

TOTAL DYNAMIC HEAD = STATIC + FRICTION LOSSES

= 18.5 FT + 4.5 FT + 20 FT

= 43 FT SAY 45 FT

$$BHP = \frac{350 \times 45}{3960 \times 0.55} = 7.2 \text{ Hp} \quad \text{SAY } 10 \text{ Hp}$$

THEREFORE USE 6" Φ TRANSFER PIPING

ERM-New England, Inc. 205 Portland Street • Boston, Massachusetts 02114 • (617) 742-8228

Project NEW BEDFORD HOT SPOT REMEDIATION W.O. No 208-01-08 Sheet 1 of 3
Subject DESIGN BASIS By JDF Date 5/1/91
PUMP CALCULATIONS Chkd. by FS Date 5/2/91

SECONDARY SETTLING (CELL NO. 3) TO SAND FILTER P-102A,B

MINIMUM OPERATING ELEVATION IN CELL NO. 3 = 7 FT
MAXIMUM ELEVATION DISCHARGE TO SAND FILTER = ~~23~~ 43.2 FT (~~SAY 25 FT~~) (SAY 45)
FLOW RATE = ~~390~~ 368 GPM
STATIC HEAD = ~~25~~ 43 FT − 7 FT = ~~18~~ 38 FT
LENGTH OF PIPING = 400 FT (ASSUMED)

FITTINGS	NUMBER
PLUG VALVES	2
CHECK VALVE	1
ELBOWS 90°	5
FLOW ELEMENT	1
CONTROL VALVE (BUTTERFLY)	1

ASSUME PIPE DIAMETER OF 8"

EQUIVALENT LENGTHS OF PIPE

FITTING	NUMBER	EQUIVALENT LENGTH	TOTAL
PLUG VALVE	2	200 LF	400 LF
CHECK VALVE	1	52 LF	52 LF
ELBOW 90°	5	45 LF	225 LF

TOTAL EQUIVALENT LENGTH OF PIPE FOR FITTING = 677 LF
SAY 700 LF

HEAD LOSS FOR OTHER FITTINGS

FLOW ELEMENT	1	5 FT
CONTROL VALVE	1	10 FT

HEAD LOSS FOR SELECTED FITTINGS 15 FT

HAZEN WILLIAMS EQUATION

$$V = \frac{\cancel{390}\ 368\ GPM\,(1\ MIN/60\ SEC)}{\frac{\pi(8/12)^2}{4}\,(7.48\ GAL/FT^3)} = \cancel{2.49}\ 2.35\ FT/SEC$$

$C = 120$

$$R_H = \frac{D}{4} = \frac{(8/12)}{4} = 0.13\ FT$$

$$h_f = \left[\cancel{2.49}\ 2.35\ FT/SEC \,/\, (1.318\,(120)(0.13\ FT)^{0.63}\right]^{1.85}$$

$$= \cancel{0.005}\ 0.004\ FT/LF$$

$$= \cancel{0.005}\ 0.004\ FT/LF\ (700\ LF + 400\ LF) = \cancel{5.8}\ 4.9\ FT$$

TOTAL DYNAMIC HEAD = STATIC + FRICTION
$= \cancel{18}\ 38\ FT + 15\ FT + \cancel{5.8}\ 4.9\ FT = \cancel{38.8\ FT}\ \cancel{58.3}\ \cancel{40\ FT}\ 60$ SAY 40 FT

57.9

1/15/91

ERM-New England, Inc. 205 Portland Street • Boston, Massachusetts 02114 • (617) 742-8228

Project NEW BEDFORD HOT SPOT REMEDIATION W.O. No. 208-0-08 Sheet 2 of 3
Subject DESIGN BASIS By JDF Date 5/2/91
PUMP CALCULATIONS Chkd. by FS Date 5/2/91

$$BHP = \frac{\cancel{350}\ 368 \times \cancel{40}\ 60}{3960 \times 0.55} = \cancel{6.43}\ \cancel{10.1}\ 10.1\ Hp \quad \text{SAY } \cancel{10}\ 15\ Hp$$

(Discharge) P-103A,B

SAND FILTER TO ~~PRESSURE (POLISHING) FILTER~~

MA 7/25

WATER ELEVATION IN SAND FILTER = SAY ~~28~~ 43.2 FT
PRESSURE LOSS THROUGH SAND FILTER = SAY 3 FT
FLOW RATE = 350 GPM
PRESSURE DROP THROUGH POLISHING FILTER FROM SPECIFICATIONS — CLEAN = 0.5 PSI = 1.2 FT; DIRTY = 75 PSI = 173.3 FT
PRESSURE DROP THROUGH UV/OXIDATION UNIT (FROM SPEC) = 6 PSI = 13.9 FT
LENGTH OF PIPE = ASSUME 1000 FT

FITTINGS	NUMBER
PLUG VALVE	~~8~~ 0
CHECK VALVE	1
ELBOWS 90°	20
FLOW ELEMENT	1
CONTROL VALVE (BUTTERFLY)	1
Gate Valves	10

ASSUME PIPE DIAMETER OF 8"

EQUIVALENT LENGTHS OF PIPE

FITTING	NUMBER	EQUIVALENT LENGTH	TOTAL
PLUG VALVE	~~8~~ 0	200 LF	~~1600~~ 0 LF
CHECK VALVE	1	52 LF	52 LF
ELBOWS 90°	20	45 LF	900 LF
Gate Valves	10	~~25~~ 23	~~250~~

TOTAL EQUIVALENT LENGTH OF PIPE FOR FITTING = ~~2,552~~ LF/202
SAY ~~2600~~ LF 1500

MA 7/24

HEADLOSS FOR OTHER FITTINGS

FLOW ELEMENT	1	5 FT
CONTROL VALVE	1	10 FT

HEADLOSS FOR SELECTED FITTINGS 15 FT

HAZEN WILLIAMS EQUATION

$$V = \frac{350\ GPM\ (1\ MIN/60\ SEC)}{\frac{\pi\,(8/12)^2}{4}\,(7.48\ GAL/FT^3)} = 2.23\ FT/SEC$$

$C = 120$

$$R_H = \frac{D}{4} = \frac{(8/12)}{4} = 0.17\ FT$$

ERM-New England, Inc. 205 Portland Street • Boston, Massachusetts 02114 • (617) 742-8228

Project NEW BEDFORD HOT SPOTS REMEDIATION W.O. No. 208-01-03 Sheet 3 of 3
Subject DESIGN BASIS By JDF Date 5/2/91
PUMP CALCULATIONS Chkd. by FS Date 5/2/91

$h_f = [\ 2.23\ FT/SEC\ /\ (1.318)(120)(0.17\ FT)^{0.63}\ ]^{1.85}$

$= 0.003\ FT/LF$

$= 0.003\ FT/LF\ (1000LF + \cancel{2600}\ 1500\ LF)$

$= \cancel{10.7}\ 7.5\ FT$

MA 7/25

OPERATING RANGE

CLEAN PRESSURE (POLISHING) FILTER

TOTAL DYNAMIC HEAD = STATIC + FRICTION (POLISHING FILTER + UV UNIT + PIPE LOSSES)

$= 0 + 1.2FT + 13.9\ FT + \cancel{10.7}\ 7.5\ FT + 15\ FT$

$= \cancel{40.8}\ 37.6\ FT$ SAY 41 FT

DIRTY PRESSURE FILTER = MAXIMUM PRESSURE DROP = 50 PSI = 115.5 FT

TDH $= 0 + 115.5FT + 13.9FT + 10.7FT + 15FT$

$= 155.1\ FT$ SAY 155 FT

$BHP_{(clean)} = \frac{390 \times 41}{3960 \times 0.55} = 7.3$, SAY 10 HP

$BHP_{(Dirty)} = \frac{390 \times 155}{3960 \times 0.55} = 27.75$, SAY 40 HP

Description: **Piping**

Location:	Size (diameter in.)
Flocculation tank to secondary settling	6
Backwash filter to Polishing Filter	8

ERM-New England, Inc. 205 Portland Street • Boston, Massachusetts 02114 • (617) 742-8228

Project NEW BEDFORD HOT SPOTS REMEDIATION W.O. No. 208-01-08 Sheet 1 of 2
Subject DESIGN BASIS By JDF Date 5/1/91
PIPING CALCULATIONS Chkd. by FS Date 5/2/91

TRANSFER LINE FROM FLOCCULATION TANK TO SECUNDARY SETTLING (CELL NO.3)

TRANSFER LINE FLOWS BY GRAVITY
WATER LEVEL IN FLOCCULATION TANK = 25 FT (ASSUMED)
OPERATING LEVEL IN CELL NO.3 = 13 FT (MAXIMUM)
AVAILABLE STATIC HEAD = 25 FT - 13 FT = 12 FT

LENGTH OF PIPE = 400 FT (ASSUMED)

FITTINGS	NUMBER
PLUG VALVES	1
ELBOWS	5

ASSUME PIPE DIAMETER OF 6"

EQUIVALENT LENGTH OF PIPE

FITTING	NUMBER	EQUIVALENT LENGTH	TOTAL
PLUG VALVE	1	165 LF	165 LF
ELBOWS 90°	5	35 LF	175 LF

TOTAL EQUIVALENT LENGTH OF PIPE FOR FITTINGS = 340 LF

HAZEN WILLIAMS EQUATION

$$V = \frac{\cancel{390}^{368}\ \text{GPM}\,(1\ \text{MIN}/60\ \text{SEC})}{\frac{\pi\,(6/12)^2}{4}\,(7.48\ \text{GAL}/\text{FT}^3)} = \cancel{4.43}^{4.2}\ \text{FT/SEC}$$

94 11/15/91

$C = 120$ ASSUMED

$$R_H = D/4 = \frac{6/12}{4} = 0.13\ \text{FT}$$

$$h_f = \left[\cancel{4.43}^{4.2}\ \text{FT/SEC} / (1.318\,(120)(0.13\ \text{FT})^{0.63}\right]^{1.85}$$

$$= \cancel{0.0145}^{0.013}\ \text{FT/LF}$$

$$= \cancel{0.014}^{0.013}\ \text{FT/LF}\ (400\ \text{LF} + 340\ \text{LF}) = \cancel{10.7}^{9.6}\ \text{FT}$$

STATIC HEAD - FRICTION LOSS = 2.4
12 FT - ~~10.7~~ 9.6 = ~~1.3~~ FT

THEREFORE WASTEWATER WILL FLOW BY GRAVITY FROM FLOCCULATION CHAMBER TO CELL NO. 3 (SECUNDARY SETTLING) FOR 6" ø PIPE

ERM-New England, Inc. 205 Portland Street • Boston, Massachusetts 02114 • (617) 742-8228

Project NEW BEDFORD HOT SPOTS REMEDIATION W.O. No. 208-01-03 Sheet 2 of 2
Subject DESIGN BASIS By JDF Date 5/1/91
PIPING CALCULATIONS Chkd. by FS Date 5/2/91

ASSUME PIPE DIAMETER OF 8"

EQUIVALENT LENGTH OF PIPE

FITTING	NUMBER	EQUIVALENT LENGTH	TOTAL
PLUG VALVE	1	200LF	200LF
ELBOWS 90°	5	45LF	225LF
TOTAL EQUIVALENT LENGTH OF PIPE FOR FITTINGS			425LF

HAZEN WILLIAMS EQUATION

$$V = \frac{\cancel{390}\ 368\ GPM\,(1\,MIN/60\,SEC)}{\pi\frac{(8/12)^2}{4}\,(7.48\ GAL/FT^3)} = \cancel{2.49}\ 2.35\ FT/SEC$$

C = 120

$$R_H = D/4 = \frac{8/12}{4} = 0.17\ FT$$

$$h_f = \left[\cancel{2.47}\ 2.35\ FT/SEC \,/\, (1.318(120)(0.17\,FT)^{0.63}\right]^{1.85}$$

$$= \cancel{0.0036}\ 0.0033\ FT/LF$$

$$= \cancel{0.0036}\ 0.0033\ FT/LF\,(400\,LF + 425\,LF) = \cancel{3.0}\ 2.7\ FT$$

STATIC HEAD − FRICTION LOSS = 9.3

$$12\,FT - \cancel{3.0}\ 2.7\ FT = \cancel{9.0}\ 9.3\ FT$$

THEREFORE WASTEWATER WILL FLOW WITH A LIMITED HEADLOSS FROM FLOCCULATION CHAMBER TO CELL NO. 3 (SECONDARY SETTLING) FOR 8" ϕ PIPE HOWEVER, BASED ON CALCULATIONS, A 6" ϕ PIPE WILL BE SUFFICIENT

ERM-New England, Inc. 205 Portland Street • Boston, Massachusetts 02114 • (617) 742-8228

Project New Bedford Hot Spots W.O. No. 208-01-09 Sheet 1 of 1
Subject Design Basis - Piping By DJM Date 6/20/91
Chkd. by JDF Date 9/27/91

Piping from Backwash Filter to Polishing Filter Feed Sump.

Basis
1. Transfer Line flows by Gravity
2. Water Level at Backwash Filter = 41
3. Invert Elevation of Exit Pipe = 29.25
4. Available Static head = 41 - 29.25 = 11.75
5. Length of Pipe = 55 ft
6. Fittings (1) Plug Valve

Assume Pipe Diameter of 8"

Equivalent Length of Pipe
(1) Plug Valve = 200 L.F.
(2) Elbows = 90 L.F
Total = 290 L.F

$V = 2.49$ Ft/sec, $C = 120$

Hazen Williams Equation

$$R_H = D/4 = \frac{8/12}{4} = 0.17 \text{ ft.}$$

$$h_f = \left[2.49/1.318(120)(0.17)^{.63}\right]^{1.85} = 0.0036 \text{ Ft/LF}$$

$$= 0.0036 \text{ Ft/LF}(55 \text{ L.F} + 290 \text{ L.F}) = 1.242$$

STATIC Head - Friction Loss =

11.75 - 1.24 = 10.51 FT

∴ 8"Ø Pipe Sufficient

The ERM Group Environmental Resources Management, Inc. • Exton, Pennsylvania 19341 • (215) 524-3500

Project New Bedford Harbor - Hot Spot W.O. No. ~~FDO-59-02-31~~ Sheet 1 of 2
Subject Hydraulic Profile By SPS Date 3/28/91
Chkd. by SCS Date 5/15/91

CDF CELL 1 to 2

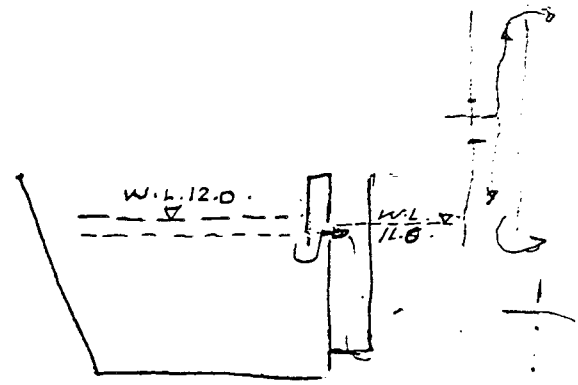

$Q = 2100$ GPM
$= 281$ cfm
$= 4.7$ c.f.s.

$v = \frac{Q}{A} = \frac{4.7}{3 \times .58}$

$= 2.7$ ft/sec.

Head loss (contriction & expansion) $= 1.5 \frac{v^2}{2g} = \frac{1.5 \times 2.7^2}{64.4} = .17'$

misc. losses $= .08'$
$.25'$

Allow 9" Free board $= .75'$ (7½" Fall reqd. for 3' weir - 5¼" Fall reqd. for 5' weir. Rectangle)

∴ Total Head loss $= .75' + .25' = 1.0'$.

∴ water Elev. in Equalization tank $= 13.0 - 1.0 = 12.0'$.

Flocculator to CDF cell 3

$Q = \cancel{375}\ 368$ GPM

L = 100' - 8" ø PVC Pipe @ .5% slope from the Bldg. to cell #3

Inv. El. $15.5 - (-100 \times .005) = 15.5$ @ Bldg. say 16.25'

Wilinski 11/15/91

79/

Solids Treatment Process Flow Diagram

80

ERM-New England, Inc.

205 Portland Street • Boston, Massachusetts 02114 • (617) 742-8228

Project _____ W.O. No. _____ Sheet _____ of _____

Subject _____ By _____ Date _____

Chkd. by _____ Date _____

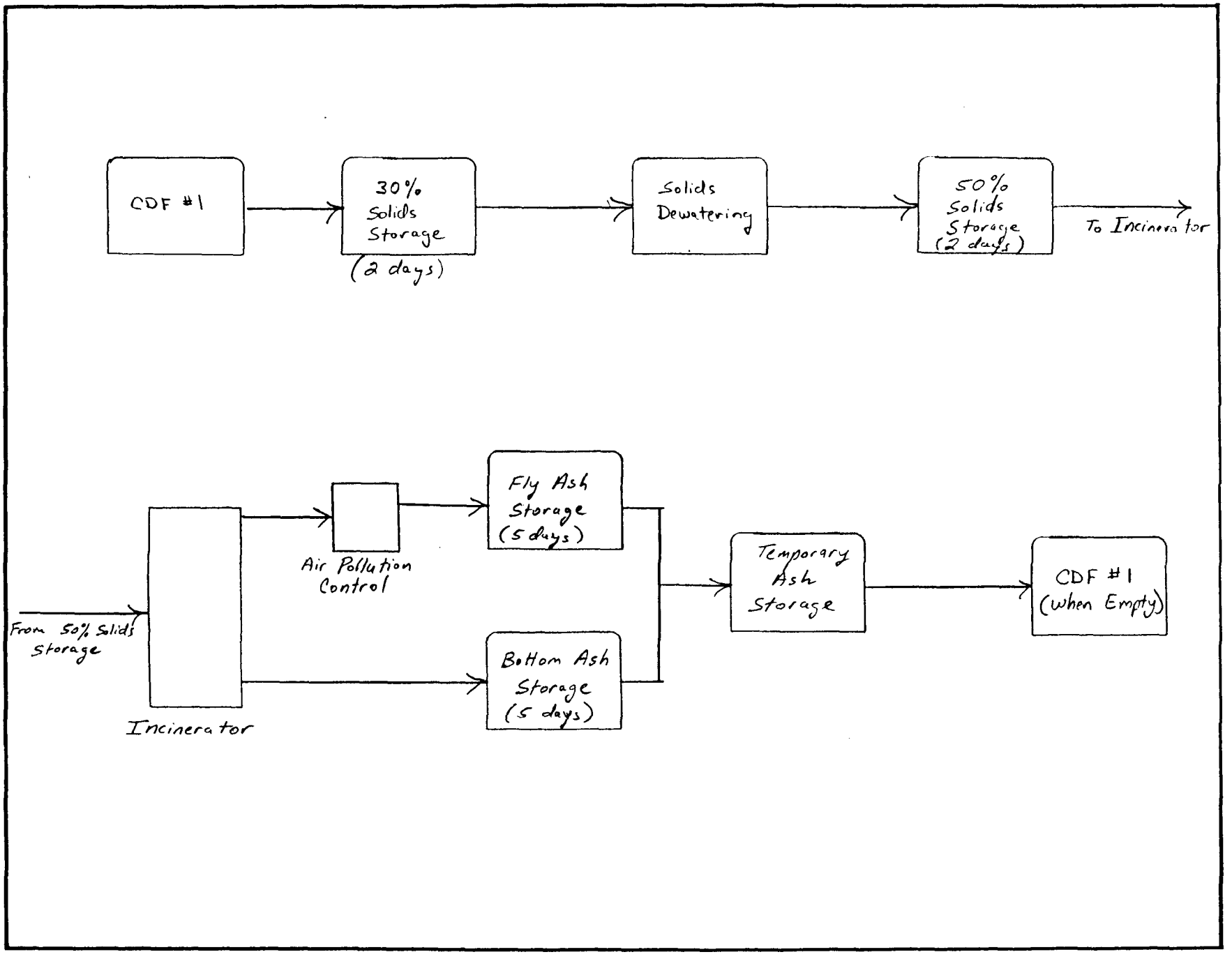

Description: **Solids Dewatering System**

Model: Plate and Frame

Capacity: Minimum Capacity to be determined based on incinerator requirements.

Operating Parameters:

Cake Solids Content - 50%
Influent Solids Content - 30%
Filtrate - returned to CDF Cell No. 2

ERM-New England, Inc. 205 Portland Street • Boston, Massachusetts 02114 • (617) 742-8228

Project New Bedford Hot Spots W.O. No. 208-01-09 Sheet 1 of
Subject Plate and Frame Pressure Filter By DJM Date 6/28/91
Chkd. by JF Date 8/27/91

Basis
Influent Solids Content - 30%
Cake Solids Content - 50%
Incinerator feed rate - 14,000 pounds/hr.
Cake density - 70 lb/ft^3

Size dewatering equipment to treat average sludge load of 14,000 pounds/hr.

$$\text{Average Volume (In)} = \frac{14{,}000 \text{ lb/hr}}{(.3)(8.34 \text{ lb/gal})} = 5595.5 \text{ gal/hr}$$

say 5600 gal/hr.
or 750 ft^3/hr.

$$\text{Dewatered Volume} = \frac{14{,}000 \text{ lb/hr}}{(.5)(70 \text{ lb/ft}^3)} = 400 \text{ ft}^3/\text{hr}$$

Size of filter press assuming 3 ft^3 volume per chamber

$$\#\text{ of chambers/hr} = \frac{400 \text{ ft}^3/\text{hr}}{3 \text{ ft}^3/\text{chamber}} = 133.3 \text{ chambers/hr}$$

say 135 chambers/hr

∴ Therefore, 135 chambers are needed to maintain a feed rate to incinerator of 7 tons/hr. This assumes that the filter press cycle time is one hour. If the cycle time increases, more chambers will be needed.

Description: **Incineration**

Capacity: 7 tons/hr

Operating Parameters:

Influent Solids Concentration - 50%

84/

(1)

INPUT SCREEN NO. 1 <<TYPE "all" E TO START EXE FOUR NINES, INC.

DATA FILE - KILN
CUSTOMER - ERM
PROJECT - 9008-004 -- NEW BEDFORD
DESCRIPTION - KILN CALCULATIONS
7 TPH SOILS -- 50% WATER
ENGINEER - SHM
TODAY IS - 04/19/91

HEAT LOSS %	-	3.00
MM BTU/HR		0.00
COMBUSTION AIR		
HUMIDITY, LB H2O/LB DRY AIR	-	0.01
TEMPERATURE, DEG F	-	60.00
INCINERATOR TEMPERATURE, DEG F	-	1800.00
INCINERATOR PRESSURE, " WC	-	-0.50
NO. OF SCREENS	-	3

INPUT SCREEN NO. 2

% ASH CARRIED WITH FLUE GAS	-	10.00
ASH DISCHARGE TEMP, DEG F	-	0.00
USE WATER COOL ASH (YES = 1)	-	0
ASH COOLING WATER TEMP, DEG F	-	0.00
KILN GAS & ASH EXIT TEMP DIF, DEG F		0.00
% OXYGEN REPLACEMENT (WT)	-	0.00
FUEL NITROGEN CONVERTED TO NO, %	-	0.00

(WASTE NO. 1 THROUGH 6 ONLY)

KILN INPUT

INPUT SCREEN NO. 3 - XS AIR = 25.00 % **********

WASTE NO.	1	2	3	4	5	6	TOTAL
WASTE ID	SOILS	NAT.GAS					
LB/HR	14000.00	1523.02	0.00	0.00	0.00	0.00	15523
BTU/LB	82.00	23879.00	0.00	0.00	0.00	0.00	2416.81
MMBTU/HR	1.15	36.37	0.00	0.00	0.00	0.00	37.52
ATOMIZING							
LB/LB AIR	0.00	0.00	0.00	0.00	0.00	0.00	0.00
LB/LB STM	0.00	0.00	0.00	0.00	0.00	0.00	0.00
COMPOS'N	100.00	100.00	0.00	0.00	0.00	0.00	LB/HR
C	0.49	75.00	0.00	0.00	0.00	0.00	1211
H	5.58	25.00	0.00	0.00	0.00	0.00	1161
O	44.44	0.00	0.00	0.00	0.00	0.00	6222
N	0.00	0.00	0.00	0.00	0.00	0.00	0
S	0.00	0.00	0.00	0.00	0.00	0.00	0
CL	0.49	0.00	0.00	0.00	0.00	0.00	68
F	0.00	0.00	0.00	0.00	0.00	0.00	0
BR	0.00	0.00	0.00	0.00	0.00	0.00	0
ASH	49.00	0.00	0.00	0.00	0.00	0.00	6860
TOTAL	100.00	100.00	1.00	1.00	1.00	1.00	15523

85/

DATA FILE - KILN

(2)

RESULTS SCREEN NO. 1
COMBUSTION AIR

WASTE	LB/HR	SCFM
1 - 6	34564	7643
7 - 12	0	0
13 - 18	0	0
19 - 24	0	0
TOTAL	34564	7643

TOTAL INPUT

WASTE	MMBTU/HR	LB/HR	
1 - 6	37.52	15523	
7 - 12	0.00	0	
13 - 18	0.00	0	
19 - 24	0.00	0	
ATOM STEAM	0.00	0	
ATOM AIR	0.00	0	0.00 SCFM
COMB AIR	0.49	34564	
OXYGEN	0.00	0	
ASH COOLING WATER	0.00	0	
TOTAL	38.01	50087	

RESULTS SCREEN NO. 2
FLUE GAS COMPOSITION 1800.00 DEG F

	LB/HR	MOLE/HR	%MOL WET	%MOL DRY	BTU/LB
O2	1571	49.10	2.90	4.50	430.97
N2	26298	939.23	55.45	86.07	466.48
NO	0	0.00	0.00	0.00	452.40
CO2	4441	100.94	5.96	9.25	472.29
H2O	10846	602.55	35.58		1981.59
SO2	0	0.00	0.00	0.00	328.04
HCL	70	1.92	0.11	0.18	345.65
HBR	0	0.00	0.00	0.00	157.43
HF	0	0.00	0.00	0.00	612.70
ASH	686				522.00
TOTAL	43913	1693.73	100.00	100.00	

KILN GASES

FLUE GAS AT	43913	LB/HR	46608	ACFM	9.858 GR/DSCF@7
	1800.00	DEG F	36.92	MMBTU/HR	0.000 GR/DSCF@7
ASH FLOW AT	6174.00	LB/HR	1800.00	DEG F	3.22 MMBTU/HR
TOTAL OUTPUT IS	50087	LB/HR	40.14	MMBTU/HR	
HEAT LOSS IS	1.14	MMBTU/HR			

86/

(3)

AFTERBURNER CALCULATIONS <<TYPE "alt" E TO START EXE FOUR NINES, INC.

DATA FILE - SCC
CUSTOMER - ERM
PROJECT 9008 004 -- NEW BEDFORD
DESCRIPTION - SCC CALCULATIONS
7 TPH SOILS -- 50% WATER
ENGINEER - SHM
TODAY IS - 04/19/91

HEAT LOSS %	-	3.00
MM BTU/HR	-	0.00
COMBUSTION AIR		
HUMIDITY, LB H2O/LB DRY AIR	-	0.01
TEMPERATURE, DEG F	-	60.00
AFTERBURNER TEMPERATURE, DEG F	-	2200.00
AFTERBURNER PRESSURE, " WC	-	-1.00
% OXYGEN REPLACEMENT (WT)	-	0.00
FUEL NITROGEN CONVERTED TO NO, %	-	0.00

INPUT SCREEN NO. 2 - XS AIR = 10.00 % **********

FUEL NO.	1	2	3	4	5	6	
FUEL ID	NAT.GAS	SCC INPUT					TOTAL
LB/HR	1019.51	0.00	0.00	0.00	0.00	0.00	1020
BTU/LB	23879.00	0.00	0.00	0.00	0.00	0.00	23879
MMBTU/HR	24.34	0.00	0.00	0.00	0.00	0.00	24.34
ATOMIZING							
LB/LB AIR	0.00	0.00	0.00	0.00	0.00	0.00	0.00
LB/LB STM	0.00	0.00	0.00	0.00	0.00	0.00	0.00
COMPOS'N	100.00	0.00	0.00	0.00	0.00	0.00	LB/HR
C	75.00	0.00	0.00	0.00	0.00	0.00	765
H	25.00	0.00	0.00	0.00	0.00	0.00	255
O	0.00	0.00	0.00	0.00	0.00	0.00	0
N	0.00	0.00	0.00	0.00	0.00	0.00	0
S	0.00	0.00	0.00	0.00	0.00	0.00	0
CL	0.00	0.00	0.00	0.00	0.00	0.00	0
F	0.00	0.00	0.00	0.00	0.00	0.00	0
BR	0.00	0.00	0.00	0.00	0.00	0.00	0
ASH	0.00	0.00	0.00	0.00	0.00	0.00	0
TOTAL	100.00	100.00	1.00	1.00	1.00	18.00	1020

INPUT SCREEN NO. 3**********

FLUE GAS INLET TEMPERATURE: 1800.00 DEG F

FLUE GAS COMPOSITION:

		MOLE/HR	%MOL WET	%MOL DRY	BTU/LB
O2	1571	49.10	2.90	4.50	430.97
N2	26298	939.23	55.45	86.07	466.48
NO	0	0.00	0.00	0.00	452.40
CO2	4441	100.94	5.96	9.25	472.29
H2O	10846	602.55	35.58		1981.59
SO2	0	0.00	0.00	0.00	328.04
HCL	70	1.92	0.11	0.18	345.65
HBR	0	0.00	0.00	0.00	157.43
HF	0	0.00	0.00	0.00	612.70
ASH	686				522.00
TOTAL	43913	1693.73	100.00	100.00	36.92
TOTAL	43913				

87/

(4)

DATA FILE - SCC

RESULTS SCREEN NO. 1

TOTAL INPUT:

	MMBTU/HR	LB/HR	
FUEL STREAMS 1 - 6	24.34	1020	
FLUE GAS IN	36.92	43913	
ATOM STEAM	0.00	0	
ATOM AIR	0.00	0	0 SCFM
COMB AIR	0.28	19738	4365 SCFM
OXYGEN	0.00	0	
TOTAL	61.54	64670	

RESULTS SCREEN NO. 2

FLUE GAS COMPOSITION 2200.00 DEG F

	LB/HR	MOLE/HR	%MOL WET	%MOL DRY	BTU/LB
O2	1979	61.84	2.53	3.63	538.76
N2	41316	1475.58	60.30	86.60	583.49
NO	0	0.00	0.00	0.00	556.40
CO2	7245	164.66	6.73	9.66	596.33
H2O	13374	742.99	30.36		2220.40
SO2	0	0.00	0.00	0.00	411.01
HCL	70	1.92	0.08	0.11	432.18
HBR	0	0.00	0.00	0.00	197.45
HF	0	0.00	0.00	0.00	764.18
ASH	686				642.00
TOTAL	64670	2446.99	100.00	100.00	

SCC DISCHARGE

FLUE GAS AT 64670 LB/HR 79352 ACFM 0 DSCFM
2200.00 DEG F 59.66 MMBTU/HR

HEAT LOSS IS 1.85 MMBTU/HR

5 87A/

QUENCH CALCULATIONS <<TYPE "alt" E TO START EXE FOUR NINES, INC.

DATA FILE - QNCH CUSTOMER - ERM
PROJECT - 9008-004 -- NEW BEDFORD
DESCRIPTION - QUENCH CALCULATIONS
7 TPH SOILS -- 50% WATER
ENGINEER - SHM TODAY IS - 04/19/91

QUENCH METHOD (1=BOILER, 2=WATER, 3=STEAM, 4=AIR, 5=ADIABATIC)- 5.00

STEAM GENERATED -	0	LB/HR	0	DEG F	0.00	PSIG
CONDENSATE RECY -	0	LB/HR	0.00	DEG F	0.00	%
BOILER BLOWDOWN -	0	LB/HR	0.00	% BY WT		
WATER FLOW RATE -	44961	LB/HR	89.92	GPM	80.00	DEG F
STEAM FLOW RATE -	0	LB/HR	0.00	DEG F	0.00	PSIG
AIR FLOW RATE -	0	LB/HR	0.00	SCFM	0.00	DEG F
HUMIDITY -	0.00	LB/LB DA;	CaO/N	0.00	0.00	DEG F
CaO FLOW RATE -	0	LB/HR	0.00	% CaO	0.00	% EXCESS
NaOH FLOW RATE -	0	LB/HR	0.00	% NaOH	0.00	% EXCESS
BLOW DOWN RATE -	7546	LB/HR	10.00	% SOLIDS/	0.00	% EXCESS
EFFICIENCY:	SCRUBBING	99.00 %	AS%	SOLIDS/	99.90	%

SCREEN NO. 2

	INPUT	DEG F 2200.00	OUTPUT	DEG F 188.30	IN WC -5.00	% VOL	% VOL
	LB/HR	BTU/LB	LB/HR	BTU/LB	MOLES/HR	WET	DRY
O2	1979	538.76	1979	28.24	61.84	1.35	3.63
N2	41316	583.49	41316	31.83	1475.58	32.32	86.69
NO	0	556.40	0	33.36	0.00	0.00	0.00
CO2	7245	596.33	7245	27.08	164.66	3.61	9.67
H2O	13374	2160.40	51544	1116.99	2863.56	62.72	
SO2	0	411.01	0	19.72	0.00	0.00	0.00
HCl	70	432.08	1	24.37	0.02	0.00	0.00
HBr	0	197.45	0	10.98	0.00	0.00	0.00
HF	0	764.18	0	42.09	0.00	0.00	0.00
ASH	686	642.00	1	38.49	0.00		
TOTAL	64670	58.86	102086	59.14	4565.66	100.00	100.00
CHECK	64670				36443	ACFM	
					0.007	GR/DSCF	
					0.006	GR/DSCF @ 7% O2	

Quench input

Quench out

Description: Solids Storage Facilities

Capacities:

	Volume (cu. ft.)
Pre-Solids Dewatering (2 days)	13,250
Post Solids Dewatering (2 days)	6750
Fly Ash Storage (5 days)	1650
Bottom Ash Storage (5 days)	5400
Total Ash Storage (80 days)	140,000

ERM-New England, Inc. 205 Portland Street • Boston, Massachusetts 02114 • (617) 742-8228

Project New Bedford Hot Spots W.O. No. Sheet 1 of
Subject Temporary Fly Ash Storage (5 days) By DJM Date 6/28/91
Temporary Bottom Ash Storage (5 days) Chkd. by JDF Date 8/29/91

Basis

Fly Ash production = 685 lb/hr (from computer model at 7 tons/hr feed)

Fly Ash moisture content = 50%

Specific gravity of solids = 2.2

Bottom Ash Production = 6174 lb/hr (from computer model)

Determine Temporary Fly Ash Storage (5 days)

$$\text{Volume per day} = \frac{2(685\ \text{lb/hr})(24\ \text{hr/day})}{62.4\ \text{lb/ft}^3(.5(2.2)+.5(1))} = 330\ \text{ft}^3$$

or 12.2 yd^3

Determine Temporary Bottom Ash Storage (5 days)

$$\text{Volume per day} = \frac{(6174\ \text{lb/hr})(24\ \text{hr/day})}{(62.4\ \text{lb/ft}^3)(2.2)} = 1080\ \text{ft}^3 \text{ or}$$

40 yd^3

ERM-New England, Inc. 205 Portland Street • Boston, Massachusetts 02114 • (617) 742-8228

Project NEW BEDFORD HARBOR HOT SPOT REMEDIATION W.O. No. 20801-08 Sheet 1 of 5
Subject TEMPORARY ASH STORAGE FACILITY By JDF Date 5/16/91
Chkd. by _____ Date _____

TEMPORARY BOTTOM ASH STORAGE

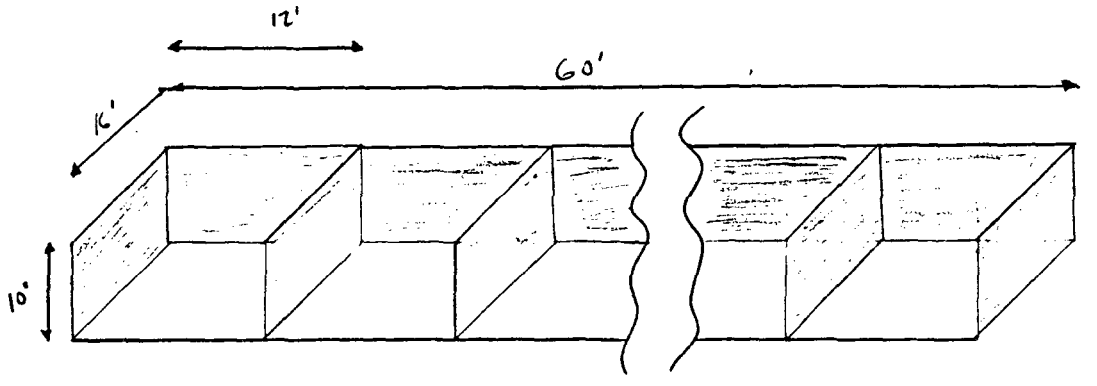

NOT TO SCALE

EACH DAY STORAGE BIN CAN HOLD A MAXIMUM OF

10' x 16' x 12' = 1920 CF = 71 CY
ASSUME ONLY 75% EFFECTIVE USAGE
(.75)(71 CY) = 53.3 CY

SAY 50 CY EACH BIN

CONSTRUCTION OF TEMPORARY BOTTOM ASH STORAGE BINS

BOTTOM CONCRETE SLAB

THICKNESS 6"
REINFORCED CONCRETE
FOOTER 5' DEEP 6" WIDE

VOLUME OF CONCRETE
SLAB
16' x 60' x 6" = 480 CF = 17.8 CY
FOOTER
[(60' x 2) + (16' x 2)] x 6" x 5' = 380 CF = 14.1 CY

TOTAL = 31.9 CY
SAY = 32 CY

ERM-New England, Inc. 205 Portland Street • Boston, Massachusetts 02114 • (617) 742-8228

Project NEW BEDFORD HARBOR HOT SPOTS REMEDIATION W.O. No. 203-01-03 Sheet 2 of 5
Subject By JDF Date 5/16/91
Chkd. by Date

SIDE WALLS

THICKNESS 6"
REINFORCED CONCRETE
SIDE WALLS 6
BACK WALLS 5

VOLUME OF CONCRETE
SIDEWALLS
6(10'x16'x 6") = 480 CF = 17.8 CY
BACKWALLS
5(12'x10'x 6") = 300 CF = 11.1 CY
TOTAL = 28.9 CY
SAY 30 CY

OPERATION WILL BE AS FOLLOWS

- AS BOTTOM ASH IS REMOVED FROM QUENCH TANK OF INCINERATOR IT WILL BE PLACED IN ONE OF THE BINS.
- WHEN A BIN IS FULL (APPROXIMATELY 50 CY) THE ASH MATERIAL WILL BE SAMPLED TO SEE IF IT MUST BE STABILIZED. SAMPLE WILL BE ANALYZED FOR LEACHABLE METALS BY TCLP TEST. (FEDERAL REGISTER, JUNE 29, 1990)
- IF THE TCLP RESULTS INDICATE THE MATERIAL DOES NOT NEED TO BE SOLIDIFIED/STABILIZED, THE MATERIAL WILL BE MOVED TO THE TEMPORARY STORAGE AREA FOR INTERIM STORAGE.
- IF THE TCLP RESULTS INDICATE THE MATERIAL NEEDS TO BE SOLIDIFIED/STABILIZED THE MATERIAL WILL EITHER BE STORED SEPARATELY PRIOR TO SOLIDIFICATION OR SOLIDIFIED AND STORED.

NOTE: BINS WILL BE COVERED WITH A TARP WHEN MATERIAL IS STORED WHILE AWAITING RESULTS OF TCLP ANALYSIS

ERM-New England, Inc. 205 Portland Street • Boston, Massachusetts 02114 • (617) 742-8228

Project NEW BEDFORD HARBOR HOT SPOT REMEDIATION W.O. No. 208-01-03 Sheet 3 of 5
Subject TEMPORARY ASH STORAGE FACILITY By JDF Date 5/17/91
Chkd. by Date

TEMPORARY FLY ASH STORAGE

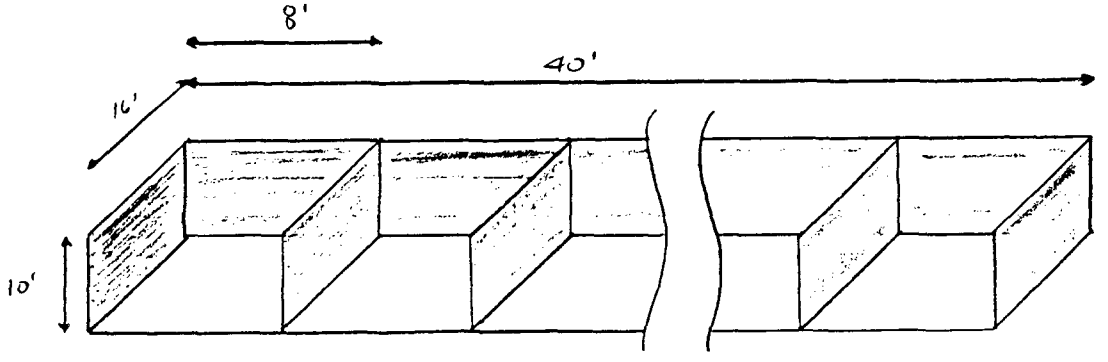

NOT TO SCALE

EACH DAY STORAGE BIN CAN HOLD A MAXIMUM OF

10' x 16' x 8' = 1,280 CF = 47.4 CY

ASSUME ONLY 75% EFFECTIVE USAGE

(.75)(47.4 CY) = 35.6 CY

SAY 35 CY EACH BIN

CONSTRUCTION OF TEMPORARY FLY ASH STORAGE BINS

BOTTOM CONCRETE SLAB

THICKNESS 6"
REINFORCED CONCRETE
FOOTER 5' DEEP 6" WIDE
VOLUME OF CONCRETE
SLAB
40' x 16' x 6" = 320 CF = 11.9 CY
FOOTER
[(40' x 2) + (16' x 2)] x 6" x 5' = 280 CF = 10.4 CY
TOTAL = 22.3 CY
SAY = 23 CY

ERM-New England, Inc. 205 Portland Street • Boston, Massachusetts 02114 • (617) 742-8228

Project NEW BEDFORD HOT SPOT REMEDIATION W.O. No. 208-01-08 Sheet 4 of 5
Subject TEMPORARY ASH STORAGE FACILITY By JOF Date 5/11/91
Chkd. by _____ Date _____

SIDE WALLS

THICKNESS 6"

REINFORCED CONCRETE

SIDEWALLS 6 (OF WHICH ONE IS SHARED BY BOTTOM ASH STORAGE BLDG. AND ONE IS SHARED BY TEMPORARY ASH STORAGE BLDG.

4 TOTAL FOR ESTIMATING

BACKWALLS 5

VOLUME OF CONCRETE

SIDEWALLS

$4(10' \times 16' \times 6") = 320\ CF = 11.9\ CY$

BACKWALLS

$5(10' \times 8' \times 6") = 200\ CF = 7.4\ CY$

TOTAL = 19.3 CY

SAY 20 CY

OPERATION WILL BE SIMILIAR TO BOTTOM ASH MATERIAL EXCEPT THAT IT WOULD BE EXPECTED THAT FLY ASH WILL NEED TO BE STABILIZED.

ERM-New England, Inc. 205 Portland Street • Boston, Massachusetts 02114 • (617) 742-8228

Project NEW BEDFORD HARBOR HOT SPOT REMEDIATION W.O. No. 208-01-03 Sheet 5 of 5
Subject TEMPORARY ASH STORAGE FACILITY By JDF Date 5/17/91
Chkd. by Date

TEMPORARY ASH STORAGE BUILDING

LENGTH = 160'
WIDTH = 90'
HEIGHT = 20'

CONCRETE SLAB

ASSUME THICKNESS OF 1 FT WITH 5 FT FOOTER

SLAB

160' X 90' X 6" = 7,200 CF = 267 CY

FOOTER

[(160' X 2) + (90' X 2)] X 6" X 5' = 1,250 CF = 46.3 CY

TOTAL = 313.3 CY
SAY 325 CY

BUILDING.

VOLUME = 160' X 90' X 20' = 288,000 CF

FOOTPRINT = 160' X 90' = 14,400 SF

NOTE:

THICKNESS OF CONCRETE SLABS HAS BEEN ASSUMED AT 6" FOR ALL COMPONENTS. HOWEVER, THE STRUCTURAL REQUIREMENTS OF THE SLABS WILL NEED TO BE INVESTIGATED TO ENSURE THAT THE SLABS CAN CARRY THE EXPECTED DEAD LOADS (ASH MATERIAL) AND LIVE LOADS (TRUCKS, FRONT END LOADERS) USE IN THE REMEDIATION.

95/

Material Balance

WATER TREATMENT	1	2	3	4	5	6	7	8A	8B	8C	9	10	11	12	13
MASS BALANCE													MICRO	UV/	
	DREDGING	EQUALIZATIO	EQUALIZATIO	ALUM	POLYMER	FLOCCULATOR	CLARIFIER	PEROXIDE	PEROXIDE	POLYMER	COMPRESSED	FILTER	FILTER	OXIDATION	FILTER
	FLOW	INFLUENT	EFFLUENT	FEED	FEED	EFFLUENT	EFFLUENT	FEED	FEED	FEED	AIR	EFFLUENT	EFFLUENT	EFFLUENT	REJECTS
DESIGN AVG. FLOW (GPM)	2,100	2,100	350	1.4*	21*	368	368	2*	2*	10	4**	350	350	350	18
TSS CONCENTRATION (PPM)	50,000	600	600			2,695	100					5	3	3	1,949
MASS FLOW-WATER (LB/DAY)	3,988,404	3,988,404	3,988,404	375	4,200	4,418,712	4,418,712	442	442	4,200		4,197,776	4,197,776	4,197,776	215,914
MASS FLOW-TSS (LB/DAY)	209,916	2,393	2,393	-	-	11,910	442	-	-	-	-	21	10	10	421
PCB (PPB)	3,857,000	49,000	49,000	-	-	51,294	2,800	-	-	-	-	533	320	<1.5	46,940
HEAVY METALS (µG/L)	141,000	4,874	4,874	-	-	4,880	114	-	-	-	-	114	114	114	114
IRON (PPM)	-	41	41	-	-	47	12	-	-	-	-	6	2	2	129
PAH (PPB)	23	3	3	-	-	3	1	-	-	-	-	1	1	<1	1
	4,198,320														
						(*) GPH									
						(**) SCFM									
SOLIDS TREATMENT	S1	S1A	S2	S2A	S3	S4	S4A	S4B	S5		S6	S7			
MASS BALANCE	SEDIMENT														
	TRANSFER	STORAGE	DEWATERING	FILTRATE	DEWATER	INCINERATOR	FLUE	EXIT	FLY		BOTTOM	ASH TO			
	FLOW	DRAIN	INFLUENT	RETURN	EFFLUENT	FEED	GAS	GAS	ASH		ASH	DISPOSAL			
TOTAL WASTE FLOW (LB/HR)	77,778	2,357	23,569	9,569	14,000	14,000	63,985	108,192	1,370		6,520	7,872			
WASTE FLOW-SOLIDS (LB/HR)	21,919	236	7,071	71	7,000	7,000	686	1	685		6,313	6,998			
WASTE FLOW-WATER (LB/HR)	55,859	2,121	16,498	9,498	7,000	7,000	51,544	57,650	685		189	874			
FUEL (LB/HR NATURAL GAS)	-	-	-	-	-	2,543	-	-	-		-	-			
COMBUSTION AIR	-	-	-	-	-	54,302	-	-	-		-	-			
QUENCH WATER	-	-	-	-	-	44,961	-	-	-		-	-			
PCB (PPM)	21,723	7,708	23,125	570	38,541	38,541	-	-	-		<5	<5			
HEAVY METALS (µG/L)	777,427	275,861	827,583	20,384	1,379,305	1,379,305	-	-	2,114,264		2,524,262	2,452,911			

ERM-New England, Inc. 205 Portland Street • Boston, Massachusetts 02114 • (617) 742-8228

Project: NEW BEDFORD HOT SPOTS W.O. No. 208-01-09 Sheet 1 of 8

Subject: PROCESS FLOW DIAGRAM ASSUMPTIONS By: B. BREED Date: 11/12/91

Chkd. by: JTDF Date: 11/22/91

STREAM 1 DREDGING FLOW

- TYPICAL DREDGE FLOWS - 2100 GPM
- INFLUENT SOLIDS - 5%
- PCBs - PREDICTED VALUE BASED ON AVERAGE HOT SPOTS CONCENTRATION OF 23,142 PPM IN 30% SOLIDS DILUTED TO 5% SOLIDS IN THE DREDGING INFLUENT.
- METALS CONCENTRATION FROM TREATABILITY STUDY

  Cd = 3080 PPB
  Cr = 7340
  Cu = 68600
  Pb = 38100
  Ni = 6270
  Zn = 17600
  140,990 PPB
- PAH CONCENTRATION BASED ON TREATABILITY DATA.

STREAM 2 EQUALIZATION INFLUENT

- ALL CONTAMINANT & SOLIDS CONCENTRATIONS FROM TREATABILITY DATA

STREAM 3 EQUALIZATION EFFLUENT

WATER FLOW RATE =

2100 GPM × 60 MIN/HR × 4 HRS ÷ 24 HRS
= 350 GPM

ALL OTHER STREAM CONCENTRATIONS FROM TREATABILITY DATA

STREAM 4 ALUM FEED

ALUM DOSE BASED ON FEEDING STANDARD ALUM SOLUTION TO DOSE WASTEWATER (350 GPM) AT 25 PPM ($Al_2(SO_4)_3$)

97B/

ERM-New England, Inc. 205 Portland Street • Boston, Massachusetts 02114 • (617) 742-8228

Project NEW BEDFORD HOT SPOTS W.O. No. 208-01-09 Sheet 2 of 8
Subject PFD ASSUMPTIONS By B.BREED Date 11/26/91
Chkd. by JDF Date 11/22/91

STREAM 5 POLYMER FEED	FEED RATE POLYMER BASED ON HIGHEST CONCENTRATION OF POLYMER DOSED DURING TREATABILITY STUDY OF 100 PPM RATE INCLUDES WATER FOR SOLUTION
STREAM 6 FLOCCULATOR EFFLUENT	FLOW RATES REPRESENT STREAM 3 CONCENTRATIONS PLUS ADDED CONCENTRATIONS FROM STREAMS 3 + 4 + 5.
STREAM 7 CLARIFIER EFFLUENT	CONCENTRATIONS FROM TREATABILITY STUDY
STREAM 8A & 8B PEROXIDE FEEDS	FLOW RATE BASED ON TREATABILITY STUDY (PSI) DATA. FLOW RATE OF 50% H_2O_2 AT DOSE OF 50PPM. PEROXIDE TO REMOVE IRON & FOR USE IN UV/OXIDATION PROCESS.
STREAM 8C POLYMER FEED	BASED ON CONCENTRATION OF POLYMER AS MAY BE REQUIRED TO ASSIST FILTRATION.
STREAM 9 COMPRESSED AIR	FLOW RATE OF AIR REQUIRED BY MANUFACTURER TO BACKWASH FILTER

97C/

ERM-New England, Inc. 205 Portland Street • Boston, Massachusetts 02114 • (617) 742-8228

Project NEW BEDFORD HOT SPOTS W.O. No. 208-01-09 Sheet 3 of 8

Subject PFD ASSUMPTIONS By B. BREED Date 11/26/91

Chkd. by JDF Date 11/22/91

STREAM 10 & 11
FILTER EFFLUENT AND MICROFILTER EFFLUENT

CONCENTRATIONS OF METALS AND PCB AS INDICATED BY TREATABILITY DATA. CONCENTRATION OF IRON AS INDICATED BY PEROXIDATION SYSTEM TREATABILITY WORK.

STREAM 12
UV/OXIDATION EFFLUENT

CONCENTRATIONS AS PREDICTED BY PEROXIDATION SYSTEMS TREATABILITY WORK.

STREAM 13
FILTER REJECTS

FLOW RATE FROM FILTER MANUFACTURER INFORMATION.

SOLIDS & PCB CONCENTRATIONS BASED ON REMOVAL THROUGH FILTER

= STREAM 7 − STREAM 10

ASSUME ALL METALS IN DISSOLVED PHASE. NO REMOVAL OF METALS IN FILTER

97D/

ERM-New England, Inc. 205 Portland Street • Boston, Massachusetts 02114 • (617) 742-8228

Project NEW BEDFORD HOT SPOTS W.O. No. 208-01-09 Sheet 4 of 8
Subject PFD ASSUMPTIONS By B.BEED Date 11/26/91
Chkd. by JDF Date 11/30/91

STREAM S1 SEDIMENT TRANSFER FLOW	FLOW RATE AS REQUIRED TO ALLOW AN INCINERATOR FEED OF 7 TONS/HR. FLOW OF SOLIDS BASED ON SOLIDS CONC. OF 28% W/W FLOW BASED ON 8 HR/DY OPERATION
STREAM S1A STORAGE DRAIN	FLOW OF DECANT OF 10% SOLIDS TO CDF CELL #2. FLOW REPRESENTS 10% OF TOTAL REQUIRED FLOW FOR STREAM S2. CONCENTRATION OF PCBs TIED TO SOLIDS CONC. FLOW BASED ON 24 HR/DY OPERATION
STREAM S2 DEWATERING INFLUENT	FLOW RATE BASED ON MASS BALANCE AROUND 30% SOLIDS STORAGE CONCENTRATION OF METALS & PCBs ALSO BASED ON MASS BALANCE AROUND 30% SOLIDS STORAGE. FLOWS BASED ON 24 HR/DY OPERATION.
STREAM S2A FILTRATE RETURN	WATER FLOW RATE REPRESENTS MASS OF WATER REQUIRING REMOVAL TO ENSURE A 50% SOLIDS CAKE FEED TO THE INCINERATOR. FLOW OF SOLIDS REPRESENTS 0.7% SOLIDS. (TYPICAL FILTRATE FROM FILTER PRESS DEWATERING). PCB CONCENTRATIONS
STREAM S3 DEWATERING EFFLUENT	DEWATERING EFFLUENT SOLIDS & WATER FLOWS BASED ON MASS BALANCE AROUND SOLIDS DEWATERING. (50% SOLIDS FEED). CONCENTRATIONS OF PCBs & METALS BASED ON MASS BALANCE AROUND DEWATERING
STREAM S4 INCINERATOR FEED	INCINERATOR FEED SOLIDS, WATER, PCB, AND METALS CONCENTRATIONS EQUAL TO INFLUENT TO 50% SOLIDS DEWATERING. FLOW OF FUEL, COMBUSTION AIR, AND QUENCH WATER ARE VALUES FROM COMPUTER MODEL

ERM-New England, Inc. 205 Portland Street • Boston, Massachusetts 02114 • (617) 742-8228

Project NEW BEDFORD HOT SPOTS W.O. No. 208-01-09 Sheet 5 of 8
Subject PFD ASSUMPTIONS By B. REED Date 11/26/91
Chkd. by JDF Date 11/30/91

STREAM S4 (CONT.)
INCINERATOR FEED

QUENCH WATER REPRESENTS THE TOTAL ANTICIPATED QUENCH WATER REQUIRED TO REMOVE ASH FROM FLUE GAS
FUEL VALUE REPRESENTS TOTAL AMOUNT OF FUEL REQUIRED TO RUN BOTH THE KILN AND THE SECONDARY COMBUSTION CHAMBER. COMBUSTION AIR IS THE TOTAL MASS OF AIR REQUIRED TO MAINTAIN EXCESS OXYGEN IN THE KILN AND SECONDARY COMBUSTION CHAMBER.

STREAM S4A
FLUE GAS

FLUE GAS SOLIDS FLOW RATE IS BASED ON THE PREDICTED ASH FLOW ON THE COMPUTER MODEL (INCLUDED IN THIS APPENDIX). WATER FLOW REPRESENTS THE TOTAL WATER IN THE ENTERING SOLIDS, THE QUENCH WATER AND THE WATER CREATED FROM THE COMBUSTION PROCESS MINUS THE WATER THAT LEAVES IN THE ASH STREAMS (S5 & S6). NO METALS CONCENTRATIONS & PCB CONCENTRATIONS ARE NOT SHOWN BECAUSE IT IS UNKNOWN AT THIS TIME (DUE TO THE INCINERATOR CONFIGURATION BEING UNKNOWN) HOW THE METALS + PCBs WILL PARTITION.

STREAM S4B
EXIT GAS

THE EXIT GAS VALUES FOR SOLIDS & WASTE FLOW SOLIDS WERE GENERATED FROM THE INCINERATOR COMPUTER RUN. TOTAL WASTE FLOW CONSISTS OF ALL COMBUSTION

ERM-New England, Inc. 205 Portland Street • Boston, Massachusetts 02114 • (617) 742-8228

Project NEW BEDFORD HOT SPOTS W.O. No. 208-01-09 Sheet 6 of 8
Subject PFD ASSUMPTIONS By B. BREED Date 11/26/91
Chkd. by JDF Date 11/30/91

STREAM SUB (CONT.)

AIR, PRODUCTS OF COMBUSTION WATER AND SOLIDS LEAVING THE STACK. FOR THE PURPOSE OF THIS MASS BALANCE IT WAS ASSUMED THAT THE INCINERATOR WILL EVAPORATE MOST OF THE WATER FROM THE FLY ASH AND THAT THE FLY ASH WILL LEAVE THE INCINERATOR AT 50% SOLIDS. THE VALUE FOR THE MASS OF WATER LEAVING THE INCINERATOR AS BLOWDOWN ON THE COMPUTER RUN HAS BEEN SHOWN AS LEAVING THE INCINERATOR IN THE EXIT GAS.
THE CONCENTRATION OF PCBS & METALS LEAVING THE STACK WILL BE BASED ON ACHIEVING A DRE OF 6-9S, STACK HEIGHT, AND AIR MODELLING. SINCE THE ULTIMATE CONFIGURATION OF THE INCINERATOR IS UNKNOWN, SHOWING THESE NUMBERS ON THE MASS BALANCE WOULD BE MISLEADING AND COULD LEAD TO THE CONTRACTOR MISINTERPRETING THE REQUIREMENTS OF THE CONTRACT. THUS THESE VALUES ARE NOT SHOWN.

STREAM S5
FLY ASH

THE VALUES FOR THE SOLIDS IN THE FLY ASH WERE BASED ON VALUES FROM THE COMPUTER MODEL. IT WAS ASSUMED FOR THE PURPOSE OF THIS MASS BALANCE THAT THE FLY ASH WILL

ERM-New England, Inc. 205 Portland Street • Boston, Massachusetts 02114 • (617) 742-8228

Project NEW BEDFORD HOT SPOTS W.O. No. 202-01-09 Sheet 7 of 9
Subject MBD ASSUMPTIONS By B. BEEED Date 11/26/91
Chkd. by JDF Date 11/30/91

STREAM S5 (CONT.)

LEAVE THE INCINERATOR AT 50% SOLIDS CONCENTRATION. THE PCB CONCENTRATIONS WERE ASSUMED TO BE 0. THE FINAL ASH CONCENTRATION IS REQUIRED TO BE LESS THAN 5 PPM. SINCE THE FLY ASH IS ALSO PASSED THROUGH THE SECONDARY COMBUSTION CHAMBER IT WAS ASSUMED THAT THE PCB CONCENTRATION IN THE FLY ASH WILL BE SIGNIFIGANTLY LOWER THAT THE CONCENTRATION IN THE BOTTOM ASH. A VALUE OF 0PPM WAS CHOSEN. THE VALUE FOR THE METALS CONCENTRATION IN THE FLY ASH ASSUMES THAT APPROXIMATELY 15% OF THE METALS ARE CARRIED WITH THE FLY ASH.

STREAM S6
BOTTOM ASH

THE BOTTOM ASH SOLIDS VALUE IS BASED ON THE RESULTS OF THE COMPUTER MODEL. FOR THE PURPOSE OF THE MASS BALANCE IT WAS ASSUMED THE BOTTOM ASH WILL HAVE A WATER CONTENT OF APPROXIMATELY 2.9%. METALS CONCENTRATIONS WERE CALCULATED ASSUMING 85% OF THE METALS ARE CARRIED IN THE BOTTOM ASH. PCB CONCENTRATIONS ARE BASED ON SPECIFICATION REQUIREMENTS OF LESS THAN 5 PPM.

ERM-New England, Inc. 205 Portland Street • Boston, Massachusetts 02114 • (617) 742-8228

Project NEW BEDFORD HOT SPOTS W.O. No. 2UY-01-09 Sheet 8 of 8
Subject PFD ASSUMPTIONS By B. BREED Date 11/26/91
Chkd. by JDF Date 11/30/91

STREAM S7
ASH TO DISPOSAL

VALUES FOR MASS & CONCENTRATIONS OF SOLIDS, WATER, PCBS, AND METALS WERE DERIVED FROM THE ADDITION OF STREAM S5 TO S6.
THE TOTAL MASS OF SOLIDS IN THE ASH TO DISPOSAL WAS CALCULATED AS FOLLOWS:

7000 lb/HR → 1 lb/HR + 1 lb/HR + 6998 lb/HR

S4 — S4B (SOLIDS) — S4B (GASEOUS PRODUCTS OF COMBUSTION) — S7

The ERM Group® Environmental Resources Management, Inc. • Exton, Pennsylvania 19341 • (215) 524-3500

Project New Bedford Harbor W.O. No. _____ Sheet ____ of ____
Subject Table of Contents for Calculations By _____ Date _____
CAP DESIGN Chkd by _____ Date _____

Table of Contents

HELP Model Summary — 1 page

1. HELP Model Runs for:
   - (a) Proposed cap — 5 pages
   - (b) Typical Solid Waste Cap — 5 pages

2. Solids Storage Facilities Calculations — 3 pages

3. CDF Storage Volume and Earthwork Calculations — 5 pages

4. Stormwater Calculations and Pipe Design — 6 pages

5. Volume of Rainwater to be collected and treated — 1 page

6. Drainage Channel Design — 3 pages

7. ~~Lower drain~~ Anchor Trench Drain Design — 2 pages

8. Cap Stability Calculations — 5 pages

Summary of HELP Model Results

The leachate production rates for the New Bedford Harbor Disposal Facility cap designs were generated using the HELP computer model. A summary of the results are as follows:

Two caps were examined consisting of the following layers:

Proposed Cap (3 feet thick):

-6 inch top soil

-18 inch cover soil

-filter fabric

-drainage net

-60 mil HDPE geomembrane

-12 inch select fill

Massachusetts DEP Solid Waste Cap (4 feet thick):

-12 inch top soil

-6 inch cover soil

-18 inch clay

-12 inch select fill

From the annual average rainfall of approximately 41 inches, 9.4 inches runoff the solid waste cap, 28.9 inches will evapotranspirate, 1.2 inches drain laterally across the barrier layer while approximately 1.6 inches penetrate the cap.

The proposed cap however, allows more runoff and lateral drainage across the liner system (5 inches and 9.4 inches, respectively) and has less than 0.01 inches actually penetrate the liner. <u>Thus, the proposed cap is more effective than the solid waste cap in minimizing leachate production.</u>

****
****

NEW BEDFORD PROPOSED CAP
NEW BEDFORD, MA
JLT 12-JUN-91

****
****

GOOD GRASS

LAYER 1

VERTICAL PERCOLATION LAYER

THICKNESS	=	6.00 INCHES
POROSITY	=	0.4630 VOL/VOL
FIELD CAPACITY	=	0.2320 VOL/VOL
WILTING POINT	=	0.1157 VOL/VOL
INITIAL SOIL WATER CONTENT	=	0.2320 VOL/VOL
SATURATED HYDRAULIC CONDUCTIVITY	=	0.001553999959 CM/SEC

LAYER 2

VERTICAL PERCOLATION LAYER

THICKNESS	=	18.00 INCHES
POROSITY	=	0.4057 VOL/VOL
FIELD CAPACITY	=	0.3089 VOL/VOL
WILTING POINT	=	0.2099 VOL/VOL
INITIAL SOIL WATER CONTENT	=	0.3089 VOL/VOL
SATURATED HYDRAULIC CONDUCTIVITY	=	0.000002100000 CM/SEC

LAYER 3

LATERAL DRAINAGE LAYER

THICKNESS	=	0.25 INCHES
POROSITY	=	0.8000 VOL/VOL
FIELD CAPACITY	=	0.0400 VOL/VOL
WILTING POINT	=	0.0200 VOL/VOL
INITIAL SOIL WATER CONTENT	=	0.0400 VOL/VOL
SATURATED HYDRAULIC CONDUCTIVITY	=	20.000000000000 CM/SEC
SLOPE	=	3.00 PERCENT
DRAINAGE LENGTH	=	182.0 FEET

LAYER 4

BARRIER SOIL LINER WITH FLEXIBLE MEMBRANE LINER

THICKNESS	=	12.00 INCHES
POROSITY	=	0.4057 VOL/VOL
FIELD CAPACITY	=	0.3089 VOL/VOL
WILTING POINT	=	0.2099 VOL/VOL
INITIAL SOIL WATER CONTENT	=	0.4057 VOL/VOL
SATURATED HYDRAULIC CONDUCTIVITY	=	0.000002100000 CM/SEC
LINER LEAKAGE FRACTION	=	0.00060000

GENERAL SIMULATION DATA

SCS RUNOFF CURVE NUMBER	=	72.00
TOTAL AREA OF COVER	=	113231. SQ FT
EVAPORATIVE ZONE DEPTH	=	28.00 INCHES
UPPER LIMIT VEG. STORAGE	=	10.2806 INCHES
INITIAL VEG. STORAGE	=	8.6262 INCHES
INITIAL SNOW WATER CONTENT	=	0.0000 INCHES
INITIAL TOTAL WATER STORAGE IN SOIL AND WASTE LAYERS	=	11.8306 INCHES

SOIL WATER CONTENT INITIALIZED BY PROGRAM.

CLIMATOLOGICAL DATA

DEFAULT RAINFALL WITH SYNTHETIC DAILY TEMPERATURES AND SOLAR RADIATION FOR BOSTON MASSECHUSSESTS

MAXIMUM LEAF AREA INDEX	=	3.30
START OF GROWING SEASON (JULIAN DATE)	=	127
END OF GROWING SEASON (JULIAN DATE)	=	290

NORMAL MEAN MONTHLY TEMPERATURES, DEGREES FAHRENHEIT

JAN/JUL	FEB/AUG	MAR/SEP	APR/OCT	MAY/NOV	JUN/DEC
29.60	30.70	38.40	48.70	58.50	68.00
73.50	71.90	64.60	54.80	45.20	33.30

The ERM Group

****

AVERAGE MONTHLY VALUES IN INCHES FOR YEARS 74 THROUGH 78

	JAN/JUL	FEB/AUG	MAR/SEP	APR/OCT	MAY/NOV	JUN/DEC
PRECIPITATION						
TOTALS	5.35	2.84	3.30	2.85	2.93	1.80
	2.37	4.89	3.89	3.89	2.35	4.48
STD. DEVIATIONS	1.82	0.47	1.09	1.09	1.12	0.77
	1.15	2.01	2.47	0.72	1.68	1.17
RUNOFF						
TOTALS	1.920	0.840	0.147	0.006	0.163	0.000
	0.000	0.441	0.189	0.244	0.240	0.790
STD. DEVIATIONS	1.889	1.044	0.231	0.013	0.267	0.000
	0.000	0.747	0.394	0.236	0.538	1.097
EVAPOTRANSPIRATION						
TOTALS	0.775	1.252	2.265	2.773	2.789	3.649
	1.987	3.644	2.971	2.152	1.510	0.757
STD. DEVIATIONS	0.149	0.189	0.224	0.471	0.452	1.095
	0.393	1.530	1.289	0.161	0.044	0.190
LATERAL DRAINAGE FROM LAYER 3						
TOTALS	2.1079	1.8534	1.4714	0.9765	0.4152	0.0770
	0.0000	0.0000	0.0000	0.3605	0.8948	1.1502
STD. DEVIATIONS	0.2353	0.3644	0.6574	0.7791	0.5382	0.1128
	0.0000	0.0000	0.0000	0.5620	0.9252	1.0498
PERCOLATION FROM LAYER 4						
TOTALS	0.0013	0.0012	0.0013	0.0012	0.0012	0.0004
	0.0000	0.0000	0.0000	0.0002	0.0007	0.0008
STD. DEVIATIONS	0.0000	0.0000	0.0000	0.0000	0.0000	0.0002
	0.0000	0.0000	0.0000	0.0004	0.0007	0.0007

****

****

AVERAGE ANNUAL TOTALS & (STD. DEVIATIONS) FOR YEARS 74 THROUGH 78

	(INCHES)		(CU. FT.)	PERCENT
PRECIPITATION	40.93	(3.969)	386231.	100.00
RUNOFF	4.981	(2.670)	47001.	12.17
EVAPOTRANSPIRATION	26.524	(1.254)	250281.	64.80
LATERAL DRAINAGE FROM LAYER 3	9.3069	(3.4081)	87819.	22.7[illegible]
PERCOLATION FROM LAYER 4	0.0082	(0.0016)	77.	0.02
CHANGE IN WATER STORAGE	0.111	(0.681)	1052.	0.27

****

****

PEAK DAILY VALUES FOR YEARS 74 THROUGH 78

	(INCHES)	(CU. FT.)
PRECIPITATION	2.64	24910.8
RUNOFF	2.060	19438.1
LATERAL DRAINAGE FROM LAYER 3	0.0720	679.1
PERCOLATION FROM LAYER 4	0.0000	0.4
HEAD ON LAYER 4	0.1	
SNOW WATER	4.10	38642.2

MAXIMUM VEG. SOIL WATER (VOL/VOL) 0.4013

MINIMUM VEG. SOIL WATER (VOL/VOL) 0.1846

****

****

FINAL WATER STORAGE AT END OF YEAR 78

LAYER	(INCHES)	(VOL/VOL)
1	2.17	0.3609
2	6.94	0.3855
3	0.07	0.2945
4	4.87	0.4057
SNOW WATER	0.00	

****
****

****
****

NEW BEDFORD SOLID WASTE CAP
NEW BEDFORD, MA
JLT 12-JUN-91

****
****

GOOD GRASS

LAYER 1

VERTICAL PERCOLATION LAYER

THICKNESS	=	12.00 INCHES
POROSITY	=	0.4630 VOL/VOL
FIELD CAPACITY	=	0.2320 VOL/VOL
WILTING POINT	=	0.1157 VOL/VOL
INITIAL SOIL WATER CONTENT	=	0.2320 VOL/VOL
SATURATED HYDRAULIC CONDUCTIVITY	=	0.001553999959 CM/SEC

LAYER 2

LATERAL DRAINAGE LAYER

THICKNESS	=	6.00 INCHES
POROSITY	=	0.3339 VOL/VOL
FIELD CAPACITY	=	0.0529 VOL/VOL
WILTING POINT	=	0.0245 VOL/VOL
INITIAL SOIL WATER CONTENT	=	0.0529 VOL/VOL
SATURATED HYDRAULIC CONDUCTIVITY	=	0.000289999996 CM/SEC
SLOPE	=	3.00 PERCENT
DRAINAGE LENGTH	=	182.0 FEET

LAYER 3

BARRIER SOIL LINER

THICKNESS	=	18.00 INCHES
POROSITY	=	0.4300 VOL/VOL
FIELD CAPACITY	=	0.3663 VOL/VOL
WILTING POINT	=	0.2802 VOL/VOL
INITIAL SOIL WATER CONTENT	=	0.4300 VOL/VOL
SATURATED HYDRAULIC CONDUCTIVITY	=	0.000000100000 CM/SEC

LAYER 4

VERTICAL PERCOLATION LAYER

THICKNESS	=	12.00 INCHES
POROSITY	=	0.4057 VOL/VOL
FIELD CAPACITY	=	0.3089 VOL/VOL
WILTING POINT	=	0.2099 VOL/VOL
INITIAL SOIL WATER CONTENT	=	0.3089 VOL/VOL
SATURATED HYDRAULIC CONDUCTIVITY	=	0.000002100000 CM/SEC

GENERAL SIMULATION DATA

SCS RUNOFF CURVE NUMBER	=	72.00
TOTAL AREA OF COVER	=	113231. SQ FT
EVAPORATIVE ZONE DEPTH	=	28.00 INCHES
UPPER LIMIT VEG. STORAGE	=	7.5594 INCHES
INITIAL VEG. STORAGE	=	7.1686 INCHES
INITIAL SNOW WATER CONTENT	=	0.0000 INCHES
INITIAL TOTAL WATER STORAGE IN SOIL AND WASTE LAYERS	=	14.5482 INCHES

SOIL WATER CONTENT INITIALIZED BY PROGRAM.

CLIMATOLOGICAL DATA

DEFAULT RAINFALL WITH SYNTHETIC DAILY TEMPERATURES AND SOLAR RADIATION FOR BOSTON MASSECHUSSETS

MAXIMUM LEAF AREA INDEX	=	3.30
START OF GROWING SEASON (JULIAN DATE)	=	127
END OF GROWING SEASON (JULIAN DATE)	=	290

NORMAL MEAN MONTHLY TEMPERATURES, DEGREES FAHRENHEIT

JAN/JUL	FEB/AUG	MAR/SEP	APR/OCT	MAY/NOV	JUN/DEC
29.60	30.70	38.40	48.70	58.50	68.00
73.50	71.90	64.60	54.80	45.20	33.30

The ERM Group

****

AVERAGE MONTHLY VALUES IN INCHES FOR YEARS 74 THROUGH 78

	JAN/JUL	FEB/AUG	MAR/SEP	APR/OCT	MAY/NOV	JUN/DEC
PRECIPITATION						
TOTALS	5.35	2.84	3.30	2.85	2.93	1.80
	2.37	4.89	3.89	3.89	2.35	4.48
STD. DEVIATIONS	1.82	0.47	1.09	1.09	1.12	0.77
	1.15	2.01	2.47	0.72	1.68	1.17
RUNOFF						
TOTALS	3.397	1.804	0.945	0.516	0.245	0.000
	0.000	0.037	0.000	0.019	0.557	1.866
STD. DEVIATIONS	2.214	1.267	1.154	0.478	0.487	0.000
	0.000	0.081	0.000	0.034	1.245	2.092
EVAPOTRANSPIRATION						
TOTALS	0.780	1.263	2.288	2.933	2.985	4.977
	2.326	3.833	3.030	2.152	1.554	0.768
STD. DEVIATIONS	0.152	0.187	0.225	0.498	0.561	0.824
	0.218	1.756	1.371	0.209	0.091	0.180
LATERAL DRAINAGE FROM LAYER 2						
TOTALS	0.2328	0.2069	0.2003	0.1421	0.1044	0.0377
	0.0003	0.0066	0.0064	0.0524	0.0964	0.1503
STD. DEVIATIONS	0.0284	0.0134	0.0391	0.0367	0.0188	0.0152
	0.0004	0.0126	0.0077	0.0435	0.0875	0.1152
PERCOLATION FROM LAYER 3						
TOTALS	0.2053	0.1865	0.1987	0.1798	0.1753	0.1376
	0.0040	0.0313	0.0512	0.1225	0.1358	0.1732
STD. DEVIATIONS	0.0088	0.0042	0.0092	0.0089	0.0047	0.0198
	0.0055	0.0480	0.0539	0.0716	0.0797	0.0461
PERCOLATION FROM LAYER 4						
TOTALS	0.1768	0.1766	0.1984	0.1885	0.1846	0.1670
	0.1170	0.0769	0.0646	0.0756	0.0962	0.1259
STD. DEVIATIONS	0.0201	0.0116	0.0053	0.0062	0.0056	0.0051
	0.0093	0.0054	0.0191	0.0236	0.0336	0.0499

****

****

AVERAGE ANNUAL TOTALS & (STD. DEVIATIONS) FOR YEARS 74 THROUGH 78

	(INCHES)		(CU. FT.)	PERCENT
PRECIPITATION	40.93	(3.969)	386231.	100.00
RUNOFF	9.387	(3.427)	88575.	22.93
EVAPOTRANSPIRATION	28.888	(1.398)	272588.	70.58
LATERAL DRAINAGE FROM LAYER 2	1.2366	(0.2796)	11668.	3.02
PERCOLATION FROM LAYER 3	1.6012	(0.1968)	15109.	3.91
PERCOLATION FROM LAYER 4	1.6481	(0.1073)	15551.	4.03
CHANGE IN WATER STORAGE	-0.228	(1.347)	-2151.	-0.56

****

****

PEAK DAILY VALUES FOR YEARS 74 THROUGH 78

	(INCHES)	(CU. FT.)
PRECIPITATION	2.64	24910.8
RUNOFF	2.132	20119.6
LATERAL DRAINAGE FROM LAYER 2	0.0082	77.6
PERCOLATION FROM LAYER 3	0.0069	65.0
HEAD ON LAYER 3	18.7	
PERCOLATION FROM LAYER 4	0.0066	62.5
SNOW WATER	4.10	38642.2

MAXIMUM VEG. SOIL WATER (VOL/VOL) 0.4200

MINIMUM VEG. SOIL WATER (VOL/VOL) 0.0852

****

****

FINAL WATER STORAGE AT END OF YEAR 78

LAYER	(INCHES)	(VOL/VOL)
1	4.27	0.3556
2	2.00	0.3339
3	7.74	0.4300
4	4.08	0.3403
SNOW WATER	0.00	

****
****

ERM Group Environmental Resources Management, inc. • Exton, Pennsylvania 19341 • (215) 524-3500

Project NEW BEDFORD HARBOR W.O. No. F00-59 Sheet 1 of 3
Subject SOLIDS STORAGE FACILITIES By SCS Date 4-25-91
Chkd by SPS Date 5-20-91

PURPOSE: ESTIMATE STORAGE REQUIREMENTS FOR SOLIDS / ASH HANDLING FACILITIES

BASIS: INCINERATION CALCULATIONS BY FOUR NINES (SEE ATTACHED COPY)

ASSUMPTIONS: 1) INCINERATION RATE = 7 TON/HR @ 50% SOLIDS
2) SOLIDS CONCENTRATION OF SEDIMENTS REMOVED FROM CDF = 30% BY WEIGHT
3) SPECIFIC GRAVITY OF SOLIDS = 2.2

SOLIDS FLOW DIAGRAM

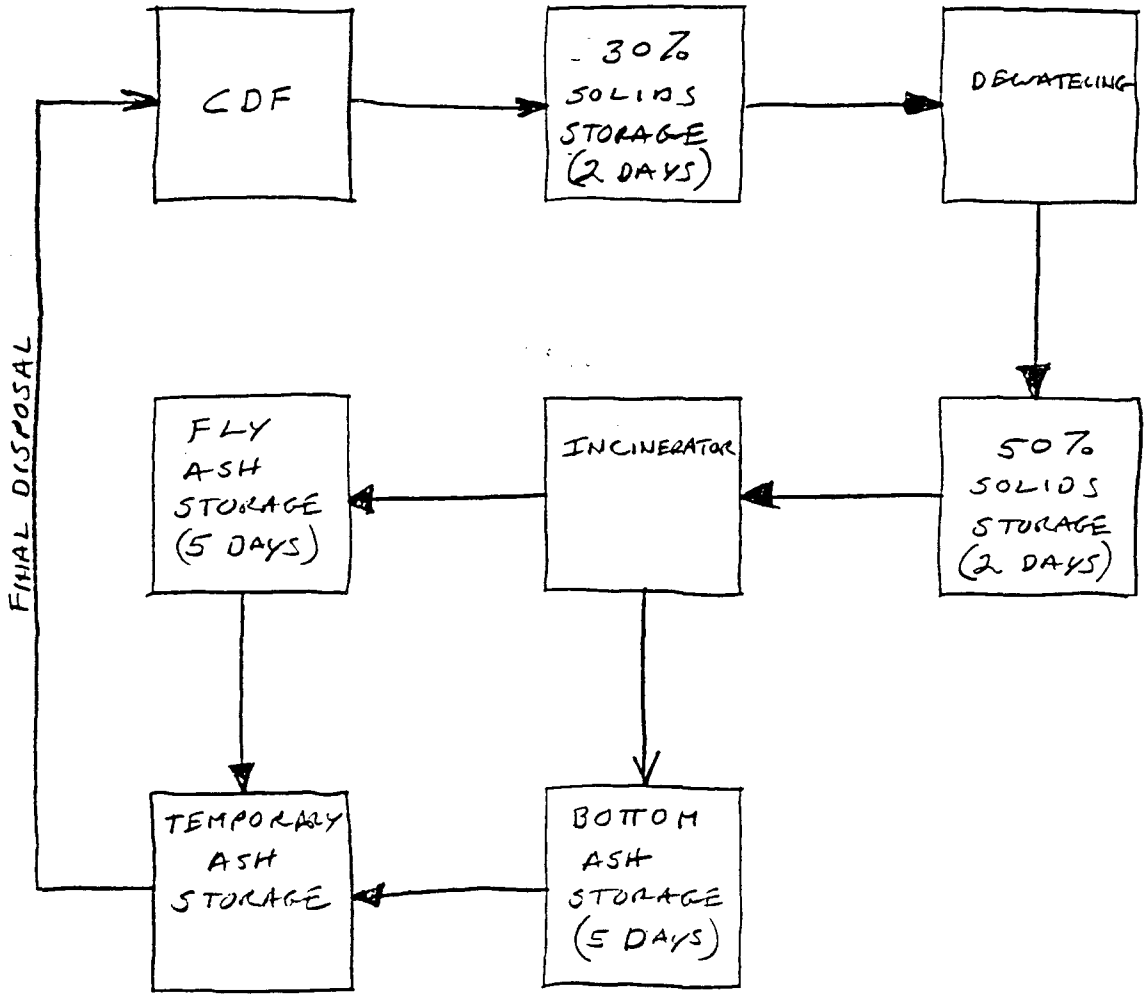

CALCULATIONS:

A) 30% STORAGE VOLUME (2 DAYS)

$$\frac{11.7 \text{ TON/HR } (24 \text{ HR/DAY}) (2000 \text{ lb/TON})}{62.4 \text{ lb/ft}^3 \ (0.3 (2.2) + 0.7 (1))}$$

$= 6,618 \text{ ft}^3/\text{DAY}$

USING 10' HIGH WALLS w/ 2 FT FREE BOARD

AREA = 6,618 $\text{ft}^3 \div 8'$ = 827 ft^2

USE 30' X 30' AREA FOR EACH DAY

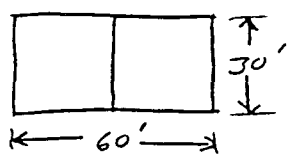

B) 50% STORAGE VOLUME (2 DAYS)

$$\frac{7 \text{ TON/HR } (24 \text{ HR/DAY}) (2000 \text{ lb/TON})}{62.4 \text{ lb/ft}^3 \ (0.5 (2.2) + 0.5 (1))}$$

$= 3365.4 \text{ ft}^3$

USING 10' SIDE WALLS w/ 2 FT. FREEBOARD

AREA = 3365.4 ÷ 8 ft = 421 ft^2

USE 20' x 22.5' AREA FOR EACH DAY

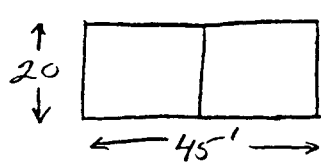

C) FLY ASH STORAGE (5 DAYS) (50% MOISTURE)

$$\frac{2\,(685\ \text{lb/HR})\,(24\ \text{HR/DAY})}{62.4\,(.5\,(2.2)+.5)} = 330\ \text{ft}^3$$

USE 5 STEEL ROLL OFF CONTAINERS $16'_L \times 84''_W \times 48''_D$ EA

VOL. = 448 ft^3 EA.

AREA REQUIRED = 16' x 40'

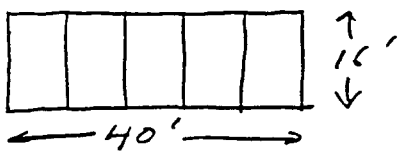

D) BOTTOM ASH (5 DAYS)

$$\frac{6174\ \text{lb/HR}\,(24\ \text{HR/DAY})}{62.4\,(2.2)} = 1080\ \text{ft}^3$$

USING 10 ft SIDE WALLS WITH 2 FT. FREEBOARD

AREA = 1080 ÷ 8 = 135 ft^2

USE 12' x 12' AREA FOR EACH DAY

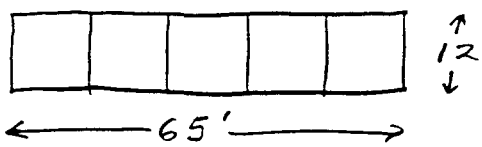

E) TEMPORARY ASH STORAGE

$$(330\ \text{ft}^3 + 1080\ \text{ft}^3)\,(90\ \text{DAY}) = 126{,}900\ \text{ft}^3$$

$$\times\ 1.1\ \text{SF}$$

$$139{,}590\ \text{ft}^3$$

USING 12 ft SIDE WALLS w/ 2 FT FREEBOARD

AREA REQUIRED = 139,590 ft^3 ÷ 10 = 13,959 ft^2

USE 120' x 120' AREA

The ERM Group® Environmental Resources Management, Inc. • Exton, Pennsylvania 19341 • (215) 524-3500

Project NEW BEDFORD HARBOR **W.O. No.** F00 59 **Sheet** 1 **of** 5
Subject CDF CELL 1 - VOL. OF ASH **By** JLT **Date** 6·4·91
Chkd by GBE **Date** 8·22·91

ASH STORAGE

VOL. REQUIRED = 139,590 FT^3 (see sht 3 of 3, solid waste facilities storage calculations attached)

BOTTOM OF CELL 1 = ELEV. 5.5 (1' cover over 4.5' bottom)

@ ELEV 6.5: Vol. = $lwh + 1/2bhl + 1/2bhl$

$= (75{,}135\ FT^2)(6.5-5.5) + 1/2(3)(1)(234) + 1/2(3)(1)(238)$

$= 75{,}843\ FT^3$

@ ELEV 7.5: Vol = $(7.5-5.5)(75{,}843\ FT^2) = 151{,}686\ FT^2$

@ ELEV 7.35: Vol = $(7.35-5.5)(75{,}843\ FT^2) = 140{,}310\ FT^2$

VOL. PROVIDED = 140,310 FT^2 @ ELEV. 7.35

VOLUME OF ASH IN CDF 1:

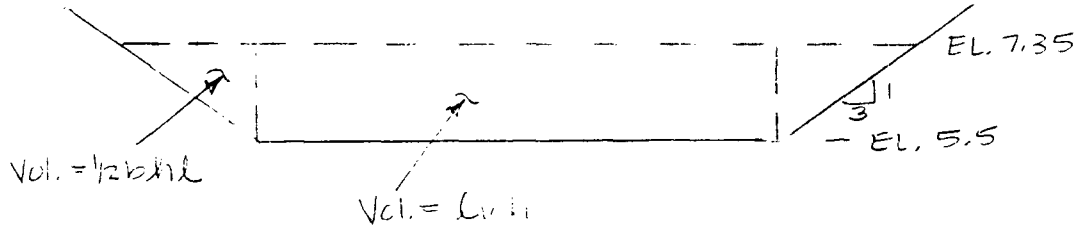

CROSS SECTION B-B *

N.T.S.

* See Final Grading Plan - Drawing set for location

The ERM Group® Environmental Resources Management, Inc. • Exton, Pennsylvania 19341 • (215) 524-3500

Project NEW BEDFORD HARBOR **W.O. No.** F00590001 **Sheet** 2 **of** 5
Subject VOL. OF BERM CALCULATIONS **By** JLT **Date** 15 JULY 91
Chkd by GBB **Date** 8-22-91

STORAGE REQUIRED FOR BERM MATERIAL:

VOL OF BERM FROM CROSS SECTION A-A*

62 SQUARES @ 1 SQUARE = 2.5 ft^2

AREA OF BERM = 62(2.5 ft^2) = 155 ft^2

ASSUMING UNIFORM BERM OF 705 FT. IN LENGTH

VOLUME = (705 FT)(155 FT^2) = 109,275 $FT.^3$

VOL OF BERM FROM CROSS SECTION B-B* (ADJACENT TO PROP. ROAD)

46 SQUARES @ 1 SQUARE = 2.5 FT^2

AREA OF BERM = 46(2.5 FT^2) = 115 FT^2

ASSUMING UNIFORM BERM OF 235 FT IN LENGTH

VOLUME = (235 FT)(115 FT^2) = 27,025 FT^3

VOL. OF BERM FROM CROSS SECTION B-B* (ADJACENT TO RIVER)

39 SQUARES @ 1 SQUARE = 2.5 FT^2

AREA OF BERM = 39(2.5 FT^2) = 97.5 FT^2

ASSUMING UNIFORM BERM OF 240 FT. IN LENGTH

VOLUME = (240 FT)(97.5 FT^2) = 23,400 FT^3

TOTAL VOLUME OF BERM = 109,275 FT^3 + 27,025 FT^3 + 23,400 FT^3

= 159,700 FT^3 FROM BERM CUT

* See Final Grading Plan in Drawing set for cross section locations.

The ERM Group® Environmental Resources Management, Inc. • Exton, Pennsylvania 19341 • (215) 524-3500

Project NEW BEDFORD HARBOR **W.O. No.** [illegible] **Sheet** 3 **of** 5
Subject STORAGE PROVIDED UNDERNEATH CAP **By** JLT **Date** 7.15.91
Chkd by GBE **Date** 8.22.91

ASSUMPTIONS : 1) ENTIRE FLOOR OF CDF I AND DEBRIS CELL IS 7.5'
(ACTUAL EL. OF CDF = 7.35')
2) CAP SLOPES ARE 3% MINIMUM
3) CAP CONTOURS ARE RECTANGULAR

DETERMINE : VOLUME BETWEEN EL. 7.5' AND BOTTOM OF CAP

ELEV (FT)	AREA (FT.^{2})	Δ VOL (FT.^{3})	ΣVOL (FT^3)
14.3	0		0
		119	
14.0	792		119
		6131	
13.0	11,470		6250
		21,135	
12.0	30,800		27,385
		42,798	
11.0	54,796		70,183
		69,167	
10.0	83,538		139,350
		104,229	
9.0	124,920		243,579
		50,324	
8.6	126,700		293,903

= VOLUME PROVIDED UNDERNEATH CAP (SEE FIGURE 1) sheet 5 OF 5.

VOL. REQUIRED = 326,700 FT^3 (debris) + 159,700 FT^3 (berm) = 486,400 FT^3

The ERM Group® Environmental Resources Management, Inc. • Exton, Pennsylvania 19341 • (215) 524-3500

Project NEW BEDFORD HARBOR W.O. No. F[illegible]59.00 Sheet 4 of 5
Subject CAP DESIGN – STORAGE VOLUME By JLT Date 7.15.91
Chkd by GPB Date 8.27.91

VOLUME PROVIDED IN BASIN

FROM EL 7.35' (APPROXIMATE TOP OF ASH) TO EL. 7.5' (ASSUMED FLOOR LEVEL OF ADJACENT CELL)

VOLUME = 78,390 FT^2 x (0.15 FT) = 11,758 FT^3

FROM EL. 7.5' TO EL. 8.6 (TOP OF LEVEL DEBRIS)

ELEV (FT)	AREA (FT^2)	ΔVOL (FT^3)	ΣVOL (FT^3)
7.5	125,235		0
		138,564	
8.6	126,700		138,564

TOTAL VOLUME PROVIDED UNDER 3% SLOPING CAP

VOL = 293,903 ft^3 + 11,758 ft^3 + 138,564 ft^3 =

VOL = 444,225 ft^3

EXCESS FILL MATERIAL (FROM BERM) = 42,175 ft^3 *

* USE EXCESS FILL MATERIAL FROM BERM AS SUBGRADE FOR CAP (INITIAL 6")

NOTE. ELEVATIONS FOR FINAL GRADE ARE APPROXIMATE – DEBRIS SHOULD BE GRADED OUT AT 3% SLOPES AS PER GRADING CONFIGURATION – MATERIAL CUT FROM BERM SHOULD BE UNIFORMLY DISTRIBUTED OVER THE GRADED DEBRIS TO MAINTAIN THE 3% GRADE.

117

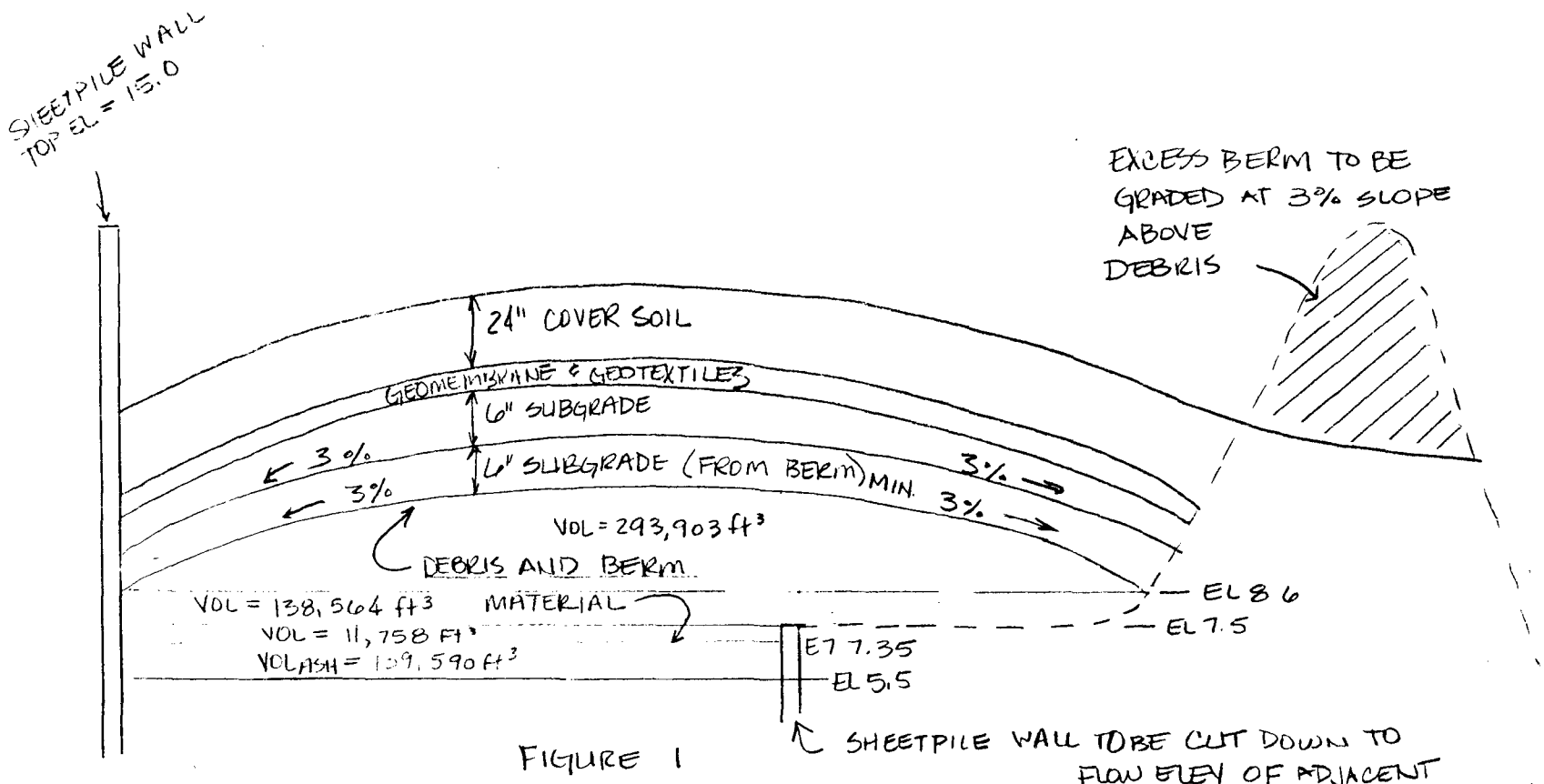

FIGURE 1

3' UNIFORM CAP DESIGN - N.T.S.

The ERM Group® Environmental Resources Management, Inc. • Exton, Pennsylvania 19341 • (215) 524-3500

Project NEW BEDFORD HARBOR W.O. No. F0059 00 01 Sheet 1 of 6
Subject DRAINAGE AREAS By JLT Date 7/25/91
Chkd by GRS Date 8.22.91

DRAINAGE AREAS

DRAINING INTO CDF 1, 2 & 3 : A = 247,647 ft²

DRAINING INTO ADJACENT CELL : A = 67,324 ft²

(TOTAL DRAINAGE AREA w/i 16' CONTOUR : A = 314,971 ft²)

STORM PIPES DRAINING INTO CDF 1

PIPE NEAR PROP. ROAD : A = 56,328 ft²
PIPE NEAR RIVER : A = 58,422 ft²
} USE 1.3 AC FOR PIPE SIZING

Worksheet 3: Time of concentration (T_c) or travel time (T_t)

119/

Sheet 2 of 6

Project NEW BEDFORD HARBOR By JLT Date 7/19/91

Location MASS. Checked GBS Date 8-27-91

Circle one: Present Developed DURING DREDGING OPERATION

Circle one: T_c T_t through subarea

NOTES: Space for as many as two segments per flow type can be used for each worksheet.

Include a map, schematic, or description of flow segments.

Sheet flow (Applicable to T_c only)		Segment ID			
1. Surface description (table 3-1)		GRAVEL			
2. Manning's roughness coeff., n (table 3-1) ..		0.011			
3. Flow length, L (total L ≤ 300 ft)	ft	300			
4. Two-yr 24-hr rainfall, P_2	in	3.3			
5. Land slope, s	ft/ft	0.0059			
6. $T_t = \frac{0.007\,(nL)^{0.8}}{P_2^{0.5}\,s^{0.4}}$ Compute T_t	hr	0.078	+		= 0.078

Shallow concentrated flow		Segment ID			
7. Surface description (paved or unpaved)		UNPAVED			
8. Flow length, L	ft	145			
9. Watercourse slope, s	ft/ft	0.008			
10. Average velocity, V (figure 3-1)	ft/s	1.45			
11. $T_t = \frac{L}{3600\,V}$ Compute T_t	hr	0.028	+		= 0.028

Channel flow		Segment ID			
12. Cross sectional flow area, a	ft^2	2			
13. Wetted perimeter, p_w	ft	6.11			
14. Hydraulic radius, $r = \frac{a}{p_w}$ Compute r	ft	0.33			
15. Channel slope, s	ft/ft	0.02			
16. Manning's roughness coeff., n		0.011			
17. $V = \frac{1.49\,r^{2/3}\,s^{1/2}}{n}$ Compute V	ft/s	9.15			
18. Flow length, L	ft	200			
19. $T_t = \frac{L}{3600\,V}$ Compute T_t	hr	0.006	+		= 0.006

20. Watershed or subarea T_c or T_t (add T_t in steps 6, 11, and 19) ..... hr 0.11 (6.7 MIN.)

T = 6.3 min

The ERM Group **Environmental Resources Management, Inc.** • Exton, Pennsylvania 19341 • (215) 524-3500

Project NEW BEDFORD HARBOR W.O. No. F0059 0001 Sheet 3 of 6
Subject STORM DRAIN PIPE SIZING By JLT Date 7/24/91
Chkd. by GEE Date 8.27.91

STORMDRAIN PIPE

A_1 (draining to North end of CDF 1) = 58,422 ft^2 = 1.3 Ac
A_2 (draining to South end of CDF 1) = 56,328 ft^2 = 1.3 Ac

USE A = 1.3 Ac
t_c = 6.7 min. (From TR-55 Calc.)
I = 6.3 in/hr (Yarnell's Standard Rainfall-Intensity-Duration Curves)

(based on 1 hr - 25 yr event : 2.2 in. rainfall from "Technical Paper No. 40 : Rainfall Frequency Atlas of the U.S" for New Bedford MA)

C = 0.50 (for gravel area)

Using Rational Method $Q = CIA$

$Q = (0.50)(6.3)(1.3) = \underline{4.1 \text{ cfs}}$

Determine pipe size using Manning's Eqn.

$$Q = \frac{1.49}{n} A R_h^{2/3} S^{1/2} \quad ; A = \frac{\pi d^2}{4} \quad R = \frac{d}{4}$$

for <u>smooth wall HDPE pipe</u>: n = 0.012

PROJECT: NEW BEDFORD HARBOR

DESIGNER: JLT

DATE: 8.26.91

HYDROLOGIC AND CHANNEL INFORMATION

storm drain pipe at north end of CDF 1

Q_1 = 4.1 cfs TW_1 = _____

Q_2 = _____ TW_2 = _____

(Q_1 = DESIGN DISCHARGE, SAY Q_{25}
Q_2 = CHECK DISCHARGE, SAY Q_{50} OR Q_{100})

SKETCH

STATION: _____

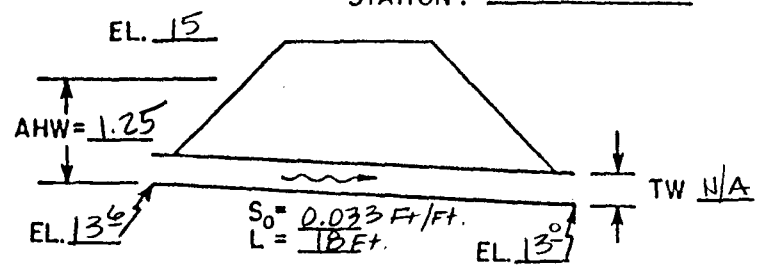

MEAN STREAM VELOCITY = _____

MAX. STREAM VELOCITY = _____

CULVERT DESCRIPTION (ENTRANCE TYPE)	Q	SIZE	HEADWATER COMPUTATION: INLET CONT. $\frac{HW}{D}$	INLET CONT. HW	OUTLET CONTROL HW=H + h_o − LS_o: K_e	H	d_c	$\frac{d_c+D}{2}$	TW	h_o	LS_o	HW	CONTROLLING HW	OUTLET VELOCITY	COST	COMMENTS
Projecting HDPE Pipe	4.1	15"	1.1	1.1	—	—	—	—	—	—	—	—	—	—		INLET CONTROL

SUMMARY & RECOMMENDATIONS:

CHK'D. GBE 8.26.91

Sht 4 of 6

121

Figure 7

PROJECT: NEW BEDFORD HARBOR

DESIGNER: _____

DATE: _____

HYDROLOGIC AND CHANNEL INFORMATION

storm drain pipe at south end of CDF 1

Q_1 = 4.1 cfs TW_1 = _____

Q_2 = _____ TW_2 = _____

(Q_1 = DESIGN DISCHARGE, SAY Q_{25}
Q_2 = CHECK DISCHARGE, SAY Q_{50} OR Q_{100})

SKETCH

STATION: _____

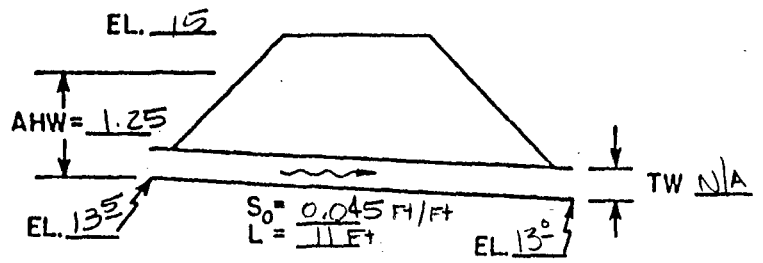

MEAN STREAM VELOCITY = _____

MAX. STREAM VELOCITY = _____

CULVERT DESCRIPTION (ENTRANCE TYPE)	Q	SIZE	HEADWATER COMPUTATION: INLET CONT. HW/D	INLET CONT. HW	OUTLET CONTROL HW=H+h₀−LS₀: K_e	H	d_c	$\frac{d_c+D}{2}$	TW	h_o	LS_o	HW	CONTROLLING HW	OUTLET VELOCITY	COST	COMMENTS
Projecting HDPE pipe	4.1	15"	1.1	1.1												INLET CONTROL

SUMMARY & RECOMMENDATIONS:

CHK'D. GEF 8-26-91

Sht 5 of 6

122

Figure 7

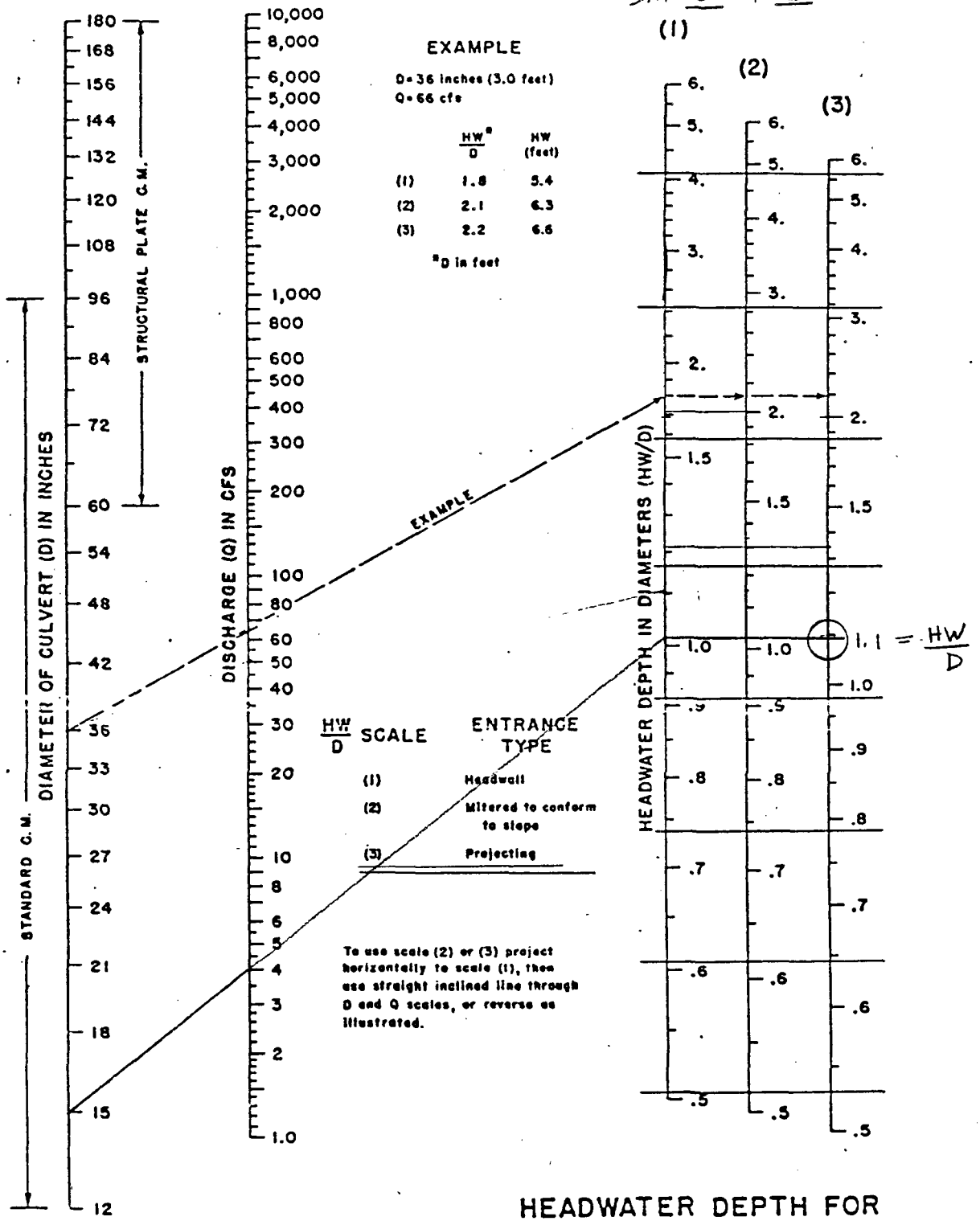

HEADWATER DEPTH FOR C. M. PIPE CULVERTS WITH INLET CONTROL

BUREAU OF PUBLIC ROADS JAN. 1963

REF: "Hydraulic Charts for the Selection of Highway Culverts", U.S. Department of Commerce, Bureau of Public Roads

The ERM Group Environmental Resources Management, Inc. • Exton, Pennsylvania 19341 • (215) 524-3500

Project NEW BEDFORD HARBOR W.O. No. F0059 00 01 Sheet 1 of 1
Subject VOL OF RAINWATER TREATED By JLT Date 7/24/91
Chkd. by GBS Date 8.22.91

VOL. OF STORMWATER TO BE COLLECTED IN CDF 1, 2 & 3 & TREATED:

AREA = 247,647 ft² = 5.7 Ac

(1) FOR 25-YEAR EVENT: AVERAGE RAINFALL DEPTH FOR 1 HOUR STORM = 2.2 in. (REF. "TECHNICAL PAPER NO. 40: RAINFALL FREQUENCY ATLAS OF THE U.S." FOR NEW BEDFORD MA.)

$$\text{VOLUME COLLECTED} = 247{,}647\ ft^2 \left(2.2\ in\right)\left(\frac{1\ ft}{12\ in}\right) = \underline{\underline{45{,}402\ ft^3}}$$

(2) FOR ANNUAL AVERAGE:

FOR YEARS 1974 - 1978: 40.93 inches
(FROM HELP MODEL DATA)

$$\text{VOLUME COLLECTED} = 247647\ ft^2 \left(40.93\ in.\right)\left(\frac{1\ ft}{12\ in}\right) =$$

$$\text{VOL.} = \underline{\underline{844{,}683\ ft^3}}$$

The ERM Group® Environmental Resources Management, Inc. • Exton, Pennsylvania 19341 • (215) 524-3500

Project NEW BEDFORD HARBOR W.O. No. F00 59 00 01 Sheet 1 of 3
Subject DRAINAGE CHANNEL DESIGN By JLT Date 7/25/91
Chkd by GBS Date 8.22.91

CONSTRUCT CHANNELS PER MIN. REQUIREMENTS

AREA FOR CHANNEL DRAINING NORTHERN PORTION OF CDF1 = 0.4 Ac
AREA FOR CHANNEL DRAINING SOUTHERN PORTION OF CDF1 = 0.8 Ac

- USE A = 0.8 Ac for both channels for uniform construction

- CHANNELS DESIGNED USING "HANDBOOK OF CHANNEL DESIGN FOR SOIL AND WATER CONSERVATION", U.S. DEPARTMENT OF AGRICULTURE, SOIL CONSERVATION SERVICE.
- CHANNEL SLOPES VARY BETWEEN 1% (MIN.) - 2% (MAX.)

- CHANNELS TO BE VEGETATED WITH RETARDANCE D LINING PER "HANDBOOK OF CHANNEL DESIGN FOR SOIL AND WATER CONSERVATION" REQ'TS

- $Q_{REQUIRED} = 2.75\ cfs/ac \times 0.8\ ac = 2.2\ cfs$

CHANNEL DIMENSIONS:

$R_h = 0.37$ ft.
$A = 3.7\ ft^2$
$d = 0.55$ ft.
$T = 10$ ft

- MAX. VELOCITY FOR 0-5% SLOPE = 5-7 FPS FOR LOW VEGETAL RETARDANCE LINING

- add 0.5' freeboard

The ERM Group® Environmental Resources Management, Inc. • Exton, Pennsylvania 19341 • (215) 524-3500

Project NEW BEDFORD HARBOR **W.O. No.** F0059 00 01 **Sheet** 2 **of** 3
Subject DRAINAGE CHANNEL DESIGN **By** JLT **Date** 7/25/91
Chkd by GBS **Date** 8.22.91

CHANNEL DESIGN (CONT.)

FOR MIN. 1% SLOPE

$n = 0.12$ (FIG. 17)

$$Q_{design} = \frac{1.49}{n} A R_h^{2/3} S^{1/2} = \frac{1.49}{0.12} (3.7)(0.37)^{2/3}(0.01)^{1/2}$$

$Q_{design} = \underline{2.4 \text{ cfs}}$

$Q = AV$ (at full flow)

$V = 2.4/3.7 = \underline{0.6 \text{ fps}}$ (acceptable)

FOR MAX. 2% SLOPE

$n = 0.08$

$$Q_{design} = \frac{1.49}{0.08} (3.7)(0.37)^{2/3}(0.02)^{1/2}$$

$Q_{design} = \underline{5.0 \text{ cfs}}$

$Q = AV$ (at full flow)

$V = 5.0/3.7 = \underline{1.4 \text{ fps}}$ (acceptable)

The ERM Group® Environmental Resources Management, Inc. • Exton, Pennsylvania 19341 • (215) 524-3500

Project NEW BEDFORD HARBOR W.O. No. F00 59 00 01 Sheet 3 of 3
Subject DRAINAGE CHANNEL DESIGN By JLT Date 7/25/91
Chkd by GBB Date 8.22.91

CHANNEL DESIGN (CONT.)

CHANNEL DIMENSIONS PER FIG. 12

FOR d = 0.55 ft, T = 10 ft:

approx. channel side slopes = 4.5 : 1

For d = 1.05 ft, T = 14 ft

approx. channel side slopes = 3.3 : 1

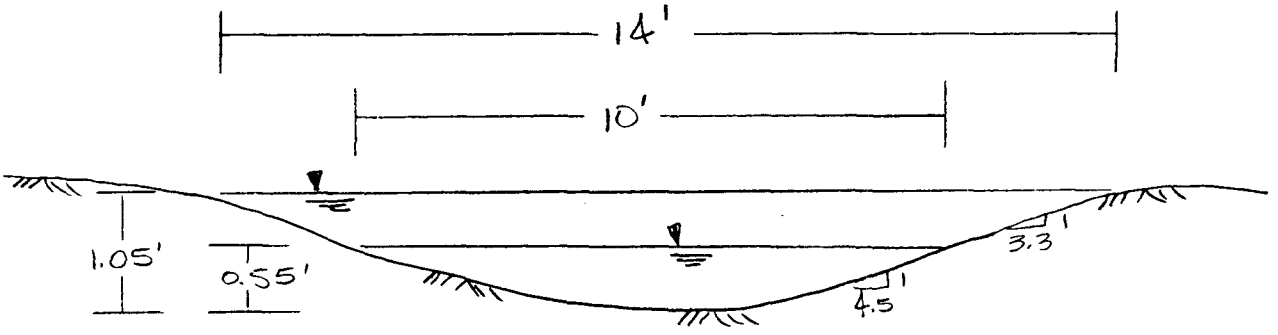

TYPICAL SECTION

N.T.S.

The ERM Group® Environmental Resources Management, Inc. • Exton, Pennsylvania 19341 • (215) 524-3500

Project NEW BEDFORD HARBOR W.O. No. F00590001 Sheet 1 of 2
Subject ANCHOR TRENCH DRAIN PIPES By JLT Date 7/29/91
Chkd by GCB Date 8.22.91

PROVIDE 4 OUTLET PIPES AT LOCATIONS INDICATED ON SUBGRADE DRAWING.

CAPACITY of 4" PERF. FLEXIBLE HDPE DRAIN (CORRUGATED)

TOTAL LENGTH OF PERF. 4" ϕ PIPE $\cong$ 1460 ft

EACH SEGMENT OF PIPE = 1460 ÷ 8 = 183 ft (max.)

Q = KIA for determining actual flow in pipe

K = 20 cm/s = 0.66 fps

i = 0.03 ft/ft

$A = 183\ ft \times 0.25\ in \times \frac{1\ ft}{12\ in} = 3.8\ ft^2$

$Q = (0.66)(0.03)(3.8) = \underline{0.075\ cfs}$

Full Flow capacity of pipe @ min. 0.5% slope:

$Q = \frac{1.49}{n} A R^{2/3} S^{1/2}$

$= \frac{1.49}{0.015}\left(\pi \frac{(4/12)^2}{4}\right)\left(\frac{4/12}{4}\right)^{2/3}(0.005)^{1/2}$

$\underline{Q = 0.11\ cfs}$

∴ 4" PIPE w/ 4 OUTLETS @ 0.5% is adequate

The ERM Group® Environmental Resources Management, Inc. • Exton, Pennsylvania 19341 • (215) 524-3500

Project NEW BEDFORD HARBOR **W.O. No.** F00 59 00 **Sheet** 2 **of** 2
Subject OUTLET DRAIN (ANCHOR TRENCH) PIPES **By** JLT **Date** 7/29/91
Chkd by GBB **Date** 8·22·91

FOR OUTLET PIPES (ACTUAL SEGMENTS PROVIDED = 146± FEET)

FOR 2-146' SEGMENTS DRAINING TO COMMON 4" ϕ CORRUGATED, HDPE DRAIN PIPE:

$Q = KIA$; $K = 0.66$ fps

$i = 0.03$ ft/ft

$A = 2(146\text{ ft}) \times 0.25\text{ in} \times \frac{1\text{ ft}}{12\text{ in}}$

$= 6.08$

$Q = 6.08(0.66)(0.03) = 0.12$ cfs

Provide minimum 0.7%:

$$Q_{design} = \frac{1.49}{n} A R^{2/3} S^{1/2}$$

$$= \frac{1.49}{0.015} \frac{(\pi(4/12)^2)}{4} \left(\frac{4/12}{4}\right)^{2/3} (0.007)^{1/2}$$

$= 0.13$ cfs ✓

$Q = AV$

$$V = \frac{0.13}{\frac{\pi(4/12)^2}{4}} = 1.5 \text{ fps}$$

(PERMISSIBLE VELOCITY FOR NSA NO. R-1 R/P RAP = 2.5 fps)

The ERM Group® Environmental Resources Management, Inc. • Exton, Pennsylvania 19341 • (215) 524-3500

Project NEW BEDFORD HARBOR W.O. No. FCC-59 Sheet 1 of 5
Subject WORST CASE STABILITY By EWK Date 24-JUL-91
ANALYSIS OF COVER SOILS Chkd by SPA Date 24-JUL-91

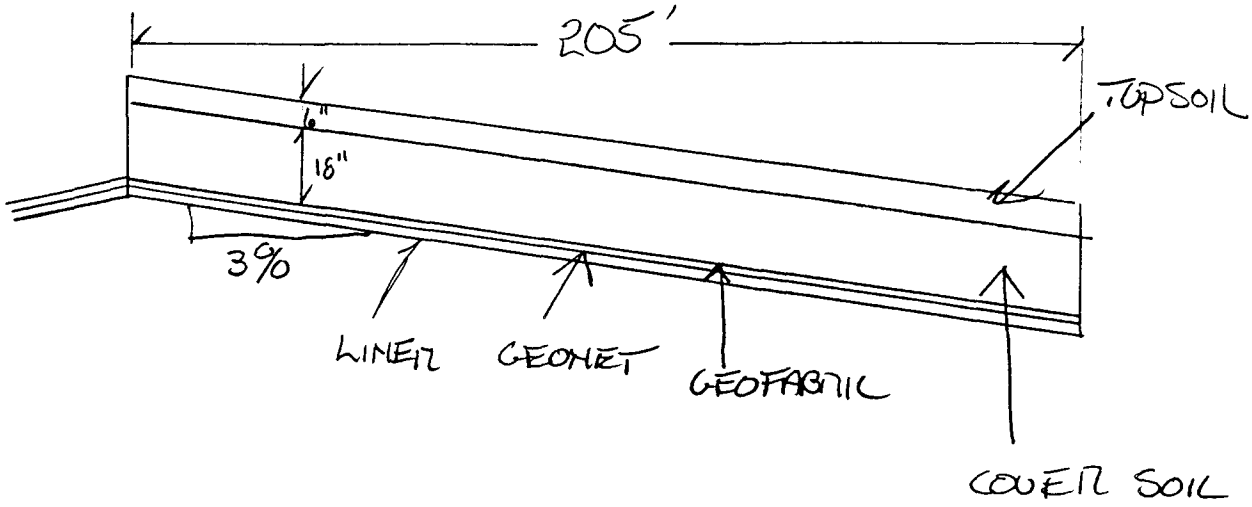

ASSUMPTIONS -

FREEZING WATER IN GEONET WILL LIFT NET OFF LINER ∴ FRICTION BETWEEN NET AND LINER IS ZERO

FORCE DRIVING FAILURE

WT OF SOIL DOWN 3% SLOPE.

FORCES RESISTING.

MIN TENSILE STR OF GEOFABRIC

MIN TENSILE STR OF GEONET

PASSIVE RESISTANCE AT TOE.

The ERM Group® Environmental Resources Management, Inc. • Exton, Pennsylvania 19341 • (215) 524-8500

Project NEW BEDFORD HARBOR W.O. No. F00-59 Sheet 2 of 5
Subject WORST CASE STABILITY ANALYSIS By EVK Date 24-JUL-91
CH CALFED DAM Chkd by Date

ASSUMPTIONS

- COVER SOIL
  115 #/CF $\phi = 20^\circ$ ASSUMED PARAMETERS BASED ON SPECIFICATIONS
- TOP SOIL
  90 #/CF $\phi = 20^\circ$
- MIN STRENGTH OF GEOMET. 35 #/IN
- MIN STRENGTH OF GEOTEXTILE 60 #/IN

The ERM Group® Environmental Resources Management, Inc. • Exton, Pennsylvania 19341 • (215) 524-3500

Project NEW BEDFORD HARBOR W.O. No. F00-59 Sheet 3 of 5
Subject WORST CASE STABILITY ANALYSIS OF COLLED SOILS By EUK Date 24-JUL-91
Chkd by Date

FORCES DRIVING

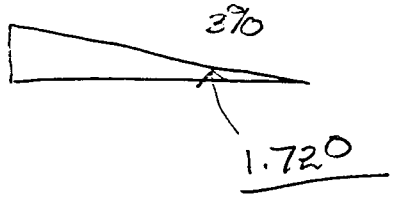

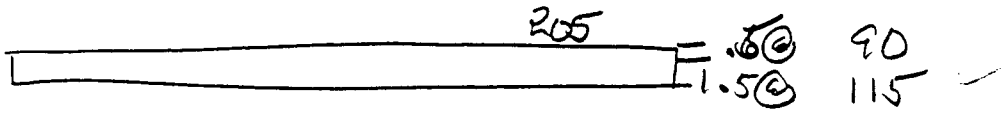

FORCE DRIVING

WT OF SOIL (COS θ) = F DRIVE

$205(.5 * 90 + 1.5 * 115)(\cos 1.72) = 1337$ #/FT SLOPE (**)

FORCE RESISTING

- PASSIVE SOIL RESISTANCE

$P_U = \frac{1}{2} \gamma H^2 K_p$

$K_p = \frac{1 + \sin\phi}{1 - \sin\phi}$

$K_p = \frac{1 + \sin 20}{1 - \sin 20}$

$P_U = \frac{1}{2}(100)(2)^2(2.04)$

$K_p = 2.04$

$P_U = 443.7$ #/FT SLOPE

The ERM Group® Environmental Resources Management, Inc. • Exton, Pennsylvania 19341 • (215) 524-3500

Project NEW BEDFORD HARBOR W.O. No. F00-59 Sheet 4 of 5
Subject WORST CASE STABILITY By EGK Date 24-JUL-91
ANALYSIS OF COVER SOILS. Chkd by _____ Date _____

- FABRIC STRENGTH

60 #/IN (12 IN) = 720 #

- GEONET STRENGTH =

35 #/IN (12 IN) = 420

FORCE RESISTING

443.7 + 720 + 420 = 1583.70

$$FS = \frac{FD}{FR} \quad \frac{1337}{1583} = \underline{\underline{1.18}}$$

OUT OF TYPICAL ACCEPTIBLE RANGE FOR GEOTECH ENG (1.4-1.5 TYP MIN)

The ERM Group® Environmental Resources Management, Inc. • Exton, Pennsylvania 19341 • (215) 524-3500

Project NEW BEDFORD HARBOR W.O. No. F00-59 Sheet 5 of 5
Subject REINFORCING FABRIC FOR WORST CASE STABILITY ANALYSIS. By EUK Date 24-JUL-91
Chkd by Date

FORCE DRIVING DOWN SLOPE
(FROM PAGE 3 **)

1337 #/FT

MINIMUM STRENGTH TO MAINTAIN A FS GREATER THAN 1.5 WITH NO RESISTANCE.

$$1337\ \#/FT \times \frac{1.5\ FS}{1} \times \frac{1\ FT}{12\ IN} = 167\ \#/IN$$

FABRIC STR
MINIMUM

SELECT A FABRIC WITH THE FOLLOWING CRITERIA:

1. MIN WIDE WIDTH TENSILE STRENGTH 250 #/IN (ASTM D-4595)
2. MAX ELONGATION AT YIELD 10%

RESPONSE TO COMMENT #1 - BOLTON

The incinerated ash will be placed in the Confined Disposal Facility (CDF) #1 to an approximate elevation shown on the Drawings. The HDPE geomembrane, which lines the existing cell, will be detached from both sheetpile walls and folded over the ash. The existing sheetpile wall between CDF #1 and the adjacent cell on the eastern portion of the site will then be demolished to the top of ash elevation. The debris from the adjacent cell, which includes concrete and other construction waste, will be spread over the top of the ash so that the debris is distributed between CDF #1 and the existing cell. The excess berm will then be spread over the debris and graded out at 3% slopes as shown on the Drawings. This berm will provide the initial 6 inches of the cap. The next 6 inches will be imported select fill that meets the requirements in the specifications and does not contain objects that will produce tearing or punctures in the geomembrane. If the excess berm material cannot satisfy the initial 6 inches of the subgrade layer, then additional select fill will be imported so that 1 foot of subgrade can be achieved, with at least 6 inches of the subgrade to be select fill.

The single most important function of a cover system is to minimize percolation of surface water through the cover. Percolation can be estimated by water balance analysis. Water balance takes into account the amount of water that is applied to the cover (i.e., rainfall, irrigation, etc.) and the amount that leaves the cover (i.e., runoff, evaporation, transpiration, and subsurface drainage). The difference is considered to be the water percolating through the cover.

The amount of percolation was estimated by HELP (Hydrogeologic Evaluation of Landfill Performance - EPA, 1984a and 1984b) computer model. The HELP model takes into account environmental effects such as average solar radiation, vegetation, leafyness of the cover vegetation, and effective evaporation zone depth. The soil parameters that are included in the model are hydraulic conductivity, porosity, field capacity, and wilting point. The HELP model uses the design of the cover system and accounts for number and type of layers (i.e., barrier, drainage, vertical permeation, and waste), thickness of layers, slope of the barrier layer and lateral distance to a drain. Input parameters for this model are discussed below.

Daily Precipitation Data: The daily precipitation data was taken from the NOAA records for Boston, Massachusetts, located about 45 miles from the site. The daily precipitation data for 5 years (1974-1978) inclusive was used for the data base.

Average Monthly Temperature: The average monthly temperature data was also taken from the NOAA records of Boston, Massachusetts.

Average Solar Radiation: The values of solar radiation of Boston were used.

Leaf Area Index (LAI): Leaf area index may range from 0 to 3 where a value of 0 represents bare ground and 3 represents the maximum possible vegetation cover.

Vegetation: This is an indication of surface cover by vegetation. The model accepts 7 types of vegetation cover from bare ground; good and fair row crops; excellent, good, fair, and poor stands of grass. The expected quality of vegetation for the New Bedford site is a good stand of grass.

Winter Effects on Cover Vegetation: The HELP model accepts 13 different LAI values with time of the year to account for dormant periods of winter.

Evaporation Zone Depth: The evaporation zone depth depends on the type of vegetation and its quality of coverage. A good to excellent stand of grass has an effective evaporation zone depth of 28 inches.

Hydraulic Conductivity: The hydraulic conductivity (vertical) of the compacted clay liner is 1 X 10 -7 cm/sec and that of the barrier soil with flexible membrane liner is 2.1 X 10 -6. The HELP model assumes that the horizontal and vertical permeabilities are identical.

Porosity, Field Capacity, and Wilting Point: Porosity is the volume of voids in a unit volume of soil. The field capacity is the volume of water that a unit volume of soil can retain against the force of gravity. The wilting point is the maximum volumetric water content below which plants can not withdraw water from soil. These values are obtained from the default soil values for the associated USDA soil types.

Layers of Soils: The HELP model can accept up to nine layers of five different types of soil layers. The five types of layers that can be modeled are: 1) Vertical Permeation Layer (top soil and cover soil); 2) Lateral Drainage Layer (sand or equivalent); 3) Barrier Soil Layer (clay liner); 4) Waste Layer (or backfill); and 5) Barrier Soil with an Impermeable Liner.

The cover components to be used for the Confined Disposal Facility are shown in the design calculations.

Geometry of the Layout: The HELP model also takes into account the geometry of the site including the slope of the barrier layer, the distance to the nearest open drain and the total surface area of the site. A conservative value of the three percent slope with 182 feet of slope length is used.

The complete results of HELP output is presented in Appendix F for the five year period (1974-1978) of rainfall data. The analysis of the proposed cap verses a Massachusetts DEP solid waste cap demonstrates that the proposed cap, which includes a 60 mil, HDPE geomembrane in place of a compacted

clay layer is more effective in preventing water from penetrating the cap and thus reducing the amount of leachate generated in the CDF.

Due to concerns with the freezing of the cap layers, the stability of the cap was analyzed assuming a worse case scenario. In the event that the drainage layer within the cap should freeze completely, thus resulting in no friction between the net and the geomembrane, additional woven geotextile filter fabric will be placed over the non-woven filter fabric as reinforcement. This reinforcing filter fabric will prevent sliding of the cap at an acceptable factor of safety. The use of a 60 mil HDPE geomembrane was agreed to upon by the Commonwealth of Massachusetts. In our experiences, the 60 mil geomembrane is found to be more durable during placement and is less likely to sustain damage from equipment and workers. The geotextiles used were selected based on the requirements of the solid waste cap agreed to by the Commonwealth of Massachusetts. Thus the materials and its properties became the basis for the design.

Anchor trenches will be constructed along the perimeter of the cap to collect lateral drainage across the drainage layer. The crested cap design allows the self weight of the cap to hold the liner in place. It also does not create any downward pull of the liner in the trench as might be expected in a cell liner use. The trench will contain a 4 inch perforated HDPE pipe surrounded by aggregate. The geomembrane will line the bottom of the trench with the geotextiles wrapping underneath the 4 inch perforated HDPE pipe. Aggregate will be placed over the pipe and topped with the overlapping filter fabrics. The drainage in the trench will be transported via perforated pipes to 4 outlets shown on the drawings. An additional piece of non-woven geotextile filter fabric will be wrapped around the pipe and placed over the aggregate in order to prevent fines from entering and clogging the drain.

The cap is designed with minimum 3% slopes to allow for adequate drainage off the cap. Drainage ditches will be constructed on the cap to divert runoff away from the existing sheetpile wall. Runoff will sheet flow off the northern and eastern portions of the cap. Areas draining off the southern and western slopes will be carried in the drainage channels to prevent flooding of the roadway. All drainage will discharge to the River.

134D/

Environmental Resources Management, Inc. • Exton, Pennsylvania 19341 • (215) 524-3500

Project NEW BEDFORD HARBOR W.O. No. FOO-59 Sheet 1 of 3
Subject GEONET TRANSMISSIVITY By EUK Date 11-1-91
Chkd by Date

- TRANSMISSIVITY OF GEONET DRAINAGE LAYER
  - 10 $\frac{\text{GAL}}{\text{MIN-FT}_{\text{WIDTH}}}$

- CALCULATE ALLOWABLE FLOW IN NET

$$q_{ALL} = q_{ULT}\left[\frac{1}{FS_{IN} \times FS_{CR} \times FS_{CC} \times FS_{BC}}\right]$$

q_{ALL} – FLOW RATE FOR DESIGN

q_{ULT} – ULTIMATE FLOW RATE (10 GAL/MIN-FT)

FS_{IN} – FACTOR OF SAFETY FOR ELASTIC DEFORMATION OF ANY TEXTILE IN TO CORE

FS_{CR} – FOS FOR CREEP

FS_{CC} – FOS FOR CHEMICAL PERCIP

FS_{BC} – FOS FOR BIO FOULING.

134E/

Table 6.10 - Recommended Preliminary Factor of Safety Values to Determine Allowable Flow Rate of Geocomposites

Application Area	Factor of Safety Value for Eq. 6.3			
	FS_{IN}	FS_{CR}*	FS_{CC}	FS_{BC}
sport fields, capillary breaks	1.0 to 1.2	1.0 to 1.2	1.0 to 1.2	1.1 to 1.3
roof and plaza decks	1.2 to 1.4	1.0 to 1.2	1.0 to 1.2	1.1 to 1.3
retaining walls, seeping rock and soil slopes	1.3 to 1.5	1.2 to 1.4	1.1 to 1.5	1.0 to 1.5
drainage blankets	1.3 to 1.5	1.2 to 1.4	1.0 to 1.2	1.0 to 1.2
surface water drains for landfill caps	1.3 to 1.5	1.2 to 1.4	1.0 to 1.2	1.2 to 1.5
secondary leachate collection (landfill)	1.5 to 2.0	1.4 to 2.0	1.5 to 2.0	1.5 to 2.0
primary leachate collection (landfill)	1.5 to 2.0	1.4 to 2.0	1.5 to 2.0	1.5 to 2.0
strip (wick) drains**	1.5 to 2.5	1.0 to 2.5	1.0 to 1.2	1.0 to 1.2
highway edge drains	1.2 to 1.8	1.5 to 3.0	1.1 to 1.5	1.0 to 1.2

*These values assume that the "q_{ult}" value was obtained using an applied normal pressure of 2 to 3 times the field anticipated maximum value. If not, the values must be increasd.
**An additional term for kinking must be included, where FS_{KG} = 1.0 to 4.0.

** FROM "DESIGNING WITH GEOSYNTHETICS - 2ND EDITION" R.M. KOERNER.

$$= 10 \frac{GAL}{MIN\text{-}FT} \left[\frac{1}{1.4 \times 1.3 \times 1.1 \times 1.3} \right]$$

$$q_{ALL} = 3.64 \frac{GAL}{MIN\text{-}FT}$$

134F/

The ERM Group — Environmental Resources Management, Inc. • Exton, Pennsylvania 19341 • (215) 524-3500

Project MBH W.O. No. F0059 Sheet 3 of 3
Subject GEONET TRANSMISSIVITY By EWK Date 11-1-91
Chkd by Date

MAX EXPECTED DRAINAGE FROM GEONET LAYER

→ FROM HELP RUN PEAK DAILY VALUE .0720 IN/DAY

→ $.0720 \frac{IN}{DAY} \quad 1 FT^2 \frac{1 FT}{12 IN} = .0060 FT^3/DAY$

$= .0449 GAL/DAY$

LONGEST DRAINAGE PATH ≈ 150 FT

⇒ $.0449 GAL/DAY * 150 FT \Rightarrow 6.8 \frac{GAL}{DAY-FT}$

⇒ $.0047 \frac{GAL}{MIN-FT}$

FS $\frac{.0047}{3.84} = 822$

Structural Calculations

The ERM Group® Environmental Resources Management, Inc. • Exton, Pennsylvania 19341 • (215) 524-3500

Project NEW BEDFORD W.O. No. F00-59 Sheet 1 of
Subject PRE-ENGINEER BLDG. FDN. By WHH Date 4-23-91
Chkd by SPS Date 8-27-91

PRELIMINARY FOUNDATION LOADS.

SNOW LOAD = 35 PSF
WIND SPEED = 90 MPH (EXPOSURE 'C') P_e = 25 PSF
$h/L < 0.3$ $\theta \approx 0°$ WINDWARD SUCTION = -0.70 LEEWARD SUCTION = -0.70

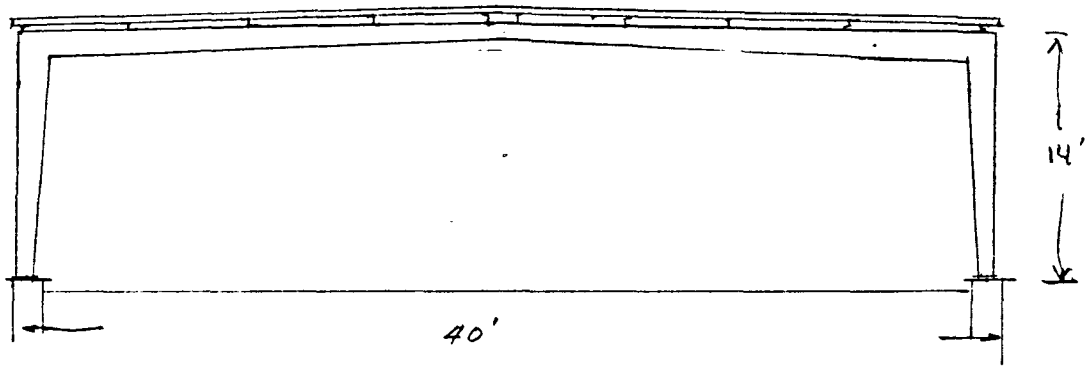

CENTER SPAN

DESIGN WIDTH = 15.0'

DEAD LOADS:

METAL DECK	=	2 PSF
INSULATION	=	2 PSF
ELECT/HVAC	=	3 PSF
PURLINS 5 x 10#/FT x 15' x 2 ÷ 40 x 15 =	=	2.5 PSF
SNOW LOAD:	=	35.0 PSF
FRAME LOAD (ASSUME)		30 PLF
COL LOAD (ASSUME)		30 PLF

VERTICAL COL LDS (CTR-FRAME)

ROOF = (2.0 + 2.0 (9.5) + 3.0 + 2.5)(15.0')(40'/2) = 2850
FRAME = (30.0)(40/2) + (30)(14) = 1020
D.L. = 3870#
SNOW = (35)(15.0)(40/2) L.L. = 10500#
DL + LL = 14,370#

VERTICAL COL LDS (1ST INTERIOR FR.)
DESIGN WIDTH = (15 + 20)(.5) = 17.50'

ROOF = P.S. req. (8.5)(17.5)(40'/2) = 2975
FRAME 1020
DL = 3995#
SNOW = (35)(17.5)(40/2) = 12250#
DL + LL = 16245#

The ERM Group — Environmental Resources Management, Inc. • Exton, Pennsylvania 19341 • (215) 524-3500

Project: NEW BEDFORD — W.O. No. F00-59" — Sheet 2 of
Subject: PRE-ENGINEERED BLDG FDN — By: WHN — Date: 4-24-91
Chkd by: SPS — Date: 8-27-91

END FRAMES

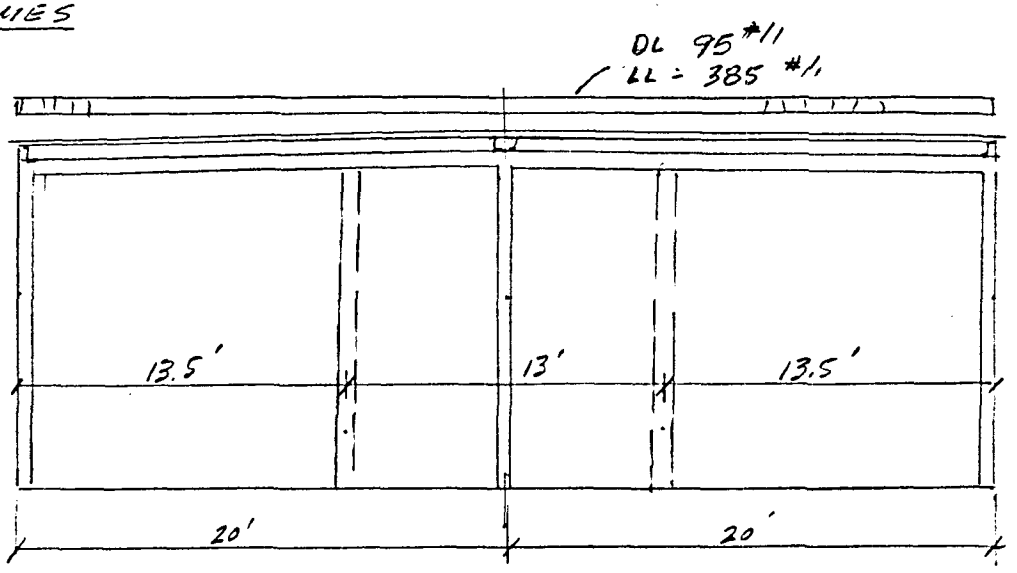

DESIGN WIDTH = 20'

ROOF LOADS:

ROOF DL = 8.5 psf (8.5)(10+1) = 93.5 #/FT
SNOW = (35)(11) = 385
478.5
SAY 480 #/FT

CORNER COLUMNS: (COL = 14 x 20 #/') = 280 #
DL = (95)(20)/2 = 950 # } 1230 #
LL = (385)(20/2) = 3850 #
DL + LL = 5080 #

CTR COL.
DL = (95)(20) + 280 = 2180 #
LL = (385)(20) = 7700 #
DL + LL = 9880 #

TWO COL END FRAME

CORNER COL^S = (95)(13.5)(.5) + 280 — DL = 921 #
= (385)(13.5/2) — LL = 2599
DL + LL = 3520 #

INTER COL^S = (95)(13+13.5)(.5) + 280 (13.25') — DL = 1539 #
= (385)(13.25) — LL = 5101 #
DL + LL = 6640 #

The ERM Group® Environmental Resources Management, Inc. • Exton, Pennsylvania 19341 • (215) 524-3500

Project NEW BEDFORD **W.O. No.** F00-59 **Sheet** 3 **of** ____
Subject PRE-ENGINEERED BLDG FDN **By** WHH **Date** 4-23-91
Chkd by SPS **Date** 8-27-91

WIND LOADS

$-.70(25) = 17.5\ \#/ft^2$ (SUCTION).

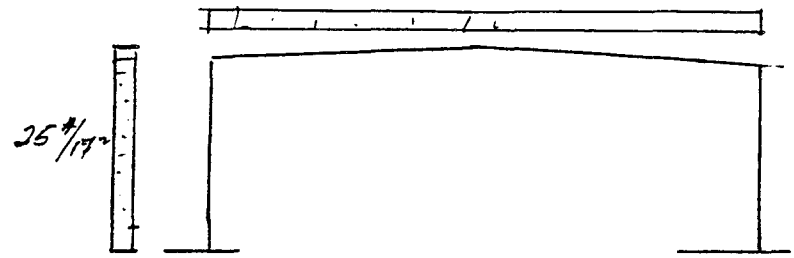

LATERAL LOADS:

CTR. COLUMNS =	$(25\ \#/ft^2)(14')(15') =$	$5250/2 =$	$2625\ \#/COL$
1ST INTER =	$(25\ \#/ft^2)(14')(17.5) =$	$6125/2 =$	$3063\ \#/COL$
EXTERIOR =	$(25)(14)(10) =$		$3500\ \#$ (TOT.)

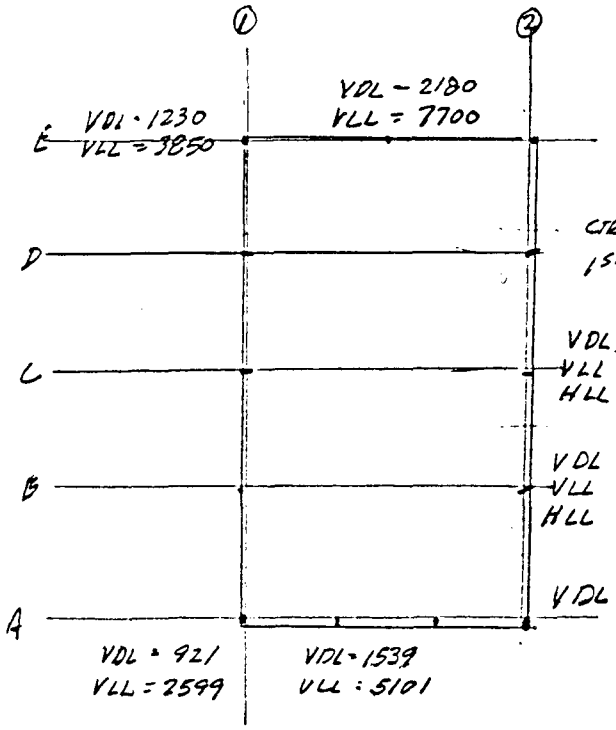

OVERTURNING:

CTR: $(25)(15)(14)^2/2 \div 40 = \pm 918$

1ST INT = $(25)(17.5)(14)^2/2 \div 40 = \pm 1072$

SUCTION:

CTR $(17.5)(15)(20)(30)/40 = 3938$

1ST INTER $(17.5)(17.5)(20)(30)/40 = 4594$

VDL = 3870
VLL = 10500 ± 918 (−3938)
HLL = 2625

VDL = 3995
VLL = 12250 ± 1072 (−4594)
HLL = 3063

The ERM Group® Environmental Resources Management, Inc. • Exton, Pennsylvania 19341 • (215) 524-3500

Project NEW BEDFORD. W.O. No. F00 - 39 Sheet 4 of
Subject PRE-ENGINEERED BLDG FDN By WHH Date 4-24-91
Chkd by SPS Date 8-22-91

FOUNDATION DESIGN

ASSUME ALLOWABLE SOIL BRG = 2000 PSF 1.0 TONS/FT²
CONCRETE = 150 PCF
REINF. = GRADE 60
FOUND. DEPTH = 42" (MIN) BELOW FINISHED GRADE

CTR COLUMN

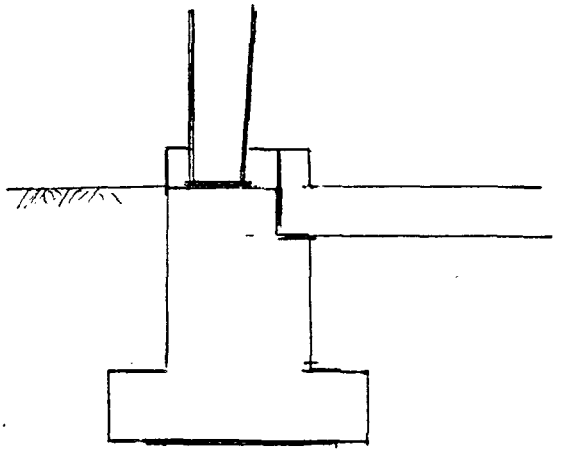

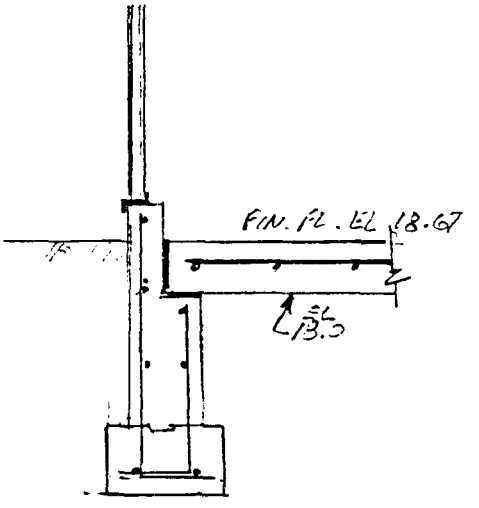

TYP. BLDG. SECTION

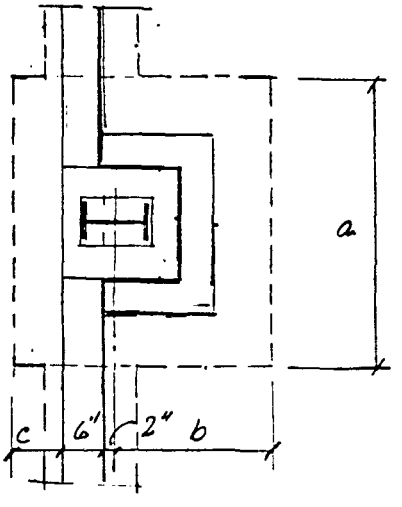

TYP. INTER COL FTG

The ERM Group — Environmental Resources Management, Inc. • Exton, Pennsylvania 19341 • (215) 524-3500

Project: NEW BEDFORD — W.O. No. F00-59 — Sheet 5 of
Subject: PRE-ENGRD BLDG. — By: WHH — Date: 4-24-91
Chkd by: SPS — Date: 8-27-91

CTR COL FTG. (COL LINE 'C')

VDL = 3,870# VLL = 10,500 ± 918 (-3938) HLL = 2625

MAX VERT. LOAD = 3870 + 10500 + 918 = 15,288#
MIN " " = 3870 - 918 - 3938 = -986#
MAX HOR. = 2625#
ALLOWABLE SOIL BRG = 2000 PSF
TRY SIZE:
COL = 15288#
TRY a = 3.5 b = 2.17 c = 0.66
A = 3.5 x 3.5 = 12.25 FT² $f_p = \frac{15288}{12.25} = 1248$ PSF

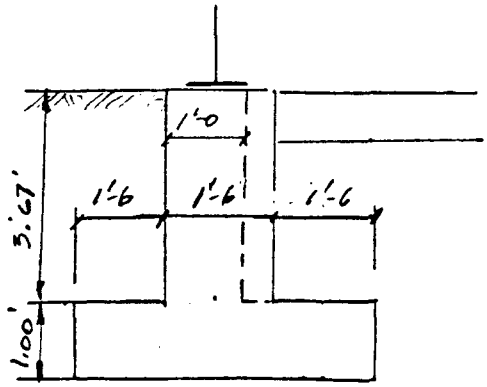

CASE 1 (NO EARTH OR SLAB.)

	KIPS.		KFT
W_1 (3.67)(4.5)(1.0)(.15)	= 2.477	x 2.50 =	6.193
W_2 (1.5)(0.5)(3.67)(.15)	= 0.413	x 1.75 =	0.723
F (4.5)²(1.0)(.15)	= 3.038	x 2.25 =	6.834
	5.928		13.750

CG = 1.918' e = -0.228

COL LD	15.3	x 2.33 =	35.649
	21.228		49.399

CG = 2.327' e = 0.077'

$S_{FTG} = \frac{1}{6}(4.5)^3 = 15.188$ FT³

$\frac{P}{A} \pm \frac{Pe}{S} = \frac{21.228}{(4.5)^2} \pm \frac{(21.228)(.077)}{15.188}$

1.048 ± 0.108 = 1.156 PSF, 0.940 PSF

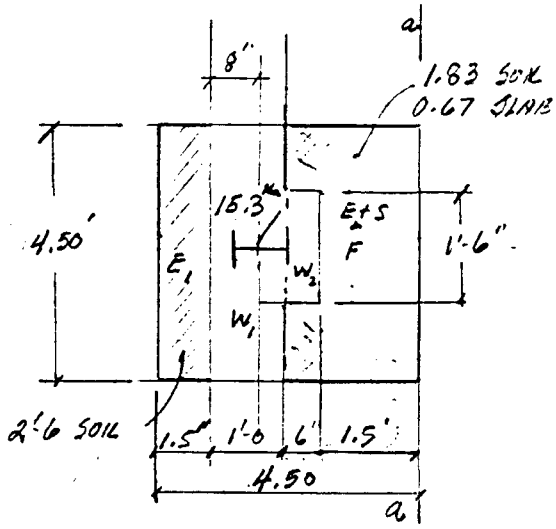

The ERM Group® Environmental Resources Management, Inc. • Exton, Pennsylvania 19341 • (215) 524-3500

Project NEW BEDFORD W.O. No. F0059 0001 Sheet 6 of
Subject PRE-ENGINEERED BLDG FDN. By WHH Date 4-24-91
Chkd by SPS Date 8-27-91

CTR COL FTG (CONT.).

CASE II (COL + EARTH & SLAB)

ΣM_{a-a}

E_1 = (3.5)(1.0)(.120)(2.5)	19.051	x	2.040	38.864
E_2 = (1.5)(3.5)(.120)(1.83)	1.050	x	3.250	3.413
S = (1.5)(3.5)(.150)(.67)	1.153	x	0.750	0.865
	0.528	x	0.750	0.396
	21.782			43.538
Earth O.T. (.035)(2.5)³/6(3.5)				− 0.319
				42.219

$CG = \frac{42.219}{21.782} = 1.938 \quad e = 0.188$

$\frac{21.782}{(3.5)^2} \pm \frac{(21.782)(.188)}{7.146} = 1.778 \pm 0.573$ 2.351 < 2.00 NG. 1.205 OK

CASE II

ΣM_{a-a}

W_1	=	2.477	x	2.50	=	6.193 ✓
W_2	=	0.413	x	1.75	=	0.722 ✓
F = (4.5)²(1.0)(.150)	=	3.038	x	2.25	=	6.836 ✓
COL	=	15.288	x	2.33	=	35.621 ✓
E_1 = (4.5)(1.5)(2.5)(.12)	=	2.025	x	4.00	=	8.100
E_2 (4.5)(2.0)(1.83)(.12)	=	1.976	x	1.00	=	1.976
S (4.5)(2.0)(.15)(.67)	=	0.905	x	1.00	=	0.905
		26.122				60.353
EARTH OT (.035)(3.5)³/6(4.50)						− 1.125
						59.228

$CG = \frac{59.228}{26.122} = 2.267 \quad e = 0.017'$

Ftg S_x = (4.5)(4.5)²/6 = 15.188 Ft³

$\frac{(26.122)}{(4.5)^2} \pm \frac{(26.122)(.017)}{15.188} = 1.290 \pm 0.029 = 1.319 < 2.00$ 1.261 OK

CASE III (CASE II + HOR. LL)

26.122 59.228

± 2.625 (3.50) ± 4594

CG = 2.443 CG = 2.091 63822/54634

e = 0.193 e = −0.159

$\frac{26.122}{(4.5)^2} \pm \frac{26.122(.193)}{15.188} = 1.290 \pm 0.332 = 1.622 < 2.0$ OK 0.958

$\frac{26.122}{(4.5)^2} \pm \frac{26.122(.159)}{15.188} = 1.290 \pm 0.273 = 1.563 < 2.0$ OK 1.017

The ERM Group — Environmental Resources Management, Inc. • Exton, Pennsylvania 19341 • (215) 524-3500

Project NEW BEDFORD **W.O. No.** F00-59 **Sheet** 7 **of** ____
Subject PRE-ENGINEERED BLDG FDN **By** WHN **Date** 5-14-91
Chkd by SPS **Date** 5-22-91

INTERMEDIATE FRAME FOUNDATIONS - COL: LINES B, C, & D

ESTIMATED LOADS:

$V_{DL} = 4.00^k$ $V_{LL\,WTS} = 12.25^k \pm 1.07^k$ (-4.59^k SUCTION)

$H_{LL} = 3.06^k$

MAX. SOIL BEARING = 1600 PSF. (SURU SHAH)

TRY 5'-0 x 5'-0

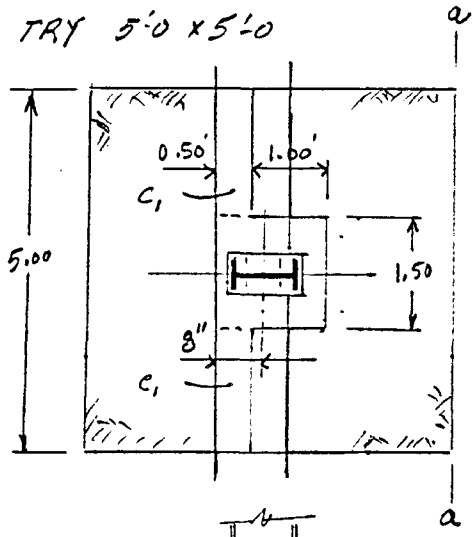

LOAD COND. 1 D.L. + EARTH.

ΣM_{a-a}

$F = 5.0 \times 5.0 \times 1.0 \times .15 =$	3.750	x 2.50	= 9.375
$P = 1.5 \times 1.5 \times 3.67 \times .15 =$	1.239	x 2.50	= 3.098
$C_1 = 3.5 \times .5 \times .5 \times .15 =$	.131	x 2.00 (3.00)	= 0.262
$S = 1.75 \times 5.0 \times .67 \times .15 =$	.879	x 0.875	= 0.769
$E_1 = 1.75 \times 5.0 \times 2.5 \times .12 =$	2.625	x 0.875	= 2.298
$E_2 = 1.75 \times 5.0 \times 3.17 \times .12 =$	3.329	x 4.125	= 13.732
	11.953^k		29.534^{kF}

CG = 2.471'

P_V (DL	+ 4.000	x 2.583	10.320
	15.953		39.854

CG = 2.498 e = 0.002

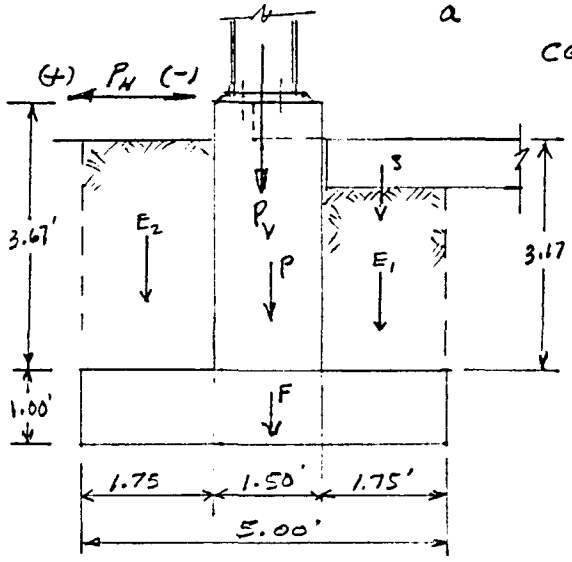

COND. 2 DL + EARTH + SNOW. LL.

P_V =	11.953		29.534
	16.250	x 2.583	41.974
	28.203		71.508

C.G = 2.535' e = 0.035'

$P/A = 28.203/25\,FT^2 = 1.128$ KSF

COND. 3 DL + EARTH + P_V(DL) + WIND)

	11.953		29.534
P_V = 4.00-1.07-4.59	-1.660	x 2.583	-4.288
	10.293		25.246
P_H = -3.06		x 4.67	= -14.290
	10.293		10.956

CG = 2.064 e = 1.436'

$S_{FTG} = \frac{bd^2}{6} = \frac{(5.0)(5.0)^2}{6} = 20.83\ FT^3$

$A = (5.0)^2 = 25\ FT^2$

$P/A \pm \frac{Pe}{S} = \frac{10.293}{25} \pm \frac{10.293(1.436)}{20.83}$

$0.412 \pm 0.710 = 1.122$, -0.298

UPLIFT MUST BE RESISTED BY ADD'L LGTH. OF FDN WALL

The ERM Group® Environmental Resources Management, Inc. • Exton, Pennsylvania 19341 • (215) 524-3500

Project NEW BEDFORD W.O. No. F00-59 Sheet 8 of
Subject PRE-ENGINEERED BLDG FDN By WNH Date 5-15-91
Chkd by SPS Date 8-27-91

INTERMEDIATE FRAME FDN (CONT)

COND 4 DL + EARTH + P_V (DL) − WIND

	11.953		29.534
P_V = 4.00 + 1.07 − 4.59 =	0.480	× 2.583 =	7.568
SUCTION 3.06		× 4.670 =	14.290
	12.433		51.392

CG = 4.134 e = 1.634'

$$\frac{12.433}{25} \pm \frac{1.634\,(12.433)}{20.83} = 0.497 \pm 0.975 \quad \begin{matrix} 1.472\ ^{k}/_{sf} \\ -.478\ ^{k}/_{sf} \end{matrix}$$

COND 5 [DL + EARTH + R_V (SNOW) + WIND]

	28.203		71.508
(NEG WIND OT + SUCT.) P_W =	− 5.660	× 2.583	− 14.620
P_H = −3.060		× 4.670	−14.290
	22.543		42.598

$$CG = \frac{42.598}{22.543} = 1.890 \quad e = 0.61'$$

$$P/A \pm Pe/S = 22.543/25 \pm \frac{22.543 \times 0.61}{20.83} = 0.902 \pm 0.660 = \begin{matrix} 1.562\ ^{k}/_{sf} \\ 0.242\ ^{k}/_{sf} \end{matrix}$$

COND 6 (DL + EARTH + SNOW − WIND)

	28.203		71.508
P_V = 1.07 − 4.59	− 3.520	× 2.583	− 9.092
SUCTION − 3.06		× 4.670	− 14.290
	24.683 ^k		48.126 ^ft

CG = 1.950 e = 0.55'

$$P/A \pm Pe/S = \frac{24.683}{25} \pm \frac{24.683 \times .55}{20.83} = 0.987 \pm 0.652 = \begin{matrix} 1.639\ ^{kSF} \\ 0.335\ ^{kSF} \end{matrix}$$

OK USE 5'-0 x 5'-0 FTG.

FTG REINF

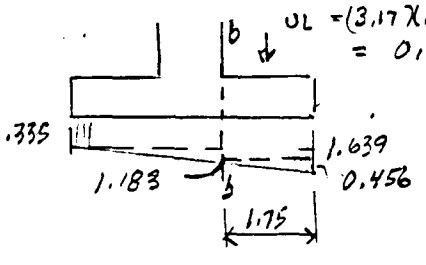

UL = (3.17)(.12) + (.67)(.15) + (1.0)(.15)
= 0.481 ^k/_FL

$$\Sigma M_{b\text{-}b} = (.631)(1.75)^2(.5) - (1.183)(1.75)^2(.5) - (.456)(1.75)^2/3$$
$$= -1.311\ ^{KF}/_{FT}$$

TOTAL M = −1.311 × 5.0' = 6.55 ^FK

$$d = 8.75'' \quad A_s = \frac{6.55}{1.76 \times 8.75} = 0.43\ in^2$$

USE 6-#4 EW BOT.
A_s = 1.20 in²

The ERM Group® Environmental Resources Management, Inc. • Exton, Pennsylvania 19341 • (215) 524-3500

Project NEW BEDFORD **W.O. No.** F0059 **Sheet** 9 **of** ____
Subject PRE-ENGINEER BLDG FDN. **By** WHH **Date** 7-29-91
Chkd by SPS **Date** 8-27-91

COL. FTG. (COL. LINES B & D)

V_{DL} = 3995# V_{LL} = 1250# ± 1072# (-4594)# VH = 3063#
= 4.00"

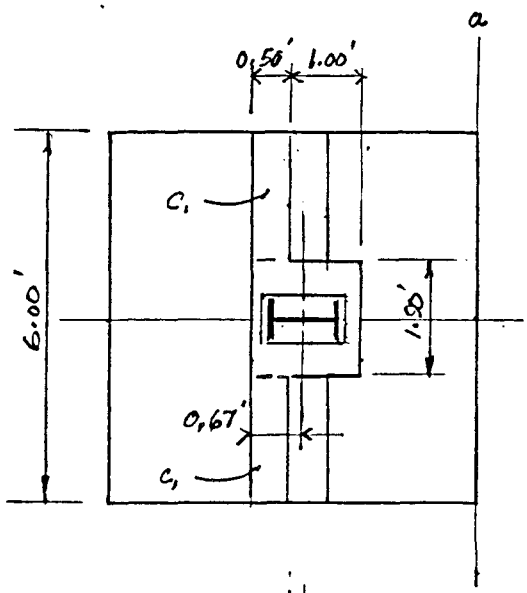

MAX SOIL LOAD = 1600 PSF
TRY 5'-0 x 6'-0 W FTG.

LOAD COND 1. (DL + EARTH.)

ΣM_{a-a}.

F =	5.0 x 6.0 x 1.0 x .15 =	4.50 x 2.50' =	11.25
P =	1.5 x 1.5 x 3.67 x .15 =	1.24 x 2.50' =	3.10
G_1 =	4.5 x .5 x .5 x .15 =	0.17 x 3.00' =	0.51
S =	1.75 x 6.0 x .67 x .15 =	1.06 x 0.88' =	0.93
E_1 =	6.00 x 2.50 x 1.75 x .12 =	3.15 x 0.88' =	2.77
E_2 =	6.00 x 3.17 x 1.75 x .12 =	3.99 x 4.13' =	16.48
		14.11	34.11

CG = 34.11/14.11 = 2.42'

P_V =		4.00 x 2.58	10.32
		18.11"	44.43

CG = 2.453' e = 0.047'

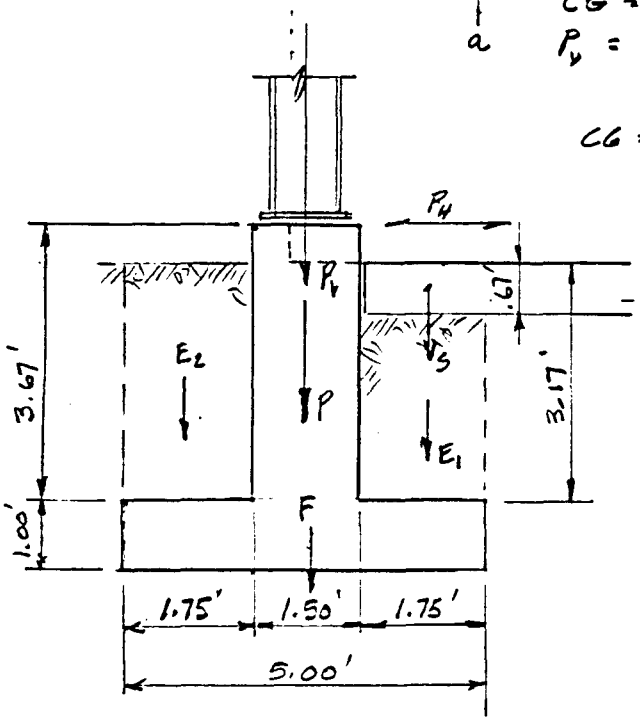

The ERM Group® Environmental Resources Management, Inc. • Exton, Pennsylvania 19341 • (215) 524-3500

Project NEW BEDFORD W.O. No. F00-59 Sheet 10 of
Subject PRE-ENGINEERED BLDG FDN By WHH Date 7-29-91
Chkd by SPS Date 8-22-91

CORNER COLUMN FOOTINGS - COL LINES A & E

$V_{DL} = 1230 \quad V_{LL} = 3860$

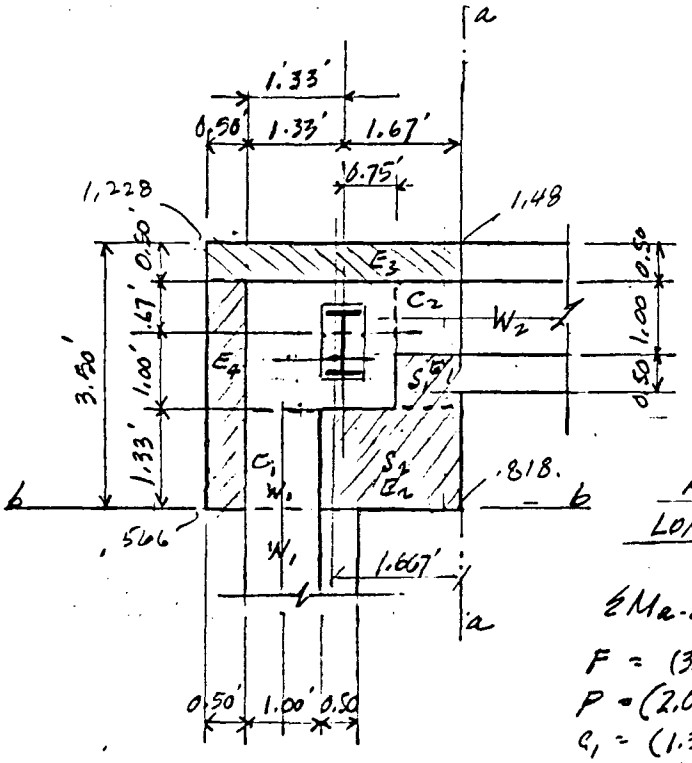

ALLOW SOIL BRG = 1600 PSF
LOAD COND #1 (DL + EARTH)

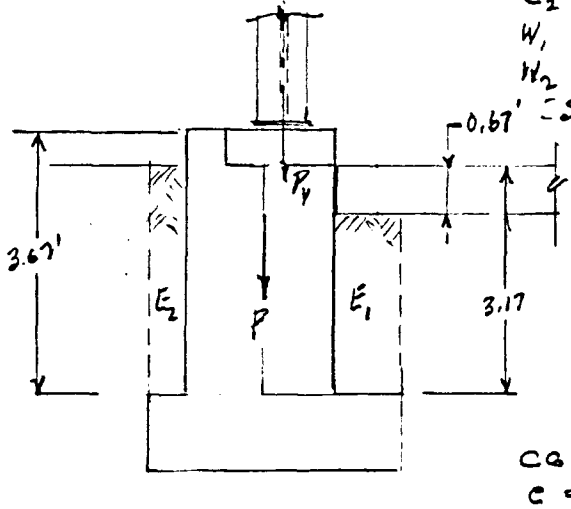

ΣM_{a-a}

$F = (3.5)(3.5)(1.0)(.15)$	$= 1.84$	$\times 1.75' =$	3.22
$P = (2.08)(1.67)(3.67)(.15)$	$= 1.91$	$\times 1.67' =$	3.19
$C_1 = (1.33)(.5)^2(.15)$	$= 0.05$	$\times 2.75 =$	0.14
$C_2 = (0.92)(.5)^2(.15)$	$= 0.03$	$\times 0.46 =$	0.02
$W_1 = (1.33)(1.0)(3.17)(.15)$	$= 0.63$	$\times 2.50 =$	1.58
$W_2 = (0.92)(1.0)(3.17)(.15)$	$= 0.44$	$\times 0.46 =$	0.20
$S_1 = (0.67)(.92)(.67)(.15)$	$= 0.06$	$\times 0.46 =$	0.03
$S_2 (1.33)(2.0)(.67)(.15)$	$= .27$	$\times 1.00 =$	0.27
$E_1 (.67)(.92)(2.5)(.12)$	$= .18$	$\times 0.46 =$	0.09
$E_2 (1.33)(2.0)(2.5)(.12)$	$= .80$	$\times 1.00 =$	0.80
$E_3 (3.5)(.5)(3.17)(.12)$	$= .67$	$\times 1.75 =$	1.16
$E_4 (3.0)(.5)(3.17)(.12)$	$= .57$	$\times 3.25 =$	1.85
	7.45*		12.55
P	1.23	$\times 1.67 =$	2.05
	8.68		14.60

$CG = 14.60/8.68 = 1.68'$

$e = 0.07 \qquad P/A = \frac{8.68}{(3.5)^2} = 0.71$ KSF.

The ERM Group® Environmental Resources Management, Inc. • Exton, Pennsylvania 19341 • (215) 524-3500

Project NEW BEDFORD W.O. No. F00-59 Sheet 11 of
Subject PRE-ENGR BLDG FDN By WHH Date 7-29-91
Chkd by SPS Date 8-27-91

FTG COL'S A & E (CONT.)

COND 2 (DL + EARTH + SNOW LL)

$\Sigma M_{a-a} / \Sigma M_{b-b}$

		WGT	x	Mx	y	My
F	$(3.5)^2(1.0)(.15) =$	1.84	1.75	3.22	1.75	3.22
P	$(2.08)(1.67)(3.67)(.15) =$	1.91	1.67	3.19	2.33	4.45
C_1	$(1.33)(.50)^2(.15) =$	0.05	2.75	0.14	0.67	0.03
C_2	$(0.92)(.5)^2(.15) =$	0.03	0.46	0.01	2.75	0.08
W_1	$(1.33)(1.0)(3.17)(.15) =$	0.63	2.50	1.58	0.67	0.42
W_2	$(0.92)(1.0)(3.17)(.15) =$	0.47	0.46	0.20	2.50	1.10
S_1	$(0.67)(.92)(.67)(.15) =$	0.06	0.46	0.03	1.67	0.10
S_2	$(1.33)(2.0)(.67)(.15) =$	0.27	1.00	0.27	0.67	0.18
E_1	$(0.67)(.92)(2.5)(.12) =$	0.18	0.46	0.08	1.67	0.30
E_2	$(1.33)(2.6)(2.5)(.12) =$	0.80	1.00	0.80	0.67	0.54
E_3	$(3.5)(.5)(3.17)(.12) =$	0.67	1.75	1.17	3.25	2.18
E_4	$(3.0)(.5)(3.17)(.12) =$	0.57	3.25	1.85	1.50	0.86
		7.45 K		12.54		13.46
$P_{V_{DL}} =$		1.23	1.67	2.05	2.33	2.87
		8.68 K <		14.59 <		16.33 <

$e_x = 1.75 - 14.59/8.68 = 0.069'$ $e_y = 1.75 - 16.33/8.68 = -0.131'$

COND 3 $(DL + E + P_{V_{DL}})$

	+ 3.85	1.67	6.43	2.33	8.97
	12.53 <		21.02 <		25.30 <

$e_x = 1.75 - 21.02/12.53 = 0.072'$ $e_y = 1.75 - \frac{25.30}{12.53} = -0.189'$

$S_{FTG} = (3.5)^3/6 = 7.146\ ft^3$

$$\frac{P}{A} \pm \frac{Pe_x}{S_x} \pm \frac{Pe_y}{S_y} = \frac{12.53}{(3.5)^2} \pm \frac{(12.53)(.072)}{7.146} \pm \frac{(12.53)(.189)}{7.146}$$

$1.023 \pm 0.126 \pm 0.331 =$ 1.48 KSF
1.228
0.818
0.566

REINFORCING

$W = 1.48 - .67(.15) - (2.50)(.12) = 1.08$ KSF

$M = WL^2/2 = (1.08)(1.50)^2/2 = 1.215$ $d = 12 - 3 - .5 - .25 = 8.25"$

$A_s = \frac{1.215}{1.76 \times 8.25} = 0.08\ in^2$ # 4 @ 12" E.W (BOT)

The ERM Group® Environmental Resources Management, Inc. • Exton, Pennsylvania 19341 • (215) 524-3500

Project NEW BEDFORD W.O. No. F00 59 Sheet 12 of
Subject PRE-ENGINEER BLDG. By WHH Date 7-29-91
Chkd by SPS Date 8-27-91

INTERMEDIATE COL. FTG. (CONT.)

CHECK MAX UPLIFT COND.

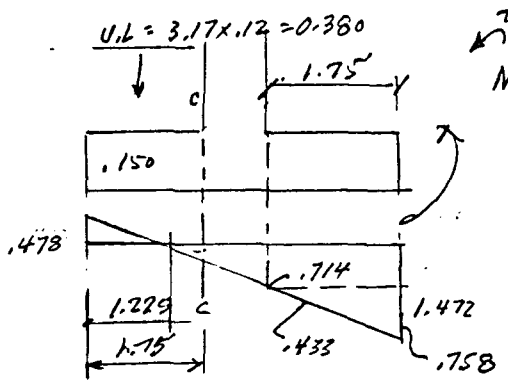

$M_{c.c} = (\overbrace{.380 + .150}^{.53})(1.75)^2/2 - (.478)(1.225)(.5)(1.342)$

$0.812 - 0.196 = +0.616^{KF}$

TOP STEEL $M_T = .616(5.0) = 3.08^{FK}$

$A_s = \frac{.616}{1.76 \times 8.75} = .04 \text{ in}^2$. NO TOP REINF

$M = (.714)(1.75)^2(.5) + (.758)(1.75)^2/3 - (.530)(1.75)^2(.5) = 1.06^{KF}/ft$

$d = 8.5$

$A_s = \frac{1.06}{1.76 \times 8.5} = 0.07$ #4 @12" EW BOTT.

The ERM Group — Environmental Resources Management, Inc. • Exton, Pennsylvania 19341 • (215) 524-3500

Project NEW BEDFORD **W.O. No.** F0059 0001 **Sheet** 1 **of** 1
Subject STL FLOCC. TANK **By** WNH **Date** 5-13-91
WALKWAY & MIXER SUPPORT **Chkd by** SPS **Date** 8-22-91

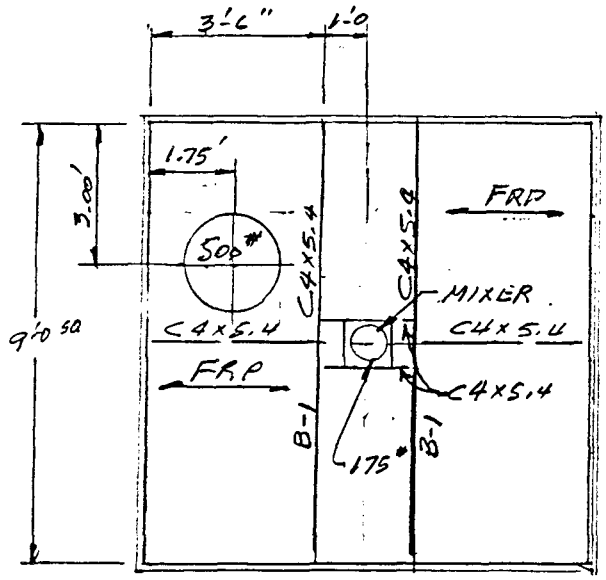

MIXER WGT. = 300# (INCL SHAFT.)
L.L = 20 PSF
FRP-LID = 2.4 PSF.

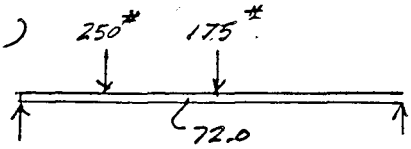

BEAM B-1

COVER (LID) = (22.4)(3.5/2 + 1.0) = 61.6 PLF
BEAM = 10.4
DL + LL = 72.0 PLF

R_1 (72.0)(9.0)(.5) + 175/2 + 500×6.0/9.0 = 745#
R_2 = (72.0)(9.0)(.5) + 175/2 + 500×3.0/9.0 = 578#
x = 3.403' FROM R_1
M = (745)(3.403) − (500)(.403) − (72.0)(3.403)²/2 = 1917 FT-lbs

TRY C4 X 5.4 S_x = 1.93 I = 3.85 d/A_f = 8.52

f_b = M/S = (1917×12)/1.93 = 11,918 psi

BRACE AT MID-POINT

F_b = 1000/(8.52×4.5) ≥ 24000 psi

w ≈ 8M/L² = (8)(1917)/(9)² = 189 #/FT

Δ ≈ (5)(189)(9.0)⁴(1728)/(384)(29000)(3.85) = 0.25" 1/432 OK

USE C4 x 5.4 BEAMS & BRACES

The ERM Group® Environmental Resources Management, Inc. • Exton, Pennsylvania 19341 • (215) 524-3500

Project NEW BEDFORD **W.O. No.** F00590001 **Sheet** 1 **of** 3
Subject PIPE SUPPORT (REVISED) **By** WJH **Date** 8-23-91
Chkd by SPS **Date** 8-27-91

SCH 80 { 6" 5.41 #/, ID = 5.761" Liq = 11.40 #/,
2" 0.95 #/, ID = 1.939" " = 1.29 #/,

SCH 40 6" 3.61 #/,
10" 7.91 #/,

4" SNOW @ 30 #/FT³

10" PIPE = (0.83)(.33)(30) = 8 #/FT
6" PIPE = (0.50)(.33)(30) = 5 #/FT

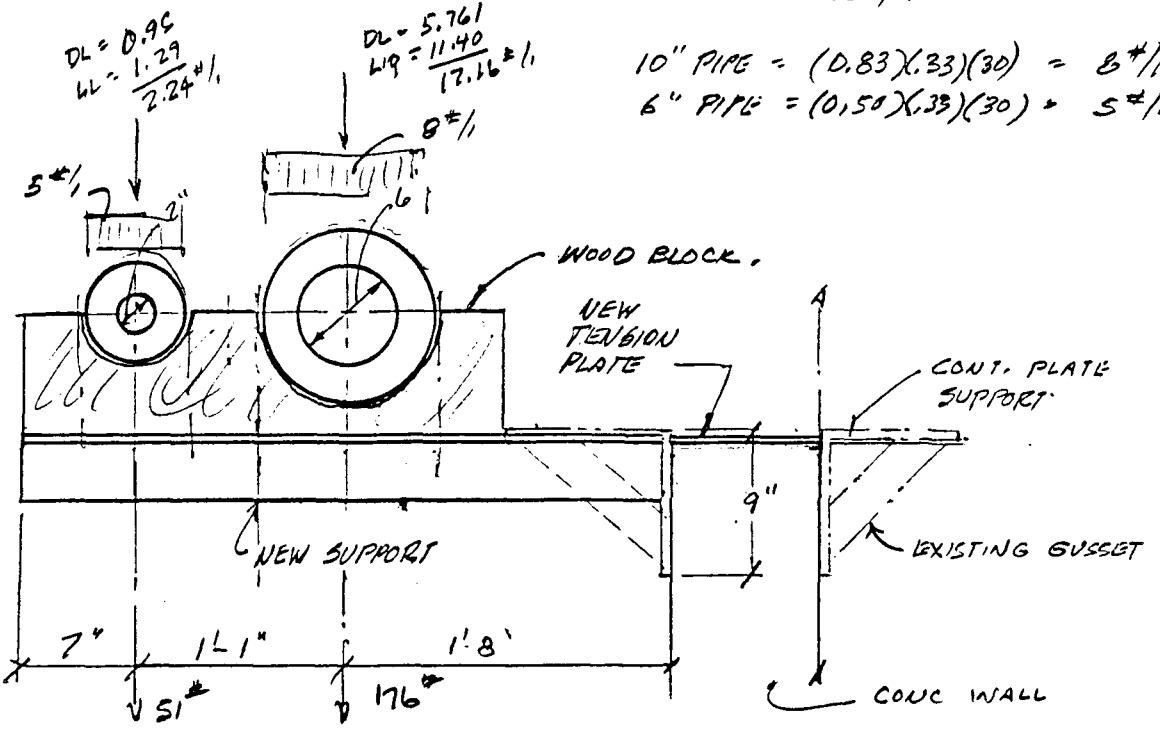

SUPPORT SPACING = 7.0'

6" CARRIER PIPE = (17.16 + 8.0)(7.0) = 176.#
2" " " = (2.24 + 5.0)(7.0) = 51.#

WOOD BLK = 3"x8"x2'-6" w = 40 PCF
WGT BLK = (.25)(.67)(2.5)(40) 16.8#

TRY L 4x3x¼ (5.8 #/,) I_x = 2.77 S_x = 1.00 r_x = 1.28

$\Sigma M_{A-A} = 0$

P_6 =	176# x	1.67'	=	294 FT-lbs
P_2 =	51# x	2.75'	=	140.
L =	19# x	1.67'	=	32.
BLK =	17# x	2.08'	=	35.
				501. FT-lbs = 6012 in-lbs

$f_b = M/S = \frac{6012}{1.0} = 6012$ psi

K = 2.1 KL/r = (2.1)(3.33)(12)/1.28 = 65.6 F_a > 16.000 L4x3x¼ OK.

The ERM Group® Environmental Resources Management, Inc. • Exton, Pennsylvania 19341 • (215) 524-3500

Project NEW BEDFORD **W.O. No.** F0059 0001 **Sheet** 2 **of** 3
Subject PIPE SUPPORT (REVISED) **By** WHH **Date** 8-23-91
Chkd by SPS **Date** 8-27-91

CHECK TENSION & COMPRESSION

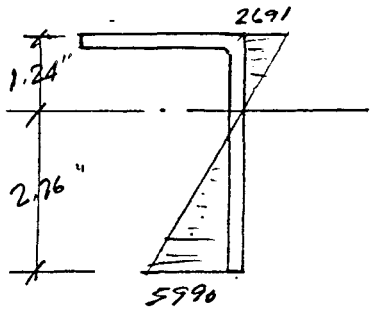

$M = 6012$ in-lbs

$\sigma_{TEN} = \frac{Mc_t}{I} = \frac{(6012)(1.24)}{2.77} = 2691$ psi

$\sigma_{COMP} = \frac{Mc_c}{I} = \frac{(6012)(2.76)}{2.77} = 5990$ psi

TOTAL TENSION $= (2691)(1.24)(.5) = 1668$ #

" COMPR $= (2691)(2.76)(.5) = 3714$ #

TENSION PLATE

$A_{REQD} = \frac{1668^{\#} \times 2.0\ (F.S.)}{20{,}000\ psi} = 0.1668\ in^2$

$1/4" \times 3.00"$ PLATE $= 0.75\ in^2$

$P_{ALLOW} = 0.75\ (20{,}000) = 15{,}000$ lbs $> 1668 \times 2$ ok.

EXISTING PLATE

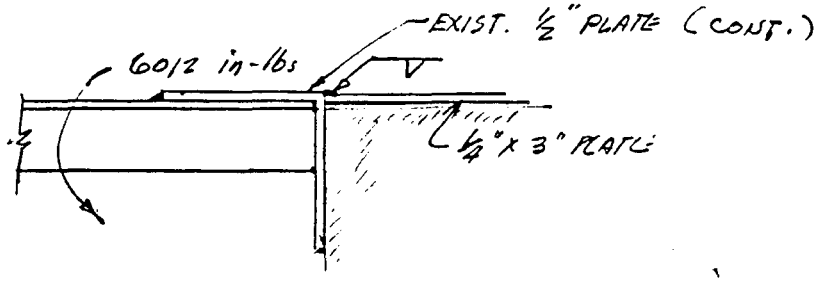

LATERAL LOAD

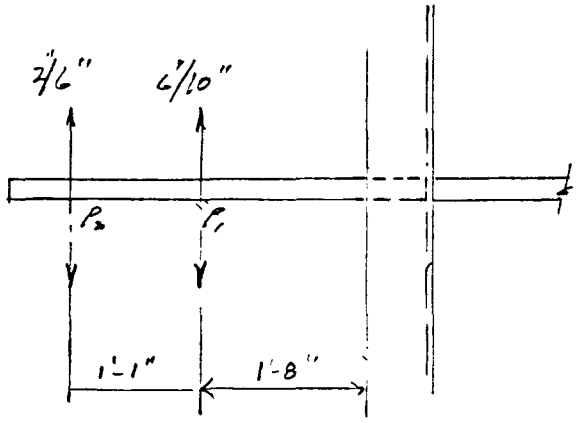

$L4 \times 3 \times 1/4$ $S_y = 0.599\ in^3$

$M = f_s S_y = 20{,}000 \times .599 = 11{,}980$ in-lbs.

$P_1(20) + P_2(33) = 11{,}980$

$P_2 = 6/10\ P_1 = .6\ P_1$

$\therefore 20P_1 + .6P_1(33) = 11980$

$20P_1 + 19.8P_1 = 11980$

$39P_1 = 11980$

$P_1 = 301$ lbs.

TIGHTEN BOLTS HANDTIGHT ONLY.

The ERM Group® Environmental Resources Management, Inc. • Exton, Pennsylvania 19341 • (215) 524-3500

Project NEW BEDFORD **W.O. No.** F00590001 **Sheet** 3 **of** 3
Subject PIPE SUPPORTS (REVISED) **By** WHK **Date** 8-23-91
Chkd by SPS **Date** 8-27-91

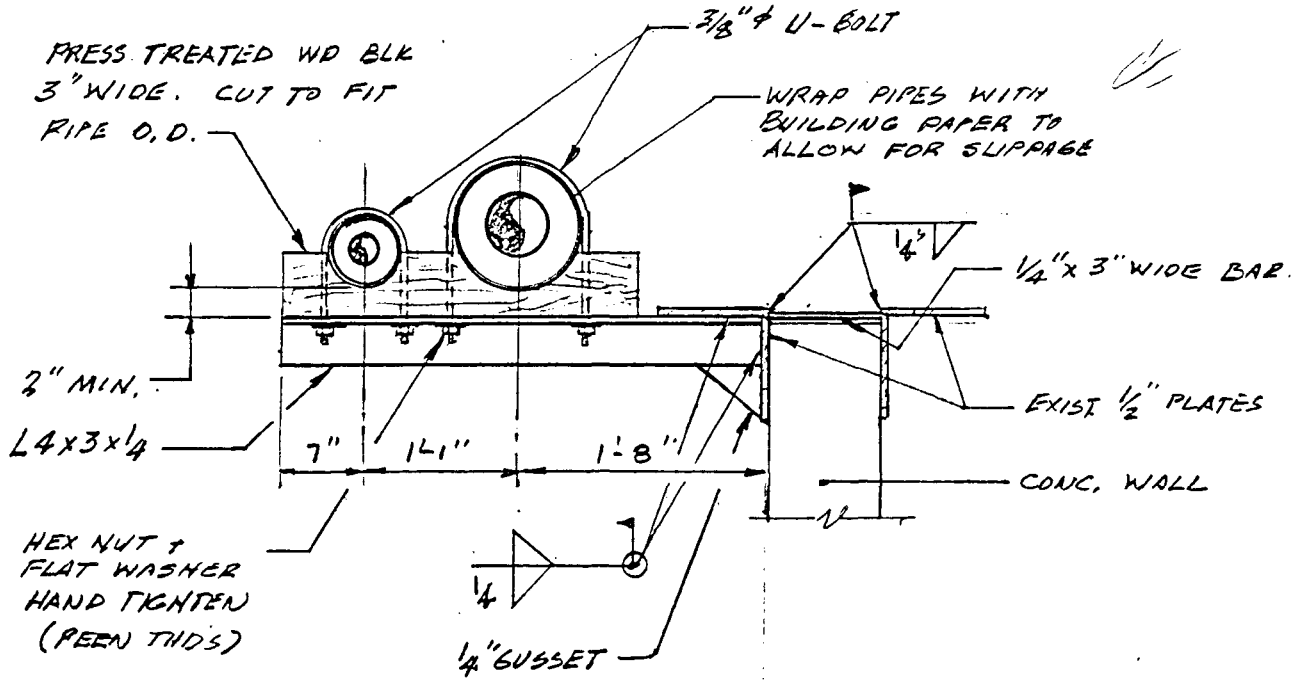

The ERM Group® Environmental Resources Management, Inc. • Exton, Pennsylvania 19341 • (215) 524-3500

Project NEW BEDFORD W.O. No. F59001 Sheet 1 of 1
Subject PIPE SUPPORT ON CELL WALL By WHH Date 7-26-91
Chkd by SPS Date 8-27-91

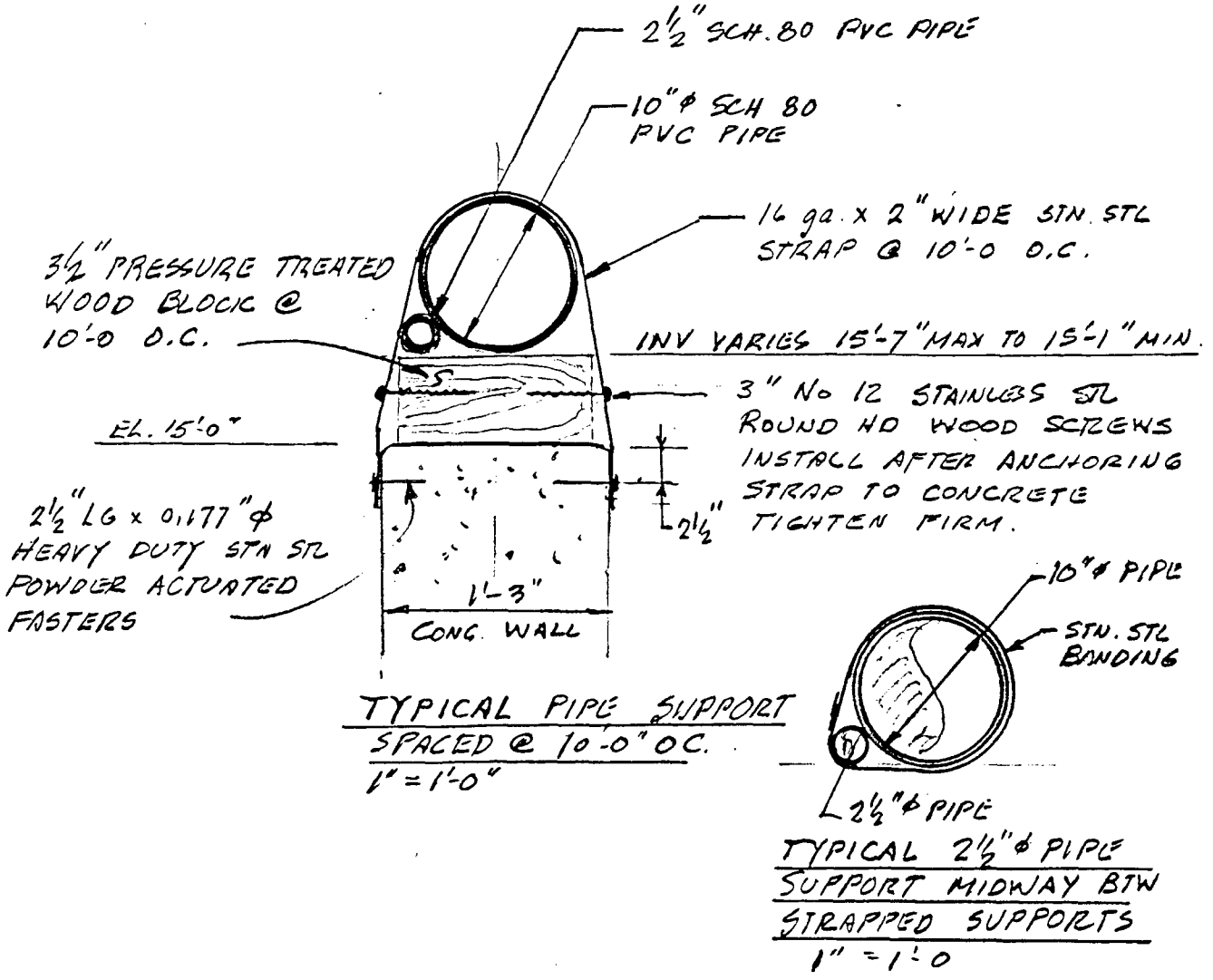

TYPICAL PIPE SUPPORT SPACED @ 10'-0" OC.
1" = 1'-0"

TYPICAL 2½"ϕ PIPE SUPPORT MIDWAY BTW STRAPPED SUPPORTS
1" = 1'-0

The ERM Group® Environmental Resources Management, Inc. • Exton, Pennsylvania 19341 • (215) 524-3600

Project _____ W.O. No. _____ Sheet ____ of ____
Subject _____ By _____ Date _____
Chkd by _____ Date _____

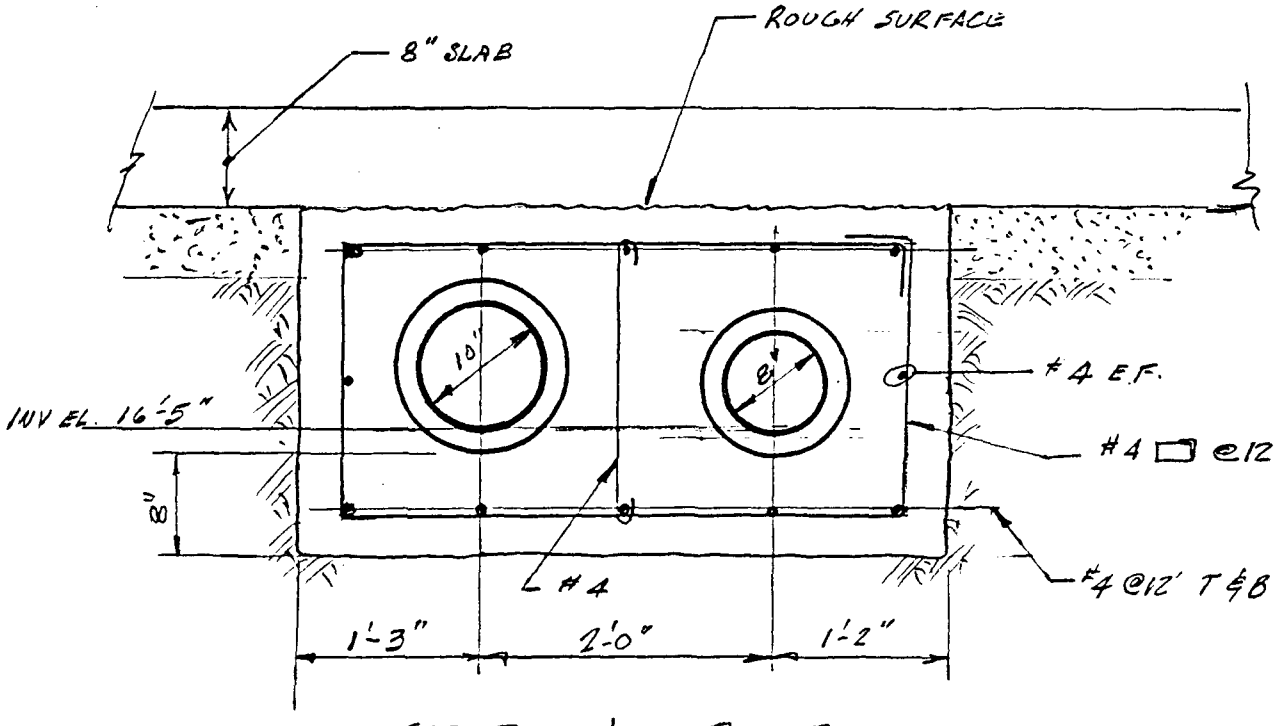

SECTION B - B
3/4" = 1'-0

The ERM Group® Environmental Resources Management, Inc. • Exton, Pennsylvania 19341 • (215) 524-3500

Project NEW BEDFORD W.O. No. F00590001 Sheet 1 of 1
Subject WALL CLOSURE DETAIL By WHH Date 8-9-91
Chkd by SPS Date 8-27-91

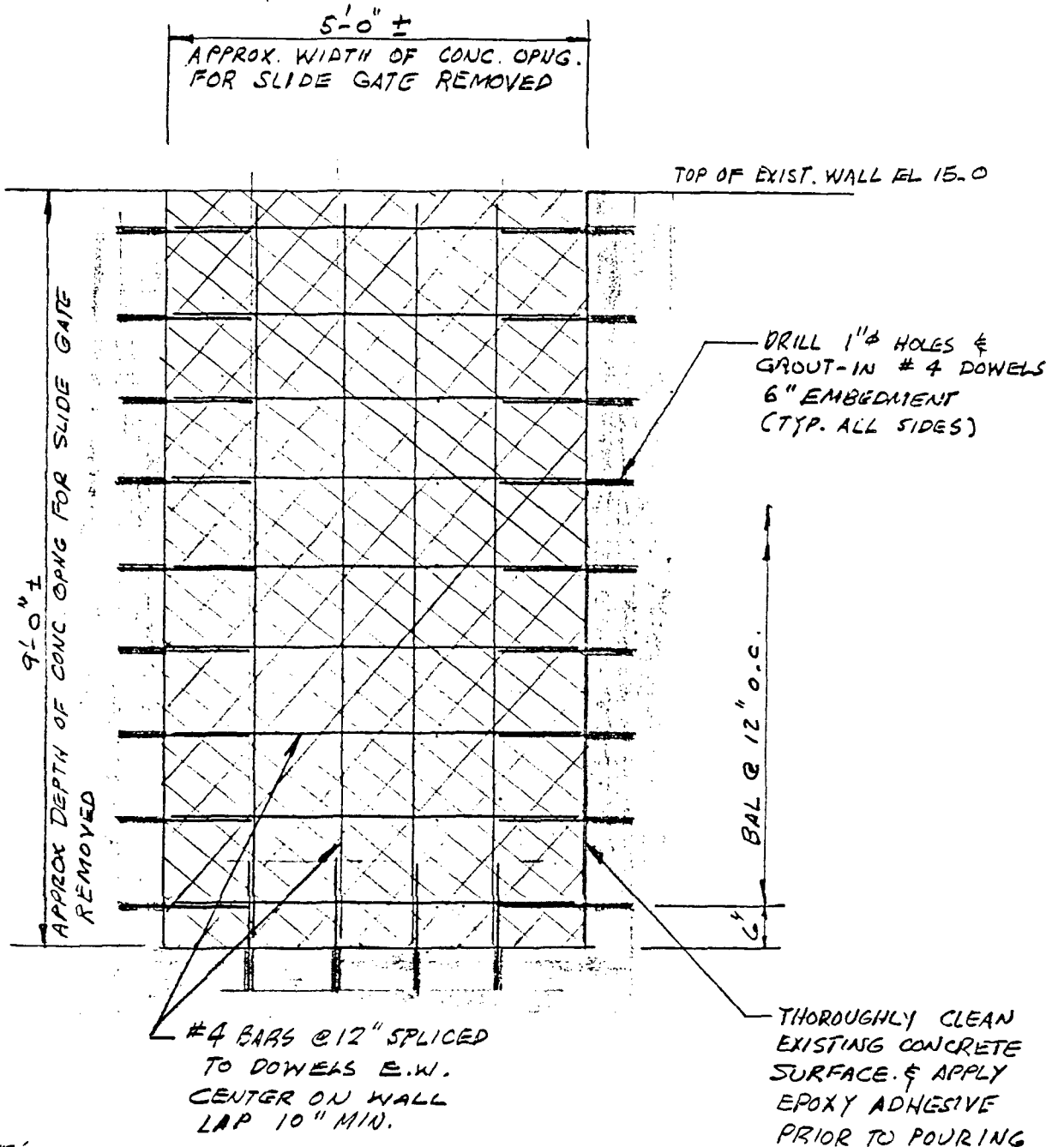

NOTE:
CROSS HATCH AREA REPRESENTS NEW CONCRETE

CONCRETE CLOSURE FOR WALL OPENING AT REMOVED 3' x 5' ALUMINUM SLIDE GATE

SCALE: 1/2" = 1'-0"

APPENDIX G

CALCULATIONS SUPPORTING AIR EMISSIONS OF PCBS DETERMINATIONS

Ambient PCB Levels in Air

Preliminary Results from the Laboratory Assessment of PCB Volatilization for New Bedford Harbor Hotspot Sediment

Assessment of PCB Emissions
New Bedford Harbor, Mew Bedford, MA

Metals Emissions Computer Runs

Short-Term Action Level Calculations

AMBIENT PCB LEVELS IN AIR

The ERM Group

Interoffice Correspondence

To: **John Gallagher**

Date: **23 August 1991**

From: **John Shrock**
John Haasbeek
Robin Streeter

Subject: **New Bedford Harbor Ambient PCB Levels in Air**

PCB levels of up to 471 ng/m^3 were previously monitored in the vicinity of the "hot spot" by NUS (Final Air Monitoring Report, July 1990). While these levels warrant concern, they should not be relied on as a predictor of the levels that might occur during the dredging and pumping operations proposed for the New Bedford Harbor cleanup. The monitored values occurred when the tides were low, thereby exposing the heavily contaminated mudflats. There are several explanations why high ambient concentrations were reported during the monitoring, including the following:

- The mechanical action of the waves between tides may act to disturb the sediments, thereby increasing volatilization.
- Aerosols may be formed as a result of the wave action, serving as another mechanism (in addition to volatilization) to increase PCB emissions.
- The area of contamination directly exposed to the air during low tide may be very large. In fact, this area would encompass more than just the "hot spot" area.
- Since the measurements were made over a six hour period, the mudflats were also likely to have been exposed during some portion of the monitoring period considered to be at "high tide." Thus, it is likely that even those measurements made at "high tide" do not represent the concentrations which would occur as a result of the remedial activities.

The CDF is designed to provide a continuous water cover for the sediment. PCB concentrations in the water will be less than 100 ppb. Consequently, the potential for emissions is low. This is a very different situation than having a large area of sediments with very high levels of PCBs - up to 100,000 ppm - exposed directly to the air, such as was the case when the air monitoring was performed. For this reason, we feel that the ambient air concentrations measured during the monitoring activities are not

representative of the air concentrations likely to occur as a result of the proposed dredging and CDF operations.

PRELIMINARY RESULTS FROM THE LABORATORY ASSESSMENT OF PCB VOLATILIZATION FOR NEW BEDFORD HARBOR HOTSPOT SEDIMENT

DEPARTMENT OF THE ARMY
WATERWAYS EXPERIMENT STATION, CORPS OF ENGINEERS
3909 HALLS FERRY ROAD
VICKSBURG, MISSISSIPPI 39180-6199

REPLY TO
ATTENTION OF

CEWES-EE-S

10 July 1991

MEMORANDUM FOR Mr. Mark Otis, U.S. Army Engineer Division, New England, ATTN: CENED-PD-L, 424 Trapelo Road, Waltham, MA 02254-9149

SUBJECT: Preliminary Results from the Laboratory Assessment of PCB Volatilization for New Bedford Harbor Hotspot Sediment

Introduction

1. A confined disposal facility (CDF) is a diked area for gravity separation and storage of dredged material solids. When contaminated dredged material is placed in a CDF, the potential exists for volatile organic chemicals associated with the sediment to be released to the air. Sediments from the New Bedford Harbor Superfund Site, New Bedford, MA, contain significant amounts of polychlorinated biphenyls (PCBs), some of which may be released to the air from slurries disposed in the CDF.

2. In a memorandum dated 21 May 1991 Mr. Tommy Myers described the theoretical calculations for estimating the volatile losses for Aroclors 1242 and 1254. These estimates were based on the equations of Thibodeaux, which assume a constant concentration of PCB in the water. The laboratory studies were designed to test the accuracy of this assumption.

3. This memorandum summarizes the laboratory results obtained to date from measurement of volatile emissions of [^{14}C] PCB 153 from New Bedford Harbor sediment. The information contained herein should be regarded as preliminary and subject to change pending final results for the study.

Methods

4. The experimental apparatus (volatilization chambers) are illustrated in Figure 1. The lower portion of the apparatus consisted of a 250-ml glass beaker without a pour spout. The top of the chamber was a number 13, teflon covered, rubber stopper fitted with a polyurethane foam (PUF) plug for trapping volatilized PCB and a syringe for sampling the slurry. Surface area of the chamber was 0.00353 square meters. Volume of the chamber above the slurry was approximately 90 cubic centimeters (cc). The carrier gas was air with a flow rate of 14 cc/min.

5. The experimental design for this study accommodated the monitoring of volatile PCB emissions for three different slurry concentrations (10%, 5%, and 1% sediment by weight) and three different turbulence levels. Initial studies were conducted with radioisotope amended sediment which allowed frequent sampling for PCB concentrations in volatile and aqueous phases. The initial study is being followed by direct monitoring of volatilization using the same experimental apparatus for the hot spot sediment.

6. Sediment for the radioisotope portion of this study was low- level New Bedford sediment containing approximately 30 mg/Kg total PCB. Use of a radiotracer allowed quick and economical determination of several test conditions for use in the hot spot study. Less contaminated material was used to avoid creating a mixed waste in the laboratory (high PCB and radioactive). The radioisotope was uniformly ring labeled [^{14}C]PCB 153 (2,2',4,4',5,5'-hexachlorobiphenyl), hereafter referred to as PCB 153. To amend the sediment, sufficient PCB 153 in hexane to obtain a labelled concentration of 10 mg/Kg sediment dry weight was evenly coated onto the lower one third of the beaker as the hexane evaporated to dryness. To each of the beakers 150 mls of 10% New Bedford Harbor sediment slurry was then added. Stir-bars of cross sectional area 2.4 cm^2 (1 inch), 4.6 cm^2 (1.5 inch), and 6.5 cm^2 (2 inch) were introduced to the beakers to simulate wind induced mixing. Beakers were sealed, placed on constant speed magnetic stirrers set at 180 rpm, and allowed to stir with no air flow for 24 hours. This allowed sufficient time for the PCB 153 on the container walls to move to the sediment and reach steady state concentrations in the water (Brannon et al. 1989). At the end of this equilibration period, air flow was initiated, and PUF plugs were sampled at hourly intervals for 6 hours in the 10% slurry units. PCB 153 trapped in the PUF plugs was extracted by drawing 5-ml aliquots of hexane into the syringe holding the plug, allowing the hexane to stand for 15 sec, then slowly eluting the hexane. Aliquots of hexane from three successive extractions were pooled and 5 ml was added to 15 ml of Ultima Gold liquid scintillation (LS) cocktail (Packard Instruments, Meriden CT) and counted for 10 min in a Packard 2500 TR Liquid Scintillation Analyzer using the external standard, channels ratio method. Each time PUF plugs were removed, water samples were obtained by drawing 2 mls of slurry through the water sampling port, transferring it to a 25-ml glass centrifuge tube and centrifuging the slurry at 7,400 RCF (12,000 rpm) for one hour at 20 °C. This centrifugation time and speed results in removal from solution of particulates larger than 0.01 um.

7. The experiments with the 5% and 1% slurry concentrations were conducted in the same manner as with the 10% slurry except that the sampling times were changed to 2, 4, 6, and 24 hrs to allow longer PCB 153 accumulation times for the PUF plugs because of the lower total mass of radioisotopes in the units.

Results and Discussion

8. Water concentrations and volatile losses of PCB 153 from the 10% slurry are summarized in Table 1. Significant differences in volatile losses and water concentrations existed between the units with a 1-inch stirbar and units with 1.5- and 2-inch stirbars. Volatile loss and water concentration data for the 10% slurry and 1- and 1.5-inch stirbars are presented in Figures 2 and 3, respectively. High variability in volatile losses was observed in units with

the two inch stirbars. No significant differences were observed for volatile losses or water concentrations between sampling times in a treatment. Water concentrations did not decrease as volatiles were lost from the system, indicating that desorption from sediment solids rapidly replenished water column PCB 153 lost by volatilization. Therefore, sediment/water desorption kinetics was not a limiting factor for volatilization. This supports the premises of the equations of Thibodeaux used by Myers in his volatilization calculations, i.e., that water concentrations are controlled by solubility or equilibrium partitioning. Desorption kinetics do not limit the extent of volatilization by controlling water concentrations.

9. Water concentrations and volatile losses of PCB 153 from the 5% slurry are summarized in Table 2. No significant differences existed over time for any of the 5% slurry:stirbar combinations. The increased variability noted in the 5% slurry experiments was due to low isotope counts because of the 50% decrease in the amount of radioactivity in each experimental unit (7.5 g of sediment versus 15 g of sediment with a loading of 10 ug/g).

10. Water concentrations and volatile losses of PCB 153 from the 1% slurry are summarized in Table 3. No significant differences existed over time for any of the 1% slurry:stirbar combinations. The increased variability noted in the 5% slurry experiments continued for the 1% slurry experiments because isotope counts decreased to 10% of that in the 10% slurry experiments.

11. Six hour data from the radioisotope portion of the study are summarized in Tables 4 and 5. Table 4 presents average water concentrations and volatile losses for each slurry concentration:stirbar combination. This was possible because of the lack of significant differences between sampling times for all slurry concentration:stirbar combinations. These data show that average volatile losses from the 10% slurry concentration were significantly higher for the 1.5- and 2-inch stirbars than for the 1-inch stirbar. Similar differences in PCB 153 water concentrations were observed. Cumulative releases for the 10% slurry concentrations also parallel results for average volatile loss rates. No significant differences were observed for any of the 5% or 1% slurry concentration:stirbar combinations.

12. Volatile emission rates reported in Table 4 for the laboratory evaluation are substantially lower than those estimates reported previously based on theoretical equations for field conditions and New Bedford hot spot sediment characteristics. Reasons why the experimental rates are lower than the previously estimated rates are:

- Previous estimates were for Aroclors (mixtures of PCB congeners) whereas the experimental data are for a single PCB congener. Aroclor mass emission would, therefore, be higher than the mass emission of a single PCB congener.

- Previous calculations assumed PCB to be present at the Aroclor solubility limit. The experimental PCB congener concentrations were below the Aroclor solubility limit.

- The experimental apparatus simulates quiescent atmosphere conditions when there is little wind. In the experimental apparatus, air speed over the water surface was probably low enough for a stagnant boundary layer on the air side of the interface to develop. Such a boundary layer would inhibit volatile emissions. The previous calculations for the theoretical models assumed a wind speed of 10.9 mph.

13. As shown in the following calculation, theoretical estimation is in good agreement with the experimental data if the appropriate wind speed is used. The basic model equation for volatile emissions from a water surface is as follows:

$$n_A = {}^1K'_{A2} \left(\rho_{A2} - \rho^{**}_{A2}\right) \tag{1}$$

where

n_A = flux of chemical A through air-water interface, mg/cm² hr.

${}^1K'_{A2}$ = overall liquid phase mass-transfer coefficient, concentration driving force, cm/hr

ρ_{A2} = dissolved concentration of chemical A, mg/cm³

ρ^{**}_{A2} = hypothetical concentration of chemical A in water for background concentration of chemical A in air, mg/cm³.

For a background concentration in air of zero, ρ^{**}_{A2} is also equal to zero, so that equation 1 becomes

$$n_A = {}^1K'_{A2}\, \rho_{A2} \tag{2}$$

The overall liquid-phase mass-transfer coefficient, ${}^1K'_{A2}$, depends on wind

speed and the molecular diffusivity of chemical A in water and can be estimated with the LST equation (Lunney, Springer, and Thibodeaux 1985) given below.

$$^{1}K'_{A1} = 19.6\ V_x^{2.23}\ D_{A2}^{.667} \tag{3}$$

where

V_x = wind speed, miles per hour

D_{A2} = molecular diffusivity of chemical A in water, cm^2/sec

Using a wind speed of 1 mph, a molecular diffusivity of 4.1 E-06 cm^2/sec, and the observed PCB concentration of 0.01 mg/ℓ (Table 4) yields

$$n_{PCB153} = [19.6\ (1)^{2.23}\ (4.1\ X\ 10^{-6})^{.667}\ \frac{cm}{hr}]\ [1.0\ X\ 10^{-5}\ \frac{mg}{cm^3}] \tag{4}$$

$$n_{PCB153} = 5.0\ E\text{-}08\ \frac{mg}{cm^2\ hr} \tag{5}$$

$$n_{PCB153} = (5.0\ E\text{-}08\ \frac{mg}{cm^2\ hr})\ (\frac{1000\ ug}{mg})\ (\frac{10000\ cm^2}{m^2})$$

$$n_{PCB153} = 0.5\ \frac{ug}{m^2\ hr}$$

14. The estimated value is in the data range given in Table 4. If wind speeds of higher than 1 mph are used, then the estimated emission rates increase. Wind speeds of 4 mph are required for the estimates to exceed the experimental data by an order of magnitude. It is not likely, however, that the air-water interface in the experimental apparatus is equivalent to field

conditions when wind speeds are significantly greater than 1 mph.

15. The experimental data show the theoretical equations to be substantially correct. Until experimental laboratory or field data are available for refuting the theoretical models, the theoretical equation provides a rational basis for making volatile emission estimates.

16. The laboratory study, theoretical model evaluation, and analysis of results presented above were performed by Dr. Jim Brannon, Geochemist, Mr. Tommy Myers, Environmental Engineer, and Mr. Daniel Averett, Environmental Engineer, U.S. Army Engineer Waterways Experiment Station. The work was performed for the U.S. Army Engineer Division, New England (NED). Mr. Mark Otis was Project Manager for NED.

James M. Brannon

JAMES M. BRANNON, PhD
Geochemist
Aquatic Processes and Effects Group

Tommy E. Myers

TOMMY E. MYERS
Environmental Engineer
Water Supply and Waste Treatment Group

Daniel E. Averett

DANIEL E. AVERETT
Environmental Engineer
Water Supply and Waste Treatment Group

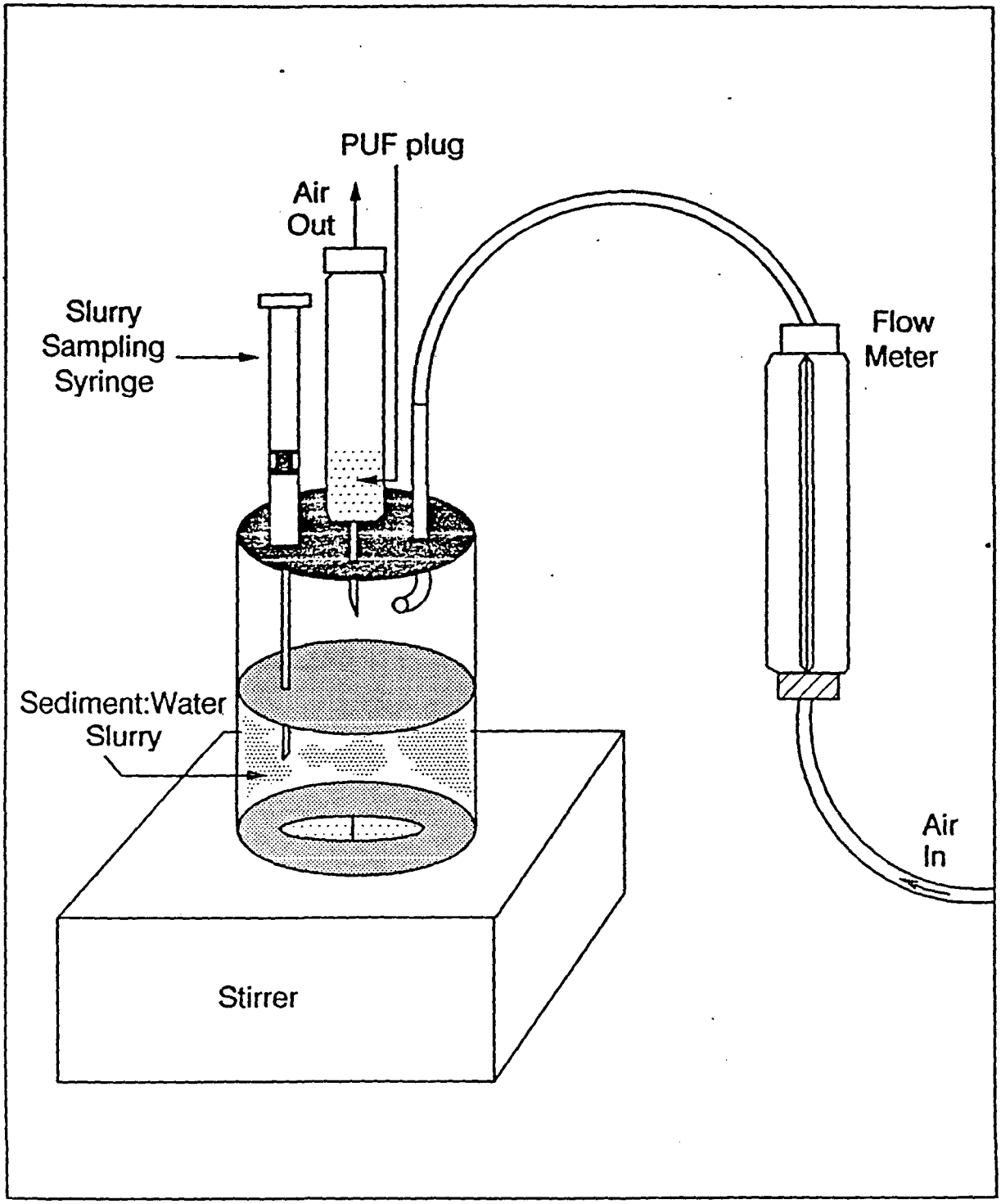

FIGURE 1. EXPERIMENTAL APPARATUS

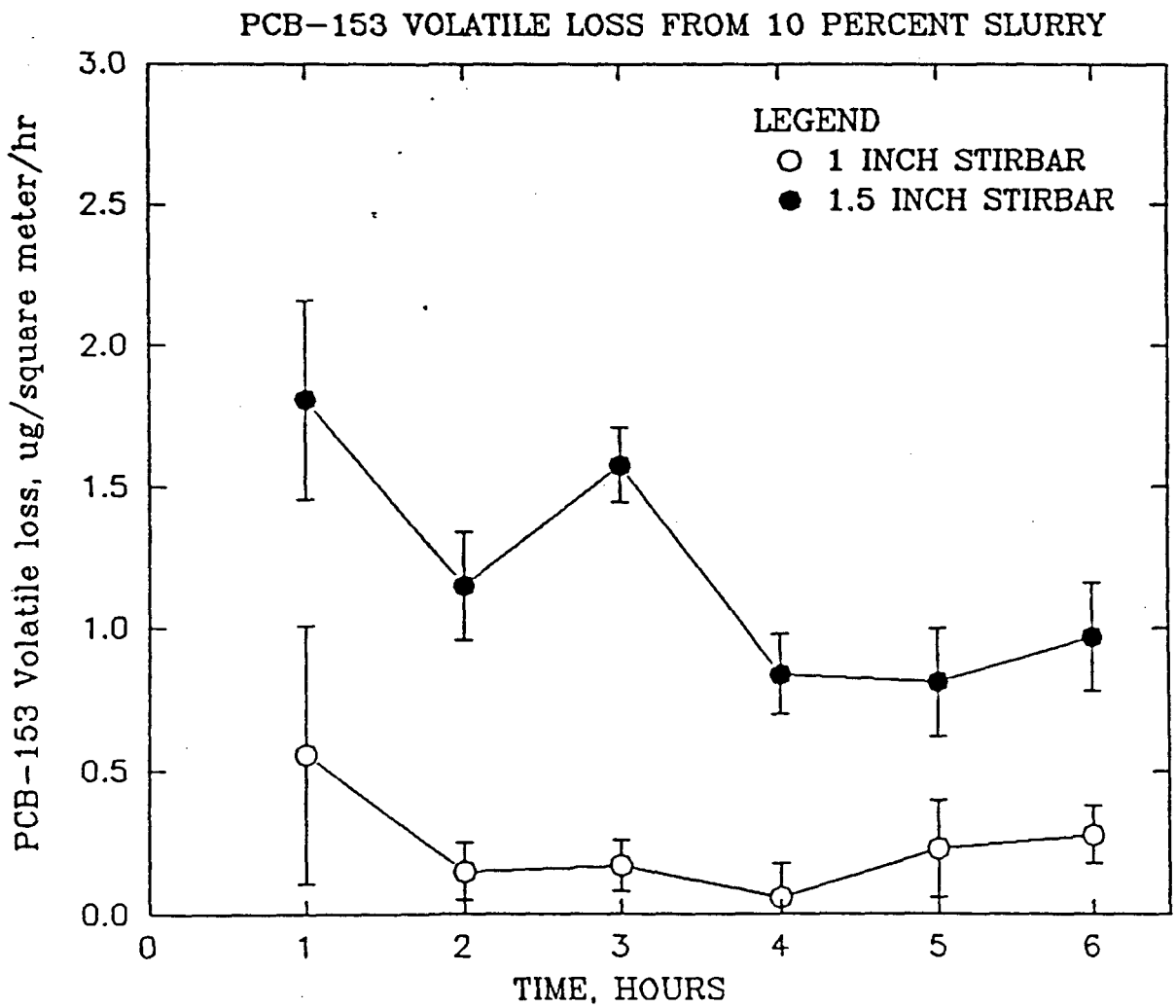

Figure 2. PCB-153 Volatile Loss from 10 percent slurry with 1- and 1.5-in. stirbars

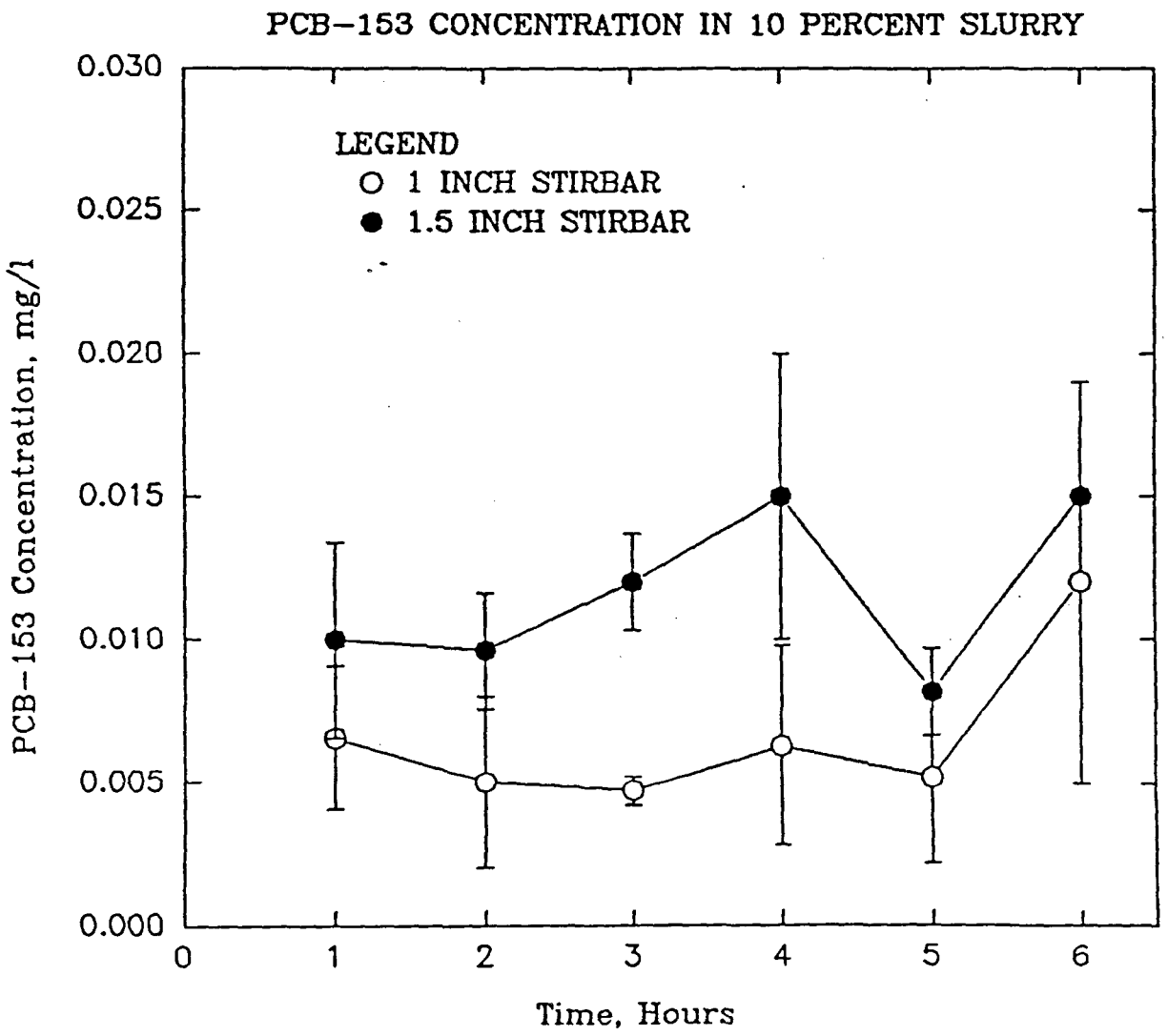

Figure 3. PCB-153 solution concentration in 10 percent slurry units with 1- and 1.5-inch stirbars.

Table 1. Volatile losses ($\mu g/m^2/hr$) and water concentrations (mg/l) from the 10 percent slurry. Standard errors are in parenthesis.

	Volatile Losses		
Time, hr	1 inch stirrer	1.5 inch stirrer	2 inch stirrer
1	0.56 (0.45)	1.81 (0.35)	1.18 (0.84)
2	0.15 (0.10)	1.15 (0.19)	1.10 (0.85)
3	0.17 (0.09)	1.58 (0.13)	1.44 (0.96)
4	0.16 (0.12)	0.84 (0.14)	0.85 (0.53)
5	0.23 (0.17)	0.81 (0.19)	1.01 (0.45)
6	0.28 (0.10)	0.97 (0.19)	0.84 (0.59)

	Water Concentrations		
Time, hr	1 inch stirrer	1.5 inch stirrer	2 inch stirrer
1	0.007 (0.0025)	0.01 (0.003)	0.013 (0.0025)
2	0.005 (0.003)	0.01 (0.002)	0.012 (0.0006)
3	0.005 (0.0005)	0.012 (0.0017)	0.009 (0.0004)
4	0.006 (0.0035)	0.015 (0.005)	0.012 (0.002)
5	0.005 (0.003)	0.008 (0.0015)	0.007 (0.0015)
6	0.012 (0.007)	0.015 (0.0002)	0.013 (0.0004)

Table 2. Volatile losses ($\mu g/m^2/hr$) and water concentrations (mg/l) from the 5 percent slurry. Standard errors are in parenthesis.

	Volatile Losses		
Time, hr	1 inch stirrer	1.5 inch stirrer	2 inch stirrer
2	0.68 (0.63)	0.50 (0.41)	1.04 (0.80)
4	0.67 (0.62)	0.44 (0.34)	0.73 (0.47)
6	0.61 (0.54)	0.43 (0.36)	0.90 (0.65)
24	Samples lost due to air regulator malfunction		

	Water Concentrations		
Time, hr	1 inch stirrer	1.5 inch stirrer	2 inch stirrer
2	0.003 (0.000007)	0.004 (0.002)	0.008 (0.0006)
4	0.007 (0.0015)	0.008 (0.006)	0.009 (0.0002)
6	0.006 (0.003)	0.003 (0.0008)	0.010 (0.001)
24	Samples lost due to air regulator malfunction		

Table 3. Volatile losses ($\mu g/m^2/hr$) and water concentrations (mg/l) from the 1 percent slurry. Standard errors are in parenthesis.

	Volatile Losses		
Time, hr	1 inch stirrer	1.5 inch stirrer	2 inch stirrer
2	0.97 (0.65)	0.47 (0.26)	0.23 (0.11)
4	0.56 (0.40)	0.37 (0.20)	0.18 (0.08)
6	0.56 (0.42)	0.37 (0.24)	0.16 (0.08)
24	0.33 (0.22)	0.20 (0.12)	0.13 (0.06)

	Water Concentrations		
Time, hr	1 inch stirrer	1.5 inch stirrer	2 inch stirrer
2	0.01 (0.005)	0.003 (0.000004)	0.02 (0.02)
4	0.03 (0.0004)	0.002 (0.0008)	0.002 (0.00002)
6	0.005 (0.002)	0.002 (0.0002)	0.003 (0.0003)
24	0.006 (0.003)	0.004 (0.0002)	0.002 (0.0004)

Table 4. Average volatile losses of PCB-153 [$\mu g/m^2/hr$ (SE)] from New Bedford Harbor Sediment and water concentrations [mg/l (SE)] of slurries during six hours of testing.

	Volatile Losses		
Percent Sediment	1 inch stirrer	1.5 inch stirrer	2 inch stirrer
10	0.26 (0.08)	1.19 (0.12)	1.07 (0.25)
5	0.65 (0.30)	0.46 (0.18)	1.00 (0.33)
1	0.70 (0.26)	0.40 (0.12)	0.18 (0.05)

	Water Concentrations		
Percent Sediment	1 inch stirrer	1.5 inch stirrer	2 inch stirrer
10	0.007 (0.001)	0.012 (0.001)	0.011 (0.0005)
5	0.005 (0.001)	0.005 (0.001)	0.007 (0.0012)
1	0.006 (0.002)	0.002 (0.0003)	0.007 (0.005)

Table 5. Cumulative volatile losses of PCB-153 [μg (SE)] from New Bedford Harbor Sediment after six hours of testing.

Percent Sediment	1 inch stirrer	1.5 inch stirrer	2 inch stirrer
10	1.54 (1.03)	7.16 (1.02)	6.40 (4.15)
5	1.95 (1.77)	1.37 (1.10)	2.67 (1.89)
1	2.09 (1.45)	1.21 (0.29)	0.56 (0.26)

ASSESSMENT OF PCB EMISSIONS
NEW BEDFORD HARBOR, NEW BEDFORD, MA

ASSESSMENT OF PCB EMISSIONS
NEW BEDFORD HARBOR, NEW BEDFORD, MA

22 August 1991

1 Introduction

Sediments in the New Bedford Harbor, New Bedford, Massachusets, are heavily contaminated with polychlorinated biphenyls (PCBs). Investigation and remediation of the Harbor is being undertaken by the U.S. Army Corps of Engineers; the Corps has identified several strategies for cleanup of the Harbor, all of which involve dredging of the contaminated sediments and their temporary storage in an intermediate Confined Disposal Facility (CDF). As part of their engineering evaluation of the remediation, the U.S. Army Engineer Waterways Experiment Station (WES) performed an assessment of potential air quality impacts resulting from implementation of the proposed dredging. Their evaluation involved first estimating an emission rate for PCBs released from the CDF and then performing dispersion modeling to determine the maximum ambient air concentrations downwind of the facility. The calculations performed by WES are considered preliminary, but the results suggest that there may be an unacceptable impact on air quality as a result of the proposed dredging and disposal operations.

ERM, Inc. has reviewed the calculations performed by WES and prepared a supplemental evaluation. The objective of ERM's efforts was twofold:

- To determine whether an unacceptable impact on air quality is considered likely as a result of the proposed dredging activities, and
- To assist in determining appropriate control measures, if unacceptable degradation of air quality is anticipated.

Our review involved three tasks:

- Evaluate other methodologies to estimate emission rates for PCBs from the CDF;
- Perform supplemental dispersion analyses to estimate downwind concentrations; and
- Review results of the modeling efforts and compare with applicable ambient air target levels; these comparisons will be used to help focus on those factors (e.g., surface area) which appear to be key to reducing ambient air concentrations, based on the results of the modeling.

The results of each of these tasks are presented in the following sections.

2 Calculation of Emission Rates

The initial task involved reviewing current literature to identify methods for the calculation of emission rates of semivolatile compounds from nonaerated surface impoundments. Following the identification of appropriate methods, calculations were performed to determine a range of emission rates.

The literature survey (Attachment A) indicated that the primary methodology for estimating emission rates relies on the application of a two-phase resistance model. Where the background concentration of the chemical of concern in air is negligible, the model is of the form:

$$e_i = K_i C_s$$

where

e_i = emission rate (g/cm^2-s)

K_i = overall mass transfer coefficient (cm/s)

C_s = liquid phase concentration of contaminant (g/cm^3)

Application of this approach involves the estimation of appropriate coefficients to describe both the gas phase (k_{iG}) and the liquid phase (k_{iL}) mass transfer; these coefficients are then used to derive the overall mass transfer coefficient (K_i). Considerable work has been performed by L. Thibodeaux, D. Mackay, S. Hwang, P. Liss, P. Slater, and others to develop workable methods for estimating these parameters. Their methods have been validated through a number of laboratory experiments where predicted emission estimates were compared to measured values.

Although much work has been done to develop methods for deriving mass transfer coefficients, it appears that these values generally lie within a relatively small range. Liquid phase mass transfer coefficients are typically on the order of 10^{-3} - 10^{-4} cm/s, while gas phase mass transfer coefficients are typically on the order of 10^{-1} cm/s. Various factors have been identified which control the mass transfer process, including wind speed, temperature, and wind fetch. It is recognized that chemical-specific properties such as vapor pressure and

diffusivity also exert moderate influence on the rate of volatilization (Anderson and Parker 1990).

A simpler version of the two phase resistance model (USEPA 1988) was adapted by Farino from work of Thibodeaux and Hwang to describe emission rates from a pool of pure chemical. This model relies on the use of a single, gas-phase mass transfer coefficient to predict the emission rate of the chemical of concern.

In addition to the one and two phase resistance models described above, two other models have been identified which utilize much different approaches. The model put forth by Hartley (USEPA 1987, Dragun 1988) relates the rate of volatilization of a chemical to the rate of evaporation of water. It is based on Fick's first law, in which the rate of molecular diffusion is considered to be proportional to the saturation vapor concentration and the diffusion coefficient.

Another approach is presented in The Soil Chemistry of Hazardous Materials (Dragun 1988), and is derived from a method developed by T. Shen. It predicts the emission rate of a hazardous constituent in a pool of waste, and is based on the vapor pressure and diffusion coefficient of the chemical of concern.

2.1 Comparison of Emission Rates

Emission rates were calculated, using the basic approaches outlined above, to assess potential emissions both from a pool of pure PCBs and from a surface impoundment which contains an aqueous solution of PCBs. The following calculations were performed:

- Estimation of the emission rate of PCBs from a pool of pure product, using the single phase resistance model and assuming that the mass transfer is gas phase controlled; the gas phase mass transfer coefficient (k_{IG}) was calculated according to Hwang (1982), as presented in the Superfund Exposure Assessment Manual (USEPA 1988).
- Estimation of the emission rate from a pool of pure PCBs, again using the single phase resistance model and assuming that the mass transfer is gas phase controlled; in this calculation, the gas phase mass transfer coefficient is computed according to the method presented in NTGSS (USEPA 1989).
- Estimation of the emission rate of PCBs from an aqueous solution, using the two phase resistance model and assuming that the mass

transfer is liquid phase controlled; the PCB concentration was assumed to be equal to the water solubility of PCBs; the mass transfer coefficients were calculated according to the methods presented in the Superfund Exposure Assessment Manual (USEPA 1988).

- Estimation of the emission rate of PCBs using the method developed by Hartley (USEPA 1987, p. 169); this method was used to evaluate emissions both from a pool of pure chemical and from an aqueous solution; in the latter case, the concentration of PCBs was assumed to be equal to the water solubility.
- Estimation of the emission rate of PCBs using the method developed by Dragun (Dragun 1988, p. 275) and based on the work of T. Shen (1982); as in the previous calculation, the method was used to assess releases both from a pool of pure product and from an aqueous solution.

The estimated emission rates associated with volatile releases from an aqueous solution were then compared to the range of emission rates predicted by WES for varying wind speeds. In addition, the emission rates developed by WES were recalculated in two ways:

- Using the assumptions in this review (as described in the next section), to permit a more accurate comparison; and
- Using data for different Aroclors, to determine the variability in emissions anticipated for the various PCB compounds.

2.2 Assumptions

To ensure consistency in results, the following assumptions were used, where applicable, in the calculation of emission rates:

- Chemical data for Aroclor® 1254 were used in all calculations (except where noted).
- The concentration of PCBs in an aqueous solution is equal to the water solubility of Aroclor® 1254 (obtained from the literature); the water solubility of a chemical serves as the upper bound of the liquid phase concentration (C_s) used in the calculation of emission rate (e_l).
- The exposed area over which emissions can occur has the dimensions of 100 meters by 100 meters.
- The temperature is equal to 303° K (30° C).

- The wind speed is equal to 3 m/s.

2.3 Summary of Results

The calculated emission rates are summarized in Tables 1 through 3.

Table 1
Evaluation of Emissions from a Pool of Pure PCBs

Model	Result (g/cm^2-s)
(1) Single phase resistance	4.3×10^{-10}
(2) Single phase resistance	4.6×10^{-10}
(3) Two phase resistance	NA
(4) Hartley	1.3×10^{-10}
(5) Dragun	5.4×10^{-12}
(-) WES	NA

Table 2
Evaluation of Emissions from an Aqueous Mixture of PCBs

Model	Result (g/cm^2-s)
(1) Single phase resistance	NA
(2) Single phase resistance	NA
(3) Two phase resistance	3.1×10^{-10}
(4) Hartley	4.0×10^{-18}
(5) Dragun	1.7×10^{-19}
(-) WES	1.2×10^{-11} - 8.8×10^{-11}
(-) WES*	5.0×10^{-12}

* The emission rate calculated by WES was modified to include the specific assumptions used in this exercise (i.e., wind speed = 3 m/s and PCB concentration = water solubility of Aroclor® 1254).

Table 3
Comparison of Emission Estimates† for Various Aroclors®

Aroclor®	Result (g/cm^2-s)
Aroclor 1016	7.4×10^{-11}
Aroclor 1221	7.4×10^{-09}
Aroclor 1232	3.1×10^{-08}
Aroclor 1242	4.2×10^{-11}
Aroclor 1248	9.3×10^{-12}
Aroclor 1254	5.2×10^{-12}
Aroclor 1260	4.4×10^{-13}

† Emission estimates are based on the calculations performed by WES, but have been modified to incorporate the properties of specific Aroclors.

2.4 Observations and Conclusions Regarding the Estimation of Emission Rates

Based on the preceding calculations, the following observations may be made:

- There is general agreement among the various approaches used to assess emissions from a pool of pure product.
- There is also relative agreement among the various applications of the two phase resistance method. Although WES uses a more detailed method to calculate k_{iL} and k_{iG}, the results do not vary over more than one or two orders of magnitude. This is consistent with information presented in the current literature which suggests that k_{iL} (and hence the overall emission rate) does not vary by more than a factor of approximately 50, in spite of variations in wind speed and fetch.
- A more interesting comparison can be made between the results of Hartley and Dragun methods and the two phase resistance model. As stated previously, the Hartley method is based on relating the volatilization of a chemical to the evaporation of water, while the Dragun approach draws from an earlier method developed by Shen which relates emission rate to a chemical's

vapor pressure and diffusion coefficient. It is recognized that both methods were developed to assess the volatilization of chemicals from a spill or a pool of pure chemical, and, hence, may not be directly applicable to the assessment of emissions of dissolved phase constituents. However, it is interesting that, when these methods are used to estimate the emissions from a pool of pure product (i.e., weight fraction equal to 100%), the predicted emissions are on the same order of magnitude (10^{-10} g/cm^2-s - 10^{-12} g/cm^2-s) as the emissions calculated using the two phase resistance model and a dissolved phase concentration equal to the water solubility. When the Hartley and Dragun models are applied using a weight fraction of PCBs equal to the solubility, the predicted emission rate is 6 - 8 orders of magnitude below the emission rates predicted using the two phase resistance model.

- As shown in Table 3, emission estimates made for different Aroclors result in a range of estimates spanning five orders of magnitude (i.e., 4×10^{-13} - 3×10^{-8} g/cm^2-s). However, for those Aroclors which are believed to be the primary contaminants at the New Bedford facility (Aroclor 1242 and Aroclor 1254), the emission estimates are within an order of magnitude of each other. Still, these results indicate the need for careful analysis to verify which Aroclors are present in the New Bedford sediments.

- A review of literature indicates that caution must be taken in predicting the emission rates for mixtures. Apparently, predicted emission rates tend to greatly overestimate total emissions. This is perhaps born out by the experiments undertaken by WES, in which the air concentrations of PCBs were below the limits of detection.

- A review of the available literature indicates that there is good correlation between predicted and measured emissions, <u>for well-designed laboratory studies</u>. However, considerable care is necessary to accurately measure emissions.

- Little if any work appears to have been done to correlate predicted and measured ambient air concentrations in outside of the laboratory.

Finally, it should be emphasized that these calculations do not address the effect of exposed surface area on total emissions; this may be the single easiest factor to control.

3 Dispersion Modeling

Dispersion models were used to evaluate the potential off-site air concentrations resulting from emissions of volatilized PCBs from the CDF. The models were run with a normalized source emission rate of 1 g/sec, and the resulting predicted concentrations scaled back to the calculated emission rates for the entire CDF.

The CDF was represented in the dispersion models as a flat, square area source measuring 86 meters on a side. Each model was run using both urban and rural dispersion coefficients, since the proper designation of the area surrounding the CDF has not been determined.

Two models were used to evaluate potential downwind concentrations of PCBs:

- the Industrial Source Complex model - Long Term (ISCLT) was used to evaluate annual average concentrations; and
- the SCREEN model was used to evaluate 24 hour average concentrations.

3.1 ISCLT

To evaluate potential annual average ambient concentrations of PCBs, the Industrial Source Complex model (Long Term version) was used. A 4-year average meteorological data set was obtained for the New Bedford airport (1963 - 1967). The meteorological data was obtained in the form of a Stability Array (STAR). A polar receptor grid was constructed around the center of the CDF in angular increments of 22.5 degrees. To increase the accuracy of the area source algorithms in ISCLT, the CDF was represented by four area sources each comprising one quarter of the CDF. The closest receptor was located approximately one source width from the edge of the area sources, i.e. at a distance of 50 meters from the edge of the CDF, or 100 meters from the center of the CDF.

The top three predicted concentrations from runs using urban and rural dispersion coefficients are listed in Table 4. In order to simplify the comparisons, an average flux rate of PCBs from the CDF of 5×10^{-12} $g/cm^2/sec$ is assumed (see Table 2). Using an area of 7.4×10^7 cm^2, the emission rate is approximately 0.00035 g/sec.

Table 4
ISCLT Results

Run Type	Direction* (degrees)	Distance** (meters)	Concentration ($\mu g/m^3$)
Rural	67.5	100	0.068
Rural	90.0	100	0.064
Rural	45.0	100	0.062
Urban	67.5	100	0.029
Urban	90.0	100	0.027
Urban	45.0	100	0.026

* - direction is measured clockwise from true north

** - distance is measured from the center of the CDF

Table 5 shows the maximum concentration in any direction for various distances from the CDF. This table indicates the degree to which concentrations can be expected to drop off with distance.

Table 5
Maximum Concentration Versus Distance

Urban Dispersion Coefficients

Distance (meters)	Concentration ($\mu g/m^3$)
100	0.029
200	0.0089
500	0.0019
1000	0.00058
5000	0.000043

3.2 SCREEN

The SCREEN model was used to evaluate short term (24-hour average) concentrations of PCBs. Two sets of results are shown below for the

screen model. First, the model was run using an E stability (stable atmosphere) and 1.0 m/sec wind speed. These conditions represent the meteorology which produce the least dispersion. However, E stability occurs only during nighttime hours, and therefore the results of this run represent the worst hourly concentrations. It is standard practice to scale the worst hourly concentration by a factor of 0.4 to derive an estimate of the 24-hour average concentration. This approach is conservative, and typically overestimates the 24-hour average.

The model was also run using D stability (neutral atmosphere) and a 5.0 m/sec windspeed. These conditions are representative of an "average" condition throughout the day, and the results of this run are used as representative 24-hour average concentrations.

The results of the SCREEN model are listed in Table 6.

Table 6
SCREEN Model Results

Distance* (meters)	24-Hour Concentration ($\mu g/m^3$) Scaled**	Estimated***
100	0.20	0.046
200	0.080	0.017
500	0.022	0.0038
1000	0.0082	0.0012
5000	0.0010	0.00011

* measured from center of CDF

** 24-hour average extrapolated from the highest predicted one-hour concentration using a scaling factor of 0.4

*** 24-hour average estimated using D stability and a 5.0 m/sec windspeed to represent the most common meteorological condition throughout a 24 hour period.

4 Air Quality Standards

Two ambient air quality standards exist for PCBs in Massachusets: the first is an annual average Allowable Ambient Limit (AAL) PCB concentration of 0.0005 $\mu g/m^3$, and the second is a 24 hour average Threshold Effects Exposure Limit (TEL) of 0.003 $\mu g/m^3$.

The origin of the TEL is unclear. The short term OSHA TWA values for PCBs have been withdrawn and PCBs will be regulated as carcinogens under OSHA. Therefore, in the absence of documented acute toxicological effects, acceptable air concentrations of PCBs should be calculated based on carcinogenic effects.

An acceptable risk-based air exposure concentration can be calculated from the carcinogenic potency factor for PCBs. Using the assumption of lifetime exposure 24 hours per day, the acceptable risk-based concentration is:

$$C_{air} = \frac{\text{acceptable risk level} * \text{body weight}}{\text{carcinogenic potency factor} * \text{inhalation rate}}$$

$$= \frac{10^{-6} * 70\ \text{kg}}{7.7\ 1/\text{mg/kg/day} * 20\ \text{m}^3/\text{day}} * 1000\ \mu g/mg$$

$$= 0.00045\ \mu g/m^3$$

However, since the CDF will only be operational for less than one year, the acceptable concentration can be adjusted to reflect the lifetime average dose by multiplying by 70/1. The acceptable concentration then becomes 0.032 $\mu g/m^3$. In addition, the highest ambient air impacts from the site will occur only at short distances since the source is a non-elevated, ambient temperature area source. If areas surrounding the CDF can be properly characterized as industrial, the acceptable concentration in those areas may be further modified to account for exposure occurring 8 hours/day and 250 days/year. The resulting acceptable concentration for industrial areas is 0.14 $\mu g/m^3$. Table 6 summarizes ambient air target levels.

Table 6
Ambient Air Target Levels

Target Level	Concentration
Massachusets TEL	0.003 $\mu g/m^3$
Massachusets AAL	0.0005 $\mu g/m^3$
Risk-based (lifetime exposure)	0.00045 $\mu g/m^3$
Risk-based (one-year exposure)	0.032 $\mu g/m^3$
Risk-based (industrial area)	0.14 $\mu g/m^3$

5 Discussion and Conclusions

A great deal of uncertainty accompanies the estimation of volatile emissions of PCBs from the proposed CDF. Two different physical models yielded emission estimates approximately 6 to 8 orders of magnitude apart. In addition, the use of physical parameters for different arochlors can yield widely varying emission estimates within a single method.

Several ambient air target levels exist for evaluating predicted ambient air concentrations. A strong case can be constructed for using only risk-based concentrations to account for the short exposure duration of this remediation. Requiring a short term remedial measure to meet long term health-based standards is overly protective and unnecessary. Also, the use of a short term (24-hour average) standard for PCBs is not appropriate, since PCBs do not exhibit acute toxicological effects which would override carcinogenicity concerns. Nevertheless, the Massachusets TEL of 0.003 $\mu g/m^3$ seems unreasonably low, and should be evaluated further.

Using the more conservative estimate of emissions from the CDF, the predicted annual average ambient air concentrations fell below the risk-based criterion for industrial areas of 0.14 $\mu g/m^3$. The annual average concentration at 100 meters from the center of the CDF was slightly above the risk-based level for residential areas when rural dispersion coefficients were used, however the area surrounding the CDF at this distance would likely be classified as urban. All predicted concentrations at or beyond 200 meters from the center of the CDF fell below the risk-based criterion for residential areas.

If the emission rate from the CDF were estimated using the Hartley or Dragun equations would result in all predicted ambient concentrations at all locations falling well below the most stringent target levels.

In conclusion, two issues are vitally important to the evaluation of potential emissions from the CDF and their significance with regard to the need for control measures:

- The ambient air impacts of PCB emissions should be evaluated using risk-based calculations to account for the short duration of the potential exposures. The use of a short-term standard should be avoided unless the standard is based on specific acute toxicological studies. A common method for setting short term ambient standards is to take the ACGIH TLV for the chemical and divide it by appropriate safety factors. Safety factors usually range between 10 and 100. The TLV for PCBs has been withdrawn, however the 1989 value was 0.5 mg/m^3 or 1 mg/m^3 depending on the degree of chlorination. Applying a safety factor of 100 to these values yields a short term concentration several orders of magnitude above the Massachusets TEL of 0.003 $\mu g/m^3$. Therefore, the validity of the TEL for use in this situation should be carefully evaluated.
- The actual emissions of PCBs from the CDF must be more accurately determined by careful laboratory testing. A well-designed bench-scale test will help significantly in determining what the emission rate is likely to be. It is important that the tests be set up to evaluate emissions from both the dissolved phase and the sheen which may form over part of the CDF. If the sheen can be reproduced in the lab, a sample should be taken and analyzed to determine the exact contents (including arochlor specificity) of the sheen. The emission tests should be repeated for different conditions, including varying wind speeds, temperatures, and liquid phase concentrations.

If the results of the emissions testing confirm the more conservative model of volatilization, and the remedial action is required to comply with the Massachusets TEL and AAL, then there may be no alternative but to construct a cover over the CDF. If, however, a risk-based approach is acceptable, or emissions are shown to be much lower than the Thibodeaux model would suggest, then less stringent measures may suffice.

METALS EMISSIONS COMPUTER RUNS

MEMORANDUM

TO: File #208-01-09

FROM: John Gallagher

DATE: August 28, 1991

The NAAQS and State Ambient Air Quality Standard (310 CMR 6.00) were reviewed especially in regard to heavy metal emissions. Emission limits for heavy metals were evaluated based on Guidance on *Metals and Hydrogen Chloride Controls for Hazardous Waste Incinerators, Volume IV of the Hazardous Waste Incineration Guidance Services* (EPA/530-SW-90-004). This document specifies waste concentrations, feed rates and emission rate screening limits which are determined based on effective stack height and terrain. ERM determined with the proper combination of sediment feed rates, stack height and other operating conditions, emissions of metals will not cause unacceptable ambient concentrations. (See attached computer runs.) The Remediation Contractor will be required to demonstrate that the particular equipment and operating conditions proposed do not cause unacceptable emissions.

MAXIMUM ALLOWABLE EMISSIONS VS. STACK HEIGHT:

EMISSIONS

STACK HEIGHT (ft)	CADMIUM (g/s)	CHROMIUM (g/s)	LEAD (g/s)	ZINC (g/s)	NICKEL (g/s)	COPPER (g/s)	PCB (g/s)
100	1.8009E-03	2.7014E-04	1.1670E-01	1.4848E+00	5.4461E-03	3.1120E-01	6.4834E-04
125	2.1188E-03	3.1782E-04	1.3730E-01	1.4848E+00	6.4073E-03	3.6613E-01	7.6278E-04
150	2.4766E-03	3.7149E-04	1.6049E-01	1.4848E+00	7.4893E-03	4.2796E-01	8.9158E-04
175	2.8833E-03	4.3250E-04	1.8684E-01	1.4848E+00	8.7191E-03	4.9824E-01	1.0380E-03
200	3.3629E-03	5.0444E-04	2.1792E-01	1.4848E+00	1.0169E-02	5.8111E-01	1.2107E-03
225	3.9223E-03	5.8835E-04	2.5417E-01	1.4848E+00	1.1861E-02	5.8775E-01	1.4120E-03
250	4.5944E-03	6.8916E-04	2.9772E-01	1.4848E+00	1.3893E-02	5.8775E-01	1.6540E-03

EMISSIONS

STACK HEIGHT (ft)	CADMIUM (lb/hr)	CHROMIUM (lb/hr)	LEAD (lb/hr)	ZINC (lb/hr)	NICKEL (lb/hr)	COPPER (lb/hr)	PCB (lb/hr)
100	1.4263E-02	2.1395E-03	9.2427E-01	1.1760E+01	4.3133E-02	2.4647E+00	5.1349E-03
125	1.6781E-02	2.5172E-03	1.0874E+00	1.1760E+01	5.0746E-02	2.8998E+00	6.0412E-03
150	1.9615E-02	2.9422E-03	1.2710E+00	1.1760E+01	5.9315E-02	3.3894E+00	7.0613E-03
175	2.2836E-02	3.4254E-03	1.4798E+00	1.1760E+01	6.9055E-02	3.9460E+00	8.2209E-03
200	2.6634E-02	3.9952E-03	1.7259E+00	1.1760E+01	8.0542E-02	4.6024E+00	9.5884E-03
225	3.1065E-02	4.6597E-03	2.0130E+00	1.1760E+01	9.3940E-02	4.6550E+00	1.1183E-02
250	3.6388E-02	5.4582E-03	2.3579E+00	1.1760E+01	1.1004E-01	4.6550E+00	1.3100E-02

MAXIMUM FEED RATES:

POLLUTANT	CONCENTRATION IN FEED (mg/kg) OR (ppm)	FEED RATE (g/s)	(lb/hr)
CADMIUM	9.00	1.5909E-02	1.2600E-01
CHROMIUM	136.25	2.4085E-01	1.9075E+00
LEAD	252.50	4.4634E-01	3.5350E+00
ZINC	840.00	1.4848E+00	1.1760E+01
NICKEL	22.50	3.9773E-02	3.1500E-01
COPPER	332.50	5.8775E-01	4.6550E+00
PCB	200000.00	3.5354E+02	2.8000E+03

Assumptions:

SEDIMENT FEED RATE - 7 TONS/HR
MOISTURE - 50% (3.5 TONS/hr)
PCB Concentration - 200,000 ppm (wt)
2800 lbs/hR

Reference model
Tier 3 Analysis
Contractor Run the model
Set Stack Height based on feed rate and
APCC efficiency

→

SYSTEM EFFICIENCY REQUIRED VS. STACK HEIGHT:

SYSTEM EFFICIENCY

STACK HEIGHT (ft)	CADMIUM	CHROMIUM	LEAD	ZINC	NICKEL	COPPER	PCB
100	88.6798%	99.8878%	73.8536%	0.0000%	86.3071%	47.0520%	99.9998%
125	86.6817%	99.8680%	69.2386%	0.0000%	83.8902%	37.7063%	99.9998%
150	84.4327%	99.8458%	64.0441%	0.0000%	81.1698%	27.1870%	99.9997%
175	81.8764%	99.8204%	58.1398%	0.0000%	78.0776%	15.2304%	99.9997%
200	78.8616%	99.7906%	51.1766%	0.0000%	74.4310%	1.1295%	99.9997%
225	75.3455%	99.7557%	43.0554%	0.0000%	70.1779%	0.0000%	99.9996%
250	71.1209%	99.7139%	33.2978%	0.0000%	65.0678%	0.0000%	99.9995%

MAXIMUM DISPERSION COEFFICIENT:

(MAXIMUM OCCURED AT RADIUS = 500 METERS, AZIMUTH = 180°)

STACK HEIGHT (ft)	DISPERSION COEFFICIENT (µg/m3)/(g/s)
100	0.7712
125	0.6555
150	0.5608
175	0.4817
200	0.4130
225	0.3541
250	0.3023

SHORT-TERM ACTION LEVEL CALCULATIONS

ERM-New England, Inc. 205 Portland Street • Boston, Massachusetts 02114 • (617) 742-8228

Project NEW BEDFORD HARBOR HOT SPOTS W.O. No. 208-01-09 Sheet 1 of 1
Subject By JG Date 11/15/91
Chkd. by JDF Date 11/21/91

SHORT TERM ACTION LEVELS

THE FOLLOWING CALCULATION PROVIDES THE BASIS FOR THE SHORT-TERM ACTION LEVEL FOR PCBs IN THE AMBIENT AIR AROUND THE NEW BEDFORD SITE.

$$C_{AL} = \frac{\text{ACCEPTABLE RISK LEVEL} \cdot \text{BODY WEIGHT} \cdot \text{EXPOSURE DURATION}}{\text{CANCER POTENCY FACTOR} \cdot \text{INHALATION RATE}}$$

$$= \frac{10^{-6} \cdot 70\ \text{kg}}{7.7\ \text{l/mg/kg, DAY} \cdot 20\ \text{m}^3/\text{DAY}} \quad \frac{0.5\ \text{YRS (IE. 6 MONTHS)}}{70\ \text{YRS}} \quad 1000\ \mu\text{g/mg}$$

$$= 0.064\ \mu\text{g/m}^3$$

$$= 64\ \text{ng/m}^3$$

significant cost advantage (about $2 million). Actually, the cost advantage is probably even greater, since:

1. EPA's incineration costs are relatively low.
2. Costs for fixation (about $500,000) are included in the cost estimate for extraction, even though the extraction residue is not likely to require fixation.

In addition to its cost advantage, I must also point out that extraction has several environmental benefits. Extraction produces a separation of organic contaminants (PCBs) and inorganic contaminants (heavy metals). In this manner, the method of treating each fraction can be fully optimized without sacrificing treatment effectiveness. Extracted oils are destroyed in a liquid incinerator, while metals reside with the solids. Leaching tests (EP Toxicity) conducted on the extracted solids indicate that the heavy metals do not leach to any great extent.

In contrast, the incineration of Hot Spot sediments will likely result in undesirable emissions, especially heavy metals. Incineration also tends to oxidize and thereby "liberate" metals in the residual ash, making them more prone to leach into the environment. Therefore, while both technologies reduce the volume, toxicity and mobility of the PCBs, the extraction process also reduces the mobility of the metals. Incineration, on the other hand, increased the mobility, and possibly the toxicity, of the metals.

E.C. Jordan, in the public meeting held on August 3, 1989, raised reliability as a potential drawback of extraction. The extraction process developed by Resources Conservation Company has been demonstrated in one full-scale application and in several pilot tests. While it has probably not received as much scrutiny as incineration, it is certainly not an unknown technology.

In light of the above, I suggest that EPA reconsider its decision to incinerate the sediments, and employ extraction instead. Keep in mind that EPA is supposed to encourage the use of innovative and alternative technologies. The New Bedford Harbor Hot Spot Operable Unit presents a perfect opportunity to do just that.

EPA RESPONSE TO HUGHES

The "No Action" or minimal action alternative is routinely evaluated in a feasibility study to provide a benchmark for comparison for other remedial alternatives. EPA agrees that the "No Action" alternative does not merit serious consideration for the highly contaminated Hot Spot sediments. With regard to solidification, no destruction of