RETURN TO 1998 ROD AR INDEX

US Army Corps
of Engineers
Omaha District

NEW BEDFORD HARBOR
SUPERFUND HAZARDOUS WASTE CLEANUP
HOT SPOT OPERABLE UNIT
NEW BEDFORD, MASSACHUSETTS

FINAL AS-BUILTS
24OCT95

FINAL

SDMS DocID 507963

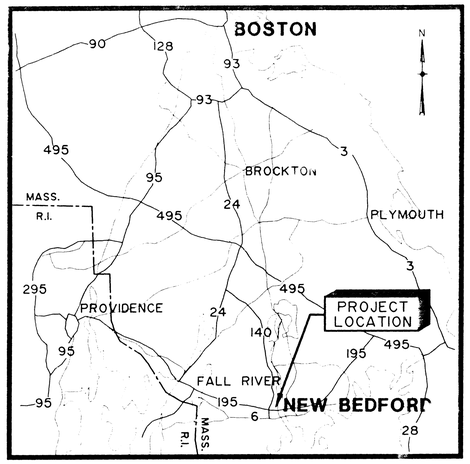

PROJECT LOCATION MAP

NOT TO SCALE

DRAWING CODE	DRAWING TITLE
	COVER SHEET
CER47-400E-000	INDEX AND PROJECT LOCATION SHEET
CER47-400E-001	LEGEND SHEET 1 OF 2
CER47-400E-002	LEGEND SHEET 2 OF 2
CER47-400E-003	ABBREVIATIONS

DRAWING CODE	DRAWING TITLE
CER47-400E-101	PROCESS FLOW DIAGRAM
CER47-400E-102	HYDRAULIC PROFILE
CER47-400E-111	PIPING & INSTRUMENTATION DIAGRAM SHEET 1 OF 2
CER47-400E-112	PIPING & INSTRUMENTATION DIAGRAM SHEET 2 OF 2
CER47-400E-200	SITE LAYOUT
CER47-400E-201	SITE LAYOUT
CER47-400E-202	GENERAL PLAN AND INDEX
CER47-400E-203	DREDGING PLAN
CER47-400E-204	SEDIMENT SAMPLE LOCATIONS
CER47-400E-205	FENCE AND WIND SCREEN DETAILS
CER47-400E-209	DEMOLITION PLANS, ELEVATION & DETAIL
CER47-400E-210	CDF CAP SUBGRADE PLAN
CER47-400E-211	CDF CAP FINIAL GRADE PLAN
CER47-400E-212	CDF CAP SECTIONS
CER47-400E-213	CDF CAP DETAILS
CER47-400E-300	TREATMENT BUILDING FLOOR PLAN & FDN DETAILS
CER47-400E-301	TREATMENT BUILDING ARCHITECTURAL ELEVATIONS
CER47-400E-400	YARD PIPING
CER47-400E-401	CDF CELL 2 PUMP STATION PLANS SECTIONS DETAILS
CER47-400E-402	CDF CELL 3 PUMP STATION PLANS SECTIONS DETAILS
CER47-400E-403	TREATMENT BUILDING PIPING PLAN & SECTIONS
CER47-400E-404	TREATMENT BUILDING PIPING SECTIONS
CER47-400E-405	TREATMENT BUILDING PIPING SECTIONS
CER47-400E-406	TREATMENT BUILDING FILTER PIPING AND PIPE SUPPORT DETAILS
CER47-400E-407	SITE & YARD PLAN PIPING DETAILS
CER47-400E-408	TREATMENT BUILDING PIPE SUPPORT DETAILS

DRAWING CODE	DRAWING TITLE	
CER47-400E-500	ELECTRICAL LEGEND	
CER47-400E-501	TREATMENT BUILDING	SITE SERVICES
CER47-400E-502	TREATMENT BUILDING	SINGLE LINE DIAGRAM
CER47-400E-503	TREATMENT BUILDING	SINGLE LINE DIAGRAM
CER47-400E-504	TREATMENT BUILDING	LIGHTS & RECEPTACLES
CER47-400E-505	TREATMENT BUILDING	CONDUIT PLAN
CER47-400E-506	TREATMENT BUILDING	HEAT TRACE SCHEMATICS
CER47-400E-507	TREATMENT BUILDING	INSIDE INTERCONNECTION DIAGRAM
CER47-400E-508	TREATMENT BUILDING	OUTSIDE INTERCONNECTION DIAGRAM
CER47-400E-509	TREATMENT BUILDING	LOOP DIAGRAM No. 1
CER47-400E-510	TREATMENT BUILDING	LOOP DIAGRAM No. 2
CER47-400E-511	TREATMENT BUILDING	LOOP DIAGRAM No. 3
CER47-400E-512	TREATMENT BUILDING	LOOP DIAGRAM No. 4
CER47-400E-513	TREATMENT BUILDING	INSTRUMENT PANEL LAYOUT
CER47-400E-514	TREATMENT BUILDING	INSTRUMENT SUBPANEL LAYOUT
CER47-400E-515	TREATMENT BUILDING	ANNUNCIATOR WINDOW DETAIL
CER47-400E-516	TREATMENT BUILDING	SCHEMATIC DIAGRAM No. 1
CER47-400E-517	TREATMENT BUILDING	SCHEMATIC DIAGRAM No. 2
CER47-400E-518	TREATMENT BUILDING	PLC I/O WIRING DIAGRAM No. 1
CER47-400E-519	TREATMENT BUILDING	PLC I/O WIRING DIAGRAM No. 2
CER47-400E-520	TREATMENT BUILDING	ANNUNCIATOR WIRING DETAIL
CER47-400E-521	TREATMENT BUILDING	INSTRUMENT PANEL BILL OF MATERIAL

$$ — THINK VALUE ENGINEERING — $$

Revisions

Symbol	Descriptions	Date	Approved

The ERM Group — ERM-New England, inc.
205 Portland Street • Boston, Massachusetts

U. S. ARMY ENGINEER DISTRICT
CORPS OF ENGINEERS
OMAHA, NEBRASKA

Designed by: [illegible]
Drawn by: D.R.S.
Checked by: [illegible]
Reviewed by: [illegible]
Submitted by: [illegible]
Chief Section

NEW BEDFORD HARBOR MASSACHUSETTS
SUPERFUND HAZARDOUS WASTE CLEANUP
HOT SPOT OPERABLE UNIT

INDEX & PROJECT LOCATION SHEET

Scale: As Shown
Date: DEC 1991
Spec. No: DACW45-92-R-0020
Contract No: DACW45-92-C-0101
Drawing Code: CER47-400E-000

THIS FOLIO INCLUDES REISSUED AND DESCRIPTIVE AMENDMENTS

Environmental Resources Management, inc.
Exton, Pennsylvania 19341 • (215) 524-3500

CIVIL LEGEND

EXISTING	NEW	
		Buildings
		Roads
		Curb & gutter
		Walks
		Railroad
12	12	Contours
77.2	77.2	Spot Grade Elevations
		Direction of Drainage
		Culvert
SD	SD	Storm Drain
		Subdrain
		Subdrain Outlet Line
W	W	Water Line
FW	FW	Fire Water Line
S	S	Sanitary Sewer
FM	FM	Force Main
FW	FW	Fire Protection Water Line
WD	WD	Waste Drain
OR	OR	Subdrain Flushing & Observation Riser
		Manhole Self Explanatory Depending on Type of Utility Line
		Curb Inlet
		Area Inlet
		Fire Hydrant
		Gate Valve & Valve Box or Service Stop & Box
PIV	PIV	Post Indicator Valve
DH-2	DH-2	Drill Hole
MW-1	MW-2	Monitoring Well
		Control Point

FENCES

EXISTING	NEW	
xx	xx	Chain Link Security
x	x	Barbed Wire
		Woven Wire
		Wood

ARCHITECTURAL LEGEND

- Earth
- Concrete
- Crushed Rock
- Gravel
- Concrete Masonry Units (Plan)
- Concrete Masonry Units (Section)
- As Indicated
- As Indicated
- Brick
- Wood (Rough)
- Wood (Finish)
- Plywood
- Metal
- Gypsum Wallboard } As Indicated
- Plaster } As Indicated
- Rigid Insulation
- Blanket Insulation
- Glass (Elevation)
- Glass (Large Scale Section)
- Wood Stud Partition
- Metal Stud Partition

MECHANICAL LEGEND

HEATING

- HPS — High Pressure Steam
- MPS — Medium Pressure Steam
- LPS — Low Pressure Steam
- HPC — High Pressure Condensate
- MPC — Medium Pressure Condensate
- LPC — Low Pressure Condensate
- PC — Pumped Condensate
- FW — Feed Water
- HTWS — High Temperature Water Supply
- HTWR — High Temperature Water Return
- HWS — Hot Water Heating Supply
- HWR — Hot Water Heating Return
- GHWS — Glycol Hot Water Heating Supply
- GHWR — Glycol Hot Water Heating Return
- BBD — Boiler Blow-Down
- FOG — Fuel Oil Gage Line
- FOS — Fuel Oil Supply
- FOF — Fuel Oil Fill
- FOR — Fuel Oil Return
- FOV — Fuel Oil Tank Vent
- G — Gas
- F & T Trap
- Thermodynamic Trap
- Bucket Trap
- Thermostatic Trap
- Float Trap

MISCELLANEOUS PIPING

- A — Compressed Air
- VAC — Vacuum
- F — Fire Line
- F — Underslab Fire Line
- FC — Foam Concentrate for AFFF Systems

VALVES & FITTINGS

- Globe Valve
- O, S, & Y Gate Valve w/Tamper Switch
- Gate Valve
- Wafer Check Valve
- Hose Gate Valve
- Plug Valve or Balancing Cock
- Needle Valve
- Strainer
- Relief Valve
- Motor Operated Valve
- Temperature Regulating Valve
- Solenoid Valve
- Pressure Reducing Valve
- Float Valve
- Butterfly Valve
- Ball Valve
- Calibrated Bronze Balancing Valve or Automatic Balancing Valve as indicated
- PA — Anchor
- Expansion Joint, Sliding
- Expansion Joint, Bellows
- Elbow Down
- Elbow Up
- Tee Down
- Tee Up
- Cap
- Union
- Pipe Increaser or Decreaser
- Flange
- Blind Flange

DUCTWORK

- 20 x 12 SG / 700 CFM — Supply Grille (SG)
- 20 x 12 RG / 700 CFM — Return (RG) or Exhaust (EG) Grille (Note at Flr. or Clg.)
- 20 x 12 SR / 700 CFM — Supply Register (SR) (A Grille + integral Vol. Control)
- 20 x 12 GR / 700 CFM — Exhaust or Return Air Inlet Ceiling (Indicate type)
- 20 Ø / 700 CFM — Supply Outlet, Ceiling Round (Type as Specified) Indicate Flow Direction
- 12 x 12 / 700 CFM — Supply Outlet, Ceiling, Rectangular (Type as Specified) Indicate Flow Direction
- Opposed Blade Dampers
- Parallel Blade Dampers
- DG 12 x 6 — Door Grille
- Unit Heater (Vertical)
- Unit Heater (Horizontal)
- Power or Gravity Roof Ventilator-Exhaust (ERV)
- Power or Gravity Roof Ventilator-Supply (SRV)
- Point of Change in Duct Construction (By Static Pressure Class)
- 20 x 12 — Duct (1st Figure, Side Shown 2nd Figure, Side not Shown)
- Acoustical Lining Duct Dimensions For Net Free Area
- Direction of Flow
- Duct Section (Supply)
- Duct Section (Exhaust or Return)
- R — Inclined Rise (R) or Drop (D) Arrow in Direction of Air Flow
- Transitions: Give Sizes. Note F.O.T. Flat on Top or F.O.B. Flat on Bottom if Applicable
- Standard Branch for Supply & Return (No Splitter)
- Splitter Damper
- VD — Volume Damper Manual Operation
- SEC. MOD — Automatic Dampers Motor Operated
- OR AD — Access Door (AD) Access Panel (AP)
- FD AD — Fire Damper: Show Vertical Pos. Show Horiz. Pos.
- SD AD — Smoke Damper
- Turning Vanes
- Flexible Duct
- Flexible Connection

PLUMBING

- DCW — Domestic Cold Water
- DHW — Domestic Hot Water
- RDHW — Recirculating Domestic Hot Water
- SAN — Sanitary
- Vent
- ACID — Acid Waste
- ACID — Acid Vent
- WF — Wall Faucet
- WH — Wall Hydrant
- CO — Clean Out
- FD — Floor Drain
- CO — Wall Clean Out
- ST — Storm Drain Above Floor
- ST — Storm Drain Below Floor

REFRIGERATION

- RL — Refrigerant Liquid
- RD — Refrigerant Discharge (Hot Gas)
- RS — Refrigerant Suction
- CWS — Chilled Water Supply
- CWR — Chilled Water Return
- C — Condenser Water Supply
- CR — Condenser Water Return
- Refrigerant Strainer
- Thermostatic Expansion Valve
- CHWS — Chilled-Hot Water Supply
- CHWR — Chilled-Hot Water Return
- GCWS — Glycol Chilled Water Supply
- GCWR — Glycol Chilled Water Return

TEMPERATURE CONTROLS

SEE TEMPERATURE CONTROL DRAWINGS FOR ADDITIONAL LEGEND

- T — Thermostat
- OA — Outdoor Air Thermostat
- S — Temperature Sensor
- N — Night Thermostat
- PB — Manual Over-ride Switch
- E — EMCS Sensor
- P — Pressure Sensor
- H — Humidity Sensor

STANDARD NORTH ARROWS

N

N

SECTION IDENTIFICATION

- 3 — Section Number
- A-5 A-7 A-6 — Sheet Number of Drawing Where Section Is Shown •
- A-7 A-8 — Sheet Number of Drawing Where Section Is Cut •
- Any Additional Drawings Where Section Is Cut Will Be Listed Only on Drawing Where Section Is Shown

• Sheet Numbers Ommitted If Section Is Cut and Detailed on Same Drawing

GENERAL NOTES:

1. These Legends are composed of Standard Symbols and are pertinent to the conditions on this set of drawings to the extent applicable.
2. Additional Legends and/or another Legend Sheet may appear in this set of drawings to indicate specific conditions in lieu of symbols shown on this sheet.
3. Existing facilities to be removed are indicated by use of these symbols and hachured thusly.

$$ — THINK VALUE ENGINEERING — $$

Revisions

Symbol	Descriptions	Date	Approved

The ERM Group — ERM-New England, Inc. — 205 Portland Street • Boston, Massachusetts

U.S. ARMY ENGINEER DISTRICT
CORPS OF ENGINEERS
OMAHA, NEBRASKA

Designed by: SPF
Drawn by: D.R.S.
Checked by: SPF
Reviewed by: SCS
Submitted by: Chief Section

NEW BEDFORD HARBOR, MASSACHUSETTS
SUPERFUND HAZARDOUS WASTE CLEANUP
HOT SPOT OPERABLE UNIT

LEGEND
SHEET 1 OF 2

Scale: As Shown
Date: DEC. 1991
Spec. No: DACW45-92-R-0020
Contract No: DACW45-92-C-0101
Drawing Code: **CER47-400E-001**

COMMONWEALTH OF MASSACHUSETTS — ALAN F. HASSETT — No. 33671 — REGISTERED PROFESSIONAL ENGINEER

COMMONWEALTH OF MASSACHUSETTS — JAMES D. FITZGERALD — No. 38804 — REGISTERED PROFESSIONAL ENGINEER

Environmental Resources Management, inc.
Exton, Pennsylvania 19341 • (215) 524-3500

LINE NUMBERING AND DESIGNATIONS

LINE SIZE
CLASSIFICATION OF USE
SEQUENTIAL NUMBERING
TYPE OF MATERIAL
DOUBLE WALL PIPE

2"WR-15-PVC-DW

CLASSIFICATION

AE = AIR ENVIRONMENTAL
AU = AIR UTILITY
CF = CHEMICAL FEED
DL = DRAIN LINE
WP = WATER POTABLE
WR = WASTEWATER RETURN
WW = WASTEWATER

MATERIAL

CS = CARBON STEEL
PVC = POLYVINYLCHLORIDE PIPE
TUBING = POLYPROPYLENE

PROCESS LINES

8"WW-02-PVC — MAJOR PROCESS LINE
8"WW-02-PVC-DW — PROCESS LINE IN DOUBLE WALL PIPE
1-1/2"WP-41-PVC — MINOR PROCESS LINE

VALVE NUMBERING

BALL VALVES = V100
PLUG VALVES = V200
CHECK VALVES = V300
GATE VALVES = V400
BUTTERFLY VALVES = V500

VALVES

SPRING LOADED BALL CHECK VALVE
MOTORIZED BUTTERFLY VALVE
BACKFLOW PREVENTER

VALVE: SPECIAL CONDITIONS

N.O. = NORMALLY OPEN
N.C. = NORMALLY CLOSED
F.O. = FAIL OPEN
F.C. = FAIL CLOSED

EQUIPMENT LABELS

ME-101
SEQUENTIAL TAG NUMBER
EQUIPMENT CODE

EQUIPMENT CODES

AD = ADSORBER
AG = AGITATOR
C = COMPRESSOR
CF = CHEMICAL FEED SYSTEM
F = FILTER
ME = MECHANICAL EQUIPMENT
P = PUMP
SM = STATIC MIXER
TK = TANK
UV = ULTRAVIOLET SYSTEM

PUMPS

SUBMERSIBLE PUMP
METERING PUMP
PROGRESSING CAVITY PUMP
IN-LINE VERTICAL CENTRIFUGAL PUMP

EQUIPMENT

IN-LINE STATIC MIXER
RUPTURE DISK
AGITATOR/MIXER
AIR COMPRESSOR
COMPOSITE SAMPLER

MISCELLANEOUS

TO ME-101 — CONTINUATION FLAG/NOTE
VENDOR PACKAGE OR PACKAGE UNIT
DIRECTION TO SLOPE PIPE
SPEC CHANGE
ELECTRICALY HEAT-TRACED AND INSULATED
INSULATED PIPE
MOTORIZED SLIDE GATE
THRUST BLOCK
BENCH MARK

MISCELLANEOUS ABBREVIATIONS

RAD. = RADIUS
W.P. = WORK POINT

ELECTRICAL ABBREVIATIONS AND SYMBOLS

C = 120 V AC CONTROL
H = HIGH VOLTAGE
P = 480 V AC POWER
X = 120 V AC POWER
SH = SHIELDED

SIZE
CONDUIT/CABLE NUMBER

EXAMPLE
480 V AC POWER, CONDUIT # 23,
SIZE 1", CABLE # 23 (IF USED)

UNDERGROUND PVC DOUBLE WALL PIPE WITH SINGLE / MULTICONDUCTOR CABLES OR WIRE
OVERHEAD CONDUIT
MOTOR, XX DENOTES HORSE POWER
THERMOSTAT
ELECTRICAL HEAT TRACE

ELECTRICAL ABBREVIATIONS

R = RACEWAY
PH = PHONE
TH = THERMOSTAT
T = TRANSFORMER
DP = POWER DISTRIBUTION PANEL
MCC = MOTOR CONTROL CENTER
JB = JUNCTION BOX
PB = PULL BOX

INSTRUMENTATION SYMBOLS

FE — FLOW ELEMENT
FI — FLOW INDICATOR - ROTOMETER
L — PILOT LIGHT (LENS G=GREEN, R=RED)
PI — PRESSURE INDICATOR
PI — PRESSURE INDICATOR WITH DIAGRAM SEAL
AE — ANALYSIS ELEMENT - TURBIDITY
TURBID. — TURB. = TURBIDITY
LE — LEVEL ELEMENT WITH LEVEL SWITCHES
ΔPS — PRESSURE SWITCH - DIFFERENTIAL

FLOW INDICATOR TRANSMITTER
FIRST LETTER
SECOND AND THIRD LETTERS
SEQUENTAIL INSTRUMENT TAG NUMBER
LOCALLY MOUNTED
BOARD MOUNTED
BEHIND BOARD MOUNTED
VENDOR SUPPLIED INSTRUMENT

INSTRUMENT DESIGNATION IDENTIFICATION LETTERS

	FIRST LETTER MEASURED OR CONTROLLED VARIABLE	SUCCEEDING LETTER(S) TYPE OF DEVICE
A	ANALYSIS	ALARM ANNUNCIATOR
B	BURNER FLAME	
C	CONDUCTIVITY	CONTROL CONTROLLER
D	DENSITY, SPECIFIC GRAVITY	DIFFERENTIAL
E	VOLTAGE (ELECTROMOTIVE FORCE)	PRIMARY ELEMENT
F	FLOW	
G		GLASS
H	HAND (MANUALLY INITIATED)	HIGH
I	CURRENT	INDICATE
J	POWER	SCAN
K	TIME OR TIME SCHEDULE	CONTROL STATION
L	LEVEL	LIGHT (PILOT), LOW
M	MOISTURE OR HUMIDITY	
N		
O		ORIFICE (RESTRICTION)
P	PRESSURE VACUUM	POINT (TEST CONNECTION)
Q	QUANTITY OR EVENT	INTEGRATE OR TOTALIZER
R		RECORD OR PRINT
S	SPEED FREQUENCY	SWITCH
T	TEMPERATURE	TRANSMIT
U	MULTIVARIABLE	MULTIFUNCTION
V	VISCOSITY	VALVE DAMP
W	WEIGHT OR FORCE	WELL
X	UNCLASSIFIED	UNCLASSIFIED
Y		RELAY, COMPUTE, CONVERTER
Z	POSITION	DRIVE

$$ — THINK VALUE ENGINEERING — $$

Revisions

Symbol	Descriptions	Date	Approved

ERM-New England, Inc.
205 Portland Street • Boston, Massachusetts

U.S. ARMY ENGINEER DISTRICT
CORPS OF ENGINEERS
OMAHA, NEBRASKA

Designed by: S.P.S.
Drawn by: D.R.S.
Checked by: S.P.S.
Reviewed by: S.C.S.
Submitted by: Chief Section

NEW BEDFORD HARBOR MASSACHUSETTS
SUPERFUND HAZARDOUS WASTE CLEANUP
HOT SPOT OPERABLE UNIT

LEGEND
SHEET 2 OF 2

Scale: As Shown
Date: DEC. 1991
Spec. No: DACW45-92-R-0020
Contract No: DACW45-92-C-0101
Drawing Code: CER47-400E-002

Environmental Resources Management, inc.
Exton, Pennsylvania 19341 • (215) 524-3500

ABBREVIATIONS

A

AB	ANCHOR BOLT
AC	ALTERNATING CURRENT
A/C	AIR CONDITIONING
ACI	AMERICAN CONCRETE INSTITUTE
ACSR	ALUMINUM CONDUCTOR STEEL REINFORCED
ACST	ACOUSTIC
AD	ACCESS DOOR
A.D.	AREA DRAIN
AFF	ABOVE FINISH FLOOR
AFFF	AQUEOUS FILM FORMING FOAM
AGG	AGGREGATE
AHU	AIR HANDLING UNIT
A.I.	AREA INLET
AIC	AMPS INTERRUPTING CAPACITY (SYM RMS)
AISC	AMERICAN INSTITUTE of STEEL CONSTRUCTION
AL	ALUMINUM
A.L.	ACTIVE LEAF
ALT	ALTERNATE
AMP	AMPERE
ANSI	AMERICAN NATIONAL STANDARDS INSTITUTE
AP	ACCESS PANEL
APPD	APPROVED
APPROX.	APPROXIMATE
ARCH	ARCHITECTURAL OR ARCHITECT
A.R.I.	AMERICAN REFRIGERATION INSTITUTE
ASB	ASBESTOS
ASPH	ASPHALT
ATC	ACOUSTICAL TILE CEILING
AUTO	AUTOMATIC
AVG	AVERAGE
AWC	ACOUSTICAL WALL COVERING
AWG	AMERICAN WIRE GAUGE
∠	ANGLE

B

BATT INSUL	BATT INSULATION
BB	BULLETIN BOARD
BC	BOOKCASE
BD	BOARD
BDY	BOUNDARY
BEJ	BRICK EXPANSION JOINT
BIT	BITUMINOUS
BL	BUILDING LINE
BLDG	BUILDING
BLK	BLOCK
BLKG	BLOCKING
BM	BEAM
B.M.	BENCH MARK
B.O.	BOTTOM OF
BOT	BOTTOM
BRCG	BRACING
BRDG	BRIDGING
BRG	BEARING
BRK	BRICK
BRKT	BRACKET
BT	BENT
BTU	BRITISH THERMAL UNIT
BTUH	BTU PER HOUR
BUR	BUILT-UP ROOFING

C

C	CARPET (ARCH. SHTS.)
C or CND	CONDUIT (FOR RACEWAY-ELEC. SHTS)
CAP	CAPACITY
cc or C to C	CENTER TO CENTER
CB	CATCH BASIN (OR CIRCUIT BREAKER)
CE	COVER ELEVATION
CEM	CEMENT
CFM	CUBIC FEET PER MINUTE
CHIM	CHIMNEY
C.I.	CURB INLET
CI	CAST IRON
CIR	CIRCULAR
CJ	CONTROL JOINT
CKD	CHECKED
CKT	CIRCUIT
CKT BKR or CB	CIRCUIT BREAKER
℄ or CL	CENTER LINE
CLG	CEILING
CLKG	CALKING
CLO	CLOSET
CLOS	CLOSED
CL WG	CLEAR WIRE GLASS
CMP	CORRUGATED METAL PIPE
CMU	CONCRETE MASONRY UNITS
CNTR	COUNTER
CO	CLEANOUT
CO_2	CARBON DIOXIDE
COL	COLUMN
COM	COMMON

C (cont.)

COMB	COMBINATION
COMB	COMBUSTION
COMP	COMPRESSIBLE
CONC.	CONCRETE
CONN	CONNECTION
CONSTR	CONSTRUCTION
CONSTR JT.	CONSTRUCTION JOINT
CONT	CONTINUOUS
COR	CORNER
CORR	CORRIDOR
COV	COVERED
CPL	CEMENT PLASTER
C.P.S.	CYCLES PER SECOND (HERTZ)
CRES	CORROSIVE RESISTANT STEEL
CRG	CARRIAGE
CRSE	COURSE
CS	COUNTER SINK
CSMT	CASEMENT
CT	CERAMIC TILE or CURRENT TRANSFORMER
CTL	CARPET TILE
CTR	CENTER
CU	CONDENSING UNIT
CUH	CABINET UNIT HEATER
CU YD	CUBIC YARDS
CV	CEILING VENT
CW	COLD WATER
CYL	CYLINDER

D

d	PENNY (as in nail - 10d)
D	DATUM
DA	DOUBLE ACTING
DB	DRY BULB
DBL	DOUBLE
DC	DIRECT CURRENT
D.C.J.	DOWELED CONTROL JOINT
DCJT	DUMMY CONTOL JOINT
DCL	DOOR CLOSER
DEG	DEGREE
DEPR	DEPRESSION
DEPT	DEPARTMENT
DET	DETAIL
DF	DRINKING FOUNTAIN
DH	DOUBLE HUNG
DH	DUCT HEATER
DIA or ø	DIAMETER
DIAG	DIAGONAL
DIM	DIMENSION
DISC	DISCONNECT
DIST	DISTRIBUTION
D & M	DRESSED & MATCHED
DN	DOWN
DP	DAMPPROOFING
DR	DOOR
DRN	DRAIN
DS	DOWN SPOUT
DWG	DRAWING
DWLS	DOWELS
DX	DIRECT EXPANSION

E

E	EAST
EA.	EACH
EA	EXHAUST AIR
EAT	ENTERING AIR TEMPERATURE
EJ	EXPANSION JOINT
EL or ELEV.	ELEVATION - GRADE OR BUILDING
ELEC.	ELECTRIC or ELECTRICAL
EMD	ESTIMATED MAXIMUM DEMAND
ENCL	ENCLOSURE
ENT	ENTRANCE
E.P.	EXPLOSION PROOF
EQ.	EQUAL
EQUIP.	EQUIPMENT
EST	ESTIMATE
EWC	ELECTRIC WATER COOLER
EWT	ENTERING WATER TEMPERATURE
EXC.	EXCAVATE
EXD	EXIT DEVICE
EXH	EXHAUST
EXIST.	EXISTING
EXP	EXPOSED
EXPL	EXPLOSION
EXPN	EXPANSION
EXT	EXTERIOR

F

F	FAHRENHEIT
FA	FRESH AIR
FC	FOOT CANDLE
FCG	FACING
FCJ	FLOOR CONSTRUCTION JOINT
FD	FLOOR DRAIN
F.D.	FIRE DAMPER
FDN	FOUNDATION
FE	FIRE EXTINGUISHER
FEB	FIRE EXTINGUISHER BRACKET
FEC	FIRE EXTINGUISHER CABINET
FH	FIRE HYDRANT
FHC	FIRE HOSE CABINET
FIG.	FIGURE
FIN.	FINISH
FIX.	FIXTURE
FL or FLR	FLOOR
FLASH	FLASHING
FLEX	FLEXIBLE
FLG	FLOORING
FLUOR	FLUORESCENT
FP	FIRE PROTECTION
FPM	FEET PER MINUTE
FPRF	FIRE PROOF
FR	FRAME
FRG	FURRING
F.S.	FULL SIZE
FT.	FEET
FTG.	FOOTING
FW	FIRE WATER
FWC	FABRIC WALL COVERING

G

G	GAS
GA	GAGE or GAUGE
GAL	GALLON
GALV	GALVANIZED
G.C.O.	GROUND CLEANOUT
GEN	GENERAL
GFE/CI	GOVERNMENT FURNISHED EQUIPMENT CONTRACTOR INSTALLED
GFE/GI	GOVERNMENT FURNISHED EQUIPMENT GOVERNMENT INSTALLED
GFE	GOVERNMENT FURNISHED EQUIPMENT
G.F.I. or GFI	GROUND FAULT INTERRUPTOR
GI	GALVANIZED IRON
GL	GLASS
GND or GRND	GROUND
GOVT.	GOVERNMENT
GPM	GALLONS PER MINUTE
GR	GRADE
GRS	GALVANIZED RIGID STEEL CONDUIT
GRTG	GRATING
GSU	GRAZED STRUCTURAL UNITS
GWB	GYPSUM WALLBOARD
GWT	GLAZED WALL TILE
GYP	GYPSUM

H

HB	HOSE BIBB
HBD	HARDBOARD
HC	HANDICAPPED
HCD	HALON CONTAINMENT DAMPER
HD	HEAD
HDR	HEADER
HDRL	HANDRAIL
HDW	HARDWARE
HM	HOLLOW METAL
HP	HORSE POWER
HIP	HIGH PRESSURE
H.PT.	HIGH POINT
HR	HOUR
H.S.	HIGH STRENGTH
HSGYP	HIGH - STRENGHT GYPSUM PLASTER
HT	HEIGHT
HTG	HEATING
HTR	HEATER
HW	HOT WATER
HWH	HOT WATER HEATER
HYD	HYDRAULIC
Hz	HERTZ

I

I or EF	IRON
IC	INTERCOM
I.D.	INSIDE DIAMETER
IES	ILLUMINATING ENGINEERING SOCIETY
IN	INCH
INSUL.	INSULATION
INT.	INTERIOR
INV.	INVERT or INVERTER
I.P.	IRON PIPE

J

JB or J-BOX	JUNCTION BOX
JC	JANITOR CLOSET
JCT	JUNCTION
JST	JOIST
JT	JOINT

K

K	KEY
kcmil or KCM	KILO CIRCULAR MIL
KCP	KEENE'S CEMENT PLASTER
KIP	KILOPOUND (1000 LBS)
KIT	KITCHEN
KL	KEY LOCK
KP	KICK PLATE
kV	KILOVOLTS
kVA	KILOVOLT AMPERES
kvar	KILOVOLT AMPERES REACTIVE
kW	KILOWATT

L

L	LUMEN
LAB	LABORATORY
LAT	LEAVING AIR TEMPERATURE
LAU	LAUNDRY
LAV	LAVATORY
LBR	LUMBER
LBS	POUNDS
LD	LOAD
LDG	LOADING
LG	LENGTH
LIN	LINEAR
LIS	LAWN IRRIGATION SYSTEM
LNTL	LINTEL
LONG	LONGITUDINAL
LP	LOW POINT
LPS	LIGHT PROOF SHADE
LR	LIVING ROOM
L.R.	LONG RADIUS
LT	LIGHT
LTG	LIGHTING
LT. WT.	LIGHT WEIGHT
LWT	LEAVING WATER TEMPERATURE

M

M	THOUSAND
MACH	MACHINE
MAS	MASONRY
MAT or MATL	MATERIAL
MAX	MAXIMUM
M & B	MATCHED & BEADED
MC	MEDICINE CABINET
MCJ	MASONRY CONTROL JOINT
MECH	MECHANICAL
MER	MECHANICAL EQUIPMENT ROOM
MET.	METAL
MFG	MANUFACTURING
MFR	MANUFACTURE
MG	MOTOR GENERATOR
MGT	MATTE - GLAZED TILE
MH	MANHOLE
MIN	MINIMUM
ML	METAL LATH
MLDG	MOULDING
MO	MASONRY OPENING
MONO	MONOLITHIC
MOT	MOTOR
MSTC	MASTIC
MT	METAL THRESHOLD
MTD	MOUNTED

N

N	NORTH
N.C.	NORMALLY CLOSED
NEC	NATIONAL ELECTRICAL CODE
NEMA	NATIONAL ELECTRICAL MANUFACTURERS ASSOCIATION
NFPA	NATIONAL FIRE PROTECTION ASSOCIATION
NIC	NOT IN CONTRACT
NU	NUMBER
N.O.	NORMALLY OPEN
N.R.	NOT REQUIRED

O

OA	OUTSIDE AIR
OBGL	OBSCURE GLASS
OBSC	OBSURE
OB WG	OBSCURE WIRE GLASS
OC	ON CENTERS
OCEW	ON CENTER EACH WAY
OD	OUTSIDE DIAMETER
OFF.	OFFICE
OH	OVERHEAD
OPNG	OPENING
OPP	OPPOSITE
OPS	OPERATIONS
O.R.	OBSERVATION RISER
OS & Y	OUTSIDE SCREW & YOKE

P

P	POLE
PA	PUBLIC ADDRESS
PBS	PUSH BUTTON STATION
PC	PIECE
PD	PAVEMENT DRAIN
PERF	PERFORATED
PH or ø	PHASE
PHAR	PHARMACY
PI	POINT OF INTERSECTION
P.I.V.	POST INDICATING VALVE
PL or ℙ	PLATE
PLAS	PLASTER
PLAS. LAM.	PLASTIC LAMINATE
PLATF	PLATFORM
PLBG	PLUMBING
PLG	PILING
PLY. WD.	PLYWOOD
PNL	PANEL
POL	POLISH
PORC	PORCELAIN
P.P.M.	PARTS PER MILLION
PR	PAIR
PREFAB	PREFABRICATED
PREFIN	PREFINISHED
PROJ	PROJECT
PRV	PRESSURE REGULATING VALVE
P.S.	PRESSED STEEL
PSF	POUNDS/SQUARE FOOT
PSI	POUNDS/SQUARE INCH
PT	POINT or POTENTIAL (VOLTAGE) TRANSFORMER
PTD	PAINTED
PTN	PARTITION
PVC	POLYVINYL-CHLORIDE
PVMT	PAVEMENT
PW	PASS WINDOW

Q

QT	QUART
Q.T.	QUARRY TILE
QTRS	QUARTERS
1/4 RD	QUARTER ROUND

R

R or RSR	RISER
RA	RETURN AIR
RAD or R	RADIUS
RAG	RETURN AIR GRILLE
RAR	RETURN AIR REGISTER
RB	RESILIENT BASE
RC	REMOTE CONTROL
RCVR	RECEIVER
RD	ROUND
R.D.	ROOF DRAIN
RDGE	RIDGE
RECP	RECEPTACLE
RECR	RECREATION
RECT.	RECTIFIER
REF	REFERENCE
REFR	REFRIGERATOR
REG	REGISTER
REINF	REINFORCEMENT
REM	REMOVABLE
REQD	REQUIRED
RESIL.	RESILIENT
REV	REVISIONS
RFG	ROOFING
RGE	RANGE
RGH	ROUGH
RH	RELATIVE HUMIDITY
RM	ROOM
RPM	REVOLUTIONS PER MINUTE
RPRT	RAISED PATTERN RUBBER TILE
RUB	RUBBER

S

S	SOUTH
SA	SUPPLY AIR
SB	SPLASH BLOCK
S.B.	SECURITY BARS
SCH	SCHEDULE
SCR	SCREW
SCT	STRUCTURAL CLAY TILE
SCUT	SCUTTLE
S.D.	SUBDRAIN
SDI	STEEL DECK INSTITUTE
SJI	STEEL JOIST INSTITUTE
SECT	SECTION
SECY	SECRETARY
SEQ	SEQUENCE
SFU	STRUCTURAL FACING UNIT
SHLD.	SHOULDER
SHT.	SHEET
SHTG	SHEATHING
SIM	SIMILAR
SOV	SHUT OFF VALVE
SP	STATIC PRESSURE
SPEC	SPECIFICATIONS
SPF	SOUNDPROOF
SPH	SPACE HEATER
SPKR	SPEAKER
SPL	SPECIAL
SQ or □	SQUARE
SQUAD	SQUADRON
SSMR	STANDING SEAM METAL ROOFING
S. STL.	STAINLESS STEEL
STA	STATION
STD	STANDARD
STGR	STRINGER
STL	STEEL
STN	STONE
STOR	STORAGE
STR	STRUCTURAL
STWY	STAIRWAY
SUB FL	SUB FLOOR
SUSP	SUSPENDED
SVF	SHEET VINYL FLOORING
SW	SWITCH
SWBD	SWITCHBOARD
SYM	SYMMETRICAL

T

T	TREAD
TAN.	TANGENT
TBD	TACK BOARD
TEL	TELEPHONE
TEMP	TEMPERATURE
TER	TERRAZZO
TERM	TERMINAL
TGL	TOGGLE
TH	THRESHOLD
THK	THICK
T.O.	TOP OF
TOIL	TOILET
TOPO	TOPOGRAPHY
TRANS	TRANSVERSE
T'STAT	THERMOSTAT
TV	TELEVISION
TYP	TYPICAL

U

UC	UNIT COOLER
UG	UNDERGROUND
UH	UNIT HEATER
UL	UNDERWRITERS LABORATORIES
UNEX	UNEXCAVATED
UNFIN	UNFINISHED
UPS	UNINTERRUPTABLE POWER SYSTEM
UR	URINAL
UT	UTILITY
UV	UNIT VENTILATOR

V

V	VOLT
VCP	VITRIFIED CLAY PIPE
VCT	VINYL COMPOSTION TILE
VD	VAULT DOOR
VENT	VENTILATION
VENT	VENTILATOR
VERT	VERTICAL
VEST	VESTIBULE
VOL	VOLUME
VS	VENT STACK
VT	VINYL-TILE OR VOLTAGE TRANSFORMER
VTR	VENT THRU ROOF
VWC	VINYL-WALL COVERING

W

W	WEST
W	WIRE
W/	WITH
WB	WET BULB
WC	WATER CLOSET
WD	WOOD
W.D.	WASTE DRAIN
WD. BLK.	WOOD BLOCKING
WD. DR.	WOOD DOOR
WDW	WINDOW
WF	WIDE FLANGE
WG	WIRE GLASS
WH	WALL HYDRANT
WHM	WATTHOUR METER
WHT	WHITE
W.I.	WROUGHT IRON
WKSH	WORK SHOP
WNSCT	WAINSCOT
W/O	WITHOUT
WP	WEATHER PROOF
WPF	WATER PROOF
WPFG	WATER PROOFING
WRB	WARDROBE
WS	WASTE STACK
WT	WEIGHT
WWF	WELDED WIRE FABRIC
WWM	WOVEN WIRE MESH

X

XFMR	TRANSFORMER

Y

YD	YARD
Y.D.	YARD DRAIN

$$ — THINK VALUE ENGINEERING — $$

Revisions

Symbol	Descriptions	Date	Approved

The ERM Group — ERM-New England, inc. — 205 Portland Street • Boston, Massachusetts

U.S. ARMY ENGINEER DISTRICT
CORPS OF ENGINEERS
OMAHA, NEBRASKA

Designed by: S.P.S.
Drawn by: W.C.H.
Checked by: S.P.S.
Reviewed by: S.C.S.
Submitted by: Chief Section

NEW BEDFORD HARBOR MASSACHUSETTS
SUPERFUND HAZARDOUS WASTE CLEANUP
HOT SPOT OPERABLE UNIT

ABBREVIATIONS

Scale: As Shown
Date: DEC. 1991
Spec. No. DACW45-92-R-0020
Contract No. DACW45-92-C-0101
Drawing Code: **CER47-400E-003**

Environmental Resources Management, inc.
Exton, Pennsylvania 19341 • (215) 524-3500

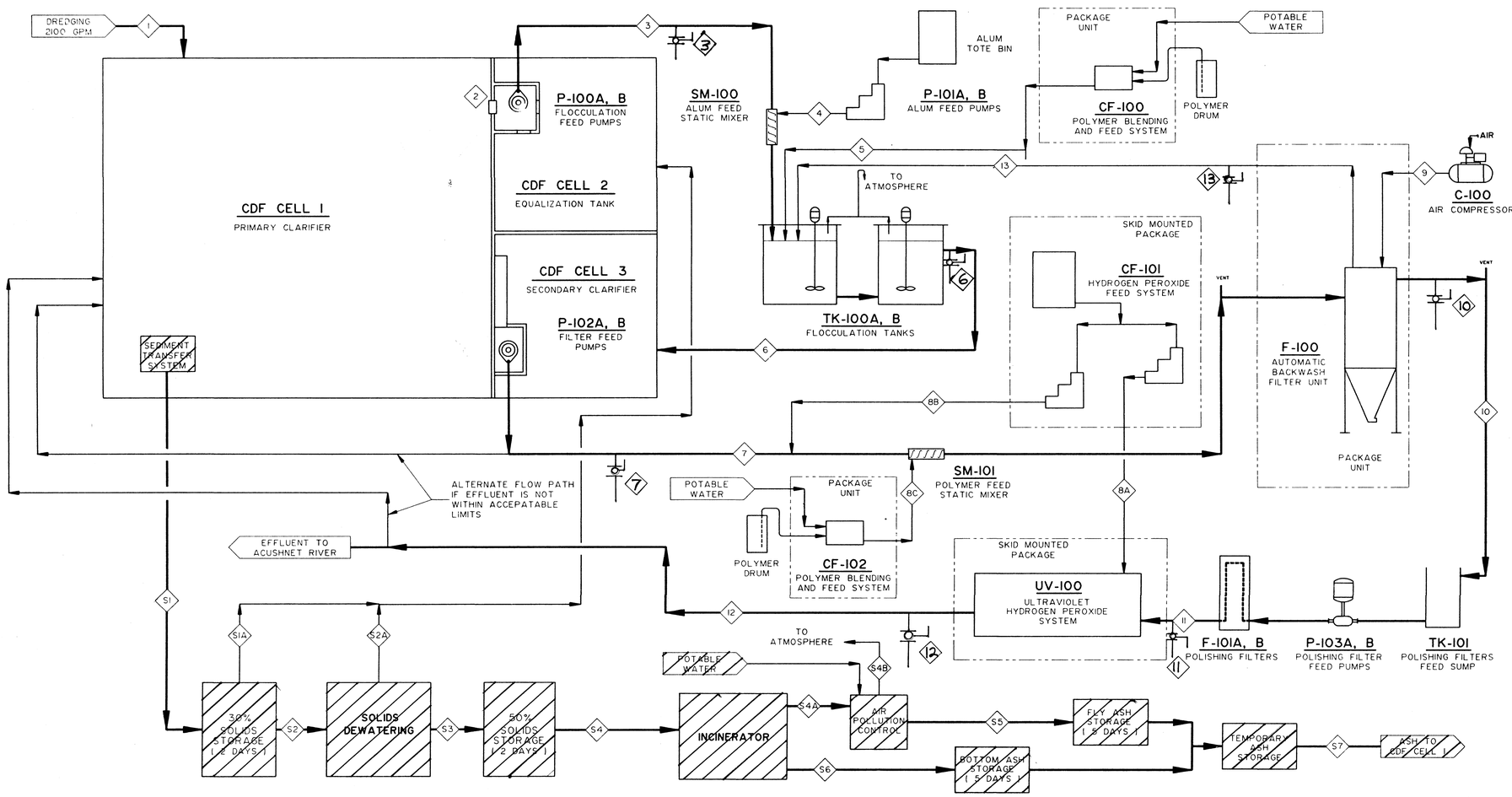

BASIS OF DESIGN

10,000 CU. YD. TOTAL IN-SITU SEDIMENTS TO BE DREDGED AND DEPOSITED IN CDF CELL No. 1. DREDGING OCCURS 2 TO 6 HOURS PER DAY (4 HOURS/DAY AVERAGE) FOR 80 DAYS.

WASTEWATER IS DECANTED FROM CDF CELL No. 1 TO CDF CELL No. 2 AT A MAXIMUM FLOW RATE OF 2,100 GPM, AND IS PUMPED TO TREATMENT AT THE DESIGN AVERAGE RATE OF 350 GPM.

WASTEWATER TREATMENT SYSTEM IS DESIGNED TO MAXIMIZE REMOVAL OF PCBS BY REMOVING SUSPENDED SOLIDS TO WHICH THEY ARE ATTACHED. SOLIDS ARE ALLOWED TO ACCUMULATE IN CDF CELL No. 3 UNTIL THE SLUDGE LEVEL REACHES APPROXIMATELY 2 FEET. SLUDGE IS THEN WITHDRAWN BY A TEMPORARY SLUDGE PUMP AND RETURNED TO CDF CELL No. 1. ULTRAVIOLET/PEROXIDE TREATMENT DESTROYS DISSOLVED OR FINE PARTICULATE PCB MATERIAL REMAINING IN WASTEWATER.

SOLIDS TREATMENT FOLLOWS COMPLETION OF DREDGING AND WASTEWATER TREATMENT OPERATIONS. SOLIDS ARE DREDGED FROM CDF CELL No. 1 DURING AN EIGHT HOUR PERIOD EACH DAY. DEWATERED SOLIDS ARE FED CONTINUOUSLY TO THE INCINERATOR.

EACH DAY'S PRODUCTION OF ASH IS STORED SEPARATELY UNTIL TCLP ANALYSIS IS COMPLETE. ASH PASSING TCLP IS MOVED TO TEMPORARY ASH STORAGE, AND ASH FAILING TCLP IS STABILIZED PRIOR TO MOVING TO TEMPORARY STORAGE.

FINAL ASH DISPOSAL IS TO BE PLACED IN CDF CELL No. 1 FOLLOWING REMOVAL OF ALL CONTAMINATED SEDIMENTS FROM THE CDF.

INDICATES SAMPLE POINTS

INDICATES ELIMINATED BY MOD NO 39

WATER TREATMENT MASS BALANCE

	1 DREDGING FLOW *	2 EQUALIZATION INFLUENT	3 EQUALIZATION EFFLUENT	4 ALUM FEED	5 POLYMER FEED (IF NEEDED)	6 FLOCCULATOR EFFLUENT	7 CLARIFIER EFFLUENT	8A PEROXIDE FEED	8B PEROXIDE FEED	8C POLYMER FEED (IF NEEDED)	9 COMPRESSED AIR	10 FILTER EFFLUENT	11 POLISHING FILTER EFFLUENT	12 UV/ OXIDATION EFFLUENT	13 FILTER REJECTS
DESIGN AVG.FLOW (GPM)	2,100	2,100	350	1.4 (GPH)	21 (GPH)	368	368	2 (GPH)	2 (GPH)	10 (GPH)	4 (SCFM)	350	350	350	18
TSS CONCENTRATION (PPM)	50,000	600	600	-	-	2,695	100	-	-	-	-	5	3	3	1,949
MASS FLOW-WATER (LB/DAY)	3,988,404	3,988,404	3,988,404	375	4,200	4,418,712	4,418,712	442	442	4,200	-	4,197,776	4,197,776	4,197,776	215,914
MASS FLOW-TSS (LB/DAY)	209,916	2,393	2,393	-	-	11,910	442	-	-	-	-	21	10	10	421
PCB (PPB)	3,857,000	49,000	49,000	-	-	51,294	2,800	-	-	-	-	533	320	< 1.5	46,940
HEAVY METALS (PPB)	141,000	4,874	4,874	-	-	4,880	114	-	-	-	-	114	114	114	114
IRON (PPM)	-	41	41	-	-	47	12	-	-	-	-	6	2	2	129
PAH (PPB)	23	3	3	-	-	3	1	-	-	-	-	1	1	<1	1

* = FLOW IS BASED ON AN AVERAGE OF FOUR (4) HOURS A DAY FOR FIVE DAYS IN A WEEK.

SOLIDS TREATMENT MASS BALANCE

	S1 SEDIMENT TRANSFER FLOW **	S1A STORAGE DRAIN	S2 DEWATERING INFLUENT	S2A FILTRATE RETURN	S3 DEWATERING EFFLUENT	S4 INCINERATOR FEED	S4A FLUE GAS	S4B EXIT GAS	S5 FLY ASH	S6 BOTTOM ASH	S7 ASH TO DISPOSAL
TOTAL WASTE FLOW (LB/HR)	77,726	2,357	23,569	9,569	14,000	14,000	64,670	108,192	1,370	6,520	7,872
WASTE FLOW-SOLIDS (LB/HR)	21,919	236	7,071	71	7,000	7,000	685	-	685	6,313	6,998
WASTE FLOW-WATER (LB/HR)	55,889	2,121	16,498	9,498	7,000	7,000	57,650	57,650	685	189	874
FUEL (LB/HR NATURAL GAS)	-	-	-	-	-	2,543	-	-	-	-	-
COMBUSTION AIR	-	-	-	-	-	54,302	-	-	-	-	-
QUENCH WATER	-	-	-	-	-	44,861	-	-	-	-	-
PCB (PPM)	21,723	7,708	23,125	570	38,541	38,541			0	< 5	< 5
HEAVY METALS (µG/L)	777,427	275,861	827,583	20,364	1,379,305	1,379,305			2,114,264	2,524,262	2,452,911

** = BASED ON 8 HOURS PER DAY OPERATION

ALAN F. HASSETT CIVIL No. 30702 COMMONWEALTH OF MASSACHUSETTS REGISTERED PROFESSIONAL ENGINEER

JAMES D. FITZGERALD SANITARY No. 35804 COMMONWEALTH OF MASSACHUSETTS REGISTERED PROFESSIONAL ENGINEER

Environmental Resources Management, inc.
Exton, Pennsylvania 19341 • (215) 524-3500

$$ — THINK VALUE ENGINEERING — $$

Revisions

Symbol	Descriptions	Date	Approved

ERM-New England, Inc.
205 Portland Street • Boston, Massachusetts

U.S. ARMY ENGINEER DISTRICT
CORPS OF ENGINEERS
OMAHA, NEBRASKA

Designed by: SPS.
Drawn by: J.A.H.
Checked by: SPS.
Reviewed by: SCS
Submitted by: Chief Section

NEW BEDFORD HARBOR MASSACHUSETTS
SUPERFUND HAZARDOUS WASTE CLEANUP
HOT SPOT OPERABLE UNIT
PROCESS FLOW DIAGRAM

Scale: As Shown
Date: DEC. 1991
Spec. No.: DACW45-92-R-0020
Contract No.: DACW45-92-C-0101
Drawing Code: **CER47-400E-101**

ME-101	TK-103	P-105	P-101A, 101B	SM-100	CF-100
COMBINATION STEAM CLEANER AND PRESSURE WASHER	DECONTAMINATION PAD SUMP	DECONTAMINATION PAD SUMP PUMP	ALUM FEED PUMPS	ALUM FEED STATIC MIXER	POLYMER BLENDING AND FEED SYSTEM
4 GPM @ 60 PSIG 1-1/2 HP 3 ø, 460 V		25 GPM 2 HP 3 ø, 460 V	0 GPH TO 8 GPH 1/3 HP 1 ø, 115 V	6" ø PVC - 3 VANES	0 TO 30 GPH DILUTED POLYMER

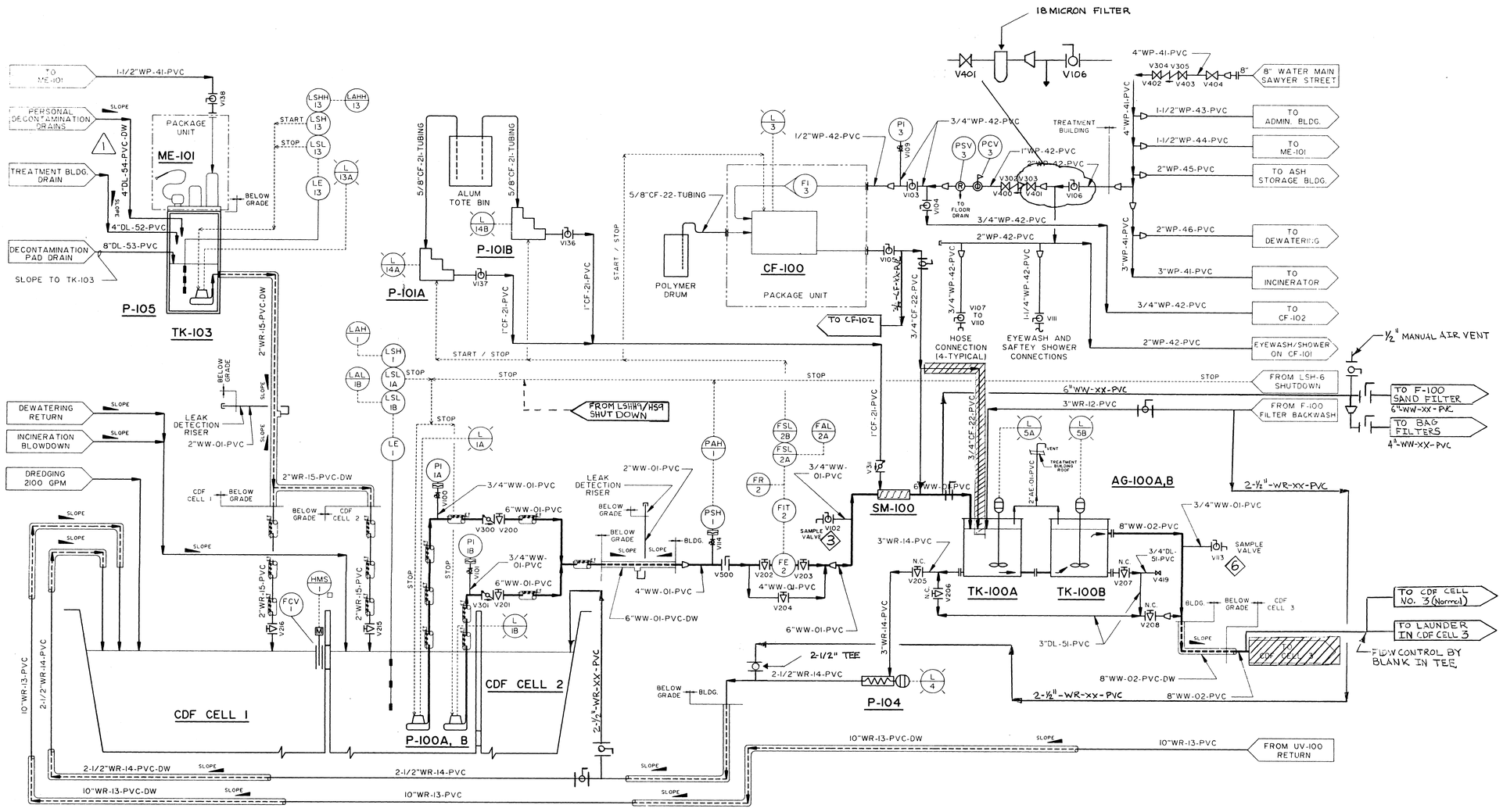

CDF CELL 1	CDF CELL 2	P-100A, 100B	P-104	TK-100A, 100B	AG-100A, 100B
PRIMARY CLARIFIER	EQUALIZATION TANK	FLOCCULATION FEED PUMPS	TRANSFER PUMP	FLOCCULATION TANKS	FLOCCULATION TANK AGITATORS
4,600,000 GALLONS	680,000 GALLONS	350 GPM @ 51 FT. TDH 10 HP, 1750 RPM 3 ø, 230 / 460 V	20 GPM @ 0 TO 40 PSI 1-1/2 HP 3 ø, 230 / 460 V	(2) 9 FT. x 9 FT. x 7 FT. 316 STAINLESS STEEL - WITH 1/2" THICK REINFORCED FIBERGLASS TOP LOVER (2) 3,030 GALLONS	1 HP, 320 RPM, 3 ø, 230 / 460 V

$$ — THINK VALUE ENGINEERING — $$

Revisions

Symbol	Descriptions	Date	Approved
1	REVISED IN ACCORDANCE WITH AM NO. 0007	3-18-92	A.F.H

ERM-New England, Inc.
205 Portland Street • Boston, Massachusetts

U.S. ARMY ENGINEER DISTRICT
CORPS OF ENGINEERS
OMAHA, NEBRASKA

Designed by: S.P.S.
Drawn by: J.HACHE
Checked by: S.P.S.
Reviewed by: SCS
Submitted by: Chief, Section

NEW BEDFORD HARBOR, MASSACHUSETTS
SUPERFUND HAZARDOUS WASTE CLEANUP
HOT SPOT OPERABLE UNIT

PIPING & INSTRUMENTATION DIAGRAM
SHEET 1 OF 2

Scale: As Shown
Date: DEC. 1991
Spec. No.: DACW45-92-R-0020
Contract No.: DACW45-92-C-0101
Drawing Code: CER47-400E-III

Environmental Resources Management, inc.
Exton, Pennsylvania 19341 • (215) 524-3500

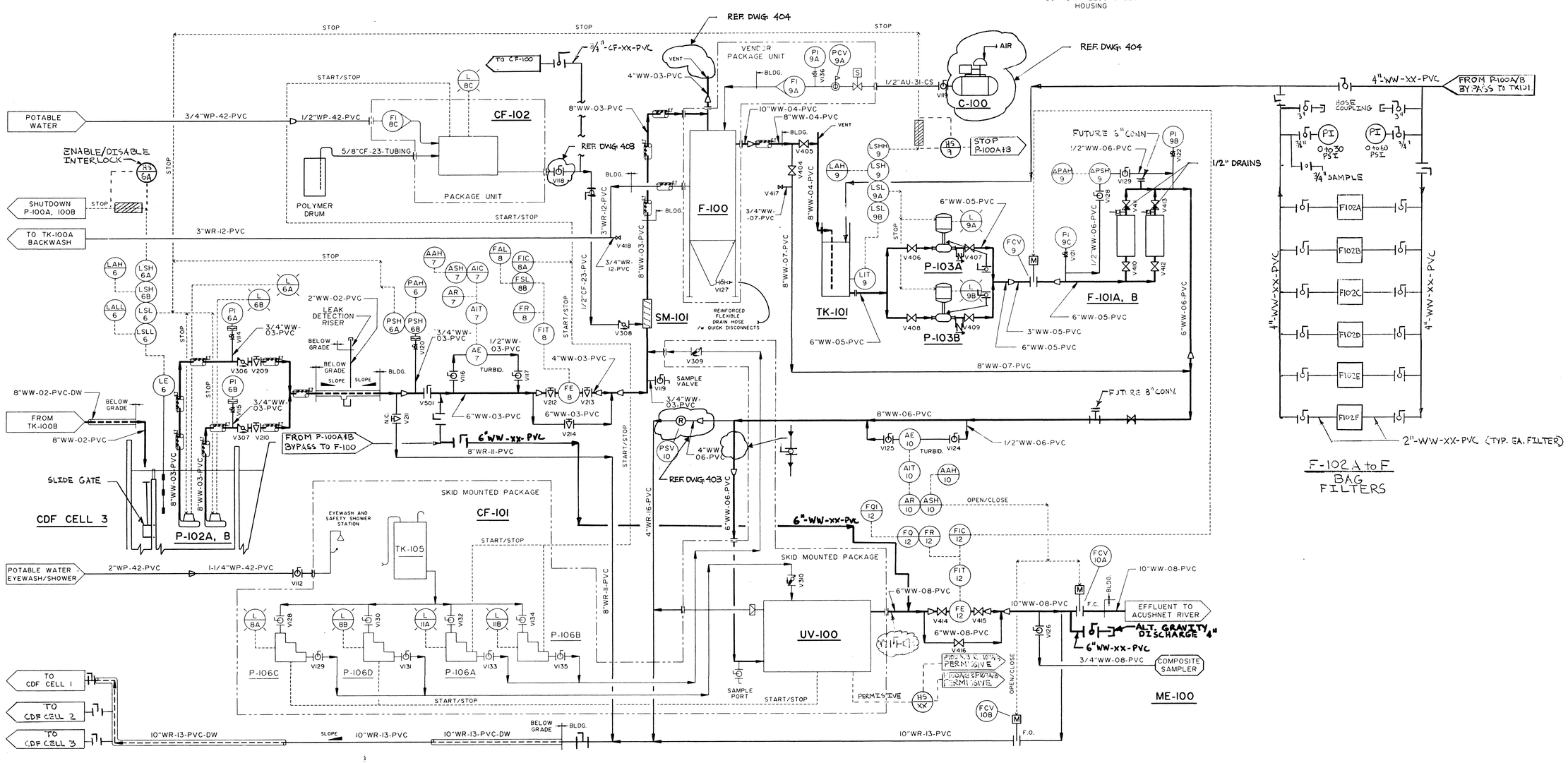

CDF CELL 3	P-102A, 102B	CF-101	F-100	UV-100	P-103A, 103B	ME-100
SECONDARY CLARIFIER	FILTER FEED PUMPS	HYDROGEN PEROXIDE FEED SYSTEM	AUTOMATIC BACKWASH FILTER UNIT	ULTRAVIOLET HYDROGEN PEROXIDE SYSTEM	POLISHING FILTER FEED PUMPS	COMPOSITE SAMPLER
460,000 GALLONS	375 GPM @ 72 FT. TDH 15 HP, 1750 RPM 3 ø, 230 / 460 V	2,500 GALLON TANK 1/3 HP, 1 ø, 120 V PUMPS	9 FT. DIA. 6.0 GPM / SQ. FT.	350 GPM 3 ø, 480 V, 400 KVA	350 GPM @ 130 FT. TDH 20 HP, 1750 RPM, 3 ø, 230 / 460 V	1 ø, 115 V

$$ — THINK VALUE ENGINEERING — $$

Revisions

Symbol	Descriptions	Date	Approved

ERM-New England, Inc.
205 Portland Street • Boston, Massachusetts

U.S. ARMY ENGINEER DISTRICT
CORPS OF ENGINEERS
OMAHA, NEBRASKA

Designed by: S.P.S.
Drawn by: J.HACHE
Checked by: S.P.S.
Reviewed by: SCS
Submitted by: Chief, Section

NEW BEDFORD HARBOR MASSACHUSETTS
SUPERFUND HAZARDOUS WASTE CLEANUP
HOT SPOT OPERABLE UNIT
PIPING & INSTRUMENTATION DIAGRAM
SHEET 2 OF 2

Scale: As Shown
Date: DEC. 1991
Spec. No. DACW45-92-R-0020
Contract No. DACW45-92-C-0101
Drawing Code: CER47-400E-112

Environmental Resources Management, inc.
Exton, Pennsylvania 19341 • (215) 524-3500

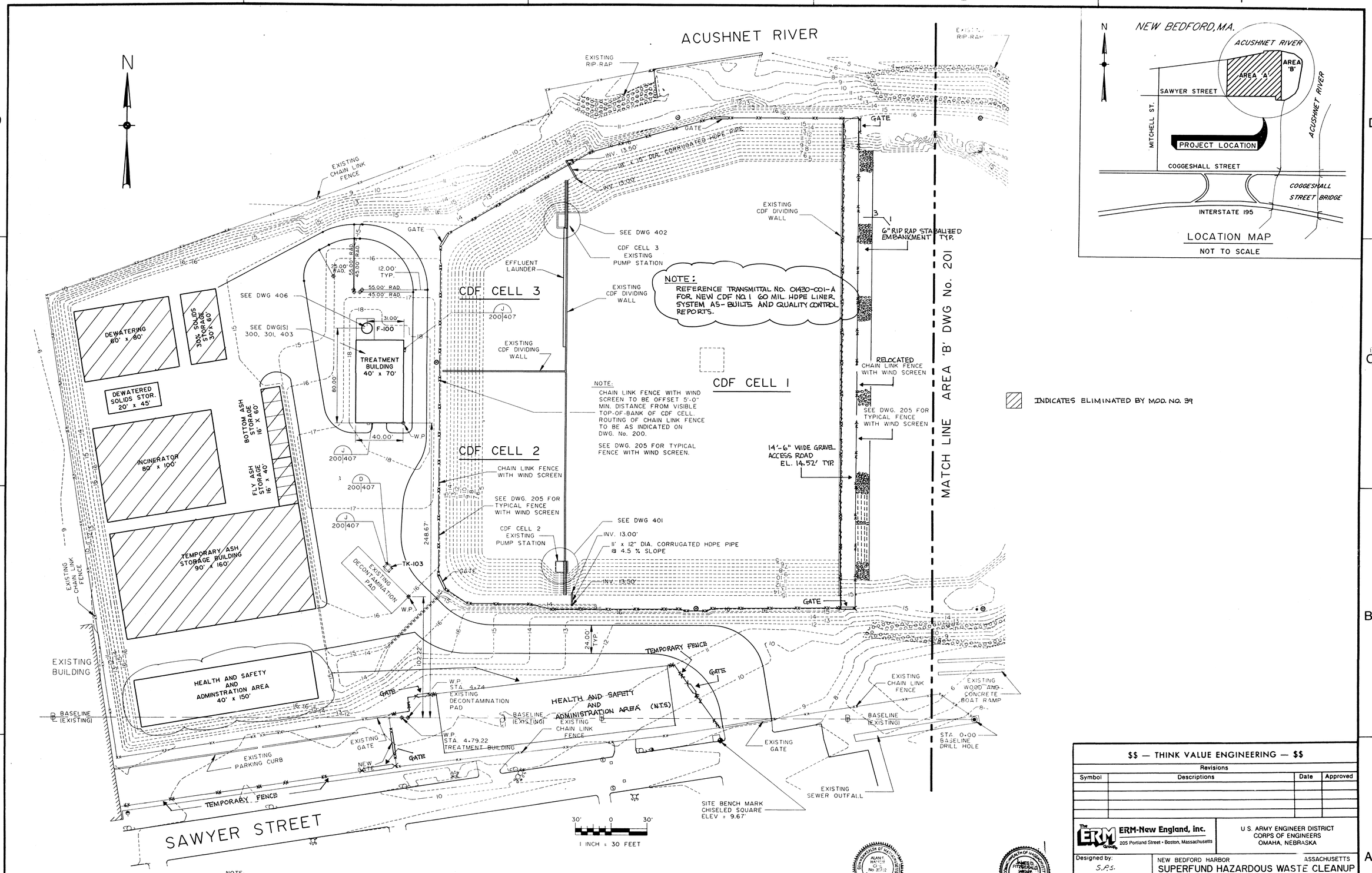

NOTE:

1. REFER TO SECTION 01500 FOR TEMPORARY FACILITIES FOR "HEALTH AND SAFETY AND ADMINISTRATION AREA".
2. REFER TO SECTION 11181 - SUB SECTION 5 FOR DEWATERING, INCINERATION AND FLY ASH INFORMATION.

$$ — THINK VALUE ENGINEERING — $$

Revisions

Symbol	Descriptions	Date	Approved

ERM-New England, Inc.
205 Portland Street • Boston, Massachusetts

U.S. ARMY ENGINEER DISTRICT
CORPS OF ENGINEERS
OMAHA, NEBRASKA

Designed by: S.P.S.
Drawn by: J.A.H.
Checked by: S.P.S.
Reviewed by: SCS
Submitted by: Chief Section

NEW BEDFORD HARBOR ASSACHUSETTS
SUPERFUND HAZARDOUS WASTE CLEANUP
HOT SPOT OPERABLE UNIT
SITE LAYOUT

Scale: As Shown
Date: DEC. 1991
Spec. No.: DACW45-92-R-0020
Contract No.: DACW45-92-C-0101
Drawing Code: **CER47-400E-200**

Environmental Resources Management, inc.
Exton, Pennsylvania 19341 • (215) 524-3500

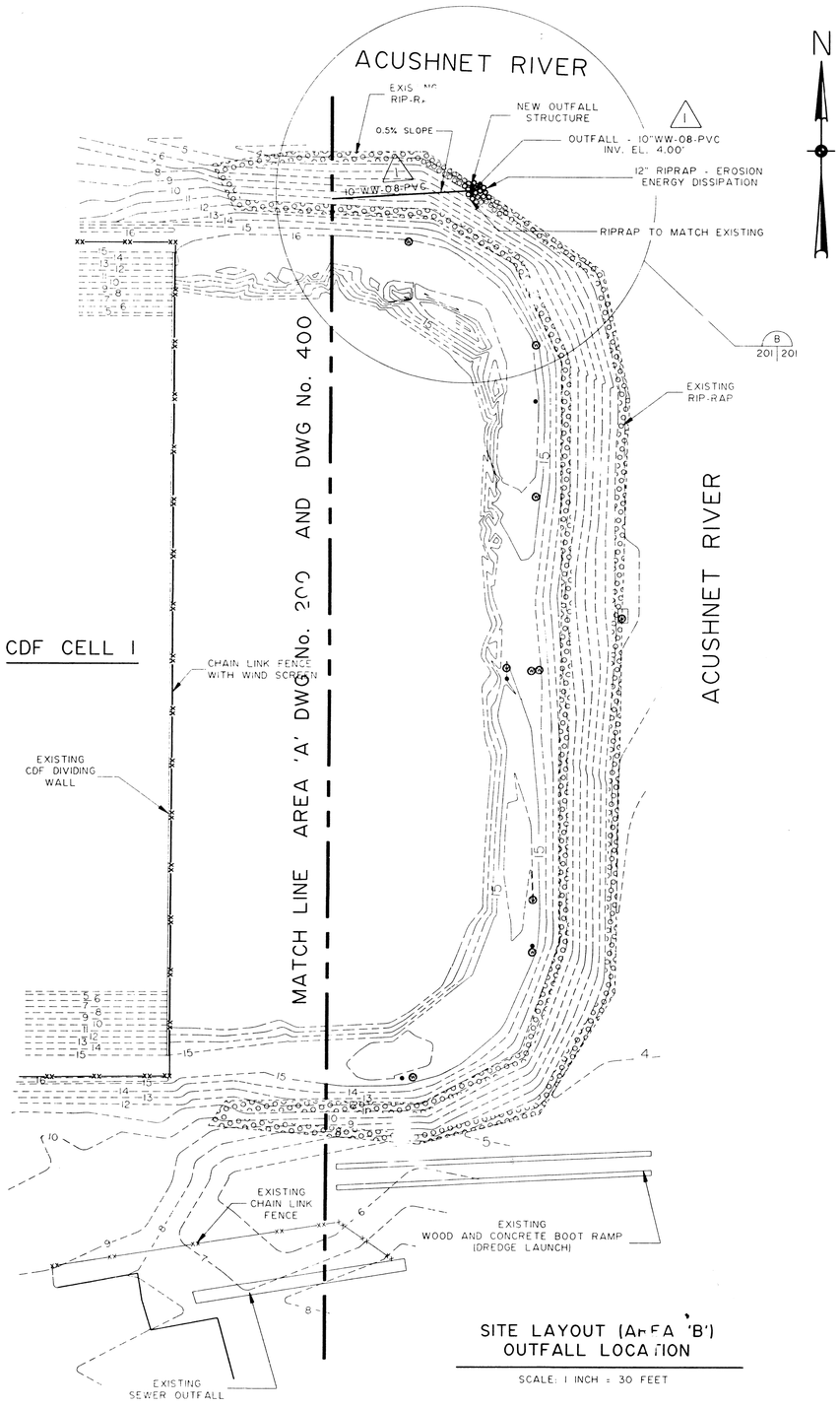

SITE LAYOUT (AREA 'B')
OUTFALL LOCATION

SCALE: 1 INCH = 30 FEET

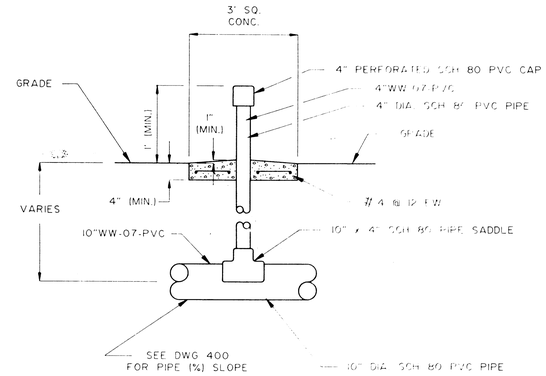

DETAIL A
GRAVITY LINE VENT
SCALE: NOT TO SCALE

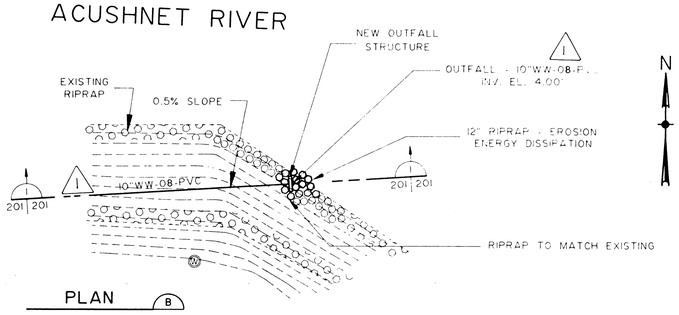

PLAN B
OUTFALL LOCATION
SCALE: 1 INCH = 20'

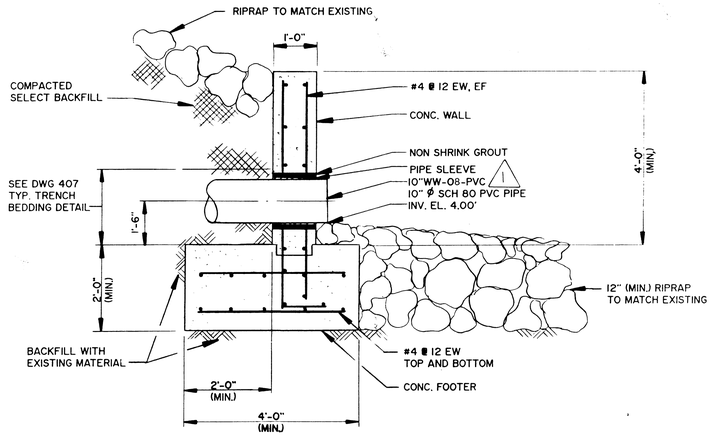

SECTION 1
OUTFALL STRUCTURE
NOT TO SCALE

30' 0 30'
1 INCH = 30 FEET

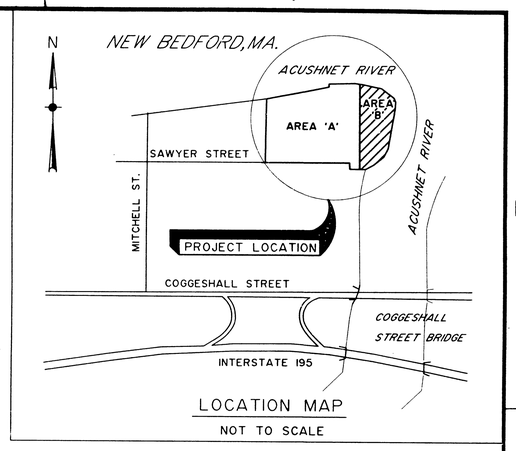

LOCATION MAP
NOT TO SCALE

$$ — THINK VALUE ENGINEERING — $$

Revisions

Symbol	Descriptions	Date	Approved
1	REVISED IN ACCORDANCE WITH AM NO. 0007	3-18-92	

The ERM Group, Inc.
ERM-New England, Inc.
205 Portland Street • Boston, Massachusetts

U.S. ARMY ENGINEER DISTRICT
CORPS OF ENGINEERS
OMAHA, NEBRASKA

Designed by: S.P.S.
Drawn by: J.A.H.
Checked by: S.P.S.
Reviewed by: SCJ
Submitted by: Chief, Section

NEW BEDFORD HARBOR MASSACHUSETTS
SUPERFUND HAZARDOUS WASTE CLEANUP
HOT SPOT OPERABLE UNIT

SITE LAYOUT

Scale: As Shown
Date: DEC. 1991
Spec. No.: DACW45-92-R-0020
Contract No.: DACW45-92-C-0101
Drawing Code: **CER47-400E-201**

Environmental Resources Management, Inc.
Exton, Pennsylvania 19341 • (215) 524-3500

LEGEND

NEW	EXISTING	DESCRIPTION
		Mean Low Water Line (MLW)
		Salt Marsh
		Contour Line
		Triangulation Survey Station
		Rip Rap
		Paved Roadway
		Gravel Roadway
		Telephone Pole
		Fence
		Building

HORIZONTAL CONTROL COORDINATES		
NAME	NORTH	EAST
COG	239616.53	759018.53
COFFIN	242176.48	758840.87
GOLF	247211.92	759711.47
LEDGE	242675.12	760282.95
VERANDA	241197.41	760307.94

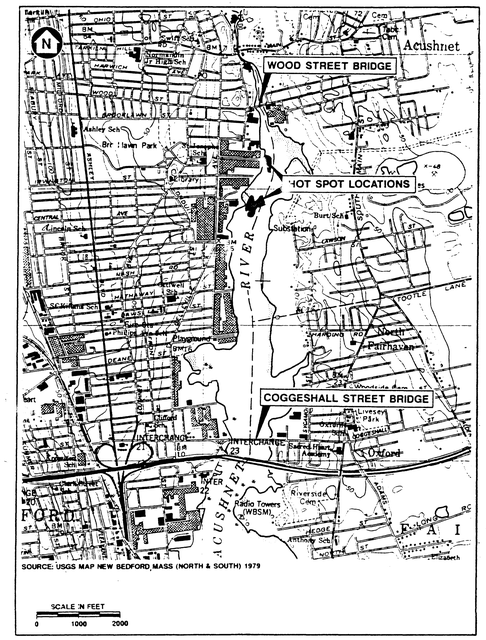

VICINITY MAP

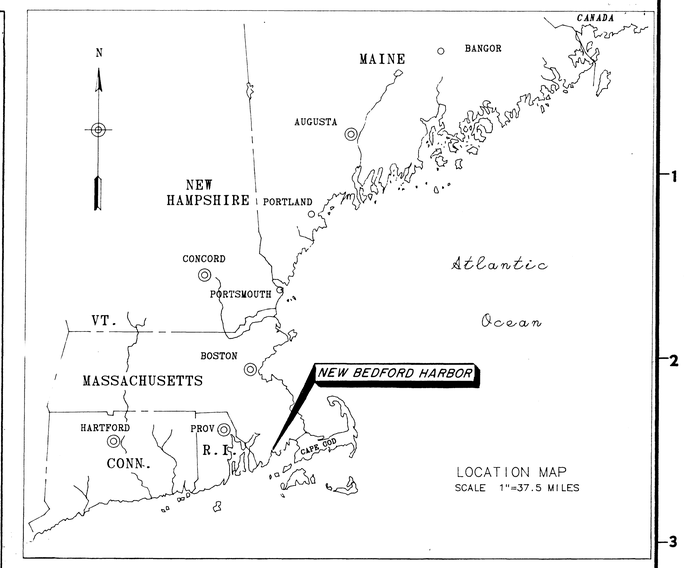

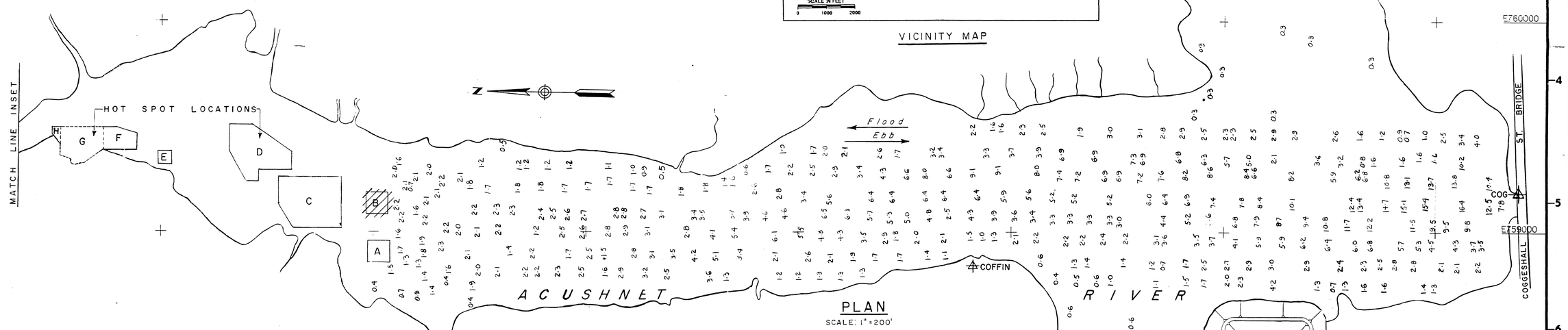

PLAN
SCALE: 1"=200'

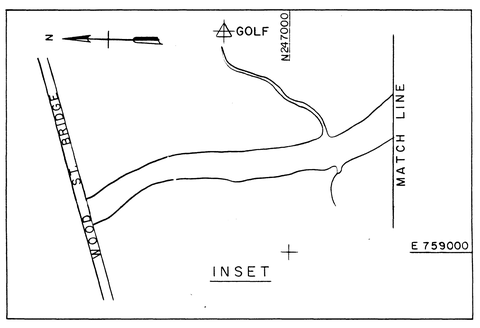

INSET

GENERAL NOTES - HYDROGRAPHIC SURVEYS:

Soundings are in feet and tenths and are referred to the plane of Mean Low Water (M.L.W.).

Topography from previous surveys

Bench Mark Data: TBM "Bridge" 1985 is a Corps of Engineers brass disk stamped "K" set flush on the top of the most northerly edge of a concrete sidewalk on the north side of the Coggeshall Street Bridge crossing the Acushnet River and on the outside of the guard rail fence, and 50.0 ft. east of Cog (1985)

Elevation is 20.36 feet above M.L.W.

Coordinates are based on the Lambert Grid System for the Commonwealth of Massachusetts, Mainland Zone & N.A.D. 1927.

"The sounding information depicted on these maps represents the SHOALEST soundings of those obtained from hydrographic surveys conducted during August 1985 (sht.1) & October 1990 (sht.2) This information should NOT be used to determine volumes."

"The information depicted on these maps represents the results of surveys made on the dates indicated, and can only be considered as indicating the general conditions existing at that time.

Fieldbooks: R & H 2309 & 2967

Depthsounder Roll: 85-63,64,65,66,67 (sht.1) & 90-163 (sht.2).

Survey by: J. Preston & Party

INDICATES DELETED PER USACE DIRECTION

GRAPHIC SCALES
1" = 200' 200' 0 200' 400'
1" = 37.5 MI. 25 0 25 50 75 MI.

REVISION	DATE	DESCRIPTION	BY

DEPARTMENT OF THE ARMY
NEW ENGLAND DIVISION
CORPS OF ENGINEERS
WALTHAM, MASS.

DES. BY | DR. BY | CK. BY
SUBMITTED: CHIEF, COAST. ENG./SUR BR.
APPROVAL RECOMMENDED: CHIEF, DESIGN DIVISION
PROJECT MANAGER
APPROVAL RECOMMENDED: CHIEF, PROJECT MNGT/DIVISION
APPROVED: DIRECTOR OF ENGINEERING — DATE DEC. 1991

NEW BEDFORD HARBOR — MASSACHUSETTS
SUPERFUND HAZARDOUS WASTE CLEANUP
HOT SPOT OPERABLE UNIT
GENERAL PLAN AND INDEX

SCALE: AS SHOWN — SPEC. NO. DACW45-92-R-0020
DRAWING NUMBER CER 47-400E-202
SHEET 1 OF 3
DACW45-92-C-0101

SEE NOAA CHART 13230

CORPS OF ENGINEERS

U. S. ARMY

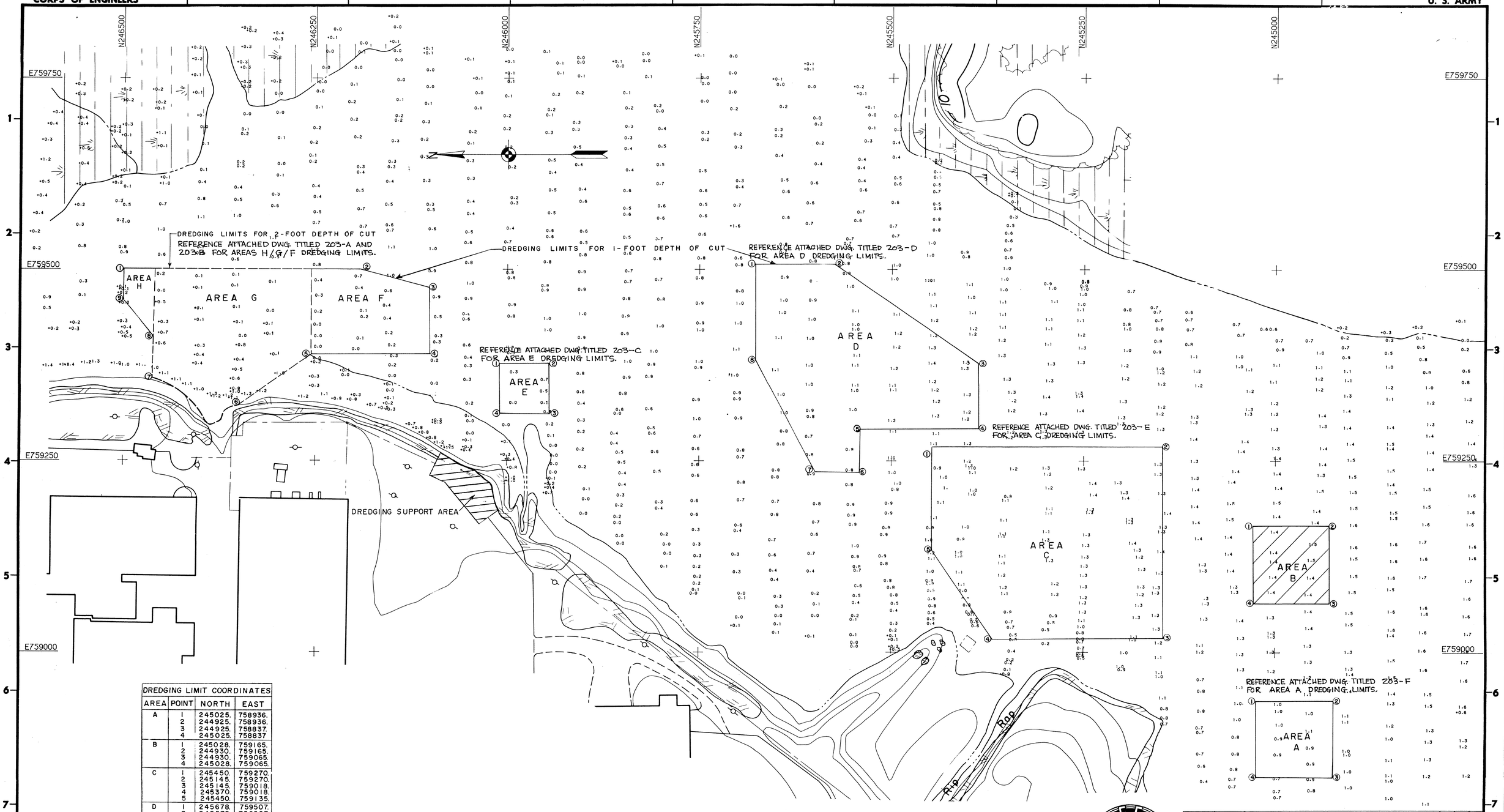

DREDGING LIMIT COORDINATES			
AREA	POINT	NORTH	EAST
A	1	245025.	758936.
	2	244925.	758936.
	3	244925.	758837.
	4	245025.	758837.
B	1	245028.	759165.
	2	244930.	759165.
	3	244930.	759065.
	4	245028.	759065.
C	1	245450.	759270.
	2	245145.	759270.
	3	245145.	759018.
	4	245370.	759018.
	5	245450.	759135.
D	1	245678.	759507.
	2	245575.	759507.
	3	245385.	759380.
	4	245385.	759293.
	5	245540.	759293.
	6	245540.	759235.
	7	245600.	759235.
	8	245678.	759380.
E	1	246010.	759377.
	2	245945.	759377.
	3	245945.	759310.
	4	246010.	759310.
F	1	246500.	759500.
	2	246193.	759500.
	3	246100.	759475.
	4	246100.	759390.
	5	246255.	759390.
	6	246350.	759320.
	7	246460.	759360.
	8	246460.	759410.
	9	246500.	759460.

NOTE:
For GENERAL NOTE, see sheet 1 on 3.

INDICATES DELETED PER USACE DIRECTION

GRAPHIC SCALE
1" = 50'
50' 0 50' 100'

SAFETY PAYS

REVISION	DATE	DESCRIPTION	BY

DEPARTMENT OF THE ARMY
NEW ENGLAND DIVISION
CORPS OF ENGINEERS
WALTHAM, MASS.

DES. BY / DR. BY / CK. BY
SUBMITTED: CHIEF, COAST. ENG /SUR BR.
APPROVAL RECOMMENDED: CHIEF, DESIGN DIVISION
REVIEWED: PROJECT MANAGER
APPROVAL RECOMMENDED: CHIEF, PROJECT MNGT. BRANCH

NEW BEDFORD HARBOR MASSACHUSETTS
SUPERFUND HAZARDOUS WASTE CLEANUP
HOT SPOT OPERABLE UNIT
DREDGING PLAN

APPROVED DIRECTOR OF ENGINEERING
DATE DEC. 1991

SCALE: 1" = 50'
SPEC. NO. DACW45-92-R-0020
DRAWING NUMBER CER 47-400E-203
SHEET 2 OF 3

DACW45-92-C-0101

SEE NOAA CHART 13230

NEW BEDFORD HARBOR - HOT SPOT

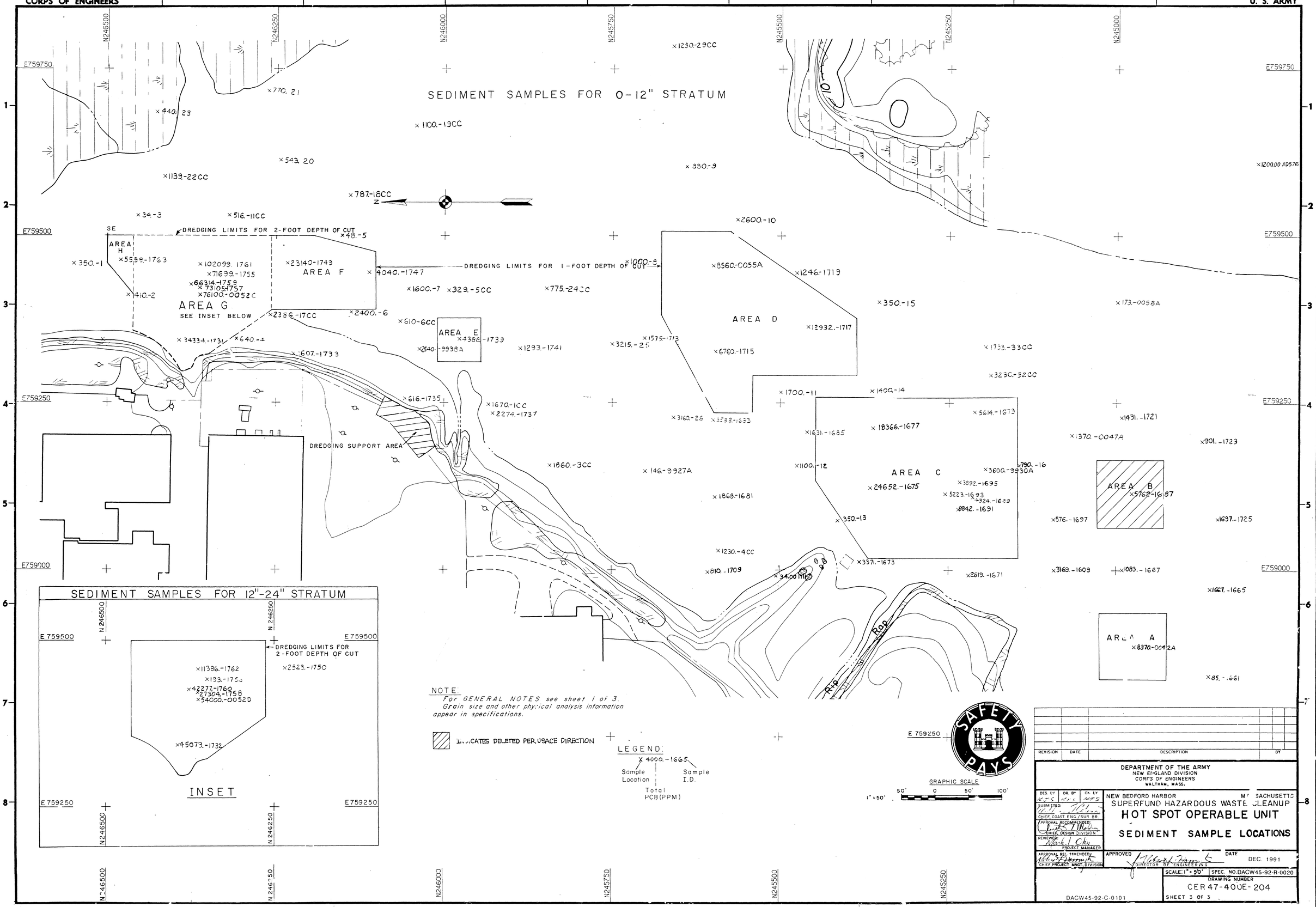
CORPS OF ENGINEERS
U. S. ARMY
SEDIMENT SAMPLES FOR 0-12" STRATUM
DREDGING LIMITS FOR 2-FOOT DEPTH OF CUT
DREDGING LIMITS FOR 1-FOOT DEPTH OF CUT
AREA H
AREA F
AREA G
SEE INSET BELOW
AREA E
AREA D
AREA C
AREA B
AREA A
DREDGING SUPPORT AREA
Rip Rap
SEDIMENT SAMPLES FOR 12"-24" STRATUM
DREDGING LIMITS FOR 2-FOOT DEPTH OF CUT
INSET
NOTE:
For GENERAL NOTES see sheet 1 of 3.
Grain size and other physical analysis information appear in specifications.
INDICATES DELETED PER USACE DIRECTION
LEGEND:
X 4000.-1665
Sample Location
Sample I.D.
Total PCB(PPM)
GRAPHIC SCALE
1" = 50'
SAFETY PAYS
REVISION
DATE
DESCRIPTION
BY
DEPARTMENT OF THE ARMY
NEW ENGLAND DIVISION
CORPS OF ENGINEERS
WALTHAM, MASS.
NEW BEDFORD HARBOR
MASSACHUSETTS
SUPERFUND HAZARDOUS WASTE CLEANUP
HOT SPOT OPERABLE UNIT
SEDIMENT SAMPLE LOCATIONS
DES. BY
DR. BY
CK. BY
SUBMITTED:
CHIEF, COAST. ENG./SUR. BR.
APPROVAL RECOMMENDED:
CHIEF, DESIGN DIVISION
REVIEWED:
PROJECT MANAGER
APPROVAL RECOMMENDED:
CHIEF, PROJECT MNGT. DIVISION
APPROVED
DIRECTOR OF ENGINEERING
DATE
DEC. 1991
SCALE: 1" = 50'
SPEC. NO. DACW45-92-R-0020
DRAWING NUMBER
CER 47-400E-204
SHEET 3 OF 3
DACW45-92-C-0101
NEW BEDFORD HARBOR - HOT SPOT SAMPLING
SEE NOAA CHART 13230

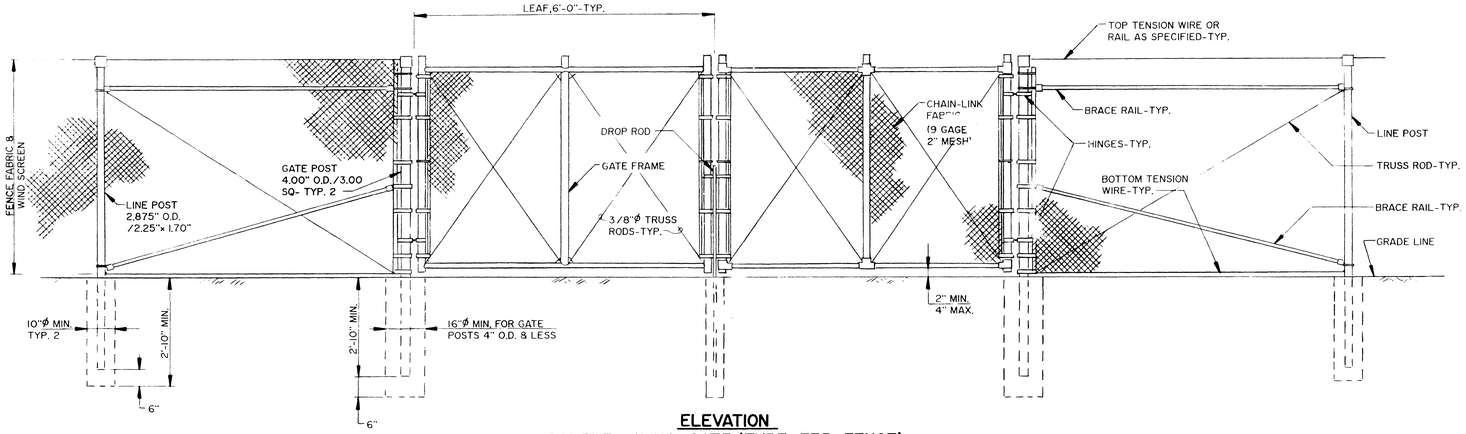

ELEVATION
DOUBLE SWING GATE (TYPE FE5 FENCE)

NO SCALE

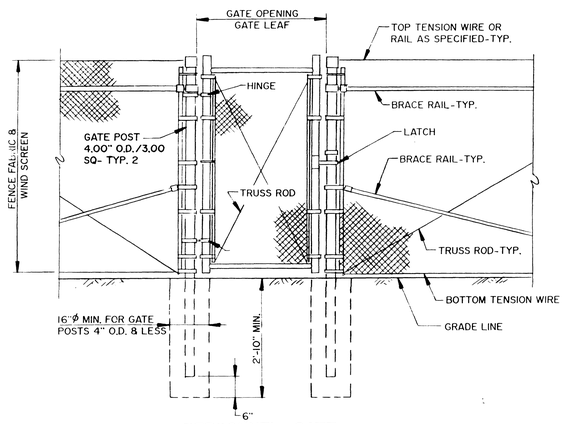

PERSONNEL GATE
TYPE FE5 FENCE

NO SCALE

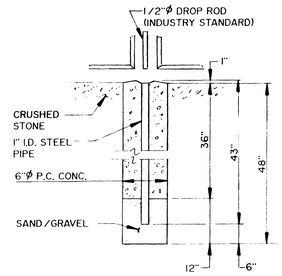

DROP ROD FOUNDATION

NO SCALE

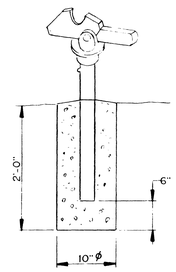

GATE KEEPER
(TO HOLD GATE OPEN)

NO SCALE

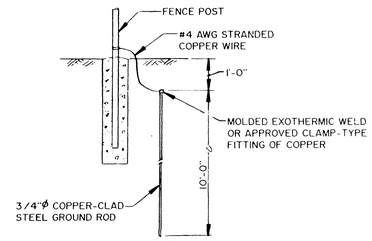

GROUNDING DETAIL

NO SCALE

NOTES:

1. DETAILS SHOWN ARE TO CLARIFY REQUIREMENTS & ARE NOT INTENDED TO LIMIT OTHER TYPE OF FENCE SECTIONS & METHODS OF INSTALLATION.
2. SWING GATES SHALL BE CONSTRUCTED WITH DROP RODS PADLOCKS, LATCH ASSEMBLY & GATE KEEPERS EXCEPT AS NOTED.
3. ALL GATE FRAMES SHALL BE A MIN. 1.90" NOM.(ROUND) OR 2.00" NOM.(SQUARE). GATE FRAMES SHALL BE OF WELDED CONSTRUCTION OR SHALL BE ASSEMBLED USING HEAVY FITTINGS, AT CONTRACTORS OPTION. A WELDED HORIZ. BRACE MAY BE USED IN LIEU OF TRUSS RODS TO BRACE ALL WELDED GATE FRAMES. THE CONTRACTOR SHALL BE RESPONSIBLE FOR THE PROPER RIGID CONSTUCTION OF ALL GATES SUPPLIED.
4. GATES SHALL BE DESIGNATED AS FOLLOWS:

FENCE TYPE	-	FE5,FE6,ETC.
FENCE HEIGHT	-	INCHES
TYPE OPENING	-	SO(SINGLE)
	-	DO(DOUBLE)
HINGE	-	RA(STANDARD)
	-	HO(OFFSET)
OPENING	-	FEET(CLEAR OPENING BETWEEN GATE POSTS)

EXAMPLES: FE5-120-DO-HO-138
FE5-120-SO-HO-36

STEEL POST SCHEDULE	
USE & SECTION	MIN. OUTSIDE DIM.(NOM.) FABRIC OVER 96"
CORNER,END & PULL POSTS:	
TUBULAR ROUND	4.00" O.D.
TUBULAR SQUARE	3.00" SQ.
LINE POSTS:	
TUBULAR ROUND	2.875" O.D.
H-SECTION	2.25"x 1.70"
TOP,BOTTOM & BRACE RAILS:	
TUBULAR ROUND	1.66" O.D.
TUBULAR SQUARE	1.50" SQ.
H-SECTION	1.625"x 1.50"
C-SECTION (ROLL FORMED)	1.625"x 1.25"

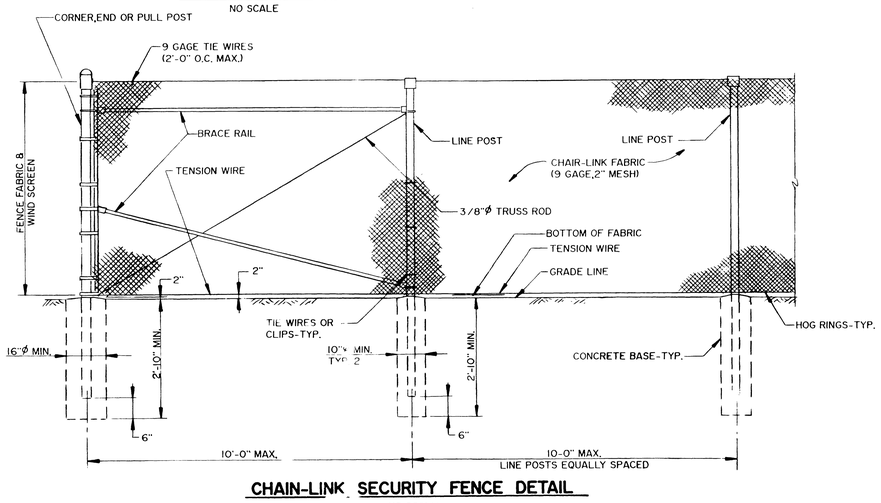

CHAIN-LINK SECURITY FENCE DETAIL

NO SCALE

Environmental Resources Management, inc.
Exton, Pennsylvania 19341 • (215) 524-3500

$$ — THINK VALUE ENGINEERING — $$

Revisions

Symbol	Descriptions	Date	Approved

ERM-New England, inc.
205 Portland Street • Boston, Massachusetts

U.S. ARMY ENGINEER DISTRICT
CORPS OF ENGINEERS
OMAHA, NEBRASKA

NEW BEDFORD HARBOR — MASSACHUSETTS
SUPERFUND HAZARDOUS WASTE CLEANUP
HOT SPOT OPERABLE UNIT

FENCE AND WIND SCREEN DETAILS

Designed by: S.P.S.
Drawn by: D. SWINEHART
Checked by: S.P.S.
Reviewed by: SCS
Submitted by: Chief: Section
Scale: As Shown
Date: DEC. 1991
Spec. No.: DACW45-92-R-0020
Contract No. DACW45-92-C-0101
Drawing Code: CER47-400E-205

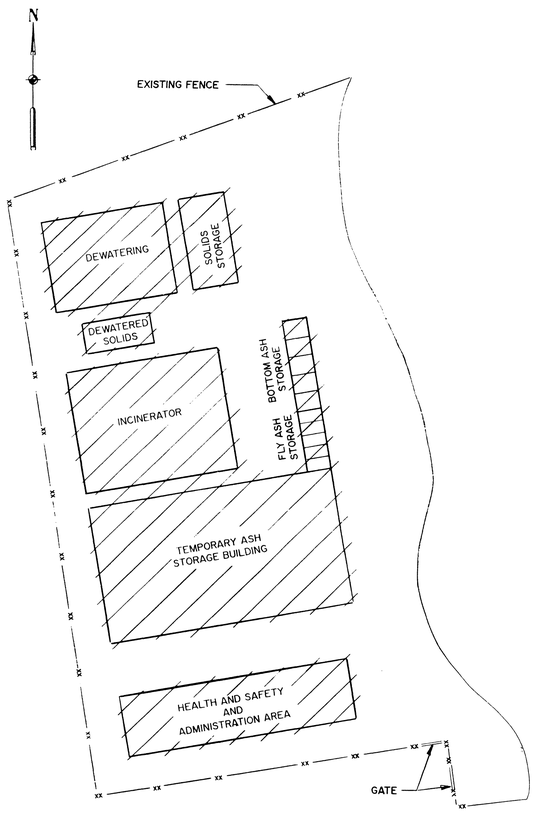

PLAN

SCALE: 1" = 40'- 0"

CROSS HATCHED INDICATES DEMOLITION

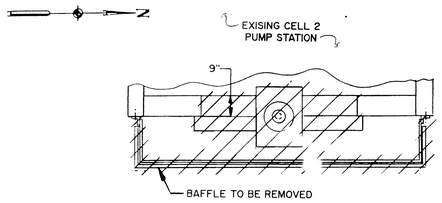

PLAN

SCALE: 1/2" = 1'- 0"

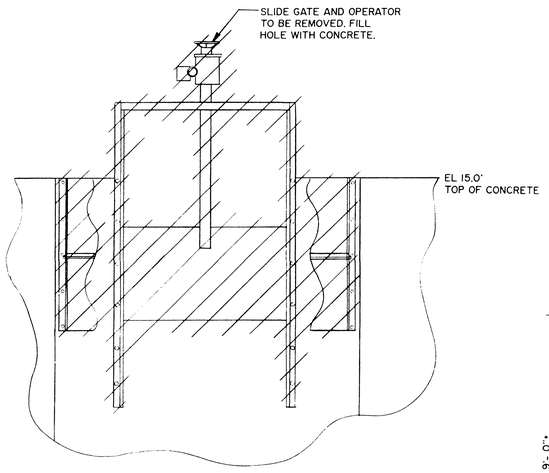

ELEVATION

SCALE: 1/2" = 1'- 0"

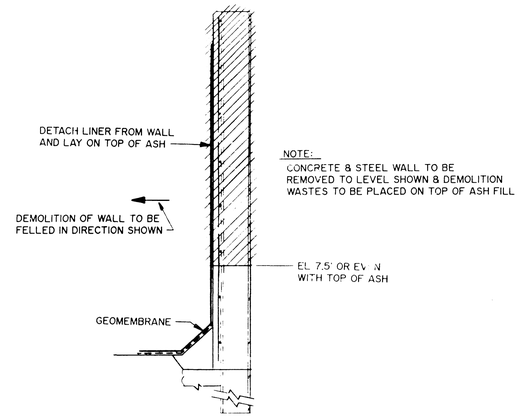

NOTE:
CONCRETE & STEEL WALL TO BE REMOVED TO LEVEL SHOWN & DEMOLITION WASTES TO BE PLACED ON TOP OF ASH FILL

DETAIL H

212 | 209

SCALE: 1/2" = 1'- 0"

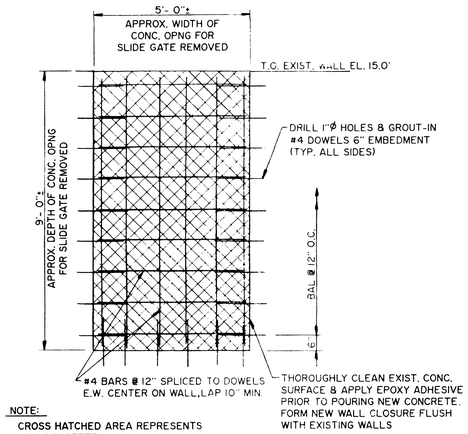

NOTE:
CROSS HATCHED AREA REPRESENTS NEW CONCRETE
APPROXIMATE THICKNESS OF NEW CONCRETE IS 9"

CONCRETE CLOSURE FOR WALL OPENING AT REMOVED 3'x 5' ALUMINUM SLIDE GATE

SCALE: 1/2" = 1'- 0"

GRAPHIC SCALES

1" = 40'- 0" : 40' 0 40'

1/2" = 1'- 0" : 12" 0 1' 2' 3'

NOTE:

ALL PLANS, ELEVATIONS AND DETAILS SHOWN ON THIS SHEET WERE ELIMINATED BY MOD NO. 39

$$ — THINK VALUE ENGINEERING — $$

Revisions			
Symbol	Descriptions	Date	Approved

ERM-New England, Inc.
205 Portland Street • Boston, Massachusetts

U.S. ARMY ENGINEER DISTRICT
CORPS OF ENGINEERS
OMAHA, NEBRASKA

Designed by: S.P.S.
Drawn by: P.L.S.
Checked by: S.P.S.
Reviewed by: SCS
Submitted by: Chief, Section

NEW BEDFORD HARBOR — MASSACHUSETTS
SUPERFUND HAZARDOUS WASTE CLEANUP
HOT SPOT OPERABLE UNIT

DEMOLITION PLANS, ELEVATION & DETAIL

Scale: As Shown
Date: DEC. 1991
Spec. No.: DACW45-92-R-0020
Contract No.: DACW45-92-C-0101
Drawing Code: **CER47-400E-209**

Environmental Resources Management, Inc.
Exton, Pennsylvania 19341 • (215) 524-3500

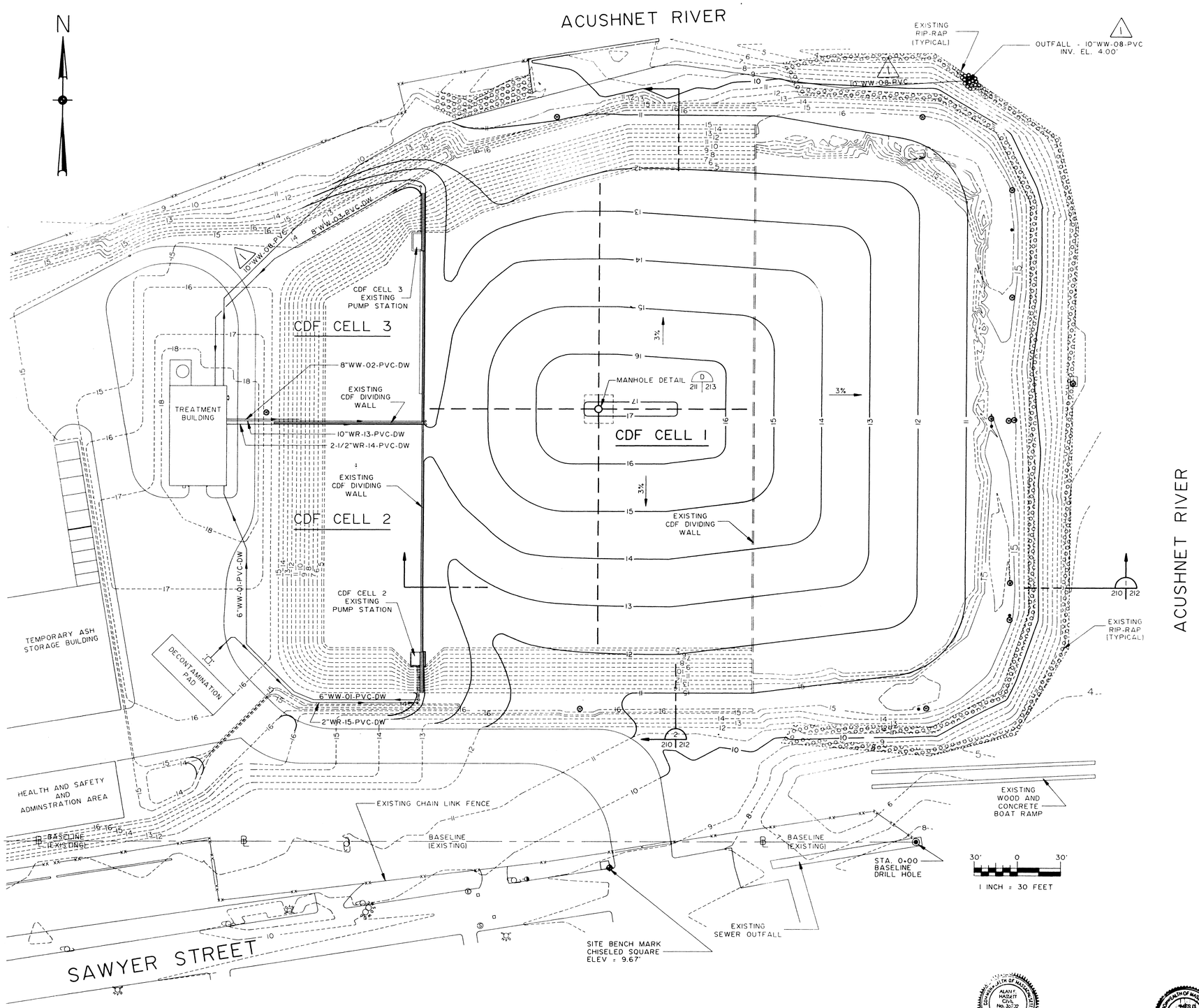

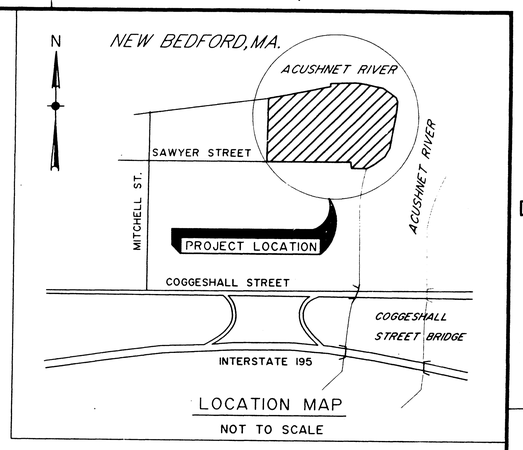

LOCATION MAP

NOT TO SCALE

NOTE:

CDF CAP ELIMINATED BY MOD. NO. 39

$$ — THINK VALUE ENGINEERING — $$

Revisions			
Symbol	Descriptions	Date	Approved
1	REVISED IN ACCORDANCE WITH AM NO. 0007	3-18-92	

The ERM Group — ERM-New England, inc. 205 Portland Street • Boston, Massachusetts

U.S. ARMY ENGINEER DISTRICT CORPS OF ENGINEERS OMAHA, NEBRASKA

NEW BEDFORD HARBOR MASSACHUSETTS

SUPERFUND HAZARDOUS WASTE CLEANUP

HOT SPOT OPERABLE UNIT

CDF CAP

FINAL GRADE PLAN

Designed by: JLT

Drawn by: P.L.S.

Checked by: JLT

Reviewed by: SCS

Submitted by: Alan F. Hassett

Chief: Section

Scale: As Shown

Date: DEC. 1991

Spec. No.: DACW45-92-R-0020

Contract No.: DACW45-92-C-0101

Drawing Code: CER47-400E-211

Environmental Resources Management, inc.

Exton, Pennsylvania 19341 • (215) 524-3500

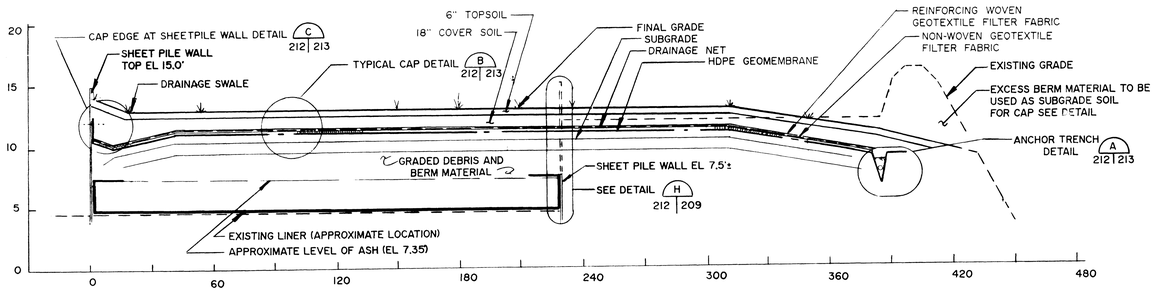

SECTION 1 / 211|212

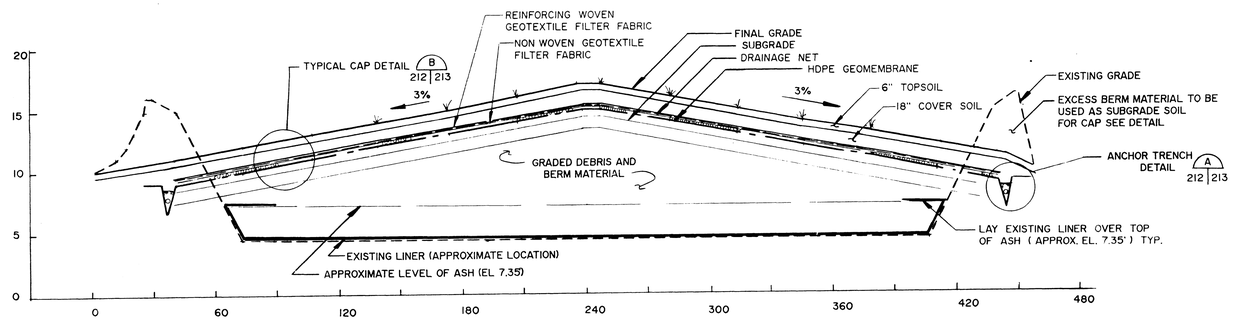

SECTION 2 / 211|212

NOTE:
CDF CAP ELIMINATED BY MOD. NO. 39

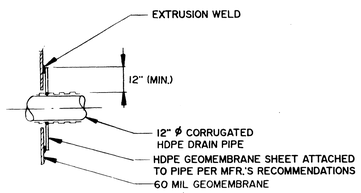

LINER PENETRATION DETAIL J 212|213
NOT TO SCALE

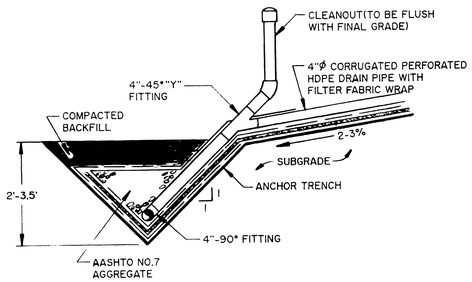

DRAIN PIPE TRANSITION DETAIL K 210|212
NOT TO SCALE

GRAPHIC SCALE
5' 0 5' VERTICAL
30' 0 30' HORIZONTAL

$$ — THINK VALUE ENGINEERING — $$

Revisions			
Symbol	Descriptions	Date	Approved

The ERM Group — ERM-New England, Inc.
205 Portland Street • Boston, Massachusetts

U.S. ARMY ENGINEER DISTRICT
CORPS OF ENGINEERS
OMAHA, NEBRASKA

NEW BEDFORD HARBOR MASSACHUSETTS
SUPERFUND HAZARDOUS WASTE CLEANUP
HOT SPOT OPERABLE UNIT
CDF CAP
SECTIONS

Designed by: JLT
Drawn by: P.L.S.
Checked by: JLT
Reviewed by: SCS
Submitted by: Chief Section
Scale: As Shown
Date: DEC. 1991
Spec. No.: DACW45-92-R-0020
Contract No.: DACW45-92-C-0101
Drawing Code: CER47-400E-212

Environmental Resources Management, Inc.
Exton, Pennsylvania 19341 • (215) 524-3500

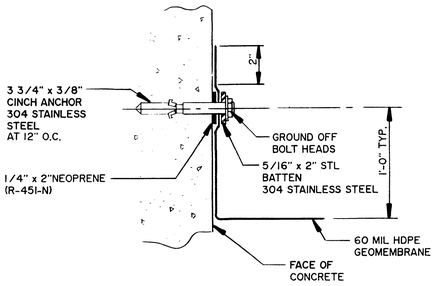

GEOMEMBRANE CONN. TO CONCRETE STRUCTURES TYPICAL DETAIL (F)

NOT TO SCALE

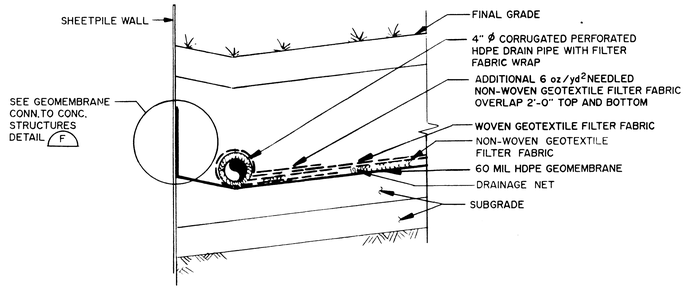

CAP EDGE AT SHEETPILE WALL DETAIL (C)

NOT TO SCALE 212 | 213

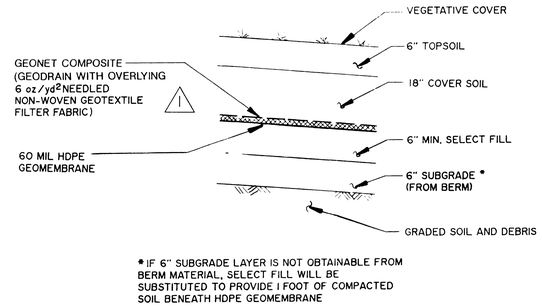

TYPICAL CAP DETAIL (B)

NOT TO SCALE 212 | 213

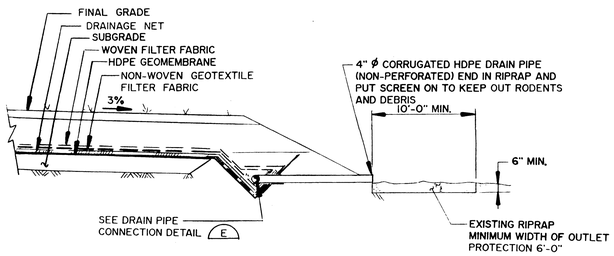

CAP DRAIN PIPE AND OUTLET DETAIL (H)

NOT TO SCALE 210 | 213

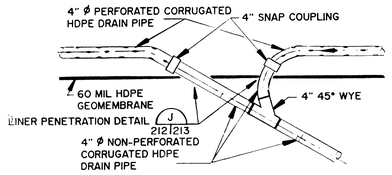

DRAIN PIPE CONNECTION DETAIL (G)

NOT TO SCALE 210 | 213

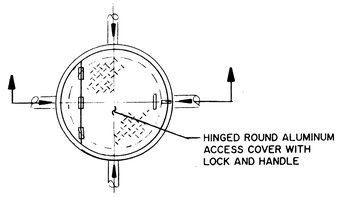

PLAN

NOTE:
CDF CAP ELIMINATED BY MOD. NO. 39

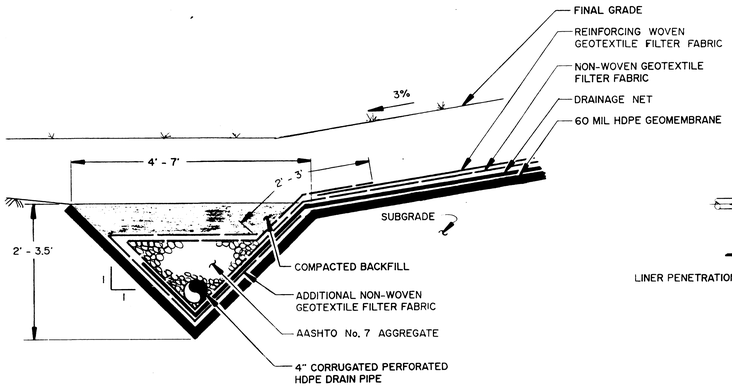

ANCHOR TRENCH DETAIL (A)

NOT TO SCALE 212 | 213

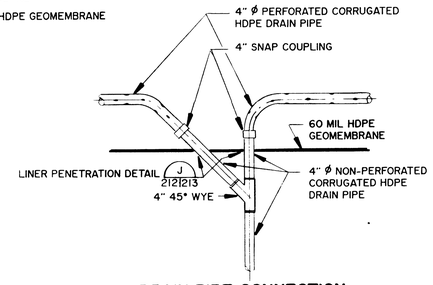

DRAIN PIPE CONNECTION DETAIL (E)

NOT TO SCALE. 210 | 213

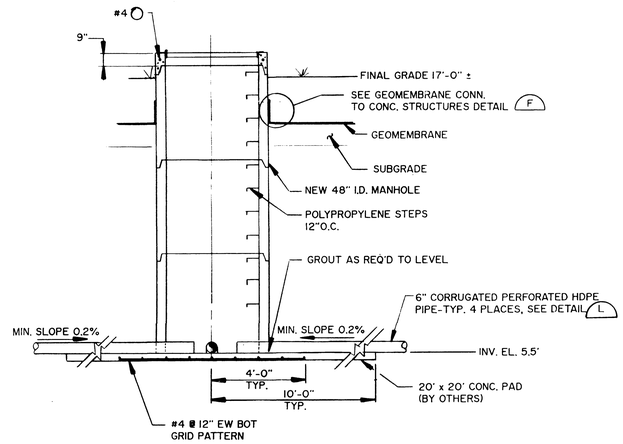

SECTION MANHOLE DETAIL (D)

3/8" = 1'-0"

211 | 213

GRAPHIC SCALE

12" 0 2' 4' 6'

3/8" = 1'-0"

NOTE:
ALL PIPE PENETRATIONS SHALL BE IN ACCORDANCE WITH THE MANUFACTURER'S RECOMMENDATIONS.

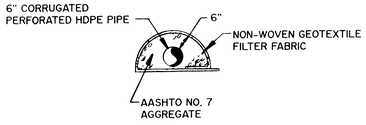

FILTER MEDIA DETAIL (L)

NOT TO SCALE

COMMONWEALTH OF MASSACHUSETTS
ALAN F. HASSETT
Civil
No. 30,707
REGISTERED PROFESSIONAL ENGINEER

COMMONWEALTH OF MASSACHUSETTS
JAMES D. FITZGERALD
SANITARY
No. 39584
REGISTERED PROFESSIONAL ENGINEER

Environmental Resources Management, Inc.
Exton, Pennsylvania 19341 • (215) 524-3500

$$ — THINK VALUE ENGINEERING — $$

Revisions

Symbol	Descriptions	Date	Approved
1	AM #0007 GENERAL REVISIONS	3-18-92	

ERM-New England, Inc.
205 Portland Street • Boston, Massachusetts

U.S. ARMY ENGINEER DISTRICT
CORPS OF ENGINEERS
OMAHA, NEBRASKA

Designed by: JLT	NEW BEDFORD HARBOR MASSACHUSETTS SUPERFUND HAZARDOUS WASTE CLEANUP HOT SPOT OPERABLE UNIT CDF CAP DETAILS
Drawn by: P.L.S.	
Checked by: JLT	
Reviewed by: SCS	Scale: As Shown — Date: DEC. 1991
Submitted by: Chief: Section	Spec. No.: DACW45-92-R-0020 Contract No.: DACW45-92-C-0101 Drawing Code: CER47-400E-213

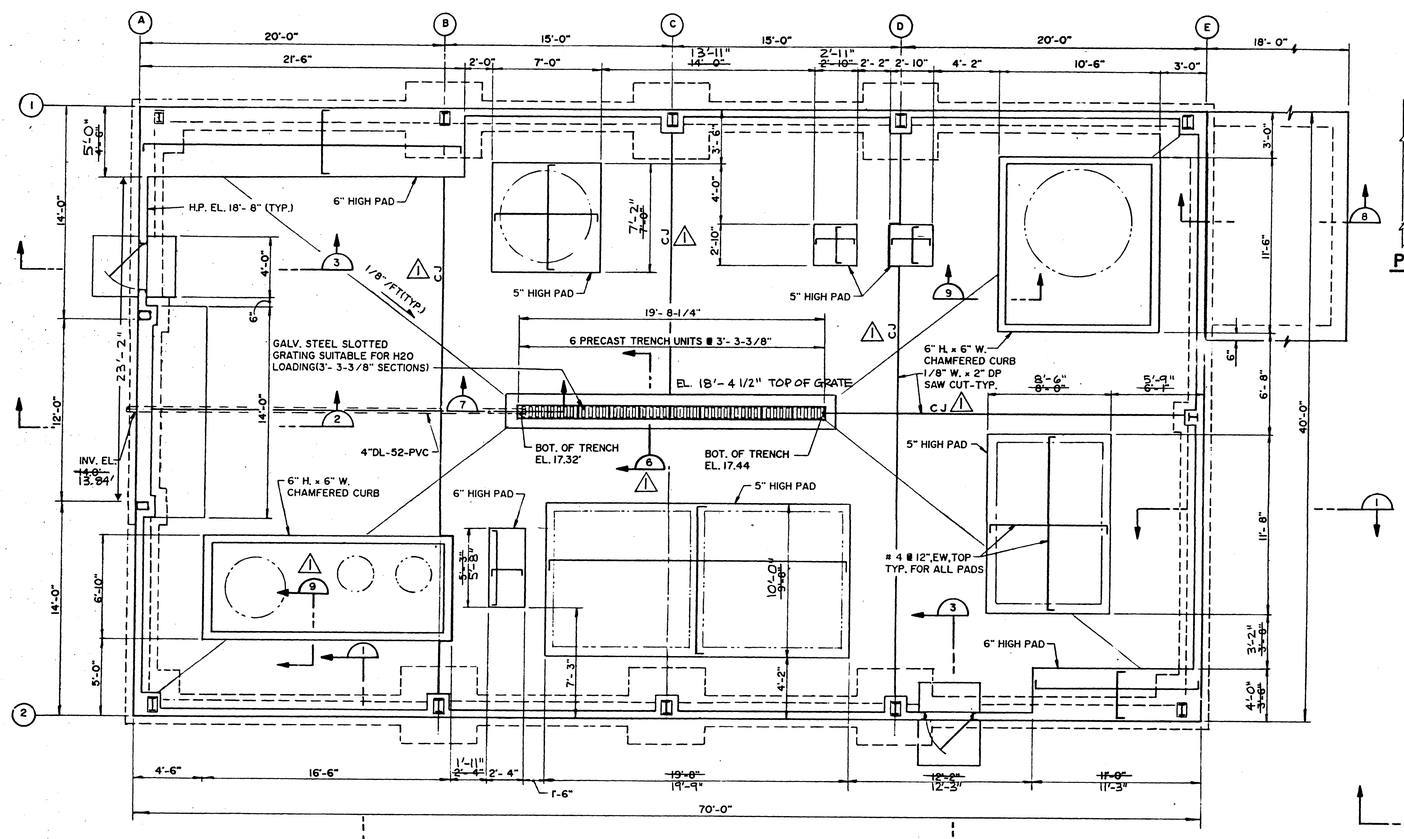

FLOOR PLAN

SCALE: 1/4" = 1'-0"

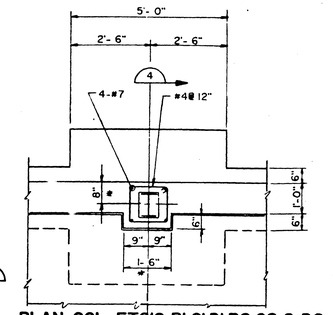

PLAN-COL. FTG'S B1,C1,D1,B2,C2 & D2

SCALE: 1/2" = 1'- 0"

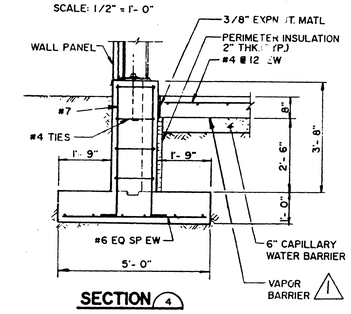

SECTION 4

SCALE: 1/2" = 1'- 0"

* INDICATES DIMENSION TO BE VERIFIED WITH PREENGINEERED BLDG MFR.

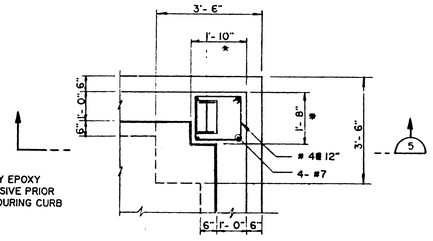

PLAN-COL. FTG'S A1,E1,A2 & E2

SCALE: 1/2" = 1'- 0"

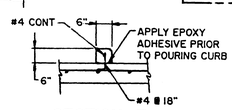

SECTION 9

SCALE 1/2" = 1'- 0"

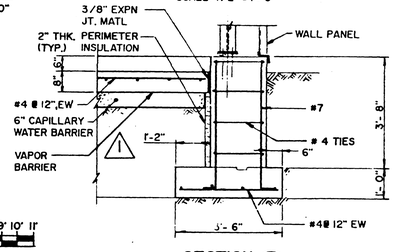

SECTION 5

SCALE: 1/2" = 1'- 0"

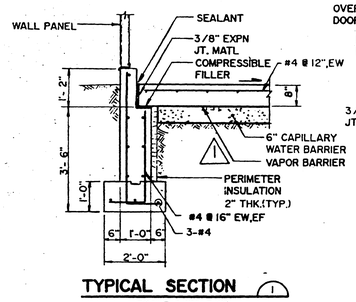

TYPICAL SECTION 1

SCALE 1/2" = 1'-0"

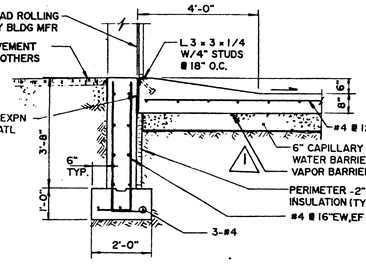

SECTION 2

SCALE 1/2" = 1'-0"

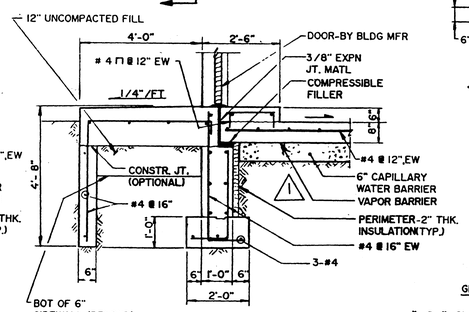

SECTION 3

SCALE 1/2" = 1'-0"

GRAPHIC SCALES

1/4" = 1'- 0"

1/2" = 1'- 0"

1-1/2" = 1'- 0"

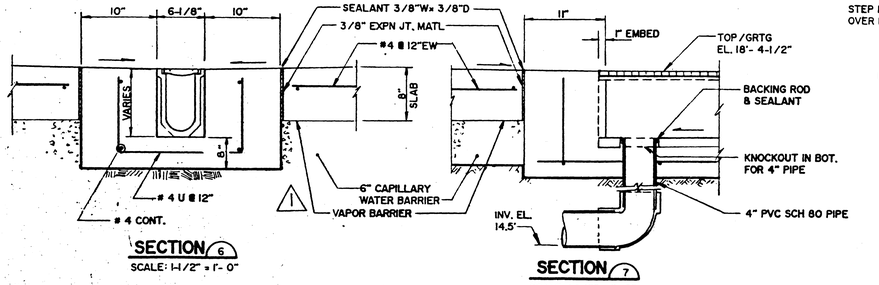

SECTION 6

SCALE: 1-1/2" = 1'- 0"

SECTION 7

SCALE: 1-1/2" = 1'- 0"

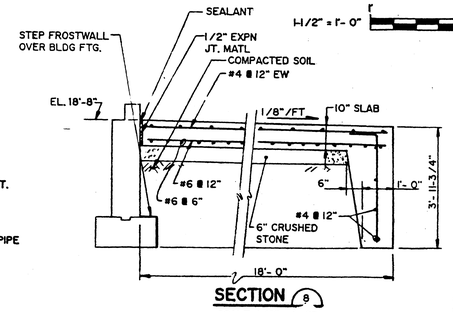

SECTION 8

SCALE 1/2" = 1'- 0"

NOTES

A. GENERAL

1) BUILDING DESIGN AND CONSTRUCTION SHALL CONFORM TO THE REQUIREMENTS OF THE BOCA NATIONAL BUILDING CODE 1990 EDITION AND APPLICABLE SECTIONS OF LOCAL BUILDING CODE.

2) THE FOLLOWING MINIMUM LIVE LOADS SHALL BE USED FOR DESIGN:

SNOW LOAD: 35 P.S.F.

WIND SPEED: 90 MPH, EXPOSURE "C"

SEISMIC: ZONE 2, IMPORTANCE FACTOR I

B. FOUNDATIONS

1) ALL FOUNDATIONS AND FLOOR SLAB SHALL BEAR ON UNDISTURBED SOIL OR PREPARED BASE HAVING A MINIMUM ALLOWABLE BEARING CAPACITY OF 2,000 P.S.F.

C. REINFORCING STEEL

1) REINFORCING STEEL BARS SHALL CONFORM TO ASTM GRADE 60.

D. STRUCTURAL STEEL

1) ALL MISCELLANEOUS STRUCTURAL STEEL SHALL CONFORM TO ASTM A36.

2) CONNECTIONS SHALL CONFORM TO AISC TYPE II UNLESS NOTED OTHERWISE.

3) BUILDING STEEL AND CONNECTIONS SHALL BE MANUFACTURER'S STANDARD.

E. CONCRETE SHALL HAVE A MINIMUM 28-DAY COMPRESSIVE STRENGTH OF 4,000 PSI

F. ALL REINFORCING STEEL IN SLAB SHALL HAVE A MINIMUM 1-1/2" COVER UNLESS NOTED OTHERWISE. FOR REINFORCEMENT IN THE CONCRETE CAST AGAINST, AND PERMANENTLY EXPOSED TO EARTH SHALL HAVE A MINIMUM COVER OF 3 INCHES.

G. ALL EXPOSED EDGES OF CONCRETE SHALL BE CHAMFERED 3/4" X 3/4" WITH MILLED CHAMFER STRIPS

$$ — THINK VALUE ENGINEERING — $$

Revisions

Symbol	Descriptions	Date	Approved
1	AM #0003 GENERAL REVISIONS	1-28-92	PE

The ERM Group — ERM-New England, Inc., 205 Portland Street • Boston, Massachusetts

U.S. ARMY ENGINEER DISTRICT CORPS OF ENGINEERS OMAHA, NEBRASKA

Designed by: W. H. H.

Drawn by: B. HOFFMAN

Checked by: W.H.H.

Reviewed by: SCS

Submitted by: Chief: Section

NEW BEDFORD HARBOR — MASSACHUSETTS

SUPERFUND HAZARDOUS WASTE CLEANUP

HOT SPOT OPERABLE UNIT

TREATMENT BUILDING

FLOOR PLAN & FDN DETAILS

Scale: As Shown — Date: DEC. 1991

Spec. No.: DACW45-92-R-0020

Contract No.: DACW45-92-C-0101

Drawing Code: **CER47-400E-300**

Environmental Resources Management, Inc. — Exton, Pennsylvania 19341 • (215) 524-3500

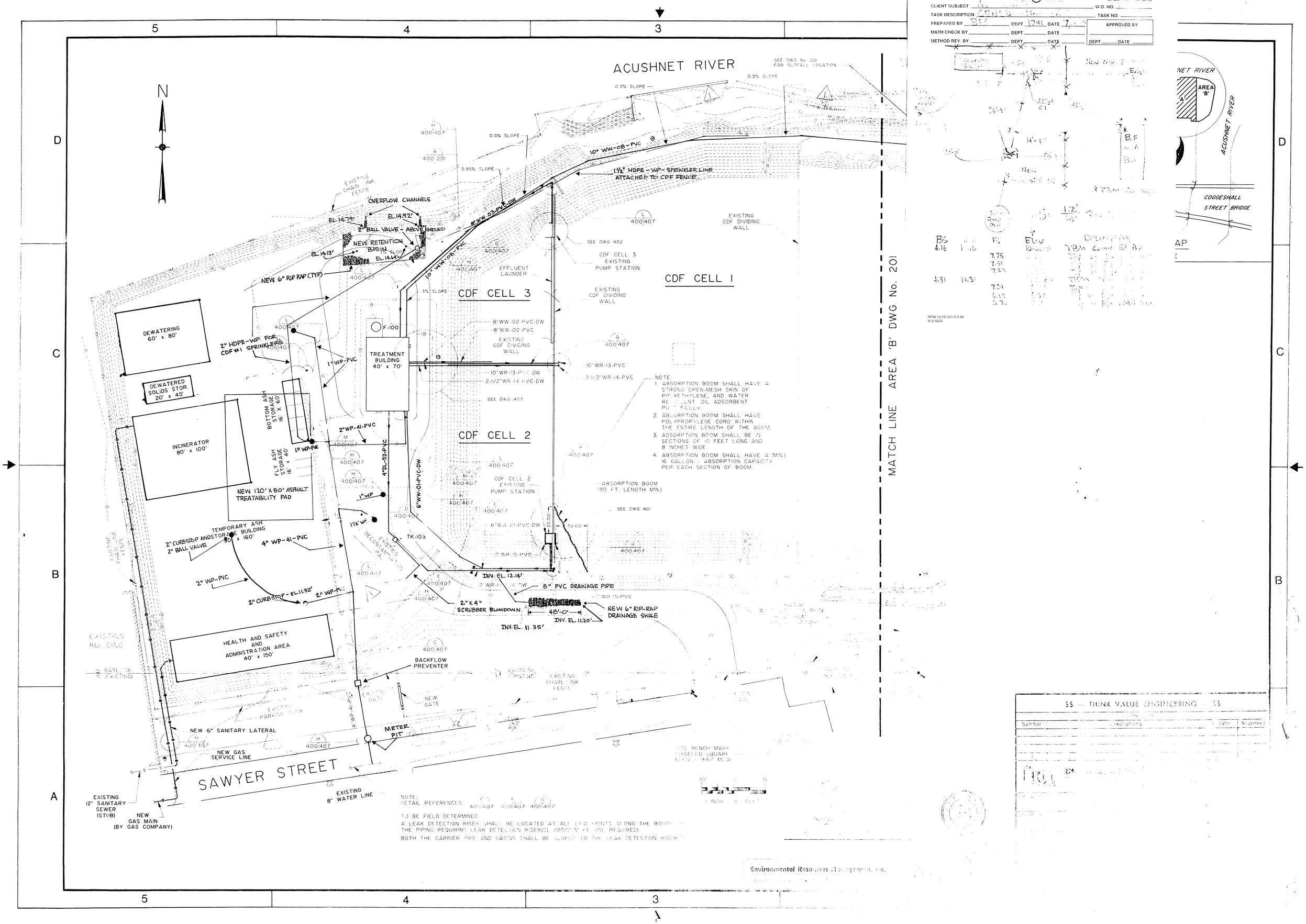

WESTON
CLIENT SUBJECT
TASK DESCRIPTION
PREPARED BY
MATH CHECK BY
METHOD REV. BY
W.O. NO.
TASK NO.
APPROVED BY
ACUSHNET RIVER
SEE DWG No. 201 FOR OUTFALL LOCATION
0.5% SLOPE
5.95% SLOPE
10" WW-08-PVC
1½" HDPE - WP - SPRINKLER LINE ATTACHED TO CDF FENCE
OVERFLOW CHANNELS
EL. 14.79'
EL. 14.92'
2" BALL VALVE - ABOVE GROUND
NEW RETENTION BASIN
EL. 14.13'
EL. 14.64'
NEW 6" RIP RAP (TYP)
EXISTING CHAIN LINK FENCE
8" WW-03-PVC-DW
10" WW-08-PVC
EFFLUENT LAUNDER
CDF CELL 3
CDF CELL 1
CDF CELL 2
EXISTING CDF DIVIDING WALL
SEE DWG 402
CDF CELL 3 EXISTING PUMP STATION
CDF CELL 2 EXISTING PUMP STATION
8"WW-02-PVC-DW
8"WW-02-PVC
10"WR-13-PVC-DW
2-1/2"WR-14-PVC-DW
10"WR-13-PVC
2-1/2"WR-14-PVC
SEE DWG 403
SEE DWG 401
DEWATERING 60' x 80'
DEWATERED SOLIDS STOR. 20' x 45'
INCINERATOR 80' x 100'
2" HDPE-WP FOR CDF #1 SPRINKLERS
1" WP-PVC
TREATMENT BUILDING 40' x 70'
F-100
BOTTOM ASH STORAGE 16' x 60'
FLY ASH STORAGE 16' x 40'
2"WP-41-PVC
1" WP-PVC
4"DL-52-PVC
6"WW-01-PVC-DW
1" WP
1½" WP
NEW 120' x 80' ASPHALT TREATABILITY PAD
TEMPORARY ASH STORAGE BUILDING 30' x 160'
2" CURBSTOP AND 2" BALL VALVE
4" WP-41-PVC
2" WP-PVC
2" CURBSTOP - EL. 11.32'
2" WP-PVC
TK-103
EXISTING DECONTAMINATION PAD
INV. EL. 12.14'
8" PVC DRAINAGE PIPE
2" x 4" SCRUBBER BLOWDOWN
48'-0"
INV. EL. 11.20'
INV. EL. 11.35'
NEW 6" RIP-RAP DRAINAGE SWALE
ABSORPTION BOOM (80 FT. LENGTH MIN.)
HEALTH AND SAFETY AND ADMINSTRATION AREA 40' x 150'
EXISTING BUILDING
BASELINE (EXISTING)
BACKFLOW PREVENTER
EXISTING GATE
NEW GATE
EXISTING CHAIN LINK FENCE
EXISTING PARKING CURB
NEW 6" SANITARY LATERAL
NEW GAS SERVICE LINE
METER PIT
4"WP-41-PVC
SAWYER STREET
EXISTING 8" WATER LINE
EXISTING 12" SANITARY SEWER (STUB)
NEW GAS MAIN (BY GAS COMPANY)
SITE BENCH MARK CHISELED SQUARE ELEV. = 9.67 MLW
MATCH LINE AREA 'B' DWG No. 201
NOTE:
1. ABSORPTION BOOM SHALL HAVE A STRONG OPEN-MESH SKIN OF POLYETHYLENE, AND WATER REPELLENT OIL ADSORBENT PULP FILLER.
2. ABSORPTION BOOM SHALL HAVE POLYPROPYLENE CORD WITHIN THE ENTIRE LENGTH OF THE BOOM.
3. ADSORPTION BOOM SHALL BE IN SECTIONS OF 10 FEET LONG AND 8 INCHES WIDE.
4. ABSORPTION BOOM SHALL HAVE A (MIN.) 16 GALLON - ABSORPTION CAPACITY PER EACH SECTION OF BOOM.
NOTE:
DETAIL REFERENCES: 400/407 400/407 400/407
TO BE FIELD DETERMINED.
A LEAK DETECTION RISER SHALL BE LOCATED AT ALL LOW POINTS ALONG THE ROUTE OF THE PIPING REQUIRING LEAK DETECTION RISER(S). (MINIMUM OF ONE REQUIRED).
BOTH THE CARRIER PIPE AND CASING SHALL BE SLOPED TO THE LEAK DETECTION RISER(S).
AREA 'B'
ACUSHNET RIVER
COGGESHALL STREET BRIDGE
BS
FS
ELEV
TBM
RFW 10-05-003 A-5-85
512-5643
$$ — THINK VALUE ENGINEERING — $$
Symbol
Descriptions
Date
Approved
Environmental Resources Management, Inc.

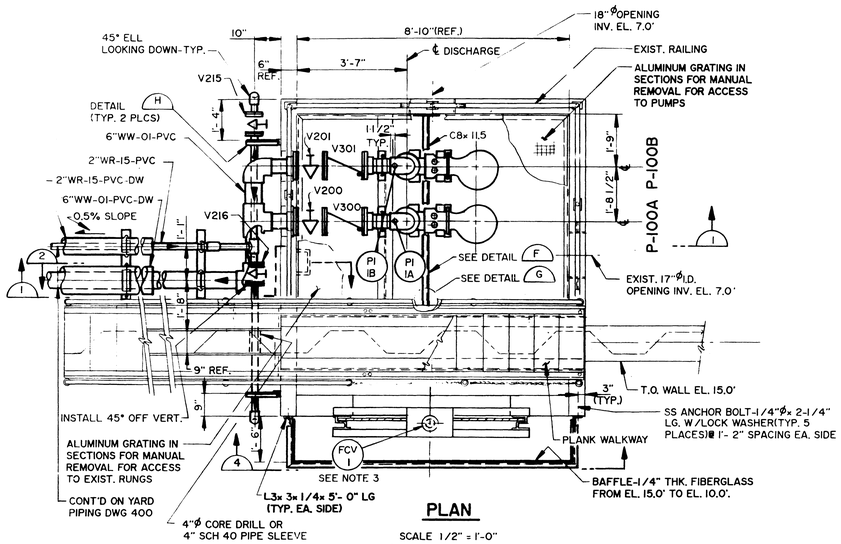

PLAN

SCALE 1/2" = 1'-0"

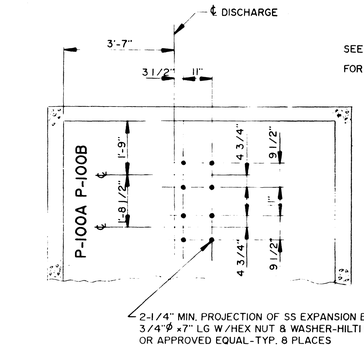

PLAN-ANCHOR BOLTS

SCALE: 1/2" = 1'- 0"

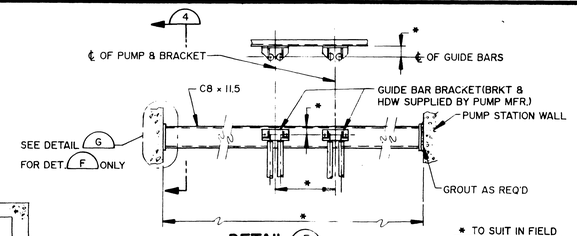

DETAIL E (AS SHOWN)

DETAIL F

NO SCALE

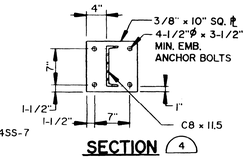

SECTION 4

SCALE: 1"= 1'- 0"

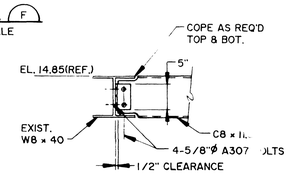

DETAIL G

SCALE: 1"= 1'- 0"

NOTES:

1. THE ABOVE GROUND PIPE OUTSIDE THE EXISTING SUMP WILL BE INSULATED & HEAT TRACED.
2. PUMP STATION STRUCTURE,WALKWAY,HAND RAILING, GRATING & CDF CELL WALLS ARE EXISTING.
3. MOTOR FOR THE SLIDE GATE HAS BEEN PURCHASED BUT SHALL BE INSTALLED IN THIS CONTRACT. ALL THE ELECTRICAL AND OTHER CONNECTIONS NECESSARY FOR THE INSTALLATION OF THE MOTOR INCLUDING TESTING AND START-UP SHALL BE PERFORMED IN THIS CONTRACT.

TABLE FOR DETAILS A & B				
DETAIL	PIPE SIZE	"L"	"M"	"N"
A	2",6",10"	1'- 8"	3"x 8" x2'- 8"	—
B	8" OR 12"	2'- 1"	3"x8" x2'-0"	1'- 0"

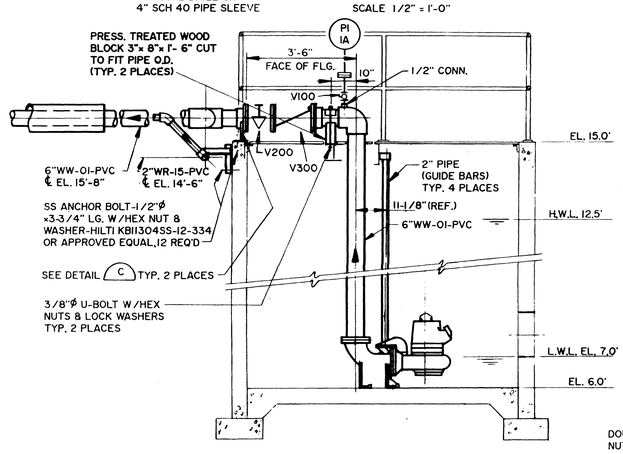

SECTION 1

SCALE: 1/2" = 1'-0"

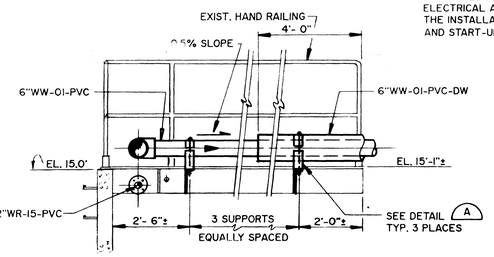

SECTION 2

SCALE: 1/2" = 1'-0"

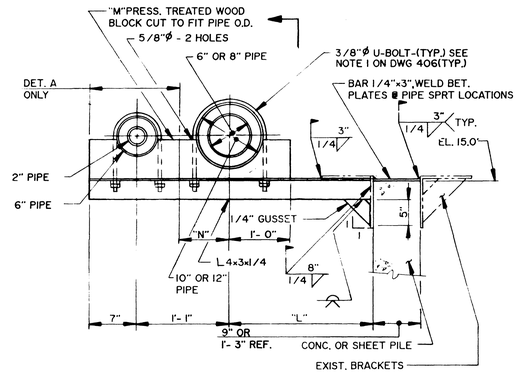

DETAIL A (6" OR 10" PIPE)

DETAIL B (8" OR 12" PIPE)

NO SCALE

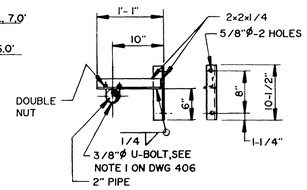

DETAIL H

SCALE: 1" = 1'- 0"

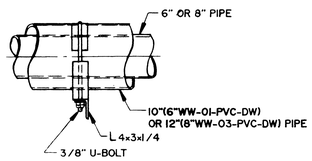

SECTION 3

SCALE: 1" = 1'-0"

GRAPHIC SCALES

1/2" = 1'- 0" 1' 0 1' 2' 3' 4' 5'

1" = 1'- 0" 1' 0 1' 2'

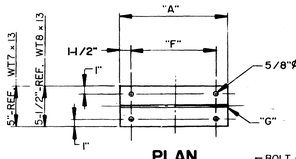

PLAN

TABLE FOR DETAILS C & D								
DETAIL	150# FLANGE	"A"	"B"	"H"	"J"	"E"	"F"	"G"
C	6"	1'-0"	8"	7	9-1/2"	4"	9"	WT7x 13
D	8"	1'-2"	9"	7-7/8"	11-3/4"	5"	11"	WT8x 13

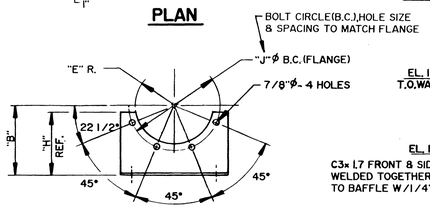

ELEVATION

DETAIL C (6" FLG.)

DETAIL D (8" FLG.)

SCALE: NONE

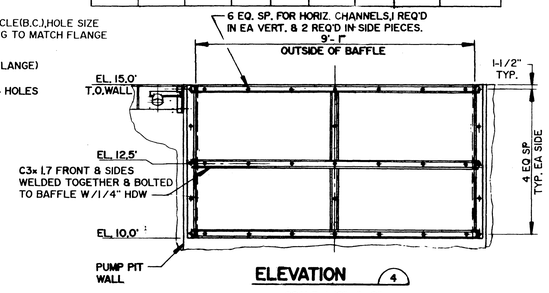

ELEVATION 4

SCALE: 1/2"= 1'- 0"

$$ — THINK VALUE ENGINEERING — $$

Revisions			
Symbol	Descriptions	Date	Approved

ERM-New England, Inc. 205 Portland Street • Boston, Massachusetts

U.S. ARMY ENGINEER DISTRICT CORPS OF ENGINEERS OMAHA, NEBRASKA

NEW BEDFORD HARBOR MASSACHUSETTS

SUPERFUND HAZARDOUS WASTE CLEANUP

HOT SPOT OPERABLE UNIT

CDF CELL 2 PUMP STATION PLANS,SECTIONS & DETAILS

Designed by: SPS	
Drawn by: D. SWINEHART	
Checked by: SPS	
Reviewed by: SCS	Scale: As Shown / Date: DEC. 1991
Submitted by: Chief: Section	Spec. No.: DACW45-92-R-0020 / Contract No.: DACW45-92-C-0101
	Drawing Code: CER47-400E-401

Environmental Resources Management, inc.
Exton, Pennsylvania 19341 • (215) 524-3500

WESTON

SHEET 1 of 3

CLIENT/SUBJECT CENAE - New Bedford W.O. NO. 03956-118-302

TASK DESCRIPTION Sluice Gate Installation Details TASK NO.

PREPARED BY BFF DEPT 1241 DATE 2/4/99

MATH CHECK BY DEPT DATE

METHOD REV. BY DEPT DATE

APPROVED BY DEPT DATE

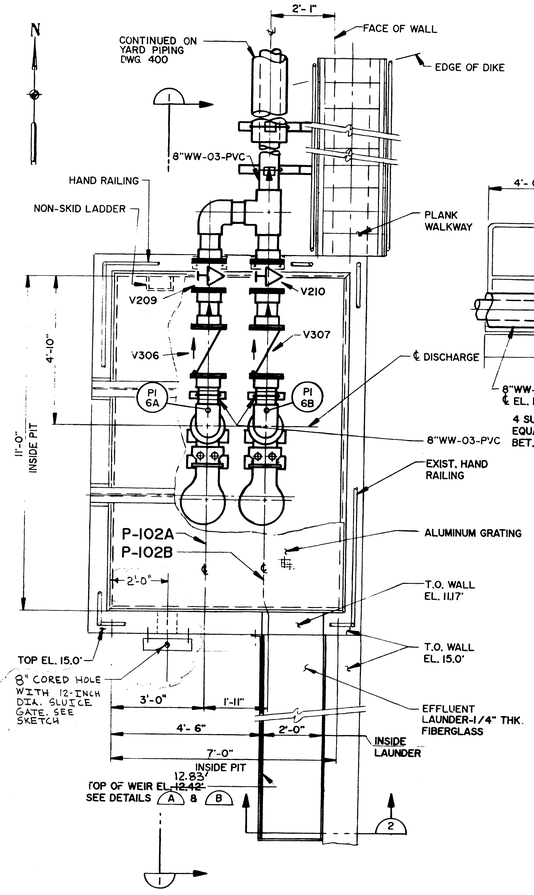

PLAN

SCALE 1/2" = 1'-0"

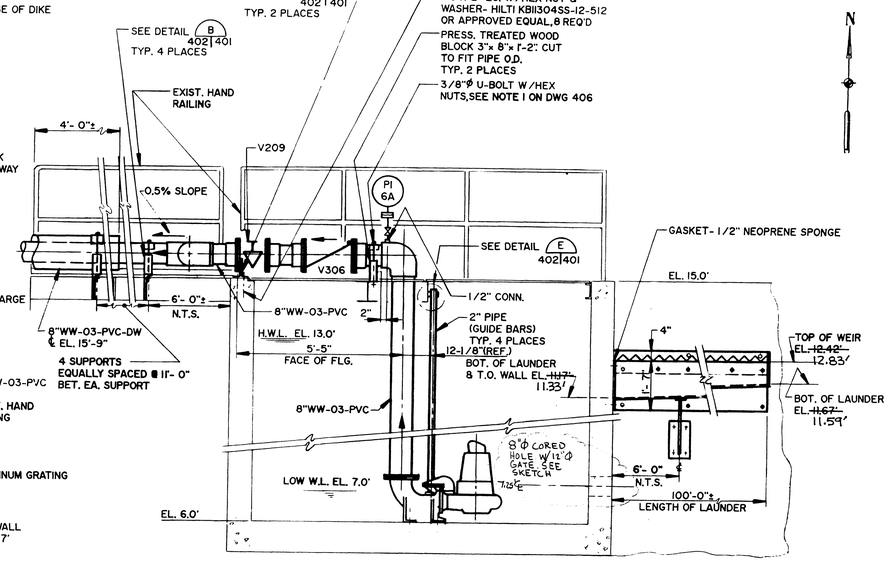

SECTION 1

SCALE: 1/2" = 1'-0"

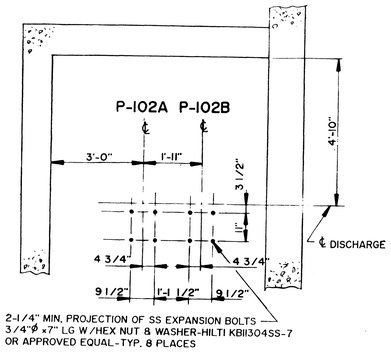

PLAN-ANCHOR BOLTS

SCALE: 1/2" = 1'-0"

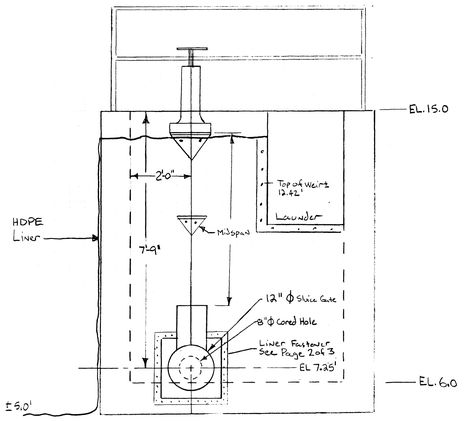

Not To Scale

As-Built BFF 4-20-99

A-5.85

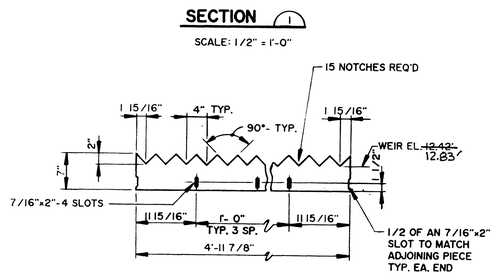

DETAIL A

SCALE: 1"= 1'-0"
(18 REQ'D)

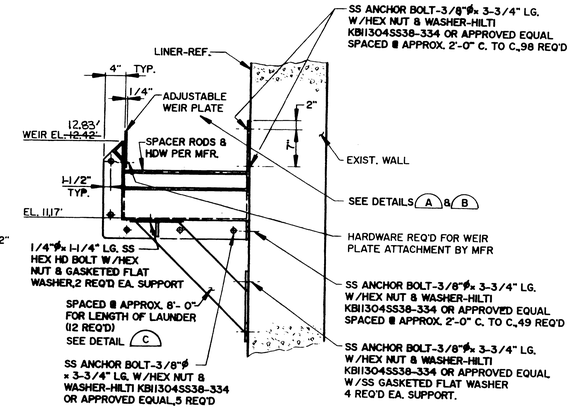

SECTION 2

SCALE: 1"= 1'-0"

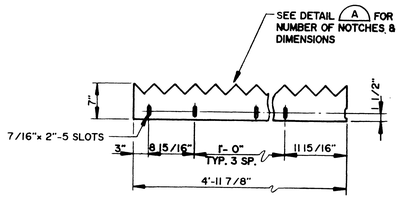

DETAIL B

SCALE: 1"= 1'-0"
(ONE FOR EACH END OF LAUNDER)

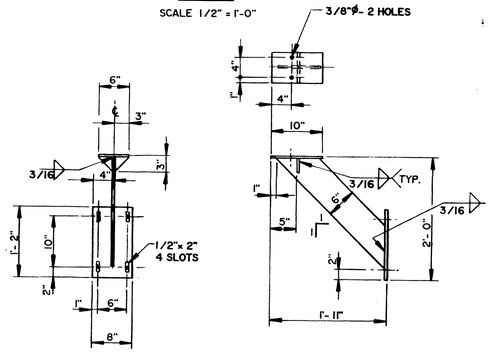

FRONT VIEW

SIDE VIEW

BRACKET MATERIAL - 1/4" THK. ALUMINUM PLATE

DETAIL C

SCALE 1"= 1'- 0"

GRAPHIC SCALES

1/2"= 1'- 0" 1' 0 1' 2' 3' 4' 5'

1"= 1'- 0" 1' 0 1' 2'

NOTES:

1. SEE DWG. 401 FOR NOTES.
2. PUMP STATION STRUCTURE, WALKWAY, HAND RAILING, GRATING & CDF CELL WALLS ARE EXISTING.

COMMONWEALTH OF MASSACHUSETTS ALAN T. HASSETT CIVIL No. 35702 REGISTERED PROFESSIONAL ENGINEER

Alan T. Hassett

COMMONWEALTH OF MASSACHUSETTS JAMES B. FITZGERALD JR. ELECTRICAL No. 35694 REGISTERED PROFESSIONAL ENGINEER

SAFETY BAYS

Environmental Resources Management, Inc.
Exton, Pennsylvania 19341 • (215) 524-3500

The ERM Group

$$ — THINK VALUE ENGINEERING — $$

Revisions

Symbol	Descriptions	Date	Approved

The ERM ERM-New England, Inc.
205 Portland Street • Boston, Massachusetts

U.S. ARMY ENGINEER DISTRICT
CORPS OF ENGINEERS
OMAHA, NEBRASKA

Designed by: S.P.S.
Drawn by: D. SWINEHART
Checked by: S.P.S.
Reviewed by: SCS
Submitted by: Alan T. Hassett Chief, Section

NEW BEDFORD HARBOR MASSACHUSETTS
SUPERFUND HAZARDOUS WASTE CLEANUP
HOT SPOT OPERABLE UNIT

CDF CELL 3 PUMP STATION
PLANS SECTIONS & DETAILS

Scale: As Shown
Date: DEC. 1991
Spec. No.: DACW45-92-R-0020
Contract No.: DACW45-92-C-0101
Drawing Code: CER47-400E-402

WESTON

CLIENT/SUBJECT: CENAE - New Bedford Harbor Superfund Site
TASK DESCRIPTION: Treatment Facility Improvements & Modifications D.O. 17
PREPARED BY: Bryce Fletcher DEPT 1241 DATE 4/20/91
MATH CHECKED BY: DEPT DATE
METHOD REV. BY: DEPT DATE

SHEET 1 of
W.O. NO. 03
TASK NO. 02
APPROVED BY
DEPT DATE

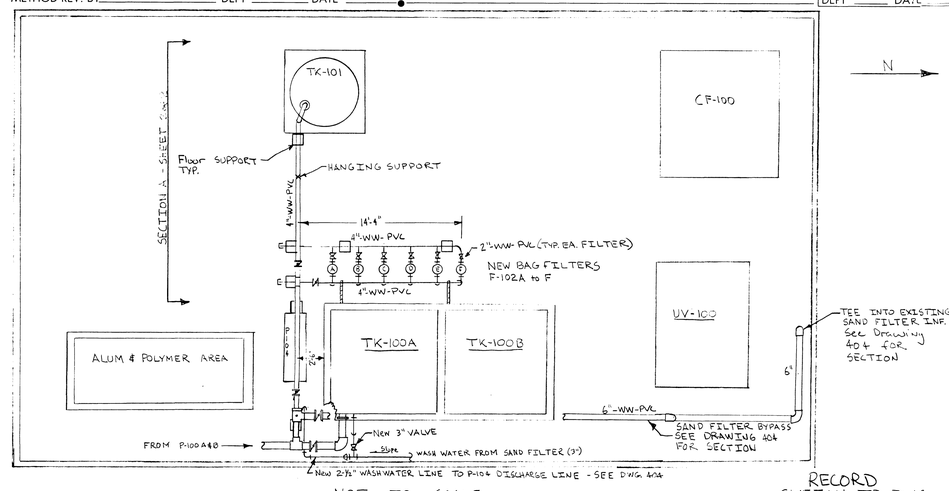

NOT TO SCALE

RECORD SKETCH TO DWG. CER47-400E-403

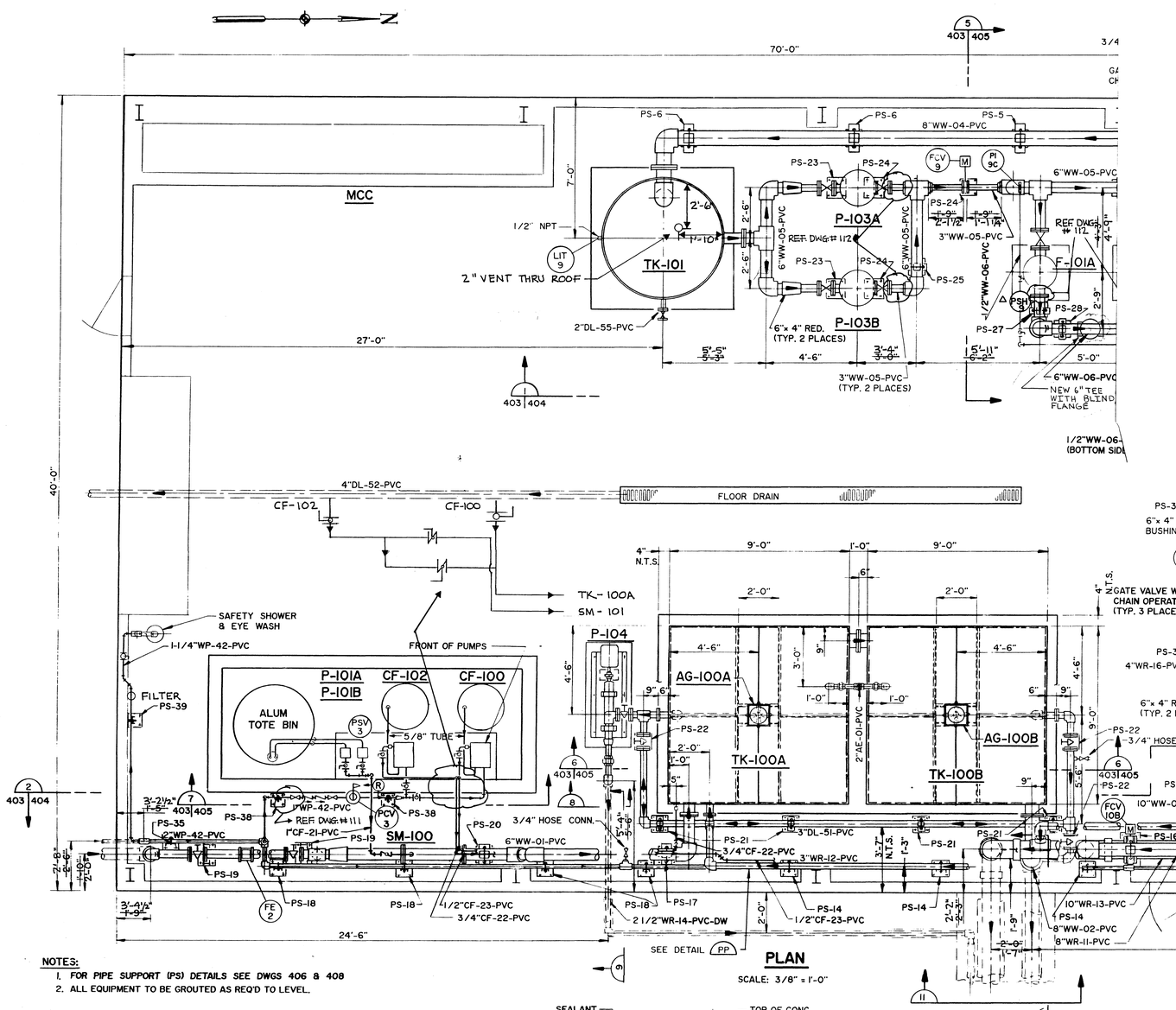

NOTES:
1. FOR PIPE SUPPORT (PS) DETAILS SEE DWGS 406 & 408
2. ALL EQUIPMENT TO BE GROUTED AS REQ'D TO LEVEL.

PLAN
SCALE: 3/8" = 1'-0"

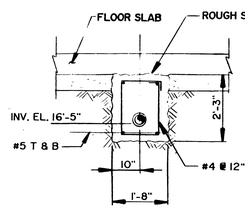

SECTION 8
SCALE: 1/2" = 1'-0"

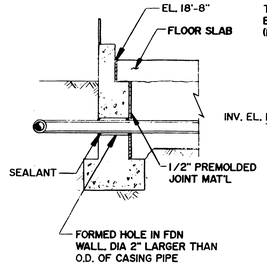

SECTION 9
SCALE: 1/2" = 1'-0"

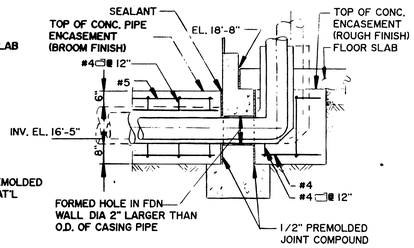

SECTION 10
SCALE: 1/2" = 1'-0"

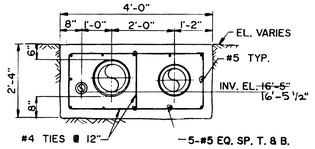

SECTION 11
SCALE: 1/2" = 1'-0"

GRAPHIC SCALE
SCALE: 3/8" = 1'-0"
SCALE: 1/2" = 1'-0"

$$ — THINK VALUE ENGINEERING — $$

Revisions			
Symbol	Descriptions	Date	Approved

ERM-New England, Inc.
205 Portland Street • Boston, Massachusetts

U.S. ARMY ENGINEER DISTRICT
CORPS OF ENGINEERS
OMAHA, NEBRASKA

Designed by: SPS
Drawn by: W.C.H.
Checked by: SPS.
Reviewed by: SCS
Submitted by: Chief, Section

NEW BEDFORD HARBOR MASSACHUSETTS
SUPERFUND HAZARDOUS WASTE CLEANUP
HOT SPOT OPERABLE UNIT
TREATMENT BUILDING
PIPING PLAN AND SECTIONS

Scale: As Shown
Date: DEC. 1991
Spec. No.: DACW45-92-R-0020
Contract No.: DACW45-92-C-0101
Drawing Code: CER47-400E-403

Environmental Resources Management, Inc.
Exton, Pennsylvania 19341 • (215) 524-3500

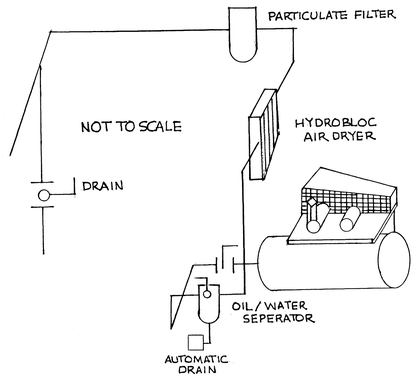

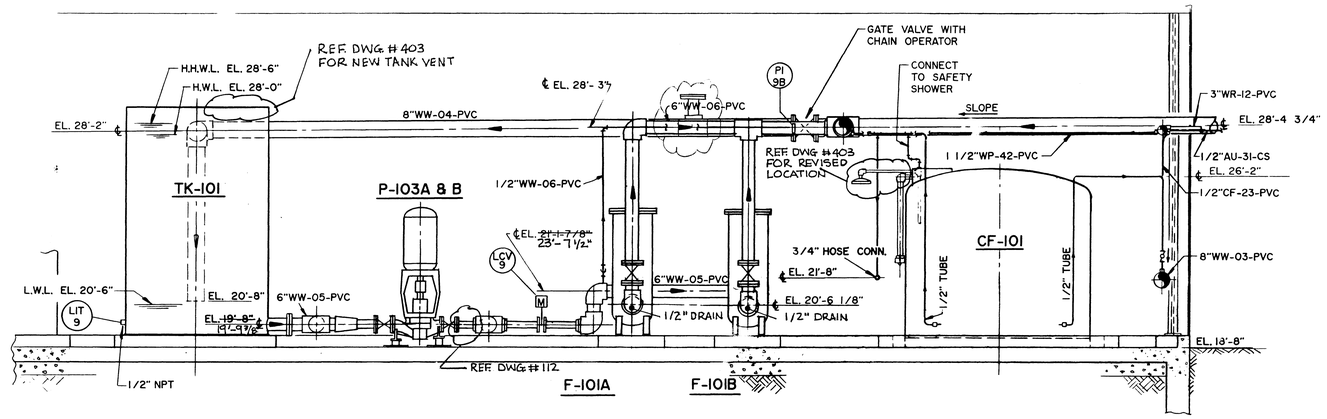

SECTION 1 / 403|404

SCALE: 3/8" = 1'-0"

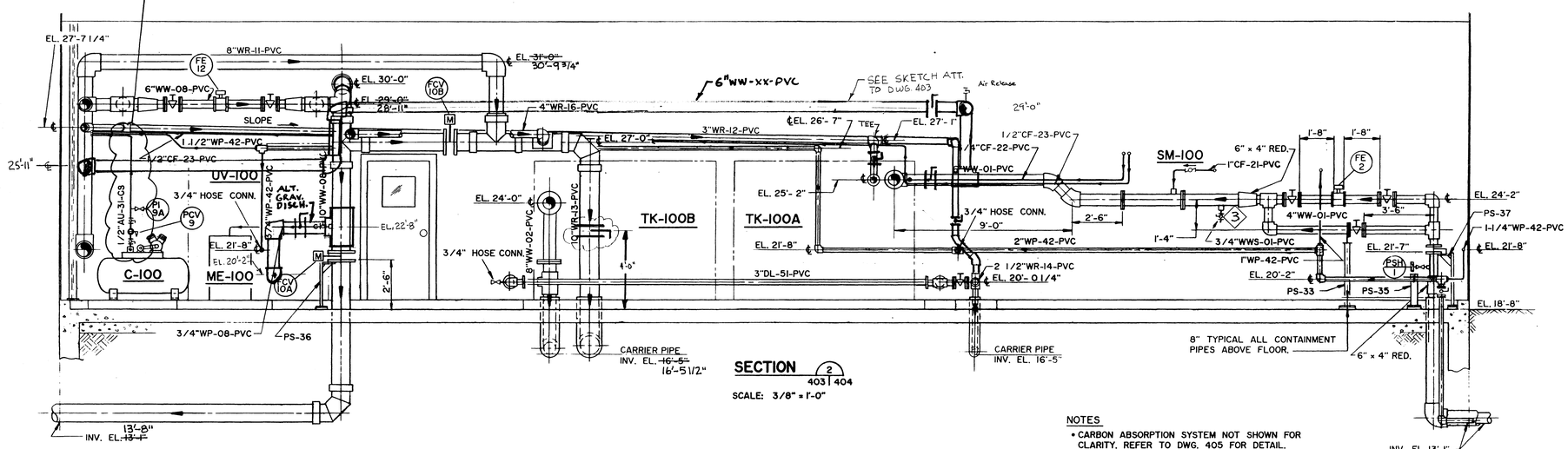

SECTION 2 / 403|404

SCALE: 3/8" = 1'-0"

NOTES

- CARBON ABSORPTION SYSTEM NOT SHOWN FOR CLARITY. REFER TO DWG. 405 FOR DETAIL.
- ALL PIPES UNDER THE BUILDING SLAB SHALL BE CONCRETE ENCASED PER DETAIL ON DWG. 403.

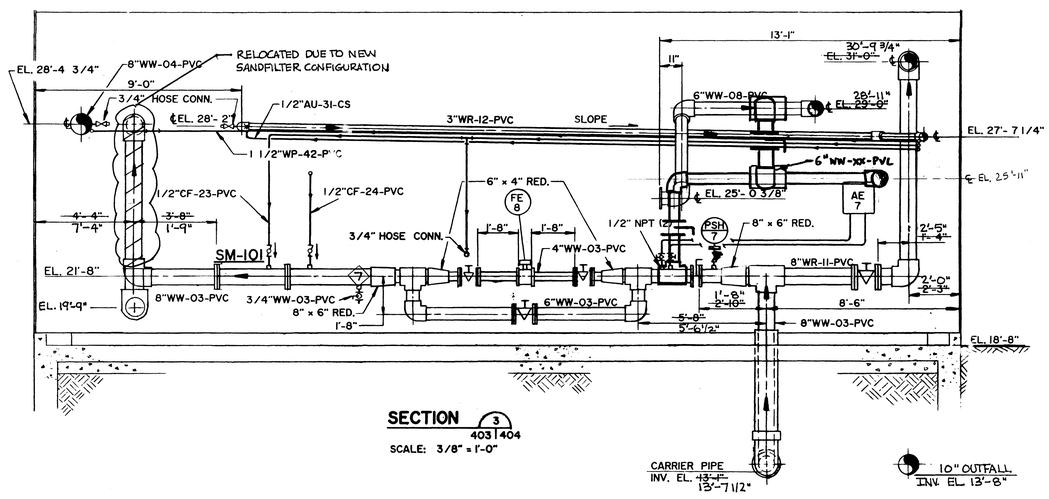

SECTION 3 / 403|404

SCALE: 3/8" = 1'-0"

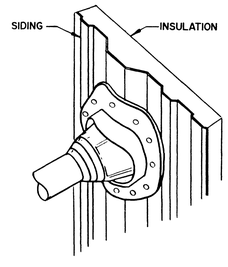

TYPICAL PIPE BOOT DETAIL FOR ALL PIPE PENETRATIONS (DEKITE PIPE FLASHING (BUILDEX) OR APPROVED EQUAL)

GRAPHIC SCALE

SCALE: 3/8" = 1'-0"

1" 0" 1" 2" 3" 4" 5"

COMMONWEALTH OF MASSACHUSETTS ALAN F. HASSETT CIVIL No. 30170 REGISTERED PROFESSIONAL ENGINEER

COMMONWEALTH OF MASSACHUSETTS JAMES D. FITZGERALD SANITARY No. 35664 REGISTERED PROFESSIONAL ENGINEER

Environmental Resources Management, Inc.
Exton, Pennsylvania 19341 • (215) 524-3500

$$ — THINK VALUE ENGINEERING — $$

Revisions			
Symbol	Descriptions	Date	Approved

ERM-New England, Inc.
205 Portland Street • Boston, Massachusetts

U.S. ARMY ENGINEER DISTRICT
CORPS OF ENGINEERS
OMAHA, NEBRASKA

Designed by: S.P.S.	NEW BEDFORD HARBOR — MASSACHUSETTS
Drawn by: W.C.H.	SUPERFUND HAZARDOUS WASTE CLEANUP
Checked by: S.P.S.	HOT SPOT OPERABLE UNIT
	TREATMENT BUILDING
	PIPING SECTIONS
Reviewed by: S.C.S.	Scale: As Shown — Date: DEC. 1991
Submitted by: Chief: Section	Spec. No.: DACW45-92-R-0020 — Contract No.: DACW45-92-C-0101 — Drawing Code: CER47-400E-404

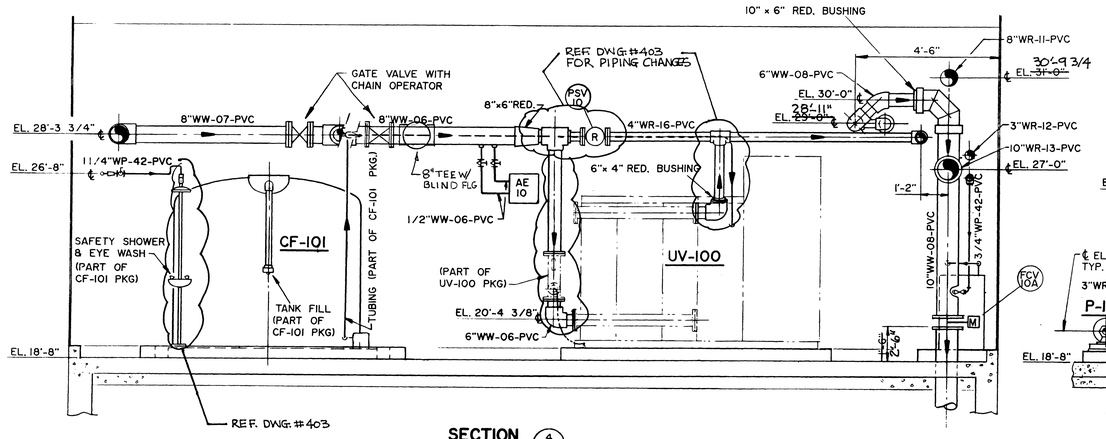

SECTION 4 / 403|405

SCALE: 3/8" = 1'-0"

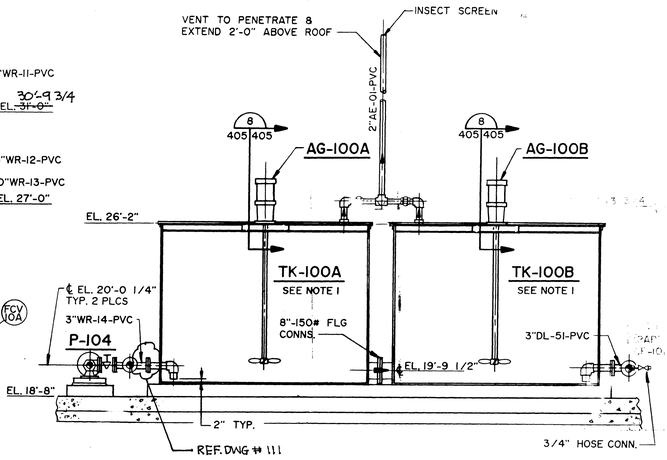

SECTION 6 / 403|405

SCALE: 3/8" = 1'-0"

NOTE:

1. 9'-0" × 9'-0" × 7'-0" HIGH STAINLESS STEEL FLOCCULATORS (TWO) WITH REINFORCED FIBERGLASS COVER (1/2" THK. MIN.), NOZZLES, ALL THE STRUCTURAL SUPPORTS REQ'D TO SUPPORT THE MIXER.

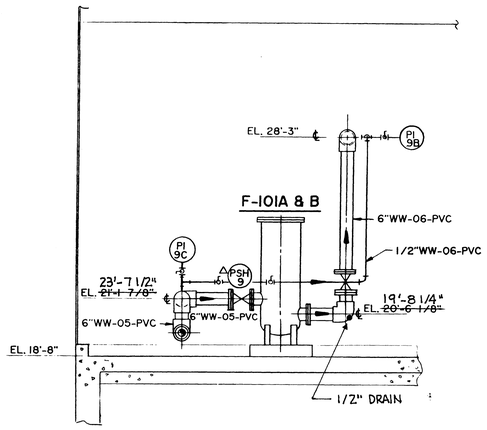

SECTION 5 / 403|405

SCALE: 3/8" = 1'-0"

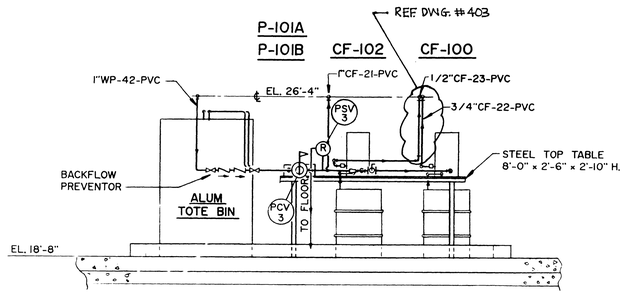

SECTION 7 / 403|405

SCALE: 3/8" = 1'-0"

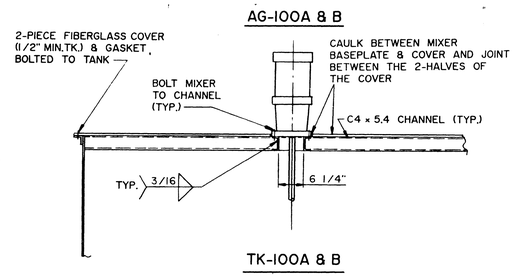

SECTION 8 / 405|405

GRAPIC SCALE

SCALE: 3/8" = 1'-0"

1' 0' 1' 2' 3' 4' 5'

$$ — THINK VALUE ENGINEERING — $$

Revisions

Symbol	Descriptions	Date	Approved

ERM-New England, Inc.
205 Portland Street • Boston, Massachusetts

U.S. ARMY ENGINEER DISTRICT
CORPS OF ENGINEERS
OMAHA, NEBRASKA

Designed by: S.P.S.
Drawn by: W.C.H.
Checked by: S.P.S.
Reviewed by: SCS
Submitted by: Chief, Section

NEW BEDFORD HARBOR MASSACHUSETTS
SUPERFUND HAZARDOUS WASTE CLEANUP
HOT SPOT OPERABLE UNIT
TREATMENT BUILDING
PIPING SECTIONS

Scale: As Shown
Date: DEC. 1991
Spec. No.: DACW45-92-R-0020
Contract No.: DACW45-92-C-0101
Drawing Code: CER47-400E-405

COMMONWEALTH OF MASSACHUSETTS ALAN F. HASSETT No. 35722 REGISTERED PROFESSIONAL ENGINEER

COMMONWEALTH OF MASSACHUSETTS JAMES D. FITZGERALD JR. No. 38684 REGISTERED PROFESSIONAL ENGINEER

Environmental Resources Management, Inc.
Exton, Pennsylvania 19341 • (215) 524-3500

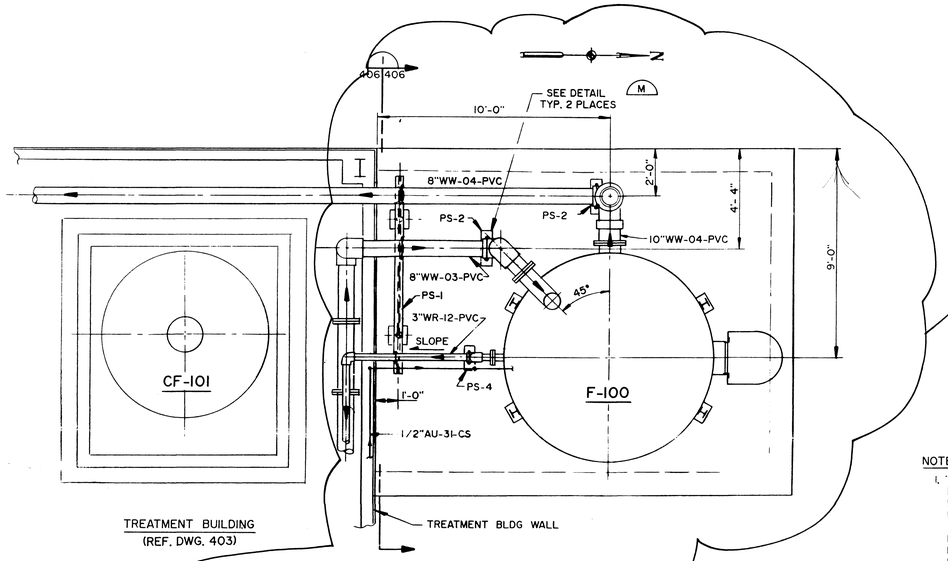

TREATMENT BUILDING
(REF. DWG. 403)

PLAN

SCALE: 3/8" = 1'-0"

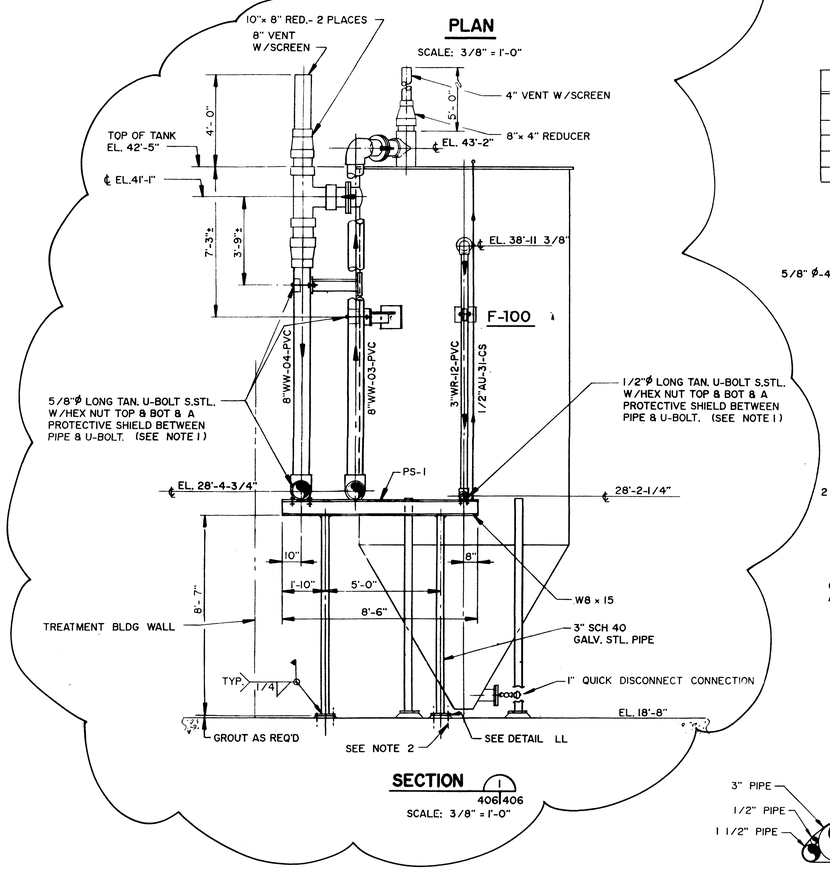

SECTION 1

406|406

SCALE: 3/8" = 1'-0"

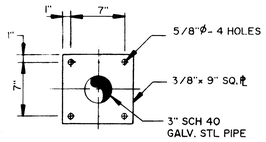

DETAIL LL

NO SCALE

LOCATION DETERMINED IN FIELD

6" PIPE
5/8"Ø U-BOLT
(SEE NOTE 1)

SEE ATTACHED DWG: TITLED CER47-400E-406 FOR NEW SANDFILTER, AND PIPING CONFIGURATION

BOLT CIRCLE(B.C.),HOLE SIZE & SPACING TO MATCH FLG

SEE PLAN FOR DETAIL DD &

"D"Ø-"E" HOLES

GROUT AS REQ'D

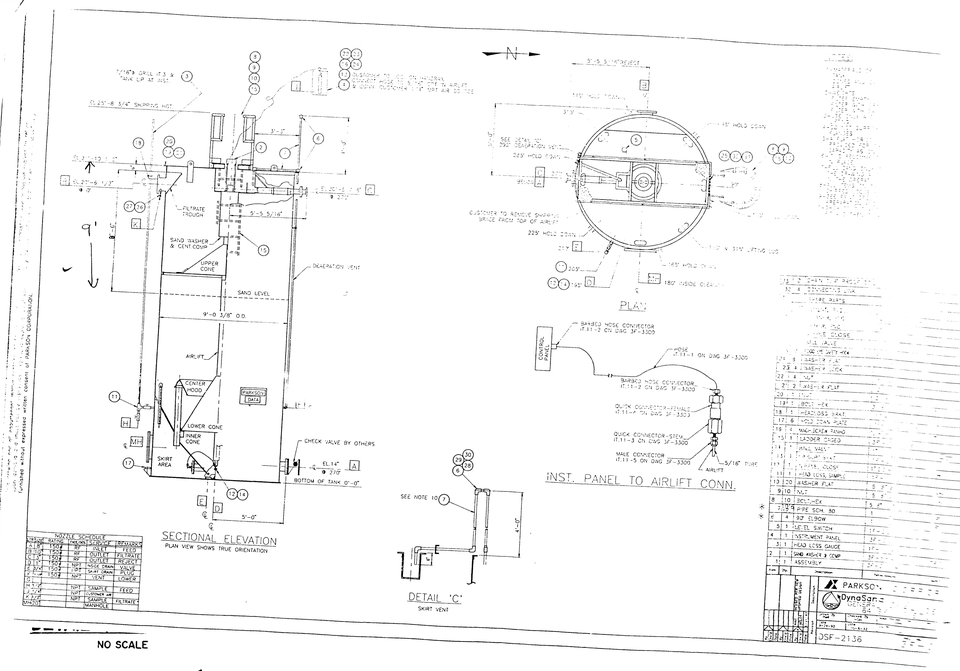

NO SCALE

NOTES

1. "U" BOLT TO BE LONG TANGENT 316SS WITH HEX NUTS BOTH SIDES OF STRUCTURAL MEMBER. USE 3/16" THICK x ONE DIAMETER LONG REINFORCED FIBERGLASS WRAPPED 1/3 THE CIRCUMFERENCE AROUND THE PIPE, FOR PROTECTIVE SHIELD BETWEEN PIPE & "U" BOLT. 1/8" THICK CUSHIONING MATERIAL (RUBBER, NEOPRENE OR APPROVED EQUAL) SHALL BE PROVIDED BETWEEN PIPE & STRUCTURAL MEMBER. TIGHTEN "U" BOLT.
2. ANCHOR BOLTS - 1/2"Ø WITH 3 1/2" MIN. EMBEDMENT. 304SS W/HEX NUT & WASHER.

TABLE FOR DETAILS DD THRU GG

DETAIL	150# FLG	"A"	"B"	"C"	"D"	"E"	"F"	"G"	"H"	"J"	"K"	"L"	SPRT	NO. REQ'D
DD	6"	9'-01/4"	1'- 3"	6"	7/8"	2	9 1/2"	1'- 6"	1'- 3"	8"	3 3/8"	4"	PS-9	1
EE	10"	11'- 11"	8'- 3"	7'- 5"	1"	4	1'-2 1/4"	1'- 10"	1'- 7"	1'- 1"	2 7/8"	6"	PS-16	1
FF	6"	8'- 10"	2'- 11"	2'- 2"	7/8"	2	9 1/2"	1'- 6"	1'- 3"	8"	3 3/8"	4"	PS-11	1
GG	8"	8'- 9"	2'- 11"	2'- 1"	7/8"	2	11 3/4"	1'- 6"	1'- 3"	8"	3 3/8"	5"	PS-12	1

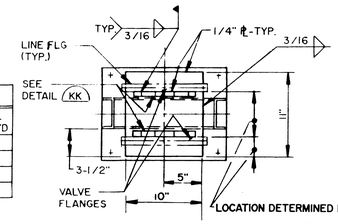

PLAN FOR DETAILS DD & GG

NO SCALE

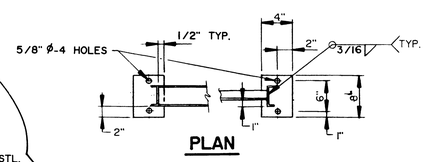

PLAN

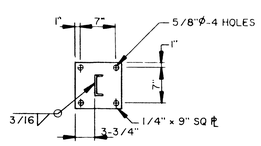

PLAN

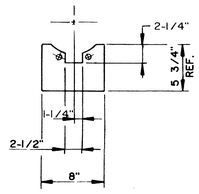

DETAIL KK

NO SCALE

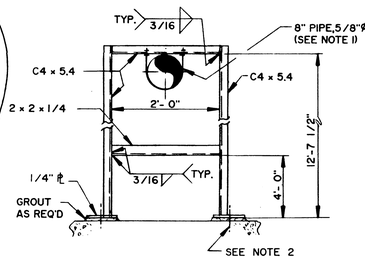

DETAIL HH

NO SCALE

SUPPORT NO. PS-13

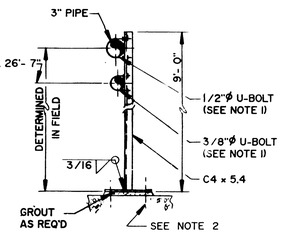

DETAIL JJ

NO SCALE

SUPPORT NO. PS-14(5 REQ'D)

GRAPHIC SCALE

3/8" 1'- 0" 1' 0 1' 2' 3' 4' 5'

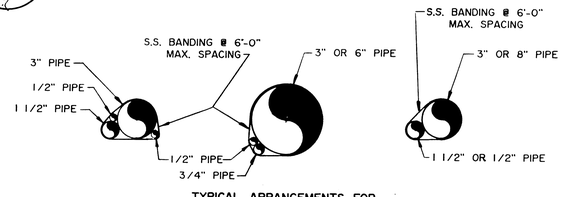

TYPICAL ARRANGEMENTS FOR BANDING PIPES TOGETHER

DETAIL PP

NO SCALE

COMMONWEALTH OF MASSACHUSETTS ALAN F. HAZZITT CIVIL No. 35709 REGISTERED PROFESSIONAL ENGINEER

COMMONWEALTH OF MASSACHUSETTS JAMES D. FITZGERALD SANITARY No. 95864 REGISTERED PROFESSIONAL ENGINEER

Environmental Resources Management, Inc.
Exton, Pennsylvania 19341 • (215) 524-3500

$$ — THINK VALUE ENGINEERING — $$

Revisions

Symbol	Descriptions	Date	Approved

ERM-New England, Inc.
205 Portland Street • Boston, Massachusetts

U.S. ARMY ENGINEER DISTRICT
CORPS OF ENGINEERS
OMAHA, NEBRASKA

Designed by: S.P.S. / W.H.H.
Drawn by: W.C.H.
Checked by: S.P.S. / W.H.H.
Reviewed by: SCS
Submitted by: Chief: Section

NEW BEDFORD HARBOR — MASSACHUSETTS

SUPERFUND HAZARDOUS WASTE CLEANUP

HOT SPOT OPERABLE UNIT

TREATMENT BUILDING

FILTER PIPING AND PIPE SUPPORT DETAILS

Scale: As Shown
Date: DEC. 1991
Spec. No.: DACW45-92-R-0020
Contract No.: DACW45-92-C-0101
Drawing Code: CER47-400E-406

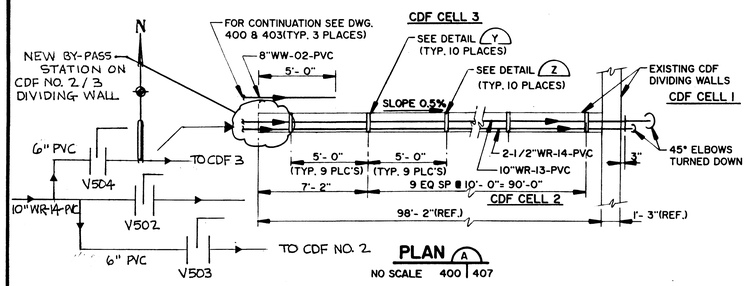

PLAN A
NO SCALE 400 | 407

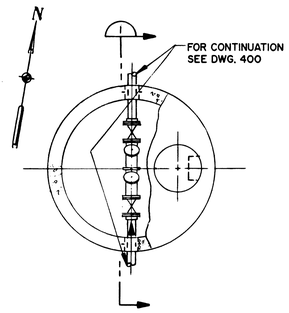

PLAN

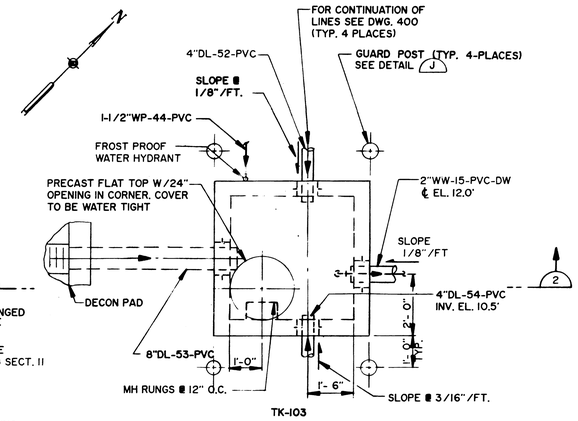

PLAN

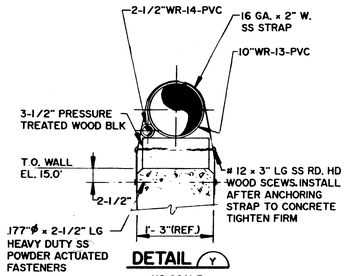

DETAIL Y
NO SCALE

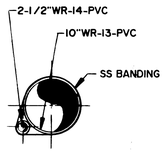

DETAIL Z
NO SCALE

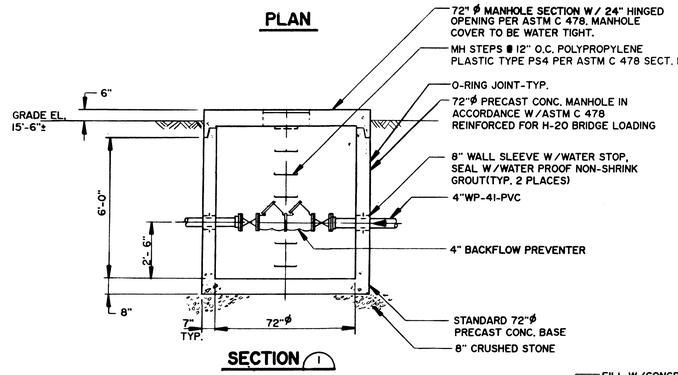

SECTION 1

DETAIL C
SCALE 3/8"=1'-0" 400 | 407

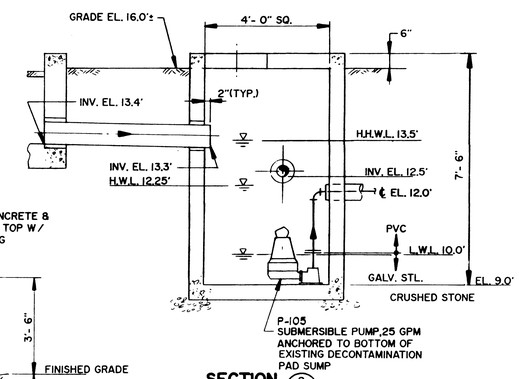

SECTION 2

DETAIL D
SCALE 1/2"=1'-0" 400 | 407

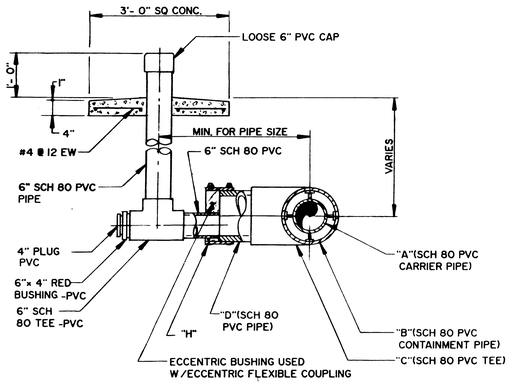

DETAILS E, F & G
NO SCALE 400 | 407

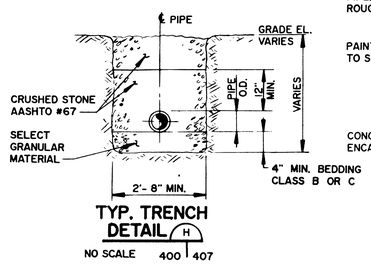

TYP. TRENCH DETAIL H
NO SCALE 400 | 407

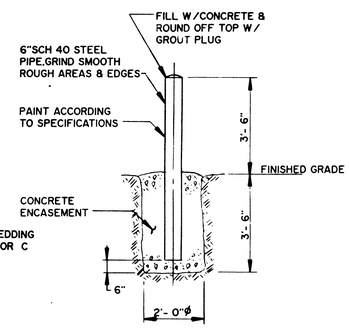

DETAIL J
NO SCALE 200 | 407

LEAK DETECTION RISER TABLE FOR DETAILS E, F & G						
DETAIL	"A"	"B"	"C"	"D"	"H"	PIPE DESIGNATION
E	2"	6"	6"	6"	FLEXIBLE COUPLING (6"x 6" PVC PIPE)	2"WR-15-PVC-DW
F	6"	10"	10"	10"	ECCENTRIC FLEXIBLE COUPLING(10"x 6" PVC PIPE)	6"WW-01-PVC-DW
G	8"	12"	12"	12"	ECCENTRIC FLEXIBLE COUPLING(12"x 6" PVC PIPE)	8"WW-03-PVC-DW

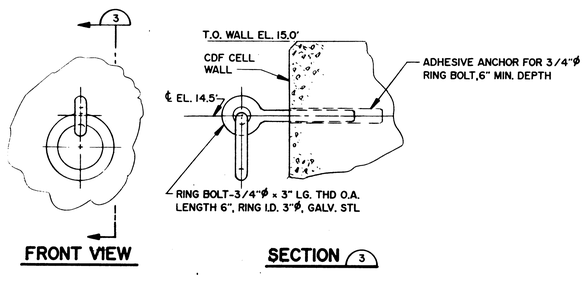

FRONT VIEW

SECTION 3

DETAIL K
NO SCALE 400 | 407

GRAPHIC SCALES

3/8"= 1'- 0" 1' 0 1' 2' 3' 4' 5' 6' 7'

1/2"= 1'- 0" 1' 0 1' 2' 3' 4' 5'

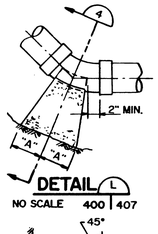

DETAIL L
NO SCALE 400 | 407

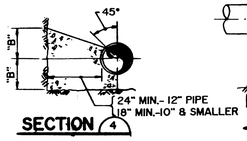

SECTION 4
NO SCALE

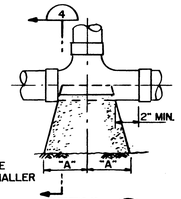

DETAIL M
NO SCALE 400 | 407

TABLE FOR DETAILS L & M (THRUST BLOCKS-2,000 PSF SOIL)								
SIZE	1/4 BENDS		1/8 BENDS		1/16 BENDS		TEES	
	"A"	"B"	"A"	"B"	"A"	"B"	"A"	"B"
6" OR LESS	16"	10"	9"	10"	6"	8"	10"	12"
8"	22"	13"	12"	13"	8"	10"	13"	16"
10"	26"	17"	14"	17"	10"	13"	16"	20"
12"	29"	21"	16"	21"	11"	16"	18"	24"

NOTE: BASED ON 100 P.S.I. STATIC PRESSURE PLUS A.W.W.A. WATER HAMMER. ALL BEARING SURFACES TO BE CARRIED TO UNDISTURBED GROUND.

TYP. THRUST BLOCK DETAIL

COMMONWEALTH OF MASSACHUSETTS ALAN F. HASSETT CIVIL No. 35780 REGISTERED PROFESSIONAL ENGINEER

COMMONWEALTH OF MASSACHUSETTS JAMES D. FITZGERALD SANITARY No. 35964 REGISTERED PROFESSIONAL ENGINEER

SAFETY DAYS

Environmental Resources Management, Inc.
Exton, Pennsylvania 19341 • (215) 524-3500

$$ — THINK VALUE ENGINEERING — $$

Revisions			
Symbol	Descriptions	Date	Approved

ERM-New England, Inc.
205 Portland Street • Boston, Massachusetts

U.S. ARMY ENGINEER DISTRICT
CORPS OF ENGINEERS
OMAHA, NEBRASKA

Designed by: SPS.
Drawn by: D. SWINEHART
Checked by: SPS.
Reviewed by: SCS
Submitted by: Chief: Section

NEW BEDFORD HARBOR MASSACHUSETTS
SUPERFUND HAZARDOUS WASTE CLEANUP
HOT SPOT OPERABLE UNIT
SITE & YARD PLAN
PIPING DETAILS

Scale: As Shown
Date: DEC. 1991
Spec. No.: DACW45-92-R-0020
Contract No.: DACW45-92-C-0101
Drawing Code: CER47-400E-407

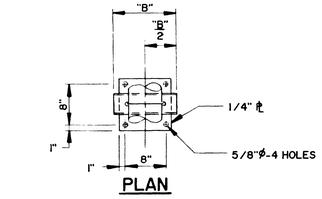

PLAN

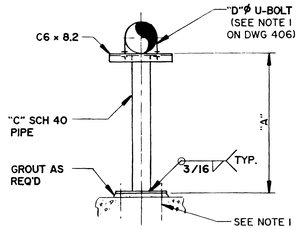

DETAILS (A) THRU (BB)

NO SCALE

TABLE FOR DETAILS A THRU BB							
DETAIL	PIPE SIZE	"A"	"B"	"C"	"D"	SPRT NO.	NO. REQ'D
A	8"	2'- 7"	1'- 3"	3"	5/8"	PS-7	1
B	6"	0'- 8"	1'- 0"	↑	↑	PS-25	1
C	6"	2'- 2"	1'- 0"	↑	↑	PS-26	1
D	8"	9'- 1"	1'- 3"	↑	↑	PS-6	2
E	8"	9'- 2"	1'- 3"	3"	5/8"	PS-5	2
F	3"	1'- 2"	0'- 9"	2"	1/2"	PS-21	4
G	6"	9'- 3-1/2"	1'- 0"	3"	5/8"	PS-28	1
H	6"	1'- 6"	1'- 0"	↑	↑	PS-27	2
J	8"	9'- 1-1/2"	1'- 3"	↑	↑	PS-30	1
K	6"	6'- 2"	1'- 0"	↑	↑	PS-17	1
L	6"	5'- 2"	1'- 0"	↑	↑	PS-20	1
M	8"	9'- 3-1/2"	1'- 3"	3"	5/8"	PS-2	2
N	3"	9'- 4"	0'- 9"	2"	1/2"	PS-4	1
BB	4"	9'- 3-1/2"	1'- 0"	3"	1/2"	PS-32	2

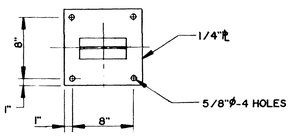

PLAN

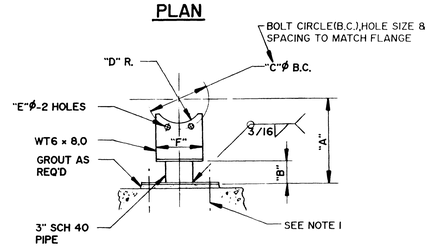

DETAILS (P), (R), (AA), (CC) & (Z)

NO SCALE

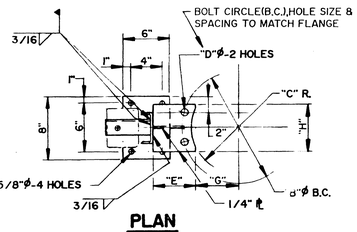

PLAN

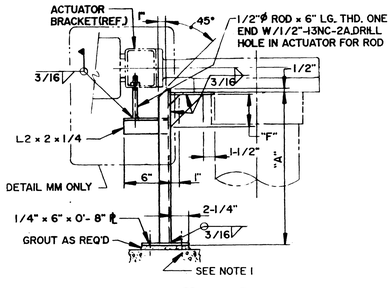

DETAILS (MM) & (NN)

NO SCALE

TABLE FOR DETAILS P,R,Z,AA & CC									
DETAIL	150# FLG	"A"	"B"	"C"	"D"	"E"	"F"	SPRT NO.	NO. REQ'D
P	3"	11"	4"	6"	2-1/2"	3/4"	6"	PS-24	3
R	4"	11"	3"	7-1/2"	3"	↑	↑	PS-23	2
AA	3"	1'- 3-1/2"	0'- 8-1/2"	6"	2-1/2"	↑	↑	PS-22	3
CC	4"	4'- 1"	3'- 5"	7-1/2"	3"	3/4"	6"	PS-33	1
Z	8"	9'- 6-1/2"	8'- 8-1/2"	11-3/4"	5"	7/8"	8"	PS-29	2

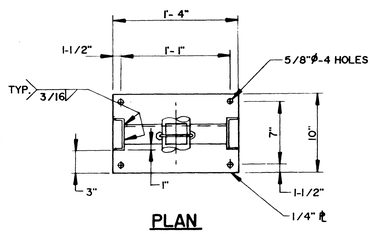

PLAN

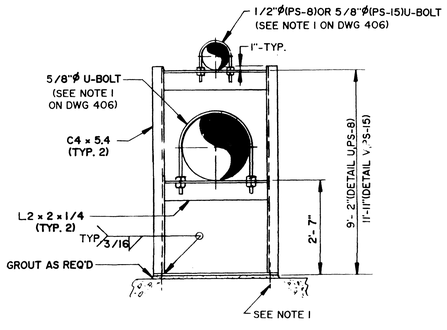

DETAILS (U) & (V)

SUPPORT NOS PS-8 & PS-15(1 EA)

NO SCALE

TABLE FOR DETAILS MM & NN											
DETAIL	150# FLG	"A"	"B"	"C"	"D"	"E"	"F"	"G"	"H"	SPRT NO.	FD
MM	10"	2'- 3-1/2"	1'- 2-1/4"	6"	1"	5-1/2"	4"	5-1/2"	6"	PS-36	
NN	4"	2'- 9"	7-1/2"	3"	3/4"	5-1/2"	4"	2-1/2"	6"	PS-37	

NOTE:

1. ANCHOR BOLTS-1/2"ø WITH 3-1/2" MIN. EMBEDMENT 304 SS W/HEX NUT & WASHER.

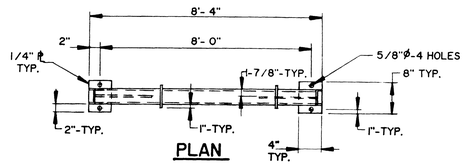

PLAN

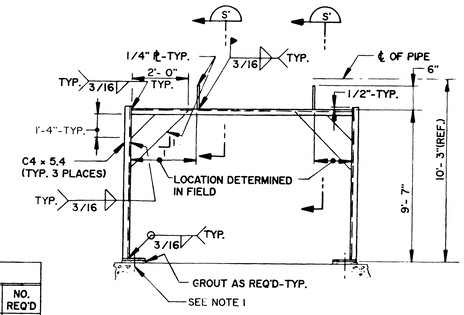

DETAIL (S)

SUPPORT NO. PS-31(1 REQ'D)

NO SCALE

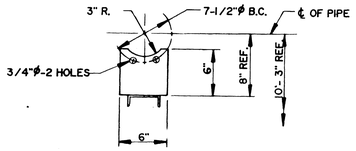

SECTION (S')

BOLT CIRCLE(B.C.),HOLE SIZE &
SPACING TO MATCH FLANGE

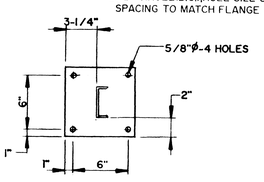

PLAN

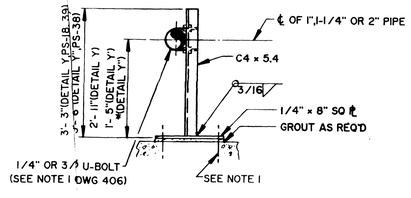

DETAILS (Y), (Y') & (Y")

SUPPORT NOS PS-18(4 REQ'D),PS-35 & PS-39(1 REQ'D)& PS-38(2 REQ'D)

NO SCALE

* DETERMINED IN FIELD

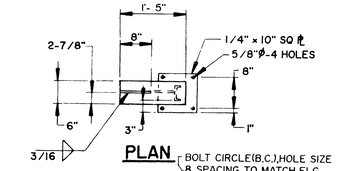

PLAN

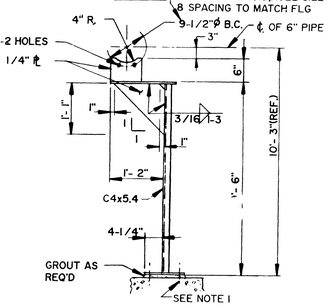

DETAIL (T)

SUPPORT NO. PS-34(1 REQ'D)

NO SCALE

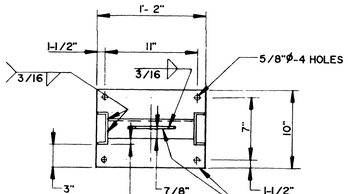

PLAN

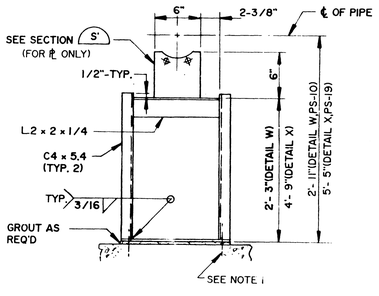

DETAILS (W) & (X)

SUPPORT NOS PS-10 & PS-19(2 EA)

NO SCALE

$$ — THINK VALUE ENGINEERING — $$

Revisions			
Symbol	Descriptions	Date	Approved

ERM-New England, Inc.
205 Portland Street • Boston, Massachusetts

U.S. ARMY ENGINEER DISTRICT
CORPS OF ENGINEERS
OMAHA, NEBRASKA

Designed by: W H H
Drawn by: D. SWINEHART
Checked by: W H H
Reviewed by: SCS
Submitted by: Chief: Section

NEW BEDFORD HARBOR MASSACHUSETTS
SUPERFUND HAZARDOUS WASTE CLEANUP
HOT SPOT OPERABLE UNIT
TREATMENT BUILDING
PIPE SUPPORT DETAILS

Scale: NO SCALE
Date: DEC. 1991
Spec. No.: DACW45-92-R-0020
Contract No.: DACW45-92-C-0101
Drawing Code: CER47-400E-408

Environmental Resources Management, inc.
Exton, Pennsylvania 19341 • (215) 524-3500

EXTERIOR ELECTRICAL LEGEND

EXISTING	NEW	
40'-4	#2 40'-4	Pole, No., Length, and Class as indicated
6M	6M 2 MT	Down guy and anchor. Strength in lbs. indicated (Anchor strength is based on holding power in Class 7 soil) "MT" indicates twin eye anchor rod
	II	Pole mounted roadway or area lighting installation, watts as indicated, Roman Numeral indicates IES type distribution
		Pole mounted floodlighting installation. Arrows indicate no. of luminaires and approx. horiz. aiming
4-#6 ACSR — OHP —	2#6 WP — OHP — •[4-#6 ACSR]	Overhead powerline-secondary or service drop. No., size and type of conductor and line voltage as indicated. •[Alternate format]
3#1 3.3 KV OHP —	— OHP 3#1 •[4-#6 ACSR]	Overhead powerline-primary distribution. No., size, and type of conductors and line voltage as indicated •[Alternate format]
— OHC —	— OHC —	Overhead communications line
—SL— 1#6	—AFL— •[1-#6 CWC]	Series street light and airfield lighting circuit respectively. No., size and type of wire as indicated •[Alternate format]
8. type USE —DBP— —DBC—	—DBP— —DBC—	Direct buried line. The letter "P" designates power (#8 min. if single-conductor cables are used), "C" a communications type line. Number, size, and type of cable as indicated
— 4P — — 2C —	— 4P — 3-#2, 15 KV 1-#2 600V +3 Spare — 2C —	Underground duct line, concrete encased (See specs). Numeral indicates quantity of ducts (4" min. if not identified). Letter "E" indicates electrical power line, "C" a communications type line). No., size and voltage of cable as indicated or per cross section detail
—UG—	— UG —	Underground distribution-misc. configurations. No. and size of conductors and raceway as described (•) or detailed
	HH#2 MH#4 A	Manhole or handhole. No., and type as indicated
EV	EV	Underground electrical equipment vault (Power or controls)
EP	EP	Electrical equipment in pad mounted cabinet or equipment assembly
	10	Individual transformer for overhead or fenced applicatons. ANSI voltage configuration as indicated, single numeral if present designates KVA rating
	75	Concrete pad mounted transformer installation ANSI (C84.1) voltage configuration as indicated.
	#4 —C—	Grounding system. Electrode and conductor (Bare copper) size as indicated
	PC	Photoelectric control relay
		See interior legend

LEGEND FOR ELECTRICAL DIAGRAMS

LVP 400A	Drawout type circuit breaker assembly ("LVP" indicates Low Voltage Power CB; "IC" indicates insulated case CB type). Size as indicated
	Drawout fuse assembly
2P 30	Molded case circuit breaker, fixed trip. Three pole unless designated '1P' or '2P'
3200 AF 3040 AT	Molded case CB of a given frame size with adjustable trip settings
	Fused cutout or fused switch assembly. Voltage rating and size as indicated
30A 3A	Fuse-power and control applications respectively. Size as noted
9KV	Surge arrestor - voltage rating and class as noted
15	Power factor correction capacitor-Numeral denotes KVAR rating
SS	Ground connection - to standard rod type electrode, to nearest structural steel (#6 [illegible] conductor if not shown)
	Control interface or operating relationship between 2 or more devices (key interlock between breakers, relay/contactor, etc.)
1600A	Feeder type bus duct or metal-enclosed bus assemblies (High voltage). (Cu bus if not identified). Ampacity as indicated
	Separable connector in primary distribution line (Elbow terminator and bushing combination)- loadbreak and non-loadbreak styles respectively
KWH	Watt-hour meter
(3) 3000/5	Current transformer (CT). Second numeral of transformation ratio identifies nominal current of metering/accessory circuit. Numeral in parenthesis indicates quantity of CT's
	Voltage (Potential) transformer (VT/PT), drawout and non-drawout. Quantity and voltage rating as indicated
AS A VS V	Ammeter and voltmeter with phase selector switch
GF 150 AF 0.2 sec.	Ground fault interrupting equipment (See specs) with trip setting at designated time delay. Interlocking control as indicated
52 67	Sensor, device or apparatus (Electrical or electromechanical); Numeral identifies type or function per ANSI/IEEE C37.2

INTERIOR ELECTRICAL LEGEND

	Existing and new, respectively (Note 5)
	Incandescent or H.I.D. luminaire - Letter identifies corresponding switch (Note 5)
	Wall fixture - Mounting height indicated (To fixture ℄) (Note 5)
	Fluorescent luminaire (The outlet symbol will normally be omitted in continuous row configurations) (Note 5)
	Ceiling exit light. Arrows identify direction of egress (Note 5)
	Wall exit light - Mounting height indicated (to ℄), arrows identify direction of egress (Note 5)
	Lighting contactor - no. of poles, current and voltage ratings as indicated
D	Dimming control for lighting (4'-0" up; Letter identifies switched fixtures)
S_{TO}	Manual starter with thermal overloads (4'-0" up; Letter identifies switched fixtures)
S_a	Single pole switch (4'-0" up; Letter identifies switched fixtures)
S_3^a	Three way switch (4'-0" up; Letter identifies switched fixtures)
S_4^a	Four way switch (4'-0" up; Letter identifies switched fixtures)
S_P^a	Single pole switch with pilot light (4'-0" up; Letter identifies switched fixtures)
30A GFI, P NG	Receptacle outlet, single and duplex recept. bodies respectively. Numeral adjacent identifies current rating in amps (No designation indicates 15A min.). Letters indicate: 'P' - matching plug required, 'GFI' device with integral ground fault protection, 'NG' - device w/no grounding provisions.
	Locking type receptacle with twist - lock type blades or locking ring (NEMA LX-XX series through 30A, Mil. specs over 30A)
20A	2P, 3W grounding type receptacle - 125V, conventional duplex & floor cleaning type outlets, NEMA 5-XX series
	Same as above but with isolated grounding provisions
	2P, 3W grounding type receptacle - 250V, NEMA 6-XX
	3P, 4W grounding type receptacle - 125/250V, NEMA 14-XX
	4P, 5W grounding type receptacle - 208Y/120V, NEMA L21-XX; 480Y/277V, NEMA L22-XX
	3P, 4W grounding type receptacle - 250V, NEMA 15-XX; 250V, NEMA L15-XX; 480V, NEMA L16-XX
	DC receptacle, 2P. See plans for voltage and grounding requirements
	400 Hz receptacle, 1Ø and 3Ø, see plans
3	Special receptacle, see supplemental legend or receptacle schedule on plans for blade/pin configuration and application
TV	TV signal outlet - master antenna, cable service or closed circuit
	Telephone outlet, single and duplex jack configurations (8 pin jacks). See specs. Open symbol designates exist. device. Symbol without leg(s) requires duplex jacks
	Receptacle strip assembly - Duplex NEMA 5-15 receptacles spaced at 2 or 4 ft. intervals (See Floor Plans) in surface mounted raceway. Wall mounted at 4 ft. AFF, consecutive phase connections (In 3Ø applications) unless noted otherwise
EWC ¾HP	Electric water cooler (Drinking Water Dispenser) Size as noted
SM SM R	Individual floor outlet assembly. 'SM' denotes surface mounted type (above floor service fitting), 'R' denotes recessed (Flush mounted) type, see specs
UF P 3" UF C 7" UFD	Multioutlet configuration in underfloor duct system (See specs). Open circle denotes blank insert location, solid denotes a device installation; 'P' indicates a power duct with duplex receptacles (NEMA 5-15), 'C' denotes communications duct w/bushed fitting; figures identify nominal width; UFD identifies a section of feeder duct (No inserts)
	Relocatible service post assembly - length as required to extend above suspended ceiling
12" x 4"	Cable tray for communications and data processing, dimensions as indicated (W x D)
TTB-2 TTC#4 36x24x6	Telephone terminal board (Plywood backboard); telephone terminal cabinet, size as indicated

1'-0" UP UNLESS OTHERWISE INDICATED OR REQUIRED BY NOTE 3

FAC FAC	Fire alarm control provisions. (See specs). Solid border indicates new equipment, open border existing
FAA FAA	Fire alarm annunciation provisions, w/or w/o graphic representation, see specs
FST FST	Fire alarm signal transmitting provisions (with antenna for FM radio type), see specs
F	Manual fire alarm station - 5'-0" up
F F(C) F	Fire alarm warning device - bell, chime and horn, 7'-6" A.F.F.
F	Fire alarm warning device, visible only - flashing light
F(H)	F.A. warning device, combined audible and visible - flashing light with a bell, chime, horn or minihorn (Denoted by internal letters B, C, H or M)
H H CR	Heat detector - undifferentiated symbol indicates fixed temperature or combination F.T. and rate of rise type, see specs; 'CR' indicates compensated rate ("rate anticipation") type with tubular sensing element required (Example: Fenwal Model 27127)
I OR S P	Smoke detector. The letter 'I' or 'P', if present, stipulates ionization or photoelectric type. Where detectors are shown in pairs, locations are in supply and return ducts, a single detector would be installed in the supply duct if location is not otherwise indicated
D OR DD	Duct type smoke detector
WFI ACV OSY	Fire alarm contacts at water flow indicators, alarm check valves, and OSY valves, see Mech. specs
EF-3 M 2HP	Motor - use and size as indicated
#3 2S	Motor controller - magnetic or as indicated, upper numeral designates NEMA size; lower letter, if used, indicates: 'R' - reversing type, '2S' - two speed type
	Combination starter w/externally operated disconnect
	Pushbutton control station - 1, 2, or 3 buttons
2P SS	Selector switch (Separate from starter)- 2 position or 3 position as indicated. If not specified elsewhere, legend plate designations will be 'ON-OFF' and 'MAN-OFF-AUTO' (or 'H.O.A.)
T	Thermostat - see Mech. specs, 5'-0" up
MCC-2	Motor control center, free standing w/no. of 20" wide (min) vertical sections indicated. See diagram and/or schedule for sizes, ratings, and loads
KWH KWD	Kilowatt-hour meter with demand registers
LP1 B	Lighting and appliance type panelboard - flush mounted and surface mounted types, see corresponding panel schedule. Open symbol indicates existing
	Distribution type panel
MSB MSG MSB	Main Switch Board or Main Switch Gear (abbreviated or spelled out), see Floor Plans and diagrams for dimensions, clearances, and electrical ratings
	Disconnect switch, size and type as indicated (or 3P, 240V, 30A min)
400A 30A 30/25	Bus duct assembly with plug-in power box capability at 2' intervals, current rating as indicated. Open circle represents a position with blank cover only, solid circle a plug in box with breaker or switch (see specs), receptacle symbol identifies a box with receptacle attached (figures indicate rating of receptacle and overcurrent device)
EPS	Emergency power system for egress lighting - battery inverter set (or forward transfer UPS), ratings and physical size as indicated
E	Battery operated emergency light set, no. of luminaire heads as indicated
—E— E or E	Feeder, device or fixture, and fluorescent type fixture, resp. supplied from an emergency circuit. The shaded portion of the fluorescent symbol indicates 2 lamps of a 3 or 4 lamp fixture are supplied from emergency power. A 1-lamp or 2-lamp fixture will be shown entirely shaded or unshaded with the 'E' annotation
J	Junction box, 4" square unless noted otherwise
L2, 4, 6	Branch circuit and feeder wiring. Short, long, single hooked and double hooked hash marks represent phase conductor, neutral, equipment ground, and isolated equipment ground (as applicable). Arrows and letter/numerals identify home-run circuits. If hash marks are omitted between home-runs, transition segments, and end-of-line devices, required quantity is understood to apply to all unmarked intervening segments . A circuit without any designation indicates the circuit is two-wire.

2" C	Limits of conduit or sleeve
	Capped conduit
— CO —	Conduit only - no conductors, pull wire if over 50'
— UF —	Comm or power feeder installed under floor slab in coated R.S. conduit unless indicated otherwise
	Light line - existing, or by other trades
	Heavy line - new electrical work
- - - - -	Future work or electrical item repeated for clarity (to lighting sheet from power or comm dwg., across match lines, etc.)
X XR	Existing equipment; existing equipment as relocated (new locaion)
— X —	Existing feeder (alternate method)

NOTES:

1. For general notes and non-electrical symbols, see Legend. Also refer to Abbreviations sheet.
2. Supplemental electrical legends may appear in this set of drawings to establish symbols for items not covered by this sheet or to indicate specific conditions in lieu of symbols shown on this sheet.
3. For electrical device mounting heights in masonry construction, see Standard Drawing No. 40-15-01, sh 2.
4. Letters such as "WP", "EP" adjacent to any symbol indicate special construction is required. See Abbreviations sheet for definitions.
5. Electric light fixtures are identified by either or both of the following methods:
   (a) [203] indicates fixture type, per fixture schedule, for entire room or area when adjacent to the room name or number designation or for single fixture when adjacent to the fixture symbol.
   (b) (B) capital letter or fixture designation inside or adjacent to symbol indicates fixture type for each fixture per fixture schedule.
6. Sizes of wire and cable are based on copper conductors unless indicated otherwise.
7. Where more than one symbol format is shown, the preferred form is shown first.

MAHENDRA P. MISRA, REGISTERED PROFESSIONAL ENGINEER No. 02145, COMMONWEALTH OF PENNSYLVANIA

Mahendra P. Misra 11/11/91

"TEMPORARY PERMIT MASSACHUSETTS 1991-99 PE. "

ALAN F. HASSETT, CIVIL, No. 35702, REGISTERED PROFESSIONAL ENGINEER, COMMONWEALTH OF MASSACHUSETTS

Al F. Hassett

JAMES FITZGERALD, SANITARY, No. 35664, REGISTERED PROFESSIONAL ENGINEER, COMMONWEALTH OF MASSACHUSETTS

ISE INTEGRATED SYSTEMS ENGINEERING — ENGINEERING CONSULTANTS, A PROFESSIONAL CORPORATION, 997 OLD EAGLE SCHOOL ROAD - SUITE 205 WAYNE, PA 19087 (215) 971-1900

Environmental Resources Management, Inc. Exton, Pennsylvania 19341 • (215) 524-3500

ERM

$$ — THINK VALUE ENGINEERING — $$

Revisions			
Symbol	Descriptions	Date	Approved

The ERM Group ERM-New England, inc. 205 Portland Street • Boston, Massachusetts

U.S. ARMY ENGINEER DISTRICT CORPS OF ENGINEERS OMAHA, NEBRASKA

Designed by:	NEW BEDFORD HARBOR MASSACHUSETTS
Drawn by: D.R.S.	SUPERFUND HAZARDOUS WASTE CLEANUP, HOT SPOT OPERABLE UNIT
Checked by: [illegible]	ELECTRICAL LEGEND
Reviewed by: SCS	Scale: As Shown — Date: DEC. 1991
Submitted by: Al F. Hassett, Chief Section	Spec. No. DACW45-92-R-0020; Contract No. DACW45-92-C-0101 — Drawing Code: CER47-400E-500

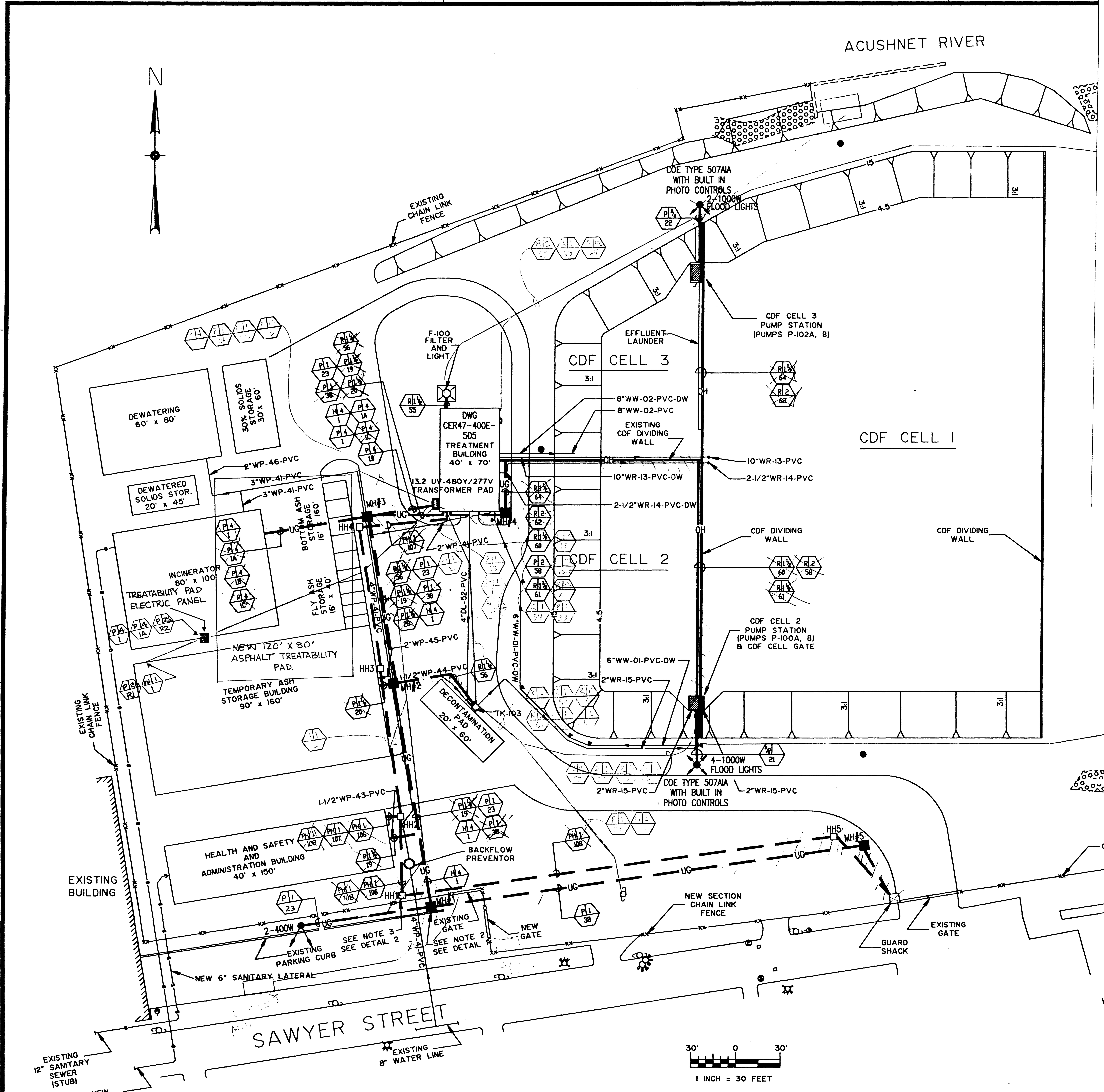

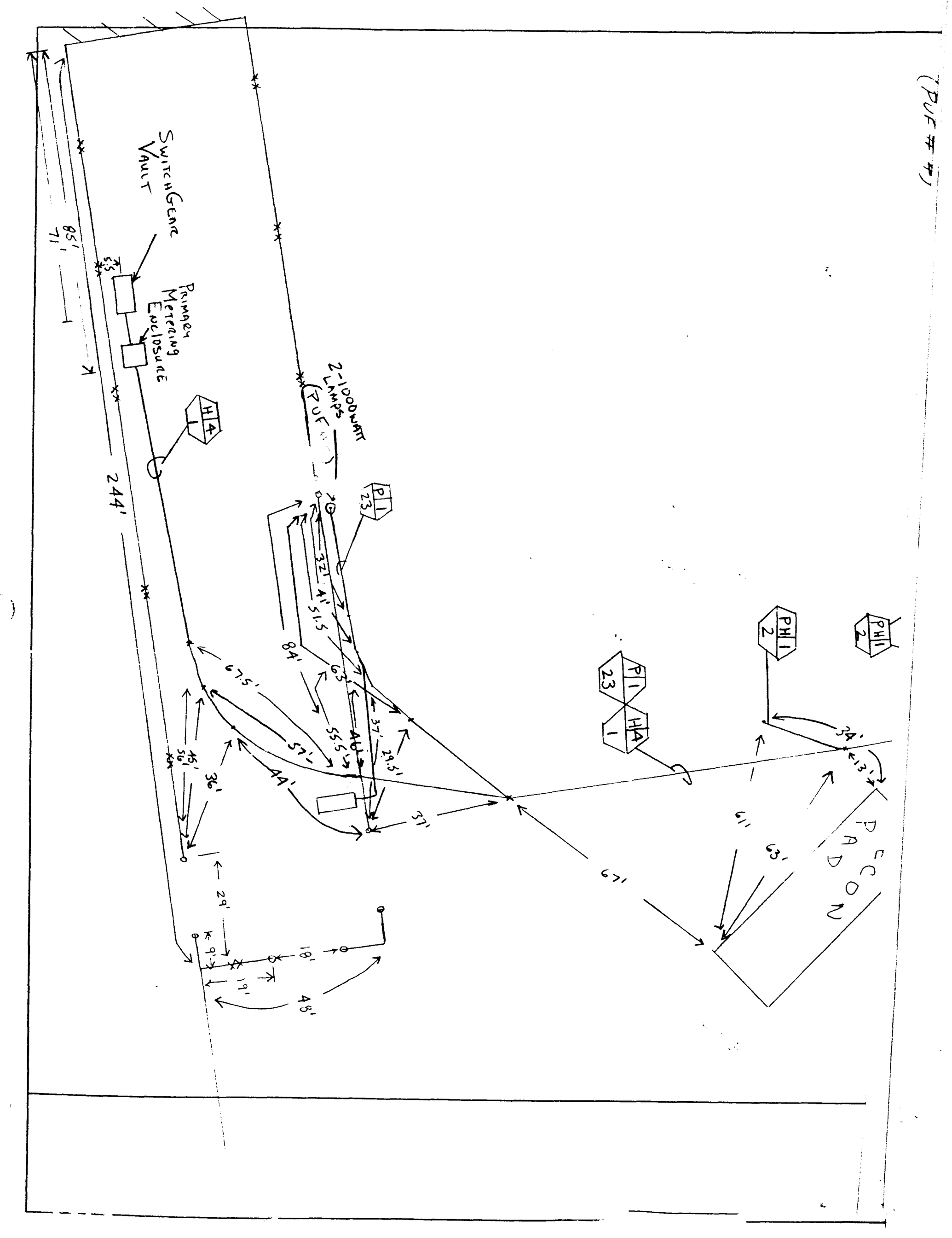

CLIENT/SUBJECT CEMAE / NBH - Tim Mezendes SHEET 1 of 1
W.O. NO.
TASK DESCRIPTION Rubb Electrical Feed Swing Points TASK NO.
PREPARED BY D. Chisholm DEPT 1242 DATE 6/25/99
MATH CHECK BY ____ DEPT ____ DATE ____
METHOD REV. BY ____ DEPT ____ DATE ____
APPROVED BY
DEPT ____ DATE ____

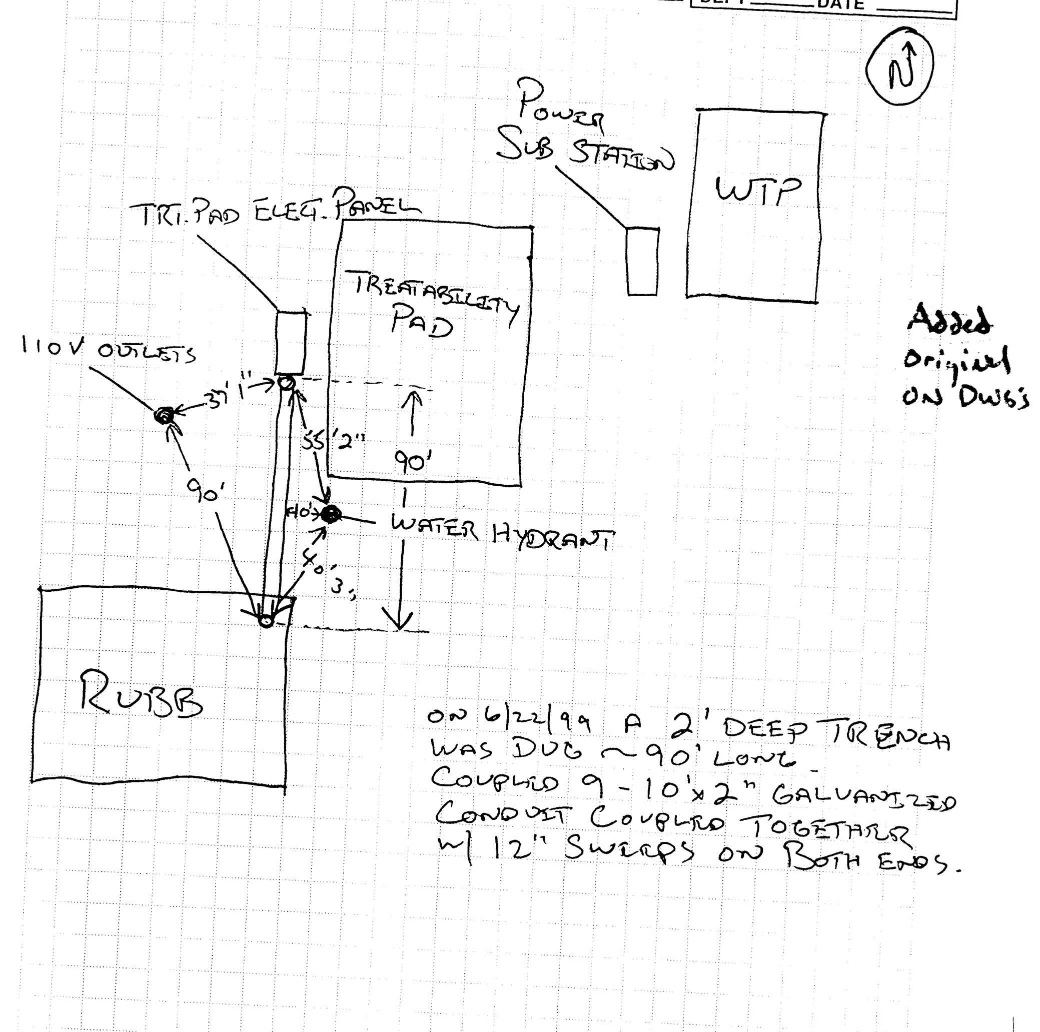

Added original on Dwgs

ON 6/22/99 A 2' DEEP TRENCH WAS DUG ~90' LONG. COUPLED 9 - 10'x2" GALVANIZED CONDUIT COUPLED TOGETHER w/ 12" SWEEPS ON BOTH ENDS.

RFW 10-05-003/A-5/85
512-5643

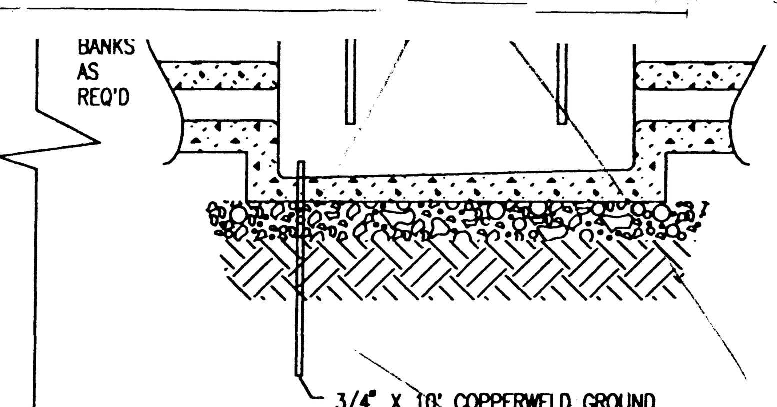

1 / 501 MANHOLE (TYPICAL)
APPROX SIZE 45"(W) X 45"(L) X 48"(H)

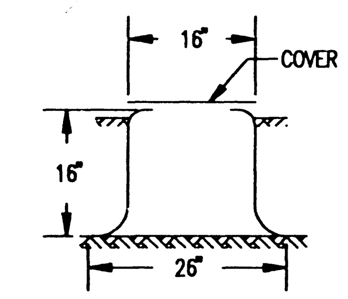

DIMENSIONS SHOWN ARE APPROX.
SPLICE BOX TO BE COMPLETE WITH COVER AND STAINLESS STEEL BOLTS. THREADS TO BE COATED WITH ANTISIEZE COMPOUND.

2 / 501 HAND HOLE SPLICE BOX (HH)
(TYPICAL)

NOTES:

1. THIS DRAWING HAS BEEN PREPARED FROM INFORMATION CONTAINED IN AUTOCAD DRAWING FILE: 888TOPO.DWG RECEIVED ON: 17JAN91 CREATED BY: ATLANTIC DESIGN ENGINEERS, INC., SANDWICH, MA.
2. 13.2 KV SERVICE FEEDER FROM COMMONWEALTH ELECTRIC TO BE SPLICED IN MANHOLE (MH 1)
3. TELEPHONE WIRES FROM TELEPHONE CO. TO SPLICED IN HAND HOLE (HH 1) SPLICE BOX.

COMMONWEALTH OF PENNSYLVANIA REGISTERED PROFESSIONAL MAHENDRA P. MISRA ENGINEER

Mahendra P. Misra 11/11/91
"TEMPORARY PERMIT MASSACHUSETTS 1991-99 PE."

COMMONWEALTH OF MASSACHUSETTS ALAN F. HASSETT CIVIL No. 35702 REGISTERED PROFESSIONAL ENGINEER

Alan F. Hassett

COMMONWEALTH OF MASSACHUSETTS JAMES D. FITZGERALD SANITARY No. 35664 REGISTERED PROFESSIONAL ENGINEER

ISE INTEGRATED SYSTEMS ENGINEERING — ENGINEERING CONSULTANTS, A PROFESSIONAL CORPORATION
997 OLD EAGLE SCHOOL ROAD - SUITE 205 WAYNE, PA 19087 (215) 971-1900
CAD FILE: ERMX5010\ERMX1001 PLOTTED: 11/4/91_14:44

Environmental Resources Management, Inc.
Exton, Pennsylvania 19341 (215) 524-3500
The ERM Group

$$ - THINK VALUE ENGINEERING - $$

Revisions

Symbol	Descriptions	Date	Approved

The ERM Group — ERM-New England, Inc. 205 Portland Street • Boston, Massachusetts

U.S. ARMY ENGINEER DISTRICT
CORPS OF ENGINEERS
OMAHA, NEBRASKA

Designed By: M.M.
Drawn By: T.X.
Checked By: J.M.
Reviewed By: SCS
Submitted By: Alan F. Hassett
Chief: Section

NEW BEDFORD HARBOR MASSACHUSETTS
SUPERFUND HAZARDOUS WASTE CLEANUP
HOT SPOT OPERABLE UNIT
TREATMENT BUILDING
SITE SERVICES

Scale:
Date: DEC. 1991
Spec. No.: DACW45-92-R-0020
Contract No.: DACW45-92-C-0101
Drawing Code: CER47-400E-501

4 3 2 1
D C B A

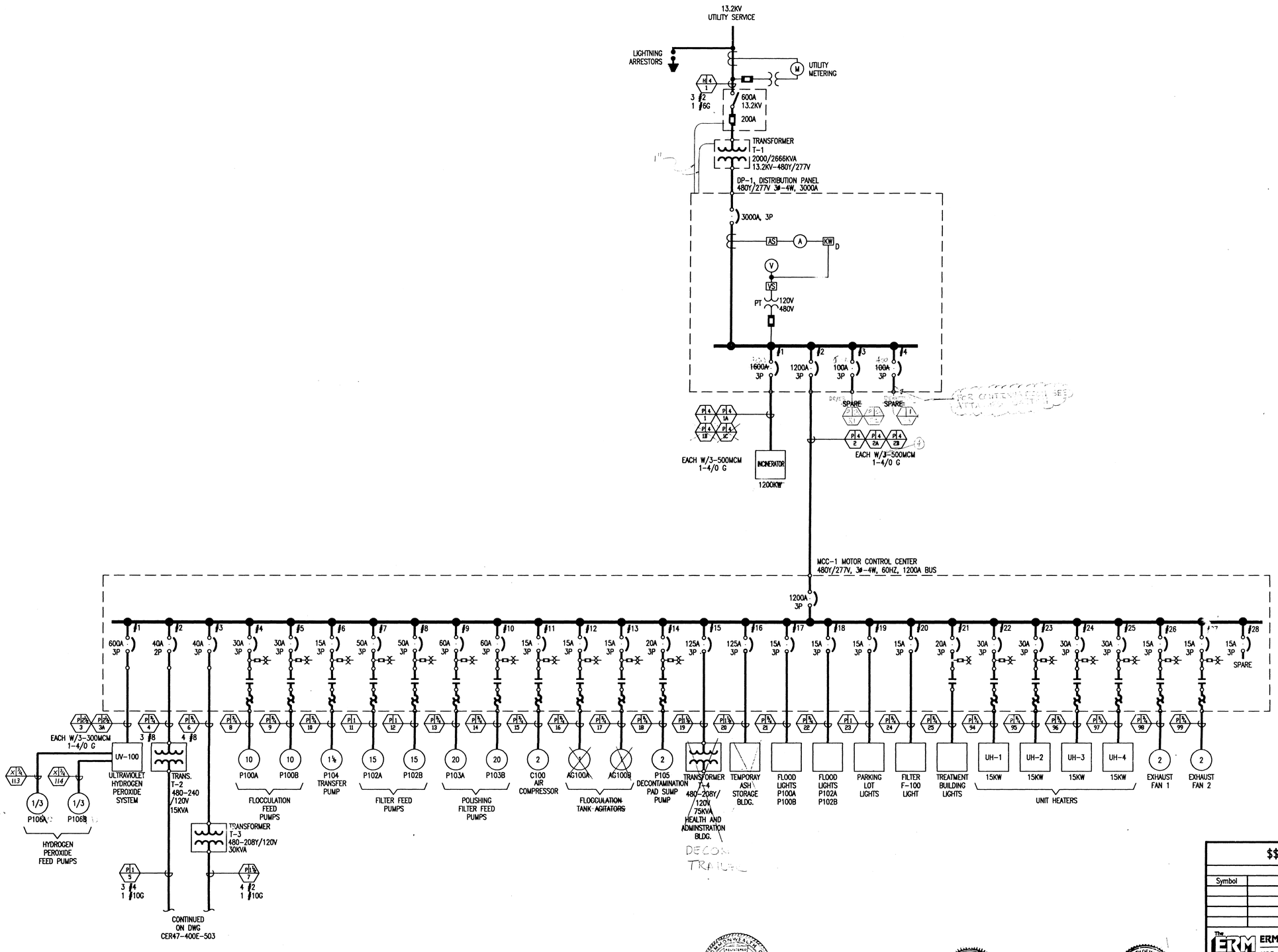

NOTES:

1. FOR LOCATION OF DP-1, MCC-1, TRANSFORMER, METERING CABINET AND 13.2KV SWITCH REFER TO DWG #CER47-400E-505

Mahendra P. Misra 11/4/91

"TEMPORARY PERMIT MASSACHUSETTS 1991-99 PE."

Alan F. Hassett

ISE INTEGRATED SYSTEMS ENGINEERING — ENGINEERING CONSULTANTS, A PROFESSIONAL CORPORATION
897 OLD EAGLE SCHOOL ROAD – SUITE 205 WAYNE, PA 19087 (215) 971-1900
CAD FILE: ERMX5010\ERMX1002 PLOTTED: 11/4/91_14:07

Environmental Resources Management, Inc.
Exton, Pennsylvania 19341 (215) 524-3500

$$ – THINK VALUE ENGINEERING – $$

Revisions

Symbol	Descriptions	Date	Approved

ERM-New England, Inc.
205 Portland Street • Boston, Massachusetts

U.S. ARMY ENGINEER DISTRICT
CORPS OF ENGINEERS
OMAHA, NEBRASKA

Designed By: M.M.
Drawn By: B.W.
Checked By: J.M.
Reviewed By: SCS
Submitted By: Alan F. Hassett
Chief: Section

NEW BEDFORD HARBOR MASSACHUSETTS
SUPERFUND HAZARDOUS WASTE CLEANUP
HOT SPOT OPERABLE UNIT
TREATMENT BUILDING
SINGLE LINE DIAGRAM

Scale:
Date: DEC. 1991
Spec. No.: DACW45-92-R-0020
Contract No.: DACW45-92-C-0101
Drawing Code: CER47-400E-502

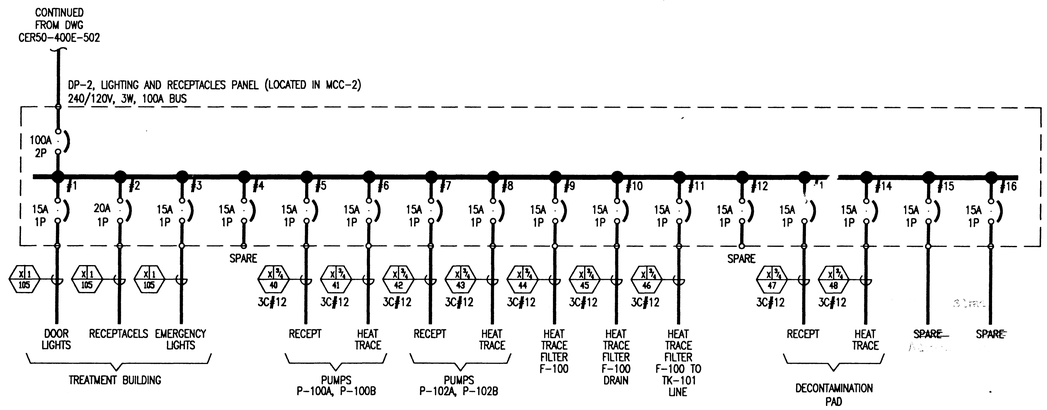

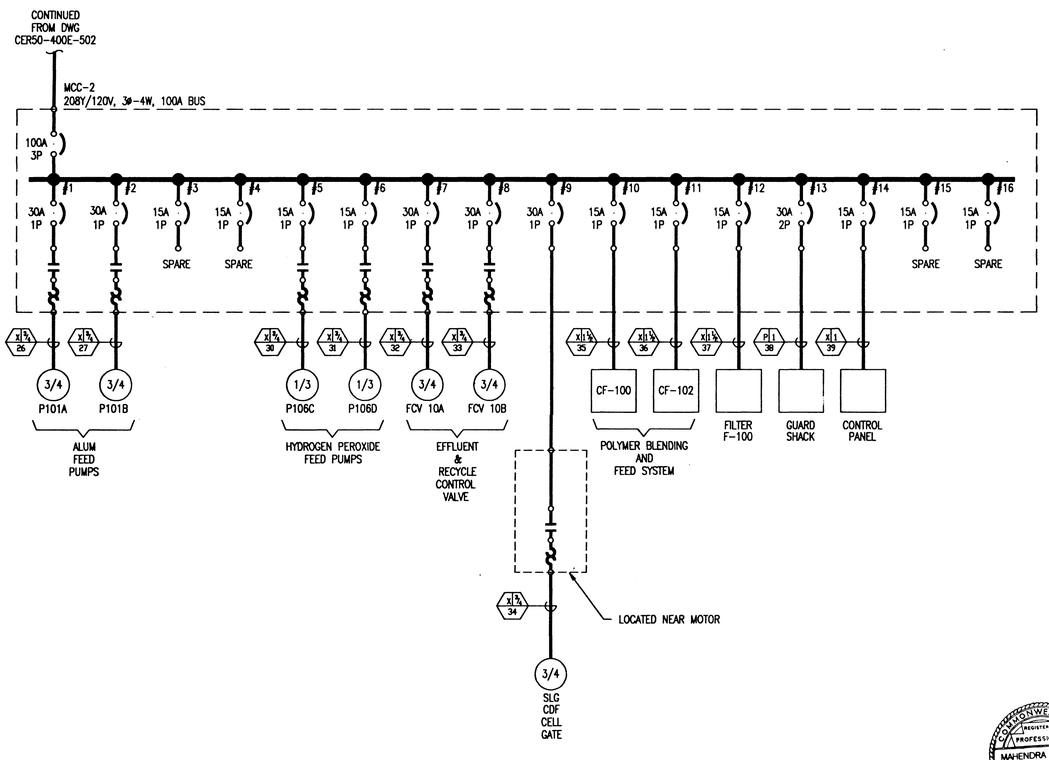

NOTES:

1. FOR LOCATION OF MCC-2 AND DP-2 REFER TO DWG #CER47-400E-505

Mahendra P. Misra 11/4/91

"TEMPORARY PERMIT MASSACHUSETTS 1991-99 PE."

Alan E. Hassett

$$ – THINK VALUE ENGINEERING – $$

Revisions

Symbol	Descriptions	Date	Approved

ERM-New England, Inc.
205 Portland Street • Boston, Massachusetts

U.S. ARMY ENGINEER DISTRICT
CORPS OF ENGINEERS
OMAHA, NEBRASKA

NEW BEDFORD HARBOR MASSACHUSETTS
SUPERFUND HAZARDOUS WASTE CLEANUP
HOT SPOT OPERABLE UNIT
TREATMENT BUILDING
SINGLE LINE DIAGRAM

Designed By: M.M.
Drawn By: B.W.
Checked By: J.M.
Reviewed By: SCS
Submitted By: Alan E. Hassett
Chief: Section

Scale:
Date: DEC. 1991
Spec. No.: DACW45-92-R-0020
Contract No.: DACW45-92-C-0101
Drawing Code: CER47-400E-503

ISE INTEGRATED SYSTEMS ENGINEERING
ENGINEERING CONSULTANTS
A PROFESSIONAL CORPORATION
807 OLD EAGLE SCHOOL ROAD – SUITE 208 WAYNE, PA 19087 (215) 671-1800
CAD FILE: ERMX5010\ERMX1003 PLOTTED:11/4/91_14:08

Environmental Resources Management, Inc.
Exton, Pennsylvania 19341 (215) 524-3500

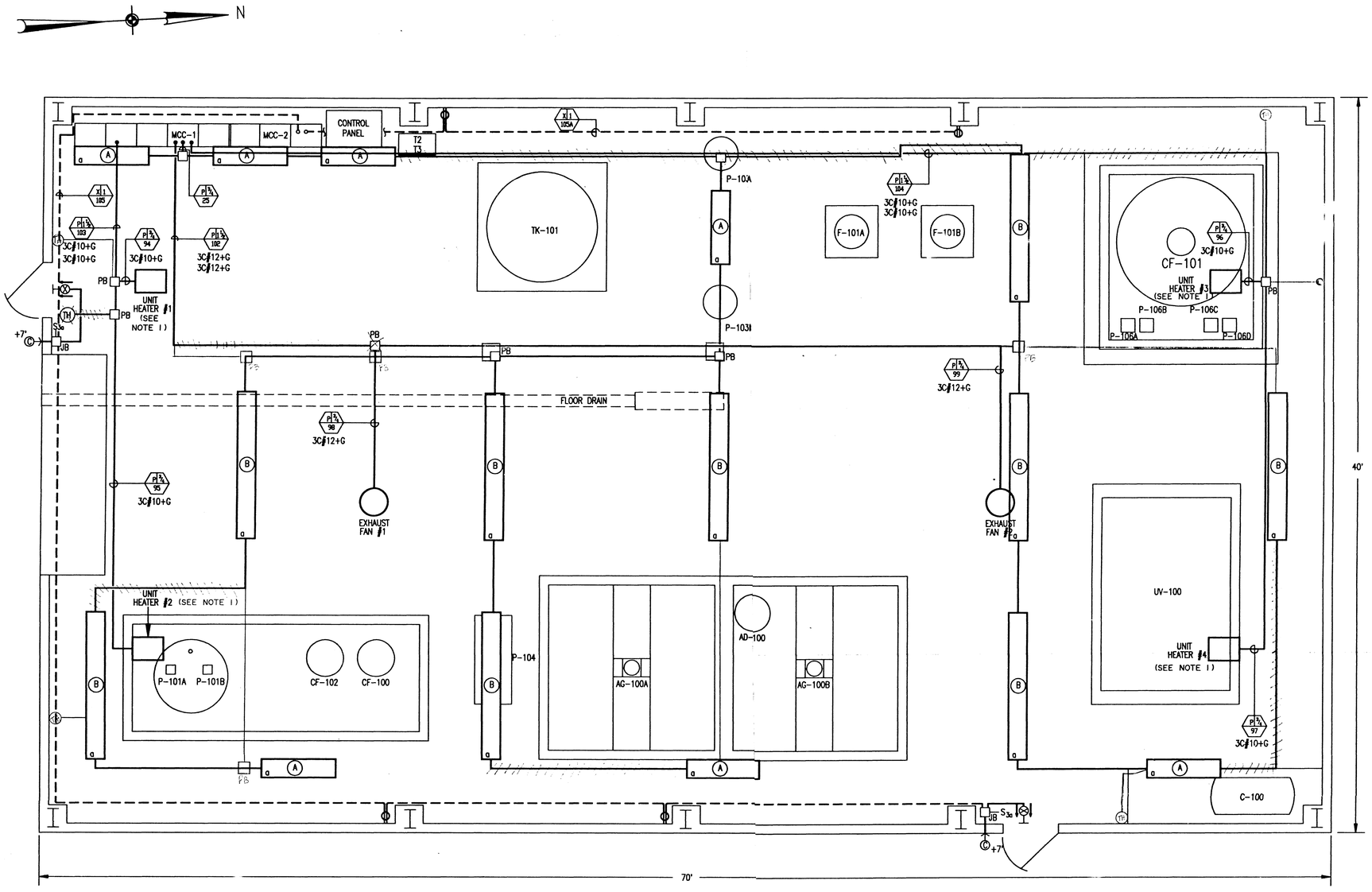

NOTE:

1. EACH UNIT HEATER SHALL BE 15 KW, HORIZONTAL DISCHARGE, MOUNTED APPROXIMATELY 10 FEET ABOVE FLOOR LEVEL.

DELETED

1' 0 1'

1 / 504 SCALE: 3/8" = 1'-0"

LEGEND

- (A) FLUORESCENT INDUSTRIAL LIGHTING FIXTURE SUITABLE FOR DAMP LOCATIONS, 2 LAMPS EACH 40W, 277V RATED, 4 FEET LONG, COE TYPE 232
- (B) FLUORESCENT INDUSTRIAL LIGHTING FIXTURE SUITABLE FOR DAMP LOCATIONS, 2 LAMPS EACH 75W, 277V RATED, 8 FEET LONG, COE TYPE 233
- (C) DOOR LIGHT, 175W, METAL HALIDE LAMP, COE TYPE 502E 120V RATED WITH PHOTO CELL CONTROL
- (X) EXIT LIGHT FIXTURE. ARROW INDICATES DIRECTION OF EXIT COE TYPE 604

COMMONWEALTH OF MASSACHUSETTS REGISTERED PROFESSIONAL ENGINEER MAHENDRA P. MISRA

Mahendra P. Misra 4/11/91

"TEMPORARY PERMIT MASSACHUSETTS 1991-99 PE."

COMMONWEALTH OF MASSACHUSETTS ALAN F. HASSETT CIVIL No. 35702 REGISTERED PROFESSIONAL ENGINEER

Alan F. Hassett

COMMONWEALTH OF MASSACHUSETTS JAMES D. FITZGERALD SWITCH No. 35664 REGISTERED PROFESSIONAL ENGINEER

ISE INTEGRATED SYSTEMS ENGINEERING — ENGINEERING CONSULTANTS, A PROFESSIONAL CORPORATION
987 OLD EAGLE SCHOOL ROAD - SUITE 205 WAYNE, PA 19087 (215) 971-1900
CAD FILE: ERMX5010\ERMX1004 PLOTTED: 11/1/91_12:46

Environmental Resources Management, Inc.
Exton, Pennsylvania 19341 (215) 524-3500
The ERM Group

$$ – THINK VALUE ENGINEERING – $$

Revisions

Symbol	Descriptions	Date	Approved

The ERM Group — ERM-New England, Inc. 205 Portland Street • Boston, Massachusetts

U.S. ARMY ENGINEER DISTRICT CORPS OF ENGINEERS OMAHA, NEBRASKA

Designed By: M.M.
Drawn By: B.W.
Checked By: J.M.
Reviewed By: SCS
Submitted By: Alan F. Hassett
Chief: Section

NEW BEDFORD HARBOR MASSACHUSETTS
SUPERFUND HAZARDOUS WASTE CLEANUP
HOT SPOT OPERABLE UNIT
TREATMENT BUILDING
LIGHTS & RECEPTACLES

Scale: 3/8" = 1'-0"
Date: DEC. 1991
Spec. No.: DACW45-92-R-0020
Contract No.: DACW45-92-C-0101
Drawing Code: CER47-400E-504

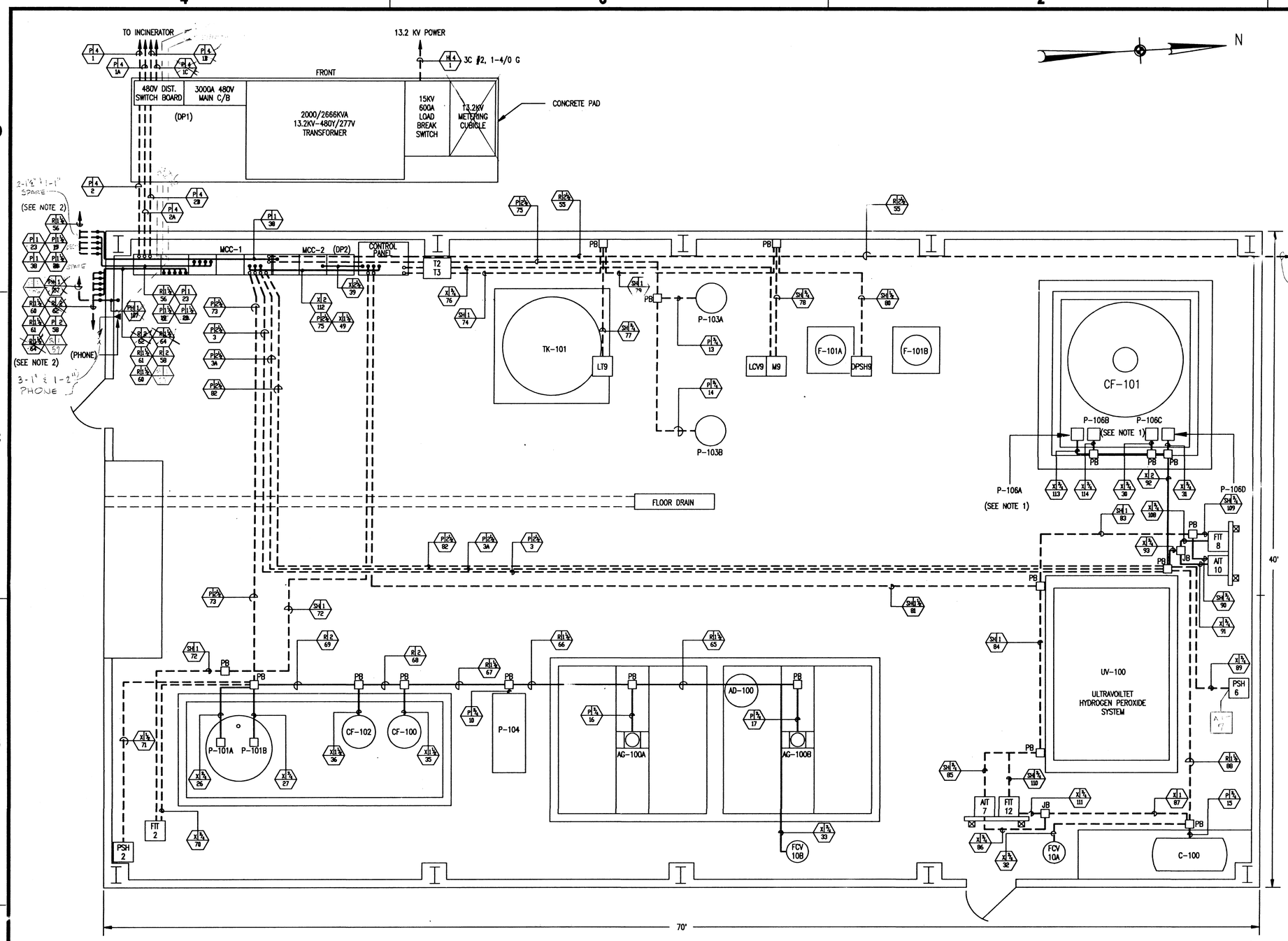

1' 0 1'

1 / 505 SCALE: 3/8" = 1'-0"

NOTE:

1. P-106A AND P-106B ARE WIRED FROM UV-100 CONTROL PANEL MOUNTED ON UV-100 SKID. EXACT LOCATION OF CONTROL PANEL TO BE DETERMINED IN THE FIELD.
2. SEE DWG #CER47-400E-501 FOR CONDUIT RUNS OUTSIDE TREATMENT BUILDING.

COMMONWEALTH OF PENNSYLVANIA REGISTERED PROFESSIONAL MAHENDRA P. MISRA ENGINEER No. 021654

Mahendra P. Misra 4/4/91

"TEMPORARY PERMIT MASSACHUSETTS 1991-99 PE."

COMMONWEALTH OF MASSACHUSETTS ALAN F. HASSETT CIVIL No. 35702 REGISTERED PROFESSIONAL ENGINEER

Alan F. Hassett

COMMONWEALTH OF MASSACHUSETTS JAMES D. FITZGERALD ENTIRE No. 33664 REGISTERED PROFESSIONAL ENGINEER

ISE INTEGRATED SYSTEMS ENGINEERING — ENGINEERING CONSULTANTS — A PROFESSIONAL CORPORATION — 867 OLD EAGLE SCHOOL ROAD - SUITE 205 WAYNE, PA 19087 (215) 971-1600 — CAD FILE: ERMX5010\ERMX1005 PLOTTED: 11/1/91_12:56

Environmental Resources Management, Inc. — Exton, Pennsylvania 19341 (215) 524-3500 — The ERM Group

$$ – THINK VALUE ENGINEERING – $$

Revisions

Symbol	Descriptions	Date	Approved

The ERM Group — ERM-New England, Inc. — 205 Portland Street • Boston, Massachusetts

U.S. ARMY ENGINEER DISTRICT CORPS OF ENGINEERS OMAHA, NEBRASKA

Designed By: M.M.
Drawn By: B.W.
Checked By: J.M.
Reviewed By: SCS
Submitted By: Chief: Section

NEW BEDFORD HARBOR — MASSACHUSETTS
SUPERFUND HAZARDOUS WASTE CLEANUP
HOT SPOT OPERABLE UNIT
TREATMENT BUILDING
CONDUIT PLAN

Scale: 3/8" = 1'0" — Date: DEC. 1991
Spec. No.: DACW45-92-R-0020
Contract No.: DACW45-92-C-0101
Drawing Code: CER47-400E-505

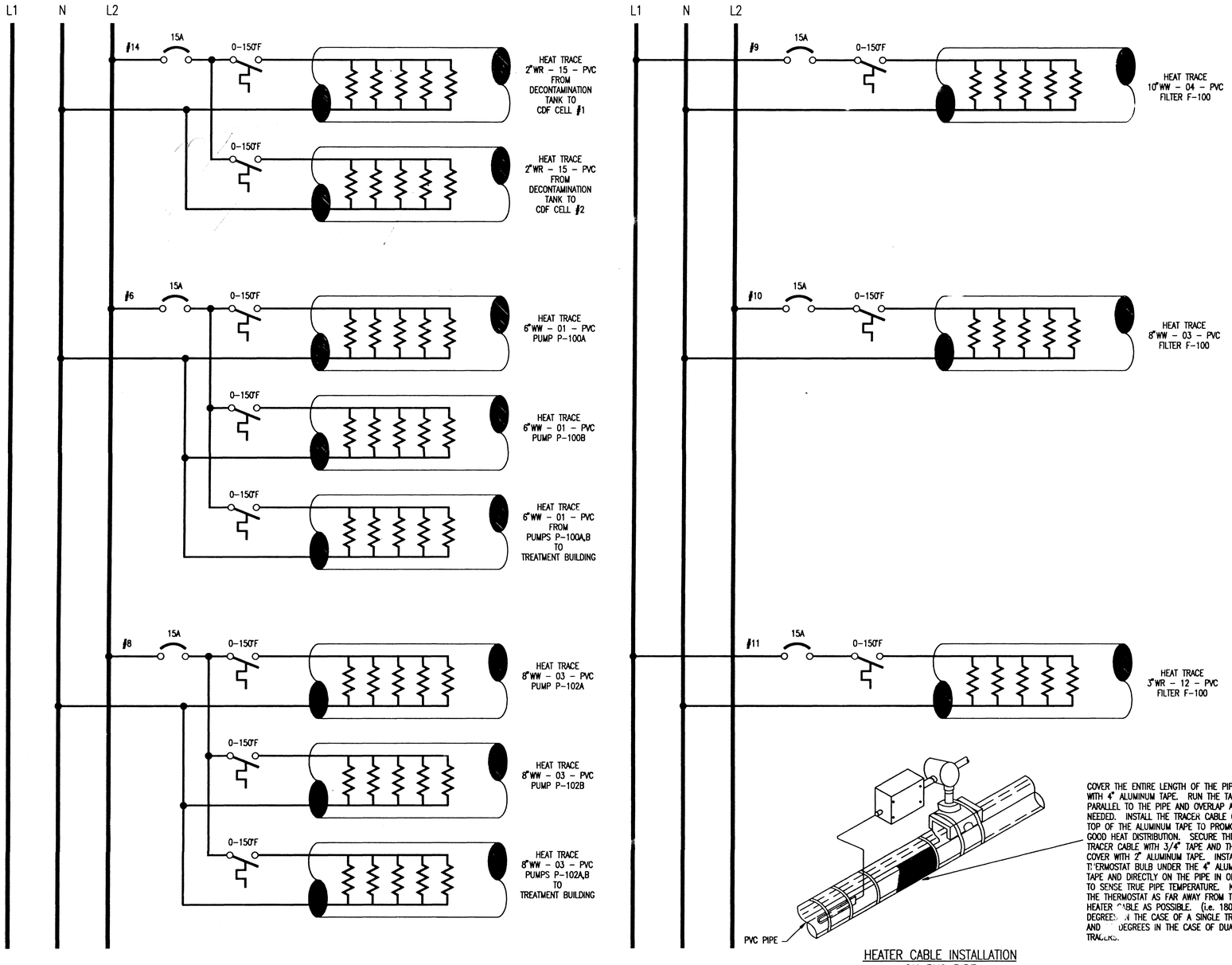

COVER THE ENTIRE LENGTH OF THE PIPE WITH 4" ALUMINUM TAPE. RUN THE TAPE PARALLEL TO THE PIPE AND OVERLAP AS NEEDED. INSTALL THE TRACER CABLE ON TOP OF THE ALUMINUM TAPE TO PROMOTE GOOD HEAT DISTRIBUTION. SECURE THE TRACER CABLE WITH 3/4" TAPE AND THEN COVER WITH 2" ALUMINUM TAPE. INSTALL THERMOSTAT BULB UNDER THE 4" ALUMINUM TAPE AND DIRECTLY ON THE PIPE IN ORDER TO SENSE TRUE PIPE TEMPERATURE. KEEP THE THERMOSTAT AS FAR AWAY FROM THE HEATER CABLE AS POSSIBLE. (i.e. 180 DEGREES IN THE CASE OF A SINGLE TRACER AND [illegible] DEGREES IN THE CASE OF DUAL TRACERS.

HEATER CABLE INSTALLATION
ON PVC PIPE
NOT TO SCALE

NOTES:
1. FOR PIPES TO BE HEAT TRACED, REFER TO PIPING AND INSTRUMENT DIAGRAMS CER47-400E-111 & 112

COMMONWEALTH OF PENNSYLVANIA REGISTERED PROFESSIONAL MAHENDRA P. MISRA ENGINEER No. 021454

Mahendra P. Misra 11/11/91
"TEMPORARY PERMIT MASSACHUSETTS 1991-99 PE."

COMMONWEALTH OF MASSACHUSETTS ALAN F. HASSETT CIVIL No. 35702 REGISTERED PROFESSIONAL ENGINEER

Alan F. Hassett

COMMONWEALTH OF MASSACHUSETTS JAMES D. FITZGERALD SANITARY No. 35664 REGISTERED PROFESSIONAL ENGINEER

ISE INTEGRATED SYSTEMS ENGINEERING — ENGINEERING CONSULTANTS, A PROFESSIONAL CORPORATION
997 OLD EAGLE SCHOOL ROAD - SUITE 205 WAYNE, PA 19087 (215) 971-1800
CAD FILE: ERMX5010\ERMX1006 PLOTTED: 11/4/91_14:29

Environmental Resources Management, Inc.
Exton, Pennsylvania 19341 (215) 524-3500
The ERM Group

$$ - THINK VALUE ENGINEERING - $$

Revisions			
Symbol	Descriptions	Date	Approved

The ERM Group — ERM-New England, Inc.
205 Portland Street • Boston, Massachusetts

U.S. ARMY ENGINEER DISTRICT
CORPS OF ENGINEERS
OMAHA, NEBRASKA

Designed By: M.M.
Drawn By: W.C.N.
Checked By: J.M.
Reviewed By: SCS
Submitted By: Alan F. Hassett
Chief: Section

NEW BEDFORD HARBOR MASSACHUSETTS
SUPERFUND HAZARDOUS WASTE CLEANUP
HOT SPOT OPERABLE UNIT
TREATMENT BUILDING
HEAT TRACE SCHEMATICS

Scale:
Date: DEC. 1991
Spec. No.: DACW45-92-R-0020
Contract No.: DACW45-92-C-0101
Drawing Code: CER47-400E-506

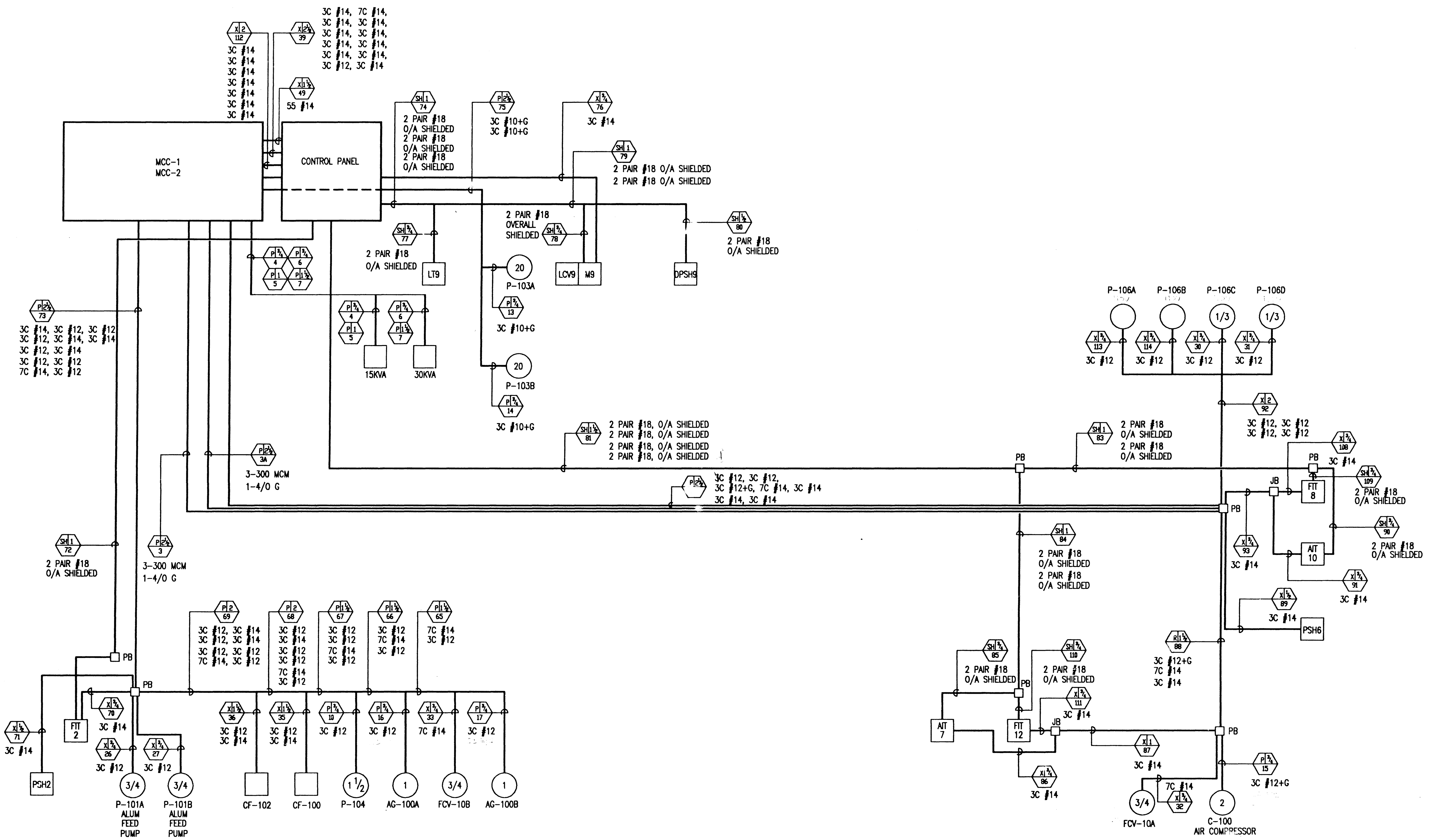

PHONE INTERCONNECT DIAGRAM

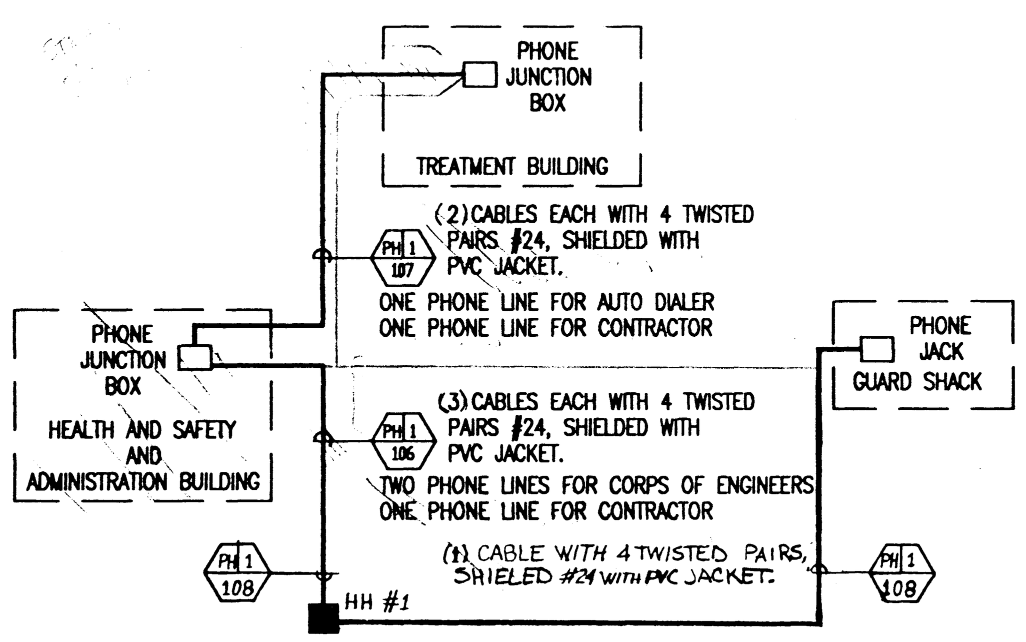

NOTE:

1. CONDUIT NUMBERS 28 AND 29 NOT USED. LAST NUMBER USED 114.
2. MOTORS P-106A AND P-106B WILL BE WIRED FROM CONTROL PANEL TO BE PROVIDED WITH UV-100.

COMMONWEALTH OF PENNSYLVANIA REGISTERED PROFESSIONAL MAHENDRA P. MISRA ENGINEER No 021455-E

Mahendra P. Misra 4/11/91

"TEMPORARY PERMIT MASSACHUSETTS 1991-99 PE."

COMMONWEALTH OF MASSACHUSETTS ALAN F. HASSETT CIVIL No. 36702 REGISTERED PROFESSIONAL ENGINEER

Alan F Hassett

COMMONWEALTH OF MASSACHUSETTS JAMES FITZGERALD SANITARY No. 38884 REGISTERED PROFESSIONAL ENGINEER

ISE INTEGRATED SYSTEMS ENGINEERING — ENGINEERING CONSULTANTS, A PROFESSIONAL CORPORATION
987 OLD EAGLE SCHOOL ROAD - SUITE 708 WAYNE, PA 19087 (215) 971-1800
CAD FILE: ERMX5010\ERMX1007 PLOTTED: 11/4/91_14:55

Environmental Resources Management, Inc.
Exton, Pennsylvania 19341 (215) 524-3500

SAFETY PAYS

$$ - THINK VALUE ENGINEERING - $$

Revisions			
Symbol	Descriptions	Date	Approved

The ERM Group — ERM-New England, inc.
205 Portland Street • Boston, Massachusetts

U.S. ARMY ENGINEER DISTRICT
CORPS OF ENGINEERS
OMAHA, NEBRASKA

Designed By: M.M.	NEW BEDFORD HARBOR MASSACHUSETTS SUPERFUND HAZARDOUS WASTE CLEANUP **HOT SPOT OPERABLE UNIT** TREATMENT BUILDING INSIDE INTERCONNECTION DIAGRAM
Drawn By: B.W	
Checked By: J.M	
Reviewed By: SCS	Scale: / Date: DEC. 1991
Submitted By: Alan F Hassett Chief: Section	Spec. No.: DACW45-92-R-0020 Contract No.: DACW45-92-C-0101 Drawing Code: CER47-400E-507

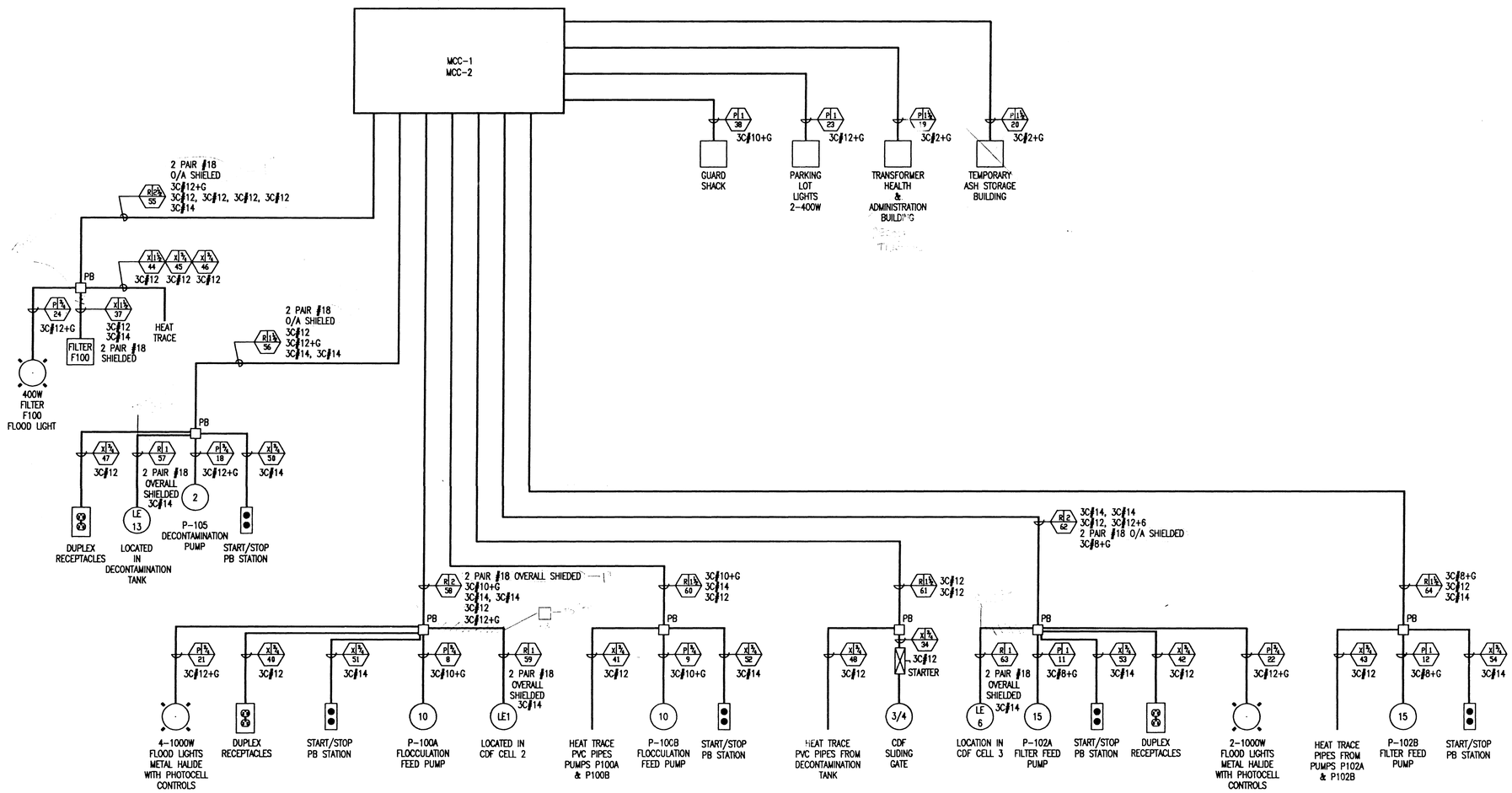

NOTES:

(1) LOCATE START/STOP STATIONS, PULL BOXES AND RECEPTACLES ON PUMP STANDS.

(2) FOR PIPES TO BE HEAT TRACED REFER TO PIPING AND INSTRUMENTATION DRAWINGS CER47-400E-111 & 112

(3) FOR HEAT TRACE SCHEMATICS REFER TO DWG #CER47-400E-506

COMMONWEALTH OF PENNSYLVANIA REGISTERED PROFESSIONAL MAHENDRA P. MISRA ENGINEER No. 021654

Mahendra P. Misra 4/4/91

"TEMPORARY PERMIT MASSACHUSETTS 1991-99 PE."

COMMONWEALTH OF MASSACHUSETTS ALAN F. HASSETT CIVIL No. 35702 REGISTERED PROFESSIONAL ENGINEER

Al F Hassett

COMMONWEALTH OF MASSACHUSETTS JAMIE FITZGERALD SANITARY No. 35664 REGISTERED PROFESSIONAL ENGINEER

ISE INTEGRATED SYSTEMS ENGINEERING — ENGINEERING CONSULTANTS, A PROFESSIONAL CORPORATION, 997 OLD EAGLE SCHOOL ROAD – SUITE 205, WAYNE, PA 19087 (215) 971-1900

CAD FILE: ERMX5010\ERMX1008 PLOTTED: 11/1/91_13:22

Environmental Resources Management, Inc. — The ERM Group

Exton, Pennsylvania 19341 (215) 524-3500

$$ – THINK VALUE ENGINEERING – $$

Revisions			
Symbol	Descriptions	Date	Approved

The ERM Group — ERM-New England, Inc. 205 Portland Street • Boston, Massachusetts

U.S. ARMY ENGINEER DISTRICT CORPS OF ENGINEERS OMAHA, NEBRASKA

NEW BEDFORD HARBOR MASSACHUSETTS

SUPERFUND HAZARDOUS WASTE CLEANUP

HOT SPOT OPERABLE UNIT

TREATMENT BUILDING

OUTSIDE INTERCONNECTION DIAGRAM

Designed By: M.M	
Drawn By: B.W.	
Checked By: J.M.	
Reviewed By: SCS	Scale:
Submitted By: Al F Hassett	Spec. No.: DACW45-92-R-0020
Chief: Section	Contract No.: DACW45-92-C-0101
Date: DEC. 1991	Drawing Code: CER47-400E-508

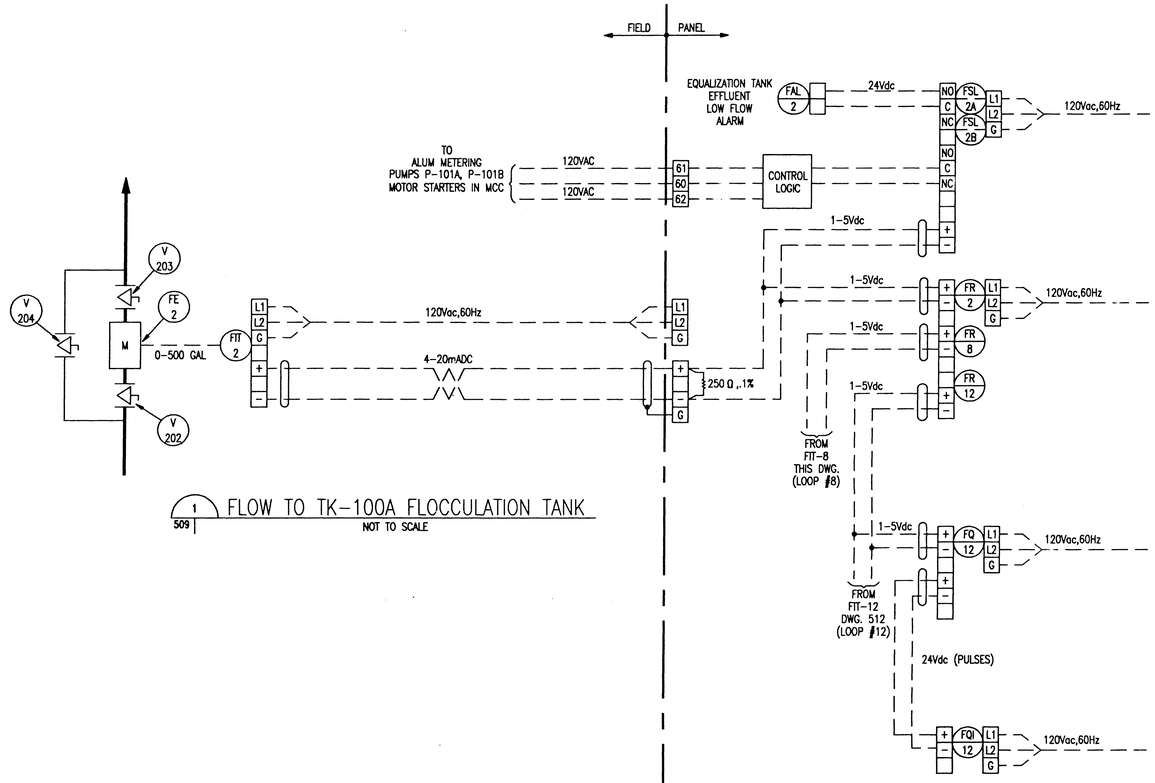

1 509 FLOW TO TK-100A FLOCCULATION TANK

NOT TO SCALE

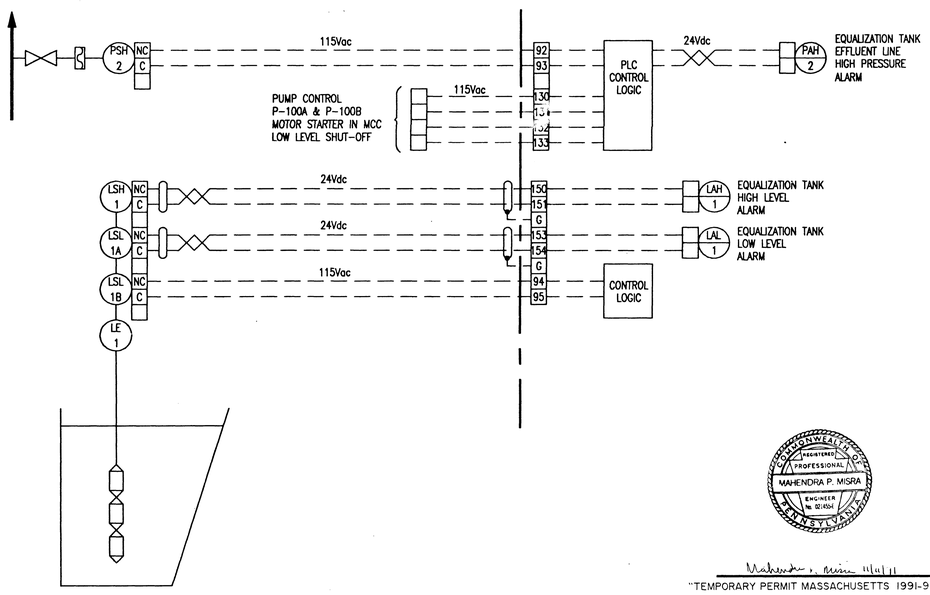

2 509 CDF-101 EQUALIZATION TANK

NOT TO SCALE

Note

REFERENCE TRANSMITTAL NO'S 16910-002-A AND 16910-003-A FOR AS-BUILTS AND LOGIC.

COMMONWEALTH OF PENNSYLVANIA REGISTERED PROFESSIONAL MAHENDRA P. MISRA ENGINEER No. 021604

Mahendra P. Misra 11/4/91

"TEMPORARY PERMIT MASSACHUSETTS 1991-99 PE."

COMMONWEALTH OF MASSACHUSETTS ALAN F. HASSETT CIVIL No. 30702 REGISTERED PROFESSIONAL ENGINEER

Alan F. Hassett

ISE INTEGRATED SYSTEMS ENGINEERING CONSULTANTS A PROFESSIONAL CORPORATION 867 OLD EAGLE SCHOOL ROAD – SUITE 305 WAYNE, PA 19087 (215) 971-1900
CAD FILE: ERMX5010\ERMX1009 PLOTTED: 11/4/91_15:12

Environmental Resources Management, Inc.
Exton, Pennsylvania 19341 (215) 524-3500

The ERM Group

$$ – THINK VALUE ENGINEERING – $$

Revisions			
Symbol	Descriptions	Date	Approved

The ERM Group — ERM-New England, Inc. 205 Portland Street • Boston, Massachusetts

U.S. ARMY ENGINEER DISTRICT CORPS OF ENGINEERS OMAHA, NEBRASKA

Designed By: F.P.D.
Drawn By: B.W.
Checked By: R.B.
Reviewed By: SCS
Submitted By: Alan F. Hassett
Chief: Section

NEW BEDFORD HARBOR MASSACHUSETTS
SUPERFUND HAZARDOUS WASTE CLEANUP
HOT SPOT OPERABLE UNIT
TREATMENT BUILDING
LOOP DIAGRAM No.1

Scale:
Date: DEC. 1991
Spec. No.: DACW45-92-R-0020
Contract No.: DACW45-92-C-0101
Drawing Code: CER47-400E-509

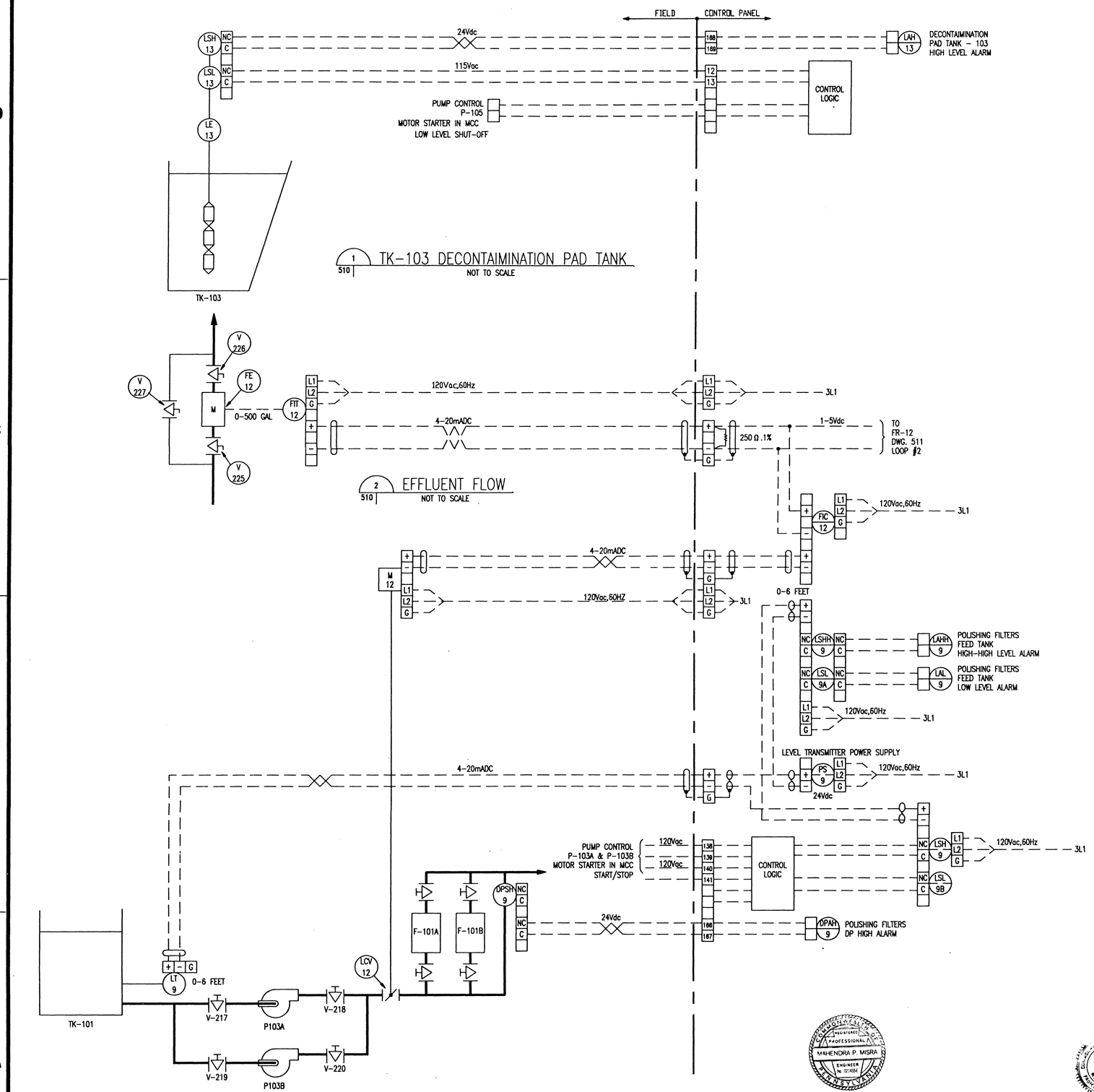

N

REFERENCE TRANSMITTAL NO'S 16910-002-A AND 16910-003-A FOR AS-BUILTS AND LOGIC.

MAHENDRA P. MISRA
REGISTERED PROFESSIONAL ENGINEER
No. 021654
COMMONWEALTH OF PENNSYLVANIA

Mahendra P. Misra 11/11/91
"TEMPORARY PERMIT MASSACHUSETTS 1991-99 PE."

ALAN F. HASSETT
CIVIL
No. 36702
REGISTERED PROFESSIONAL ENGINEER
COMMONWEALTH OF MASSACHUSETTS

Alan F. Hassett

JAMES D. FITZGERALD
SANITARY
No. 26654
REGISTERED PROFESSIONAL ENGINEER
COMMONWEALTH OF MASSACHUSETTS

SAFETY DAYS

ISE INTEGRATED SYSTEMS ENGINEERING
ENGINEERING CONSULTANTS
A PROFESSIONALS CORPORATION
987 OLD EAGLE SCHOOL ROAD - SUITE 205 WAYNE, PA 19087 (215) 971-1800
CAD FILE: ERMX5010\ERMX1010 PLOTTED: 8/16/91_13:03

Environmental Resources Management, Inc.
Exton, Pennsylvania 19341 (215) 524-3500
The ERM Group

$$ - THINK VALUE ENGINEERING - $$

Revisions

Symbol	Descriptions	Date	Approved

The ERM Group
ERM-New England, Inc.
205 Portland Street • Boston, Massachusetts

U.S. ARMY ENGINEER DISTRICT
CORPS OF ENGINEERS
OMAHA, NEBRASKA

Designed By: F.P.D.
Drawn By: B.W.
Checked By: R.B.
Reviewed By: SCS
Submitted By: Alan F. Hassett
Chief: Section

NEW BEDFORD HARBOR MASSACHUSETTS
SUPERFUND HAZARDOUS WASTE CLEANUP
HOT SPOT OPERABLE UNIT
TREATMENT BUILDING
LOOP DIAGRAM No.2

Scale:
Date: DEC. 1991
Spec. No.: DACW45-92-R-0020
Contract No.: DACW45-92-C-0101
Drawing Code: CER47-400E-510

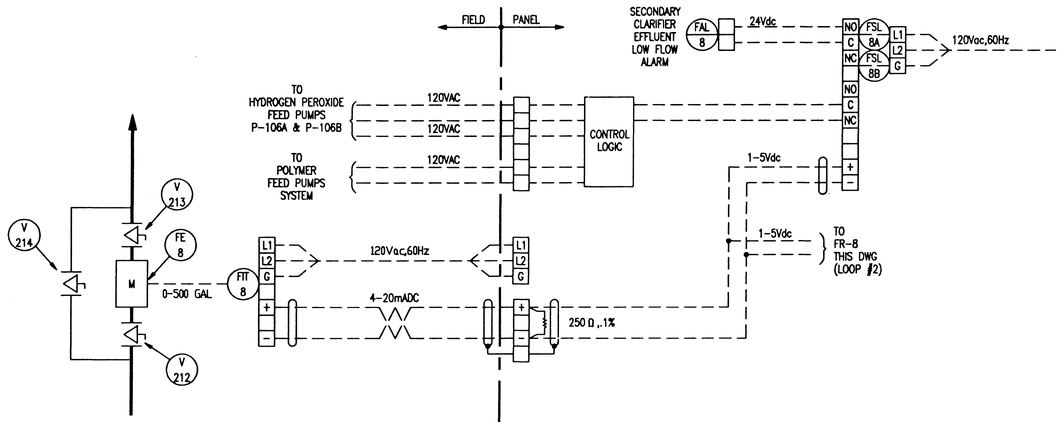

1 / 511 SECONDARY CLARIFIER DISCHARGE FLOW

NOT TO SCALE

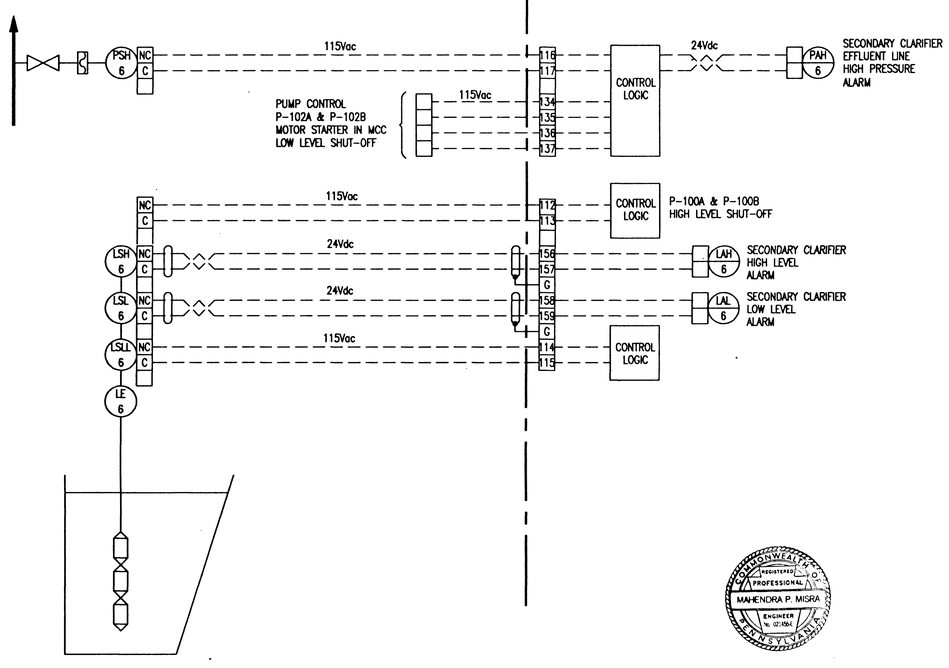

2 / 511 CDF-102 SECONDARY CLARIFIER

NOT TO SCALE

REFERENCE TRANSMITTAL NO'S 16910-002-A AND 16910-003-A FOR AS-BUILTS AND LOGIC.

COMMONWEALTH OF PENNSYLVANIA REGISTERED PROFESSIONAL ENGINEER MAHENDRA P. MISRA ENGINEER No. 021664

Mahendra P. Misra 11/11/91

"TEMPORARY PERMIT MASSACHUSETTS 1991-99 PE."

COMMONWEALTH OF MASSACHUSETTS ALAN F. HASSETT CIVIL No. 35702 REGISTERED PROFESSIONAL ENGINEER

Alan F. Hassett

COMMONWEALTH OF MASSACHUSETTS JAMES D. FITZGERALD SANITARY No. 30664 REGISTERED PROFESSIONAL ENGINEER

SAFETY DAYS

ISE INTEGRATED SYSTEMS ENGINEERING — ENGINEERING CONSULTANTS, A PROFESSIONAL CORPORATION
997 OLD EAGLE SCHOOL ROAD - SUITE 205 WAYNE, PA 19087 (215) 971-1900
CAD FILE: ERMX5010\ERMX1011 PLOTTED: 11/4/91_15:13

Environmental Resources Management, Inc.
Exton, Pennsylvania 19341 (215) 524-3500
The ERM Group

$$ – THINK VALUE ENGINEERING – $$

Revisions

Symbol	Descriptions	Date	Approved

The ERM Group — ERM-New England, Inc. 205 Portland Street • Boston, Massachusetts

U.S. ARMY ENGINEER DISTRICT
CORPS OF ENGINEERS
OMAHA, NEBRASKA

Designed By: F.P.D.
Drawn By: L.E.B.
Checked By: R.B.
Reviewed By: SCS
Submitted By: Alan F. Hassett
Chief: Section

NEW BEDFORD HARBOR — MASSACHUSETTS
SUPERFUND HAZARDOUS WASTE CLEANUP
HOT SPOT OPERABLE UNIT
TREATMENT BUILDING
LOOP DIAGRAM No. 3

Scale:
Date: DEC. 1991
Spec. No.: DACW45-92-R-0020
Contract No.: DACW45-92-C-0101
Drawing Code: CER47-400E-511

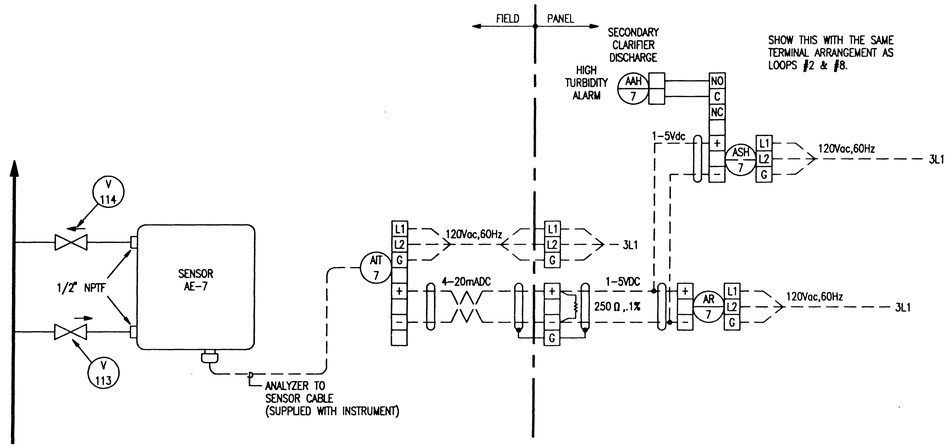

1 / 512 SECONDARY CLARIFIER DISCHARGE TURBIDITY

NOT TO SCALE

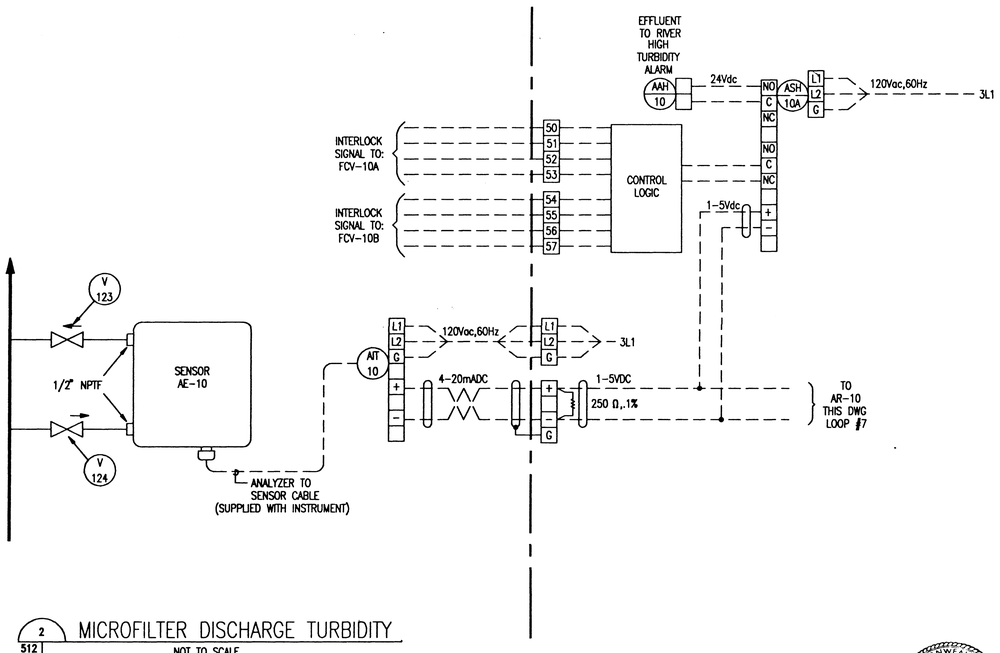

2 / 512 MICROFILTER DISCHARGE TURBIDITY

NOT TO SCALE

REFERENCE TRANSMITTAL NO'S 16910-002-A AND 16910-003-A FOR AS-BUILTS AND LOGIC.

COMMONWEALTH OF PENNSYLVANIA REGISTERED PROFESSIONAL ENGINEER MAHENDRA P. MISRA

Mahendra P. Misra 11/4/91

TEMPORARY PERMIT MASSACHUSETTS 1991-99 PE.

COMMONWEALTH OF MASSACHUSETTS ALAN F. HASSETT CIVIL No. 35703 REGISTERED PROFESSIONAL ENGINEER

Alan F. Hassett

COMMONWEALTH OF MASSACHUSETTS JAMES D. FITZGERALD SANITARY No. 35664 REGISTERED PROFESSIONAL ENGINEER

ISE INTEGRATED SYSTEMS ENGINEERING — ENGINEERING CONSULTANTS — A PROFESSIONAL CORPORATION — 997 OLD EAGLE SCHOOL ROAD – SUITE 205 WAYNE, PA 19087 (215) 971-1900

CAD FILE: ERMX5010\ERMX1012 PLOTTED: 11/4/91_15:14

Environmental Resources Management, Inc. — The ERM Group — Exton, Pennsylvania 19341 (215) 524-3500

SAFETY FIRST

$$ – THINK VALUE ENGINEERING – $$

Revisions

Symbol	Descriptions	Date	Approved

The ERM Group — ERM-New England, Inc. — 205 Portland Street • Boston, Massachusetts

U.S. ARMY ENGINEER DISTRICT CORPS OF ENGINEERS OMAHA, NEBRASKA

Designed By: F.P.D.
Drawn By: L.E.B.
Checked By: R.B.
Reviewed By: SCS
Submitted By: Alan F. Hassett
Chief: Section

NEW BEDFORD HARBOR MASSACHUSETTS
SUPERFUND HAZARDOUS WASTE CLEANUP
HOT SPOT OPERABLE UNIT
TREATMENT BUILDING
LOOP DIAGRAM No. 4

Scale:
Date: DEC. 1991
Spec. No.: DACW45-92-R-0020
Contract No.: DACW45-92-C-0101
Drawing Code: **CER47-400E-512**

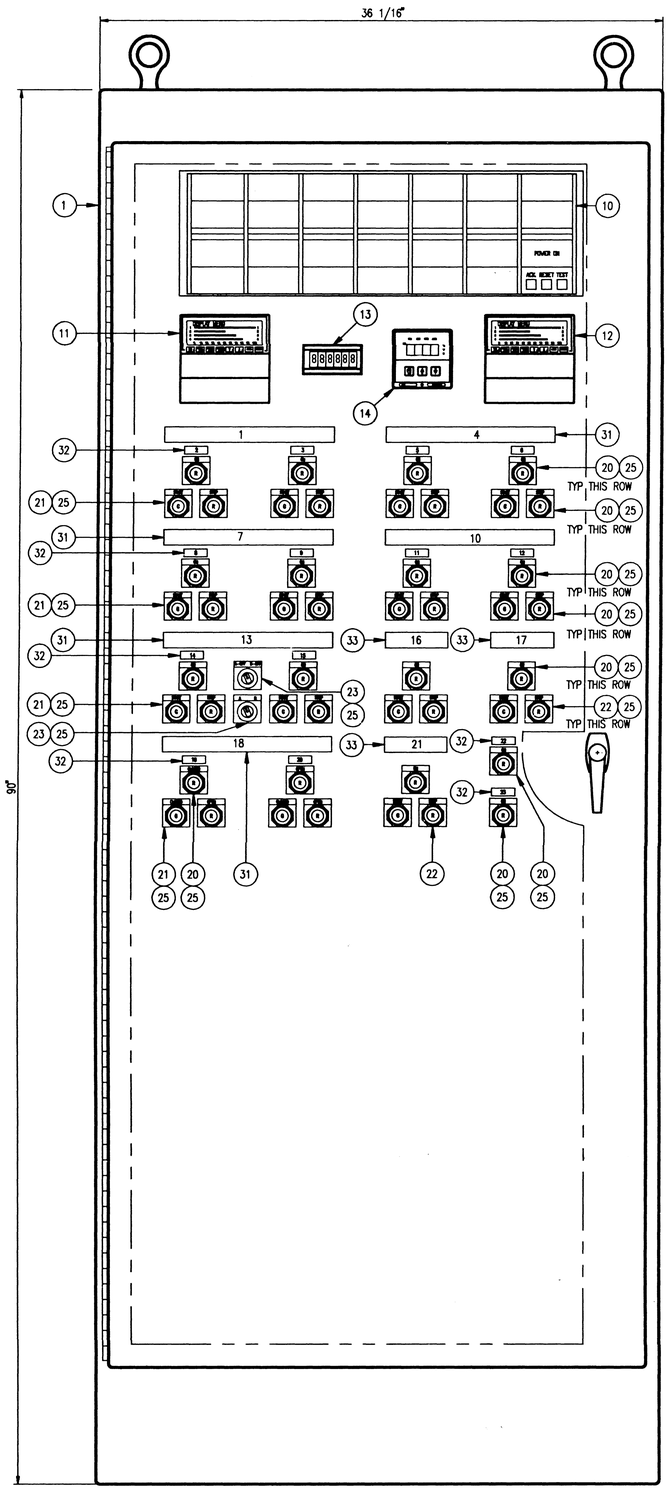

1 / 513 INSTRUMENT PANEL LAYOUT

SCALE: 1/4"=1"

NAMEPLATE LEGEND

NO.	ENGRAVING
1	FLOCCULATION FEED
2	PUMP 100A
3	PUMP 100B
4	POLISHING FILTER FEED
5	PUMP 103A
6	PUMP 103B
7	FILTER FEED
8	PUMP 102A
9	PUMP 102B
10	FLOCCULATION TANK
11	PUMP AG-100A
12	PUMP AG-100B
13	ALUM FEED
14	PUMP 101A
15	PUMP 101B
16	TRANSFER PUMP
17	AIR COMPRESSOR
18	EFFLUENT FLOW CONTROL
19	VALVE-FCV-10A
20	VALVE-FCV-10B
21	DECONTAMINATION PAD
22	POLYMER FEED CF-100
23	POLYMER FEED CF-102

NOTE:

1) INSTRUMENT PANEL TO BE 90" HIGH BY 36 1/16" WIDE BY 24 1/16" DEEP, WITH 32" WIDE BY 70" LONG SUBPANEL.

2) FOR EQUIPMENT DESCRIPTION SEE BILL OF MATERIAL DWG. CER47-400E-521

REFERENCE TRANSMITTAL NO'S 16910-002-A AND 16910-003-A FOR AS-BUILTS AND LOGIC.

COMMONWEALTH OF PENNSYLVANIA REGISTERED PROFESSIONAL MAHENDRA P. MISRA ENGINEER No. 02-4554

Mahendra P. Misra 11/4/91

"TEMPORARY PERMIT MASSACHUSETTS 1991-99 PE."

STATE OF MASSACHUSETTS ALAN E. FASSETT CIVIL No. 35702 REGISTERED PROFESSIONAL ENGINEER

Alan E. Hassett

COMMONWEALTH OF MASSACHUSETTS JAMES D. FITZGERALD SANITARY No. 35684 REGISTERED PROFESSIONAL ENGINEER

SAFETY BANK

ISE INTEGRATED SYSTEMS ENGINEERING — ENGINEERING CONSULTANTS, A PROFESSIONAL CORPORATION
907 OLD EAGLE SCHOOL ROAD – SUITE 206 WAYNE, PA 19087 (215) 971-1900
CAD FILE: ERMX5010\ERMX1013 PLOTTED: 11/4/91_14:29

Environmental Resources Management, Inc.
Exton, Pennsylvania 19341 (215) 524-3500

The ERM Group

$$ – THINK VALUE ENGINEERING – $$

Revisions

Symbol	Descriptions	Date	Approved

The ERM Group — ERM-New England, Inc.
205 Portland Street • Boston, Massachusetts

U.S. ARMY ENGINEER DISTRICT
CORPS OF ENGINEERS
OMAHA, NEBRASKA

Designed By: F.P.D.
Drawn By: B.W.
Checked By: R.B.
Reviewed By: SCS
Submitted By: Alan E. Hassett
Chief: Section

NEW BEDFORD HARBOR MASSACHUSETTS
SUPERFUND HAZARDOUS WASTE CLEANUP
HOT SPOT OPERABLE UNIT
TREATMENT BUILDING
INSTRUMENT PANEL LAYOUT

Scale:
Date: DEC. 1991
Spec. No.: DACW45-92-R-0020
Contract No.: DACW45-92-C-0101
Drawing Code: **CER47-400E-513**

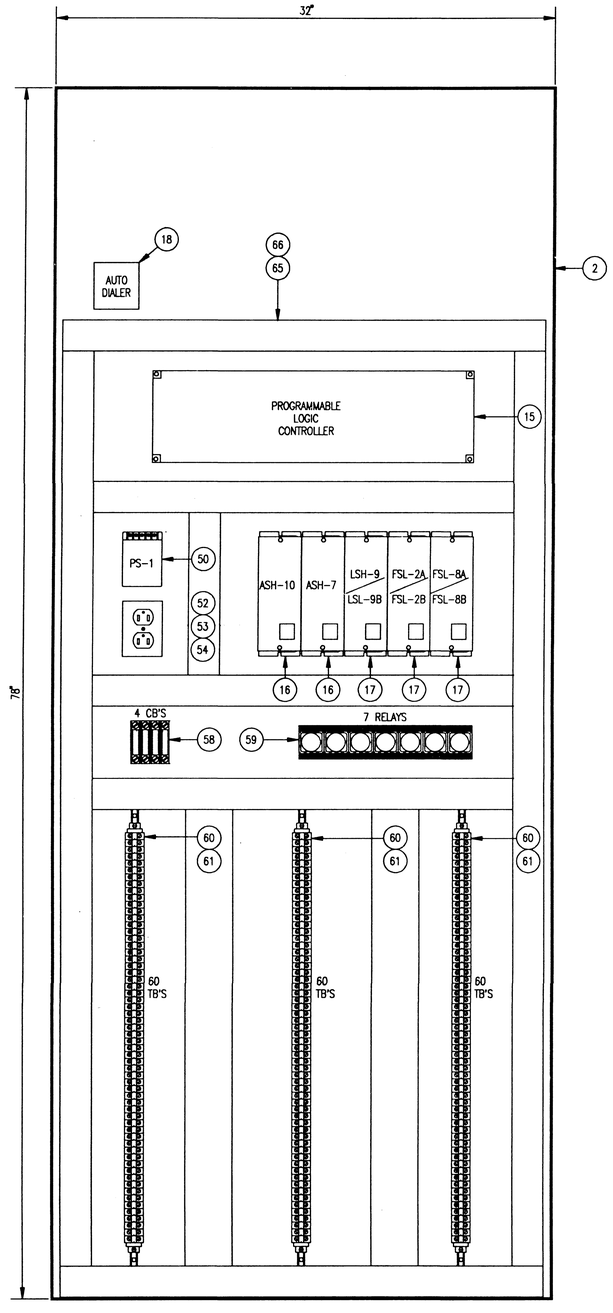

1 / 514 INSTRUMENT SUBPANEL
SCALE: 1/4"=1"

NOTE:

1) FOR EQUIPMENT DESCRIPTION SEE BILL OF MATERIAL DWG. CER47-400E-521

REFERENCE TRANSMITTAL NO'S 16910-002-A AND 16910-003-A FOR AS-BUILTS AND LOGIC.

COMMONWEALTH OF PENNSYLVANIA REGISTERED PROFESSIONAL MAHENDRA P. MISRA ENGINEER No. 024354

Mahendra P. Misra 11/4/91
"TEMPORARY PERMIT MASSACHUSETTS 1991-99 PE."

ALAN F. HASSETT CIVIL No. 35702 REGISTERED PROFESSIONAL ENGINEER

Alan F. Hassett

COMMONWEALTH OF MASSACHUSETTS JAMES D. FITZGERALD SANITARY No. 35654 REGISTERED PROFESSIONAL ENGINEER

ISE INTEGRATED SYSTEMS ENGINEERING — ENGINEERING CONSULTANTS — A PROFESSIONAL CORPORATION
997 OLD EAGLE SCHOOL ROAD – SUITE 205 WAYNE, PA 19087 (215) 971-1900
CAD FILE: ERMX5010\ERMX1014 PLOTTED: 11/4/91_14:41

Environmental Resources Management, Inc.
Exton, Pennsylvania 19341 (215) 524-3500
The ERM Group

$$ – THINK VALUE ENGINEERING – $$

Revisions

Symbol	Descriptions	Date	Approved

The ERM Group — ERM-New England, inc.
205 Portland Street • Boston, Massachusetts

U.S. ARMY ENGINEER DISTRICT
CORPS OF ENGINEERS
OMAHA, NEBRASKA

NEW BEDFORD HARBOR MASSACHUSETTS
SUPERFUND HAZARDOUS WASTE CLEANUP
HOT SPOT OPERABLE UNIT
TREATMENT BUILDING
INSTRUMENT SUBPANEL LAYOUT

Designed By: F.D.
Drawn By: L.E.B
Checked By: R.B.
Reviewed By: SCS
Submitted By: Alan F. Hassett
Chief: Section

Scale:
Date: DEC. 1991
Spec. No.: DACW45-92-R-0020
Contract No.: DACW45-92-C-0101
Drawing Code: CER47-400E-514

EQUALIZATION TANK HIGH LEVEL	EQUALIZATION TANK EFFLUENT LINE HIGH PRESSURE	SECONDARY CLARIFIER HIGH LEVEL	SECONDARY CLARIFIER EFFLUENT LINE HIGH PRESSURE	POLISHING FILTERS TANK HIGH-HIGH LEVEL	POLISHING FILTERS DP HIGH	DECONTAMINATION PAD TANK HIGH-HIGH LEVEL
EQUALIZATION TANK LOW LEVEL		SECONDARY CLARIFIER LOW LEVEL		POLISHING FILTERS TANK LOW LEVEL		
	EQUALIZATION TANK EFFLUENT FLOW LOW		SECONDARY CLARIFIER EFFLUENT FLOW LOW	POLISHING FILTERS EFFLUENT TURBIDITY HIGH	HORN	POWER ON
				SECONDARY CLARIFIER EFFLUENT TURBIDITY HIGH		ACK. RESET TEST

1 / 515 ANNUNICATOR WINDOW ENGRAVING
SCALE 1" = 1"

REFERENCE TRANSMITTAL NO'S 16910-002-A AND 16910-003-A FOR AS-BUILTS AND LOGIC.

COMMONWEALTH OF PENNSYLVANIA REGISTERED PROFESSIONAL MAHENDRA P. MISRA ENGINEER No. 021454

Mahendra P. Misra 11/11/91
"TEMPORARY PERMIT MASSACHUSETTS 1991-99 PE."

ALAN F. HASSETT CIVIL No. 35702 REGISTERED PROFESSIONAL ENGINEER

Al F Hassett

COMMONWEALTH OF MASSACHUSETTS JAMES D. FITZGERALD SIGNATURE No. 35584 REGISTERED PROFESSIONAL ENGINEER

SAFETY DAYS

ISE INTEGRATED SYSTEMS ENGINEERING — ENGINEERING CONSULTANTS, A PROFESSIONAL CORPORATION
997 OLD EAGLE SCHOOL ROAD – SUITE 205 WAYNE, PA 19087 (215) 971-1900
CAD FILE: ERMX5010\ERMX1015 PLOTTED: 8/16/91_13:25

Environmental Resources Management, Inc.
Exton, Pennsylvania 19341 (215) 524-3500
The ERM Group

$$ – THINK VALUE ENGINEERING – $$

Revisions

Symbol	Descriptions	Date	Approved

The ERM Group — ERM-New England, inc.
205 Portland Street • Boston, Massachusetts

U.S. ARMY ENGINEER DISTRICT
CORPS OF ENGINEERS
OMAHA, NEBRASKA

Designed By: F.P.D.
Drawn By: L.E.B.
Checked By: R.B.
Reviewed By: SCS
Submitted By: Al F Hassett
Chief: Section

NEW BEDFORD HARBOR MASSACHUSETTS
SUPERFUND HAZARDOUS WASTE CLEANUP
HOT SPOT OPERABLE UNIT
TREATMENT BUILDING
ANNUNICATOR WINDOW DETAIL

Scale:
Date: DEC. 1991
Spec. No.: DACW45-92-R-0020
Contract No.: DACW45-92-C-0101
Drawing Code: CER47-400E-515

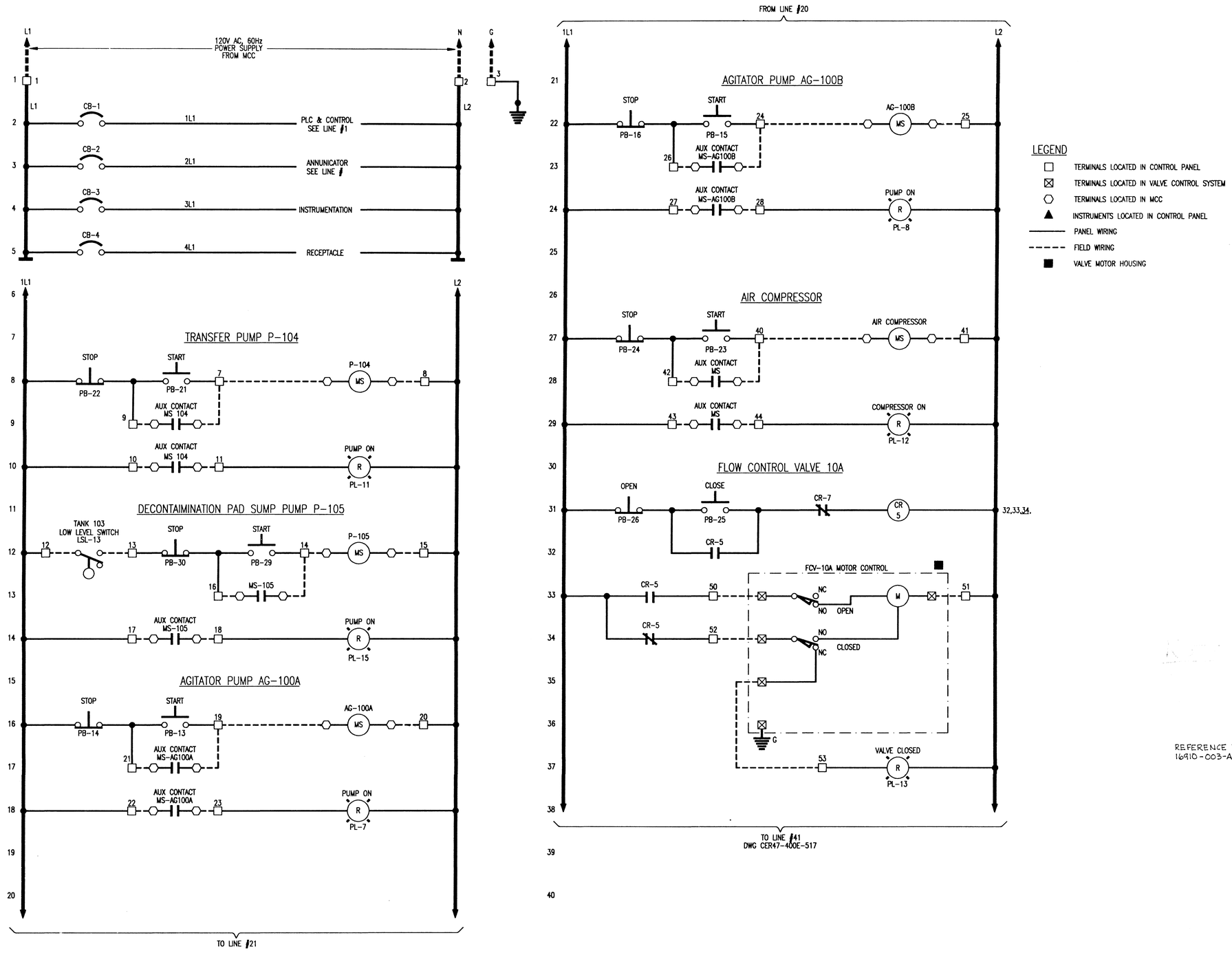

LEGEND

- □ TERMINALS LOCATED IN CONTROL PANEL
- ⊠ TERMINALS LOCATED IN VALVE CONTROL SYSTEM
- ⬡ TERMINALS LOCATED IN MCC
- ▲ INSTRUMENTS LOCATED IN CONTROL PANEL
- ——— PANEL WIRING
- - - - - FIELD WIRING
- ■ VALVE MOTOR HOUSING

REFERENCE TRANSMITTAL NO'S 16910-002-A AND 16910-003-A FOR AS-BUILTS AND LOGIC.

Mahendra P. Misra 11/11/91
"TEMPORARY PERMIT MASSACHUSETTS 1991-99 PE."

Al F Hassett

ISE INTEGRATED SYSTEMS ENGINEERING — ENGINEERING CONSULTANTS, A PROFESSIONAL CORPORATION
987 OLD EAGLE SCHOOL ROAD – SUITE 205 WAYNE, PA 19087 (215) 971-1900
CAD FILE: ERMX5010\ERMX1016 PLOTTED: 11/4/91_15:15

Environmental Resources Management, Inc.
Exton, Pennsylvania 19341 (215) 524-3500

$$ – THINK VALUE ENGINEERING – $$

Revisions

Symbol	Descriptions	Date	Approved

The ERM Group — ERM-New England, inc. 205 Portland Street • Boston, Massachusetts

U.S. ARMY ENGINEER DISTRICT CORPS OF ENGINEERS OMAHA, NEBRASKA

NEW BEDFORD HARBOR MASSACHUSETTS
SUPERFUND HAZARDOUS WASTE CLEANUP
HOT SPOT OPERABLE UNIT
TREATMENT BUILDING
SCHEMATIC DIAGRAM No.1

Designed By: F.P.D.
Drawn By: J.L.A.
Checked By: R.B.
Reviewed By: SCS
Submitted By: Al F Hassett
Chief: Section
Scale:
Date: DEC. 1991
Spec. No.: DACW45-92-R-0020
Contract No.: DACW45-92-C-0101
Drawing Code: CER47-400E-516

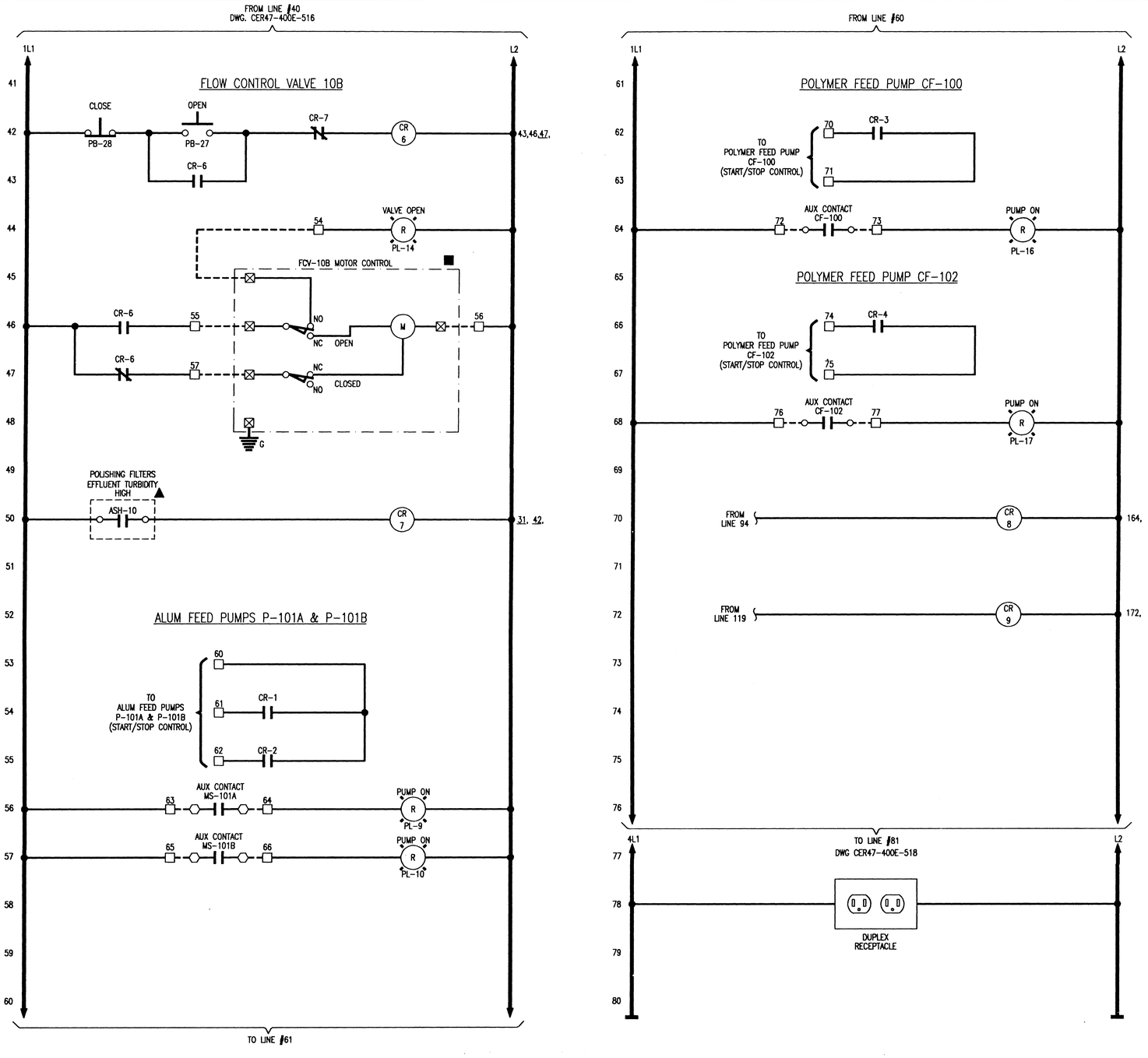

LEGEND

- □ TERMINALS LOCATED IN CONTROL PANEL
- ⊠ TERMINALS LOCATED IN VALVE CONTROL SYSTEM
- ⬡ TERMINALS LOCATED IN MCC
- ▲ INSTRUMENTS LOCATED IN CONTROL PANEL
- ——— PANEL WIRING
- - - - - FIELD WIRING
- ■ VALVE MOTOR HOUSING

REFERENCE TRANSMITTAL NO'S 16910-002-A AND 16910-003-A FOR AS-BUILTS AND LOGIC.

COMMONWEALTH OF PENNSYLVANIA REGISTERED PROFESSIONAL MAHENDRA P. MISRA ENGINEER No. 0174554

Mahendra P. Misra 11/11/91

"TEMPORARY PERMIT MASSACHUSETTS 1991-99 PE."

COMMONWEALTH OF MASSACHUSETTS ALAN F. HASSETT CIVIL No. 35702 REGISTERED PROFESSIONAL ENGINEER

Alan F. Hassett

COMMONWEALTH OF MASSACHUSETTS JAMES D. FITZGERALD SANITARY No. 35684 REGISTERED PROFESSIONAL ENGINEER

ISE INTEGRATED SYSTEMS ENGINEERING — ENGINEERING CONSULTANTS, A PROFESSIONAL CORPORATION
997 OLD EAGLE SCHOOL ROAD – SUITE 205 WAYNE, PA 19087 (215) 971-1900
CAD FILE: ERMX5010\ERMX1017 PLOTTED: 11/4/91_15:18

Environmental Resources Management, Inc.
Exton, Pennsylvania 19341 (215) 524-3500
The ERM Group

$$ – THINK VALUE ENGINEERING – $$

Revisions

Symbol	Descriptions	Date	Approved

The ERM Group — ERM-New England, Inc.
205 Portland Street • Boston, Massachusetts

U.S. ARMY ENGINEER DISTRICT
CORPS OF ENGINEERS
OMAHA, NEBRASKA

NEW BEDFORD HARBOR MASSACHUSETTS
SUPERFUND HAZARDOUS WASTE CLEANUP
HOT SPOT OPERABLE UNIT
TREATMENT BUILDING
SCHEMATIC DIAGRAM No. 2

Designed By: F.P.D.
Drawn By: J.L.A.
Checked By: R.B.
Reviewed By: SCS
Submitted By: Alan F. Hassett
Chief: Section

Scale:
Date: DEC. 1991
Spec. No.: DACW45-92-R-0020
Contract No.: DACW45-92-C-0101
Drawing Code: CER47-400E-517

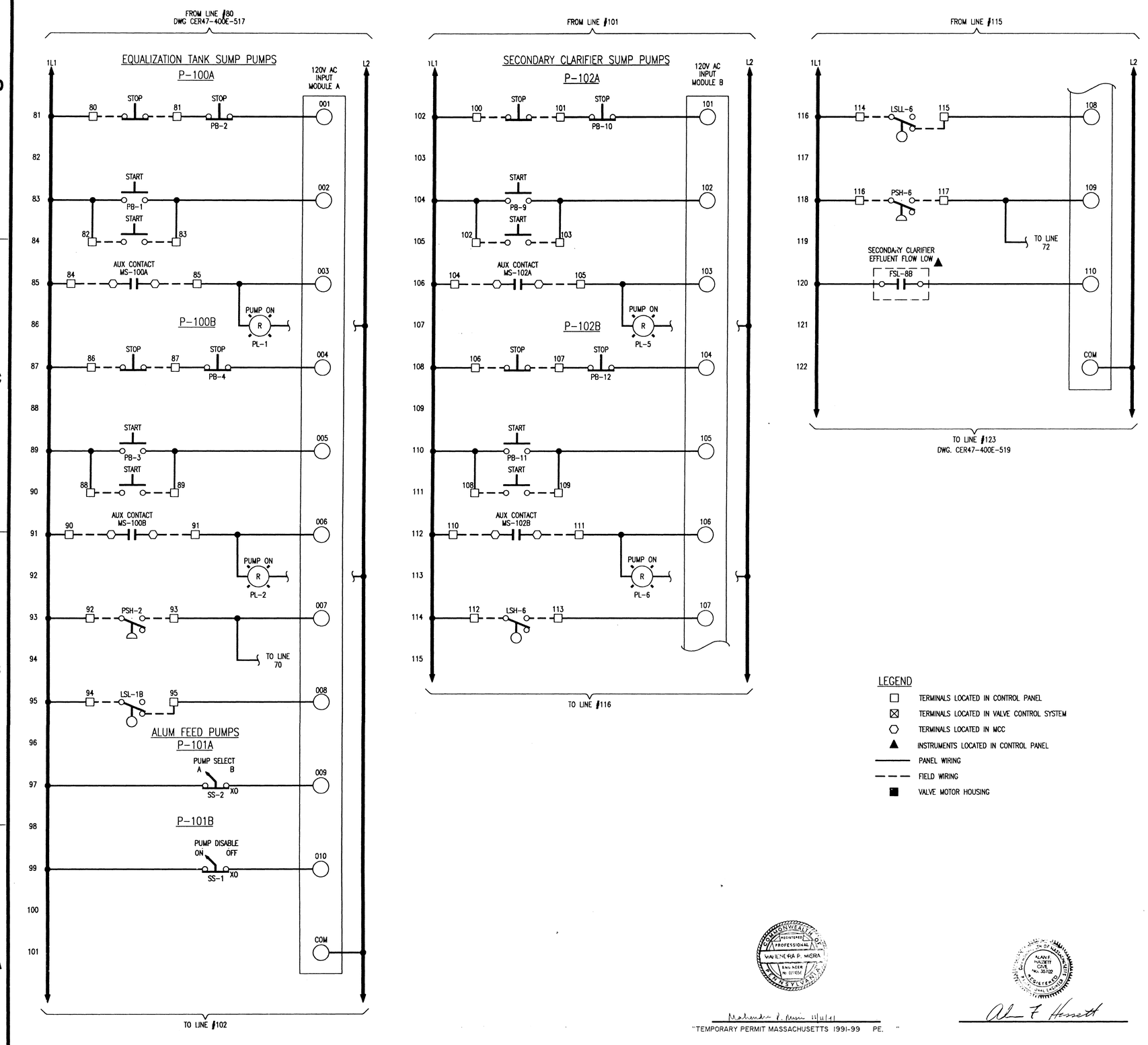

LEGEND

- □ TERMINALS LOCATED IN CONTROL PANEL
- ⊠ TERMINALS LOCATED IN VALVE CONTROL SYSTEM
- ⬡ TERMINALS LOCATED IN MCC
- ▲ INSTRUMENTS LOCATED IN CONTROL PANEL
- ——— PANEL WIRING
- - - - FIELD WIRING
- ■ VALVE MOTOR HOUSING

REFERENCE TRANSMITTAL NO'S 16910-002-A AND 16910-003-A FOR AS-BUILTS AND LOGIC.

"TEMPORARY PERMIT MASSACHUSETTS 1991-99 PE."

ISE INTEGRATED SYSTEMS ENGINEERING — ENGINEERING CONSULTANTS, A PROFESSIONAL CORPORATION, 897 OLD EAGLE SCHOOL ROAD – SUITE 208, WAYNE, PA 19087 (215) 971-1800
CAD FILE: ERMX5010\ERMX1018 PLOTTED: 8/16/91_15:45

Environmental Resources Management, Inc. — The ERM Group
Exton, Pennsylvania 19341 (215) 524-3500

$$ – THINK VALUE ENGINEERING – $$

Revisions			
Symbol	Descriptions	Date	Approved

The ERM Group — ERM-New England, Inc., 205 Portland Street • Boston, Massachusetts

U.S. ARMY ENGINEER DISTRICT
CORPS OF ENGINEERS
OMAHA, NEBRASKA

Designed By: F.P.D.
Drawn By: L.E.B.
Checked By: R.B.
Reviewed By: SCS
Submitted By: Chief, Section

NEW BEDFORD HARBOR — MASSACHUSETTS
SUPERFUND HAZARDOUS WASTE CLEANUP
HOT SPOT OPERABLE UNIT
TREATMENT BUILDING
PLC I/O WIRING DIAGRAM No.1

Scale:
Date: DEC. 1991
Spec. No.: DACW45-92-R-0020
Contract No.: DACW45-92-C-0101
Drawing Code: CER47-400E-518

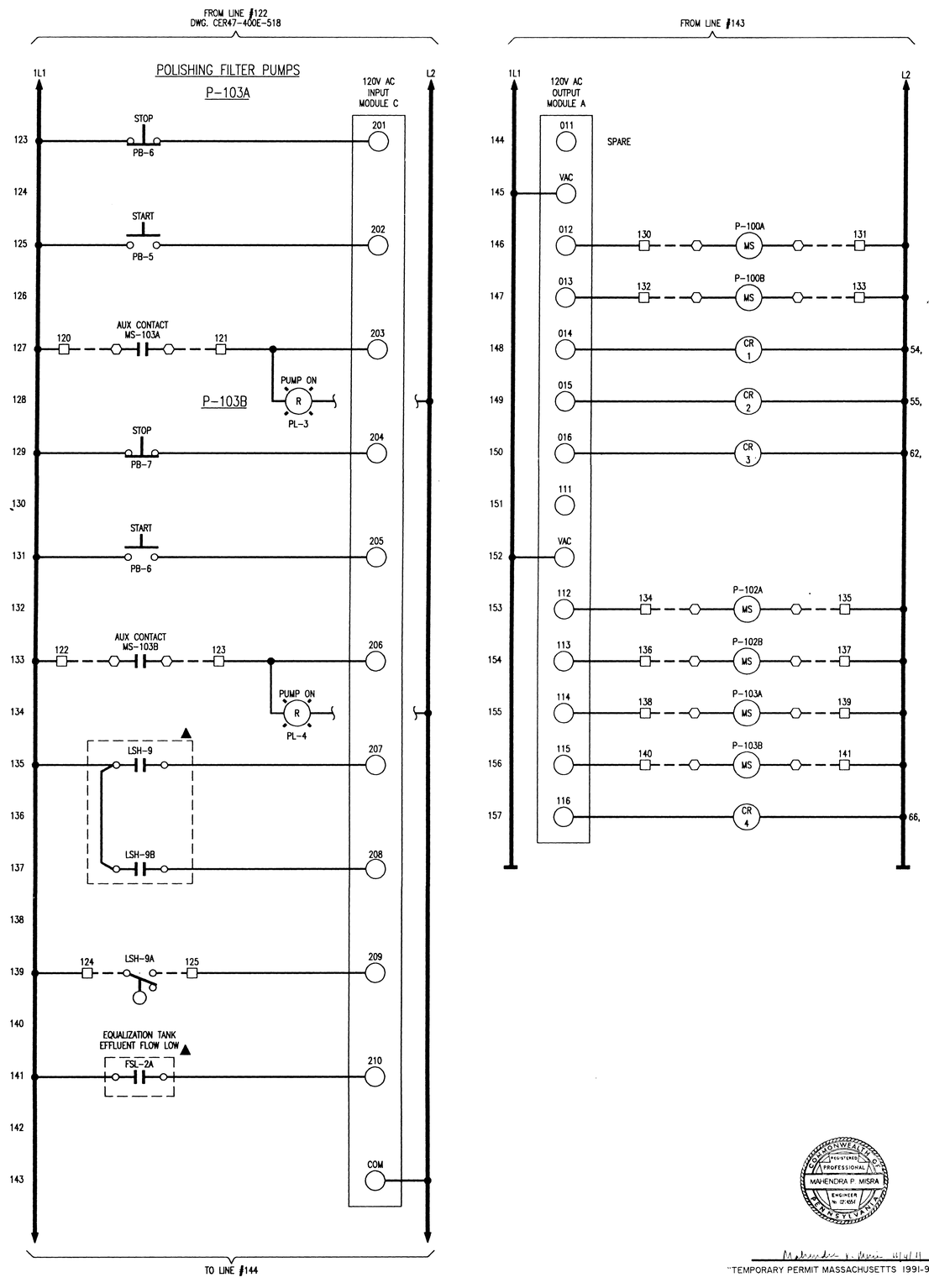

LEGEND

- TERMINALS LOCATED IN CONTROL PANEL
- TERMINALS LOCATED IN VALVE CONTROL SYSTEM
- TERMINALS LOCATED IN MCC
- INSTRUMENTS LOCATED IN CONTROL PANEL
- PANEL WIRING
- FIELD WIRING
- VALVE MOTOR HOUSING

REFERENCE TRANSMITTAL NO'S 16910-002-A AND 16910-003-A FOR AS-BUILTS AND LOGIC.

"TEMPORARY PERMIT MASSACHUSETTS 1991-99 PE."

$$ – THINK VALUE ENGINEERING – $$

Revisions

Symbol	Descriptions	Date	Approved

ERM-New England, Inc.
205 Portland Street • Boston, Massachusetts

U.S. ARMY ENGINEER DISTRICT
CORPS OF ENGINEERS
OMAHA, NEBRASKA

Designed By: F.P.D.
Drawn By: L.E.B.
Checked By: R.B.
Reviewed By: SCS
Submitted By: Chief: Section

NEW BEDFORD HARBOR — MASSACHUSETTS
SUPERFUND HAZARDOUS WASTE CLEANUP
HOT SPOT OPERABLE UNIT
TREATMENT BUILDING
PLC I/O WIRING DIAGRAM No.2

Scale:
Date: DEC. 1991
Spec. No.: DACW45-92-R-0020
Contract No.: DACW45-92-C-0101
Drawing Code:
CER47-400E-519

ISE INTEGRATED SYSTEMS ENGINEERING — ENGINEERING CONSULTANTS, A PROFESSIONAL CORPORATION
897 OLD EAGLE SCHOOL ROAD – SUITE 205 WAYNE, PA 19087 (215) 971-1900
CAD FILE: ERMX5010\ERMX1019 PLOTTED: 11/4/91_15:36

Environmental Resources Management, Inc.
Exton, Pennsylvania 19341 (215) 524-3500

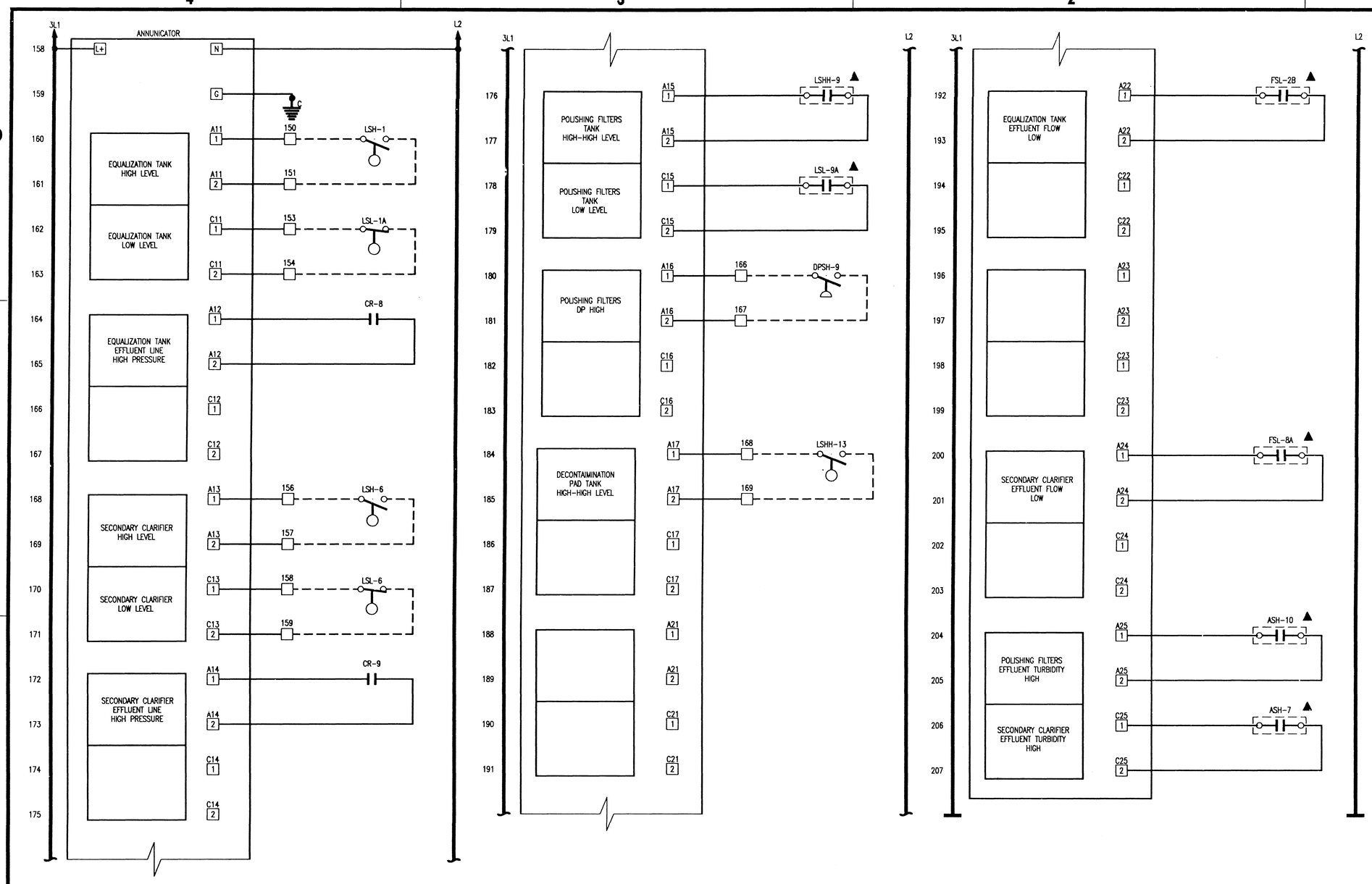

REFERENCE TRANSMITTAL NO'S 16910-002-A AND 16910-003-A FOR AS-BUILTS AND LOGIC.

LEGEND

- □ TERMINALS LOCATED IN CONTROL PANEL
- ⊠ TERMINALS LOCATED IN VALVE CONTROL SYSTEM
- ⬡ TERMINALS LOCATED IN MCC
- ▲ INSTRUMENTS LOCATED IN CONTROL PANEL
- ——— PANEL WIRING
- — — — FIELD WIRING
- ■ VALVE MOTOR HOUSING

NOTE:

A24
- COLUMN
- ROW
- TERMINAL BLOCK

"TEMPORARY PERMIT MASSACHUSETTS 1991-99 PE."

ISE INTEGRATED SYSTEMS ENGINEERING
ENGINEERING CONSULTANTS
A PROFESSIONAL CORPORATION
987 OLD EAGLE SCHOOL ROAD - SUITE 205 WAYNE, PA 19087 (215) 971-1900
CAD FILE: ERMX5010\ERMX1020 PLOTTED: 11/4/91_15:22

Environmental Resources Management, Inc.
Exton, Pennsylvania 19341 (215) 524-3500

$$ - THINK VALUE ENGINEERING - $$

Revisions

Symbol	Descriptions	Date	Approved

The ERM Group — ERM-New England, Inc. 205 Portland Street • Boston, Massachusetts

U.S. ARMY ENGINEER DISTRICT
CORPS OF ENGINEERS
OMAHA, NEBRASKA

Designed By: F.P.D.
Drawn By: L.E.B.
Checked By: R.B.
Reviewed By: SCS
Submitted By: Chief: Section

NEW BEDFORD HARBOR MASSACHUSETTS
SUPERFUND HAZARDOUS WASTE CLEANUP
HOT SPOT OPERABLE UNIT
TREATMENT BUILDING
ANNUNICATOR WIRING DIAGRAM

Scale:
Date: DEC. 1991
Spec. No.: DACW45-92-R-0020
Contract No.: DACW45-92-C-0101
Drawing Code: CER47-400E-520

B I L L O F M A T E R I A L

ITEM NO.	QUANTITY: ENCLOSURE	QUANTITY: SUBPANEL	QUANTITY:	QUANTITY: TOTAL	ITEM: SOURCE	ITEM: DESCRIPTION	ITEM: CATALOG NO.	NOTE/ DETAIL NO.
1	1			1		NEMA TYPE 12 ENCLOSURE, FREE STANDING 90 1/16"H, 36 1/16"W, 24 1/16"D		1
2	1			1		SUB PANEL FOR NEMA TYPE 12 ENCLOSURE 78"H X 32"W		1
3								
4								
5								
6								
7								
8								
9								
10	1			1		ANNUNICATOR, FLUSH MOUNT CABINET 2 ROWS, 7 COLUMNS		1,2
11	1			1		RECORDER, ELECTRONIC, MULTI-PEN, STRIP CHART WITH INTEGRAL INTEGRATOR		1,2
12	1			1		RECORDER, ELECTRONIC, MULTI-PEN, STRIP CHART		1,2
13	1			1		TOTALIZER, ELECTRONIC, 6-DIGITS		1,2
14	1			1		MICRO-PROCESSOR BASED, SINGLE LOOP, CONTROLLER		1,2
15		1		1		PROGRAMMABLE LOGIC CONTROLLER, 50 I/O POINTS, 120 VAC		1,2
16		2		2		ALARM RELAY, SINGLE, 1-N.O., 1-N.C. CONTACT, 5 AMP RATING		1,2
17		3		3		ALARM RELAY, DUAL, 2-N.O., 2-N.C. CONTACT, 5 AMP RATING		1,2
18		1		1		TELEPHONE AUTO DIALER		1,2
19								
20	17			17		PILOT LIGHT, 120 VAC WITH RED LENS		1
21	15			15		PUSH BUTTON UNIT, 1-N.O. CONTACT WITH GREEN HEAD (FLUSH)		1
22						PUSH BUTTON UNIT, 1-N.C. CONTACT WITH RED HEAD (FLUSH)		1
23						SELECTOR SWITCH, TWO POSITION, MAINTAIN CONTACTS 1-N.O., 1-N.C.		1
24								
25						LEGEND PLATE FOR PILOT LIGHTS, PUSH BUTTONS AND SELECTOR SWITCHES		1
26								
27								
28								
29								
30								
31	6			6		NAME PLATE, WHITE LAMINATED PHENOLIC WITH BLACK CORE, 1" X 10 3/4"		
32	14			14		NAME PLATE, WHITE LAMINATED PHENOLIC WITH BLACK CORE, 1/2" X 1 1/2"		
33	3			3		NAME PLATE, WHITE LAMINATED PHENOLIC WITH BLACK CORE, 1" X 4"		
34								
35								

B I L L O F M A T E R I A L

ITEM NO.	QUANTITY: ENCLOSURE	QUANTITY: SUBPANEL	QUANTITY:	QUANTITY: TOTAL	ITEM: SOURCE	ITEM: DESCRIPTION	ITEM: CATALOG NO.	NOTE/ DETAIL NO.
36								
37								
38								
39								
40								
41								
42								
43								
44								
45								
46								
47								
48								
49								
50	1			1		POWER SUPPLY, 24 VDC, .350 AMPS		1
51								1
52	1			1		DUPLEX RECEPTACLE, 125 VAC, 15 AMP RATING		1
53	1			1		SINGLE GANG OUTLET BOX		1
54	1			1		UTILITY BOX COVER		1
55								
56								
57								
58	4			4		CIRCUIT BREAKER, 120 VAC, 15 AMP RATING		1
59	7			7		RELAYS, 3PDT, 10 AMP CONTACTS RATING		1
60	180			180		TERMINAL BLOCK, TUBULAR CLAMP, MOUNTING, 600V, HEAVY DUTY		1
61	6			6		TERMINAL BLOCK, END SECTION, MOUNTS		1
62								
63								
64								
65	AS REQ			AS REQ		PLASTIC WIRING DUCTS SNAP-IN SLOT TYPE 2"W X 2"H		1
66	AS REQ			AS REQ		PLASTIC WIRING DUCT COVER 2"W		1
67								
68								
69								
70								

REFERENCE TRANSMITTAL NO'S 16910-002-A AND 16910-003-A FOR AS-BUILTS AND LOGIC.

NOTES:

1. CATALOG NUMBERS TO BE PROVIDED BY CONTRACTOR
2. SEE INSTRUMENT SPEC SHEET IN SPECIFICATION SECTION NO. 16911 FOR MORE DETAILS

"TEMPORARY PERMIT MASSACHUSETTS 1991-99 PE."

ISE INTEGRATED SYSTEMS ENGINEERING — ENGINEERING CONSULTANTS, A PROFESSIONAL CORPORATION
867 OLD EAGLE SCHOOL ROAD - SUITE 205 WAYNE, PA 19087 (215) 971-1900
CAD FILE: ERMX5010\ERMX1021 PLOTTED: 11/4/91 15:23

Environmental Resources Management, Inc. — The ERM Group
Exton, Pennsylvania 19341 (215) 524-3500

$$ - THINK VALUE ENGINEERING - $$

Revisions			
Symbol	Descriptions	Date	Approved

The ERM Group — ERM-New England, inc. — 205 Hartwell Street • Boston, Massachusetts

U.S. ARMY ENGINEER DISTRICT
CORPS OF ENGINEERS
OMAHA, NEBRASKA

Designed By: F.P.D.
Drawn By: L.E.B.
Checked By: R.B.
Reviewed By:
Submitted By:
Chief, Section

NEW BEDFORD HARBOR — MASSACHUSETTS
SUPERFUND HAZARDOUS WASTE CLEANUP
HOT SPOT OPERABLE UNIT
TREATMENT BUILDING
INSTRUMENT PANEL BILL OF MATERIAL

Scale:
Date: DEC 1991
Spec. No.: DACW45 92-R-0026
Contract No.: DACW45
Drawing Code: CER47-400E-521