Site File 6.4

SDMS DocID 000226336

Superfund Records Center
SITE: New Bedford
BREAK: 6.4
OTHER: 226336

RETURN TO UAO AR INDEX

Total Environmental Restoration Contract

New England Division

USACE Contract No. DACW33-94-D-0002

FOSTER WHEELER ENVIRONMENTAL CORPORATION

USACE CONTRACT NO. DACW33-94-D-0002
TASK ORDER NO. 017
TOTAL ENVIRONMENTAL RESTORATION CONTRACT

DRAFT
BASIS OF DESIGN / DESIGN ANALYSIS REPORT FOR WATER TREATMENT PLANT AT CDF C NEW BEDFORD HARBOR SUPERFUND SITE

New Bedford, Massachusetts

December 1999

Prepared for

U.S. Army Corps of Engineers
New England District
Concord, Massachusetts

TD99-220
12/1/99

USACE CONTRACT NO. DACW33-94-D-0002
TASK ORDER NO. 017
TOTAL ENVIRONMENTAL RESTORATION CONTRACT

DRAFT
BASIS OF DESIGN / DESIGN ANALYSIS REPORT FOR WATER TREATMENT PLANT AT CDF C NEW BEDFORD HARBOR SUPERFUND SITE

New Bedford, Massachusetts

December 1999

Prepared for

U.S. Army Corps of Engineers
New England District
Concord, Massachusetts

Prepared by

Foster Wheeler Environmental Corporation
470 Atlantic Avenue
Boston, MA 02210

Revision	Date	Prepared By	Approved By	Pages Affected
0	12/1/99	J. Brinkman	G. Willant	All

TD99-220
12/1/99

TABLE OF CONTENTS

1.0 INTRODUCTION 1-1

2.0 BACKGROUND INFORMATION 2-1
- 2.1 Site History 2-1
- 2.2 Upper and Lower Harbor Cleanup Remedy 2-1
- 2.3 Water Treatment Plant Design Overview 2-1
  - 2.3.1 Existing WTP 2-1
  - 2.3.2 Future WTPs 2-6

3.0 APPLICABLE OR RELEVANT AND APPROPRIATE REQUIRMENTS (ARARs) 3-1
- 3.1 Discharge Standards 3-1
- 3.2 Water Treatment Plant Location Considerations 3-1
- 3.3 Water Treatment Plant Design 3-2
- 3.4 Discharge Monitoring Plan 3-2
- 3.5 Operation and Maintenance 3-2
- 3.6 Wastewater Treatment Plant Operators 3-3
- 3.7 Wastewater Treatment Plant Air Emissions 3-3
- 3.8 City of New Bedford Construction Codes 3-3
- 3.9 Waterways Regulations 3-3

4.0 DESIGN CRITERIA 4-1

5.0 TREATABILITY STUDIES 5-1
- 5.1 Summary of Previous USACE Studies 5-1
  - 5.1.1 Settleability 5-1
  - 5.1.2 Flocculation/Filtration 5-1
  - 5.1.3 Carbon Adsorption/UV Oxidation 5-1
- 5.2 Summary of Previous ERM Studies 5-2
  - 5.2.1 Settleability 5-2
    - 5.2.1.1 Primary Settling – Cell #1 5-2
    - 5.2.1.2 Equalization – Cell #2 5-2
    - 5.2.1.3 Secondary Settling – Cell #3 5-2
  - 5.2.2 Flocculation/Filtration 5-2
    - 5.2.2.1 Flocculation 5-2
    - 5.2.2.2 Filtration 5-2
  - 5.2.3 Carbon Adsorption/UV Oxidation 5-3
- 5.3 Operable Unit #1 (Hot Spot Sediments) WTP Operation Summary 5-3
- 5.4 Foster Wheeler Treatability Studies 5-3
  - 5.4.1 Performance Testing of Existing WTP 5-4
  - 5.4.2 UV/Oxidation 5-4
  - 5.4.3 Influent Characterization 5-5
  - 5.4.4 Column Settling Tests 5-5
  - 5.4.5 Jar Testing 5-5

6.0 DREDGING TECHNOLOGIES 6-1
- 6.1 Description 6-1
- 6.2 Sediment/Water Balances 6-1

7.0 PROCESS DESCRIPTION 7-1
7.1 Overview 7-1
7.2 Mass Balance 7-1
7.3 Existing WTP 7-3
7.3.1 Description of Existing Treatment System 7-3
7.3.1.1 Initial Settling (CDF Cell #1) 7-3
7.3.1.2 Equalization Basin (CDF Cell #2) 7-4
7.3.1.3 Flocculation/Chemical/Physical Treatment 7-4
7.3.1.4 Secondary Settling (CDF Cell #3) 7-4
7.3.1.5 Filtration 7-4
7.3.1.6 UV/Oxidation 7-5
7.3.2 Instrumentation and Controls 7-5
7.3.2.1 Flocculation Feed Pumps (P-100A/B, located in CDF Cell #2) 7-5
7.3.2.2 Alum Feed Pumps (P-101A/B) 7-6
7.3.2.3 Filter Feed Pumps (P-102A/B, located in CDF Cell #3) 7-6
7.3.2.4 Turbidity Meter (AE7) 7-6
7.3.2.5 Polishing Filter Feed Pumps (P-103A/B) 7-6
7.3.2.6 Polishing Filter Flow Control Valve (FCV-9) 7-6
7.3.2.7 Turbidity Meter (AIT-10) 7-6
7.3.2.8 UV/Oxidation System 7-6
7.3.3 Proposed Process Modifications/Upgrades 7-7
7.3.3.1 Revision #1 7-7
7.3.3.2 Revision #2 7-8
7.3.4 Costs to Upgrade Existing WTP 7-9
7.3.5 Incorporation of Existing WTP into Future Treatment System 7-9
7.4 New Wastewater Treatment Systems 7-9
7.4.1 Initial CDF Settling/Water Collection 7-9
7.4.2 Flocculation/Physical Treatment/Chemical Treatment 7-10
7.4.3 Secondary Settling 7-10
7.4.4 Equalization 7-10
7.4.5 Filtration 7-10
7.4.6 UV/Oxidation 7-10
7.4.7 Treatment Plant Control System 7-11
7.4.7.1 Description of the Control System Architecture 7-11
7.4.7.2 Graphic Screens 7-11
7.4.7.3 Alarm and Event System 7-11
7.4.7.4 Data Logging and Report 7-12
7.4.7.5 Motor Control 7-12
7.5 Monitoring Requirements 7-12
7.6 Acquisition Strategy 7-13

8.0 PRELIMINARY DRAWINGS, SPECIFICATIONS, AND EQUIPMENT DESCRIPTION 8-1
8.1 Preliminary Drawings 8-1
8.2 Applicable Specifications, Codes, and References 8-1
8.3 CDF Transfer Pumping System 8-1
8.3.1 CDF Transfer Pumps 8-1
8.3.2 CDF Conveyance Piping 8-2
8.3.3 CDF Transfer Sump 8-2

8.4 Initial Settling Basin 8-2
8.4.1 Chemical Addition System 8-2
8.5 Equalization Basin 8-2
8.5.1 Transfer Pumps 8-2
8.5.2 Equalization Transfer Sump 8-2
8.6 Water Treatment Systems 8-2
8.6.1 Pumps 8-2
8.6.2 Filtration 8-3
8.6.3 UV/Oxidation System 8-3
8.6.4 Hydrogen Peroxide Feed System 8-3
8.6.5 Filtration Feed Sump 8-3

LIST OF FIGURES

Figure 2-1 New Bedford Harbor Superfund Site 2-2
Figure 2-2 Approximate Locations of Areas to be Dredged and Confined Disposal Facilities 2-3
Figure 2-3 Site Location Map of Upper Harbor CDFs A, B, and C 2-4
Figure 2-4 Conceptual Location of the Lower Harbor CDF D 2-5
Figure 7-1 Wastewater Flow Rate Schematic 7-2

LIST OF TABLES

Table 2-1 OU #2 (Hot Spot) Discharge Standards 2-6
Table 2-2 Sediment Contaminant Concentrations - OU #1 and OU #2 2-7
Table 2-3 OU #1 Monthly Discharge Standards 2-7
Table 3-1 Monthly Average Discharge Standards (OU #1) 3-1
Table 4-1 Design Criteria 4-1
Table 5-1 Operable Unit #1 (Hot Spots) Discharge Limits 5-2
Table 7-1 Water Treatment Process Monitoring Requirements 7-12
Table 7-2 Water Treatment Facility Work Packages 7-13

LIST OF APPENDICES

Appendix A ERM Treatability Study Results
Appendix B Calgon Corporation UV/Oxidation Design Studies
Appendix C Hot Spot WTP Operations Effluent Data (April 1994 - September 1995)
Appendix D Foster Wheeler Treatability Studies
Appendix E Water/Sediment Mass Balance Calculations
Appendix F Cost Estimate
Appendix G Design Calculations
Appendix H List of Technical Specifications
Appendix I Operation and Maintenance Manual Outline
Appendix J Draft Submittal Register

1.0 INTRODUCTION

This report is the Basis of Design/Design Analysis (BD/DA) for the water treatment systems associated with the dredging activities for Operable Unit #1 (OU #1) of the New Bedford Harbor Superfund Site.

This BD/DA contains:

- Background information for the New Bedford Harbor Superfund Site (Section 2.0);
- Applicable or Relevant and Appropriate Requirements (ARARs) (Section 3.0);
- The Design Criteria for the Water Treatment System (Section 4.0);
- Results and Conclusions of treatability studies conducted by USACE, ERM, and Foster Wheeler (Section 5.0);
- A discussion of the dredging technology(ies) to be utilized with respect to their impact on the water treatment system influent (Section 6.0);
- A description of the water treatment process and how the existing WTP will be incorporated (Section 7.0); and
- A summary of the design criteria for each water treatment system component (Section 8.0).

2.0 BACKGROUND INFORMATION

2.1 *Site History*

The New Bedford Harbor Superfund Site (the Site), located in Bristol County, Massachusetts, extends from the shallow northern reaches of the Acushnet River estuary south through the commercial harbor of New Bedford and into 17,000 adjacent areas of Buzzards Bay (Figure 2-1). Industrial and urban development surrounding the harbor has resulted in sediments becoming contaminated with high concentrations of many pollutants, notably polychlorinated biphenyls (PCBs) and heavy metals, with contaminant gradients decreasing from north to south. From the 1940s into the 1970s two electrical capacitor manufacturing facilities, one located near the northern boundary of the site and one located just south of the New Bedford Harbor hurricane barrier, discharged PCB-wastes either directly into the harbor or indirectly via discharges to the City's sewerage system.

The New Bedford Harbor Site has been divided into three operable units, or phases of site cleanup: The hot spot operable unit (OU #2), the upper and lower harbor operable unit (OU #1), and the Buzzards Bay or outer harbor operable unit. This report provides the design basis for the water treatment system for OU #1.

2.2 Upper and Lower Harbor Cleanup Remedy

Approximately 450,000 yd^3 of PCB contaminated sediment spread over about 170 acres will be dredged from the upper and lower harbor. In the upper harbor north of Coggeshall Street, sediments above 10 mg/l (ppm) PCBs will be dredged, while in the lower harbor and in the salt marshes, sediments above 50 ppm PCBs will be dredged. Intertidal sediments in specific areas adjacent to homes or in areas prone to beach combing will be removed if PCB levels are above 1 and 25 ppm, respectively. The approximate locations of the areas to be dredged are shown in Figure 2-2.

In accordance with the Record of Decision (ROD) for OU #1, the dredged sediments will be placed in four confined disposal facilities (CDFs). Seawater decanted from these sediments will be treated before discharge back to the harbor. The units of the water treatment plant (WTP) used during the hot spot remedy will be utilized, but due to the increased dredge volume, at least three new similarly sized treatment trains will also be designed and constructed adjacent to the existing facility. The water treatment will consist of a series of physical and chemical processes to remove suspended solids, heavy metals and PCBs. Figures 2-3 and 2-4 show the locations of the CDFs.

2.3 Water Treatment Plant Design Overview

The following sections provide an overview of the existing water treatment facility design and operation, and how the basis of design for the future water treatment facility was established.

2.3.1 Existing WTP

In October 1990, ERM – New England, Inc. (ERM) was contracted by the United States Army Corps of Engineers (USACE) to prepare a design for a water treatment facility for the New Bedford Harbor Superfund Site. The purpose of the water treatment facility was to treat water generated during the dredging of the sediments for the Hot Spot Operable Unit (OU #2). The Hot Spot sediments contained PCB concentrations in excess of 4,000 ppm. Detailed data on the characteristics of this sediment can be found in the Draft Final Feasibility Study (July 1989) and the ROD for OU #2 (1990).

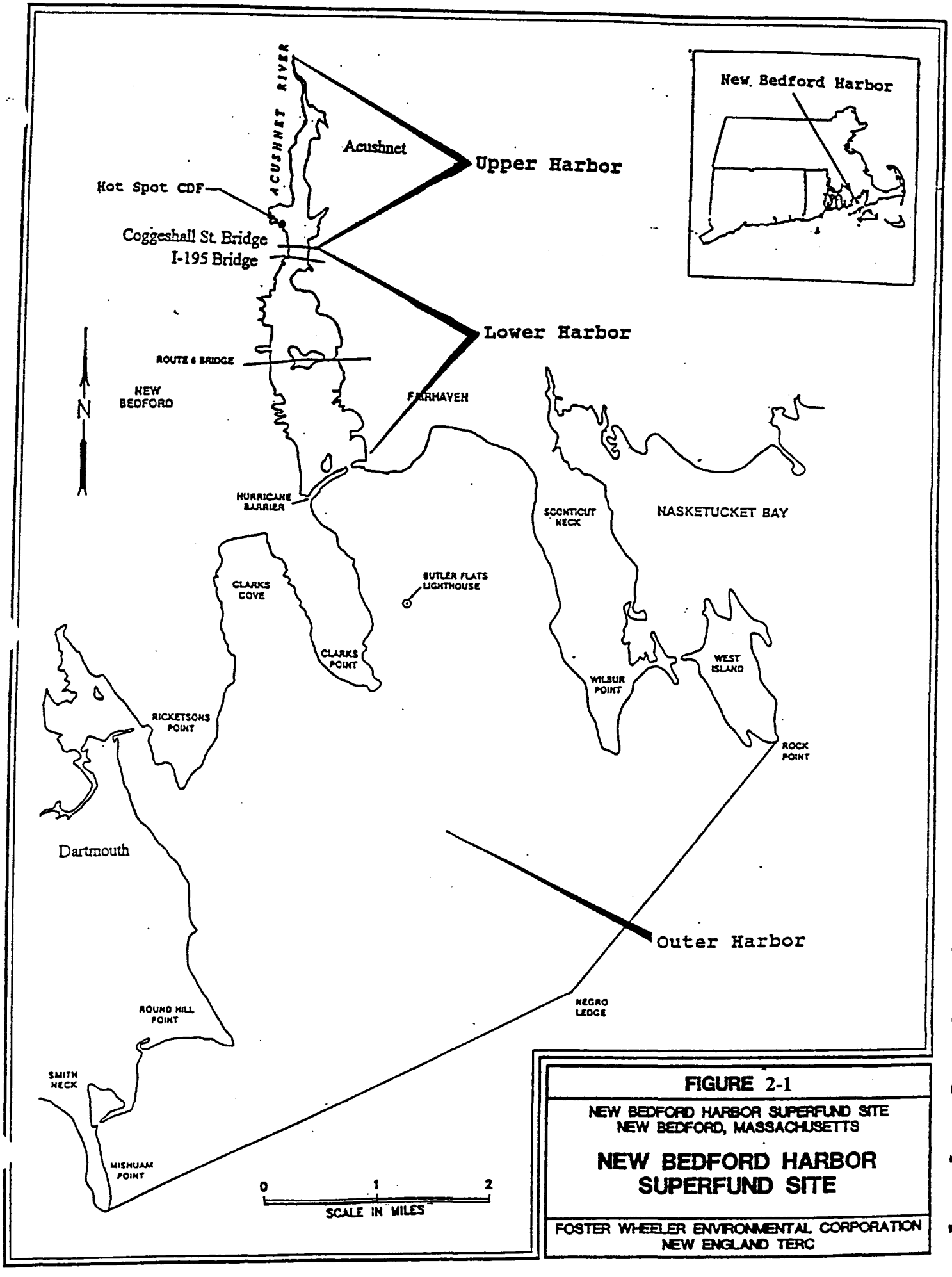

FIGURE 2-1

NEW BEDFORD HARBOR SUPERFUND SITE
NEW BEDFORD, MASSACHUSETTS

NEW BEDFORD HARBOR SUPERFUND SITE

FOSTER WHEELER ENVIRONMENTAL CORPORATION
NEW ENGLAND TERC

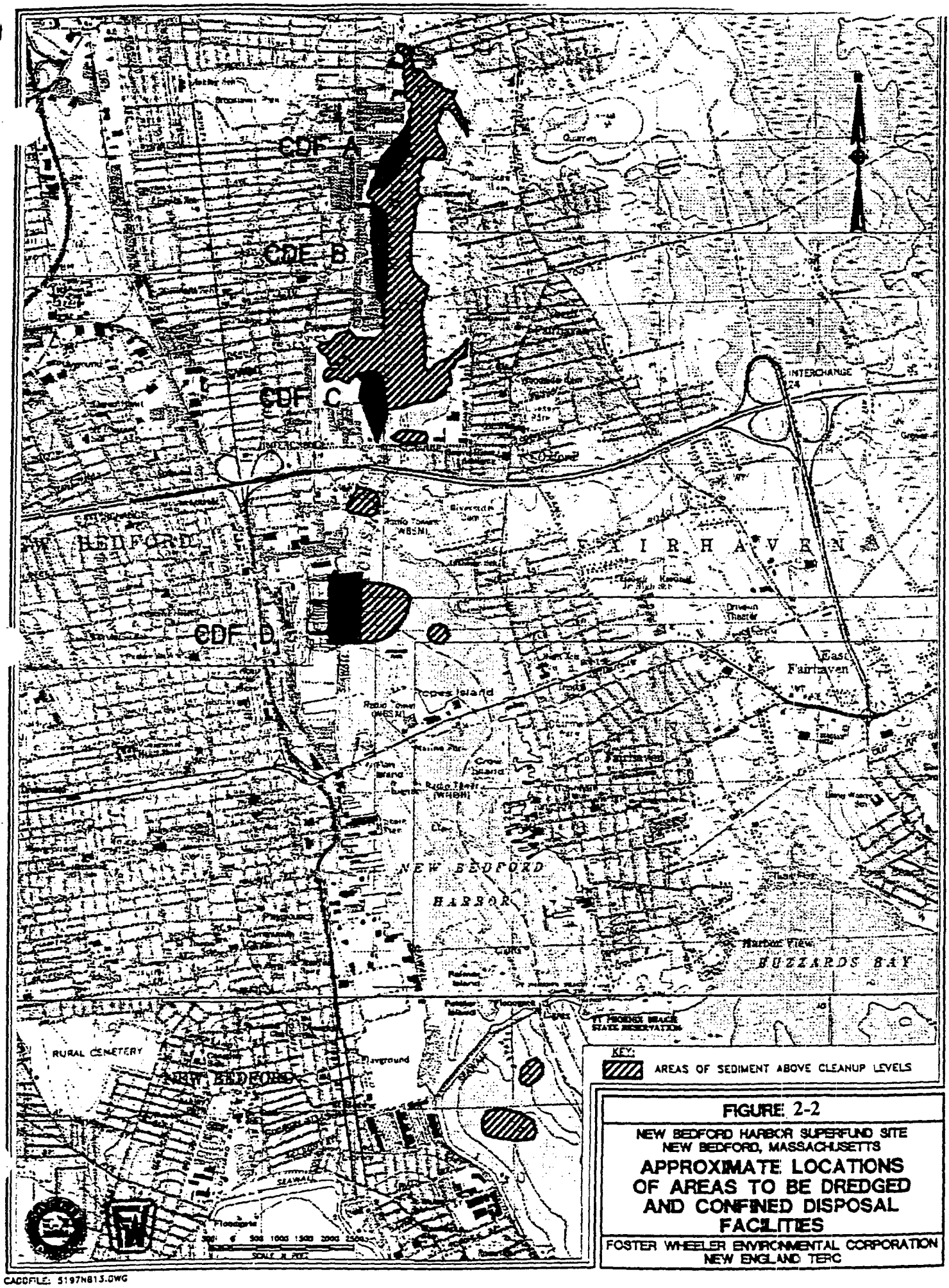

FIGURE 2-2

NEW BEDFORD HARBOR SUPERFUND SITE
NEW BEDFORD, MASSACHUSETTS

APPROXIMATE LOCATIONS OF AREAS TO BE DREDGED AND CONFINED DISPOSAL FACILITIES

FOSTER WHEELER ENVIRONMENTAL CORPORATION
NEW ENGLAND TERC

CADFILE: 5197N813.DWG

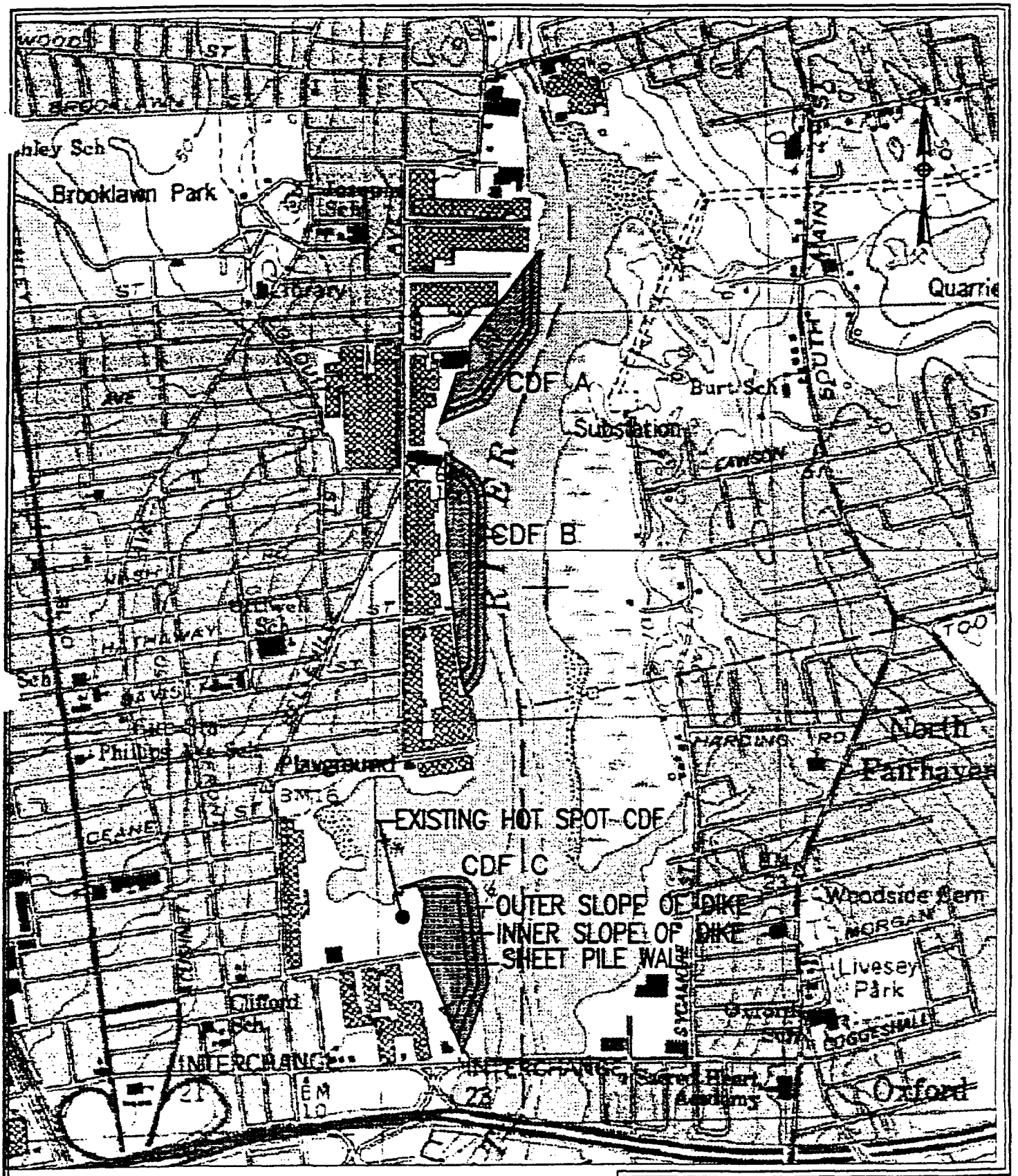

500 0 500 1000 1500 2000

SCALE IN FEET

FIGURE 2-3

NEW BEDFORD HARBOR SUPERFUND SITE
NEW BEDFORD, MASSACHUSETTS

SITE LOCATION MAP OF UPPER HARBOR CDFs A, B, AND C

FOSTER WHEELER ENVIRONMENTAL CORPORATION
NEW ENGLAND TERC

CADDFILE: 5197N812.DWG

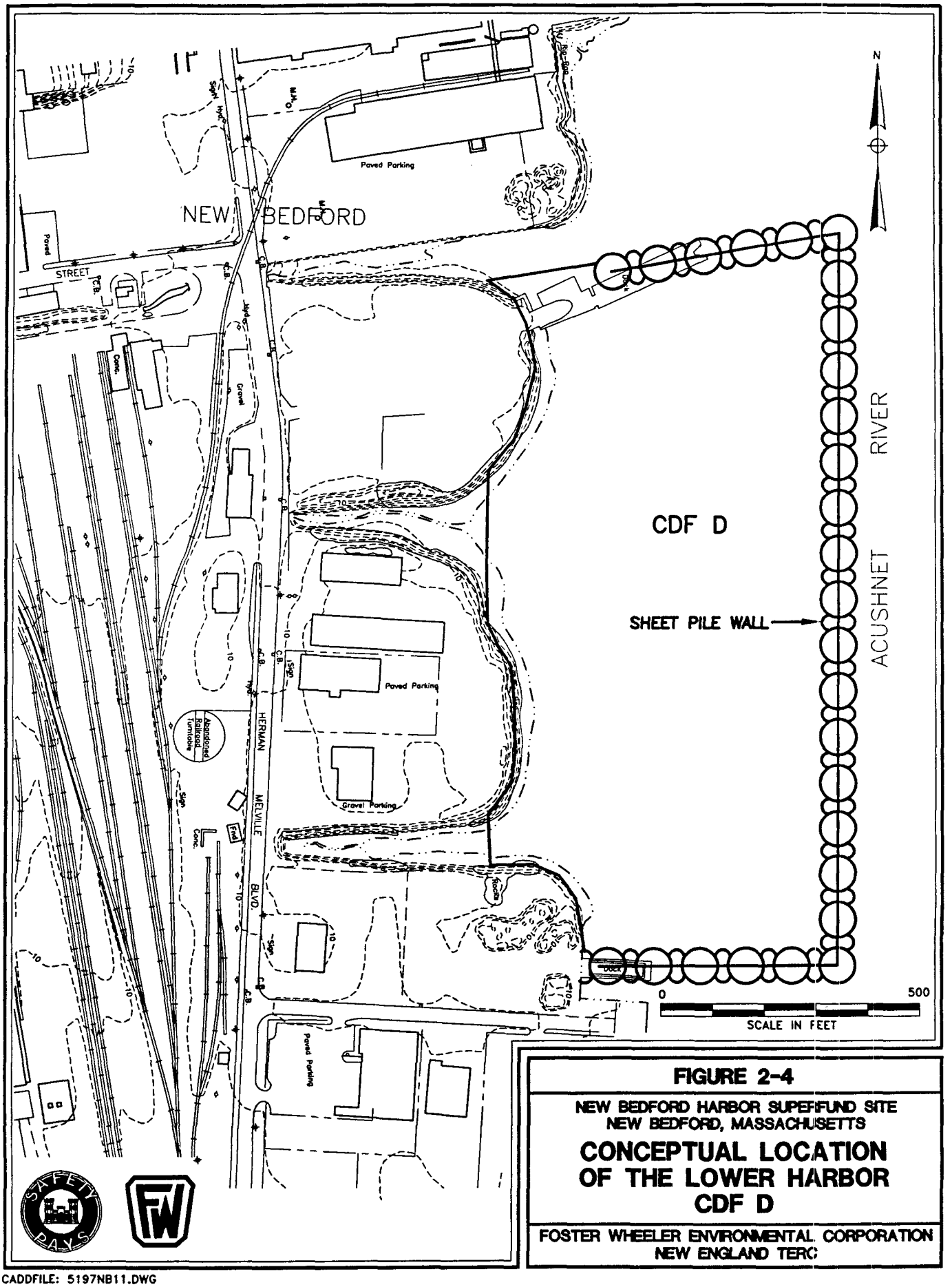

FIGURE 2-4

NEW BEDFORD HARBOR SUPERFUND SITE
NEW BEDFORD, MASSACHUSETTS

CONCEPTUAL LOCATION OF THE LOWER HARBOR CDF D

FOSTER WHEELER ENVIRONMENTAL CORPORATION
NEW ENGLAND TERC

CADDFILE: 5197NB11.DWG

The design and discharge requirements were based on treatability studies conducted by ERM with site specific sediment and seawater. Based on these treatability studies it was determined that the most effective removal of PCBs and heavy metals would be obtained when the Hot Spot wastewater was treated by the following processes:

1. Settling the dredged solids in a confined disposal facility (CDF)
2. Equalizing the wastewater generated from the CDF
3. Flocculation of the suspended solids using alum
4. Secondary settling of the wastewater
5. Filtration using a sand filter and a polishing filter
6. UV/Oxidation with hydrogen peroxide

Utilizing the results of the ERM treatability studies, ERM's effluent calculations, and the USEPA's estimates of variability, the EPA established applicable discharge standards that are presented in Table 2-1. All the data and calculations supporting the development of these discharge standards can be found in ERM's Final Design Analysis for New Bedford Harbor/Hot Spot Operable Unit Superfund Site (November 1991).

Table 2-1
OU #2 (Hot Spot) Discharge Standards

Contaminant	Monthly Average (ug/l)	Daily Maximum (ug/l)
PCBs	0.71	1.3
Cadmium	6.0	10.7
Chromium	7.1	12.8
Copper	8.3	15
Lead	4.8	8.5

Based on ERM's design, the existing WTP was constructed 1994 and operated continuously from April 1994 to September 1995. During the 17 months of operation the WTP consistently met the monthly average standards for PCBs and heavy metals. A more detailed discussion of the WTP operations for OU #2 is provided in Section 5.0.

2.3.2 Future WTPs

The average concentration of PCBs in the sediments to be dredged for OU#1 is expected to be less than 100 ppm (Table 2-2). Therefore, based on the effluent data generated during the WTP operations for OU#2, and the fact that the PCB concentrations in the OU#1 sediments will be nearly two orders of magnitude less than the Hot Spot sediments, the EPA established new discharge standards for OU#1 (Table 2-3). In addition, since the physical characteristics of the harbor sediments are anticipated to be relatively uniform, the EPA determined that the existing treatment processes (i.e., settling, flocculation, filtration and UV/Oxidation) would be effective in meeting these new monthly discharge standards.

However, in order to confirm the effectiveness of the existing water treatment system, Foster Wheeler performed several new treatability studies utilizing representative sediment from OU#1. These treatability tests included settling tests, jar tests (flocculation), UV/Oxidation bench scale design tests, and influent characterization tests. In addition, as a worse case scenario, performance tests were conducted utilizing the existing WTP and wastewater associated with the hot spot sediments contained within CDF Cell #1. A more detailed discussion of the Foster Wheeler treatability tests is provided in

Section 5.0. The results of these treatability studies as well as available historical data was utilized in order to develop the basis of design which is presented in Section 7.0 of this report.

Table 2-2
Sediment Contaminant Concentrations - OU #1 and OU #2

Contaminant	OU #1 (mg/l)	OU #2 (mg/l)
PCBs	100	4,000 - 5,000
Cadmium	16	36
Chromium	580	545
Copper	1,400	1,330
Lead	490	1,010

Note: More detailed sediment charactaerization data can be found in the Record of Decision for each operable unit.

Table 2-3
OU #1 Monthly Discharge Standards

Contaminant	Monthly Discharge Standard (ug/l)
PCBs	0.065 per Aroclor (0.455 ug/l total)
Cadmium	9.3
Chromium	50
Copper	5.6
Lead	8.5

3.0 APPLICABLE OR RELEVANT AND APPROPRIATE REQUIRMENTS (ARARS)

Excavated sediments will be pumped to one of four CDFs where the solids will settle out and the supernatant will be pumped to the water treatment facility. The supernant is anticipated to be contaminated with PCBs and heavy metals which (per the ROD) must be treated to meet Federal and State of Massachusetts Ambient Water Quality Criteria (AWQCs) for PCBs, copper, lead, chromium and cadmium prior to discharge to New Bedford Harbor.

Since the treatment facilities are considered to be "on-site," permits are not required to construct and operate the facilities or to discharge the treated effluent. However, the treatment facilities will comply with the substantive Massachusetts requirements for treatment plant operations, including not allowing waste to bypass the system, having alarm systems in place, and performing proper maintenance.

3.1 Discharge Standards

New Bedford Harbor is classified as a SB coastal water. Discharges to the harbor are required to meet Federal Ambient Water Quality Criteria (AWQC) and State of Massachusetts Ambient Water Quality Standards for SB waters. The EPA Regional Administrator, under Section 121(d)(4)(B) of CERCLA, has waived the requirements of 40 CFR 122.4(I) of the Clean Water Act to allow the discharge of treated supernatant into a water body (New Bedford Harbor), which does not meet the AWQC for PCBs and copper. *As per the ROD, it is anticipated that the treated supernatant will meet existing AWQC for* cadmium, chromium and lead. The 0.03 ug/l AWQC for PCBs and the AWQC for copper will ultimately be met through a phased Total Maximum Daily Load (TMDL) approach.

State surface water discharge regulations 314 CMR 3.10(4) require that the dewatering and treatment of dredged sediments must meet the Best Available Control Technology (BACT). The water discharged from the treatment facility must be treated using the BACT to approach as closely as possible the monthly average discharge standards presented in Table 3-1. The monthly average discharge standards for OU #2 (Hot Spot sediment) are also in Table 3-1 for comparison purposes.

Table 3-1
Monthly Average Discharge Standards

Contaminant	OU #1 Discharge Standard (ug/l)	OU #2 Discharge Standard (ug/l)
PCBs	0.065 per Aroclor (0.455 ug/l total)	0.71 ug/l (total)
Cadmium	9.3	6.0
Chromium	50	7.1
Copper	5.6	8.3
Lead	8.5	4.8

3.2 Water Treatment Plant Location Considerations

The new water treatment facilities will be located in a pre-fabricated building, which will be constructed adjacent to the existing facility. Both facilities will be at least 100-200 yards from the shoreline and within the coastal zone area as defined by CZM (301 CMR 21.00). The treatment facilities will be located outside of the 100 foot coastal wetlands/riverfront area buffer zone as defined by 310 CMR 10.02(a) and 310 CMR 10.58(2)(a). The Coastal Storm Flowage Resource Area is defined in 310 CMR 12.02 and 310 CMR 10.02(l)(d) as "the land between mean low water and the landward boundary of the 100 year flood". Based on the FEMA flood map for the New Bedford area, it appears that the treatment

plant located at Sawyer Street is within the Coastal Storm Flowage Resource Area. Therefore, the design of the additional treatment building(s) must incorporate erosion and sedimentation controls, stormwater management controls and Best Management Practices for implementation during construction to prevent offsite impacts to the resource area.

3.3 Water Treatment Plant Design

Since the treatment facilities will be located greater than 100 feet from the Coastal Wetland resource areas, and greater than 25 feet from the Riverfront Area, plant construction is not directly under the jurisdiction of the New Bedford Conservation Commission. The Riverfront Area measured horizontally from and parallel to the river's mean annual high-water line is 25 feet in New Bedford.

Based upon the effluent data for the existing water treatment facility (OU #2, 1994-95), it is anticipated that the treatment system will meet the BACT. Each treatment train will consist of filtration for suspended solids removal followed by UV oxidation for organic constituent removal. Each treatment train will have a capacity of 350 gpm and up to four (4) treatment trains will be operated in parallel resulting in an estimated treatment capacity of 1,400 gpm. The supernatant will be pumped from the CDFs to the treatment facilities and the treated effluent will be pumped to a discharge point in New Bedford Harbor using aboveground, single-walled PVC piping.

Hydrogen peroxide solution to be used in the UV oxidation process will contain no more than 50% hydrogen peroxide by weight, therefore EPA and Massachusetts requirements for storage of extremely hazardous substances (40 CFR 355) will not be applicable to project activities. (Hydrogen peroxide containing greater than 52% by weight is regulated as an extremely hazardous substance.)

3.4 Discharge Monitoring Plan

A discharge monitoring plan will be developed and implemented for the site in accordance with Massachusetts' requirements for discharges to surface waters (314 CMR 3.00 – 4.00). The discharge monitoring plan will be based upon the plan used for the Hot Spot Dredging Project (OU #2). Since the treatment is a continuous flow process, effluent sampling will be conducted as the effluent is discharged. Refrigerated automatic composite samplers will be used to obtain 48-hour composite samples from each process train. Every two operating days, the samplers will be opened and the composite samples analyzed for PCBs, cadmium, chromium, copper, lead, and Total Suspended Solids (TSS). EPA and MADEP certified laboratories will perform the analyses. Sampling and analysis will be performed in accordance with 40 CFR 136. Monthly discharge monitoring reports will be submitted to the EPA Project Manager and the MADEP Project Manger.

Any exceedance of the discharge standards will be immediately reported by the Foster Wheeler Project Manager to the USACE Project Manager and to the Foster Wheeler Regional Environmental Compliance, Safety and Health, and Quality Assurance (ESQ) Manager.

3.5 Operation and Maintenance

Although not regulated as "treatment works", the wastewater treatment facilities will be properly operated and maintained to meet substantive, relevant and appropriate requirements of Massachusetts regulations for Operation and Maintenance of Wastewater Treatment Works (314 CMR 12.03, 12.06, 12.08, and 12.10-12). The treatment facility design will not allow wastewater to bypass the treatment system and will have an alarm system in place. The treatment facility will be equipped with adequate tools, spare parts, equipment and personnel to ensure safe and proper operation. Discharge activities will

be immediately suspended if the facility fails to operate properly or if analytical reports indicate that any of the discharge limits have been exceeded. Discharging will not resume until corrective action is implemented.

3.6 Wastewater Treatment Plant Operators

Personnel operating the wastewater treatment facilities are not required to possess a current Industrial WWT Operators License (Class M1-M4) from the Massachusetts Board of Registration of Operators of Wastewater Treatment Facilities because the plants are not considered to be "treatment works". Operators must have the education and skill necessary to operate and maintain the treatment facility in accordance with the substantive, relevant and appropriate Massachusetts regulations. Foster Wheeler will identify the necessary requirements and develop job descriptions that will provide for the selection of qualified operators.

3.7 Wastewater Treatment Plant Air Emissions

The intended water treatment plant design does not include any point source air discharges. The plant will not be subject to any air permitting substantive requirements because the potential air emissions from the wastewater treatment facility will be less than one ton per year of any criteria air contaminant, and will be less than one ton per year for the sum of all non-criteria air contaminants.

3.8 City of New Bedford Construction Codes

While a City of New Bedford Construction permit will not be required, the New Bedford Building Inspector will likely require the project to comply with the substantive requirements of a construction permit prior to constructing the wastewater treatment plant. The appropriate City officials will be consulted prior to beginning the plant construction. All design drawings will be stamped by a Massachusetts Registered Professional Engineer. Massachusetts licensed plumbers and electricians will be used for all plumbing and electrical work and utility connections.

3.9 Waterways Regulations

Construction and operation of the treatment facilities are subject to Massachusetts Waterway regulations (310 CMR 9.00) because the facilities are located on filled tidelands. Construction of the plant(s) will not result in the placement of structures or fill material in the waterway or within the 100 foot coastal wetland resource area buffer zone extending from the riverfront, or interfere with public rights of navigation or water-dependent uses as defined by the regulations. Construction and operation of the treatment facilities will not interfere with public access to the water because alternative access is available. Discharge of the treated effluent is regulated by the Clean Water Act (40 CFR 122) and Massachusetts Surface Water Quality Standards (314 CMR 4.00).

4.0 DESIGN CRITERIA

The design criteria for the water treatment facility was developed based on input from USEPA, USACE, and MADEP. This input was based primarily on previous operational experience with the existing water treatment facility during the Hot Spot sediment dredging operations. The design criteria for the water treatment system for the project can be categorized into five groups based on specific design objectives. Table 4-1 presents the objectives and associated design criteria.

Table 4-1
Design Criteria

Location Objectives	1. The water treatment system is to be central to the dredging operations in order to minimize the number of treatment facilities required. 2. Ensure that there is sufficient space for flocculation/settling basins necessary to achieve maximum water detention times. 3. Minimize construction and operational costs associated with treating the wastewater generated during the dredging operations.
Hydraulic Objectives	1. To handle flow capacity of supernatant such that the dredging operations can continue uninterrupted. 2. To design a WTP with a treatment capacity to handle a wastewater flow rate of 1,200 gpm based on the project utilizing two 2,100 gpm hydraulic dredges operating a total of 16 hours/day, 6 days/week, and discharging a 5% slurry by weight. 3. WTP to operate 24 hours/day, 7 days/week. 4. Utilize floating pipe to convey supernatant from CDFs to water treatment facility in order to minimize easements and construction costs.
Discharge Objectives	1. Reduce the total suspended solids and contaminant concentrations of the supernatant such that the following total monthly average discharge standards are achieved: PCBs 0.065 ug/l per Aroclor (0.455 ug/l total) Copper 5.6 ug/l Cadmium 9.3 ug/l Chromium 50 ug/l Lead 8.5 ug/l
Treatment Objectives	1. Utilize flocculation/filtration and UV/Oxidation technologies to remove the suspended solids and contaminants present in the supernatant from CDFs A, B, C, and D. 2. Develop a treatment system that is made up of several process trains (i.e., 350 gpm each) in order to maintain some flexibility in the design should the required treatment flow rate decrease due to the dredging technology utilized for the project.
Existing WTP Objectives	1. Upgrade the existing WTP's piping, instrumentation, and controls such that it can be operated as part of the new treatment systems. 2. Incorporate the existing system into the PLC for the new water treatment facility such that one operator can effectively operate all treatment trains.

5.0 TREATABILITY STUDIES

This section presents a summary of previous treatability studies conducted by USACE and ERM with representative Hot Spot sediment to support the design of the existing wastewater treatment process, and further wastewater treatability study work completed by Foster Wheeler with representative sediment for OU #1 to support the future wastewater treatment systems. In addition, a summary of the existing WTP operation during the Hot Spot removal action (OU #2) is presented.

Each of the treatability studies built upon the data generated by the previous studies. The purpose was to develop a treatment process which would effectively reduce the concentrations of PCBs and heavy metals to below the applicable discharge standards. Settleability and flocculation studies were conducted to determine the most effective method of reducing the total suspended solids/contaminant concentrations within the influent to the WTP. Filtration and UV/Oxidation tests were conducted to determine what processes could treat the supernatant to meet the discharge criteria.

5.1 Summary of Previous USACE Studies

The USACE conducted extensive studies on the upper estuary sediments to support the remedy. As part of these studies the USACE performed laboratory and bench-scale tests to gather technical data for predicting the behavior of the dredged sediments when placed in a confined disposal facility (CDF). The results of this "Engineering Feasibility Study" (EFS) are presented in a series of twelve reports prepared by the USACE's Waterways Experiment Station (WES) and New England Division (NED). The pertinent results from those reports are presented below.

5.1.1 Settleability

The USACE conducted modified water column tests for the Hot Spot sediments as part of the EFS. These tests indicated that removal of suspended solids in the wastewater will substantially reduce the metal and PCB contaminant levels in the water column. However, the dissolved PCB concentrations in the water column indicated that further treatment was required to remove PCB concentrations to acceptable levels prior to discharge back into the Harbor.

5.1.2 Flocculation/Filtration

Tests were performed by WES to evaluate the effectiveness of flocculation and filtration in reducing the PCB concentration in the supernatant. WES evaluated the use of a synthetic polymer (Magnifloc 1596C) and the results indicated that the polymer might be effective in reducing the PCB concentrations in the supernatant. However, WES did not evaluate the use of inorganic coagulants such as alum or lime.

5.1.3 Carbon Adsorption/UV Oxidation

A pilot scale activated carbon adsorption system and an ultraviolet (UV)/oxidation (hydrogen peroxide) system were evaluated. Activated carbon adsorption isotherms generated by WES for PCBs during the pilot scale studies demonstrated the effectiveness of activated carbon for the removal of soluble PCBs. The pilot scale UV/oxidation system also indicated effective destruction of soluble PCBs. However, overall PCB removal efficiencies for both of these systems were poor. The performance of both of these processes in the pilot scale studies were hindered by the elevated suspended solids concentrations of the wastewater. The elevated suspended solids (with associated adsorbed PCBs) allowed dissolved PCBs to pass untreated with the particulate matter.

5.2 Summary of Previous ERM Studies

Based on the results of the USACE EFS, ERM conducted additional treatability studies to develop a design basis for a wastewater treatment system which would meet the discharge limits established for OU #2 (see Table 2-1). These studies which were performed with representative Hot Spot sediment included evaluating sediment settling, flocculation, filtration, carbon adsorption, and UV oxidation systems. The results of the ERM studies are summarized in the following sections.

5.2.1 Settleability

Based on the treatability studies conducted by ERM (Appendix A), the following design parameters were developed for the existing WTP:

5.2.1.1 Primary Settling – Cell #1

It was determined that the dredged materials will settle within six (6) hours to a minimum supernatant suspended solids concentration of approximately 250 mg/l. The solids that settle will separate with a clean interface. Solids carry over from the settled sediments should not represent a significant problem, provided the overflow weir is designed to minimize entrance velocities.

In addition, the treatability studies indicated that floating oil and debris will form at the surface of the wastewater. During the studies a sheen of oil and other debris (leaves, etc.) were present. The results of analysis performed during parallel studies by USACE-NED/WES indicated this oily sheen has elevated concentrations of PCBs.

5.2.1.2 Equalization – Cell #2

Wastewater entering the equalization tank (Cell #2) will, based on the treatability studies, have a suspended solids concentration of 250 to 600 mg/l.

5.2.1.3 Secondary Settling – Cell #3

The treatability study indicated that the secondary settling cell (Cell #3) should have a minimum 15 minutes residence time. With this minimum detention time the secondary clarifier could achieve very low suspended solids concentrations of below 10 mg/l.

5.2.2 Flocculation/Filtration

5.2.2.1 Flocculation

Several polymers and flocculants were evaluated for suspended solids removal. These included Cat-Floc TS (Calgon Corporation), Magnifloc (American Cyanamid), Alum, Ferric Chloride, Lime and Ferrous Sulfate. Based on these treatability studies, ERM determined that the suspended solids within the supernatant settled out quickly with the addition of 25 mg/l of Alum. The TSS of the supernatant was reduced to approximately 5 mg/l. The results of these treatability studies are presented in Appendix A.

5.2.2.2 Filtration

Filtration analyses were designed to simulate sand filter and microfilter effectiveness in reducing the solids concentration of the supernatant. Samples were dosed with the appropriate concentration of

flocculant and then allowed to settle. The supernatant samples were then filtered through 10 and 2.5 micron filters. The test results indicated that a coarse filter (i.e., 10 micron) would be necessary prior to the polishing filter (2.5 micron) in order to minimize premature fouling of the filter. A coarse filter would prolong the period of time required between polishing filter changeouts.

5.2.3 Carbon Adsorption/UV Oxidation

UV/Oxidation design tests were performed by Calgon Corporation (formerly Peroxidation Systems, Inc.) on supernatant that was flocculated and filtered through a 2.5 micron filter. The treatability study results, which are presented in Appendix B, indicated that UV/Oxidation was capable of reducing the total PCB concentration in the wastewater to below the detection limit of 0.25 ppb. In addition, the study indicated that pretreatment to control iron concentrations would be required.

5.3 Operable Unit #1 (Hot Spot Sediments) WTP Operation Summary

From April 1994 to September 1995, the existing WTP treated approximately xx million gallons of supernatant from CDF Cell #1. The WTP operated as designed, however, in order to increase the changeout period for the polishing filters, the filter size was increased from 2.5 microns to 7-10 microns.

During the treatment operations, the PCB concentration in the effluent was consistently below the detection limit of 0.25 ug/l. However, there were several exceedances of the daily discharge limit for chromium (12.8 ppb – 2 exceedances), Copper (14.9 ppb – 5 exceedances) and lead (8.5 ppb - 6 exceedances). Only a few influent samples were taken during the hot spot WTP operations so the treatment efficiency cannot be easily determined. A summary of the analytical results from the hot spot operations is presented in Appendix C.

5.4 Foster Wheeler Treatability Studies

Two pre-design treatability studies were conducted prior to beginning water treatment plant design activities. Both treatability studies were conducted with sediments representative of OU #1. The first was to bench test samples of the supernatant following initial settling and flocculation for PCB destruction by the Calgon Carbon UV/Oxidation process. The second was to characterize the anticipated treatment plant influent following dredged sediment discharge to the CDF, initial settling and flocculation. The objectives of these pre-design treatability tests were to 1) estimate the expected influent contamination for the WTP during dredging under OU #1; 2) evaluate if the WTP is capable of meeting the new discharge standards as compared to the OU #2 standards that the existing WTP was designed for based on expected influent concentrations; and 3) estimate achievable effluent concentrations for PCBs and metals for the existing WTP process.

In addition to these two pre-design treatability studies, column settling was conducted at various slurry concentrations in order to simulate the different dredging methods, jar tests were conducted to evaluate the effectiveness of alum addition to accelerate the settleability of the suspended solids and several performance tests were conducted with the existing WTP. A summary of each of the Foster Wheeler treatability studies is provided in the following sections. Details of each test are provided in Appendix D.

5.4.1 Performance Testing of Existing WTP

In April and May 1999 several performance tests were conducted on the existing WTP using wastewater removed from CDF Cell #1. The purpose of these tests was to determine if the existing treatment system would be capable of treating the water removed from the Hot Spot sediments to the new monthly average discharge limits established for OU #1 (Table 3-1). The performance tests evaluated the effectiveness of the treatment plant as designed, as well as without the flocculation step. The results of these performance tests are presented in Appendix D.

The analytical results indicate that the existing system is not capable of reducing the total PCB concentration of the wastewater associated with the hot spot sediment to below the monthly average concentration of 0.455 ppb. Due to the presence of fine suspended particles within the wastewater, the UV/Oxidation system is only able to achieve a PCB concentration of approximately 0.5 ppb with the water removed from CDF Cell #1. However, it should be noted that the water associated with the Hot Spot sediment is anticipated to be significantly different from the water generated during OU #1 dredging activities. The Hot Spot sediments contain PCB concentrations in excess of 10,000 ppm while the OU #1 sediment will average less than 100 ppb. In addition, the Hot Spot sediments have been stored in CDF Cell #1 for over 4 years and the contaminants have likely leached out as a result of flushing with fresh water precipitation and bioactivity.

[The results of the Foster Wheeler treatability results will indicate if the results of the Performance Tests are in fact what the existing treatment process (flocculation/filtration/UV/Oxidation) is capable of achieving.]

5.4.2 UV/Oxidation

The existing WTP was able to consistently meet the monthly average discharge standard of 0.71 ppb total PCBs during the hot spot removal action. All the effluent samples collected from the existing WTP were consistently below the detection limit of 0.25 ppb. However, since the discharge standard for OU#1 is lower at 0.455 ppb total PCBs and the concentration of PCBs in the sediment will likely be at least 2 orders of magnitude less than the hot spots material (~100 ppm vs. >10,000 ppm), additional UV/Oxidation testing was conducted to determine its applicability in meeting the new discharge requirements.

A 5 % (by weight) slurry of sediment was mixed in an 85-gallon drum and then allowed to settle for approximately 24 hours. After settling, the supernatant was transferred to a second drum and 70 mg/l (ppm) alum was added to flocculate the remaining suspended solids. The flocculated supernatant was then allowed to settle for an additional 24 hours. In order to simulate the wastewater passing through cartridge filters the supernatant was pumped through a 10-micron in-line filter using a peristaltic pump. Approximately 30 gallons of the filtered supernatant was then shipped to Calgon Corporations UV/Oxidation testing facility in Toronto, Canada.

[Water sample was shipped to Calgon Corporation on November 11, 1999 and Results/Conclusions to be provided once testing is completed. Preliminary results are presented in Appendix B.]

The results of this UV/Oxidation treatability study as well as the treatability study conducted in May 1999 as part of the performance testing for T.O. #15 are presented in Appendix B.

5.4.3 Influent Characterization

Similar to the UV/Oxidation bench scale testing, a 5% slurry was prepared and then allowed to settle. The supernatant was sampled, then transferred to a second drum where 70 mg/l alum was added. The flocculated water was then allowed to settle for another 24 hours prior to being sampled for analysis.

[Testing was competed on November 11, 1999 and Results/Conclusions will be provided in a letter report once analytical data is received.]

The results of the influent treatability study are presented in Appendix D.

5.4.4 Column Settling Tests

[Summary of results/conclusions from column settling tests conducted for the CDF design will be presented once testing is completed.]

The results of the column settling tests are presented in Appendix D.

5.4.5 Jar Testing

[Testing was completed on November 11, 1999 and Results/Conclusions to be provided in letter report. Initial results indicate that the addition of alum to the initially settled water from the CDFs will significantly reduce the TSS. Preliminary field test results indicate that the TSS can be reduced from 150 ppm to 20 ppm.]

6.0 DREDGING TECHNOLOGIES

6.1 Description

The dredging technology(ies) selected for sediment removal will be based on the Dredge Technology Evaluation and Pre-Design Field Testing to be conducted in the spring 2000. The two dredging technologies to be evaluated include (1) Normrock Industries – *Amphibex* Amphibious Excavator and (2) Bean Technical Excavation Corporation (TEC) – Hydraulic Excavator, Slurry Processing Unit (SPU).

6.2 Sediment/Water Balances

[The sediment and water balances developed for the Water Treatment Plant Study (March 1999) will be revised to reflect the dredging technology(ies) selected. In addition, the mass balances will be recalculated in percent solids by weight and volume. The revised mass balances will be included as an appendix (Appendix E) to the BD/DA. Appendix E presently contains the mass balance developed for the water treatment plant study (Foster Wheeler, March 1999).]

7.0 PROCESS DESCRIPTION

7.1 Overview

Selection of the most effective treatment system size and location requires a thorough understanding of the water generation rates. The flow rate of the seawater to be decanted and treated from each CDF is dependent on several variables which include: 1) the number of dredges utilized, 2) the dredge pumping rate (gallons per minute), 3) the total dredge time (hours/day), and 4) the solids content (%) of the dredged material. Since the dredging plan for the project has not yet been prepared, any one of these variables could change thereby affecting the flow rate of the wastewater that needs to be treated prior to discharge. However, based on the conclusions of the Water Treatment Plant Study (March 1999) the following assumption have been made for the WTP BD/DA:

- Two Cutterhead dredges will be utilized to remove sediment
- Dredge pumping rate will be 2,100 gpm per dredge
- Each dredge will only operate for two 4 hour shifts/day for a total of 16 hours of dredging per day
- Dredging will be conducted 6 days per week
- The % solids of the dredged material will average 5% by volume
- Water treatment will be conducted 24 hours/day, 7 days per week

Utilizing the above assumptions, the anticipated flow rate of wastewater to be treated is approximately 1,140 gpm. Therefore, if the existing WTP is utilized, approximately 800 gpm of additional treatment capacity is necessary.

7.2 Mass Balance

A summary of the information utilized to develop the design flow rate of 1,174 gpm for the water treatment system is provided below and a schematic is provided in Figure 7-1. Detail spreadsheets supporting this information along with a more detailed sediment/water mass balance are provided in Appendix E. **[These spreadsheets will be revised following selection of dredging technology(ies).]**

<u>In-Situ Sediment Conditions</u>

- Sediment water content = 1.2
- % solids (by volume) = 25.9
- % solids (by weight) = 46
- Sediment/solids specific gravity = 2.5
- Seawater specific gravity = 1.025
- In-situ Sediment specific gravity = 1.4

<u>Dredging</u>

- Two dredges with 10 inch discharge piping will be utilized
- Dredge rate is 2,100 gpm per dredge
- Each dredge will operate for two 4 hour shifts per day for a total of 16 hours of dredging per day
- Solids content of dredged slurry = 2.15% (by volume), 5.1% (by weight)
- Dredge Production Rate (in-situ) = 52 yd^3 /hour
- Solids discharge rate (at CDF) = 13.5 yd^3 /hour

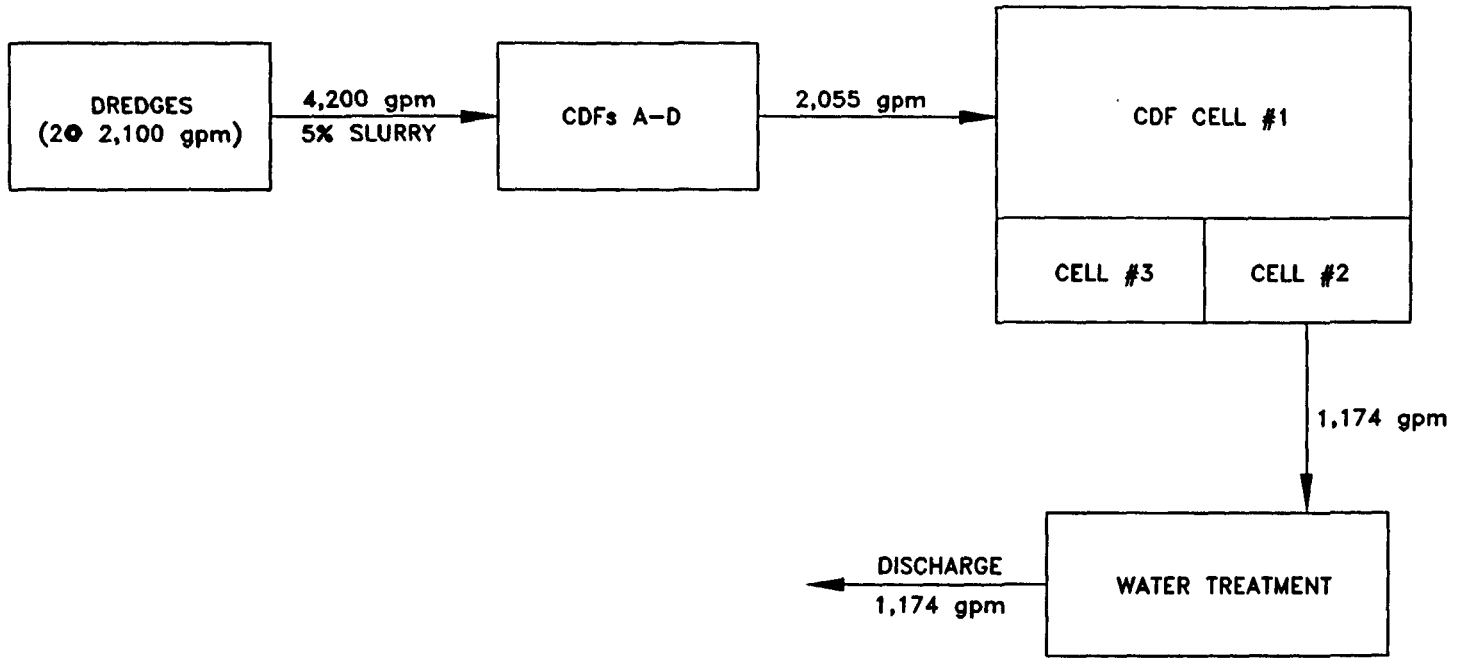

FIGURE 7-1

NEW BEDFORD HARBOR SUPERFUND PROJECT
NEW BEDFORD, MASSACHUSETTS

WASTEWATER FLOW RATE SCHEMATIC

NOT TO SCALE

CAD FILE: NBPROCES.DWG

- Dredging will be conducted 6 days per week
- Supernatant flow rate to CDF Cell #1 = 2,055 gpm

Water Treatment

- Water treatment systems will operate 24 hours/day, seven days per week
- It is assumed all water is readily available for treatment
- Existing WTP capacity = 350 gpm
- Additional capacity required = 824 gpm
- Retention time within CDF Cell #1 = 4.5 million gallons/1,174 gpm = 64 hours

7.3 Existing WTP

The existing 350 gpm water treatment system was designed to treat wastewater generated during the removal of approximately 10,000 yd^3 of Hot Spot sediment (>10,000 ppm PCBs) from the Upper Estuary. The existing WTP was designed to remove PCB and heavy metal contaminated suspended solids from decanted wastewater generated by the dredging operation.

The dredging operations were initially expected to average about 3.5 to 4.0 hours per day and pump a slurry containing 2 to 5% solids at 2,100 gpm. Based on the estimated volumes, the dredging operations were expected to last for approximately 80 days. However, the existing WTP actually ran for approximately 17 months and only had 13 exceedances (Appendix C) for heavy metals during that period.

7.3.1 Description of Existing Treatment System

The existing water treatment system which was designed by ERM (Final Design Analysis, 11/91) consists of an initial settling basin (CDF Cell #1), an equalization basin (CDF Cell #2), flocculation/ physical/chemical treatment, secondary settling (CDF Cell #3), filtration, and UV/ Oxidation. The process flow diagram for the existing WTP is presented in Drawing 400E-101.

The P&IDs for the existing WTP are presented in Drawings 400E-111 and 400E-112. It should be noted that the design drawings for the existing WTP include details for the incineration process that was not constructed.

7.3.1.1 Initial Settling (CDF Cell #1)

CDF Cell #1 received water and sediment pumped from the hydraulic cutterhead dredge during the Hot Spot removal operations. The cell was designed to provide sufficient hydraulic detention time (greater than 8 hours) for the majority of the heavier sediments to settle from the dredged slurry. CDF Cell #1 was also designed to allow floatable debris and oil to separate from the dredged material. CDF Cell #1 has a capacity of approximately 5 million gallons.

Flow from CDF Cell #1 into CDF Cell #2 is monitored and controlled by an adjustable weir. A manually adjusted slide gate (FCV-1) at the weir allows the sediment supernatant from CDF Cell #1 to overflow into CDF Cell #2 (equalization basin).

7.3.1.2 Equalization Basin (CDF Cell #2)

CDF Cell #2 is used to equalize the flows from CDF Cell #1. Wastewater flows from CDF Cell #1 to CDF Cell #2 by gravity. CDF Cell #2 has a volume of approximately 555,000 gallons and was design to equal the volume of water generated by an average day of dredging operations during the hot spot removal action (504,000 gallons).

The equalized water is then pumped from CDF Cell #2 to the water treatment plant at an average rate of up to 350 gpm using flocculation feed pumps P-100A or P-100B. These pumps are operated with one pump on line and the other pump in stand by mode.

Pumps P-100A/B may be started locally or from the main control panel in the treatment building. The flow rate from these pumps is controlled manually with a butterfly valve (V-500). The flow rate is indicated on the main control panel and on the flow transmitter FIT-2 mounted near V-500.

7.3.1.3 Flocculation/Chemical/Physical Treatment

In order to enhance the settling time of the suspended solids present in the wastewater stream, alum is introduced prior to the wastewater stream entering the mixing and flocculation tanks (T-100 A and T-100B). The feed pumps for these systems are adjusted manually to provide the optimal dosage for the selected process flow rate. A polymer addition system is also present but was not utilized during the OU #2 operations.

7.3.1.4 Secondary Settling (CDF Cell #3)

From the flocculation tanks the water flows by gravity to CDF Cell #3 where the majority of the suspended solids settle out. CDF Cell #3 has a volume of approximately 420,000 gallons, which is sufficient for solids storage and hydraulic retention time for the 350 gpm system.

The wastewater within CDF Cell #3 overflows a v-notched weir placed along the wall dividing CDF Cells #1 and #3 and into a collection sump. From the CDF Cell #3 sump, the wastewater is pumped (P-102A/B) at an average flow rate of up to 350 gpm through the sand filter and to the polishing filter feed sump (TK-101). As with flocculation feed pumps, the flow rate is manually controlled with a butterfly valve (V-501). The flow rate from CDF Cell #3 is indicated on the flow recorder mounted on the main control panel and on the flow transmitter (FIT-8) mounted near V-501.

After settling, hydrogen peroxide is added to the wastewater. The hydrogen peroxide skid mounted system includes a hydrogen peroxide storage tank and metering pumps. An in-line static mixer is provided to ensure proper mixing of the hydrogen peroxide and wastewater. Hydrogen peroxide is added to remove excess iron that may be present in the wastewater stream prior to the UV/Oxidation system. Precipitation of iron would adversely affect the operation of the UV/Oxidation system by coating the quartz tubes. Hydrogen peroxide will oxidize the soluble iron in the wastewater stream to the ferric state. The iron will then be removed by filtration in the subsequent filtering operations described in the following section.

7.3.1.5 Filtration

After secondary settling in CDF Cell #3, the wastewater is filtered prior to treatment in the UV/Oxidation unit. Filtration is conducted by utilizing two filter systems in series. The first unit is a continuous backwash sand filter (Dynasand). This coarse sand filter is designed to remove large

(> 10 microns) suspended solids and metal oxides not removed in the settling process. The second unit is a polishing cartridge filter system that utilizes either 5 or 7 micron filters.

The Dynasand filter (manufactured by Parkson Corporation) utilizes silica sand and is 9 feet in diameter with an equivalent filter area of 64 ft^2. At the design flow rate of 368 gpm the flow rate is 5.75 $gal/min/ft^2$. The unit is supplied with a compressor that airlifts the sand through the center of the unit to remove filtered particulate from the filter bed. The continuous backwash water from the sand filter is returned to the flocculation tank at a flow rate of up to 20 gpm.

The sand filter was also designed to reduce the concentration of iron in the wastewater stream to approximately 2 ppm. At this concentration, iron will not adversely affect the performance of the UV/oxidation system. The sand filter also acts as a coarse filter to remove particles that may clog the polishing filters. A continuous backwash filter was selected to eliminate the need for backwash storage and feed systems.

The effluent from the sand filter is collected in a 1,750 gallon polishing filter sump (TK-101). From this sump pumps P-103A/B transfer water through the cartridge filters and UV/oxidation system. The polishing filter feed pumps are started manually from the main control panel and the flow rate is controlled by FCV-9. The polishing filters were designed to remove particles down to 2.5 microns in order to allow the UV/Oxidation system to remove the remaining soluble and particulate PCBs efficiently. However, in order to prolong the filter cartridge operational life, the parallel polishing filter system currently only uses 5 or 7 micron cartridge filters. When the pressure drop through the on-line filter exceeds 50 psi, the valves are manually repositioned to put the clean filter on-line and the used filter off-line for changeout.

7.2.1.6 UV/Oxidation

The UV/Oxidation system (Calgon Corporation, previously Peroxidation, Inc.) was designed to reduce the level of PCBs in the wastewater to discharge levels established for OU#2 (0.71 ppb). The unit is capable of treating 350 gpm of wastewater with concentrations of PCBs of up to 350 ppb. Although treatability studies indicated that a detention time of 1.4 minutes is required to oxidize the PCBs, the UV/Oxidation unit has a minimum detention time of 3 minutes. During the Hot Spot dredging activities (OU #2) the UV/Oxidation system was able to consistently reduce the PCB concentration in the wastewater to less than 0.25 ppb. This data is presented in Appendix B.

7.3.2 Instrumentation and Controls

A brief description of the process instrumentation and controls for the existing WTP are presented in this section. The piping and instrumentation diagrams (P&IDs) for the existing WTP are presented in Drawings 400E-111 and 400E-112.

7.3.2.1 Flocculation Feed Pumps (P-100A/B, located in CDF Cell #2)

Pump controls are float activated and automatically alternate the pumps upon subsequent start up when low level set point is reached. Pumps P-100A/B can be started locally or from the main control panel in the treatment building. The flow rate from the flocculation feed pumps is controlled manually with a butterfly valve (V-500) located within the treatment building. The flow rate is indicated on the main control panel and on the flow transmitter (FIT-2) mounted adjacent to V-500.

7.3.2.2 Alum Feed Pumps (P-101A/B)

The alum feed pumps manually controlled diaphragm type metering pumps, with a flow rate of 0 to 8.0 gph. The selection of P-101A or B is made from the control panel. The rate of alum addition is manually controlled at the pump.

7.3.2.3 Filter Feed Pumps (P-102A/B, located in CDF Cell #3)

Pump controls are float actuated and automatically alternate the pumps upon subsequent start up when low level set point is reached. Pumps P-102A/B can be started locally or from the main control panel in the treatment building. The flow rate from the filter feed pumps is controlled manually with a butterfly valve (V-501) located within the treatment building. The flow rate is indicated on the main control panel and on a flow transmitter (FIT-8) mounted adjacent to V-501.

7.3.2.4 Turbidity Meter (AE7)

The turbidity meter, which is, located near V-501 and flow transmitter FIT-8 monitors the turbidity of the effluent from CDF Cell #3. The turbidity is indicated on the turbidity recorder #1, mounted on the main control panel and also locally on the meter itself.

7.3.2.5 Polishing Filter Feed Pumps (P-103A/B)

The polishing filter feed pumps are started manually from the main control panel. The flow rate from Pumps P-103A/B is automatically controlled with a flow control valve (FCV-9).

7.3.2.6 Polishing Filter Flow Control Valve (FCV-9)

Flow control valve FCV-9 controls the rate of flow to the polishing filters. It is a motor operated valve (MOV) controllable at the main control panel. In "Automatic" the valve is controlled by the signal from the effluent discharge flow meter (FE-12) to maintain the flow set point of 350 gpm. In "Manual" the valve is hand controlled by up or down buttons in the control panel to increase or decrease flow.

7.3.2.7 Turbidity Meter (AIT-10)

Effluent from the polishing filter passes through a turbidity meter where it determines if the water is clean enough to allow for UV/Oxidation treatment. If the water exceeds the turbidity limit of 4.0 NTU, the flow control valve (FCV-10A) will automatically close to prevent effluent from discharging to the river and FCV-10B will open automatically to recycle into CDF Cell #1 until the turbidity clears.

7.3.2.8 UV/Oxidation System

The UV/Oxidation system is equipped with its own local control panel with the following Alarm Panel Indicators and Shutdown interlocks:

- Electrical Power Monitoring
- Low Water Flow (less than 160 gpm)
- High Oxidation Chamber Enclosure
- High Lamp Drive Enclosure Temperature
- Low Flow Peroxide System Failure
- High Pressure Relief Flow

- Moisture in the Lamp End Enclosure
- Reverser Valve Out of Position
- Oxidation Chamber Low Water Level
- Low Air Pressure

Any shutdown by the UV/Oxidation system controller requires a manual restart of the entire treatment system.

7.3.3 Proposed Process Modifications/Upgrades

While the same treatment system sequence will be utilized for the wastewaters generated during OU#1, due to the increased supernatant volume of up to 1,200 gpm, additional treatment system capacity will be required. The additional capacity will be provided with 3 new 350 gpm treatment systems constructed adjacent to the existing WTP.

Since CDF Cell #1 will be utilized as the flocculation basin, the process flow path of the existing WTP will be modified. The effluent wastewater from the equalization basin (CDF Cell #2) will be pumped directly to the sand filter rather than through the flocculation tanks and into CDF Cell #3.

After passing through the sand filter the water will be collected in the polishing filter sump where it will then be pumped through the cartridge filters, UV/Oxidation system and discharged to the harbor. In order to ease the filling of the hydrogen peroxide tank and supply the new WTPs, the existing hydrogen peroxide storage tank will be moved outside and placed between the two buildings. The volume will be sufficient to supply four treatment trains and will be sheltered from the weather.

In addition to the above piping modifications, either of the following two instrumentation and control revisions are recommended. These changes will enable the existing WTP to be less operator dependent and ensure that the UV/Oxidation system will not shut down due to a low flow condition.

7.3.3.1 Revision #1

a. Change existing manual control valve (V-500) to an automatic modulating valve with electric actuator and built in PID controller.

b. Install a new RF-Admittance type level transmitter in the polishing filter feed sump (TK-101) which will send a 4-20 mA signal to the new automatic modulating control valve (V-500) to maintain the desired level in the sump. The transmitter level probe will be installed in a two inch still well, for protection against splashing from water entering from the top of the sump.

c. Provide a re-circulating line with a pressure relief valve before valve V-500.

d. Change Polishing Filter (FF-101A/B) operation from manual to automatic so that when one filter becomes clogged, flow will automatically switch over to the other clean filter. Operation will be automated by installing a differential pressure switch across each filter and three-way divertor valve on intake side of the filter. A local control panel will be provided which will contain relays for the logic and a filter selection switch, high differential pressure alarm lights and a reset button for each filter. Control panel will send a signal to the plant PLC on high differential pressure alarm for monitoring. Once the filter is switched it will stay on second filter, until operator changes the filter cartridges and resets the alarm.

e. Change polishing filter feed control valve (FCV-9) and existing flow controller with a new PID flow controller for better loop tuning i.e. for better control of positioning of the valve based on the FIT –12 flow input signal.

f. Existing area 'C' WTP control system will sent following signals to the new plant control system for monitoring and alarm.

- UV Oxidizer shutdown alarm.
- Polishing Filter sump high-high alarm
- Polishing Filter F-101A high differential pressure alarm.
- Polishing Filter F-101B high differential pressure alarm.
- Flocculation feed pump P-100A/B run signal.
- Polishing Filter feed pump P-103A/B run signal

New plant control system will page plant operator via Auto dialer when any of the above alarm condition occur.

7.3.3.2 Revision #2

a. Change existing flocculation feed pumps P-100A/B motors to the motors which is listed for the variable speed duty.

b. Install variable speed drives for the floccilation feed pumps (P-100A/B).

c. Install a new RF-Admittance type level transmitter in the polishing filter feed sump (TK-101) which will send a 4-20 mA signal to the new automatic modulating control valve (V-500) to maintain the desired level in the sump. The transmitter level probe will be installed in a two inch still well, for protection against splashing from water entering from the top of the sump. A new level controller will also be mounted near TK-101 which will sent 4-20 mA signals to the variable speed drives of pump P-100A/B to control the speed, to maintain the desired level in the sump TK-101.

d. Change Polishing Filter (FF-101A/B) operation from manual to automatic so that when one filter becomes clogged, flow will automatically switch over to the other clean filter. Operation will be automated by installing a differential pressure switch across each filter and three-way divertor valve on intake side of the filter. A local control panel will be provided which will contain relays for the logic and a filter selection switch, high differential pressure alarm lights and a reset button for each filter. Control panel will send a signal to the plant PLC on high differential pressure alarm for monitoring. Once the filter is switched it will stay on second filter, until operator changes the filter cartridges and resets the alarm.

e. Change polishing filter feed control valve (FCV-9) and existing flow controller with a new PID flow controller for better loop tuning i.e. for better control of positioning of the valve based on the FIT –12 flow input signal.

f. Existing area 'C' WTP control system will sent following signals to the new plant control system for monitoring and alarm.

- UV Oxidizer shutdown alarm.
- Polishing Filter sump high-high alarm

- Polishing Filter F-101A high differential pressure alarm.
- Polishing Filter F-101B high differential pressure alarm.
- Flocculation feed pump P-100A/B run signal.
- Polishing Filter feed pump P-103A/B run signal

New plant control system will page plant operator via Auto dialer when any of the above alarm condition occur.

7.3.4 Costs to Upgrade Existing WTP

The piping changes have already been completed as part of the Performance Testing conducted in May 1999 as part of Task Order #15.

Costs associated with upgrading the existing WTP are provided in Appendix F.

7.3.5 Incorporation of Existing WTP into Future Treatment System

The future WTP will be utilized to treat up to 1,050 gpm. However, if the volume of wastewater increases such that the entire treatment capacity is necessary, the existing WTP will be used to reach the required treatment capacity of 1,174 gpm.

Control signals from the existing WTP will be sent to the new PLC system so that only one operator will be required to operate both WTPs.

The existing pumping system will be utilized for the existing WTP. New equipment will be purchased for the new WTP.

7.4 New Wastewater Treatment Systems

The additional treatment capacity needed to support the dredging activities for OU #1 will be provided with three (3) 350 gpm treatment systems installed in a pre-engineered building adjacent to the existing WTP. These process trains will be similar to the existing WTP in that they will consist of a filtration process to remove the majority of the suspended solids and a UV/Oxidation system to reduce the PCB concentration. The design will also attempt to combine portions of the treatment system in order to reduce the building footprint and capital costs. Processes which may be combined are filtration and tanks. The following is a description of the new treatment system.

7.4.1 Initial CDF Settling/Water Collection

Similar to the existing WTP system, initial settling of the dredged sediments will take place within the CDFs. Each CDF will have sufficient hydraulic detention time to allow the majority of the sediment to settle out of solution. Sumps with overflow weirs will be constructed within each of the CDFs that will allow the supernatant to be collected and then pumped to CDF Cell #1. Floating pipe similar to that utilized to transfer the dredged material will be used to transfer the supernatant water from CDFs A, B, and D.

7.4.2 Flocculation/Physical Treatment/Chemical Treatment

While the majority of solids will drop out of solution within the CDFs, the total suspended solids within the supernatant could be as high as 600 mg/l (ppm). Therefore, in order to accelerate the settling properties of the suspended solids alum will be introduced to the wastewater stream prior to discharge to CDF Cell #1. An in-line static mixer will be used to ensure adequate distribution of alum into the wastestream. Injection of alum will be at a rate determined through jar testing and will be controlled based on influent flow and turbidity. The alum will flocculate the fine suspended solids and enhance settling and filtration of the fine suspended solids. Solids which accumulate in CDF Cell #1 will be transferred to CDF C utilizing sludge pumps.

7.4.3 Secondary Settling

Following flocculation in CDFs A, B, C, or D, the wastewater will be discharged to CDF Cell #1 where the suspended solids remaining in the wastewater will be settled out. CDF Cell #1 has a volume of approximately 4.5 million gallons, which would result in a residence time of about 62 hours, based on a flow rate of 1,200 gpm.

In order to further reduce the suspended solids concentration in the supernatant, it may be advantageous to split CDF Cell #1 into two cells in order to enhance the settling of the suspended solids.

7.4.4 Equalization

Following secondary settling the wastewater will flow into CDF Cell #2 for equalization prior to entering the WTPs. The water will be pumped from CDF Cell #2 to the WTP using the existing pumps as well as new pumps to provide the required pumping capacity.

As part of the system upgrade, the current pump station and piping within CDF Cell #2 will have to be enlarged to accommodate the increased flow.

7.4.5 Filtration

After secondary settling and equalization the wastewater will be filtered prior to treatment in the UV/Oxidation system. The filtration system will be designed to remove suspended solids such that the turbidity to the UV/Oxidation system is less than 10 NTU.

[In addition to these filtration systems, a multimedia filter system will be evaluated. The performance, O&M requirements, and cost will be evaluated as part of the design effort.]

7.4.6 UV/Oxidation

The UV/Oxidation system will be the same as that installed in the existing WTP. Each process train will include a 350 gpm UV/Oxidation system and associated control panel.

[The ability of this system to achieve the monthly average PCB discharge requirement of 0.065 ug/l per Aroclor will be determined during the Calgon bench scale design study.]

7.4.7 Treatment Plant Control System

7.4.7.1 Description of the Control System Architecture

The principal means of control of the treatment system will be a microprocessor based Programmable Logic Controller (PLC). The PLC combine with "Human Machine Interface" (HMI), which includes video display, personal computer, keyboard and printer will provide the plant with complete control of all vital plant operation functions. The system video display graphics indicate a real time and continuously updates set of all parameters, possibly requiring operator intervention.

All automated function of the system will be controlled by PLC; computer interface between operator and plant control will be through HMI system running Genesis for Windows or equivalent software.

The Genesis software will provide graphic display of the plant and controls, alarming, reporting, data acquisition and historizing functions.

Auto dialer will be used to page the operator, to notify any alarm conditions.

7.4.7.2 Graphic Screens

The following graphic screens will be provided for operator interface.

- **Process Main Screen.** This screen will appear initially at system start-up. The main screen will give a graphic overview of the entire process, with the key devices shown, and give operator the ability to go to any other screen, using on screen pushbuttons.

- **Process Screens.** A graphic will be provided, based on each piping and instrumentation diagram (PID) drawing pertinent to the process. These screens will provide the operator the ability to control the plant operation and view all critical parameters and alarms.

7.4.7.3 Alarm and Event System

System events that require alarming are processed by the PLC. Alarms are recorded and annunciated locally in the control room through Genesis for Window's AlarmWorkX.

Alarms will be categorized by priority; Alarm designated, as normal priority will annunciate at the computer (using computer's sound and video system). Each alarm is logged to disk. Alarms designated as High Priority Alarms will annunciate and log as described above, and will transmitted via phone line to operator via auto- dialer. The auto-dialer will have sixteen inputs for High Priority Alarms.

Each alarm occurrence (alarms, acknowledge, and clear) will also be logged to a file. System events such as operator change from manual to automatic operation of the equipment, motor, pump, blower start or stop will be also logged in to the same file.

Alarm and Event summary screen will be provided, which will include time and date when alarm and/or event occurred, point identification and description.

7.4.7.4 Data Logging and Report

Selected analog process points will be periodically stored on the computer hard disk. Data collection will be average over the five minutes (and adjustable through programming) and will be stored daily in history file format.

The computer will automatically print out the selected daily report. The will contain site name, address, date, time and will be presented using the layout and parameters provided in the specification.

7.4.7.5 Motor Control

Each pump motor will be controlled from local Hand-Off-Auto selector switch located on the Motor Control Center (MCC), IN 'Hand' position it will be controlled locally and in 'Auto' position it will be controlled from PLC as follows:

> An "AUTO-MANUAL" control station/selector will be included for each motor, accessible from a graphic screen. This soft selector switch will allow positioning the motor's software control in either MANUAL mode or AUTOMATIC mode to determine if motor will start and stop automatically or by operator action.

Graphic representation of each pump, blower or mixer will reflect the run status of the motor with color. When the motor is running, the graphic object will be green, and when motor is off, the graphic object will be red.

7.5 Monitoring Requirements

The wastewater will be monitored at various points along the treatment process to ensure that the system is functioning properly and that the discharge requirements are being achieved. The sample points (identified in Drawing C-4) and analytical parameters for each sample point are presented below in Table 7-1.

Table 7-1
Water Treatment Process Monitoring Requirements

Sample Point	Description	TSS	PCBs	Cadmium	Chromium	Copper	Lead
2	Initial Settling Effluent	X	X	X	X	X	X
4	Clarifier Effluent	X					
5	Equalization Effluent	X	X	X	X	X	X
7	Sand Filter Effluent	X					
8	Polishing Filter Effluent	X					
10	UV/Oxidation Effluent	X	X	X	X	X	X

The tests will be performed on a daily basis for the first week, or until the system operating parameters have been optimized, and then on a weekly basis for the remainder of time the treatment process is operating. However, the treatment system may require more frequent monitoring to ensure compliance with the effluent limits and to maintain proper operation of the system.

A composite sampler will monitor the effluent from the treatment system. The sampler will take 48-hour composite samples to monitor performance and ensure the system is meeting the effluent limits. To ensure proper performance of the treatment system, the effluent wastewater will be collected and analyzed daily for the first week of operation. If, based on the first week of analyses, the wastewater treatment system is operating properly (i.e., the system has not exceeded any of the effluent limits for seven consecutive days) required sample analysis will be reduced to once per week. However, if a sample analysis exceeds the effluent limits, monitoring frequency will again be daily, until five consecutive samples are within the appropriate limits.

The appropriate limits for the effluent water are provided in Table 3-1.

7.6 Acquisition Strategy

In order for the design of the water treatment systems to proceed in a cost effective manner it is necessary in the early stages of the design to determine if the construction is to be self performed by Foster Wheeler or issued for bid to subcontractors with extensive experience in water treatment plant equipment and construction. As indicated in the Work Plan (Section 3.5.1 Make/Buy Analysis), a set of guidelines has been developed to assist in determining the most cost-effective approach.

All work elements associated with the construction of the water treatment facility will be completed through a Work Package approach with Foster Wheeler acting as the General Contractor. The work packages for the construction will include the technical specifications and drawings prepared for the WTP design submittal.

A preliminary list of the work packages to be developed is presented in Table 7-2. Foster Wheeler will attempt to minimize the number of work packages to be developed by combining as many of the construction activities as possible. However, due to the aggressive schedule the work packages will need to be developed in parallel with the final design. Therefore, it may not be feasible to develop all comprehensive work packages prior to the completion of the final design. However, the work packages developed at the 75% Design phase should be sufficiently detailed to procure qualified subcontractors.

Table 7-2
Water Treatment Facility Work Packages

Work Package	Description
1	Pre-Engineered Building: excavation, concrete, backfill materials, pre-engineered building(s), foundation construction, sump construction, exhaust fans
2	Mechanical Subcontractor: Includes process piping and equipment installation, instrumentation and controls, floating pipe, process tanks (polishing filter sumps, hydrogen peroxide storage tank), alum/polymer chemical feed systems, HVAC
3	Electrical Subcontractor: Includes site utilities, process wiring, lighting, security system, fire alarm
4	Filtration Systems: Includes sand filter, cartridge filters, air compressors
5	UV/Oxidation System and hydrogen peroxide feed system
6	Pumps: Includes all process pumps
7	Motor Control Center and Programmable Logic Controller
8	Operation and Maintenance of treatment System
9	Laboratory Analysis for effluent monitoring

In order to meet the present construction schedule for the WTPs it will be necessary to break out specific portions to be developed prior to submittal of the 100% design. These work packages would include the pre-engineered building and any long lead time items. Presently the long lead time equipment includes the UV/Oxidation system, filtration system and the motor control center.

8.0 PRELIMINARY DRAWINGS, SPECIFICATIONS, AND EQUIPMENT DESCRIPTION

The following is a list of specifications and equipment descriptions utilized during the design of the water treatment system. The design calculations which support the selected equipment is provided in Appendix G.

8.1 Preliminary Drawings

[In order to minimize cost and schedule of the 30% WTP design submittal, the majority of the drawings included with the BD/DA are marked up design drawings from ERM's Design Analysis Report (1991). The purpose of the marked up drawings is to present the type and level of detail to be included in future BD/DA drawing submittals. All the drawings to be present in the 90% WTP design submittal will be developed in Microstation by Foster Wheeler.]

8.2 Applicable Specifications, Codes, and References

The following design specification sections may be referenced to obtain specific details on the water treatment system design at the New Bedford Harbor Superfund site. A complete list of the technical specifications is provided in Appendix H.

Topic	Specification

The codes, standards, and references applicable to the water treatment system design criteria can be found in the references listed above.

8.3 CDF Transfer Pumping System

The following sections provide the design criteria for the equipment/structures associated with transferring the supernatant from the CDFs to CDF Cell #1. These include the CDF transfer pumps, conveyance piping, and transfer sump.

8.3.1 CDF Transfer Pumps

Pump Type:
Required Quantity:
Motor:
Flow Rate:
Discharge Head:
Materials of Construction:
Other Materials Included:

8.3.2 CDF Conveyance Piping

Materials of Construction:
Diameter:
Length:
Flow from Transfer Pumps:
Operating Head Pressure:

8.3.3 CDF Transfer Sump

Required Volume:
Materials of Construction:
Depth:

8.4 Initial Settling Basin

8.4.1 Chemical Addition System

8.5 Equalization Basin

8.5.1 Transfer Pumps

Pump Type:
Required Quantity:
Motor:
Flow Rate:
Discharge Head:
Materials of Construction:
Other Materials Included:

8.5.2 Equalization Transfer Sump

Required Volume:
Materials of Construction:
Depth:

8.6 Water Treatment Systems

The following sections provide the design criteria for the water treatment equipment. These criteria are based on design calculations provided in Appendix G.

8.6.1 Pumps

Pump Type:
Required Quantity:
Motor:
Flow Rate:
Discharge Head:

Materials of Construction:
Other Materials Included:

8.6.2 Filtration

Type:
Filtration Media:
Flow Rate:
Backwash Flow Rate:
Pressure Differential:
Materials of Construction:
Other Materials Included:

8.6.3 UV/Oxidation System

Type:
Number of Lamps:
Flow Rate:
Materials of Construction:
Other Materials Included:

8.6.4 Hydrogen Peroxide Feed System

Type:
Feed Pump Type:
Output Range:
Storage Tank Capacity:
Storage Tank Material of Construction:

8.6.5 Filtration Feed Sump

Volume:
Diameter:
Materials of Construction:

APPENDIX A

ERM Treatability Study Results (November 1991)

FOSTER WHEELER ENVIRONMENTAL CORPORATION

December 2, 1999
TC99-017-466
Response Required

Robert Hunt
Project Manager
U.S. Army Corps of Engineers
New England District
696 Virginia Road
Concord, MA 01742-2751

Subject: USACE CONTRACT NO. DACW33-94-D-0002
TOTAL ENVIRONMENTAL RESTORATION CONTRACT (TERC)
TASK ORDER NO. 0017 - NEW BEDFORD SUPERFUND SITE OU #1
30% DESIGN SUBMITTAL FOR THE WATER TREATMENT FACILITY AT CDF C

Dear Mr. Hunt:

Foster Wheeler Environmental Corporation is pleased to submit the conceptual 30% design for the water treatment facility at CDF C. The 30% design is based on the ERM design for the existing water treatment system, historical operational data, treatability studies, and discussions with USACE-NAE engineering staff.

We look forward to your comments on this submittal by December 23, 1999. If you have any questions, please call me at (617) 457-8259 or Allen Ikalainen at (617) 457-8234.

Sincerely,

Allen J. Ikalainen for

George M. Willant
Chief Project Manager

Enclosure: TD99-220

cc: D. Dickerson (EPA) (2)
C. Catri (EPA) (1)
M. Beaudoin (USACE) (2)
R. Godfrey (USACE) (4)
P. Craffey (MADEP) (1)

File: PM 1.1 C/L
TO #17 15.5.1

470 ATLANTIC AVENUE, BOSTON, MA 02210
TEL: 617-457-8200 FAX: 617-457-8498

APPENDIX A

ERM TREATABILITY STUDY

1.0 ERM TREATABILITY STUDY

Previous work performed by the USACE identified a number of areas to be investigated further to provide necessary design information. These areas included:

- Would an inorganic chemical be more efficient at removing suspended solids?
- What would be the settling characteristics of this material?
- Could the suspended solids concentrations of the wastewater be better controlled?
- Would the performance of the carbon adsorption and UV/oxidation systems be improved with better suspended solids control?
- Which polishing system (carbon adsorption or UV/oxidation) would be more effective at achieving effluent goals?

This appendix details the procedures and methods that ERM used to perform the additional treatability studies required to address these questions. The studies evaluated sediment settling, flocculation, filtration, carbon adsorption and UV/oxidation systems to further develop detailed design requirements and allow the project to proceed in a timely fashion.

Although this study addressed only the treatability of the CDF elutriate, the results are applicable to the treatability of filtrate flows from sediment dewatering, since these wastewaters have similar characteristics. Incinerator blowdown may be treated separately by an evaporation

system which will be included as part of the incinerator and air pollution control system or will be treated with the treatment system separately from dredging flows.

2.0 OVERVIEW

The ERM Treatability Study involved a series of tests on sediment and water samples dredged by the USACE from the Hot Spot area. Sediment and water samples were collected (between December 17 and 20, 1990) by Normendeau Associates, subcontractor to USACE-NED, and forwarded to ERM's treatability laboratory in Exton, Pennsylvania. The approximate sample collection locations are shown by Figure A-1. Eight 30-gallon drums of sediment and water were forwarded to ERM. The drums were identified XY-Z by Normendeau Associates in the field, where X designates the area collected from, Y designates the sample and Z designates the number of the drum collected at that spot. Drums not used for the treatability study were used for the test burn. Tests were performed independently for each proposed wastewater treatment system unit process to determine optimum design parameters and establish operating conditions.

The treatability study was performed in two phases. The first phase consisted of settling, flocculation and filtration testing. This phase was performed from January 7 through 11, 1991 and focused on removing solids from the wastewater. The second phase focused on the dissolved PCBs. The second phase was performed from January 28 through 30, 1991, after the Phase 1 analytical data was reviewed. Review of the analytical data allowed the second phase of testing to evaluate subsequent treatment units using the most effective method of removing solids as determined in the Phase 1 studies. The second phase testing also verified data generated during the first phase.

The suspended solids contain a substantial portion of the PCBs and heavy metals in the wastewater. The subsequent treatment units (i.e., carbon adsorption or UV/oxidation) are more effective in removing dissolved PCBs and are adversely effected by elevated suspended solids concentrations.

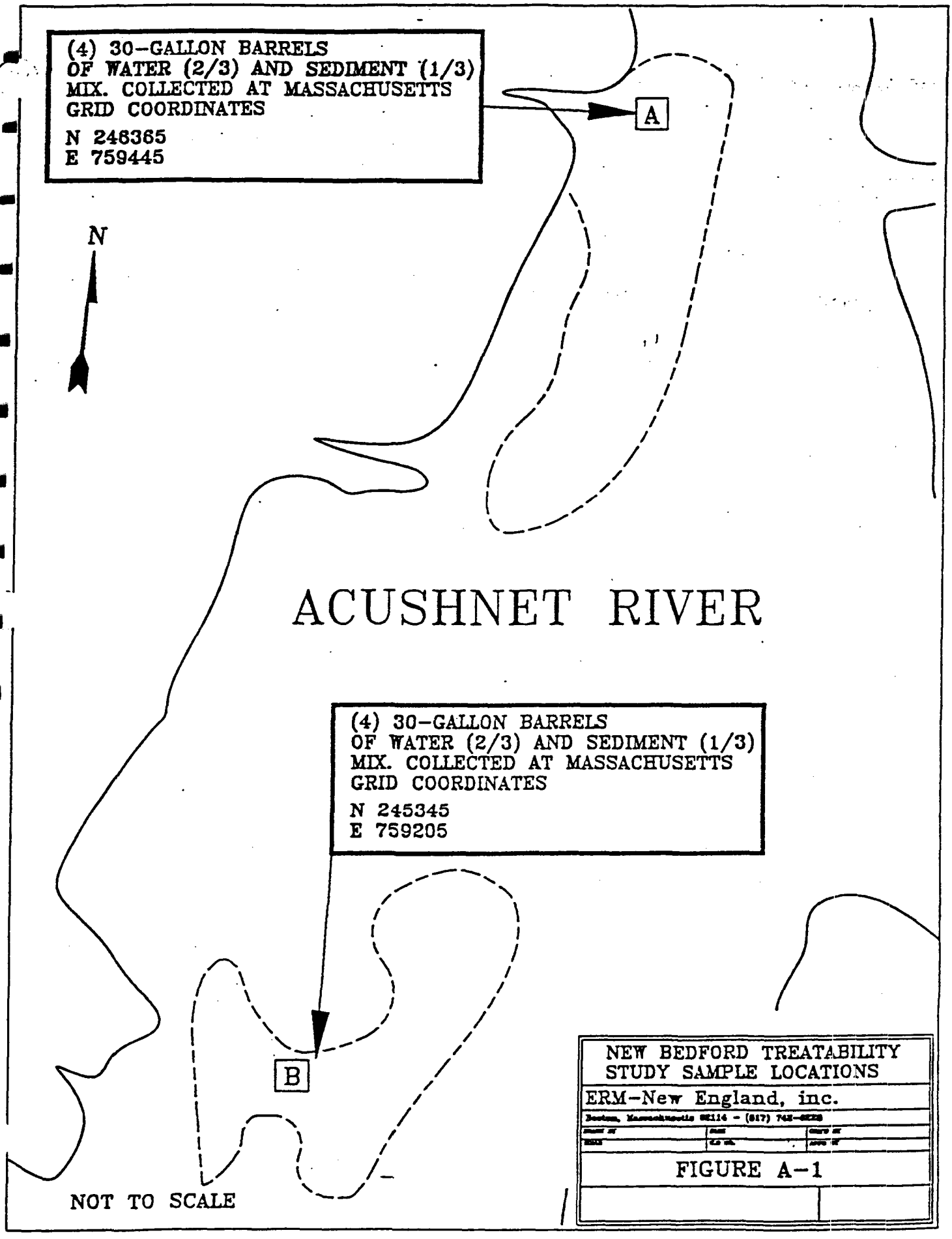
(4) 30-GALLON BARRELS
OF WATER (2/3) AND SEDIMENT (1/3)
MIX. COLLECTED AT MASSACHUSETTS
GRID COORDINATES
N 246365
E 759445
A
N
ACUSHNET RIVER
(4) 30-GALLON BARRELS
OF WATER (2/3) AND SEDIMENT (1/3)
MIX. COLLECTED AT MASSACHUSETTS
GRID COORDINATES
N 245345
E 759205
B
NOT TO SCALE
NEW BEDFORD TREATABILITY
STUDY SAMPLE LOCATIONS
ERM-New England, inc.
FIGURE A-1

Therefore, the ERM Treatability Study focused primarily on optimizing the removal of suspended material from the wastewater to ensure efficient and effective treatment of the dissolved PCBs using the subsequent treatment processes.

The results of the ERM Treatability Study are summarized below.

3.0 INITIAL DRUM CONCENTRATIONS

Drum No. B3-2 was thoroughly mixed and a representative sample collected for analyses to determine baseline concentrations for parameters of concern. The results of these analyses are presented in Table A-1. Additional sampling of other drum concentrations was not performed as the concentrations in this drum were determined to be consistent with previously collected field data for the Hot Spot Area.

3.1 Preparation of Elutriate

Representative samples simulating effluent characteristics from the CDF were prepared as follows:

1. Drum Nos. B3-4, A2-2, A2-4, and B3-3 were thoroughly mixed (for at least 5 minutes) and then allowed to settle for approximately 7 hours. Floating debris and oil was then removed from the liquid surface in these drums. Elutriate was then transferred from the four drums into a clean 55-gallon drum.

2. Prior to removing any elutriate samples from the composite 55-gallon drum, the drum was completely mixed for a minimum of five minutes using a tube mixer.

Contaminant concentrations in the elutriate 55-gallon composite drum are presented in Table A-2. The data indicates that the total suspended solids (TSS) concentrations in this drum are representative of elutriate after approximately two to three hours of settling. The elevated TSS values of

TABLE A-1
INITIAL DRUM CONCENTRATIONS

DRUM NUMBER	CONTAMINANT CONCENTRATION									
	PCB (µg/l)	Cd (µg/l)	Cr (6+) (µg/l)	Cu (µg/l)	Pb (µg/l)	Ni (µg/l)	Zn (µg/l)	PAH** (µg/l)	TSS (mg/l)	ALKALINITY (mg/l)
B3-2	26,000	3,080	7,340	68,600	38,100	6,270	17,600	23	64,840	368
SAMPLE NUMBER	IDC-1									
Blank	ND	ND	ND	ND	1	ND	4	ND	8	7
SAMPLE NUMBER	IDC-2									

** PAH VALUES BELOW QUANTITATION LIMITS

The ERM Group

TABLE A-2
ELUTRIATE DRUM CONCENTRATIONS

ELUTRIATE DRUM NUMBER	CONTAMINANT CONCENTRATION									
	PCB (µg/l)	Cd (µg/l)	Cr (6+) (µg/l)	Cu (µg/l)	Pb (µg/l)	Ni (µg/l)	Zn (µg/l)	PAH (µg/l)	TSS (mg/l)	ALKALINITY (mg/l)
1	810	17	264	694	762	730	1,940	3*	588	224
SAMPLE NUMBER	EDC-1									
1	940	15	257	754	690	210	2,230	6*	604	232
SAMPLE NUMBER	EDC-2									
1	16,800	NA	NA	NA	NA	NA	NA	NA	NA	NA
SAMPLE NUMBER	EDC-21									
2	49,000	9	201	708	719	216	2,080	128	557	NA
SAMPLE NUMBER	EDC-22									
2	49,000	10	200	661	783	150	1,990	87	525	NA
SAMPLE NUMBER	EDC-23									

* PAH VALUES BELOW QUANTITATION LIMITS

the elutriate composite drum likely resulted from collecting elutriate samples from close to the interface of the settled sediments. The elevated solids in the treatability study will be more representative of system operation as the CDF fills up with solids.

3.2 Floating Oil Removal

Subsequent to the performance of the treatability studies the USEPA Narragansett Laboratory, working for the USACE-NED, performed analyses of the floating oil generated during removal of PCB-contaminated sediments. These tests indicated that the floating oil contained high concentrations (better than 50%) PCBs. To reduce the PCB concentrations in subsequent wastewater treatment steps, in addition to minimizing volatilization of PCBs from the CDF, the floating PCB material should be removed immediately from the wastewater. We currently envision that floating absorbant booms will be placed on the CDF to collect this material.

4.0 PHASE 1 TESTING

4.1 Initial Settleability Test

After mixing drum No. B3-2 completely, two samples were drawn and placed in 1-liter graduated cylinders. The completely mixed samples were then allowed to gravity settle with the solids/liquid interface level monitored versus time. The interface levels are presented in Table A-3, and a plot of the interface level versus time is provided as Figure A-2.

Each time an interface level was recorded, a sample was drawn from drum No. B3-2 at a level above the interface. These samples were then analyzed for total suspended solids concentrations. Plots of total suspended solids in the elutriate versus time are presented as Figures A-3 and A-4.

4.2 Chemical Addition/Flocculation

Flocculation tests were performed in two stages. The first stage identified flocculant and polymer doses effective at removing solids based on visual

TABLE A-3
INITIAL SETTLING CHARACTERISTICS

APPROXIMATE ELAPSED TIME	TIME	ACTUAL ELAPSED TIME (MIN/HRS)	PARAMETER	SAMPLE NO.	COMMENTS
0 MIN.	8:16	0	SUPERNATANT (TSS)	ISC-0	64,840
			INTERFACE LEVEL (ML)	1,000	1,000
5 MIN.	8:20	4	SUPERNATANT (TSS)	ISC-5	-
			INTERFACE LEVEL (ML)	800	800
10 MIN.	8:26	10	SUPERNATANT (TSS)	ISC-10	-
			INTERFACE LEVEL (ML)	650	650
15 MIN.	8:31	15	SUPERNATANT (TSS)	ISC-15	-
			INTERFACE LEVEL (ML)	560	560
30 MIN.	8:46	30	SUPERNATANT (TSS)	ISC-30	2,410
			INTERFACE LEVEL (ML)	470	470
45 MIN.	9:01	45	SUPERNATANT (TSS)	ISC-45	-
			INTERFACE LEVEL (ML)	430	430
1 HR.	9:16	1	SUPERNATANT (TSS)	ISC-60	660
			INTERFACE LEVEL (ML)	410	410
2 HR.	10:16	2	SUPERNATANT (TSS)	ISC-120	460
			INTERFACE LEVEL (ML)	360	360
3 HR.	11:16	3	SUPERNATANT (TSS)	ISC-180	300
			INTERFACE LEVEL (ML)	340	340
4 HR.	-	-	SUPERNATANT (TSS)	ISC-240	-
			INTERFACE LEVEL (ML)	-	-
5 HR.	1:24	5.125	SUPERNATANT (TSS)	ISC-300	236
			INTERFACE LEVEL (ML)	320	320
6 HR.	2:16	6	SUPERNATANT (TSS)	ISC-360	180
			INTERFACE LEVEL (ML)	315	315
7 HR.	2:16	7	SUPERNATANT (TSS)	ISC-420	236
			INTERFACE LEVEL (ML)	310	310
8 HR.	4:16	8	SUPERNATANT (TSS)	ISC-480	232
			INTERFACE LEVEL (ML)	310	310
9 HR.			SUPERNATANT (TSS)	ISC-540	220
			INTERFACE LEVEL (ML)	-	-

The ERM Group

FIGURE A-2
HOT SPOT SEDIMENT INTERFACE LEVEL VS. TIME

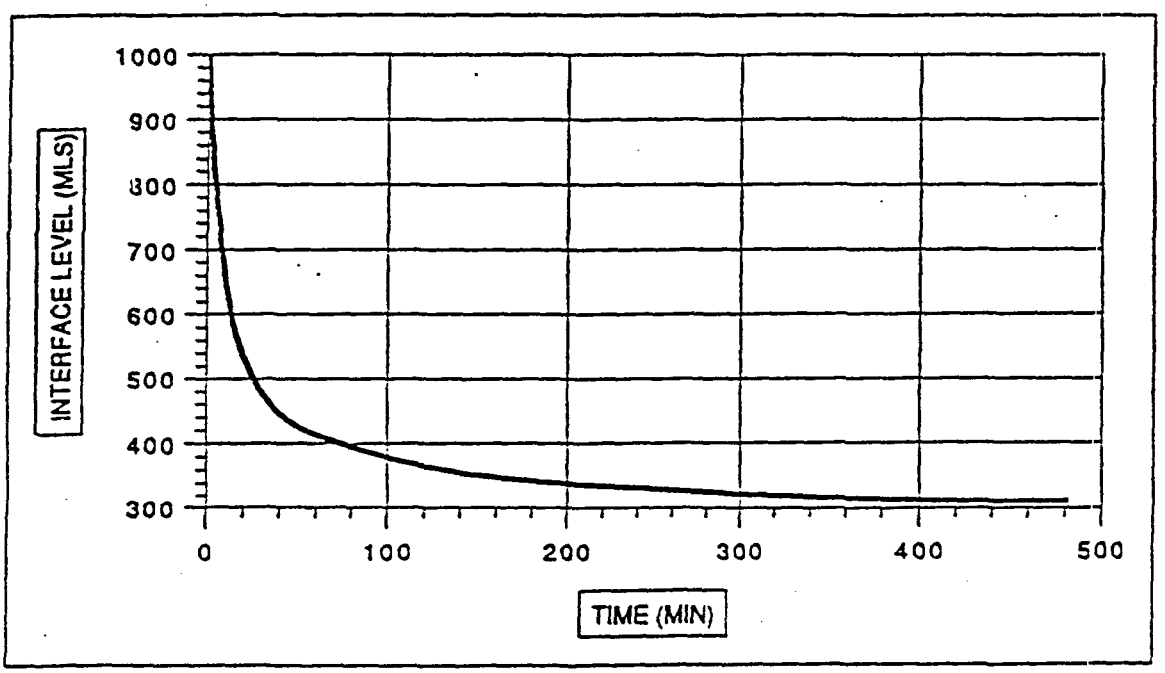

The ERM Group

FIGURE A-3
ELUTRIATE TOTAL SUSPENDED SOLIDS VS. TIME

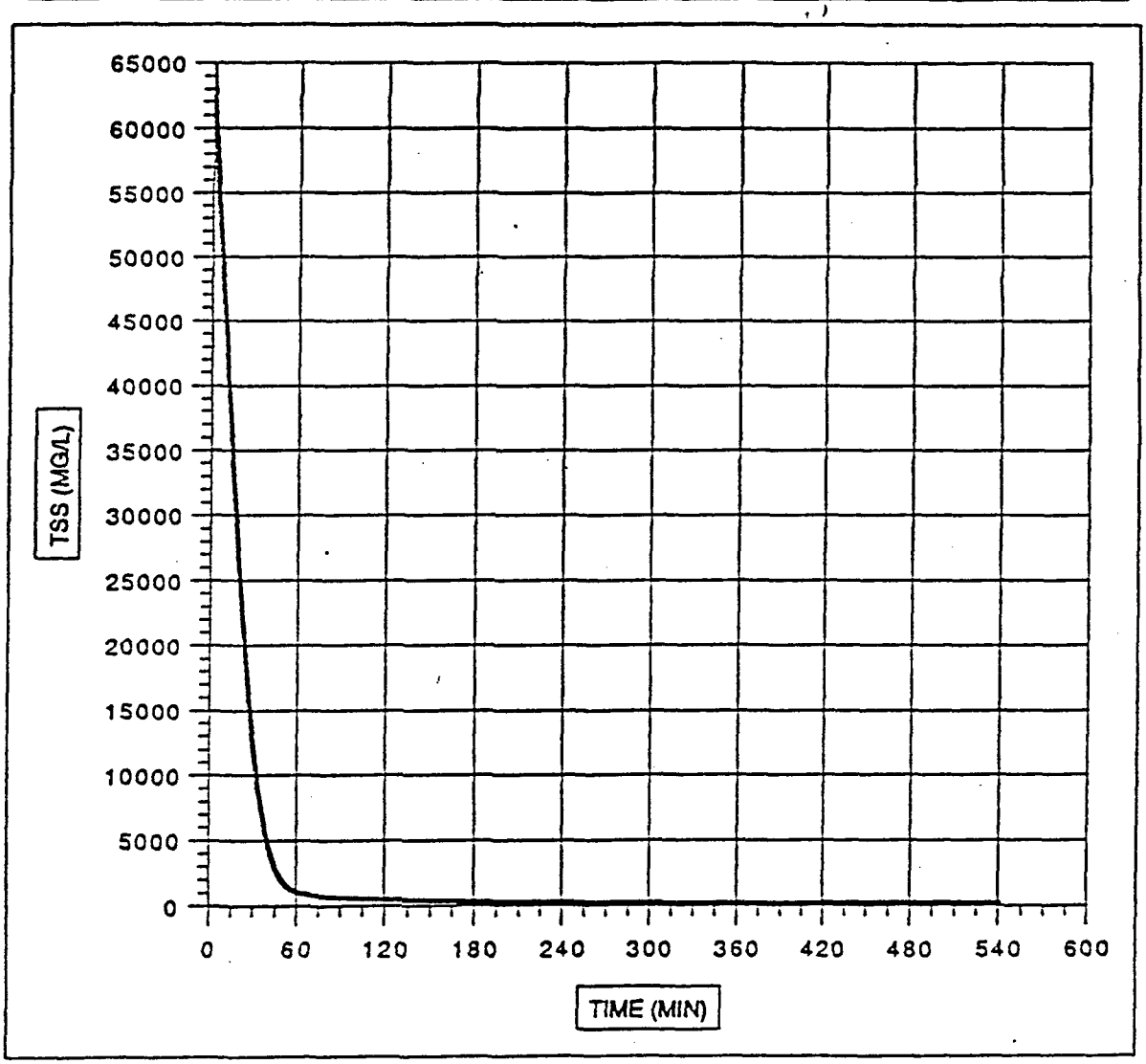

Refer to Figure A-4 for detailed information beyond 30 minutes.

The ERM Group

FIGURE A-4
ELUTRIATE TOTAL SUSPENDED SOLIDS VS. TIME

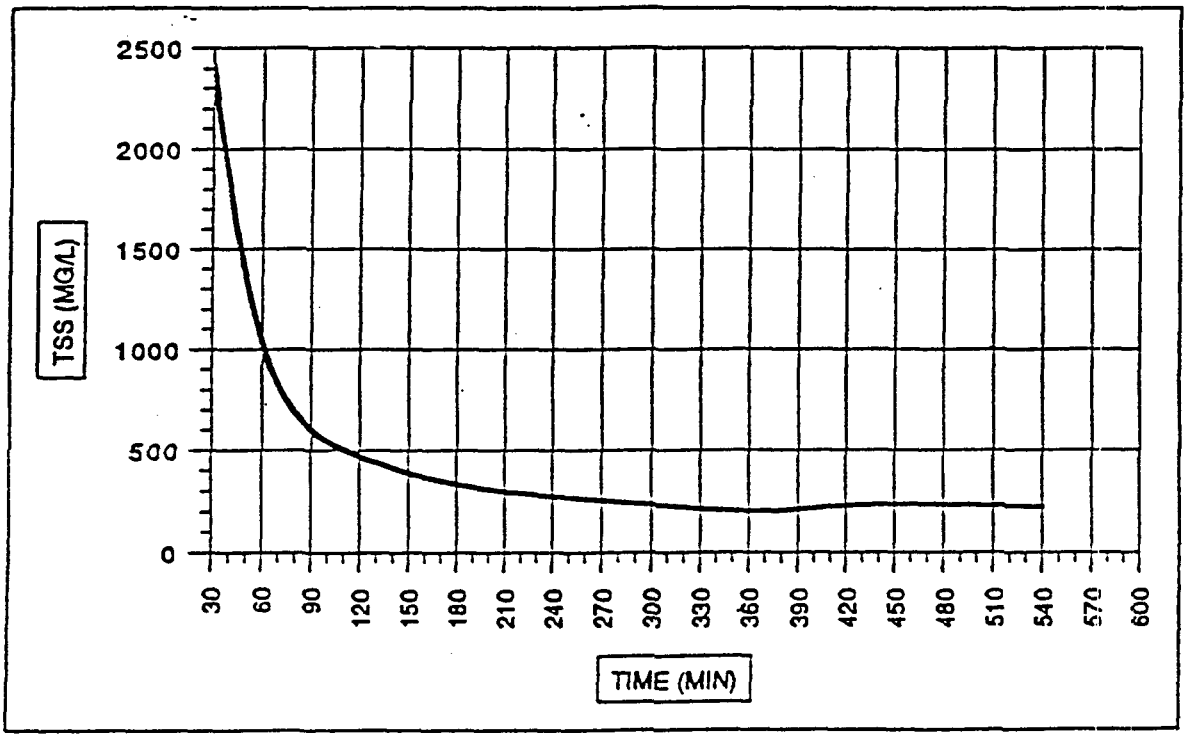

The ERM Group

observation of the samples after settling. The second stage involved optimizing flocculant and polymer doses identified in the first stage and to confirm the visual determinations with analytical results.

4.3 Stage 1 Flocculation Tests

During the first stage flocculation tests the following polymers and flocculants were evaluated:

1. Cat-Floc TS (Calgon)
2. Cat-Floc LS (Calgon)
3. Magnifloc 1596C (American Cyanamid)
4. Magnifloc 1598C (American Cyanamid)
5. Magnifloc 1839A (American Cyanamid)
6. Alum
7. Ferric Chloride
8. Lime
9. Ferrous Sulfate

During the first stage flocculation test various combinations of selected polymers and inorganic coagulants were evaluated. Synthetic polymer and inorganic chemical combinations of various dosages were mixed with elutriate samples to evaluate effectiveness. Flocculants were added to the beakers filled with elutriate and the solutions mixed at approximately 100 rpm for a minimum of 15 seconds to simulate rapid mixing. Samples were then flocculated for fifteen minutes using a Philipps and Bird paddle mixer turning at approximately 6 rpm. After flocculation, the solutions were allowed to settle for approximately fifteen minutes. At the end of the fifteen minute settling time, the samples were visually evaluated to determine removal effectiveness.

Inorganic chemicals were evaluated individually, as well as in combinations with the most promising polymers. Organic polymers tend to foul micro-filtration unit membranes (considered as a part of the treatment process). Therefore emphasis was placed on identifying

efficient inorganic polymer doses. The results of the visual observations of the various doses of inorganic polymers are summarized in Table A-4.

4.4 Stage 2 Flocculation Tests

During the final Stage 2 flocculation tests, elutriate samples were dosed with the flocculants in concentrations determined to be effective during the Stage 1 settling tests. Solutions were flocculated and then settled for a period of fifteen minutes. Supernatant was carefully decanted from each beaker to minimize resuspension of settled material. To generate sufficient decant sample for the required analytical analyses, three 1,000 ml beakers were required for each flocculant dose. The decants were then mixed and the combined solution used for the required analytical analyses.

Initial chemical dosages, final suspended solids and other specified data for each flocculant dose are presented as Runs 1 through 14 in Table A-5.

4.5 Filtration

The filtration analyses were designed to simulate sand filter and microfilter effectiveness in reducing solids concentrations for clarified wastewaters.

Samples were dosed with the appropriate concentrations of flocculant. Initial values of the contaminant concentrations are indicated in Table A-5. Supernatant samples from the settled samples were prepared and filtered through membranes with 10 (representative of sand filters) and 2.5 (representative of microfilters) micron particle retention. The 10 micron filter was fabricated with nylon while the 2.5 micron filter was fabricated with glass fibers. Glass fiber filters are preferred as they minimize the amount of PCBs absorbed onto the filter media. However, nylon filters were used when glass filters were unavailable. The results of these tests are presented in Table A-6.

Laboratory notes prepared during the filtration tests indicate that approximately 1,300 mls of sample were filtered through the 2.5 micron

TABLE A-4
PRELIMINARY FLOCCULANT ADDITION OBSERVATIONS

	FLOCCULANT ADDITION					POLYMER ADDITION							
ELUTRIATE DRUM NO.	FLOCCULANT ADDED	CONC OF FLOC. ADDED (MG/L)	FLOCCULANT VOLUME	SOLUTION VOLUME	FINAL DOSING RATE (ppm)	POLYMER ADDED	CONCENTRATION OF POLYMER ADDED	POLYMER VOLUME	SOLUTION VOLUME	FINAL DOSING RATE	RAPID SPEED TIME (SEC) FULL SPEED	FLOCC. MIX TIME (MIN) 6 RPM	OBSERVATIONS
1	ALUM	1%	1 ml	1000 ml	ERR 9	.	.	.	.	.	15	15	SUPERNATENT NOT CLEAR
1	ALUM	1%	2 ml	1000 ml		.	.	.	.	.	15	15	SUPERNATENT NOT CLEAR
1	ALUM	1%	5 ml	1000 ml		.	.	.	.	.	15	15	BULKY SLUDGE GOOD FLOC FORMATION
1	ALUM	1%	10 ml	1000 ml		.	.	.	.	.	15	15	BULKY SLUDGE SUPERNATENT NOT CLEAR
1	ALUM	1%	20 ml	1000 ml		.	.	.	.	.	15	15	SUPERNATENT NOT CLEAR BULKY FLOC
1	ALUM	1%	50 ml	1000 ml		.	.	.	.	.	15	15	SUPERNATENT NOT CLEAR OVERDOSE
1	FERRROUS SULPATE	1%	1 ml	1000 ml		.	.	.	.	.	15	15	NO FLOC FORMATION SUPERNATENT NOT CLEAR
1	FERRROUS SULPATE	1%	2 ml	1000 ml		.	.	.	.	.	15	15	NO FLOC FORMATION SUPERNATENT NOT CLEAR
1	FERRROUS SULPATE	1%	5 ml	1000 ml		.	.	.	.	.	15	15	NO FLOC FORMATION SUPERNATENT NOT CLEAR
1	FERRROUS SULPATE	1%	10 ml	1000 ml		.	.	.	.	.	15	15	NO FLOC FORMATION SUPERNATENT NOT CLEAR
1	FERRROUS SULPATE	1%	20 ml	1000 ml		.	.	.	.	.	15	15	NO FLOC FORMATION SUPERNATENT NOT CLEAR
1	FERRROUS SULPATE	1%	50 ml	1000 ml		.	.	.	.	.	15	15	NO FLOC FORMATION SUPERNATENT NOT CLEAR
1	FERRROUS SULPATE	1%	20 ml	1000 ml		.	.	.	.	.	15	15	NO FLOC FORMATION SUPERNATENT NOT CLEAR
1	FERRROUS SULPATE	1%	30 ml	1000 ml		.	.	.	.	.	15	15	NO FLOC FORMATION SUPERNATENT NOT CLEAR
1	LIME	1%	1 ml	1000 ml		.	.	.	.	.	15	15	NO FLOC
1	LIME	1%	2 ml	1000 ml		.	.	.	.	.	15	15	NO FLOC
1	LIME	1%	5 ml	1000 ml		.	.	.	.	.	15	15	NO FLOC
1	LIME	1%	10 ml	1000 ml		.	.	.	.	.	15	15	PIN FLOC FORMATION
1	LIME	1%	20 ml	1000 ml		.	.	.	.	.	15	15	PIN FLOC FORMATION CLEAR SUPERNATENT
1	LIME	1%	50 ml	1000 ml		.	.	.	.	.	15	15	BULKY SLUDGE CLEAR SUPERNATENT
1	LIME	1%	20 ml	1000 ml		.	.	.	.	.	15	15	WELL SHTTLED SLUDGE CLEAR SUPERNATENT
1	LIME	1%	25 ml	1000 ml		.	.	.	.	.	15	15	CLEAREST LIME SUPERNATENT
1	LIME	1%	30 ml	1000 ml		.	.	.	.	.	15	15	CLEAREST LIME SUPERNATENT
1	LIME	1%	40 ml	1000 ml		.	.	.	.	.	15	15	CLEAR SUPERNATENT - GREATER VISIBLE SUSPENDED SOLIDS
1	FERRIC CHLORIDE	40%	5 ml	1000 ml		.	.	.	.	.	15	15	FINE FLOC MURKY SUPERNATENT
1	FERRIC CHLORIDE	40%	10 ml	1000 ml		.	.	.	.	.	15	15	FINE FLOC MURKY SUPERNATENT
1	FERRIC CHLORIDE	40%	1ml	1000 ml		.	.	.	.	.	15	15	RAPID SETTLING SUPERNATENT NOT CLEAR
1	FERRIC CHLORIDE	40%	2 ml	1000 ml		.	.	.	.	.	15	15	OVERDOSE
1	FERRIC CHLORIDE	40%	3 ml	1000 ml		.	.	.	.	.	15	15	OVERDOSE
1	FERRIC CHLORIDE	40%	0.2 ml	1000 ml		.	.	.	.	.	15	15	CLEAR SUPERNATENT, BULKY FLOC SLIGHTLY YELLOW SUPERNATENT
1	FERRIC CHLORIDE	40%	0.3 ml	1000 ml		.	.	.	.	.	15	15	CLEAR SUPERNATENT, BULKY FLOC SLIGHTLY YELLOW SUPERNATENT
1	FERRIC CHLORIDE	40%	0.5 ml	1000 ml		.	.	.	.	.	15	15	POOR SETTLING
1	FERRIC CHLORIDE	1%	1 ml	1000 ml		.	.	.	.	.	15	15	CLEAR SUPERNATENT BULKY FLOC
1	FERRIC CHLORIDE	1%	2 ml	1000 ml		.	.	.	.	.	15	15	OVERDOSE
1	FERRIC CHLORIDE	1%	0.5 ml	1000 ml		.	.	.	.	.	15	15	POOR SETTLING

ERM GROUP

TABLE A-5
FLOCCULANT ADDITION WORKSHEET

	FLOCCULANT ADDITION					POLYMER 1 ADDITION					POLYMER 2 ADDITION					
RUN NO.	FLOCCULANT ADDED	FLOCCULANT CONCENTRATION (GM/L)	FLOCCULANT VOLUME (ML)	SOLUTION VOLUME (ML)	FINAL DOSING RATE (PPM)	POLYMER ADDED	POLYMER CONCENTRATION (GM/L)*	POLYMER VOLUME (ML)	SOLUTION VOLUME (ML)	FINAL DOSING RATE (PPM)	POLYMER ADDED	POLYMER CONCENTRATION (GM/L)	POLYMER VOLUME (ML)	SOLUTION VOLUME (ML)	FINAL DOSING RATE (PPM)	RAPID SPEED TIME (SEC)
1	ALUM	5.13	5	1005	26	-	-	-	-	-	-	-	-	-	-	15
2	ALUM	5.13	10	1010	51	-	-	-	-	-	-	-	-	-	-	15
3	LIME	9.96	20	1020	195	-	-	-	-	-	-	-	-	-	-	15
4	LIME	9.96	30	1030	290	-	-	-	-	-	-	-	-	-	-	15
5	LIME	9.96	25	1025	243	-	-	-	-	-	-	-	-	-	-	15
6	BLANK	-	-	-		-	-	-	-	-	-	-	-	-	-	15
7	LIME	9.96	40	1040	383	-	-	-	-	-	-	-	-	-	-	15
8	Fe(Cl)3	6.00	1	1001	6	-	-	-	-	-	-	-	-	-	-	15
9	Fe(Cl)3	6.00	1.5	1001.5	9	-	-	-	-	-	-	-	-	-	-	15
10	Fe(Cl)3	6.00	0.8	1000.8	5	-	-	-	-	-	-	-	-	-	-	15
11	ALUM	5.00	5	1005	25	MAGNIFLOC 1596 C	10.00	1	1006	9.94	-	-	-	-	-	15
12	ALUM	5.00	5	1005	25	CATFLOC LS	10.00	1	1006	9.94	-	-	-	-	-	15
13	LIME	9.96	25	1025	243	CATFLOC TL	10.00	1	1026	9.75	-	-	-	-	-	15
14	LIME	9.96	25	1025	243	MAGNIFLOC 1598 C	10.00	1	1026	9.75	MAGNIFLOC 1839 A	0.01	1	1000	0.01	15
15	ALUM	5.00	10	1010	49	-	-	-	-	-	-	-	-	-	-	15
16	ALUM	5.00	5	1005	25	MAGNIFLOC 1596 C	10.00	10	1015	98.52	-	-	-	-	-	15
17	ALUM	5.00	5	1005	25	CATFLOC LS	10.00	10	1015	98.52	-	-	-	-	-	15
18	ALUM	5.00	5	1005	25	-	-	-	-	-	-	-	-	-	-	15

The ERM Group

TABLE A-5 (CONT.)
FLOCCULANT ADDITION WORKSHEET

RUN NO.	SAMPLING TIME (MIN)	CONTAMINANT CONCENTRATION												
		TSS (MG/L)	PCB (µg/L)	Cd (µg/L)	Cu (µg/L)	Cr(+6) (µg/L)	Pb (µg/L)	Ni (µg/L)	Zn (µg/L)	Al (µg/L)	PAH** (µg/L)	TDS (MG/L)	pH	ALKANITY (MG/L)
1	15	5	320	5	3	6	7.1	23	51	NT	4	25,651	6.6	192
	SAMPLE NO.	PA-1												
2	15	13	190	5	3	6	11	19	51	NT	4	25,310	6.3	144
	SAMPLE NO.	PA-2												
3	15	285	80	5	10	8	18	22	81	NT	5	24,895	8.9	112
	SAMPLE NO.	PA-3												
4	15	323	67	5	11	6	16	17	48	NT	6	24,688	9.3	120
	SAMPLE NO.	PA-4												
5	15	338	51.9	5	15	6	11	17	56	NT	2	24,966	NT	176
	SAMPLE NO.	PA-5												
6	15	5	ND	5	3	6	1	17	5	NT	ND	5	NT	4
	SAMPLE NO.	PA-6												
7	15	376	67	5	7	6	6.4	17	57	NT	3	24,525	NT	162
	SAMPLE NO.	PA-7												
8	15	31	105	5	11	6	11	17	82	NT	ND	25,437	NT	172
	SAMPLE NO.	PA-8												
9	15	36	96	5	17	6	9.3	21	98	NT	ND	25,318	NT	184
	SAMPLE NO.	PA-9												
10	15	35	45.9	5	15	6	10	27	92	NT	ND	25,427	NT	200
	SAMPLE NO.	PA-10												
11	15	5	62	5	7	6	6.4	24	81	NT	ND	25,507	NT	168
	SAMPLE NO.	PA-11												
12	15	18	186	5	12	6	5	21	70	NT	1	25,587	NT	172
	SAMPLE NO.	PA-12												
13	15	248	47	5	12	6	9.8	17	27	NT	2	24,762	NT	100
	SAMPLE NO.	PA-13												
14	15	241	43	5	8	6	7.6	17	30	NT	2	24,879	NT	108
	SAMPLE NO.	PA-14												
15	15	41	2,400	3	11	7	8	14	58	3,220	12	NT	NT	NT
	SAMPLE NO.	PA-23												
16	15	60	3,200	3	14	6	17	22	66	846	NT	NT	NT	NT
	SAMPLE NO.	PA-24												
17	15	47	3,200	5	17	8	11	18	76	987	NT	NT	NT	NT
	SAMPLE NO.	PA-25												
18	15	40	222/2800	5	15	11	9.4	20	66	1,070	NT	NT	NT	NT
	SAMPLE NO.	PA-26												

TABLE A-6
FILTRATION WORKSHEET

RUN NO.	FLOCCULANT ADDED	FLOCCULANT CONCENTRATION (GM/L)	FLOCCULANT VOLUME (ml)	SOLUTION VOLUME (ml)	INITIAL TSS (mg/l) *	FILTER SIZE	FINAL TSS (mg/l)	PCB (mg/l)	METALS (µg/l) Cd	Cr**	Cu	Pb	Ni	Zn	Al	Fe	PAH	TDS (mg/l)	Alkalinity (mg/l)
1	ALUM	5	5	1005	5	2.5 microns	9	73	5	6	7	4	18	74	NT	NT	ND	25,009	102
							FI-1												
2	ALUM	5	5	1005	5	10.0 micron	9	46.2	5	6	6	4	22	47	NT	NT	ND	25,243.5	176
							FI-2												
3	Fe(Cl)3	6	1	1001	31	2.5 microns	5	94.9	5	6	9	5	31	49	NT	NT	ND	24,992	168
							FI-3												
4	Fe(Cl)3	6	1	1001	31	10.0 micron	5	51.2	5	6	18	3	26	58	NT	NT	ND	25,495	192
							FI-4												
5	ALUM	5	-	-	31	2.5 microns	22	79.9	3	6	3	2	13	45	126	11,500	ND	NT	NT
							FI-21												

* Initial Total Suspended Solids concentrations calculated from Table 5 values.
** Chromium values are totals except FI-2 (CR(6+))
NT - Sample not taken

filter before it clogged. A coarse filter (10 micron) will be required prior to the 2.5 micron filter to minimize premature fouling of the filter. A coarse filter will increase the period of time required between 2.5 micron filter changeout.

5.0 PHASE 2 TESTING

5.1 UV/Oxidation

The UV/oxidation tests were performed by Peroxidation Systems Inc. of Tucson Arizona. Samples were prepared from the remaining elutriate in Elutriate Drum No. 1 by dosing the drum contents with approximately 15 ppm (as aluminum sulfate) of alum. The elutriate drum was rapid mixed for 15 seconds and then flocculated for approximately 15 minutes. The drum contents were then allowed to settle for 15 minutes. The supernatent was decanted and filtered through a 2.5 micron glass fiber filter. The treatability study indicated that UV/oxidation was capable of reducing the total PCB concentration in the wastewater to below detection limits. Additional experience by the vendor indicates that PCB removal to 0.6 ppb levels will be achieved. In addition, the study indicated that pretreatment to control iron concentrations will be required. The full details of the UV/oxidation testing are included as Appendix B.

5.2 Flocculation Study Verification

During this phase of the testing a new elutriate drum was prepared by combining the supernatant from Drums No. A2-1, A2-3, and B3-1. The concentrations of contaminants in this combined elutriate drum are presented in Table A-2.

Additional flocculation tests were performed using flocculants determined to be effective during the Phase 1 tests. The results of these tests, and the flocculant doses used, are presented as Runs 15 through 18 in Table A-5.

During Phase 1 testing samples collected had low PCB concentrations and high TSS concentrations as shown on Figure A-5. Since PCBs have a high

FIGURE A-5
PCB AND TSS CONCENTRATIONS IN CLARIFIED SAMPLES

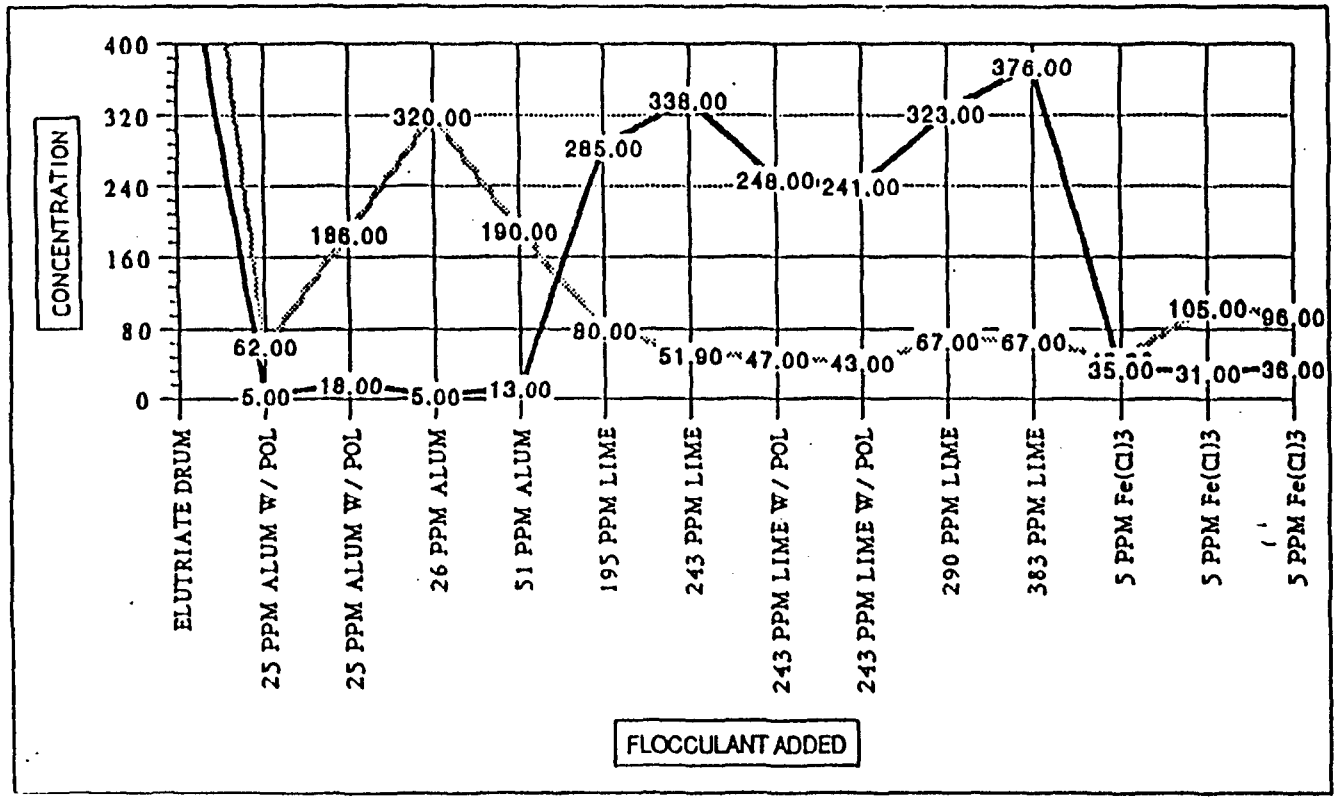

affinity for solids, this would imply that as TSS concentrations in the samples increase so would PCB concentrations. A laboratory analysis procedure was the suspected cause of this data. The laboratory performing the analysis indicated that the sample bottles were allowed to sit for approximately one week prior to analysis and then the sample for analysis was obtained by decanting the sample bottle. This procedure could explain the results seen during the Phase 1 testing.

In order to verify this hypothesis, two tests were performed during the Phase 2 testing. First, samples from elutriate drum No. 1 were taken and shaken prior to analysis. The PCB concentrations in the shaken sample are presented in Table A-2. Second, duplicate samples were taken and the laboratory was instructed to decant one sample and shake the other prior to analysis. The higher PCB concentrations in the shaken samples indicated a portion of the total PCBs were adhering to solids that settled out of the sample during the week between sample collection and analysis. All subsequent PCB samples were shaken prior to analysis to ensure that PCB concentrations in these samples were accurate.

Analyses were also performed for aluminum concentrations in the settled effluent to determine if using aluminum sulfate as a flocculant would not cause aluminum concentrations to exceed acceptable values.

5.3 Carbon Adsorption

Carbon adsorption tests were performed on elutriate treated with 25 ppm (as aluminum sulfate) of alum and filtered through a 2.5 micron glass fiber filter. The PCB concentration of the samples used during this test averaged 127.5 ppb. Powdered activated carbon was then added to seven 1,000 ml beakers at various doses and mixed with the wastewater for approximately 18 hours. The solutions were then filtered through a 2.5 micron filter to remove the carbon and then analyzed for PCB content. The results of these tests are presented in Table A-7 and a plot of the isotherm generated is shown as Figure A-6. As indicated, the isotherm indicates that PCB removal to anticipate discharge limits (0.6 ppb) will require large doses of activated carbon. It is believed that the need for large quantities

TABLE A-7
CARBON ADDITION WORKSHEET

SAMPLE NUMBER	BEAKER VOLUME (ML)	CARBON DOSE (MG/L)	INITIAL PCB CONCENTRATION (Co)(mg/l)	FINAL PCB CONCENTRATION (Cf)(mg/l)	mg PCB ADSORBED/ gm CARBON (Co-Cf)/M	PCB REMOVED (Co-Cf)(mg/l)
C-00	1000	0	0	0.0062	-	-
C-1	1000	1	0.1275	0.0646	62.90	0.0629
C-2.5	1000	3.5	0.1275	0.0635	18.29	0.064
C-10	1000	16	0.1275	0.0604	4.19	0.0671
C-50	1000	54.4	0.1275	0.053	1.37	0.0745
C-100	1000	180.9	0.1275	0.0528	0.41	0.0747
C-250	1000	263.8	0.1275	0.037	0.34	0.0905
C-500	1000	530.8	0.1275	0.0408	0.16	0.0867

The ERM Group

FIGURE A-6
CARBON ISOTHERM

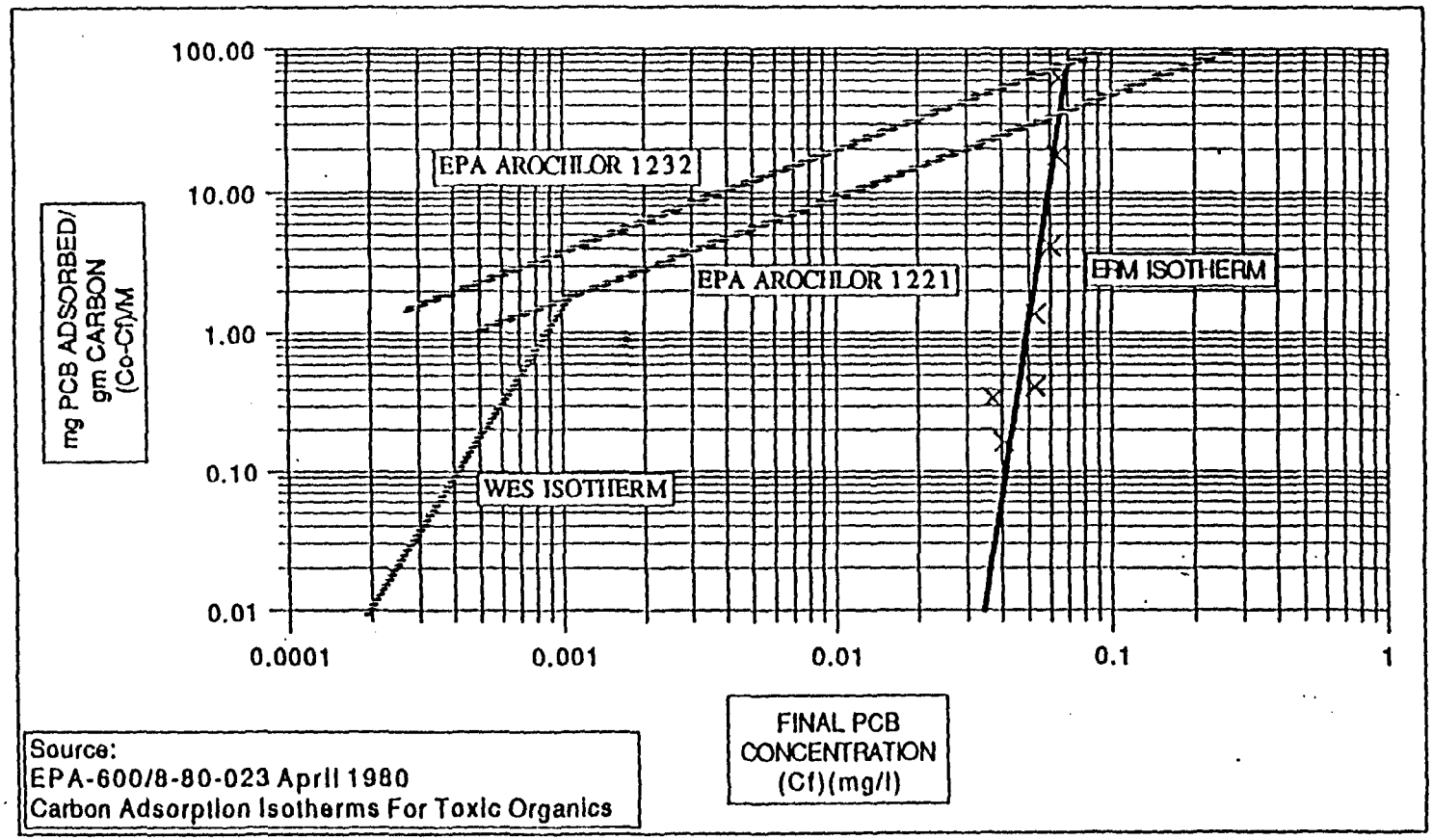

Source:
EPA-600/8-80-023 April 1980
Carbon Adsorption Isotherms For Toxic Organics

of activated carbon to achieve the anticipated discharge limit (0.6 ppb PCBs) results from PCB adherence to minute solid particles that remain in solution after filtration.

APPENDIX B

UV/Oxidation Design Studies

ERM Treatability Study (November 1991)

APR 1 1991

March 28, 1991

Mr. Bill Breed
ERM - New England
205 Portland Avenue
Boston, Massachusetts 02114

Re: Bench-Scale Treatability Study
New Bedford Superfund Site
Project #TMM-9102-5381

Dear Mr. Breed:

Peroxidation Systems, Inc. (PSI) was contracted by ERM - New England (ERM) to perform a treatability study on contaminated surface water using the **perox-pure**™ Process. The surface water reportedly contained 320 μg/l of PCBs. The specified treatment objective was the destruction of PCBs to 1 μg/l.

A bench-scale **perox-pure**™ treatability study was performed on the surface water in early February of 1991. The study was performed at the PSI Testing Laboratory in Tucson, Arizona. The purpose of the study was to provide a range of data from which full-scale treatment criteria could be determined. A copy of the bench-scale testing report is enclosed.

The surface water received by PSI was turbid orange with high iron and suspended solids concentrations. Since the iron and solids concentrations were at levels which would hinder the perox-pure™ reaction and foul the quartz tubes in the **perox-pure**™ equipment, pretreatment was effected via gravity filtration. After filtration, the suspended solids concentration was negligible and the iron concentration in the surface water was less than 1 mg/l.

A series of bench-scale tests were conducted on the contaminated surface water at a variety of oxidation times, H_2O_2 dosages and pH values. Determination of the best treatment conditions was not possible because the PCBs were destroyed to below the 5 μg/l analytical detection limit in every treated sample. However, PCB oxidation was rapid with destruction to below the detection limit occurring within 0.5 minutes in some cases.

Based upon the bench-scale results, and previous treatability studies conducted by PSI on PCB laden waters, a full-scale contact time of 1.4 minutes is projected to meet the specified treatment criteria. A **perox-pure**™ Model CWB 360 will provide the necessary contact time at the anticipated full-scale surface water flow rate of 350 gpm. A specification sheet for the CWB 360 is enclosed for your information.

I understand that ERM plans to rent the **perox-pure**™ treatment equipment for a period of four months in the spring of 1992. While PSI will make every effort to meet this schedule, it is not possible to reserve a CWB 360 for such a short period of time. The **perox-pure**™ equipment is therefore subject to availability.

Peroxidation Systems Inc.
5151 E. Broadway, Suite 600 Tucson, Arizona 85711 602-790-8383 FAX 602-790-8008

The rental fee for the perox-pure™ Model CWB 360 including the hydrogen peroxide (H_2O_2) feed module and complete service/maintenance of the equipment by PSI is $15,000 per month. The usage of PSI H_2O_2 solution would also be billed each month. A fee of $15,000 would apply for equipment mobilization, and an additional $15,000 when the equipment is removed.

In comparison to the rental fees, purchase of the CWB 360 would involve a capital investment of approximately $350,000 as well as additional fees for repair/maintenance parts and labor. The mobilization and demobilization fees would also apply.

For an PCB effluent concentration of 0.6 μg/l, a CWB-405/360 would be required. The capital cost for this unit is approximately $15,000 more than the CWB-360 quoted above.

Bill, thank you for the opportunity to demonstrate the capabilities of the perox-pure™ Process in treating the contaminated s urface water at the New Bedford Site. If you need any additional information, or if you have any questions concerning the treatability study or the perox-pure™ equipment, please feel free to call Mike Donaway at (201)276-0044 or myself.

Sincerely,

Kathy J. Kent
Applications Engineer

KJK:cw
Enclosure

cc: Fred Bernardin, PSI
Mike Donaway, PSI
Geoff Swett, PSI
PSI File

CONFIDENTIAL TESTING REPORT

DESTRUCTION OF ORGANIC CONTAMINANTS IN SURFACE WATER WITH THE perox-pure™ PROCESS

for

ERM-New England
Boston, Massachusetts
Purchase Order No. 20801-04

by

Peroxidation Systems, Inc.
5151 E. Broadway, Suite 600
Tucson, Arizona 85711

February 27, 1991

The information contained in this report includes descriptions and procedures which are confidential to Peroxidation Systems, Inc. The report shall not be copied nor released to third parties without prior approval from Peroxidation Systems, Inc.

TABLE OF CONTENTS

		Page
1.0	INTRODUCTION	1
2.0	TESTING PROCEDURES	2
	2.1 Description of Surface Water	2
	2.2 Testing Protocol	2
3.0	TESTING RESULTS	3
4.0	FULL-SCALE TREATMENT CONDITIONS	5
	4.1 Treatment Criteria	5
	4.2 Recommended Process Conditions	5
5.0	SUMMARY	6

1.0 INTRODUCTION

The perox-pure™ Process destroys dissolved organic contaminants in water by means of chemical oxidation. Ultraviolet (UV) light catalyzes the chemical oxidation of organic contaminants in water by its combined effect upon the organic contaminants and its reaction with hydrogen peroxide (H_2O_2). Many organic contaminants absorb UV light and may undergo a change in their chemical structure or may become more reactive with chemical oxidants. More importantly, UV light at less than 400 nm wavelength reacts with H_2O_2 molecules to form hydroxyl radicals. These powerful chemical oxidants then react with the organic contaminants in the water. If carried to completion the reaction products of hydrocarbon oxidation with the perox-pure™ Process are carbon dioxide and water.

Peroxidation Systems, Inc. (PSI) was contracted by ERM-New England (ERM) to perform a treatability study on contaminated surface water from the New Bedford Superfund Site using the perox-pure™ Process. The surface water reportedly contained 320 µg/l of PCBs and 4 µg/l of naphthalene. The treatment objective specified by ERM was the destruction of PCBs to 1 µg/l.

A bench-scale perox-pure™ treatability study was performed on the surface water during February 1991 at the PSI Testing Laboratory in Tucson, Arizona. These tests were designed to provide a range of data from which full-scale treatment criteria and costs would be projected.

2.0 TESTING PROCEDURES

2.1 Description of Surface Water

On January 29, 1991, approximately 12 gallons of surface water was received from ERM at the PSI Laboratory in Tucson, Arizona. The surface water was contained in 4-liter amber glass bottles with no headspace.

Characterization of the surface water sample was performed by PSI to determine parameters of importance for perox-pure™ treatment. The surface water as received contained iron and suspended solids which were removed via gravity filtration prior to performing bench-scale testing. The characterization results for the raw and filtered surface water are shown below. An analysis of the raw surface water revealed the presence of 80 µg/l of total PCBs. Naphthalene was not detected.

	Raw	Filtered
Visual Color:	Orange/ Cloudy	Clear/ Colorless
pH:	6.5	6.5
Iron (mg/l):	12.5	2.5-1.8*
Chloride (mg/l):	14,250	14,250
Total Organic Carbon (mg/l):	7	7
Total Dissolved Solids (mg/l):	12,100	13,100
Est. Suspended Solids (mg/l):	<20	<0.2
Alkalinity (mg/l):	150	110
Turbidity (FTU):	85	<5

* Several iron removal methods were investigated as part of the bench-scale testing variables.

2.2 Testing Protocol

The bench-scale perox-pure™ test unit was charged by placing an aliquot of the water into a recycle reservoir. A pump was started which circulated the solution through the UV oxidation chamber and back into the reservoir providing continual mixing in the closed system. Sulfuric acid was added to the surface water at this time to adjust the pH for certain tests.

The UV lamp was illuminated to start a test, and H_2O_2 was added as required to maintain a constant concentration in solution. The solution temperature was controlled through use of an in-line cooling coil. All materials in contact with the solution were glass, quartz, stainless steel, viton or teflon.

After the appropriate oxidation times, samples of the treated water were collected in 1-liter amber glass bottles. An untreated sample was also collected in the same way. These samples were shipped to Golden State Analytical in Van Nuys, California for PCB analyses.

3.0 TESTING RESULTS

Four perox-pure™ treatment tests were performed on the contaminated surface water. These tests were designed to determine the effects of pH adjustment, H_2O_2 dosage, and iron removal efficiency on the rate of PCB destruction. The test conditions are shown in Table 1.

Table 1

Bench-Scale perox-pure™ Treatment Conditions for the Contaminated Surface Water

Test	H2O2 in Solution (mg/l)	Initial pH	Iron Removal* (Method; mg/l)
1	50	4.5	I ; 0.18
2	50	4.9	II ; 2.5
3	50	6.8	I ; 0.25
4	25	5.3	I ; 0.18

* Method I - Addition of 50 mg/l of H_2O_2, followed by filtration through 5 μ media.
Method 2 - Filtration through 5 μ media.
mg/l = Iron concentration after filtration.

The analytical results for the four tests are shown in Table 2. The analytical reports are provided in Appendix A. The results for Test 1 demonstrate rapid destruction of the PCBs to below the 5 μg/l analytical detection limit. Although the PCB concentration was below the detection limit in every treated sample from Tests 2, 3, and 4, the influent PCB concentration for these tests was either unknown or below the detection limit as well. Thus, it is not possible to evaluate the effects of the test variables.

One possible explanation for the variation in PCB concentration in the influent surface water samples is the affinity of PCBs for adsorption onto solids. Test 1 was performed on the same day the surface water samples arrived at the PSI lab. Tests 2, 3, and 4 were conducted three days later after the analytical results from Test 1 had been evaluated. During the time between the treatment tests, it is possible that the PCBs adhered to the surface of the suspended solids in the surface water and were subsequently removed during filtration.

Because of the minimum amount of treatability information received from this study, the projection of full-scale perox-pure™ treatment conditions is difficult for the contaminated surface water. Therefore, PCB destruction rate data from previous perox-pure™ treatability studies conducted by PSI on similar water samples will be used in addition to the rate data from Test 1.

Table 2

Bench-Scale perox-pure™ Treatment Results for the Contaminated Surface Water

Test	Full-Scale Oxidation Time (min)	PCBs (µg/l)
1	0	57
	1.5	<5
	3.0	<5
	6.0	<5
2	0	NA*
	0.5	<5
	1.0	<5
3	0	NA
	0.5	<5
	1.0	<5
4	0	<5
	0.5	<5
	1.0	<5

* Not analyzed.

GOLDEN STATE
Analytical Services, Inc.
15735-1 Strathern St. • Van Nuys • CA 91406
Tel: (818) 376-1122 • Fax: (818) 781-8128

Client:	Peroxidation Systems, Inc.	Matrix:	Water
Project Name:	ERM N.E.	Date Received:	02/04/91
Project#:	N/A	Date Analyzed:	02/06/91
P.O.#:	N/A	GSAS Job#:	6234

PCBs (608)
ug/L (ppb)

Client Sample#:	ENE 2-1	ENE 2-2	ENE 3-1	Reporting
GSAS Sample#:	GS-0291-004	GS-0291-005	GS-0291-006	Limits
PCB - 1016	BRL	BRL	BRL	5.0
PCB - 1221	BRL	BRL	BRL	5.0
PCB - 1232	BRL	BRL	BRL	5.0
PCB - 1242	BRL	BRL	BRL	5.0
PCB - 1248	BRL	BRL	BRL	5.0
PCB - 1254	BRL	BRL	BRL	5.0
PCB - 1260	BRL	BRL	BRL	5.0

BRL: Below Reporting Limit

Approved By: Dr. B. Gene Bennett

Dr. B. Gene Bennett

GOLDEN STATE
Analytical Services, Inc.
15735-1 Strathern St. • Van Nuys • CA 91406
Tel: (818) 376-1122 • Fax: (818) 781-8128

Client:	Peroxidation Systems, Inc.	Matrix:	Liquid
Project Name:	ERM N.E.	Date Received:	01/30/91
Project#:	N/A	Date Analyzed:	01/30-31/91
P.O.#:	N/A	GSAS Job#:	6221

PCBs (608)
ug/L (ppb)

Client Sample#:	ENE 1-2	ENE 1-3	Reporting
GSAS Sample#:	GS-0191-844	GS-0191-845	Limits
PCB - 1016	BRL	BRL	5.0
PCB - 1221	BRL	BRL	5.0
PCB - 1232	BRL	BRL	5.0
PCB - 1242	BRL	BRL	5.0
PCB - 1248	BRL	BRL	5.0
PCB - 1254	BRL	BRL	5.0
PCB - 1260	BRL	BRL	5.0

BRL: Below Reporting Limit

Approved By: Dr. B. Gene Bennett

B. Gene Bennett

GOLDEN STATE
Analytical Services, Inc.
15735-1 Strathern St. • Van Nuys • CA 91406
Tel: (818) 376-1122 • Fax: (818) 781-8128

Client:	Peroxidation Systems, Inc.	Matrix:	Liquid
Project Name:	ERM N.E.	Date Received:	01/30/91
Project#:	N/A	Date Analyzed:	01/30-31/91
P.O.#:	N/A	GSAS Job#:	6221

PCBs (608)
ug/L (ppb)

Client Sample#:	ENE RAW	ENE 1-0	ENE 1-1	Reporting
GSAS Sample#:	GS-0191-841	GS-0191-842	GS-0191-843	Limits
PCB - 1016	BRL	BRL	BRL	5.0
PCB - 1221	BRL	BRL	BRL	5.0
PCB - 1232	80	57	BRL	5.0
PCB - 1242	BRL	BRL	BRL	5.0
PCB - 1248	BRL	BRL	BRL	5.0
PCB - 1254	BRL	BRL	BRL	5.0
PCB - 1260	BRL	BRL	BRL	5.0

BRL: Below Reporting Limit

Approved By: Dr. B. Gene Bennett

B. Gene Bennett

GOLDEN STATE
Analytical Services, Inc.
15735-1 Strathern St. • Van Nuys • CA 91406
Tel: (818) 376-1122 • Fax: (818) 781-8128

Client:	Peroxidation Systems, Inc.	Matrix:	Water
Project Name:	ERM N.E.	Date Received:	02/04/91
Project#:	N/A	Date Analyzed:	02/06/91
P.O.#:	N/A	GSAS Job#:	6234

PCBs (608)
ug/L (ppb)

Client Sample#:	ENE 3-2	ENE 4-0	ENE 4-1	Reporting
GSAS Sample#:	GS-0291-007	GS-0291-008	GS-0291-009	Limits
PCB - 1016	BRL	BRL	BRL	5.0
PCB - 1221	BRL	BRL	BRL	5.0
PCB - 1232	BRL	BRL	BRL	5.0
PCB - 1242	BRL	BRL	BRL	5.0
PCB - 1248	BRL	BRL	BRL	5.0
PCB - 1254	BRL	BRL	BRL	5.0
PCB - 1260	BRL	BRL	BRL	5.0

BRL: Below Reporting Limit

Approved By: Dr. B. Gene Bennett

B. G. Bennett

GOLDEN STATE
Analytical Services, Inc.
15735-1 Strathern St. • Van Nuys • CA 91406
Tel: (818) 376-1122 • Fax: (818) 781-8128

Client:	Peroxidation Systems, Inc.	Matrix:	Water
Project Name:	ERM N.E.	Date Received:	02/04/91
Project#:	N/A	Date Analyzed:	02/06/91
P.O.#:	N/A	GSAS Job#:	6234

PCBs (608)
ug/L (ppb)

Client Sample#:	ENE 4-2	Reporting Limits
GSAS Sample#:	GS-0291-010	
PCB - 1016	BRL	5.0
PCB - 1221	BRL	5.0
PCB - 1232	BRL	5.0
PCB - 1242	BRL	5.0
PCB - 1248	BRL	5.0
PCB - 1254	BRL	5.0
PCB - 1260	BRL	5.0

BRL: Below Reporting Limit

Approved By: Dr. B. Gene Bennett

Dr. B. Gene Bennett

MODULAR TREATMENT SYSTEMS

MODEL CW-360

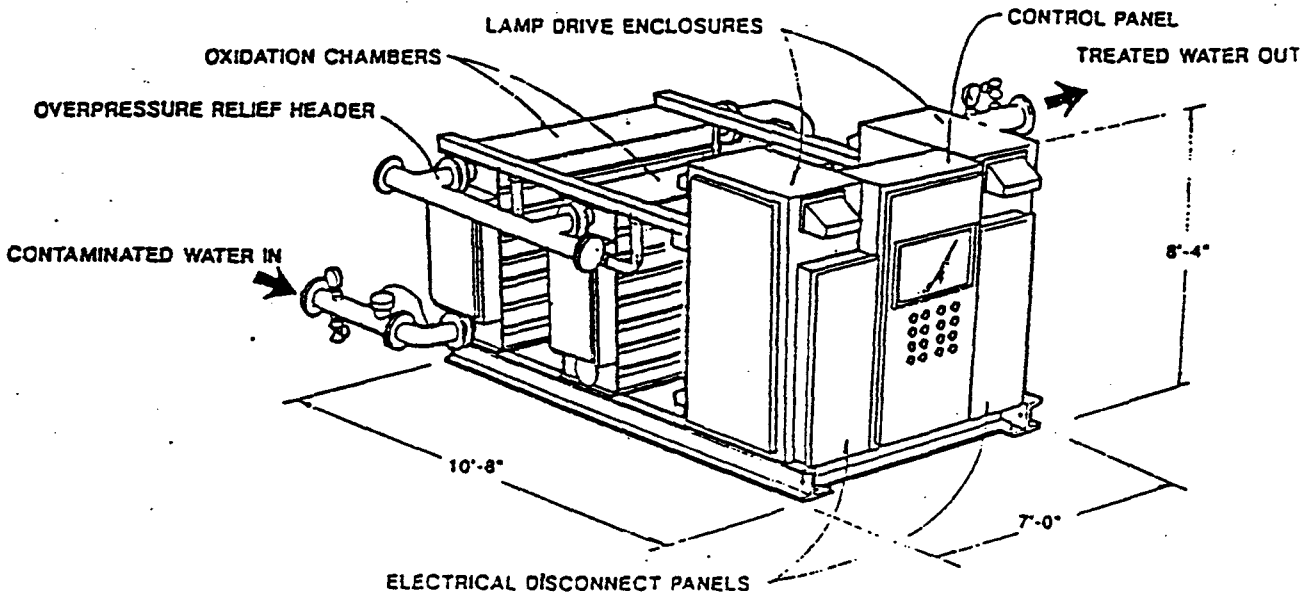

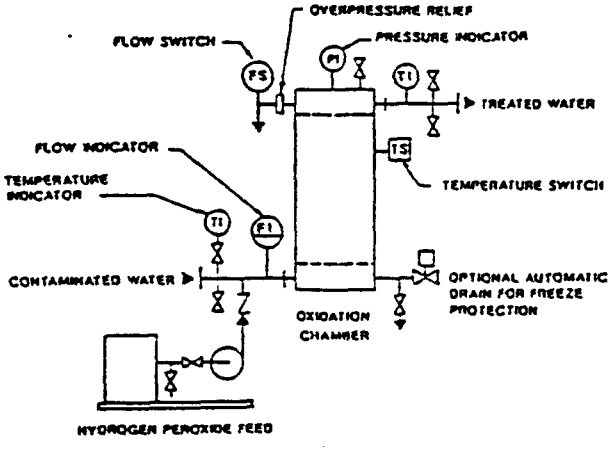

SPECIFICATIONS	Model CW-360	
Flow Rate: Maximum	250 gpm	1000 gpm
Connections:	150# Flange	150# Flange
Inlet:	3"	6"
Outlet:	4"	6"
Power Supply:	3 pH/60Hz/480V, 360KW, 480 Amps	
Electrical Encl.:	NEMA 3R	
Material - Wetted Parts:	316 SS, Quartz, Fluoroelastomers, TFE	
External Parts:	Enameled Steel	
Weight - Shipping:	12500 lbs.	
Operating:	17900 lbs.	

The perox-pure™ chemical oxidation system consists of modular equipment designed to treat water contaminated by dissolved organic materials. Bench-scale process evaluations will determine the oxidation time necessary for the treatment level desired and whether pretreatment of the water is necessary. Full-scale oxidation chamber size and the number of lamps are then selected.

The oxidation chamber is stainless steel. Lamps are horizontally mounted in quartz sleeves with fluoroelastomer seals. Indicators are provided to monitor performance of each lamp. Safety features include shop-wired and tested control panels interlocked with temperature and flow switches to shut off power at preset conditions.

The perox-pure™ system and its components are covered by numerous issued and pending patents.

Peroxidation Systems Inc.

5151 E. Broadway, Suite 600 Tucson, Arizona 85711 602-790-0303 FAX 602-790-0000

FWENC WTP Performance Tests (May 1999)

CALGON

CALGON CARBON CORPORATION

FAX

To:	Jim Brinkman Foster Wheeler Environmental @ 617-457-8498
From:	Daniel J. Dolan
Date:	June 30, 1999
Pages:	4 (including cover page)

Subject: Design Test Summary

Jim,

Further to your call to Mike Donaway, please find attached copy of the fax which I sent to Ian Osgerby which summarizes our findings based on the treatment data and our analysis of the water. Although the slowing of PCB destruction at low levels (especially below 0.2 ppb) is obvious in Figure 1, the explanation for this occurrence is less clear. Based on our initial characterization of the sample and historical data which Foster Wheeler has provided us with, we feel that the interfering mechanism may be related to fine solids (perhaps colloidal iron) in the water matrix. Binding of the PCB's with solids is the most likely reason for such a dramatic slowing of the treatment rate.

I trust this is helpful. Feel free to contact Mike Donaway at 732-424-2089, or myself at the number below should you have any questions.

Regards,
CALGON CARBON CANADA, INC.
per:

Dan Dolan, P.Eng.
Applications Engineer
Phone: 905-477-9242 X326
Fax: 905-477-4511

CALGON

CALGON CARBON CORPORATION

FAX

To:	Ian Osgerby NAE @ 978-318-8663
From:	Daniel J. Dolan
Date:	June 18, 1999
Pages:	3 (including cover page)

Subject: Comments Regarding UV/Oxidation Design Test

Ian,

Per your voice mail messages and discussions with Mike Donaway, I have attempted to provide you with a brief summary of our findings, conclusions and recommendations from the recently conducted design test. We can discuss the results in more detail as a group in a conference call at your earliest convenenience. In the meantime, I thought that this summary would be useful to you.

P-1042 NBH Test Summary:

- Per a previous voice mail from you, Foster Wheeler apparently had a filtered (0.45um) and unfiltered sample analyzed for PCBs, giving concentrations of 15.4 and 10.9 ppb, respectively. This implies that some solids may be present and responsible for some PCB complexing, but, the majority of PCB's are still present in filtered water (as you eluded to in your message). This means that if there is a solids adsorption problem at the very low PCB levels (< 0.2 ppb), then the solids are likely colloidal.

- Our 'as received' water showed no visible TSS. A UV absorbance scan of the initial Run 1 and Run 2 waters, unfiltered and filtered with a 0.45 um gave virtually identical absorbance scans. This also indicates that there were no suspended solids present.

- Our preliminary analysis showed non-detect iron, but the MDL in our laboratory is no less than 1 ppm. Based on recent data obtained from FW from this site, iron may be present in the 100 ppb to 400 ppb range.

- Modeling of the NBH water showed the optimum 'economical' peroxide dose to be 50 ppm, while the highest treatment efficiency was associated w/ 100 ppm peroxide. We feel that this provided a suitable peroxide dose range for testing.

- As shown in the attached destruction curve (Figure 1), significant levelling-off (slowing of treatment rate) was observed in the Run 1 and 2 results.

Previous Laboratory Test Results:

- We have seen similar results with a previous water, where the initial rapid treatment of PCBs levelled off in the 0.1 to 0.2 ppb range at neutral pH. That particular water was known to contain about 7 ppm iron in the raw sample. The water used for testing was actually decanted from the original sample. As such, we would expect the iron to be at much lower concentration, but still present nevertheless. It is possible that this iron was colloidal, which would be attracted to low level PCBs. At that time, we felt that adsorption onto fine solids was responsible for the PCB slowing. If the slowing mechanism was byproduct competition for example, the co-contaminant VOC's should have slowed as well (which we did not see). Granted, VOC's didn't have to be treated to as low as the PCBs and the MDL for VOCs is an order of magnitude higher.

- When we repeated the test at pH 3, we found non-detect levels of PCBs in all intermediate and final samples (0.02 ppb detection limit). The best explanation for this pH effect is that we are solubilizing fine solids at low pH. The most obvious suspect therefore would be fine colloidal iron. Theoretically, if we solubilize this iron at pH 3, then the PCBs will remain in solution and be readily treated, as the data from this past run would indicate.

Conclusions:

- The data suggests that PCBs are adhering to fine solids in the water, possibly colloidal iron.

- At this level of chloride, we are likely losing a lot of hydroxyl radicals to the reaction with chloride. Lowering the pH increases the chloride interference, especially down around pH 3. BUT, it is possible that the process limiting factor is fine solids (ie., colloidal iron) and NOT hydroxyl radical scavenging by chloride.

- While low iron levels (< 1 ppm) are not normally thought of as interfering, it is quite possibly that ppb colloidal iron levels will significantly hinder treatment of low level PCB's, especially below 0.2 ppb where treatment appeared to flatten.

Recommendation:

- Perhaps a higher effluent limit for Arochlor 1242 could be negotiated (e.g., 0.2 to 0.5 ppb PCBs would be more easily achieved).

- Perhaps we could conduct another UV/50 ppm peroxide test at pH 3. This may help prove/disprove the above theory of colloidal iron complexing at neutral pH. If we were to further consider a pH 3 run, we will need to consider the implications of pH 3 test at full scale, given the high chlorides (i.e., corrosion concerns, pH adjustment costs, etc.). The full-scale system can be provided with corrosion resistant materials.

Regards,
CALGON CARBON CANADA, INC.
per:

Dan Dolan, P.Eng.
Applications Engineer
Phone: 905-477-9242 X326
Fax: 905-477-4511

Figure 1. Destruction of Arochlor 1242 in New Bedford Harbor Water

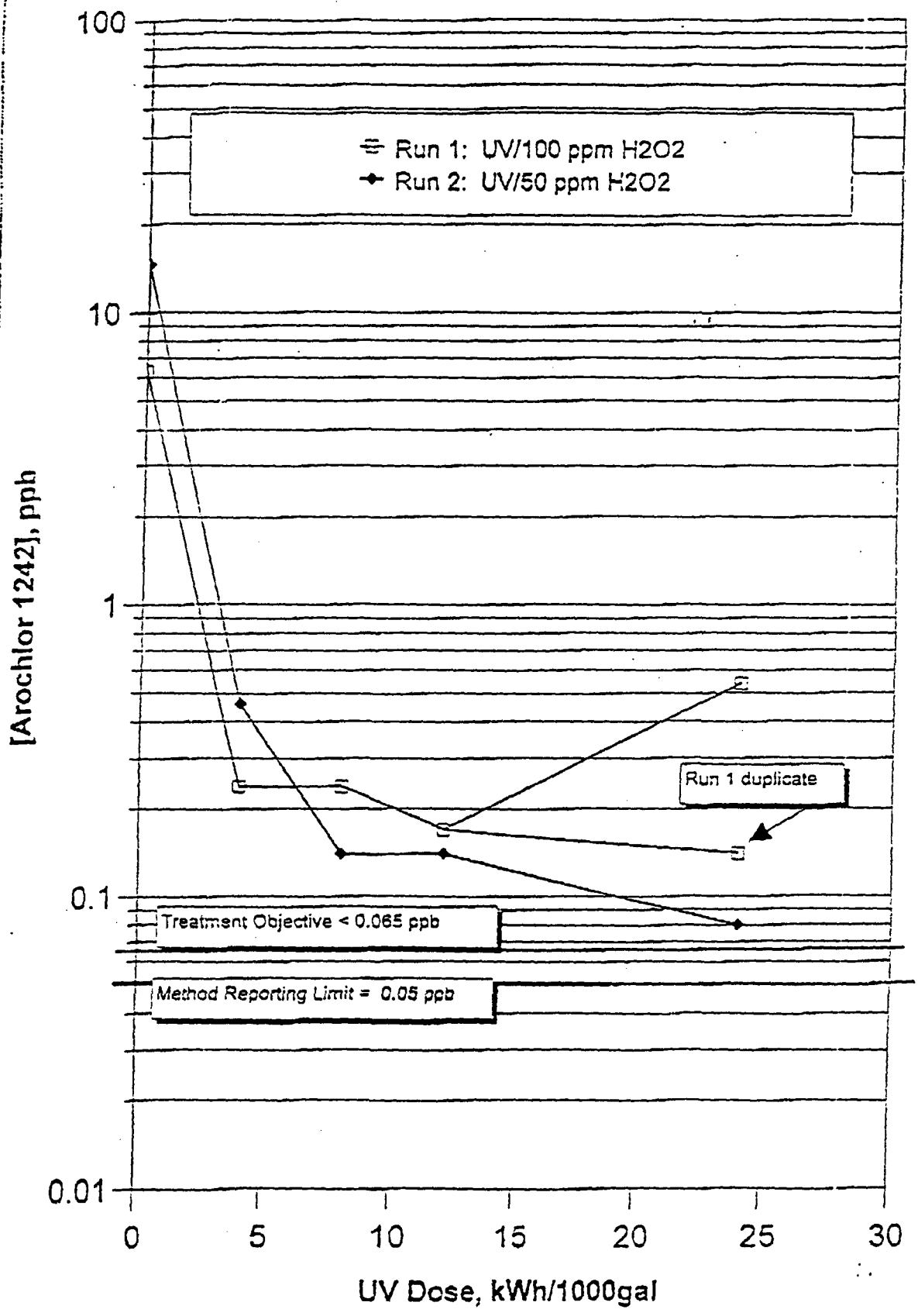

FWENC Treatability Studies (November 1999)

[Preliminary results are included]

CALGON

CALGON CARBON CORPORATION

FAX

To:	Jim Brinkman Foster Wheeler Environmental @ 617-457-8498
From:	Daniel J. Dolan
Date:	November 30, 1999
Pages:	3 (including cover page)

Subject: Preliminary Results from Design Testing of Dredge Water

Jim,

I received the data this morning by fax and have graphed the destruction curves for Arochlor-1248 and 1254, which were present in similar concentrations (see attached). These two PCBs were present at initial concentrations between about 0.6 and 0.8 ppb, which is about an order of magnitude lower than we expected based on previous conversations. This has implications on the full scale system sizing and performance guarantee, since this data cannot be directly extrapolated to a higher initial concentration.

A UV dose of 24 kWh/1000gal (last data point) is approximately equivalent to a 540 kW system at 350 USgpm. Based on the results as shown in Fig. 1, this system would treat each of the identified PCBs down to below the 0.065 ppb treament objective, assuming an initial concentration in the same range at full scale (i.e., roughly 0.6 to 0.8 ppb).

As expected, the initial rate of reaction was much slower than previous testing. This is due to the fact that the dredge water contained a higher UV absorbance, COD, and solids content than the previous white water which was tested. However, the levelling off of treatment was less severe in the recent dredge water tests.

I trust this information is helpful. We will need to further discuss the results of this testing and your full scale treament requirements in order to determine full-scale system sizing. Please contact Mike Donaway after you have had a chance to review these results.

Regards,
CALGON CARBON CORP.
per:

Dan Dolan, P.Eng.
Applications Engineer
Phone: 905-477-9242 X326
Fax: 905-477-4511

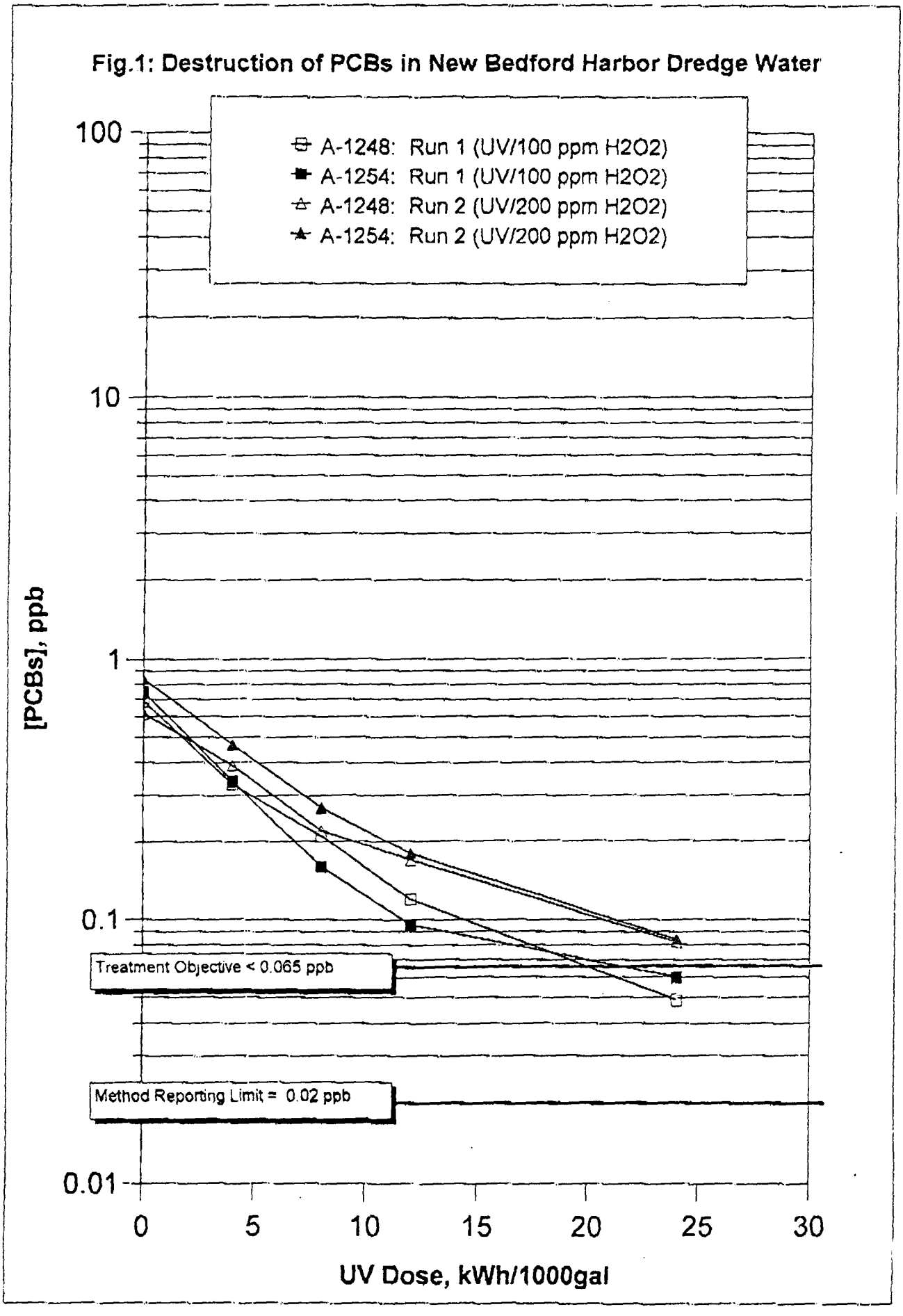
Fig.1: Destruction of PCBs in New Bedford Harbor Dredge Water
A-1248: Run 1 (UV/100 ppm H2O2)
A-1254: Run 1 (UV/100 ppm H2O2)
A-1248: Run 2 (UV/200 ppm H2O2)
A-1254: Run 2 (UV/200 ppm H2O2)
100
10
1
0.1
0.01
[PCBs], ppb
Treatment Objective < 0.065 ppb
Method Reporting Limit = 0.02 ppb
0
5
10
15
20
25
30
UV Dose, kWh/1000gal

APPENDIX C

Hot Spot WTP Operations Effluent Data (April 1994 to September 1995)

Existing WTP EFFLUENT DATA (OU #2)- 1994/95

New Bedford Harbor Superfund Site
New Bedford, Massachusetts

Date	Cd	Cr	Cu	Cu (Sol)	Pb(Total)	Pb(Sol.)	Remarks
4/29/94	5.0 U	3.5 J	7.7 J		3		
4/30/94	5.0 U	3.5 U	12		2.0 J		
5/1/94	1.4 J	10.0 U	9.2		0.9 J		
5/2/94	5.0 U	10.0 U	15		2.4		
5/3/94	5.0 U	10.0 U	13		0.9 J		
5/4/94	1.9 J	10.0 U	14		2.5 J		
5/5/94	1.7 J	10.0 U	12		1.9 J		
5/6/94	1.0 J	10.0 U	13		2.4 J		
5/13/94	5.0 U	10.0 U	6.6 J		3.0 U		COMPOSITE
"	5.0 U	10.0 U	7.1 J		3.0 U		GRAB
5/14/94	5.0 U	10.0 U	7.8 J		2.5 J		
5/12/94	2.1 J	10.0 U	9.4		3.0 U		
5/18/94	5.0 U	10.0 U	15		3.0 U		
5/20/94	0.9 J	10.0 U	11		3.0 U		
5/27/94	5.0 U	10.0 U	12		3.0 U		
6/2/94	1.6 J	10.0 U	9.1		4.5		
6/5/94	1.1 J	10.0 U	2.6 J		3.0 U		
6/10/94	1.1 J	10.0 U	8.0 U		6.0 U		
6/17/94	3.4 J	10.0 U	4.0 J		15.0 U		
6/14/94	2.4 J	10.0 U	9.5		6.0 J		
6/21/94	1.8 J	10.0 U	4.7 J		6.4 J		
6/25/94	3.0 J	2.5 J	8.1		10		
7/2/94	2.4 J	10.0 U	1.9 J		4.7		
7/11/94	2.7 J	10.0 U	5.5 J		2.9 J		
7/30/94	1.1 J	10.0 U	8.0 U		2.1 J		
8/10/94	2.5 J	10.0 U	5.0 J		3.7		
8/12/94	1.4 J	10.0 U	8.0 U		2.2 J		
8/14/94	1.6 J	10.0 U	3.3 J		0.7 J		
8/17/94	3.4 J	10.0 U	2.6 J		2.5 J		
8/19/94	2.4 J	10.0 U	8.0 U		3.7		20 HOUR COMP. SAMPLE W/2 MICRON FILTERS
"	2.7 J	10.0 U	8.0 U		2.2 J		9 HOUR COMP. SAMPLE W/7 MICRON FILTERS
"	1.8 J	10.0 U	4.2 J		2.2 J		SAND FILTER EFFLUENT-GRAB SAMPLE
8/23/94	2.9 J	10.0 U	8.0 U		1.5 J		
8/25/94	3.1 J	3.5 J	4.3 J		3.0 U		
8/27/94	4.0 J	10.0 U	3.6 J		1.6 J		
8/29/94	1.4 J	10.0 U	5.1 J		2.2 J		
8/31/94	1.1 J	5.1 J	40		0.81 J		
9/2/94	2.9 J	10.0 U	14		1.3 J		
9/4/94	2.6 J	10.0 U	16		2.6 J		
8/31/94			8.0 U				GRAB SAMPLE OF COPPER ONLY
9/8/94	1.4 J	10.0 U	2.2 J		3.8		
9/10/94	2.9 J	10.0 U	2.9 J		2.9 J		
9/11/94			3.5 J	4.1 J			GRAB SAMPLE AT POINT 12 FOR COPPER ONLY
9/9/94			5.2 J	4.1 J			GRAB SAMPLE AT POINT 12 FOR COPPER ONLY
9/12/94	2.8 J	10.0 U	8.0 U		2.6 J		
9/14/94	2.3 J	10.0 U	8.0 U		0.78 J		
9/18/94	2.8 J	10.0 U	8.0 U		3.0 U		
9/16/94	2.7 J	10.0 U	8.0 U		1.6 J		
9/21/94	1.8 J	2.6 J	2.2 J		0.73 J		
9/23/94	2.2 J	10.0 U	8.0 U		3.0 U		

Existing WTP EFFLUENT DATA (OU #2)- 1994/95

New Bedford Harbor Superfund Site

New Bedford, Massachusetts

Date	Cd	Cr	Cu	Cu (Sol)	Pb(Total)	Pb(Sol.)	Remarks
9/26/94	2.7 J	10.0 U	8.0 U		2.2 J		
9/28/94	3.4 J	10.0 U	2.9 J		1.9 J		
9/30/94	2.3 J	10.0 U	3.7 J		1.0 J		
10/2/94	4.1 J	10.0 U	3.4 J		1.0 J		
10/4/94	2.1 J	10.0 U	13		0.75 J		
10/10/94	2.1 J	10.0 U	8.0 U		3.0 U		
10/14/94	1.4 J	10.0 U	4.4 J		2.0 J		
10/19/94	2.6 J	10.0 U	8.0 U		0.91 J		
10/21/94	2.3 J	10.0 U	6.2 J		2.3 J		
10/25/94	3.1 J	2.8 J	5.6 J		1.1 J		
10/29/94	3.5 J	10.0 U	8.0 U		1.4 J		
10/12/94	2.5 J	10.0 U	8.0 U		0.59 J		
10/16/94	3.2 J	10.0 U	3.0 J		3.0 U		
10/23/94	3.1 J	10.0 U	8.0 U		4.4		
10/27/94	2.5 J	10.0 U	8.0 U		1.1 J		
11/2/94	3.0 J	10.0 U	8.0 U		1.5 J		
11/6/94	3.3 J	10.0 U	3.2 J		1.6 J		
11/4/94	1.3 J	10.0 U	3.5 J		3.0 U		
11/10/94	3.2 J	10.0 U	5.3 J		2.6 J		
10/31/94	3.5 J	28	8.0 U		0.62 J		
11/12/94	4.4 J	45	5.2		3.3		
11/17/94	3.3 J	12	8.0 U		2.5 J		
11/18/94	2.9 J	10.0 U	7.3 J		2.8 J		
11/19/94	2.2 J	10.0 U	8.0 U		6.4		
11/26/94	3.9 J	10.0 U	8.0 U		8.5		
11/28/94	3.8 J	10.0 U	8.0 U		6.1		
11/30/94	3.3 J	10.0 U	8.0 U		7.1		
12/2/94	1.0 J	10.0 U	3.0 J		6.2		
12/4/94	3.5 J	10.0 U	11		12		
12/6/94	3.3 J	10.0 U	8.0 U		11		
12/8/94	5.0 U	10.0 U	6.9 J		4.8		
12/10/94	2.6 J	10.0 U	4.3 J		14		
12/13/94					8.3	3.6	LEAD ONLY
12/15/94	5.0 U	3.1 J	8.0 U		4.8	3.4	
12/17/94	2.5 J	10.0 U	6.2 J		10	7.4	
12/20/94	2.4 J	10.0 U	2.8 J		9.3	5.2	
12/22/94	1.9 J	10.0 U	13		16	9	
12/28/94	1.6 J	10.0 U	4.2 J		5.1	2.7	
12/31/94	2.1 J	10.0 U	8.0 U		4.5	2.6	
12/26/94	3.2 J	10.0 U	6.0 J		4.9	2.0 J	
1/19/95	5.0 U	4.6 J	8.0 U		4.5	2.6	
1/5/95	2.3 J	10.0 U	9.1		10	5.4	
1/21/95	5.0 U	10.0 U	8.0 U		3.5	3	
1/27/95	1.3 J	10.0.U	8.0 U		5.1	2.9	
1/17/95	1.1 J	6.6 J	9.4 J		3.8	2.5 J	
2/4/95						3.8	LEAD ONLY, 10 MICRON FILTERS
2/6/95	3.8 J	10.0 U	8.0 U		4.6	2.4	
1/25/95	2.0 J	10.0 U	6.5 J		1.4 J	1.4 J	
1/30/95	2.0 J	10.0 U	5.4 J		5.9	2.4	
2/2/95	2.5 J	10.0 U	5.8 J		6.1		
2/23/95	1.2 J	10.0 U	4.9 J		4.3		
2/27/95	1.7 J	10.0 U	4.3 J		2.4 J		

Existing WTP EFFLUENT DATA (OU #2)- 1994/95

New Bedford Harbor Superfund Site
New Bedford, Massachusetts

Date	Cd	Cr	Cu	Cu (Sol)	Pb(Total)	Pb(Sol.)	Remarks
3/5/95	2.8 J	7.4 J	5.6 J		10		
3/11/95	1.1 J	10.0 U	5.7 J		2.4 J		
3/2/95	1.6 J	10.0 U	11		8		
3/14/95	1.7 J	10.0 U	4.3 J		4		
3/17/95	1.4 J	10.0 U	7.0 J		1.3 J		
3/25/95	1.8 J	10.0 U	2.8 J		1.5 J		
3/30/95	5.0 U	10.0 U	8.0 U		3.0 U		
4/3/95	1.3 J	10.0 U	8.0 U		3		
4/6/95	3.0 J	10.0 U	1.5 J		3.1		
3/23/95	5.0 U	10.0 U	3.3 J		4		
4/11/95	2.1 J	10.0 U	8.0 U		0.96 J		
4/1/95	2.3 J	10.0 U	8.0 U		3.0 U		
4/15/95	1.8 J	10.0 U	2.8 J		3.3		
4/18/95	2.4 J	10.0 U	6.2 J		6.1		
4/20/95	1.1 J	10.0 U	8.0 U		3		
4/24/95	4.8 J	10.0 U	8.0 U		4.6		
4/26/95	3.1 J	10.0 U	2.3 J		8.3		
4/28/95	2.7 J	10.0 U	8.0 U		1.3 J		
5/2/95	2.0 J	10.0 U	4.5 J		4.3		
5/4/95	2.6 J	10.0 U	2.4 J		4		
5/7/95	2.8 J	10.0 U	3.3 J		3.5		
5/11/95	1.2 J	10.0 U	13		4		
5/13/95	2.2 J	2.8 J	8.0 U		3.2		
5/15/95	2.9 J	2.3 J	2.3 J		6.2		
5/17/95	2.4 J	10.0 U	1.6 J		6.4		
5/19/95	2.5 J	10.0 U	1.8 J		5.7		
5/21/95	1.6 J	1.3 J	1.7 J		2.4 J		
5/30/95	2.5 J	2.6 J	3.4 J		1.3 J		
6/2/95	5.0 U	10.0 U	3.8 J		1.4 J		
6/4/95	5.0 U	10.0 U	8.0 U		5.7		
6/7/95	2.0 J	6.1 J	6.9 J		4.4		
6/9/95	5.0 U	10.0 U	3.4 J		4.3		
6/13/95	5.0 U	10.0 U	10		7.7		
6/16/95	5.0 U	10.0 U	6.6 J		7.5		
6/18/95	3.2 J	10.0 U	4.3 J		6.7		
6/21/95	2.1 J	10.0 U	6.2 J		3.2		
6/23/95	1.5 J	10.0 U	6.4 J		5.5		
6/25/99	3.2 J	7.0 J	4.0 J		2.9 J		
6/29/95	5.0 U	10.0 U	8.0 U		3.1		
7/1/95	5.0 U	10.0 U	8.0 U		3.0 U		
7/3/95	1.4 J	10.0 U	8.0 U		0.78 J		
7/7/95	5.0 U	10.0 U	8.0 U		6.8		
7/9/95	1.8 J	10.0 U	8.0 U		2.8 J		
7/12/95	2.7 J	10.0 U	8.0 U		1.5 J		
7/14/95	2.0 J	10.0 U	8.0 U		2.1 J		
7/17/95	2.6 J	3.3 J	8.0 U		5.3		
7/19/95	5.0 U	10.0 U	7.8 J		3.2		
7/21/95	2.5 J	2.8 J	4.2 J		3.0 U		
7/24/95	1.7 U	10.0 U	2.9 J		3.0 U		
7/26/95	2.8 J	10.0 U	8.0 U		0.74 J		
7/29/95	1.5 J	10.0 U	4.2 J		1.6 J		
7/31/95	2.3 J	10.0 U	3.6 J		0.76 J		

Existing WTP EFFLUENT DATA (OU #2)- 1994/95

New Bedford Harbor Superfund Site
New Bedford, Massachusetts

Date	Cd	Cr	Cu	Cu (Sol)	Pb(Total)	Pb(Sol.)	Remarks
8/2/95	2.9 J	10.0 U	8.0 U		0.77 J		
8/4/95	1.5 J	10.0 U	8.0 U		1.6 J		
8/6/95	1.9 J	10.0 U	8.0 U		1.0 J		
8/8/95	5.0 U	2.5 J	8.0 U		1.2 J		
8/10/95	1.6 J	4.7 J	8.0 U		0.8 J		
8/12/95	2.1 J	10.0 U	8.0 U		3.0 U		
8/15/95	5.0 U	10.0 U	8.0 U		3.0 U		
8/17/95	1.8 J	10.0 U	8.0 U		3.0 U		
8/19/95	2.0 J	10.0 U	8.0 U		2.3 J		
8/24/95	1.7 J	10.0 U	8.0 U		4.1		
8/26/95	2.5 J	10.0 U	8.0 U		1.3 J		
8/29/95	3.6 J	10.0 U	8.0 U		1.5 J		
8/31/95	2.4 J	10.0 U	8.0 U		1.8 J		
9/5/95	1.9 J	10.0 U	8.6		1.5 J		
9/8/95	2.6 J	10.0 U	8.0 U		3.0 J		
9/13/95	2.3 J	10.0 U	8.0 U		2.9 J		
9/20/95	5.0 U	10.0 U	8.0 U		3.9		

END OF WATER TREATMENT, PLANT MOTHBALLED

U =Non Detected
J =Estimated Value

APPENDIX D

Foster Wheeler Environmental Corporation Treatability Studies

FWENC WTP Performance Testing Results (April/May 1999)

TEST DESCRIPTION

440	Test Water Volume
450	1 micron bag filter, 5 micron cartridge filter, UV/Oxidation
460	Sand Filter, 5 micron cartridge filter, UV/Oxidation
470	Alum/Polymer addition, settling basin (Cell #3), 5 micron cartridge filter, UV/Oxidation
510	Performance Test – Test Water Volume
560	Performance Test – WTP as Designed
561	Performance Test – WTP as Designed
562	Performance Test – WTP as Designed
563	Performance Test – WTP as Designed

SAMPLE POINT LOCATIONS

03	WTP Influent
06	Flocculation Tank Effluent
07	Settling Basin Effluent
10A	Bag Filter Effluent
10	Sand Filter Effluent
11	Cartridge Filter Outlet/UV Oxidation Inlet
12A	UV/Oxidation after lamp #4 (9 lamps total)
12B	UV/Oxidation after lamp #7
12C	UV?Oxidation after lamp #9
12	UV/Oxidation effluent

TABLE D-1
Summary of Analytical Data for 400 Series WTP Testing
New Bedford Harbor Superfund Site OU#1

SAMPLE DATE	FWENC I.D. Discharge Limit	PCBs (1242) 0.065 ppb	TSS ppm	Total Metals (ppb) CADMIUM 9.3 ppb	CHROMIUM 50 ppb	COPPER 5.6 ppb	IRON NA	LEAD 8.5 ppb	Dissolved Metals (ppb) CADMIUM NA	CHROMIUM NA	COPPER NA	LEAD NA
4/5/99	WTP-440-03-01	29	7	0.7J	ND	20J	NA	9.9J	2.2J	ND	10J	20J
4/5/99	WTP-440-11-01	22	5	ND	ND	10J	400	6.9J	1.3J	ND	10J	6.3J
4/12/99	WTP-450-10A-01	5.5	12	ND	ND	7.4	NA	9.7	ND	ND	9.2	6.6
4/12/99	WTP-450-11-01	5.59	14	ND	ND	8.8	NA	14.6	ND	ND	11.6	11.2
4/12/99	WTP-450-12-01	0.21	ND	ND	ND	19	NA	20.4	ND	ND	13.5	6.8
4/12/99	WTP-450-12A-01	ND	NA	NA	NA	NA	NA	NA	NA	NA	NA	NA
4/12/99	WTP-450-12B-01	ND	NA	NA	NA	NA	NA	NA	NA	NA	NA	NA
4/13/99	WTP-450-10-02	5.88	19	ND	ND	9.5	NA	11	ND	ND	10.6	11.4
4/13/99	WTP-450-11-02	5.62	17	ND	ND	10.5	NA	11.9	ND	ND	11.3	9.7
4/13/99	WTP-450-12-02	0.24	12	ND	ND	12.2	NA	12	ND	ND	11.3	9.7
4/13/99	WTP-450-12A-02	ND	NA	NA	NA	NA	NA	NA	NA	NA	NA	NA
4/13/99	WTP-450-12B-02	ND	NA	NA	NA	NA	NA	NA	NA	NA	NA	NA
4/13/99	WTP-460-10-01	16.7	15	ND	ND	13.4	NA	7.8	ND	ND	11.5	ND
4/13/99	WTP-460-10-04	ND	ND	ND	ND	ND	NA	6.3	ND	ND	ND	7.3
4/13/99	WTP-460-11-01	22.5	17	ND	ND	13	NA	7	ND	ND	15.6	6.4
4/13/99	WTP-460-12-01	0.52	12	ND	21	16.3	NA	9.3	ND	ND	13.8	ND
4/13/99	WTP-460-12A-01	ND	NA	NA	NA	NA	NA	NA	NA	NA	NA	NA
4/13/99	WTP-460-12B-01	ND	NA	NA	NA	NA	NA	NA	NA	NA	NA	NA
4/14/99	WTP-460-10-02	12.4	18	ND	ND	16.1	NA	7.4	ND	ND	14.7	5.7
4/14/99	WTP-460-10-03	13.9	18	ND	ND	17.9	NA	8.9	ND	ND	17.8	ND
4/14/99	WTP-460-11-02	7.72	15	ND	ND	13.8	NA	7.7	ND	ND	11.2	11.2
4/14/99	WTP-460-12-02	0.28	9	ND	ND	18.9	NA	8.8	ND	ND	29	9.5
4/14/99	WTP-460-12-03	0.51	13	ND	ND	17	NA	10.3	ND	ND	22.2	8.9
4/14/99	WTP-460-12A-02	ND	NA	NA	NA	NA	NA	NA	NA	NA	NA	NA
4/14/99	WTP-460-12B-02	ND	NA	NA	NA	NA	NA	NA	NA	NA	NA	NA
4/14/99	WTP-470-06-01	4.24	13	ND	ND	13.8	NA	5.6	ND	ND	9.6	ND

TABLE D-2
Summary of Analytical Data for 500 Series WTP Testing
New Bedford Harbor Superfund Site OU#1

SAMPLE DATE	FWENC I.D. Discharge Limit	PCBs (1242) 0.065 ppb	TSS ppm	Total Metals (ppb) CADMIUM 9.3 ppb	CHROMIUM 50 ppb	COPPER 5.6 ppb	IRON NA	LEAD 8.5 ppb	Dissolved Metals (ppb) CADMIUM NA	CHROMIUM NA	COPPER NA	IRON NA	LEAD NA
4/16/99	WTP-510-06-12	0.97	NA	NA	NA	NA	NA	NA	NA	NA	NA	NA	NA
4/16/99	WTP-510-06-12A	10.9	NA	NA	NA	NA	NA	NA	NA	NA	NA	NA	NA
4/16/99	WTP-510-06-12B	42.4	NA	NA	NA	NA	NA	NA	NA	NA	NA	NA	NA
4/16/99	WTP-510-06-12C	0.76	NA	NA	NA	NA	NA	NA	NA	NA	NA	NA	NA
4/16/99	WTP-510-11-18	NA	10	NA	NA	NA	NA	NA	ND	ND	9	10	11
4/16/99	WTP-510-6-11	45.6	NA	NA	NA	NA	NA	NA	NA	NA	NA	NA	NA
4/16/99	WTP-510-6-12	0.97	NA	NA	NA	NA	NA	NA	NA	NA	NA	NA	NA
4/16/99	WTP-510-6-12A	10.9	NA	NA	NA	NA	NA	NA	NA	NA	NA	NA	NA
4/16/99	WTP-510-6-12B	4.24	NA	NA	NA	NA	NA	NA	NA	NA	NA	NA	NA
4/16/99	WTP-510-6-12C	0.76	NA	NA	NA	NA	NA	NA	NA	NA	NA	NA	NA
4/20/99	WTP-510-03-98	NA	200	NA	NA	NA	NA	NA	NA	NA	NA	NA	NA
4/20/99	WTP-510-03-99	117	25	NA	NA	NA	NA	NA	NA	NA	NA	NA	NA
5/7/99	WTP-510-11-01	0.84	NA	NA	NA	NA	NA	NA	NA	NA	NA	NA	NA
5/7/99	WTP-510-12-01	0.5	NA	NA	NA	NA	NA	NA	NA	NA	NA	NA	NA
5/7/99	WTP-510-12B-01	ND	NA	NA	NA	NA	NA	NA	NA	NA	NA	NA	NA
5/13/99	WTP-510-03-01	9460	2120	31	630	1500	NA	951	ND	ND	21	NA	7.1
5/13/99	WTP-510-11-01	325	51	ND	20	55	1500	29	ND	ND	14	200	7.6
5/24/99	WTP-560-24-11	10.9	NA	NA	NA	NA	NA	NA	NA	NA	NA	NA	NA
5/24/99	WTP-560-24-12	0.32	NA	NA	NA	NA	NA	NA	NA	NA	NA	NA	NA
5/24/99	WTP-560-24-12A	ND	NA	NA	NA	NA	NA	NA	NA	NA	NA	NA	NA
5/24/99	WTP-560-24-12B	1.41	NA	NA	NA	NA	NA	NA	NA	NA	NA	NA	NA
5/24/99	WTP-560-24-12C	0.31	NA	NA	NA	NA	NA	NA	NA	NA	NA	NA	NA
5/25/99	WTP-510-06-11	45.6	NA	NA	NA	NA	NA	NA	NA	NA	NA	NA	NA
5/25/99	WTP-561-03-01	125	NA	NA	NA	NA	NA	NA	NA	NA	NA	NA	NA
5/25/99	WTP-561-06-01	109	NA	NA	NA	NA	NA	NA	NA	NA	NA	NA	NA
5/25/99	WTP-562-03-01	193	NA	NA	NA	NA	NA	NA	NA	NA	NA	NA	NA
5/25/99	WTP-562-06-01	649	NA	NA	NA	NA	NA	NA	NA	NA	NA	NA	NA

TABLE D-2
Summary of Analytical Data for 500 Series WTP Testing
New Bedford Harbor Superfund Site OU#1

SAMPLE DATE	FWENC I.D. Discharge Limit	PCBs (1242) 0.065 ppb	TSS ppm	Total Metals (ppb) CADMIUM 9.3 ppb	CHROMIUM 50 ppb	COPPER 5.6 ppb	IRON NA	LEAD 8.5 ppb	Dissolved Metals (ppb) CADMIUM NA	CHROMIUM NA	COPPER NA	IRON NA	LEAD NA
5/26/99	WTP-563-03-01	1940	1740	60	970	2530	NA	1400	ND	ND	13	NA	ND
5/26/99	WTP-563-06-01	2150	1370	20	380	1000	NA	600	ND	ND	6	NA	ND
5/26/99	WTP-563-07-01	216	15	ND	ND	12	NA	6	ND	ND	ND	NA	ND
5/26/99	WTP-563-10-01	78.7	12	ND	ND	13	NA	ND	ND	ND	12	NA	ND
5/26/99	WTP-563-11-01	41	8	ND	ND	9	NA	9	ND	ND	6	NA	ND
5/26/99	WTP-563-12-01	0.67	8	ND	ND	15	NA	ND	ND	ND	6	NA	ND
5/26/99	WTP-563-12A-01	1.62	NA	NA	NA	NA	NA	NA	NA	NA	NA	NA	NA
5/26/99	WTP-563-12B-01	1.93	NA	NA	NA	NA	NA	NA	NA	NA	NA	NA	NA
5/26/99	WTP-563-12C-01	0.99	NA	NA	NA	NA	NA	NA	NA	NA	NA	NA	NA

Table D-3
Summary of Analytical Data for UV/Oxidation Testing
New Bedford Harbor Superfund Site OU#1

SAMPLE DATE	FWENC I.D.	TOC	pH	Salinity	Alkalinity	Bromide	COD	Chloride	Nitrate	Total Iron
4/5/99	WTP-440-03-01	NA	8.02	2.4	NA	NA	NA	NA	NA	NA
4/5/99	WTP-440-11-01	13.9	7.97	NA	128	3.1	62	1143	0.02	NA
4/14/99	WTP-510-11-18	14.9	NA	NA	109	2.6	68	1350	0.02	NA
5/13/99	WTP-510-03-01	NA	7.65	2.5	NA	NA	NA	NA	NA	NA
5/13/99	WTP-510-11-01	12.8	NA	NA	119	3.6	ND	1360	0.02	NA

FWENC Treatability Studies Results and Conclusions (November 1999)

[Final results, conclusions and recommendations to be provide once the treatability studies have been completed]

APPENDIX E

Water/Sediment Mass Balance Calculations

[Water/sediment mass balance calculations will be updated once final dredging technology (ies) have been selected]

SEDIMENT AND WATER TREATMENT BALANCE - Two Dredges, 16 Hours Total Dredge Time

Assumptions:

In-Situ Conditions

- Sediment water content = 1.2
- % Solids (By Volume) = 25.9
- Sediment/solids specific gravity = 2.5
- Seawater specific gravity = 1.025
- In-situ sediment specific gravity = 1.4

Dredging

- Two dredges with 10 inch discharge piping will be utilized
- Dredge rate is 2,100 gpm per dredge (8.6 ft/sec discharge velocity)
- Each dredge will operate for two 4 hour shifts per day for a total of 16 hours of dredging per day
- Dredging time is actual pumping time which is typically 75% of a working shift
- Dredging will be conducted 6 days per week
- Water treatment will be conducted continuously 7 days per week, 24 hours per day
- Assume all water is readily available for treatment

% Solids of Slurry (By Volume)	% Solids of Slurry (By Weight)	Slurry Specific Gravity	Dredging Production Rate (yd^3/hr, In-situ sediment)	Solids Discharge Rate (yd^3/day)	Water Discharge Rate (gpm)	Required Water Treatment Capacity (gpm)
2.15	5.10	1.06	52	215	2,055	1,174
5	11.40	1.10	120	499	1,995	1,140
10	21.30	1.17	241	998	1,890	1,080
20	37.90	1.32	482	1996	1,680	960

Mass Balance for One Hour of Dredging

% Solids (by Volume)	Solids Volume (yd^3)[1]	Water Volume (yd^3)[1]	Wt of Solids (lbs)[2]	Wt of Water (lbs)[3]	% Solids (by weight)
2.1	13.2	610.7	55459.1	1052864.3	5.0
2.2	13.4	610.4	56403.5	1052477.1	5.1
4.4	27.2	596.7	114250.0	1028760.1	10.0
5.0	31.2	592.7	131171.0	1021822.4	11.4
8.7	42.1	581.8	176949.7	1003053.2	15.0
9.3	58.0	565.9	243847.0	975625.3	20.0
10.0	62.4	561.5	262342.1	968042.3	21.3
12.0	75.0	548.8	315466.4	946261.4	25.0
14.9	93.2	530.6	392070.3	914853.8	30.0
15.0	93.6	530.3	393513.1	914262.2	30.1
18.1	112.8	511.0	474445.7	881079.8	35.0
20.0	124.8	499.1	524684.2	860482.1	37.9
21.5	133.9	489.9	563117.3	844724.5	40.0
25.0	156.0	467.9	655855.2	806701.9	44.8
25.1	156.7	467.1	659003.3	805411.2	45.0
29.1	181.4	442.4	762890.8	762817.3	50.0
30.0	187.2	436.7	787026.3	752921.8	51.1
33.4	208.2	415.6	875697.9	716566.4	55.0
35.0	218.3	405.5	918197.3	699141.7	56.8
38.1	237.6	386.3	998998.7	666013.1	60.0
40.0	249.5	374.3	1049368.4	645361.5	61.9
43.2	269.7	354.2	1134104.9	610819.6	65.0
45.0	280.7	343.1	1180539.4	591581.4	66.6
48.9	305.0	318.8	1282590.5	549740.5	70.0
50.0	311.9	311.9	1311710.4	537801.3	70.9

Notes:

1. Based on 2,100 gpm
2. S.G. of sediment = 2.5. Density of water @ 70° F = 62.3 lbs/ft^3
3. S.G. of seawater = 1.025. Density of water @ 70° F = 62.3 lbs/ft^3

Mass Balance For One Hour Dredging

IN-SITU PROPERTIES

Fluid SG	water content	specific gravity	void ratio	in-situ volume (cy)	solids density (lb/cf)	dry density (lb/cf)	total density (lb/cf)	total weight (1,000 lb)	weight of solids (1,000 lb)	weigth of water (1,000 lb)	volume of solids (cy)	volume of water (cy)	% solids (decimal volume)	conc. (g/L)
1.025	1.2	2.5	2.93	463	156.25	40.53	89.16	1,115	507	608	120.1	351.5	0.259	649
1.025	1.2	2.5	2.93	292	156.25	40.53	89.16	703	320	383	75.7	221.7	0.259	649
1.025	1.2	2.5	2.93	134	156.25	40.53	89.16	323	147	176	34.8	101.7	0.259	649
1.025	1.2	2.5	2.93	52	156.25	40.53	89.16	125	57	68	13.5	39.5	0.259	649

SLURRY PROPERTIES

%solids (decimal volume)	SG of sediment	water content	void ratio	weight of solid (1,000 lb)	weight of water (1,000 lb)	volume of water (cy)	volume of solids (cy)	total weight (1,000 lb)	total volume (cy)	SG of slurry	Bulk Ratio	conc. (lb/cf)	conc. (g/L)
0.190	2.5	1.75	4.26	507	886	513	120.1	1,392	633	1.306	1.37	29.65	475
0.120	2.5	3.01	7.33	320	961	556	75.7	1,280	632	1.202	2.16	18.72	300
0.055	2.5	7.04	17.18	147	1,033	598	34.8	1,180	633	1.106	4.72	8.58	137
0.022	2.5	18.66	45.51	57	1,062	615	13.5	1,119	628	1.057	12.08	3.35	54

CALCULATE BULKING FACT (WES report 7 of 12)

settled conc. of fines (g/L	SG of sediment	fines void ratio in CDF	initial void ratio	percent sand	bulking factor	settled conc (lb/cf)	settled conc (g/L)	settled % solids (decimal volume)	settled water content
400	2.5	5.25	2.93	0.4	1.355	29.91	479	0.187	1.74

SEDIMENT AND WATER TREATMENT BALANCE - TWO DREDGES With 16 Hours of Total Dredging

Phase I : CDF C

- CDF construction schedule is as presented in January 1999 Work Plan for T.O. #17
- Dredging activities do not begin until CDF C construction is completed (~ Feb 2001)
- Two dredges will be utilized to fill CDF C.
- Dredge rate is 2,100 gal/min per dredge
- Each dredge operates for two 4 hour shifts per day for a total of 16 hours of dredging per day.
- % solids of dredged material is 2.15% (by Volume)
- Dredging will be conducted 6 days per week
- Water treatment will be conducted continuously 7 days per week
- Assume all water is readily available for treatment.
- Bulking Factor = 1.4

CDF	CDF Capacity (yd^3)	Dredge Rate (gal/min)	% Solids	Total Solids (yd^3/day)	Total Water (gal/day)	Water Treatment (gal/min)	Days to Fill CDF
CDF C	93,800	2,100	2.15	214	1,972,656	1,174	~~313~~ 81
CDF A	56,400	0	0	0	0	0	NA
CDF B	50,700	0	0	0	0	0	NA
CDF D	435,300	0	0	0	0	0	NA

Dredge Balance

Northern 1/3	Middle 1/3	Southern 1/3
149,967 cy	149,967 cy	149,967 cy
67,000 cy	0 cy	0 cy
82,967 cy	0 cy	0 cy

SEDIMENT AND WATER TREATMENT BALANCE - TWO DREDGES With 16 Hours of Total Dredging

Phase II: CDF A

- CDF construction schedule is as presented in January 1999 Work Plan for T.O. #17
- Two dredges to be utilized to fill CDF A.
- Dredging will be conducted 6 days per week
- Dredge rate is 2,100 gal/min per dredge
- Each dredge operates for two 4 hour shifts per day for a total of 16 hours of dredging per day.
- % solids of dredged material is 2.15%
- Water treatment will be conducted continuously 7 days per week
- Assume all water is readily available for treatment.
- Bulking Factor = 1.4

CDF	CDF Capacity (yd^3)	Dredge Rate (gal/min)	% Solids	Total Solids (yd^3/day)	Total Water (gal/day)	Water Treatment (gal/min)	Days to Fill CDF
CDF C	93,800	0	0	0	0	0	NA
CDF A	56,400	2,100	2.15	214	1,972,656	1,174	188 AC
CDF B	50,700	0	0	0	0	0	NA
CDF D	435,300	0	0	0	0	0	NA

Dredge Balance

Northern 1/3	Middle 1/3	Southern 1/3
82,967 cy	149,967 cy	149,967 cy
40,286 cy	0 cy	0 cy
42,681 cy	149,967 cy	0 cy

SEDIMENT AND WATER TREATMENT BALANCE - TWO DREDGES With 16 Hours of Total Dredging

Phase III: CDF B

- CDF construction schedule is as presented in January 1999 Work Plan for T.O. #17
- Two dredges to be utilized to fill CDF B.
- Dredging will be conducted 6 days per week
- Dredge rate is 2,100 gal/min per dredge
- Each dredge operates for two 4 hour shifts per day for a total of 16 hours of dredging per day.
- % solids of dredged material is 2.15%
- Water treatment will be conducted continuously 7 days per week
- Assume all water is readily available for treatment.
- Bulking Factor = 1.4

CDF	CDF Capacity (yd^3)	Dredge Rate (gal/min)	% Solids	Total Solids (yd^3/day)	Total Water (gal/day)	Water Treatment (gal/min)	Days to Fill CDF
CDF C	93,800	0	0	0	0	0	NA
CDF A	56,400	0	0	0	0	0	NA
CDF B	50,700	2,100	2.15	214	1,972,656	1,174	169 A3
CDF D	435,300	0	0	0	0	0	NA

Dredge Balance

Northern 1/3	Middle 1/3	Southern 1/3
42,681 cy	149,967 cy	149,967 cy
36,214 cy	0 cy	0 cy
6,467 cy	149,967 cy	0 cy

SEDIMENT AND WATER TREATMENT BALANCE - TWO DREDGES With 16 Hours of Total Dredging

Phase IV: CDF D

- CDF construction schedule is as presented in January 1999 Work Plan for T.O. #17
- Two dredges to be utilized to fill CDF D.
- Dredging will be conducted 6 days per week
- Dredge rate is 2,100 gal/min per dredge
- Dredge production rate in Southern 1/3 is 50% greater than Northern and Middle 1/3.
- Each dredge operates for two 4 hour shifts per day for a total of 16 hours of dredging per day.
- % solids of dredged material is 2.15%
- Water treatment will be conducted continuously 7 days per week
- Assume all water is readily available for treatment
- Bulking Factor = 1.4

CDF	CDF Capacity (yd^3)	Dredge Rate (gal/min)	% Solids	Total Solids (yd^3/day)	Total Water (gal/day)	Water Treatment (gal/min)	Days to Fill CDF
CDF C	93,800	0	0	0	0	0	NA
CDF A	56,400	0	0	0	0	0	NA
CDF B	50,700	0	0	0	0	0	NA
CDF D	435,300	2,100	3.225	322	1,950,984	1,161	~~967~~ 251

Dredge Balance

Northern 1/3	Middle 1/3	Southern 1/3
6,467 cy	149,967 cy	149,967 cy
6,467 cy	149,967 cy	149,967 cy
0 cy	0 cy	0 cy

APPENDIX F

Design Calculations

[In order to minimize costs and schedule of the 30% WTP design submittal, only marked up design calculations from ERM's Design Analysis Report (1991) have been provided. The purpose of these marked up calculations is to present to the USACE the type of calculations that will be included in future WTP design submittals. All design calculations associated with the 90% WTP design submittal for T.O. #17 will be recalculated by FWENC]

DESIGN CALCULATIONS

TABLE OF CONTENTS

		Page
I.	Design Criteria	1
II.	Dredging	2
III.	Wastewater Treatment	6
	1. Treatment Process Flow Diagram (PRIMARY SETTLING (CDF A,B,C AND D))	6
	2. ~~Primary~~ SECONDARY Sedimentation (CDF #1)	8
	3. Equalization (CDF #2)	15
	4. Flocculation Tanks	22
	5. Alum Feed System	24
	6. Polymer Feed System	29
	7. Secondary Clarification (CDF #3)	37
	8. Hydrogen Peroxide Feed	41
	9 Continuous Backwash Filter	43
	10. Polishing Filters	51
	11. UV - Peroxide System	53
IV.	Pumping, Piping & Hydraulics	68
	1. Pumps	68
	2. Piping	74
~~V.~~	~~Solids Treatment~~ - NOT APPLICABLE FOR NEW DESIGN	79
	~~1. Solids Treatment Process Flow Diagram~~	79
	~~2. Solids Dewatering System~~ - NEVER CONSTRUCTED	81
	~~3. Incineration~~ - NEVER CONSTRUCTED	83
	~~4. Solids Storage Facilities~~ - NEVER CONSTRUCTED	88
VI.	Material Balances	95

DESIGN CALCULATIONS

TABLE OF CONTENTS (Cont'd)

	Page
~~VII. Landfill Cap Design~~ NOT APPLICABLE TO WTP DESIGN	98
~~1. HELP Model~~	99
~~2. Solids Storage~~	110
~~3. CDF Storage Volume and Earthwork~~	113
~~4. Stormwater Calculations and Pipe Design~~	118
~~5. Rainwater Collected~~	124
~~6. Drainage Channel Design~~	125
~~7. Anchor Trench Drain Design~~	128
~~8. Cap Stability Calculations~~	130
~~9. Gamet Transmissivity~~	134D
VIII. Structural Calculations	135

1/

DESIGN CRITERIA

Design Dredge Flow Rate: TO BE DETERMINED		~~2,100~~ GPM
Design Wastewater Flow:	ASSUME 1,200	~~350~~ GPM
Total Sediment Storage Volume:	450,000	~~20,000~~ CY
Equalization Volume (CDF #2):		540,000 gal.

Parameter	Influent	Effluent
PCB	~~4,000-10,000~~ ppm	<1 ppb
TSS	~~250~~ ppm	<10 ppm
pH	6 - 9	6 - 9

- INFLUENT PARAMETERS TO BE ~~DETERMINED~~ DEVELOPED DURING TREATABILITY STUDY.
- INFLUENT/EFFLUENT PARAMETERS TO INCLUDE HEAVY METALS (Cd, Cu, Cr & Pb)

DREDGE TECHNOLOGY TO BE DETERMINED

Description: ~~Cutterhead Hydraulic Suction Pipeline Dredge~~

Size: Pump discharge of between 8 and 10 inches in diameter.

Capacity: Minimum capacity between 30 to 40 cubic yards (in-situ) per hour capable of pumping through 5,200 linear feet of pipeline with a static lift of 10 feet.

TO BE DETERMINED DURING DREDGE REPORT

Flow Rate: ~~2,100~~ gpm /PER DREDGE

Dredge Operating Parameters: TO BE DETERMINED

Swing Speed - 50% of dredge capability
Cutterhead Speed - 50% of dredge capability
Dredge Pump Speed - Run at maximum rpm
Advance per Swing - Two feet (cutterhead diameter)
Swing Anchors - Place on shore
Depth of Cut - Sufficient to remove top one foot of sediment with each pass

The ERM Group

2 OF 3 571

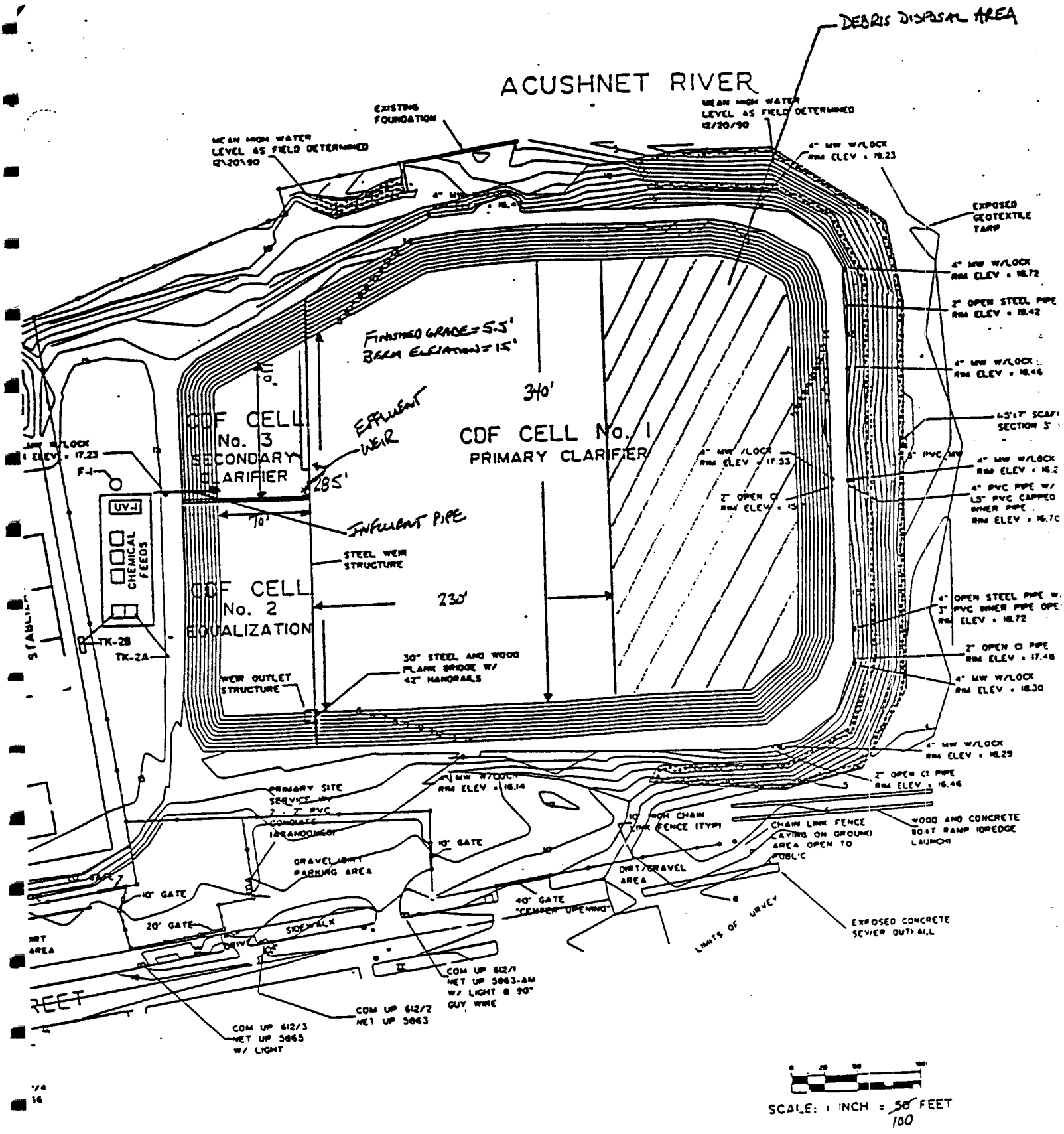
DEBRIS DISPOSAL AREA
ACUSHNET RIVER
EXISTING FOUNDATION
MEAN HIGH WATER LEVEL AS FIELD DETERMINED 12/20/90
MEAN HIGH WATER LEVEL AS FIELD DETERMINED 12\20\90
4" MW W/LOCK RIM ELEV = 19.23
EXPOSED GEOTEXTILE TARP
4" MW W/LOCK RIM ELEV = 18.72
2" OPEN STEEL PIPE RIM ELEV = 19.42
4" MW W/LOCK RIM ELEV = 18.46
FINISHED GRADE = 5.5'
BERM ELEVATION = 1.5'
340'
CDF CELL No. 3 SECONDARY CLARIFIER
EFFLUENT WEIR
CDF CELL No. 1 PRIMARY CLARIFIER
4" MW W/LOCK RIM ELEV = 17.23
F-1
UV-1
CHEMICAL FEEDS
285'
70'
INFLUENT PIPE
STEEL WEIR STRUCTURE
CDF CELL No. 2 EQUALIZATION
230'
TK-2B
TK-2A
30" STEEL AND WOOD PLANK BRIDGE W/ 42" HANDRAILS
WEIR OUTLET STRUCTURE
4" MW W/LOCK RIM ELEV = 17.33
2" OPEN CI RIM ELEV = 15.
4" MW W/LOCK RIM ELEV = 16.2
4" PVC PIPE W/ 1.5" PVC CAPPED INNER PIPE RIM ELEV = 16.70
4" OPEN STEEL PIPE W/ 3" PVC INNER PIPE OPE RIM ELEV = 18.72
2" OPEN CI PIPE RIM ELEV = 17.48
4" MW W/LOCK RIM ELEV = 18.30
4" MW W/LOCK RIM ELEV = 18.29
2" OPEN CI PIPE RIM ELEV = 16.46
MW W/LOCK RIM ELEV = 16.14
PRIMARY SITE SERVICE
2 - 2" PVC CONDUIT
10" GATE
GRAVEL PARKING AREA
10' HIGH CHAIN LINK FENCE (TYP)
CHAIN LINK FENCE (AVING ON GROUND) AREA OPEN TO PUBLIC
WOOD AND CONCRETE BOAT RAMP (DREDGE LAUNCH)
DIRT/GRAVEL AREA
40' GATE "TEMPER OPENING"
20' GATE
SIDEWALK
LIMITS OF SURVEY
EXPOSED CONCRETE SEWER OUTFALL
COM UP 612/1 NET UP 3863-AM W/ LIGHT & 90' GUY WIRE
COM UP 612/2 NET UP 3863
COM UP 612/3 NET UP 3863 W/ LIGHT
SCALE: 1 INCH = 50 FEET
100

ERM-New England, Inc. 205 Portland Street • Boston, Massachusetts 02114 • (617) 742-8228

Project NEW BEDFORD HOT SPOTS REMEDIATION W.O. No. 208-01-08 Sheet 3 of 3
Subject DESIGN BASIS By JDF Date 5/2/91
CELL NO. 3 SECONDARY SETTLING Chkd. by FS Date 5/2/91

ESTIMATE OF SETTLABLE MATERIAL

FLOW RATE = ~~360~~ 390 GPM

WASTEWATER TSS CONCENTRATION = ~~250~~ PPM ALUM DOSE = 25 PPM

REDUCTION IN TDS CONCENTRATION = 2000 PPM

SOLIDS REMOVAL IN CELL NO. 3 = 98%

SOLIDS SPECIFIC GRAVITY = 1.1

$$\text{SETTLED SOLIDS} = (\cancel{360}\ 390\,\text{GPM})(2000 + 250 + 25\,\text{PPM})(0.98)(3.785\,\text{LT/GAL})(1440\,\text{MIN/DAY})\left(\frac{\text{GM}}{1000\,\text{MG}}\right)\left(\frac{\#}{454\,\text{GM}}\right)(1.1)$$

$$= \cancel{11,482}\ 10,834.8\ \#/\text{DAY}$$

$$\text{TOTAL SOLIDS} = 80(\cancel{11,482}\ 10,834.8\ \#/\text{DAY}) = \cancel{918,600}\ 866,783\ \# \quad \cancel{459.3}\ 433.4\ \text{TONS}$$

VOLUME OF SOLIDS

ASSUME = 30% SOLIDS

$$\text{VOLUME} = \frac{(\cancel{918,600}\ 866,783\ \#)\left(\frac{1\,\text{GAL}}{8.34\,\#}\right)\left(\frac{1\,\text{CF}}{7.48\,\text{GAL}}\right)}{0.30} = \cancel{49,100}\ 46,315\ \text{CF} = \cancel{1,819}\ 1,715\ \text{CY}$$

SAY ~~4900~~ 1,750 CY

THEREFORE THERE IS SUFFICIENT VOLUME TO STORE SOLIDS THAT WILL SETTLE IN CELL NO. 3

HOWEVER, SHOULD SOLID CAPTURE IN CDF CELL EXCEED ANTICIPATED AMOUNT, OR SOLIDS DO NOT ACHIEVE 30% CONCENTRATION, THEN SOME OF THE SOLIDS MAY NEED TO BE TRANSPORTED TO CDF CELL NO. 1 FOR TEMPORARY STORAGE.

- WILL BE RECALCULATED BASED ON USING 3RD CELL AS SECONDARY SETTLING BASIN.

ERM-New England, Inc. 205 Portland Street • Boston, Massachusetts 02114 • (617) 742-8228

Project USACE - NEW BEDFORD HOT SPOTS W.O. No. 208-01-05 Sheet 1 of
Subject DREDGING OPERATIONS CALCULATIONS By JDF Date 2/14/91
Chkd. by Date

BASIS: ~~10,000~~ 450,000 cy OF SEDIMENTS (IN-SITU) TO BE DREDGED

~~3 TO 4~~ 16 HOURS PER DAY AVAILABLE TIME FOR DREDGING

DREDGE WILL HAVE A MINIMUM OUTPUT OF ~~30-40~~ CY (IN SITU) PER HOUR

SOLIDS CONTENT IN PLACE = 35 %

(REFER TO TABLE A3 NEW BEDFORD HARBOR SUPERFUND PROJECT, ACUSHNET RIVER ESTUARY ENGINEERING FEASIBILITY STUDY OF DREDGING AND DREDGED MATERIAL DISPOSAL ALTERNATIVES, REPORT 3, CHARACTERIZATION AND ELUTRIATE TESTING OF ACUSHNET RIVER ESTUARY SEDIMENT, MARCH 89)

TO BE REVISED BASED ON DREDGE TECHNOLOGY SELECTED.

SOLIDS CONTENT EXPECTED IN CDF INFLUENT = 70 TO 140 g/l (p18 ABOVE)

SOLIDS CONTENT EXPECTED IN CDF BOTTOMS = 25% (ASSUMED)

ESTIMATE OF DREDGE PUMPING RATE (MINIMUM)

$$(40\ CY/HR)(350\ gm/l) = (X\ CY/HR)(140\ g/l)$$

$$X = 100\ CY/HR$$

$$= 337\ GAL/MIN$$

ESTIMATE DREDGE PUMPING RATE AT 2100 GPM

$$(2100\ GPM)(140\ gm/LT)(3.785\ LT/GAL) = 1,112,790\ GRAM/MINUTE$$

$$= 2,450\ \#/MINUTE$$

FOR TYPICAL DREDGE CYCLE (ASSUME 3.5 HOURS)

$$\text{SOLIDS TRANSFERRED} = (2,450\#/MIN)(3.5\ HRS)(60\ MIN/HR)$$

$$= 514,500\ \#/DAY$$

$$= 257.3\ TONS/DAY$$

ESTIMATE 80 DAYS OF DREDGING

$$\text{SOLIDS TRANSFERRED} = (2,450\#/MIN)(3.5\ HRS)(60\ MIN/HR)(80\ DAYS)$$

$$= 41,160,000\ \#$$

$$= 20,580\ TONS$$

ERM-New England, Inc. 205 Portland Street • Boston, Massachusetts 02114 • (617) 742-8228

Project USACE - NEW BEDFORD HOT SPOTS W.O. No. 208-01-05 Sheet 2 of
Subject DREDGING OPERATIONS CALCULATIONS By JDF Date 2/15/91
Chkd. by Date

ESTIMATE VOLUME OF SEDIMENTS REMOVED

VOLUME OF SEDIMENTS = (20,580 TONS)(2000 lb/TON)(1 cft/350 LB)(454 GM/lb) × (1.308×10⁻³ CY/cft)

= ~~79,811.0~~ CY

450,000

ERM-New England, Inc. 205 Portland Street • Boston, Massachusetts 02114 • (617) 742-8228

Project USACE - NEW BEDFORD HOT SPOTS W.O. No. 208-01-05 Sheet 3 of

Subject DREDGING OPERATIONS By JDF Date

Chkd. by Date

DAY 1

CDF EMPTY

START DREDGING AT 2100 GPM FOR 4 HRS

VOLUME DELIVERED TO CDF

$(2100\ GPM)(\cancel{4}\ 16\ HR)(60\ MIN/HR) = 504{,}000\ GAL.$

SOLIDS DELIVERED TO CDF

$(2100\ GPM)(4\ HR)(60\ MIN/HR)(30\ GM/LIT)(2.205\times10^{-3}\ \#/GM)(3.785\ LIT/GAL)$

$= \cancel{126{,}190.4}\ \#/DAY$

– TO BE REVISED BASED ON DREDGE TECHNOLOGY(IES) CHOSEN TO REMOVE SEDIMENTS

Wastewater Treatment Process Flow Diagram

11

ERM-New England, Inc. 205 Portland Street • Boston, Massachusetts 02114 • (617) 742-8228

Project: New Bedford Hot Spots — W.O. No. 203-01-09 — Sheet 1 of 1
Subject: Liquid Treatment Process Flow Diagram — By: DJM — Date: 6/14/91
Chkd. by: DF — Date: 8/27/91

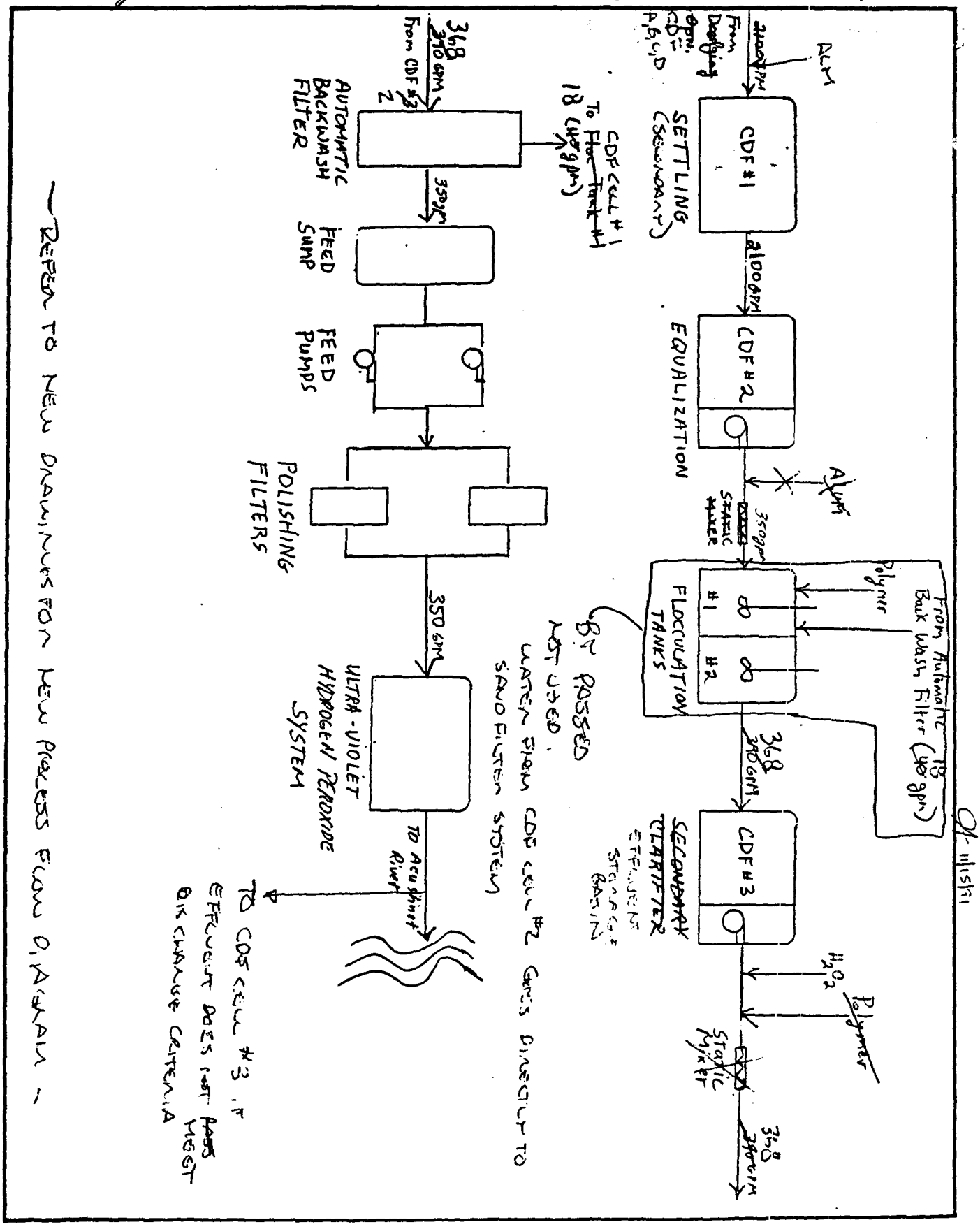

REFER TO NEW DRAWINGS FOR NEW PROCESS FLOW DIAGRAM

11/15/91

Description: CDF Cell No. 1

Area: 72,000 sf

Capacity: 5,200,000 gallons

Operating Parameters:

Bottom Elevation:	5.5 ft.
Top Elevation	15 ft.
Max. Operating Level	13 ft.
Min. Operating Level	10.5 ft.
Effluent Control	Adjustable Weir
Floating Product Control	Floating Booms, Skimmers
Min. Freeboard	2 ft.
Max. Flow Rate Out	~~2,100~~ gpm
~~Max. Solids Storage Volume~~	~~15,000 cy~~

- DESIGN INFORMATION FOR CDF CELLS 1, 2 & 3 WILL BE SUMMARIZED IN CALCULATION PACKAGE FOR NEW WTP DESIGN.

The ERM Group

ERM-New England, Inc. 205 Portland Street • Boston, Massachusetts 02114 • (617) 742-8228

Project New Bedford Hot Spot Remediation W.O. No. 28-01-09 Sheet 1 of
Subject Design Basis By DJM Date 6/17/91
Required Volume of CDF #1 Chkd. by JDF Date 8/27/91

Basis – See Attached Sheet by JDF – 5/1/91

Assumptions
1. ~~incoming~~ in-situ Solids – 40%
2. Average Pump Rate – 2,100 GPM
3. Daily Dredge Period = 3.5 hrs per day
4. In-situ Volume – 10,000 c.y.

Required Storage Volume in CDF #1 – 40%

Liquid Volume/day = $(2100\ GPM)\left(\frac{3.5\ hrs}{day}\right)\left(\frac{60\ min}{1\ hr}\right)\left(\frac{1\ ft^3}{7.48\ gal}\right) = 58{,}957\ ft^3$

CDF#1 must be able to hold 80 days settled solid plus liquid volume/day.

Settled Solid (40%) = 10,900 c.y. (From JDF calc.)

$(10{,}900\ cy)\left(\frac{27\ ft^3}{1\ cy}\right) + 58{,}957\ ft^3 = 353{,}257\ ft^3$

say $353{,}300\ ft^3$

CDF #1 proposed volume = 19,965 c.y (From JDF calc. sheet)

19,965 c.y = $539{,}055\ ft^3$ which is greater than $353{,}300\ ft^3$ required volume. Therefore, proposed volume is okay.

Required Storage Volume in CDF#1 – 70%

Liquid Volume = $58{,}957\ ft^3$

Total Settled Solids (70%) = 19,100 c.y. or $515{,}700\ ft^3$ (From JDF calc Sheet)

Total required volume @ day 80 = $58{,}957\ ft^3 + 515{,}700\ ft^3$ = $574{,}657\ ft^3$ which is greater than the proposed volume of $539{,}055\ ft^3$.

* HOWEVER, SOLIDS CONCENTRATION IN ESTUARY IS ONLY ESTIMATED TO BE ABOUT 40% BASED ON FIELD DATA. ALSO, PREVIOUS STUDIES INDICATE SLUDGE (BOTTOM SEDIMENTS) HAVE A EXPANSION FACTOR OF 40%. THEREFORE VOLUME OK.

ERM-New England, Inc. 205 Portland Street • Boston, Massachusetts 02114 • (617) 742-8228

Project: NEW BEDFORD HOT SPOT REMEDIATION — W.O. No. 208-01-08 — Sheet 1 of 5
Subject: DESIGN BASIS — By: JDF — Date: 5/1/91
CDF CELL NO. 1 SUMMARY SHEET — Chkd. by: FS — Date: 5/2/91

DREDGING OPERATION

	AVERAGE	PEAK (MAXIMUM)
DREDGE PUMPING RATE (GPM)	2,100	2,100
DAILY DREDGING PERIOD (HRS)	3.5	6.0
DREDGE WASTEWATER SOLIDS CONCENTRATION (%)	2.0	3.5
DREDGE SOLIDS TRANSFER TO CDF (#/DAY)	88,270	264,812
(TONS/DAY)	44.1	132.4
SOLIDS STORAGE VOLUME REQUIRED IN CDF FOR 30 DAYS (CY)	13,000	15,000
AVAILABLE SEDIMENT STORAGE (CY)	AVERAGE DAILY FLOW 17,800	PEAK DAILY FLOW 16,200

CDF AS PRESENTLY DESIGNED HAS SUFFICIENT VOLUME TO STORE ESTIMATED VOLUME OF SEDIMENT MATERIAL BASED ON 10,000 CY IN-SITU (ESTUARY)

ERM-New England, Inc. 205 Portland Street • Boston, Massachusetts 02114 • (617) 742-8228

Project: NEW BEDFORD HOT SPOTS REMEDIATION — W.O. No. 208-01-08 — Sheet 2 of 5
Subject: DESIGN BASIS — By: JDF — Date: 5/1/91
CDF CELL NO. 1 — Chkd. by: FS — Date: 5/2/91

BASIS: IN-SITU VOLUME OF PCB-CONTAMINATED SEDIMENTS IN ESTUARY = 10,000 CY
IN-SITU SOLIDS CONTENT 40 TO 70% BY WEIGHT
(REFER TO P. 5-1 OF FS REPORT)

DREDGING OPERATIONS
AVERAGE PUMP RATE = 2,100 GPM
DURATION OF DREDGING = 80 DAYS
DAILY DREDGE PERIOD
AVERAGE = 3.5 HRS/DAY
PEAK = 6 HRS/DAY

ASSUMPTIONS
SPECIFIC GRAVITY OF SOLIDS = 1.2
SOLIDS REMOVAL IN CDF = 98%
SOLIDS CONCENTRATION IN SETTLED CDF MATERIAL = 30%

REQUIRED STORAGE VOLUME IN CDF AT AN IN-SITU SOLIDS CONTENT OF 40%

$$\text{INCOMING SOLIDS} = \frac{0.4}{1.2}(10{,}000\ CY) = 3{,}333\ CY$$

SETTLED SOLIDS AT 30%

$$\text{VOLUME} = \frac{0.98(3{,}333\ CY)}{0.30} = 10{,}888\ CY \quad \text{SAY } 10{,}900\ CY$$

AVERAGE PERCENT SOLIDS IN CDF INFLUENT

$$\frac{(3{,}333\ CY)(27\ CF/CY)(7.48\ GAL/CF)(1.2)}{(80\ DAYS)(4\ HRS/DAY)(60\ MIN/HR)(2{,}100\ GAL/MIN)} \times (100)$$

$$= 2\%\ \text{SOLIDS}$$

REQUIRED STORAGE VOLUME IN CDF AT AN IN-SITU SOLIDS CONTENT OF 70%

$$\text{INCOMING SOLIDS} = \frac{0.7}{1.2}(10{,}000\ CY) = 5{,}833\ CY$$

SETTLED SOLIDS (30%)

$$\text{VOLUME} = \frac{0.98(5{,}833\ CY)}{0.30} = 19{,}054.5\ CY \quad \text{SAY } 19{,}100\ CY$$

AVERAGE PERCENT SOLIDS IN INFLUENT

$$\frac{(5{,}833\ CY)(27\ CF/CY)(7.48\ GAL/CF)(1.2)}{(80\ DAYS)(240\ MIN/DAY)(2{,}100\ GAL/MIN)} \times 100$$

ERM-New England, Inc. 205 Portland Street • Boston, Massachusetts 02114 • (617) 742-8228

Project: NEW BEDFORD HOT SPOTS REMEDIATION | W.O. No. 208-01-08 | Sheet 3 of 5
Subject: DESIGN BASIS CDF CELL NO. 1 | By: JDF | Date: 5/1/91
Chkd. by: FS | Date: 5/2/91

= 3.5 % SOLIDS

SOLIDS TRANSFERRED PER DAY

ASSUMES 3.5 HRS OF DREDGING
PUMPING RATE = 2100 GPM
SOLIDS CONCENTRATION = 2%

SOLIDS = (2100 GPM)(0.02)(1.2 #/ft)(8.34 #/GAL)(3.5 HRS)(60 MIN/HR)
= 88,270 #/DAY
= 44.1 TONS/DAY SOLIDS AVERAGE

ASSUMES 6 HRS OF DREDGING
PUMPING RATE = 2100 GPM
SOLIDS CONCENTRATION = 3.5%

SOLIDS = (2100 GPM)(0.035)(1.2 #/ft)(8.34 #/GAL)(6 HRS)(60 MIN/HR)
= 264,812 #/DAY
= 132.4 TONS/DAY SOLIDS PEAK

– NEW SOLIDS/WATER BALANCES TO BE DEVELOPED

ERM-New England, Inc. 205 Portland Street • Boston, Massachusetts 02114 • (617) 742-8228

Project NEW BEDFORD HOT SPOTS REMEDIATION W.O. No. 209-01-08 Sheet 4 of 5
Subject DESIGN BASIS By JDF Date 5/1/91
Chkd. by FS Date 5/2/91

CDF CELL NO. 1 CONFIGURATION (REFER TO ATTACHED FIGURE)
(BASED ON SITE PREPARATION CONTRACT BY USACE-NED APRIL 1991 - 90% SUBMITTAL)

FINISHED BOTTOM ELEVATION = 5.5 FT
TOP OF BERM/DIVIDING WALL ELEVATION = 15.0 FT
REQUIRED FREEBOARD = 2 FT
WIDTH OF CDF = 230 FT
LENGTH . MAXIMUM = 340 FT
MINIMUM = 285 FT

TOTAL STORAGE VOLUME

$$\left(\frac{340\,FT + 285\,FT}{2}\right)(230\,FT)(15\,FT - 5.5\,FT) = 682{,}812.5\ CF$$
$$= \underline{\underline{25{,}290\ CY}}$$

USABLE VOLUME

$$\left(\frac{340\,FT + 285\,FT}{2}\right)(230\,FT)(15\,FT - 2\,FT - 5.5\,FT) = 539{,}063\ CF$$
$$= \underline{\underline{19{,}965\ CY}}$$

VOLUME FOR STORAGE OF SEDIMENT MATERIAL

USABLE VOLUME MINUS AVERAGE DAILY DREDGE WASTEWATER VOLUME

$$19{,}965\,CY - (441{,}000\ GAL/DAY)(1\,CF/7.48\,GAL)(1\,CY/27\,CF) = \underline{\underline{17{,}780\ CY}}$$

AVERAGE DREDGE DAY

$$19{,}965\,CY - (756{,}000\ GALS/DAY)(1\,CF/7.48\,GAL)(1\,CY/27\,CF) = \underline{\underline{16{,}222\ CY}}$$

PEAK DREDGE DAY

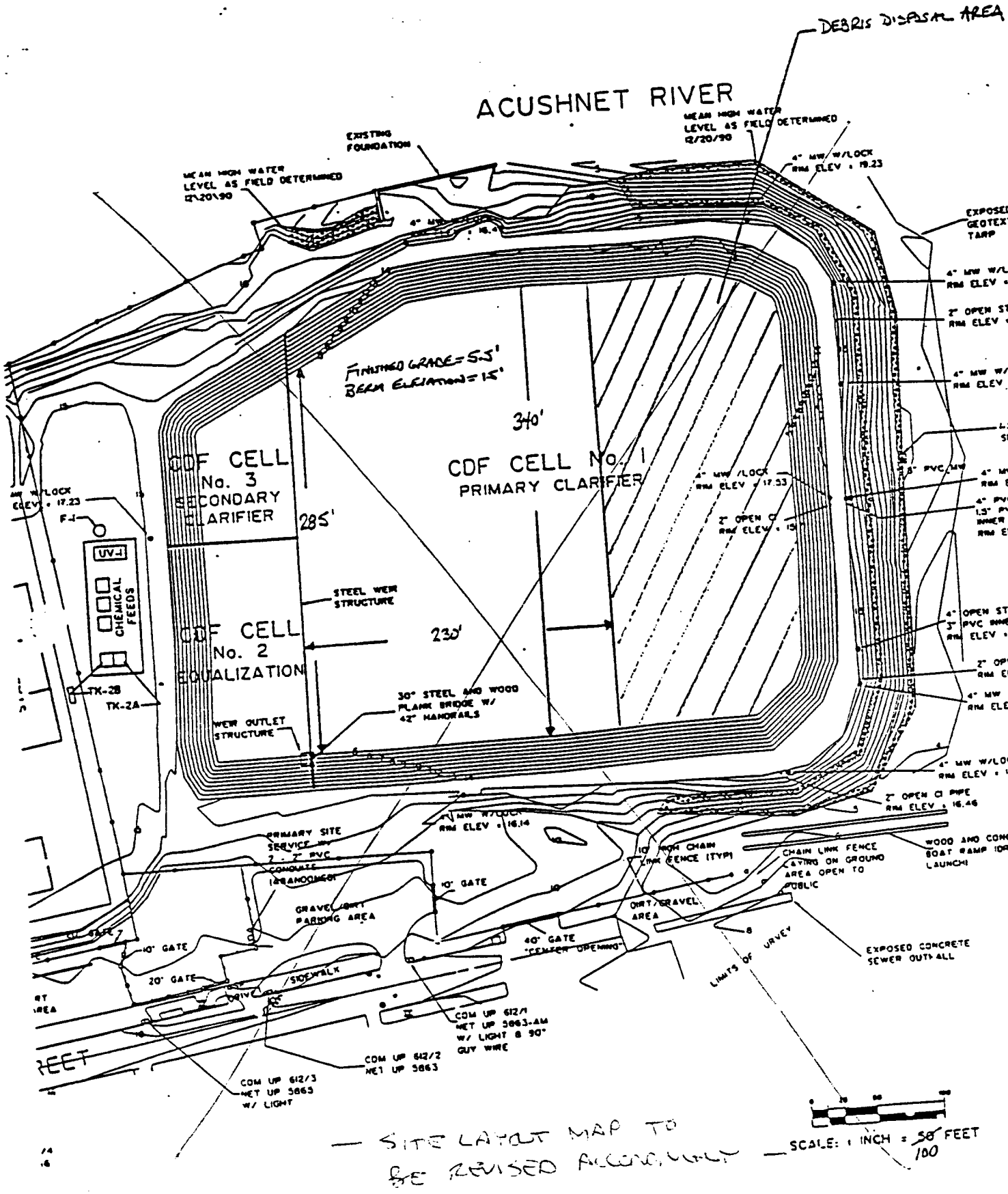

— SITE LAYOUT MAP TO BE REVISED ACCORDINGLY — SCALE: 1 INCH = ~~50~~ 100 FEET

Description: CDF Cell No. 2

Area: 11,900 sf

Capacity: 540,000 gallons

Operating Parameters:

Max Operating Elevation	11.6 ft.
Min. Operating Elevation	5.5 ft.
Average Effluent Flow Rate	~~350~~ gpm
~~Maximum Solid Storage Volume~~	~~36,000 gallons~~

~ DESIGN INFORMATION TO BE SUMMARIZED FOR CALCULATIONS

The ERM Group

ERM-New England, Inc. 205 Portland Street • Boston, Massachusetts 02114 • (617) 742-8228

Project NEW BEDFORD HOT SPOTS REMEDIATION W.O. No. 208-01-08 Sheet 1 of 4
Subject DESIGN BASIS By JDF Date 5/1/91
CDF CELL NO. 2 Chkd. by FS Date 5/2/91

BASIS

PEAK FLOW TO CDF CELL NO. 1 = ~~2100~~ GPM FOR ~~3~~ HOURS

AVERAGE FLOW TO CDF CELL NO. 1 = 2100 GPM FOR 3.5 HOURS

SIZE CDF CELL NO. 2 TO HOLD DAILY FLOW FROM DREDGE
UNDER THE FOLLOWING CONDITIONS
DREDGE MATERIAL NEEDS 8 HRS TO SETTLE

DESIGN VOLUMES

AVERAGE DAILY VOLUME = (2100 GPM)(3.5 HRS)(60 MIN/HR)
= 441,000 GALS

MAXIMUM DAILY VOLUME = (2100 GPM)(6 HRS)(60 MIN/HR)
= 756,000 GALS

CAPACITY CDF CELL NO. 2

BOTTOM ELEVATION = 5.5 FT
TOP OF BERM ELEVATION = 15 FT
MAXIMUM WATER ELEVATION IN CDF CELL NO. 1 = 13 FT
OPERATING WATER ELEVATION IN CDF CELL NO. 1 (REFER TO SHEET NO. 2)
MAXIMUM HIGH WATER ELEVATION = 13 FT
MAXIMUM LOW WATER ELEVATION TO
MAINTAIN 756,000 GAL CAPACITY = 11.6 FT
MINIMUM LOW WATER ELEVATION TO
MAINTAIN WATER OVER SETTLED
SEDIMENT MATERIAL = 11.2 FT

DIMENSIONS OF CDF CELL NO. 2 (REFER TO ATTACHED FIGURE)
EFFECTIVE WIDTH = 70 FT
EFFECTIVE LENGTH = 170 FT

AREA = (170 FT)(70 FT) = 11,900 SF

VOLUME AT WATER ELEVATION 11.2 FT

(11,900 SF)(11.2 FT − 5.5 FT) = 67,830 CF
= 507,370 GALLONS

VOLUME AT WATER ELEVATION 11.6 FT

(11,900 SF)(11.6 FT − 5.5 FT) = 72,590 CF
= 543,000 GALLONS

ERM-New England, Inc. 205 Portland Street • Boston, Massachusetts 02114 • (617) 742-8228

Project NEW BEDFORD HOT SPOTS REMEDIATION W.O. No. 208-01-08 Sheet 2 of 4
Subject DESIGN BASIS By JDF Date 5/1/91
Chkd. by FS Date 5/2/91

OPERATING LEVELS IN CDF CELL NO. 1

MAXIMUM HIGH WATER ELEVATION

BERM ELEVATION MINUS REQUIRED FREEBOARD

15' - 2' = 13'

MAXIMUM LOW WATER ELEVATION TO MAINTAIN 756,000 GAL CAPACITY
(CAPACITY FOR 6 HR DREDGE DAY)

CDF CELL NO. 1 AREA =

$$\left(\frac{285\,FT + 340\,FT}{2}\right)(230\,FT) = 71{,}875\ SF$$

DEPTH REQUIRED TO EQUAL THIS VOLUME

$$\frac{756{,}000\ GAL\ (1\ CF/7.48\ GAL)}{71{,}875\ SF} = 1.4\ FT$$

ELEVATION = 15 FT - 2 FT - 1.4 FT = 11.6 FT

MINIMUM LOW WATER ELEVATION TO MAINTAIN WATER COVER OVER SETTLED SEDIMENT MATERIAL IN THE CDF

PEAK VOLUME OF MATERIAL TO BE STORED IN CDF = 15,000 CY

(1) $$\frac{(15{,}000\ CY)(27\ CF/1\ CY)}{71{,}875\ SF} = 5.63\ FT$$ DEPTH NEEDED TO STORE VOLUME OF SETTLED MATERIAL

AVERAGE VOLUME OF MATERIAL TO BE STORED IN CDF = 13,000 CY

(1) $$\frac{(13{,}000\ CY)(27\ CF/1\ CY)}{71{,}875\ SF} = 4.88\ FT$$ DEPTH NEEDED TO STORE VOLUME OF SETTLED MATERIAL

ELEVATION OF SETTLED MATERIAL (BASED ON 15,000 CY VOLUME)

INVERT ELEVATION + ELEVATION OF SETTLED MATERIAL

5.5 FT + 5.63 FT = 11.13 SAY 11.2 FT

(1) NOTE: SLUDGE STORAGE VOLUME IS BASED ON USACE-NED EVALUATION OF EXPANSION COEFFICIENT OF APPROXIMATELY 40%. THEREFORE TOOK PEAK AT 50% AND AVERAGE AT 30%.

ERM-New England, Inc. 205 Portland Street • Boston, Massachusetts 02114 • (617) 742-8228

Project NEW BEDFORD HOT SPOTS REMEDIATION W.O. No. 203-01-03 Sheet 3 of 4
Subject DESIGN BASIS By JDF Date 5/1/91
Chkd. by FS Date 5/2/91

VOLUME AT WATER ELEVATION 11.2 FT WITH 1 FT FOR SOLIDS

(11,900 SF)(11.2 FT - 5.5 FT - 1 FT) = 55,930 CF

= 418,360 GALLONS

VOLUME AT WATER ELEVATION 11.6 FT WITH 1 FT FOR SOLIDS

(11,900 SF)(11.6 FT - 5.5 FT - 1 FT) = 60,690 CF

= 454,000 GALLONS

BASED ON ABOVE INFORMATION, THE EQUALIZATION BASIN IS SUFFICIENTLY SIZED TO HANDLE THE AVERAGE DAILY FLOW OF 441,000 GALLONS. HOWEVER, SHOULD THE PEAK FLOW CONDITION OF 756,000 GALLONS OCCUR, THE VOLUME ABOVE 418,360 GALLONS (756,000 GALLONS − 418,360 GALLONS = 337,640 GALLONS) WILL NEED TO BE STORED IN CDF CELL NO. 1.

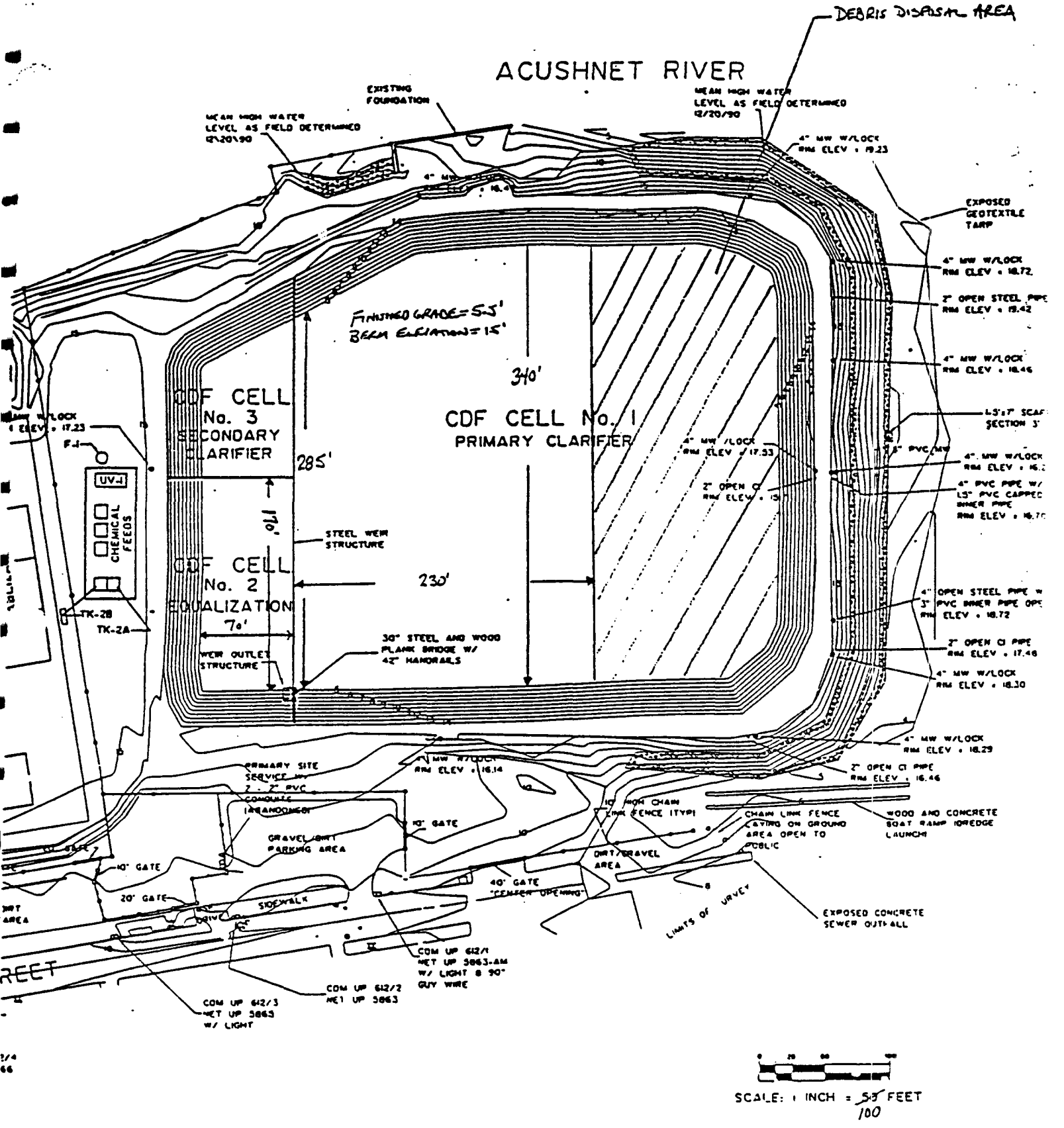
DEBRIS DISPOSAL AREA
ACUSHNET RIVER
EXISTING FOUNDATION
MEAN HIGH WATER LEVEL AS FIELD DETERMINED 12/20/90
MEAN HIGH WATER LEVEL AS FIELD DETERMINED 12/20/90
4" MW W/LOCK RIM ELEV = 19.23
EXPOSED GEOTEXTILE TARP
4" MW W/LOCK RIM ELEV = 18.72
2" OPEN STEEL PIPE RIM ELEV = 19.42
4" MW W/LOCK RIM ELEV = 18.46
FINISHED GRADE = 5.5'
BERM ELEVATION = 15'
340'
CDF CELL No. 3 SECONDARY CLARIFIER
CDF CELL No. 1 PRIMARY CLARIFIER
285'
110'
CDF CELL No. 2 EQUALIZATION
230'
70'
STEEL WEIR STRUCTURE
WEIR OUTLET STRUCTURE
30" STEEL AND WOOD PLANK BRIDGE W/ 42" HANDRAILS
UV-1
CHEMICAL FEEDS
TK-2B
TK-2A
F-1
4" MW W/LOCK RIM ELEV = 17.23
4" MW W/LOCK RIM ELEV = 17.53
2" OPEN CI RIM ELEV = 15
4" PVC PIPE W/ 1.5" PVC CAPPED INNER PIPE RIM ELEV = 16.70
4" OPEN STEEL PIPE W/ 3" PVC INNER PIPE OPEN RIM ELEV = 18.72
2" OPEN CI PIPE RIM ELEV = 17.46
4" MW W/LOCK RIM ELEV = 18.30
4" MW W/LOCK RIM ELEV = 18.29
2" OPEN CI PIPE RIM ELEV = 16.46
4" MW W/LOCK RIM ELEV = 16.14
PRIMARY SITE SERVICE
2 - 2" PVC CONDUITS (ABANDONED)
GRAVEL/DIRT PARKING AREA
10' GATE
10' GATE
20' GATE
SIDEWALK
DIRT AREA
10' HIGH CHAIN LINK FENCE (TYP)
DIRT/GRAVEL AREA
40' GATE "CENTER OPENING"
CHAIN LINK FENCE LAYING ON GROUND AREA OPEN TO PUBLIC
WOOD AND CONCRETE BOAT RAMP (WEDGE LAUNCH)
LIMITS OF SURVEY
EXPOSED CONCRETE SEWER OUTFALL
COM UP 612/1 NET UP 5863-AM W/ LIGHT & 90" GUY WIRE
COM UP 612/2 NET UP 5863
COM UP 612/3 NET UP 5863 W/ LIGHT
SCALE: 1 INCH = 100 FEET

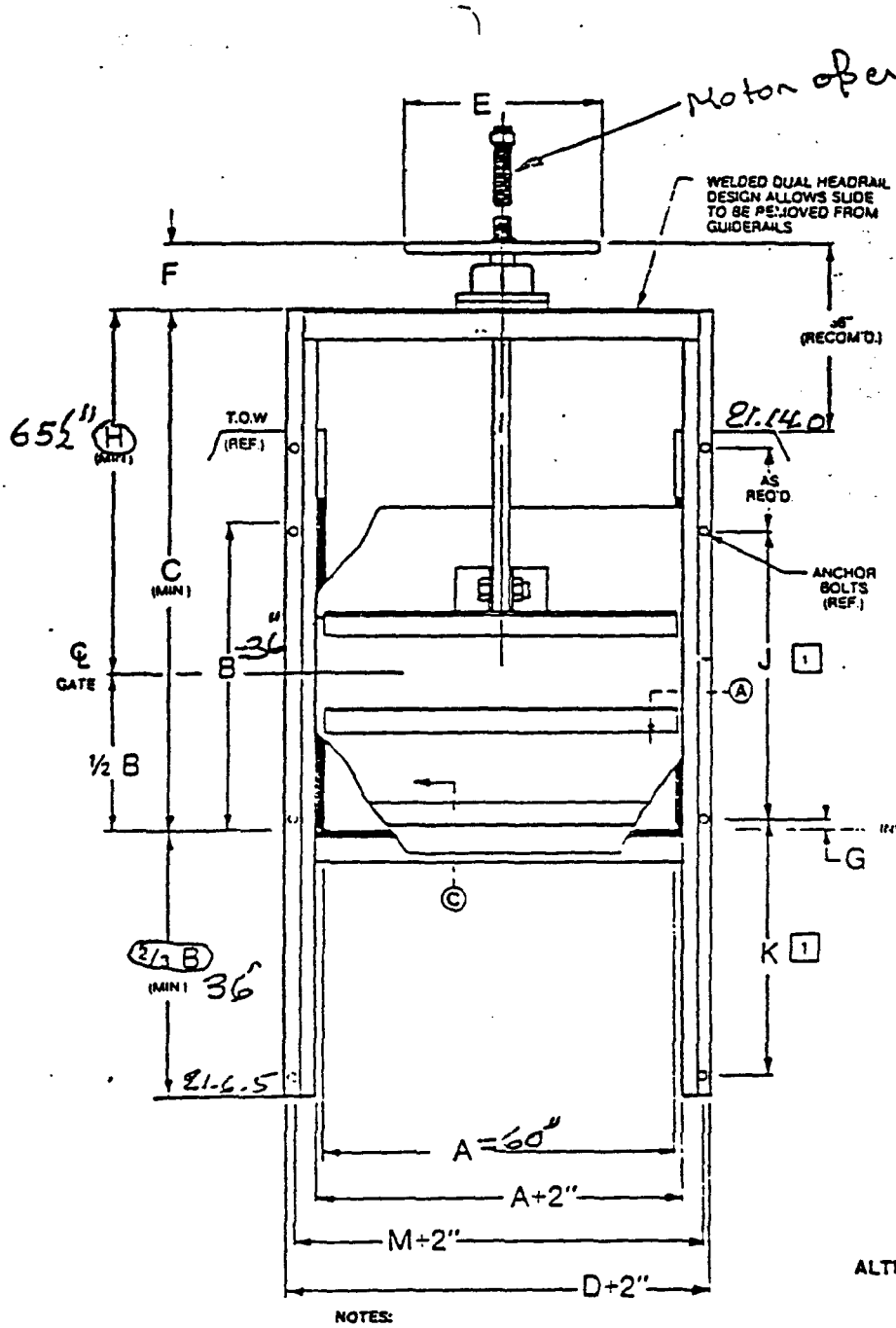

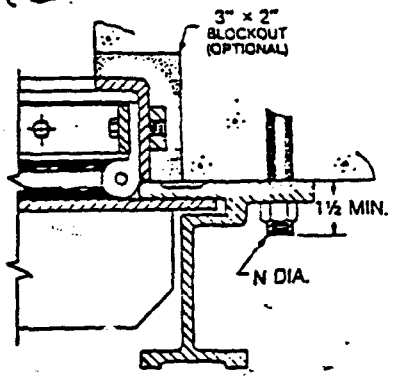

SECTION (A)

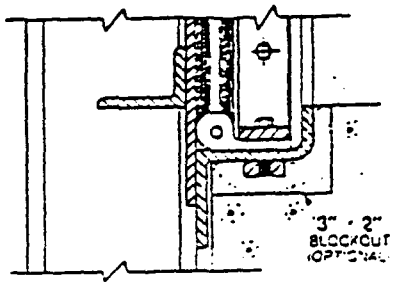

SECTION (C)

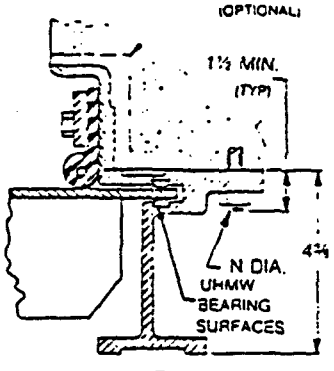

ALTERNATE SECTION (A1) [5]

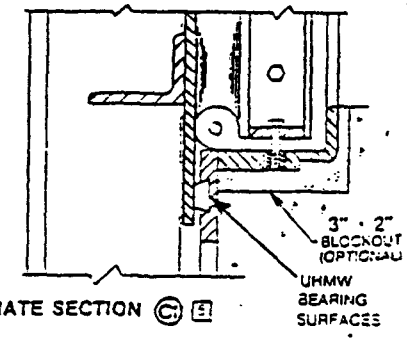

ALTERNATE SECTION (C1) [5]

NOTES:

[1] DIMENSIONS "J" & "K" ARE THE NUMBER OF SPACES AND THE DIMENSION BETWEEN ANCHOR BOLTS, RESPECTIVELY, AS LOCATED FROM ANCHOR BOLT SHOWN.

2. SEE DWG. NO. 0004, PGS. 1 THRU 3 FOR DIMENSION TABLES.

3. "J" — BULB SEALS ARE SLIGHTLY ADJUSTABLE AND VULCANIZED AT CORNERS.

4. FOR SEATING AND UNSEATING HEADS TO HEIGHT OF GATE.

✓ [5] ALTERNATE GATE MODEL AR-5fj-IY WITH UHMW POLYETHYLENE BEARING STRIPS.

MODEL	AR-5fj-IY DOWNWARD OPENING (WEIR) ALUMINUM SLIDE GATE WITH J-BULB SEAL	
SCALE	CATALOG DWG. NO.	REVISION NO.
NONE	0004 6 of 6	3

waterman INDUSTRIES, INC.

EXETER CA • LUBBOCK TX • GARDEN CITY KS • BOISE ID
MEMPHIS TN • GRAND ISLAND NB • INDIANAPOLIS IN
RED TOP WATER CONTROL GATES, VALVES and EQUIPMENT

NOTE: FOR PRELIMINARY DESIGN PURPOSES ONLY
DO NOT USE FOR INSTALLATION
UNLESS PART OF CERTIFIED & APPROVED SUBMITTAL

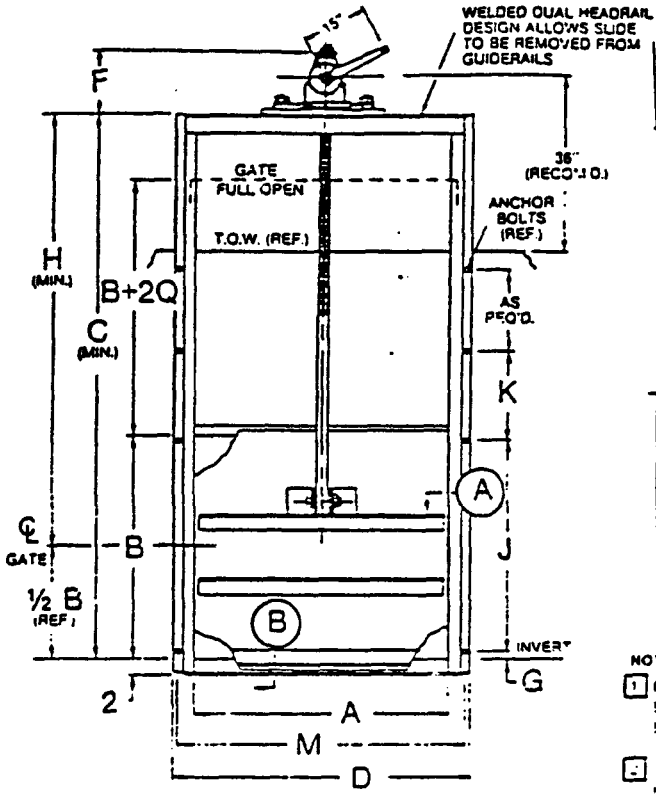

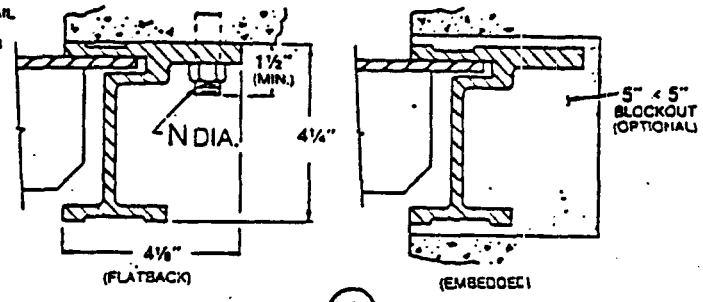

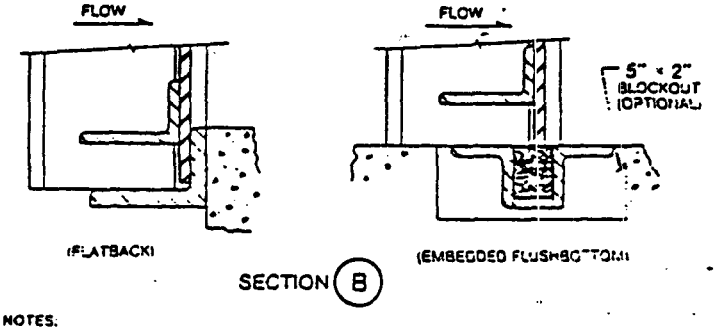

NOTES:

1. DIMENSIONS "J" & "K" ARE THE NUMBER OF SPACES AND THE DIMENSION BETWEEN ANCHOR BOLTS, RESPECTIVELY, AS LOCATED FROM ANCHOR BOLT SHOWN.
2. 88 DENOTES LIFT WITH BALL BEARINGS AND 3E-2:1 DENOTES LIFT WITH HANDCRANK. SEE PAGE 3 FOR GATE SHOWN WITH HANDCRANK LIFT.

GATE DIMENSIONS IN INCHES

A × B	C	D	E [2]	F	G	H	J [1]	K [1]	M	N
48 × 48	H - 24	56¼	30 88	6½	1½	78	3 @ 15	2 @ 16	54¾	⅝
48 × 54	H - 27	56¼	3E-2:1	6½	1	90	4 @ 13	2 @ 18	54¾	⅝
48 × 60	H - 30	56¼	3E-2:1	10	2	96	4 @ 14	2 @ 21	54¾	⅝
48 × 72	H - 36	56¼	3E-2:1	10	2	114	4 @ 17	2 @ 24	54¾	⅝
54 × 30	H - 15	62¼	24 88	6½	1	54	2 @ 14	1 @ 20	60¾	⅝
54 × 36	H - 18	62¼	24 88	6½	1	60	2 @ 17	2 @ 14	60¾	⅝
54 × 42	H - 21	62¼	30 88	6½	1½	72	3 @ 13	2 @ 15	60¾	⅝
54 × 48	H - 24	62¼	3E-2:1	6½	1½	84	3 @ 15	2 @ 16	60¾	⅝
54 × 54	H - 27	62¼	3E-2:1	10	1	90	4 @ 13	2 @ 18	60¾	⅝
54 × 60	H - 30	62¼	3E-2:1	10	2	96	4 @ 14	2 @ 21	60¾	⅝
54 × 72	H - 36	62¼	3E-4:1	10	2	114	4 @ 17	2 @ 24	60¾	⅝
60 × 30	H - 15	68¼	24 88	6½	1	54	2 @ 14	1 @ 20	66¾	⅝
60 × 36	H - 18	68¼	30 88	6½	1	60	2 @ 17	2 @ 14	66¾	⅝
60 × 42	H - 21	68¼	3E-2:1	6½	1½	72	3 @ 13	2 @ 15	66¾	⅝
60 × 48	H - 24	68¼	3E-2:1	10	1½	78	3 @ 15	2 @ 16	66¾	⅝
60 × 54	H - 27	68¼	3E-2:1	10	1	90	4 @ 13	2 @ 18	66¾	⅝
60 × 60	H - 30	68¼	3E-2:1	10	2	96	4 @ 14	2 @ 21	66¾	⅝
60 × 72	H - 36	68¼	3E-4:1	10	2	114	4 @ 17	2 @ 24	66¾	⅝
72 × 36	H - 18	80¼	3E-2:1	6½	1	60	2 @ 17	2 @ 14	78¾	⅝
72 × 42	H - 21	80¼	3E-2:1	10	1½	72	3 @ 13	2 @ 15	78¾	⅝
72 × 48	H - 24	80¼	3E-2:1	10	1½	78	3 @ 15	2 @ 16	78¾	⅝
72 × 54	H - 27	80¼	3E-2:1	10	1	90	4 @ 13	2 @ 18	78¾	⅝
72 × 60	H - 30	80¼	3E-2:1	10	2	96	4 @ 14	2 @ 21	78¾	⅝
72 × 72	H - 36	80¼	3E-2:1	11¼	2	114	4 @ 17	2 @ 24	78¾	⅝

MODEL	AR-5I-Y & AR-5e-Y EXTRUDED ALUMINUM SLIDE GATES	
SCALE	CATALOG DWG. NO.	REVISION NO.
NONE	0004 3 of 5	3

Waterman INDUSTRIES, INC.

EXETER, CA • LUBBOCK, TX • GARDEN CITY, KS • BOISE, ID
MEMPHIS, TN • GRAND ISLAND, NE • INDIANAPOLIS, IN
RED TOP WATER CONTROL GATES, VALVES and EQUIPMENT

NOTE: FOR PRELIMINARY DESIGN PURPOSES ONLY
DO NOT USE FOR INSTALLATION
UNLESS PART OF CERTIFIED & APPROVED SUBMITTAL

Description: **Flocculation Tank**

Number: 2 in series

Size: 9 ft. x 9 ft. x 7 ft.

Capacity: 3,030 gallons each

Operating Parameters:

Detention Time	15 minutes total
Mixers	2
Solids Removal	20 gpm
Influent Flow Rate	368 ~~390~~ gpm SF 11/15/91
Material of Construction	316 st. stl.

- NOT USED. FLOCCULATION TO BE PERFORMED IN CDF CELL #1. ALUM TO BE ADDED TO WASTEWATER IN TRANSFER LINE BETWEEN CDF (A,B,C,D,E) AND CDF CELL #1

The ERM Group

ERM-New England, Inc. 205 Portland Street • Boston, Massachusetts 02114 • (617) 742-8228

Project: NEW BEDFORD HOT SPOTS REMEDIATION — W.O. No. 209-01-03 — Sheet 1 of 1
Subject: DESIGN BASIS FLOCCULATION CHAMBER — By: JDF — Date: 5/1/91
Chkd. by: FS — Date: 5/2/91

BASIS:

REQUIRED DETENTION TIME = 15 MINUTES

FORWARD FLOW
350 GPM FROM EQUALIZATION TANK (CELL NO. 2)
18 ~~40~~ GPM FROM SAND FILTER RECYCLE
= ~~390~~ GPM ~~368~~ 368

VOLUME REQUIRED = ~~390~~ 368 GPM (15 MIN)
5,520 ~~= 5,850~~ GALLONS

ASSUME TWO UNITS IN SERIES – EACH UNIT TO HAVE A DETENTION TIME OF 7.5 MINUTES

ASSUME 5 FT SIDE WATER DEPTH WITH 2 FT FREEBOARD
ASSUME EACH CHAMBER SQUARE

DIMENSIONS OF EACH CHAMBER

VOLUME = L × W × H WHERE L = W

FLOCCULATION TO TAKE PLACE IN CDF CELL #1

$$\left(\frac{1\ FT^3}{7.48\ GAL}\right)\left(\frac{5{,}520\ \text{GALLONS}}{2}\right) = L^2 \times 5\ FT$$

$$73.8\ \cancel{78}\ FT^2 = L^2$$

$$8.6\ \cancel{8.8}\ FT = L \qquad \text{SAY } 9\ FT$$

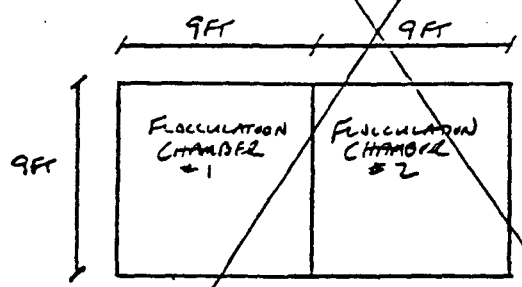

PLAN

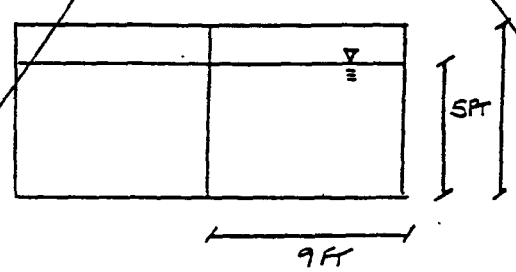

SECTION

NOTE: DRAWINGS NOT TO SCALE

THEREFORE FLOCCULATION TANKS TOGETHER ARE

9FT × 9FT × 7FT

AT/

Description: Alum Feed System

Size: Tote bins as required by contractor

Capacity: Minimum capacity required to dose wastewater stream at ~~25~~ ppm as aluminum sulfate.
TO BE DETERMINED

Operating Parameters:

Pump Flow Rate	0 to 8 gph
Pump Horsepower	1/3 hp
Mixing	Static (SM-100)

The ERM Group

ERM-New England, Inc. 205 Portland Street • Boston, Massachusetts 02114 • (617) 742-8228

Project: New Bedford Hot Spots — W.O. No. 208-01-09 — Sheet 1 of
Subject: Alum Dosage — By: DJM — Date: 6/19/91
Chkd. by: JDF — Date: 8/27/91

Basis: The Optimum Alum dose from treatability study was ~~25~~ ppm. Strengths of Commercial Alum = 8.3%, Dry Alum = 5.4 lb/gal. Dose is ~~25~~ ppm as $Al_2(SO_4)_3$

Calculate the Chemical feed in pounds per day for the Alum dose of ~~25~~ ppm.

$$\text{Chemical Feed (lbs/day)} = (\text{Flow, MGD})(\text{Dose, mg/l})(8.34 \text{ lbs/gal})$$

$$= (\cancel{350}\ \text{g/min})\left(\frac{60\ \text{min}}{\text{hr}}\right)\left(\frac{24\ \text{hr}}{\text{day}}\right)\left(\frac{1}{10^6}\right)(\cancel{25}\ \text{mg/l})(8.34\ \text{lb/gal})$$

$$= \cancel{105}\ \text{lbs/day} \quad \text{or} \quad \cancel{8407}\ \text{lb/90 days}$$

$$\text{Feed Rate (GPD)} = \frac{\text{Chemical Feed (lbs/day)}}{\text{Chemical Solution (lbs/gal)}}$$

$$= \frac{\cancel{105}\ \text{lbs/day}}{5.4\ \text{lb/gal}}$$

$$= \cancel{19.44}\ \text{gal/day} \quad \text{or} \quad \cancel{.81}\ \text{gal/hr}$$

- CALCULATION TO BE REVISED ~~BASED~~ IN TREATABILITY TESTING AND FINAL DURING DESIGN

ERM-New England, Inc. 205 Portland Street • Boston, Massachusetts 02114 • (617) 742-8228

Project NEW BEDFORD HOT SPOTS W.O. No. 209-01-05 Sheet 1 of
Subject ALUM DOSAGE By JDF Date 3/27/91
Chkd. by Date

BASIS: ANTICIPATED ALUM DOSE IS ~~25~~ PPM (AS $Al_2(SO_4)_3$)
STRENGTH OF COMMERICAL ALUM (AS Al_2O_3) IS 8.3%

MOLECULAR WEIGHT

$Al_2(SO_4)_3$

Al = 2 X 27 g/MOLE = 54 grams
S = 3 X 32 g/MOLE = 96 grams
O = 12 X 16 g/MOLE = 192 grams
342 grams

Al_2O_3

Al = 2 X 27 g/MOLE = 54 grams
O = 3 X 16 g/MOLE = 48 grams
102 grams

CHEMICAL DOSING RATE =

$$(25\ ppm)(350\ \tfrac{gal}{min})(1440\ \tfrac{min}{DAY})(8.34 \times 10^{-6}\ \tfrac{\#/DAY}{gal\ ppm})$$

= 105.1 #/DAY AS $Al_2(SO_4)_3$

= 3,407 #/30 DAYS AS $Al_2(SO_4)_3$

LIQUID ALUM FEED RATE =

$$\frac{\text{CHEMICAL FEED}\ \#/DAY}{\text{CHEMICAL SOLUTION}\ \#/GAL} = \frac{105.1\ \#/DAY\ AS\ Al_2(SO_4)_3}{5.4\ \#/GAL\ AS\ Al_2O_3 \left(\frac{342\ grams\ Al_2(SO_4)_3}{102\ grams\ Al_2O_3}\right)}$$

= 5.8 GAL/DAY OF 8.3% Al_2O_3 ALUM

= 0.24 GAL/HR OF 8.3% Al_2O_3 ALUM

— TO BE REVISED BASED ON FINAL FLOW RATE OF WASTEWATER AND DOSAGE DETERMINED DURING TREATABILITY TESTS.

- ERM TREATABILITY TEST RESULTS TO BE INCLUDED IN APPENDIX OF BD/OA.
- FOSTER WHEELER JAR TEST RESULTS TO BE INCLUDED IN APPENDIX OF BD/OA

FIGURE 4-1
TSS CONCENTRATIONS IN CLARIFIED SAMPLES

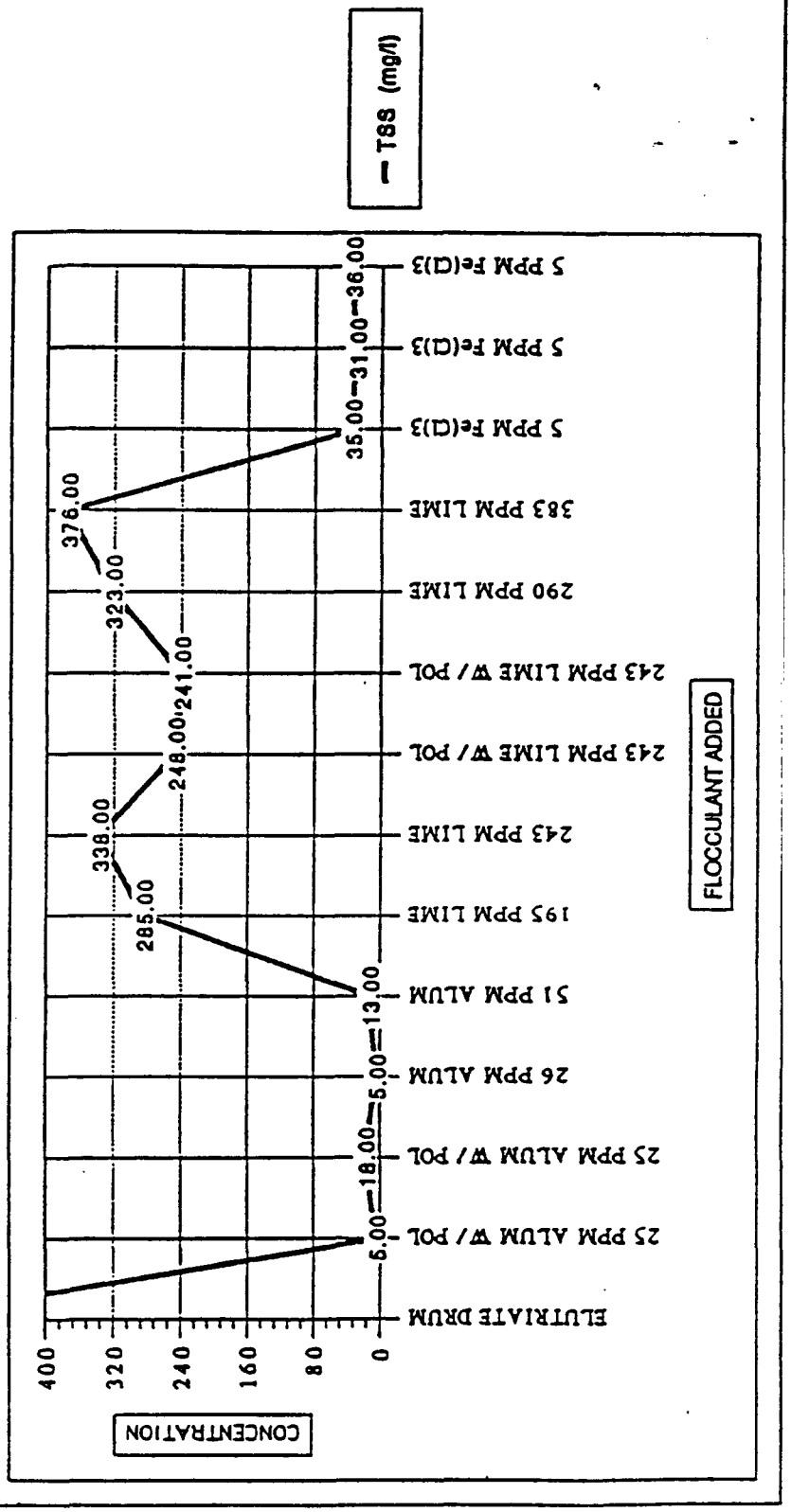

The ERM Group

28/

bidity removal is primarily a function of wastewater alkalinity. Therefore, the most accurate evaluation of coagulation requirements may be made through the performance of a jar test on a representative sample of the specific wastewater.

5. Calcining. Lime sludge may be thickened, dewatered, and calcined to convert the calcium carbonate to re-usable lime. Generally, calcining for reuse is economical only in larger plants where flows are greater than 38 000 m³/d (10 mgd). Although some investigators have reported that the slaking characteristics of lime deteriorate after it is calcined for reuse, other experiences have not shown this effect.[2]

Alum:—

1. Uses. Alum is the commonly used name for aluminum sulfate [$Al_2(SO_4)_3 \cdot 14 H_2O$]. It is widely used in water treatment practice but is also an excellent coagulant for removing suspended solids from domestic wastewater.

When a coagulant such as alum (or the iron salts) is to be incorporated in a new plant design, or used to improve BOD, suspended solids, and phosphorus removal in an existing plant, the question invariably arises as to where in the process flowsheet the chemical should be added. As a general rule, where no flash mix tanks are provided, alum should be added at a point where turbulence is present to insure rapid mixing. It is advantageous to build some flexibility into the plant design with respect to points of chemical addition, since this aspect may significantly affect process efficiency and economy. Addition of alum directly to an aeration tank will not adversely affect the biological process, but some build-up of aluminum compounds in the recirculated sludge may be expected.

TABLE 11-III. Strengths of Commercially Available Alum

Deg. Baumé	Alum Conc., % Al_2O_3	Density (lb/gal)	Dry Alum (lb/gal)
32.2	7.2	10.72	4.6
36.4	8.3	11.15	5.4

Note: lb/gal × 0.12 = kg/l.

TABLE 11-IV. Some Physical Characteristics of Dry Alum

Parameter	Alum Characteristics
Approx. composition	$Al_2(SO_4)_3 \cdot 14 H_2O$
Al_2O_3 content	17% (minimum)
Fe_2O_3	0.75% (maximum)
Insolubles	0.5% (maximum)
Hygroscopic	Very slightly
Form	Lump, ground, rice powder
Color	Ivory white
Weight (lb/cu ft):	
Lump	60–70
Ground	63–76
Rice	52–62
Powdered	38–45
Angle of repose (approx.):	
Ground	38–45 deg
Rice	33–38 deg
Powder	65 deg
Solubility [lb alum (17% Al_2O_3)/gal water]:	
32°F	7.9
60°F	8.4
100°F	9.1

Note: lb/cu ft × 16 = kg/m³; gal × 3.785 = l.

2. Types and handling considerations. Alum is available from chemical manufacturers in both liquid and dry form. Liquid alum is an aqueous solution of aluminum sulfate and is generally available commercially in two strengths (Table 11-III).

Liquid alum is a true solution containing less than 0.2 percent insolubles. Dry alum is a pale greenish- to cream-colored, powdered, granular, or lump material that dissolves in water to produce a solution with a pH of approximately 3.5 at 1 percent. The grade of dry alum used by the majority of water and wastewater plants is a mixture of standard ground alum and fines. In general, ground alum is easy to feed as it does not bulk or arch in hoppers. It is non-corrosive. The fines themselves are known as powdered alum. Powdered alum is generally not desirable for use in wastewater treatment since it is dusty and difficult to feed. Some physical properties

Description: **Polymer Blending Systems CF-100, CF-102** (OPTIONAL)

Size: -

Capacity: -

Operating Parameters:

Automatic Water Feed and Mixing	
Mixers	**Static**
Flow Rate	**0-2 gph neat polymer as required for solids removal**

- POLYMER ADDITION WAS NOT PERFORMED DURING HOT SPOT OPERATIONS AND WILL LIKELY NOT BE NEEDED FOR OU#1.

The ERM Group

ERM-New England, Inc. 205 Portland Street • Boston, Massachusetts 02114 • (617) 742-8228

Project: New Bedford Hot Spots — W.O. No. 208-01-09 — Sheet 1 of 2
Subject: Polymer Dosage — By: DJM — Date: 6/18/91
Chkd. by: JDF — Date: 8/27/91

① Compute polymer dosage rate to produce polymer concentration of 10 - 100 mg/l.

Assumptions ① Flow Rate = ~~390~~ 368 gpm
② 10 - 100 mg/l needed in flocculation tank.
③ Polymer Blending Unit generates 10 mg/mL soln.

Polymer Dosage, mg/min = (Flow, L/min)(Concentration, mg/L)

$$= \left(\cancel{390}\ 368\ \text{g/min}\right)\left(\frac{3.785\,L}{1\,gal}\right)\left(10\ \text{mg/l}\right)$$

$$= \cancel{14{,}762}\ 13{,}929\ \text{mg polymer/min}$$

@ 100 mg/l ⇒ polymer dosage = ~~147,620~~ 139,288 mg/min

∴ polymer dosage is from ~~14,762~~ 13,929 to ~~147,620~~ 139,288 mg/min

② Calculate Polymer Feed Rate

$$\text{Polymer Feed Rate} = \frac{\text{Polymer Dosage, mg/min}}{\text{Polymer Concentration, mg/ml}}$$

at 10 mg/l, Feed Rate = $\frac{\cancel{14{,}762}\ 13{,}929\ \text{mg/min}}{10\ \text{mg/ml}} = \cancel{1476.2}\ 1392.9\ \text{ml/min}$

convert to gal/hr

$$\left(\cancel{1476.2}\ 1392.9\ \text{ml/min}\right)\left(\frac{60\ \text{min}}{\text{hr}}\right)\left(\frac{1\ \text{gal}}{3{,}785\ \text{ml}}\right) = \cancel{23.4}\ 22.1\ \text{gal/hr.}$$

@ 100 mg/l, Feed Rate = $\frac{\cancel{147{,}620}\ 139{,}288\ \text{mg/min}}{10\ \text{mg/ml}} = \cancel{14{,}762}\ 13{,}928.8\ \text{ml/min}$

or ~~234~~ 220.8 gal/hr.

ERM-New England, Inc. 205 Portland Street • Boston, Massachusetts 02114 • (617) 742-8228

Project: New Bedford Hot Spots — W.O. No. 208-01-09 — Sheet 2 of 2
Subject: Polymer Dosage — By: DTM — Date: 6/18/91
Chkd. by: JDF — Date: 9/27/91

(3) Calculate amount of polymer needed per day.

Total Volume treated = (~~390~~ 368 gal/min)(60 m / 1 hr)(24 hr / day)

= ~~561,600~~ 529,920 gals/day

= (~~561,600~~ 529,920 gal/day)(3.785 L / 1 gal) = ~~2,125,656~~ 2,005,747 L/day

For Polymer concentration of 10 mg/l

Polymer, lbs = (Polymer Concentration)(Volume)

= (.01 g/L)(1 lb / 454 g)(~~2,125,656~~ 2,005,747 L/day) = ~~46.8~~ 44.2 lb/day

For Polymer concentration of 100 mg/l ⇒ ~~468~~ 442 lb/day

In Summary

	10 mg/l	100 mg/l
Polymer Dosage Rate, mg/min	~~14,762~~ 1392.9	~~147,620~~ 13,928
Polymer Feed Rate, gal/hr	~~23.4~~ 22.1	~~234~~ 220.8
Polymer Usage Rate, #/d	~~46.8~~ 44.2	~~468~~ 442

11/15/91

TO BE INCLUDED IN APPENDIX OF BD/DA.

4.3.3 *Chemical Addition/Flocculation*

The treatability studies indicated that the following chemical and flocculation treatment is recommended:

- Alum will be dosed at 25 ppm (as aluminum sulfate) to coagulate suspended solids and remove dissolved metals.

- Magnifloc 1596C, dosed at between 10 and 100 ppm, enhances flocculation of the coagulated material. This polymer may be added after rapid mixing of the inorganic coagulant (alum), but prior to the flocculation tank if it is deemed necessary to optimize operating parameters.

- Flocculation of 15 minutes is required to maximize flocculation of smaller coagulated particles.

- A portion of the flocculated material will form particles of sufficient size that they will settle in the flocculation tank under slow mixing conditions. The flocculation tank should be provided with an underdrain or other items for solids removal. Solids should be transferred to Cell No. 1 to be treated with the other solids.

4.3.4 *Secondary Settling - Cell No. 3*

Results of the treatability study indicate the treatment system should be designed for:

- The secondary settling cell should have a minimum 15 minutes detention time to ensure capture of settleable materials.

- The wastewater leaving the secondary clarifier will have very low suspended solids concentrations (below 10 mg/l).

Magnifloc® 1596CSP

Flocculant

Type: Emulsion, Catonic

MAGNIFLOC 1596CSP flocculant is a very high molecular weight, highly charged cationic flocculant for use in sludge conditioning and waste treatment processes. Especially recommended for use in secondary clarification.

TYPICAL PROPERTIES

Appearance	Opaque liquid
Specific gravity	1.00 ± .04
Typical Bulk Viscosity as is, at 25°C (77°F)	500-1500 cps
Typical Solution Viscosity at 25°C, cps	
0.5% 300 (Brookfield spindle #3 at 60 rpm)	
1.0% 650 (Brookfield spindle #3 at 60 rpm)	
2.0% 1500 (Brookfield spindle #3 at 60 rpm)	
Freezing point	0°F (−18°C)
Flash point, Closed cup	200°F (93°C)
Shelf Life	6 months

Environmental Properties*

BOD_5	~540 mg/L
COD	~4,500 mg/L

*1% solution

ADVANTAGES

Economical
- Handling costs are minimized
- Effective at low dosage levels
- Performs well under high pH conditions

Convenient
- Helps maintain clean, safe, dissolving tank stations
- Easy to handle and feed
- Dissolves rapidly, leaving no insolubles ("fish eyes")
- Compatible with continuous automatic chemical feed systems
- Suitable for bulk storage

PRINCIPAL USES

MAGNIFLOC 1596CSP flocculant is a highly effective, high MW cationic polyelectrolyte which may be used as a coagulant, settling aid, or a dewatering aid. MAGNIFLOC 1596CSP flocculant is recommended for liquid-solids separation processes:

- Secondary Clarification - increases settling rate resulting in lower solids carryover.
- Belt Press, Screw Press and Vacuum Filtration - increases production rates, cake solids content, and solids capture.
- Centrifugation - increases throughput along with improved solids recovery.
- Sludge Thickening - improves sludge compaction, settling rates, and effluent water quality.

CYANAMID

American Cyanamid Company
Specialty Polymers Department
Paper Chemicals Department
Wayne, New Jersey 07470

WTT-1019

©Copyright 1989

Application

A stock solution of MAGNIFLOC 1596CSP flocculant should be metered to the system by use of a corrosion-resistant, positive-displacement pump and diluted 100:1 with clean water prior to being fed to the system. Best results are obtained by dispersing the feed stream and promoting high turbulence for rapid mixing beyond the addition point.

Preparation of Stock Solution

To ensure product uniformity, agitate MAGNIFLOC 1596CSP flocculant thoroughly in the drum with either a drum stirrer or a continuous recirculating pump.

For batch make-up, the sue of both a make-up tank and a holding or feed tank is recommended. The size of the tanks will depend upon the amount of polymer to be used, the desired feed concentration, and the number of preparations per day. Depending on ionic strength of the water and the capabilities of the make-up equipment, solutions of up to 2% concentration may be prepared using make-up water below 120°F (50°C). Generally speaking, waters with high ionic strength allow for preparation of high solution concentration.

Health and Safety Information

Although MAGNIFLOC 1596CSP flocculant is not acutely toxic by oral or dermal administration, it may cause skin burns and eye irritation. Care should be exercised to avoid spilling of the liquid into one's boots or shoes.

Before handling this material, read the corresponding American Cyanamid Company Material Safety Data Sheet for safety, health and environmental data.

Handling and Storage

MAGNIFLOC 1596CSP flocculant should be stored at temperatures between 40° and 90°F (5°–30°C). If the product freezes, it must be thawed and mixed thoroughly before use.

Storage in glass, stainless steel, plastic or epoxy-lined vessels is recommended. Do not use iron, copper or aluminum in storage or delivery systems.

Spilled product is very slippery and should be scooped and/or wiped up prior to flushing with water.

Shipping

MAGNIFLOC 1569CSP liquid flocculant is shipped in 55 gallon (200 liter) nonreturnable, lined steel drums or 275 gallon bulk drums, F.O.B. Mobile, AL. It is shipped under a protect from freezing classification. For information on bulk delivery, contact your Cyanamid Sales Representative or nearest Cyanamid Sales Office.

Important Notice

The information and statements herein are believed to be reliable, but are not to be construed as a warranty or representation for which we assume legal responsibility. Users should undertake sufficient verification and testing to determine the suitability for their own particular purpose of any information or products referred to herein. NO WARRANTY OF FITNESS FOR A PARTICULAR PURPOSE IS MADE. Nothing herein is to be taken as permission, inducement or recommendation to practice any patented invention without a license.

CYANAMID

89-4-625 6/89

American Cyanamid Company
Industrial Products Division
Water Treating Chemicals
Wayne, New Jersey 07470

CYANAMID

MATERIAL SAFETY DATA

MSDS NO. 4900-06
DATE: 05/16/90

PRODUCT IDENTIFICATION

PRODUCT NAME:	**MAGNIFLOC® 1596C Flocculant**
SYNONYMS:	Cationic polyacrylamide in water-in-oil emulsion
CHEMICAL FAMILY:	Cationic polyacrylamide in water-in-oil emulsion
MOLECULAR FORMULA:	Mixture
MOLECULAR WGT.:	Mixture

WARNING

WARNING! CAUSES SKIN IRRITATION
MAY CAUSE EYE IRRITATION

OSHA REGULATED COMPONENTS

COMPONENT	CAS. NO.	%	TWA/CEILING	REFERENCE
Petroleum distillate hydrotreated light	064742-47-8	~24	400 ppm	OSHA

NFPA HAZARD RATING

Fire 1
Health 2 0 Reactivity
Special

FIRE: Material that must be preheated before ignition can occur.
HEALTH: Materials which on intense or continued exposure could cause temporary incapacitation or possible residual injury unless prompt medical treatment is given.
REACTIVITY: Materials which in themselves are normally stable, even under fire exposure conditions, and which are not reactive with water.

HEALTH HAZARD INFORMATION

EFFECTS OF OVEREXPOSURE:

The acute oral (rat) and acute dermal (rabbit) LD50 values are both estimated to be greater than 10 ml/kg.
Direct contact with this material can cause moderate skin and mild eye irritation.

Toxicology information on regulated components of this product is as follows:
Acute overexposure to petroleum distillate vapors may cause eye and throa irritation. On direct skin contact, petroleum distillate may produce a severe skin irritation. Prolonged repeated exposure to petroleum distillate vapor may cause central nervous system damage as well as heart and blood disorders. The oral LD50 in the rat for various distillates ranges from 4.5 to greater than 25 ml/kg, and the inhalation LC50 in rats is about 15000 ppm. Aspiration of petroleum distillate may cause chemical pneumo Overexposure to vapor may cause dizziness, drowsiness, headache, and nausea.

FIRST AID:

In case of skin contact, remove contaminated clothing without delay. Flush skin thoroughly with water. Do not reuse clothing without laundering.
In case of eye contact, immediately irrigate with plenty of water for 15 minutes.

EMERGENCY PHONE: 201/835-3100

AMERICAN CYANAMID COMPANY, 1 CYANAMID PLAZA, WAYNE, NEW JERSEY 07470

MAGNIFLOC® 1596C Flocculant

EXPOSURE CONTROL METHODS	Where this material is not used in a closed system, good enclosure and local exhaust ventilation should be provided to control exposure. Food, beverages, and tobacco products should not be carried, stored, or consumed where this material is in use. Before eating, drinking, or smoking, wash face and hands with soap and water. Avoid skin contact. Protective clothing such as impervious gloves, apron, workpants, long sleeve work shirt, or disposable coveralls are recommended to prevent skin contact. For operations where eye or face contact can occur, wear eye protection such as chemical splash proof goggles or face shield. Eyewash equipment and safety shower should be provided in areas of potential exposure. Where exposures are below the Permissible Exposure Limit (PEL), no respiratory protection is required. Where exposures exceed the PEL, use respirator approved by NIOSH for the material and level of exposure. See "GUIDE TO INDUSTRIAL RESPIRATORY PROTECTION" (NIOSH).

FIRE AND EXPLOSION HAZARD INFORMATION	FLASH POINT:	>200 F (>93.3 C)
	METHOD:	Pensky-Martens Closed Cup
	FLAMMABLE LIMITS (% BY VOL):	Not Available
	AUTOIGNITION TEMP:	Not Available
	DECOMPOSITION TEMP:	Not Available
	FIRE FIGHTING:	Use water spray, carbon dioxide or dry chemical to extinguish fires. Use water to keep containers cool. Wear self-contained, positive pressure breathing apparatus and full fire-fighting protective clothing. See Exposure Control Methods for special protective clothing.

REACTIVITY DATA	STABILITY:	Stable
	CONDITIONS TO AVOID:	None known
	POLYMERIZATION:	Will Not Occur
	CONDITIONS TO AVOID:	None known
	INCOMPATIBLE MATERIALS:	Strong oxidizing agents. This material reacts slowly with iron, copper and aluminum, resulting in corrosion and product degradatio
	HAZARDOUS DECOMPOSITION PRODUCTS:	Thermal decomposition or combustion may produce carbon monoxide, carbon dioxide, ammonia, oxides of nitrogen and/or hydrogen chloride vapor.

PHYSICAL PROPERTIES	APPEARANCE AND ODOR:	White, viscous, opaque liquid; slight hydrocarbon odor
	BOILING POINT:	~347 F; ~175 C (value for oil phase)
	MELTING POINT:	Similar to water
	VAPOR PRESSURE:	Similar to water
	SPECIFIC GRAVITY:	~1.0
	VAPOR DENSITY:	Similar to water
	% VOLATILE (BY VOL):	~60
	OCTANOL/H_2O PARTITION COEF.:	Not Available
	pH:	4-6(in water)

Description: CDF Cell No. 3

Area: 7,700 sf

Capacity: 430,000 gallons

Operating Parameters:

Detention Time		21.4 hours
Weir Loading Rate		-
Overflow Rate		-
Freeboard		2.5 ft.
Chemical Addition		H_2O_2 at weir
Influent Flow Rate	368	~~390~~ gpm
Effluent Flow Rate	368	~~390~~ gpm
Minimum Operating Level		11.17 ft.

JT 1/15/91

- TO BE USED FOR STORAGE OF EFFLUENT WHICH DOES NOT MEET DISCHARGE STANDARDS.
- WATER WILL BE PUMPED BACK INTO CDF CELL #1 FOR TREATMENT
- DESIGN INFORMATION WILL BE SUMMARIZED IN CALCULATIONS FOR NEW WTP DESIGN

ERM-New England, Inc. 205 Portland Street • Boston, Massachusetts 02114 • (617) 742-8228

Project NEW BEDFORD HOT SPOT REMEDIATION W.O. No. 208-01-08 Sheet 1 of 3
Subject DESIGN BASIS By JDF Date 5/1/91
CELL NO. 3 SECONDARY SETTLING Chkd. by ES Date 5/2/91

BASIS:

FLOW RATE = ~~390~~ 368 GPM (350 GPM + ~~40~~ 18 GPM - RECYCLE FROM SAND FILTER) 11/15/91

FOR ALUM FLOC - THE LOADING RATE IS FROM 600 TO 1,200 GAL/FT²·DAY
PEAK OF 1,200 GAL/FT²·DAY
(FROM METCALF + EDDY SECOND EDITION p. 356 TABLE 8-11)

WEIR OVERFLOW RATE = 10,000 GAL/LF·DAY

AREA CELL NO. 3 (REFER TO ATTACHED FIGURE)
LENGTH = 110 FT
WIDTH = 70 FT

AREA = 110 FT (70 FT) = 7,700 SF

INLET WEIR ~~70 FT~~ INLET DISCHARGES THROUGH DISCHARGE PIPE
EFFLUENT WEIR 100 FT

WEIR OVERFLOW RATE = $\frac{(\cancel{390}\ 368\ GPM)(1440\ MIN/DAY)}{100\ \cancel{70}\ FT}$ = ~~5,616~~ 5,299.2 ~~3,025~~ GAL/LF·DAY

WEIR IS WITHIN STANDARD RATE

SECONDARY CLARIFIER OVERFLOW RATE

368 = $\frac{(\cancel{390}\ GPM)(1440\ MIN/DAY)}{7,700\ SF}$ = ~~73~~ 68.8 GAL/SF·DAY

SECONDARY CLARIFIER OVERFLOW RATE IS BELOW STANDARD RATES - SYSTEM IS SUFFICIENTLY SIZED.

AVAILABLE STORAGE VOLUME

MAXIMUM WATER LEVEL - OPERATING 13 FT
BOTTOM ELEVATION = 5.5 FT
TO MAINTAIN 30 MINUTES DETENTION TIME IN CELL NO. 3 NEED VOLUME OF ($\cancel{390}$ 368 GPM)(30 MIN) = ~~11,700~~ 11,040 GALLONS
= ~~1,565~~ 1476 CF

REQUIRED DEPTH OF WATER = $\frac{\cancel{1,565}\ 1476\ CF}{7,700\ SF}$ = 0.2 FT

STORAGE VOLUME AVAILABLE TO HANDLE SETTLED MATERIAL

DEPTH = 13 FT - 0.2 FT - 5.5 FT = 7.3 FT

VOLUME = 7.3 FT (7,700 SF) = 56,210 CF
= 2,080 CY

2 OF 3 S1

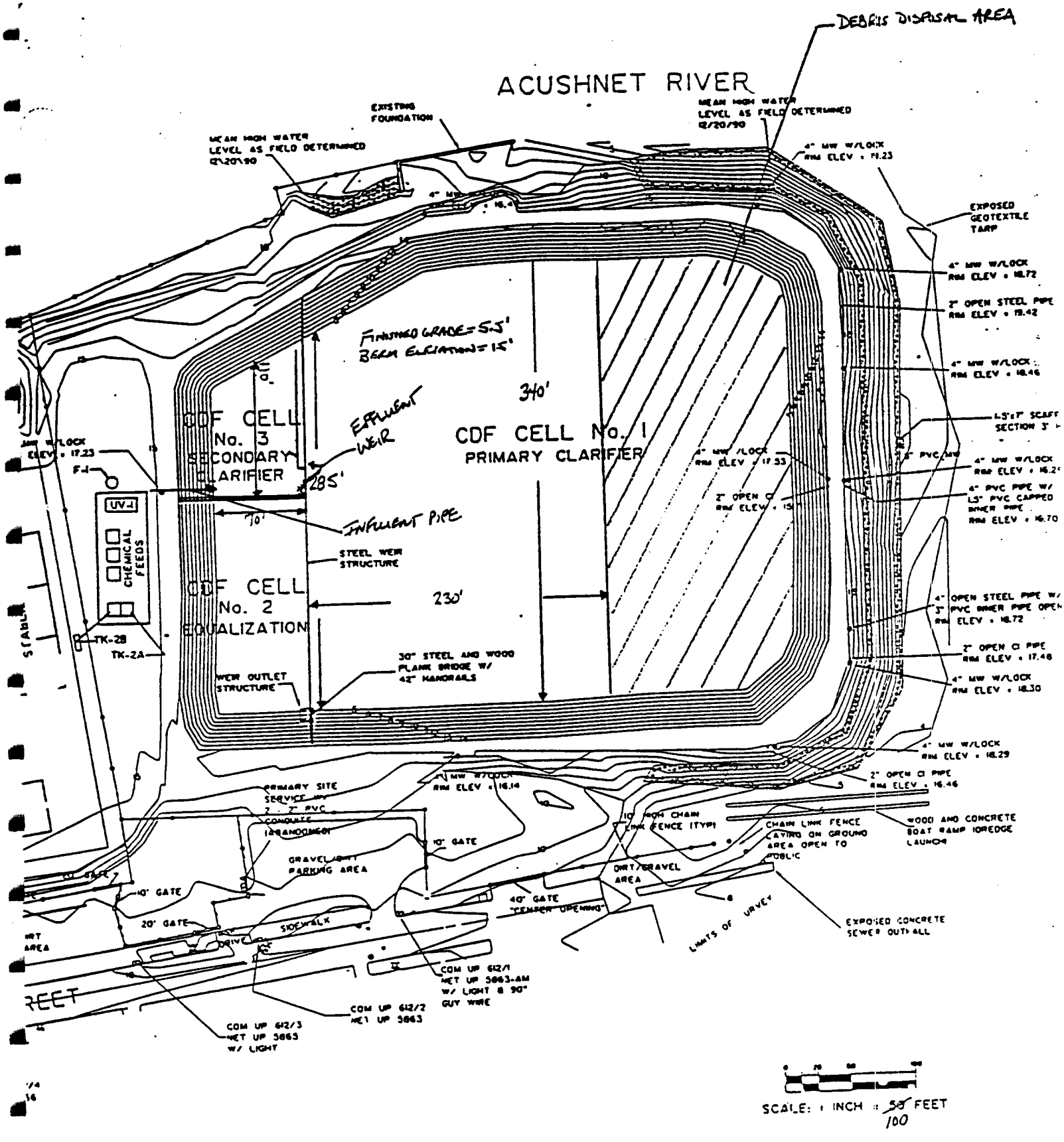
DEBRIS DISPOSAL AREA
ACUSHNET RIVER
EXISTING FOUNDATION
MEAN HIGH WATER LEVEL AS FIELD DETERMINED 12/20/90
MEAN HIGH WATER LEVEL AS FIELD DETERMINED 12/20/90
4" MW W/LOCK RIM ELEV = 19.23
EXPOSED GEOTEXTILE TARP
4" MW W/LOCK RIM ELEV = 18.72
2" OPEN STEEL PIPE RIM ELEV = 19.42
4" MW W/LOCK RIM ELEV = 18.46
FINISHED GRADE = 5.5'
BERM ELEVATION = 15'
340'
CDF CELL No. 3 SECONDARY CLARIFIER
EFFLUENT WEIR
CDF CELL No. 1 PRIMARY CLARIFIER
285'
70'
INFLUENT PIPE
STEEL WEIR STRUCTURE
CDF CELL No. 2 EQUALIZATION
230'
UV-1
CHEMICAL FEEDS
F-1
TK-2B
TK-2A
30" STEEL AND WOOD PLANK BRIDGE W/ 42" HANDRAILS
WEIR OUTLET STRUCTURE
4" MW W/LOCK RIM ELEV = 17.23
4" MW W/LOCK RIM ELEV = 17.33
4" PVC PIPE W/ 1.5" PVC CAPPED INNER PIPE RIM ELEV = 16.70
4" OPEN STEEL PIPE W/ 3" PVC INNER PIPE OPEN RIM ELEV = 18.72
2" OPEN CI PIPE RIM ELEV = 17.48
4" MW W/LOCK RIM ELEV = 18.30
4" MW W/LOCK RIM ELEV = 18.29
2" OPEN CI PIPE RIM ELEV = 16.46
4" MW W/LOCK RIM ELEV = 16.14
PRIMARY SITE SERVICE
2" PVC CONDUIT
GRAVEL PARKING AREA
10" GATE
20" GATE
SIDEWALK
DRIVE
10' HIGH CHAIN LINK FENCE (TYP)
CHAIN LINK FENCE LAYING ON GROUND AREA OPEN TO PUBLIC
WOOD AND CONCRETE BOAT RAMP (DREDGE LAUNCH)
DIRT/GRAVEL AREA
40' GATE "TENSION OPENING"
LIMITS OF SURVEY
EXPOSED CONCRETE SEWER OUTFALL
COM UP 612/1 NET UP 5863-AM W/ LIGHT & 90" GUY WIRE
COM UP 612/2 NET UP 5863
COM UP 612/3 NET UP 5863 W/ LIGHT
SCALE: 1 INCH = 50 100 FEET

ERM-New England, Inc. 205 Portland Street • Boston, Massachusetts 02114 • (617) 742-8228

Project: NEW BEDFORD HOT SPOTS REMEDIATION — W.O. No. 208-01-08 — Sheet 3 of 3
Subject: DESIGN BASIS — By: JDF — Date: 5/2/91
CELL NO. 3 SECONDARY SETTLING — Chkd. by: FS — Date: 5/2/91

ESTIMATE OF SETTLABLE MATERIAL

FLOW RATE = ~~360~~ 350 GPM

WASTEWATER TSS CONCENTRATION = 250 PPM — ALUM DOSE = 25 PPM

REDUCTION IN TDS CONCENTRATION = 2000 PPM

SOLIDS REMOVAL IN CELL NO. 3 = 98%

SOLIDS SPECIFIC GRAVITY = 1.1

$$\text{SETTLED SOLIDS} = (\cancel{360}\ 350\ \text{GPM})(2000 + 250 + 25\ \text{PPM})(0.98)(3.785\ \text{L/GAL})(1440\ \text{MIN/DAY})\left(\frac{\text{GM}}{1000\ \text{MG}}\right)\left(\frac{\#}{454\ \text{GM}}\right)(1.1)$$

$$= \cancel{11,482}\ 10,834.8\ \#/\text{DAY}$$

$$\text{TOTAL SOLIDS} = 80\left(\cancel{11,482}\ 10,834.8\ \#/\text{DAY}\right) = \cancel{918,600}\ 866,783\ \# = \cancel{459.3}\ 433.4\ \text{TONS}$$

VOLUME OF SOLIDS

ASSUME = 30% SOLIDS

$$\text{VOLUME} = \frac{\left(\cancel{918,600}\ 866,783\ \#\right)\left(\frac{1\ \text{GAL}}{8.34\ \#}\right)\left(\frac{1\ \text{CF}}{7.48\ \text{GAL}}\right)}{0.30} = \cancel{49,100}\ 46,315\ \text{CF} = \cancel{1,819}\ 1,715\ \text{CY}$$

SAY ~~4900~~ 1,750 CY

THEREFORE THERE IS SUFFICIENT VOLUME TO STORE SOLIDS THAT WILL SETTLE IN CELL NO. 3

HOWEVER, SHOULD SOLID CAPTURE IN CDF CELL EXCEED ANTICIPATED AMOUNT, OR SOLIDS DO NOT ACHIEVE 30% CONCENTRATION, THEN SOME OF THE SOLIDS MAY NEED TO BE TRANSPORTED TO CDF CELL NO. 1 FOR TEMPORARY STORAGE.

- WILL BE RECALCULATED BASED ON SIZING OF CELL AS SECONDARY SETTLING BASIN.

41

Description: **Hydrogen Peroxide Feed System CF-101**

Size: **2,500-gallon tank for 50% H_2O_2**

Capacity: TANK SIZE TO BE ~~RE-SIZE~~ CHANGED TO ACCOMADATE H_2O_2 FOR ALL WTP SYSTEMS

Operating Parameters:

Pump Flow Rate **~~2~~ @ 2 gph**

ERM-New England, Inc. 205 Portland Street • Boston, Massachusetts 02114 • (617) 742-8228

Project NEW BEDFORD HOT SPOTS W.O. No. 209-01-09 Sheet 1 of 1
Subject HYDROGEN PEROXIDE FEED TO REMOVE SOLUBLE IRON By JDF Date 9/27/91
Chkd. by _____ Date _____

BASIS: FORWARD FLOW = ~~390~~ 368 GPM

H_2O_2 DOSING RATE ~~2~~ GPM (50% H_2O_2)

H_2O_2 CONCENTRATION IN WASTEWATER =

$$\frac{(2\ \text{GAL/HR})(50\%)(34\ \text{GM/MOLE})(1000\ \text{mg/g})}{(\cancel{390}\ 368\ \text{GPM})(60\ \text{MIN/HR})(3.785\ \text{L/GAL})} = \cancel{0.41}\ \cancel{0.93}\ \text{mg/L}$$

$$= \cancel{0.4}\ \text{ppM}$$

DOSAGE OF H_2O_2 MAY NEED TO BE INCREASED/LOWERED TO ADDRESS FIELD CONDITIONS

Description: **F-100 Continuous Backwash Sand Filter**

Size: 9 ft. Diameter

Capacity: 103 Cu. Ft. Media

Operating Parameters:

Normal Flow (EXIT FLOW)	350 gpm
Normal Pressure Drop	18-24 inches H_2O
Peak Flow	384 gpm
Peak Pressure Drop	-
Backwash Flow Rate	18 ~~39~~ gpm 94 11/5/91
Backwash Time	Continuous
Filtration Area	64 sf
Height	25'-4"
Air Consumption	3-4 scfm @ 15-25 psig
Inlet/Outlet Pipe	6 inch
Filter Retention	10 micron

- ADDITIONAL SAND FILTER SYSTEMS TO BE EVALUATED (I.E., VONTASAND SYSTEM)

The ERM Group

44

DynaSand Filter
The Proven Concept in Sand Filtration

The DynaSand Filter is a continuous backwash, upflow, deep-bed granular media filter. The filter media is continuously cleaned by recycling the sand internally through an airlift pipe and sand washer. The regenerated sand is redistributed on top of the sand bed, allowing for a continuous uninterrupted flow of filtrate and reject (backwash) water.

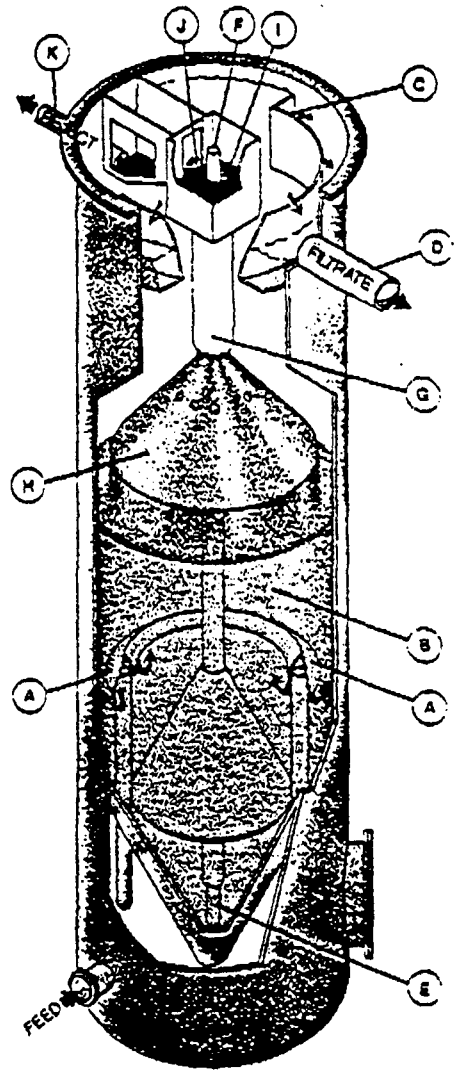

Feed is introduced into the bottom of the filter, then flows upward through a series of riser tubes and is evenly distributed into the sand bed through the open bottom of an inlet distribution hood (A) (Fig. 1). The influent flows upward, through the downward moving sand bed (B), with the solids being removed. The clean filtrate exits from the sand bed, overflows a weir (C), and is discharged from the filter (D). Simultaneously, the sand bed, along with the accumulated solids, is drawn downward into the suction of an airlift pipe (Fig. 2) which is positioned in the center of the filter. A small volume of compressed air is introduced into the bottom of the airlift (E). The air lifts the dirty sand up the airlift pipe, and air scours the sand at a rate of 100 to 150 SCFM/ft.^{2}. The impurities are scoured loose from the sand during this violently turbulent upward flow. Upon reaching the top of the airlift (F), the dirty slurry spills over into the central reject compartment (I). The sand is returned to the sand bed through the gravity washer/separator (G) which allows the fast settling sand to penetrate, but not the dirty liquid. The washer/separator is placed concentrically around the upper part of the airlift and consists of several stages to prevent short circuiting (Fig. 3). By setting the filtrate weir (C) above the reject weir (J), a steady stream flows upward, countercurrent to the sand, through the washer section and cleans the sand at a backwash loading rate of 50-100 gpm/ft.^{2}. A continuous reject flow exits near the top of the filter (K), carrying away the dirt and impurities removed in the filter. Since the sand has a higher settling velocity than the dirt particles, it is not carried out of the filter. The clean sand is redistributed by means of a sand distribution cone (H). The sand bed is continuously cleaned while both a continuous filtrate and a continuous reject stream are produced.

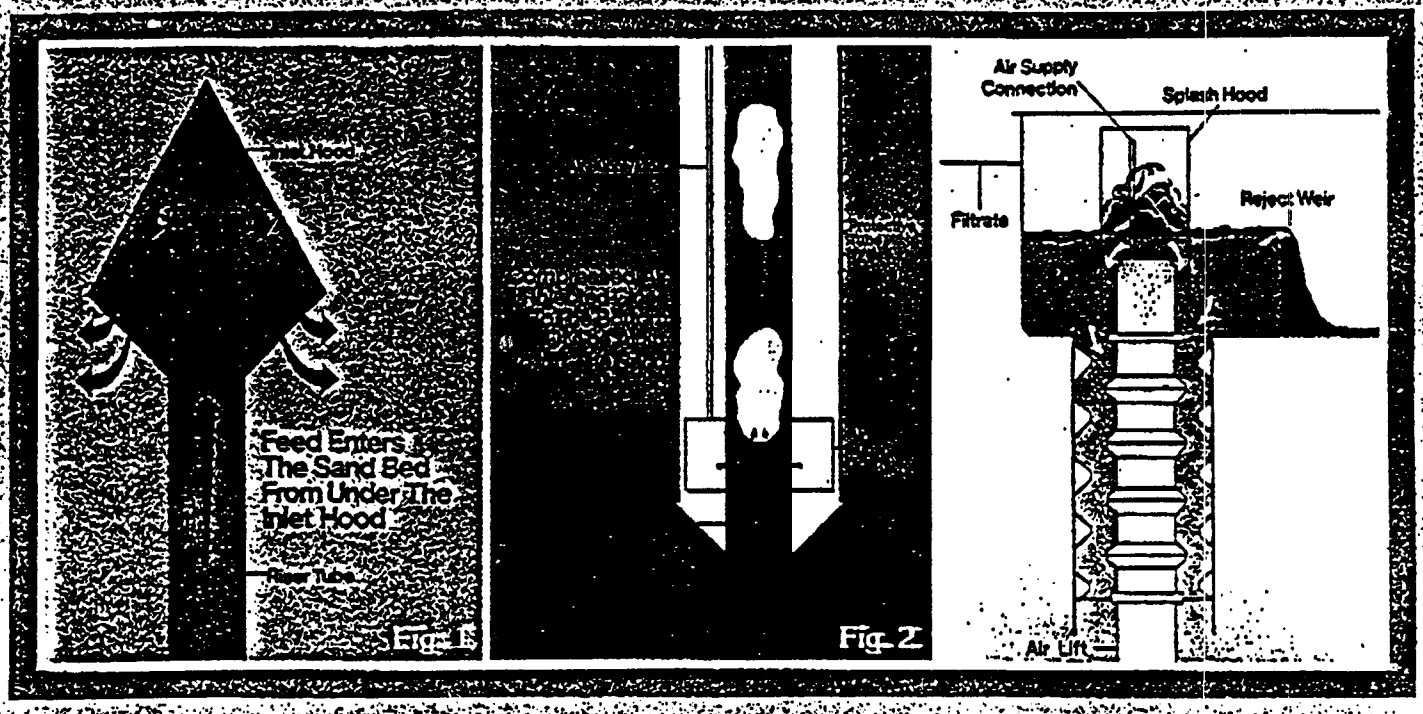

Features and Benefits

Continuously Cleaned Sand Bed	No shutdown for backwash cycles Elimination of ancillary equipment No flow control valves, splitter boxes, backwash controls Elimination of mud balls
No Moving Parts	Little operator attention or maintenance required
Low Pressure Drop	Easily gravity fed (pressure drop less than 24") Low power consumption
Single Media	Eliminates internal screens, grids, underdrains, etc.
High Solids Capability	Handles upstream upsets more easily Improves loading rates where loading is limited by solids capacity
Continuous Reject (Backwash)	Eliminates backwash holding tanks, high volume pumps Small continuous stream easily returned to process

Standard Features for Packaged Units

Epoxy painted carbon steel or FRP tanks

All stainless and FRP internals

Air control panel

Standard (40") or deep-bed (80") filtration

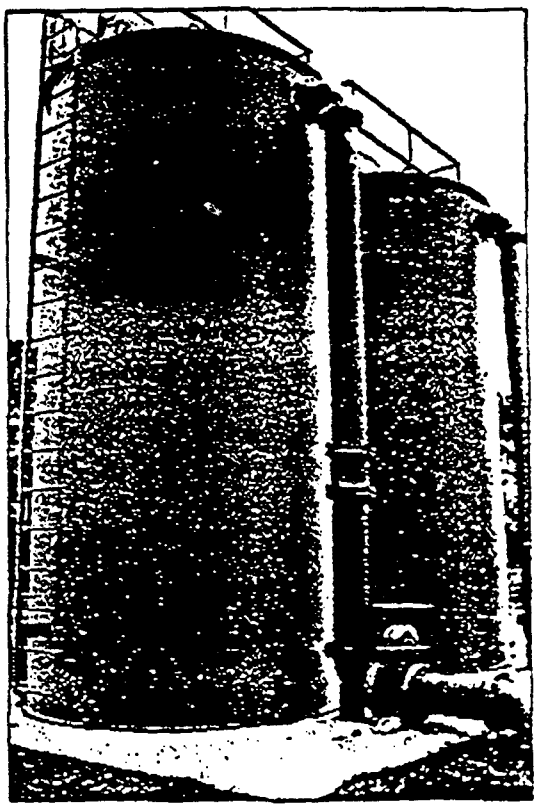

Data - Cylindrical Units

Model	DSF-7	DSF-12	DSF-19	DSF-38	DSF-64
Filtration Area (ft.²)	7	12	19	38	64
Inside Diameter	3'0"	4'0"	5'0"	7'0"	9'0"
Height	8'9"	12'0"	12'9"	14'0"*	18'6"*
Feed Rates (gpm)**	14-42	24-72	38-114	76-228	128-384
Sand Required (Tons)	1.6	3.3	5	9.5	20
Air Consumption (SCFM @ 15-25 psig)	0.5-1.0	0.5-1.5	1-2	2-3	3-4
Pressure Drop (Inches)	15-20	18-24	18-24	18-24	18-24

*Standard Platform and Ladder adds 3'6". Deep-bed design adds 3'4".
**Dependent on application.

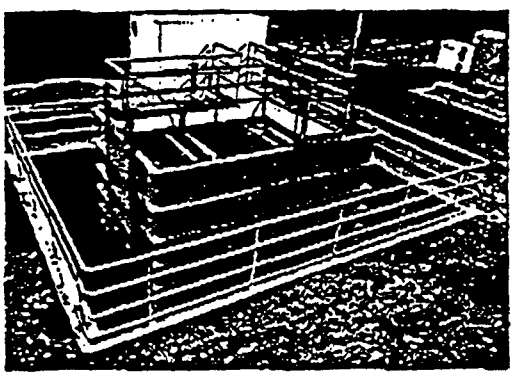

Data - Rectangular Units

Model	DSF-50	DSF-100	DSF-150	DSF-200
Filtration Area (ft.²)	50	100	150	200
Inside Dimensions	5' x 10'	10' x 10'	10' x 15'	10' x 20'
Height	12'0"*	12'0"*	12'0"*	12'0"*
Feed Rates (gpm)**	100-300	200-600	300-900	400-1200
Sand Required (Tons)	9	18	27	36
Air Consumption (SCFM @ 15-25 psig)	3-5	7-9	10-12	12-15
Pressure Drop (Inches)	15-20	15-20	15-20	15-20

*Standard Platform and Ladder adds 3'6".
**Dependent on application.

Applications: Typical Data

Application	Loading Rate (gpm/ft.^{2})	Influent Solids (ppm)	Filtrate Solids (ppm)
Metal Finishing	4-6	20-100	2-5
Tertiary Filtration	3-5	20-150	5-10
Surface Water (Continuous Contact Filtration)	4-6	10-100 NTU	0.1-0.5 NTU
Steel Mill Scale	8-12	50-300	5-10
Phosphorous Removal	3-5	1-10 ppm P	<0.3 ppm P
Algae Removal	2-4	20-100	10-20
Oil Removal	2-6	20-200 Free oil	5-10 Free oil

Other Proven Applications

- Brine Filtration
- Cooling Tower Blowdown
- Chemical Processing
- Product Recovery

Combination Lamella® Gravity Settler/Thickener and DynaSand® Filter

The DynaSand Filter can easily be used as a polishing filter following the Parkson Lamella Gravity Settler/Thickener (LGS/T). The feed is pumped to the LGS/T. The clarified overflow from the LGS/T is gravity fed to the DynaSand Filter. The filtered water can then flow by gravity to discharge or reuse. The continuous reject also flows by gravity back to the LGS/T feed holding sump. Thus, the entire flash mixing, flocculation, clarification, and filtration process can be accomplished on an uninterrupted, no operator attention basis using only one feed pump.

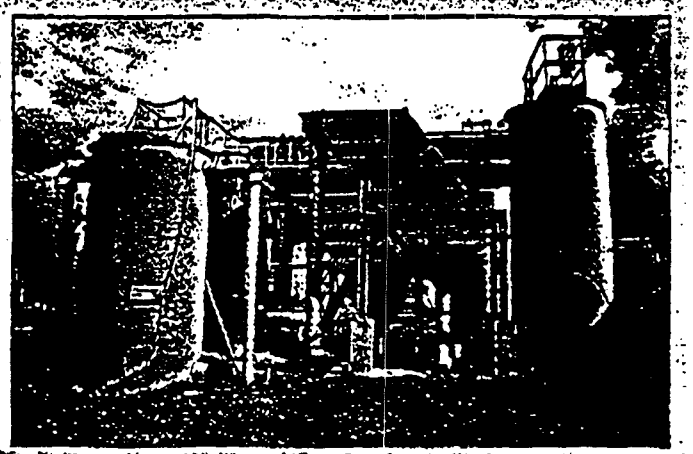

Continuous Contact Filtration

Water and wastewater treatment in conventional plants involves flocculation, clarification and filtration. Direct filtration eliminates clarification but still requires flocculation. CONTINUOUS CONTACT FILTRATION performs coagulation, flocculation and separation directly within the sand bed and eliminates the external flocculators and clarifiers. The resultant savings can be up to 85% compared to conventional treatment and 50% compared to direct filtration. And, since only small flocs are required for filtration as opposed to clarification, chemical dosage is reduced by 20-30% in most cases compared to conventional treatment.

Conventional

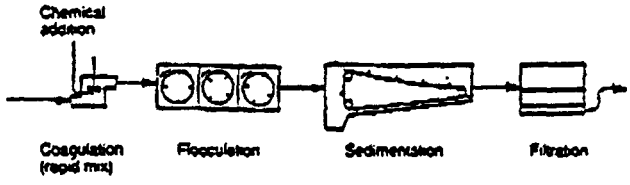

Direct Filtration

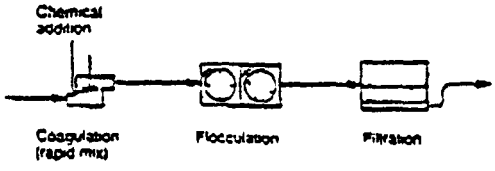

Continuous Contact Filtration

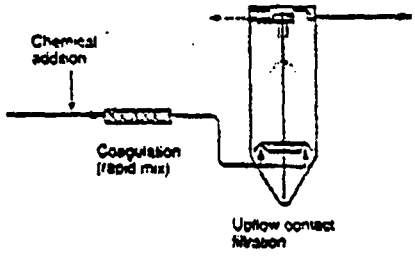

For potable water applications, the top feed DynaSand Filter design is utilized.

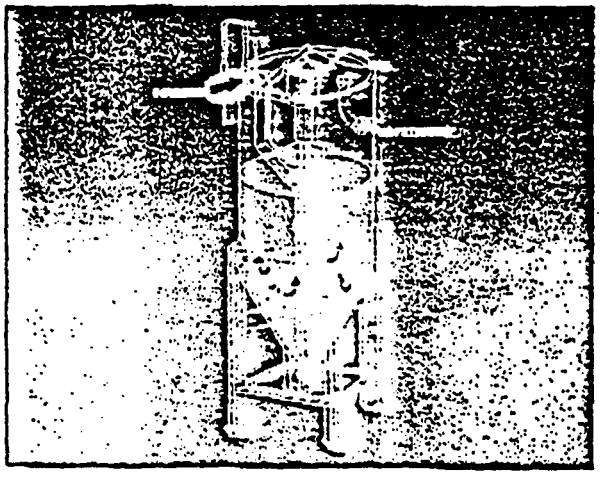

Applications

- Potable Water - surface and well water filtration
- Process Water
- Phosphorous Removal
- Algae Filtration
- Brine Filtration

TABLE 12.10
Filtration performance

Filter type	Wastewater	Filter depth, ft	Hydraulic loading, gal/(min · ft²)	Percent removal		Effluent, mg/l	
				SS	BOD	SS	BOD
Gravity downflow	TF effluent	2–3	3	67	58	—	2.5
Pressure upflow	AS effluent	5	2.2	50	62	7.0	6.4
Dual media	AS effluent	2.5	5.0	74	88	4.6	2.5
Gravity downflow	AS effluent	1.0	5.3	62	78	5	4
Dynasand	Metal finishing	3.3	4–6	90	—	2–5	—
	AS effluent	3.3	3–10	75–90	—	5–10	—
	Oily wastewater	3.3	2–6	80–90†	—	5–10†	—
Hydroclear	Poultry	1	2–5	88	—	19	—
	Oil refinery	1	2–5	68	—	11	—
	Unbleached kraft	1	2–5	74	—	17	—

† Free oil.
Note:
ft = 0.305 m
gal/(min · ft²) = 4.07 × 10⁻² m³/(min · m²)

The Dynasand (DSF) continuous backwash filter is a continuous self-cleaning upflow deep-bed granular media filter. The filter media is cleaned continuously by recycling the sand internally through an airlift pipe and sand washer, as shown in Fig. 12-17. The regenerated sand is redistributed on top of the bed, allowing for a continuous uninterrupted flow of filtered water and reject water. Filtration performance is shown in Table 12.10.

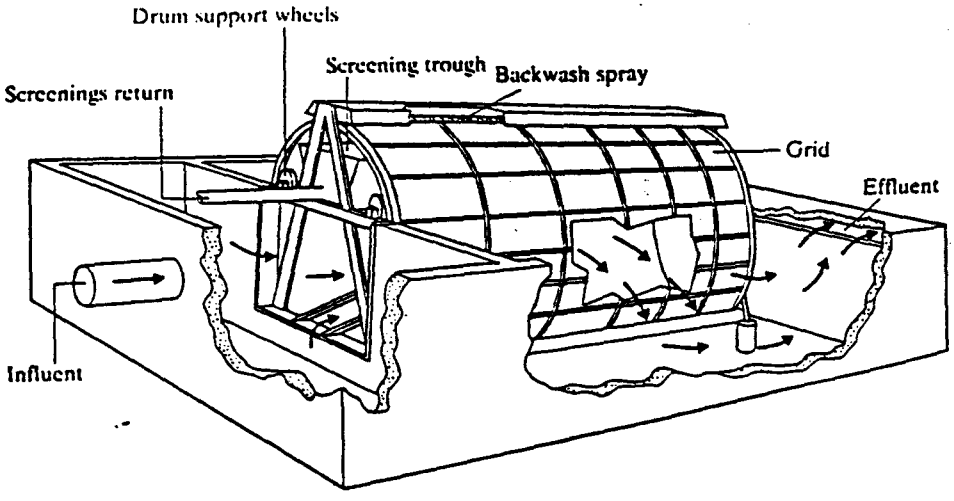

FIGURE 12-18
Microscreen (*Courtesy of Envirex, Inc.*)

491

TABLE 12.11
Removal efficiencies

Aperture screen, μm	F g (
35	
23	

Note: gal/(min · ft²) = 4.07 ×

Microscreen

A microscreen is a r
less steel fabric (Fig
filtered through the
fabric. As the drum
at the top of the d
spray nozzles that e
18 inches (30 to 46
throughput water.
with hydraulic load
cleaning of the drur

For filtration
(ft² · d) [4.3 kg/(m²
(min · m²)] has bee
and BOD of 6 to
sludge effluent on
For design purpos
given in Table 12.1

The efficienc
decrease in the th
with an increase in

REFERENCES

1. Eckenfelder, W. W
Waste Disposal N
1958.
2. Crites, R. W.: *Pro*
3. "Diagnosis and
Handbook 60, 19
4. Jewell, W. J.: *Li*
Cornell Universit
5. Adamczyka, A. F
Science, Ann Arb

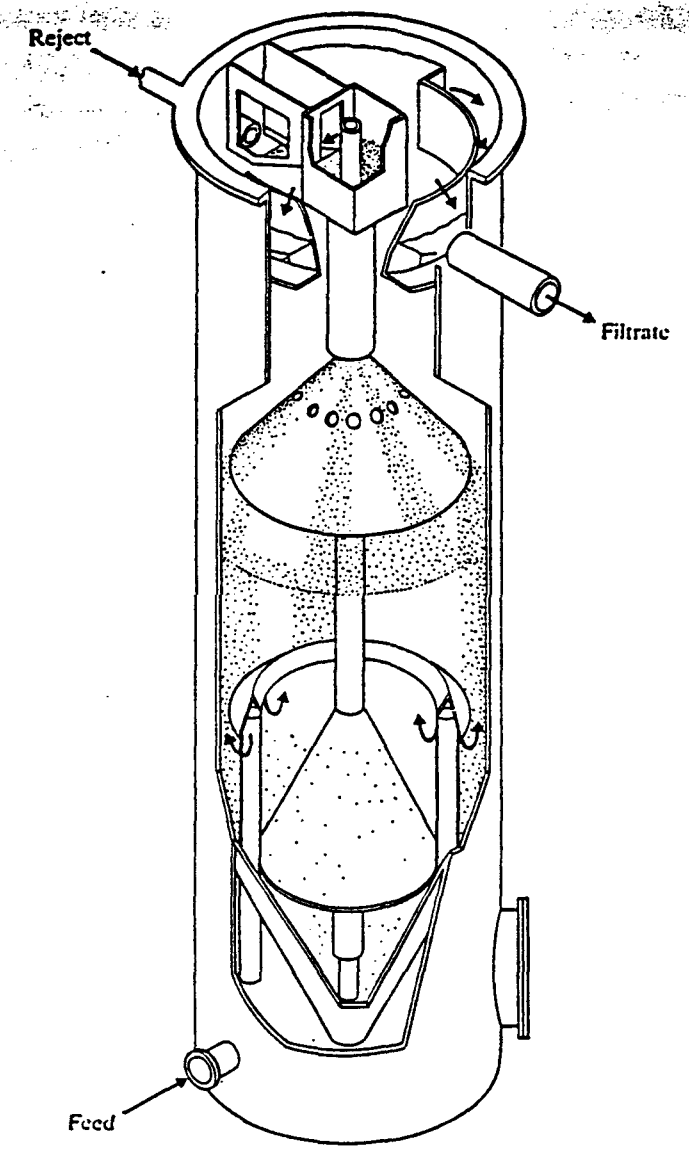

FIGURE 12-17
Dynasand filter (DSF). (*Courtesy of Parkson Corporation.*)

Filtration rate	2–5 gal/(min · ft²) [0.081–0.204 m³/(min · m²)]
Media size	0.35–0.45 mm sand
Bed depth	10–12 in (25.4–30.4 cm)
Backwash rate	12 gal/(min · ft²)[0.5 m³/(min · m²)]
Air mix	0.25 standard ft³/(min · ft²) [0.076 std m³/(min · m²)]
Terminal head loss	3.5 ft (1.07 m)
Backwash filtrate ratio	0.10

Description: **F-101 A,B Polishing Filter**

Size: 28 inch diameter

Operating Parameters:

Rated Flow Rate	350 gpm
Materials of Construction	304 Stainless Steel
Pressure Rating	150 psi
Filter Retention	2.5 micron
Clean Pressure Drop	2 psi
Dirty Pressure Drop	150 psi max.
	50 psi max. operating
Appurtenances	~~Steid~~ Skid Mounted

– BASED ON VONTASANO FILTER INFORMATION WILL DETERMINE NEED FOR POLISHING FILTERS

The ERM Group

UV/oxidation equipment. Precipitation of iron on the quartz tubes will reduce the effectiveness of these units and increase maintenance.

The results of the flocculation tests conducted during the second phase of the treatability study indicated that alum was not as effective at removing total suspended solids as during the first phase testing. Although the second phase total suspended solids concentrations were higher than during the first phase testing, the remaining PCB concentrations were similar to results obtained during the first phase. However, alum used during the Phase 2 testing was still more effective than lime at suspended solids removal.

Filtration test results indicate that the 2.5 micron filter is effective at further removing PCBs and suspended solids from the wastewater, but that a prefilter will be required upstream of the polishing filter. During the removal of solids from the wastewater, the 2.5 micron filter clogged after passing approximately 1,300 mls. For this reason it is recommended that a sand filter be used prior to the polishing filter to reduce the loading on the polishing filters. The sand filter would also be capable of controlling suspended solid surges that might result from operational upsets in Cell No. 3.

The carbon adsorption isotherm prepared from the treatability study data indicates that carbon adsorption is not efficient at removing PCBs from this wastewater. As indicated in Figure 4-2, the isotherm has points that correspond well with EPA generated isotherms for small PCB concentration reductions, but the carbon performance deviates greatly from the EPA performance as PCB concentrations approach detection limits. Therefore, the amount of carbon required to reduce PCB concentrations to detection limits will be very large. The suspected reason for the inefficiency of the carbon at removing low level PCBs is, although the total suspended solids concentrations in the wastewater were very low, the PCBs adhering to the colloidal material are not adsorbed onto the carbon. This conclusion was supported by analyzing duplicate PCB samples from the carbon isotherm tests and having one set of samples shaken and decanted prior to analysis. The other set of samples were not shaken prior to analysis. The difference

Description: **UV-100 UV/Hydrogen Peroxide Unit**

Size: -

Capacity: -

Operating Parameters:

Flow Rate	350 gpm
Detention Time	3 minutes
Energy Requirements	400 KVA
Appurtenances	Skid Mounted

- INFORMATION WILL BE UPDATED BASED ON IMPROVEMENTS IN TECHNOLOGY/SYSTEM SINCE 1991.

54
APR 1 1991

March 28, 1991

Mr. Bill Breed
ERM - New England
205 Portland Avenue
Boston, Massachusetts 02114

Re: Bench-Scale Treatability Study
New Bedford Superfund Site
Project #TMM-9102-5381

Dear Mr. Breed:

Peroxidation Systems, Inc. (PSI) was contracted by ERM - New England (ERM) to perform a treatability study on contaminated surface water using the perox-pure™ Process. The surface water reportedly contained 320 μg/l of PCBs. The specified treatment objective was the destruction of PCBs to 1 μg/l.

A bench-scale perox-pure™ treatability study was performed on the surface water in early February of 1991. The study was performed at the PSI Testing Laboratory in Tucson, Arizona. The purpose of the study was to provide a range of data from which full-scale treatment criteria could be determined. A copy of the bench-scale testing report is enclosed.

The surface water received by PSI was turbid orange with high iron and suspended solids concentrations. Since the iron and solids concentrations were at levels which would hinder the perox-pure™ reaction and foul the quartz tubes in the perox-pure™ equipment, pretreatment was effected via gravity filtration. After filtration, the suspended solids concentration was negligible and the iron concentration in the surface water was less than 1 mg/l.

A series of bench-scale tests were conducted on the contaminated surface water at a variety of oxidation times, H_2O_2 dosages and pH values. Determination of the best treatment conditions was not possible because the PCBs were destroyed to below the 5 μg/l analytical detection limit in every treated sample. However, PCB oxidation was rapid with destruction to below the detection limit occurring within 0.5 minutes in some cases.

Based upon the bench-scale results, and previous treatability studies conducted by PSI on PCB laden waters, a full-scale contact time of 1.4 minutes is projected to meet the specified treatment criteria. A perox-pure™ Model CWB 360 will provide the necessary contact time at the anticipated full-scale surface water flow rate of 350 gpm. A specification sheet for the CWB 360 is enclosed for your information.

I understand that ERM plans to rent the perox-pure™ treatment equipment for a period of four months in the spring of 1992. While PSI will make every effort to meet this schedule, it is not possible to reserve a CWB 360 for such a short period of time. The perox-pure™ equipment is therefore subject to availability.

Peroxidation Systems Inc.
5151 E. Broadway, Suite 600 Tucson, Arizona 85711 602-790-8383 FAX 602-790-8008

The rental fee for the perox-pure™ Model CWB 360 including the hydrogen peroxide (H_2O_2) feed module and complete service/maintenance of the equipment by PSI is $15,000 per month. The usage of PSI H_2O_2 solution would also be billed each month. A fee of $15,000 would apply for equipment mobilization, and an additional $15,000 when the equipment is removed.

In comparison to the rental fees, purchase of the CWB 360 would involve a capital investment of approximately $350,000 as well as additional fees for repair/maintenance parts and labor. The mobilization and demobilization fees would also apply.

For an PCB effluent concentration of 0.6 μg/l, a CWB-405/360 would be required. The capital cost for this unit is approximately $15,000 more than the CWB-360 quoted above.

Bill, thank you for the opportunity to demonstrate the capabilities of the perox-pure™ Process in treating the contaminated s urface water at the New Bedford Site. If you need any additional information, or if you have any questions concerning the treatability study or the perox-pure™ equipment, please feel free to call Mike Donaway at (201)276-0044 or myself.

Sincerely,

Kathy J. Kent
Applications Engineer

KJK:cw
Enclosure

cc: Fred Bernardin, PSI
Mike Donaway, PSI
Geoff Swett, PSI
PSI File

561

CONFIDENTIAL TESTING REPORT

DESTRUCTION OF ORGANIC CONTAMINANTS IN SURFACE WATER WITH THE perox-pure™ PROCESS

for

ERM-New England
Boston, Massachusetts
Purchase Order No. 20801-04

by

Peroxidation Systems, Inc.
5151 E. Broadway, Suite 600
Tucson, Arizona 85711

February 27, 1991

The information contained in this report includes descriptions and procedures which are confidential to Peroxidation Systems, Inc. The report shall not be copied nor released to third parties without prior approval from Peroxidation Systems, Inc.

TABLE OF CONTENTS

		Page
1.0	INTRODUCTION	1
2.0	TESTING PROCEDURES	2
	2.1 Description of Surface Water	2
	2.2 Testing Protocol	2
3.0	TESTING RESULTS	3
4.0	FULL-SCALE TREATMENT CONDITIONS	5
	4.1 Treatment Criteria	5
	4.2 Recommended Process Conditions	5
5.0	SUMMARY	6

1.0 INTRODUCTION

The perox-pure™ Process destroys dissolved organic contaminants in water by means of chemical oxidation. Ultraviolet (UV) light catalyzes the chemical oxidation of organic contaminants in water by its combined effect upon the organic contaminants and its reaction with hydrogen peroxide (H_2O_2). Many organic contaminants absorb UV light and may undergo a change in their chemical structure or may become more reactive with chemical oxidants. More importantly, UV light at less than 400 nm wavelength reacts with H_2O_2 molecules to form hydroxyl radicals. These powerful chemical oxidants then react with the organic contaminants in the water. If carried to completion the reaction products of hydrocarbon oxidation with the perox-pure™ Process are carbon dioxide and water.

Peroxidation Systems, Inc. (PSI) was contracted by ERM-New England (ERM) to perform a treatability study on contaminated surface water from the New Bedford Superfund Site using the perox-pure™ Process. The surface water reportedly contained 320 µg/l of PCBs and 4 µg/l of naphthalene. The treatment objective specified by ERM was the destruction of PCBs to 1 µg/l.

A bench-scale perox-pure™ treatability study was performed on the surface water during February 1991 at the PSI Testing Laboratory in Tucson, Arizona. These tests were designed to provide a range of data from which full-scale treatment criteria and costs would be projected.

GOLDEN STATE
Analytical Services, Inc.
15735-1 Strathern St. • Van Nuys • CA 91406
Tel: (818) 376-1122 • Fax: (818) 781-8128

Client:	Peroxidation Systems, Inc.	Matrix:	Liquid
Project Name:	ERM N.E.	Date Received:	01/30/91
Project#:	N/A	Date Analyzed:	01/30-31/91
P.O.#:	N/A	GSAS Job#:	6221

PCBs (608)
ug/L (ppb)

Client Sample#: / GSAS Sample#:	ENE RAW GS-0191-841	ENE 1-0 GS-0191-842	ENE 1-1 GS-0191-843	Reporting Limits
PCB - 1016	BRL	BRL	BRL	5.0
PCB - 1221	BRL	BRL	BRL	5.0
PCB - 1232	80	57	BRL	5.0
PCB - 1242	BRL	BRL	BRL	5.0
PCB - 1248	BRL	BRL	BRL	5.0
PCB - 1254	BRL	BRL	BRL	5.0
PCB - 1260	BRL	BRL	BRL	5.0

BRL: Below Reporting Limit

Approved By: Dr. B. Gene Bennett

GOLDEN STATE
Analytical Services, Inc.
15735-1 Strathern St. • Van Nuys • CA 91406
Tel: (818) 376-1122 • Fax: (818) 781-8128

Client:	Peroxidation Systems, Inc.	Matrix:	Water
Project Name:	ERM N.E.	Date Received:	02/04/91
Project#:	N/A	Date Analyzed:	02/06/91
P.O.#:	N/A	GSAS Job#:	6234

PCBs (608)
ug/L (ppb)

Client Sample#: GSAS Sample#:	ENE 3-2 GS-0291-007	ENE 4-0 GS-0291-008	ENE 4-1 GS-0291-009	Reporting Limits
PCB - 1016	BRL	BRL	BRL	5.0
PCB - 1221	BRL	BRL	BRL	5.0
PCB - 1232	BRL	BRL	BRL	5.0
PCB - 1242	BRL	BRL	BRL	5.0
PCB - 1248	BRL	BRL	BRL	5.0
PCB - 1254	BRL	BRL	BRL	5.0
PCB - 1260	BRL	BRL	BRL	5.0

BRL: Below Reporting Limit

Approved By: Dr. B. Gene Bennett

B. Gene Bennett

61

GOLDEN STATE
Analytical Services, Inc.
15735-1 Strathern St. • Van Nuys • CA 91406
Tel: (818) 376-1122 • Fax: (818) 781-8128

Client:	Peroxidation Systems, Inc.	Matrix:	Water
Project Name:	ERM N.E.	Date Received:	02/04/91
Project#:	N/A	Date Analyzed:	02/06/91
P.O.#:	N/A	GSAS Job#:	6234

PCBs (608)
ug/L (ppb)

Client Sample#:	ENE 4-2	Reporting
GSAS Sample#:	GS-0291-010	Limits
PCB - 1016	BRL	5.0
PCB - 1221	BRL	5.0
PCB - 1232	BRL	5.0
PCB - 1242	BRL	5.0
PCB - 1248	BRL	5.0
PCB - 1254	BRL	5.0
PCB - 1260	BRL	5.0

BRL: Below Reporting Limit

Approved By: Dr. B. Gene Bennett

Dr. B. Gene Bennett

MODULAR TREATMENT SYSTEMS

MODEL CW-360

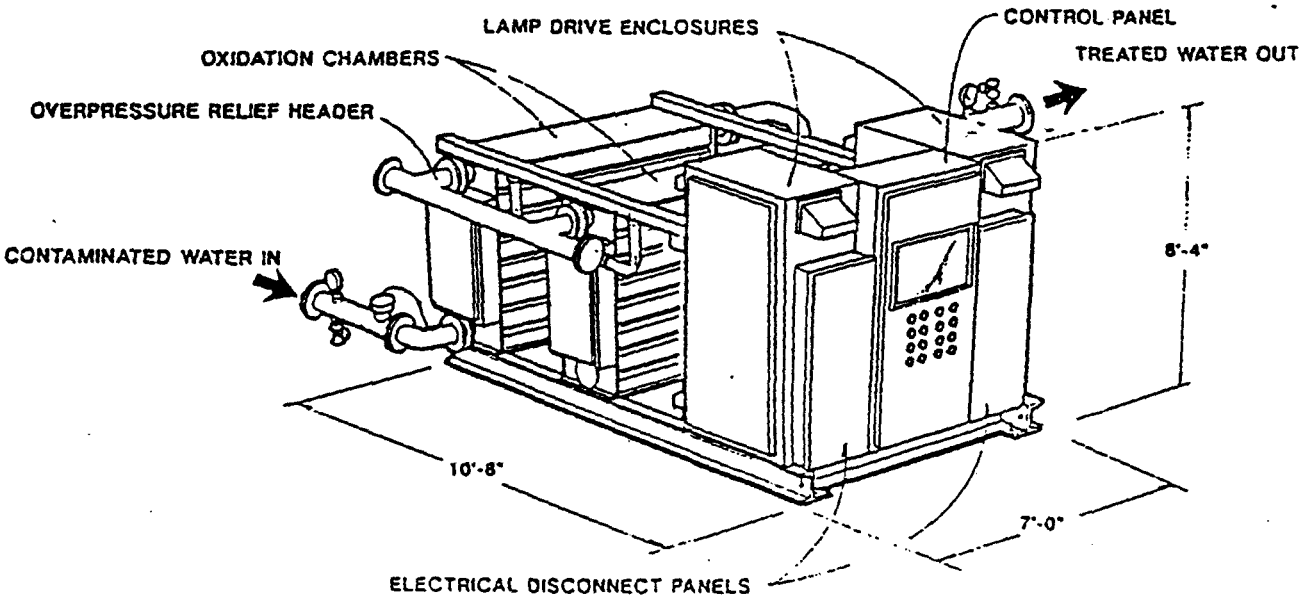

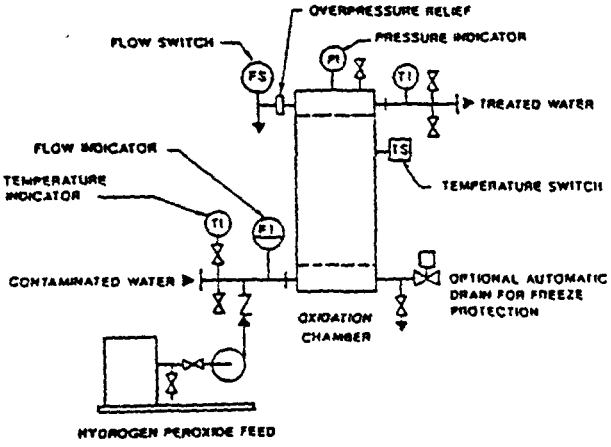

SPECIFICATIONS	Model CW-360	
Flow Rate: Maximum	250 gpm	1000 gpm
Connections:	150# Flange	150# Flange
Inlet:	3"	6"
Outlet:	4"	6"
Power Supply:	3 pH/60Hz/480V, 360KW, 480 Amps	
Electrical Encl.:	NEMA 3R	
Material - Wetted Parts:	316 SS, Quartz, Fluoroelastomers, TFE	
External Parts:	Enameled Steel	
Weight - Shipping:	12500 lbs.	
Operating:	17900 lbs.	

The perox-pure™ chemical oxidation system consists of modular equipment designed to treat water contaminated by dissolved organic materials. Bench-scale process evaluations will determine the oxidation time necessary for the treatment level desired and whether pretreatment of the water is necessary. Full-scale oxidation chamber size and the number of lamps are then selected.

The oxidation chamber is stainless steel. Lamps are horizontally mounted in quartz sleeves with fluoroelastomer seals. Indicators are provided to monitor performance of each lamp. Safety features include shop-wired and tested control panels interlocked with temperature and flow switches to shut off power at preset conditions.

The perox-pure™ system and its components are covered by numerous issued and pending patents.

Peroxidation Systems Inc.
5151 E. Broadway, Suite 600 Tucson, Arizona 85711 602-790-0303 FAX 602-790-0001

2.0 TESTING PROCEDURES

2.1 Description of Surface Water

On January 29, 1991, approximately 12 gallons of surface water was received from ERM at the PSI Laboratory in Tucson, Arizona. The surface water was contained in 4-liter amber glass bottles with no headspace.

Characterization of the surface water sample was performed by PSI to determine parameters of importance for **perox-pure™** treatment. The surface water as received contained iron and suspended solids which were removed via gravity filtration prior to performing bench-scale testing. The characterization results for the raw and filtered surface water are shown below. An analysis of the raw surface water revealed the presence of 80 µg/l of total PCBs. Naphthalene was not detected.

	Raw	Filtered
Visual Color:	Orange/ Cloudy	Clear/ Colorless
pH:	6.5	6.5
Iron (mg/l):	12.5	2.5-1.8*
Chloride (mg/l):	14,250	14,250
Total Organic Carbon (mg/l):	7	7
Total Dissolved Solids (mg/l):	12,100	13,100
Est. Suspended Solids (mg/l):	<20	<0.2
Alkalinity (mg/l):	150	110
Turbidity (FTU):	85	<5

* Several iron removal methods were investigated as part of the bench-scale testing variables.

2.2 Testing Protocol

The bench-scale **perox-pure™** test unit was charged by placing an aliquot of the water into a recycle reservoir. A pump was started which circulated the solution through the UV oxidation chamber and back into the reservoir providing continual mixing in the closed system. Sulfuric acid was added to the surface water at this time to adjust the pH for certain tests.

The UV lamp was illuminated to start a test, and H_2O_2 was added as required to maintain a constant concentration in solution. The solution temperature was controlled through use of an in-line cooling coil. All materials in contact with the solution were glass, quartz, stainless steel, viton or teflon.

After the appropriate oxidation times, samples of the treated water were collected in 1-liter amber glass bottles. An untreated sample was also collected in the same way. These samples were shipped to Golden State Analytical in Van Nuys, California for PCB analyses.

3.0 TESTING RESULTS

Four perox-pure™ treatment tests were performed on the contaminated surface water. These tests were designed to determine the effects of pH adjustment, H_2O_2 dosage, and iron removal efficiency on the rate of PCB destruction. The test conditions are shown in Table 1.

Table 1

Bench-Scale perox-pure™ Treatment Conditions for the Contaminated Surface Water

Test	H2O2 in Solution (mg/l)	Initial pH	Iron Removal* (Method; mg/l)
1	50	4.5	I ; 0.18
2	50	4.9	II ; 2.5
3	50	6.8	I ; 0.25
4	25	5.3	I ; 0.18

* Method I - Addition of 50 mg/l of H_2O_2, followed by filtration through 5 μ media.
Method 2 - Filtration through 5 μ media.
mg/l = Iron concentration after filtration.

The analytical results for the four tests are shown in Table 2. The analytical reports are provided in Appendix A. The results for Test 1 demonstrate rapid destruction of the PCBs to below the 5 μg/l analytical detection limit. Although the PCB concentration was below the detection limit in every treated sample from Tests 2, 3, and 4, the influent PCB concentration for these tests was either unknown or below the detection limit as well. Thus, it is not possible to evaluate the effects of the test variables.

One possible explanation for the variation in PCB concentration in the influent surface water samples is the affinity of PCBs for adsorption onto solids. Test 1 was performed on the same day the surface water samples arrived at the PSI lab. Tests 2, 3, and 4 were conducted three days later after the analytical results from Test 1 had been evaluated. During the time between the treatment tests, it is possible that the PCBs adhered to the surface of the suspended solids in the surface water and were subsequently removed during filtration.

Because of the minimum amount of treatability information received from this study, the projection of full-scale perox-pure™ treatment conditions is difficult for the contaminated surface water. Therefore, PCB destruction rate data from previous perox-pure™ treatability studies conducted by PSI on similar water samples will be used in addition to the rate data from Test 1.

Table 2

Bench-Scale perox-pure™ Treatment Results for the Contaminated Surface Water

Test	Full-Scale Oxidation Time (min)	PCBs (µg/l)
1	0	57
	1.5	<5
	3.0	<5
	6.0	<5
2	0	NA*
	0.5	<5
	1.0	<5
3	0	NA
	0.5	<5
	1.0	<5
4	0	<5
	0.5	<5
	1.0	<5

* Not analyzed.

66/

GOLDEN STATE
Analytical Services, Inc.
15735-1 Strathern St. • Van Nuys • CA 91406
Tel: (818) 376-1122 • Fax: (818) 781-8128

Client:	Peroxidation Systems, Inc.	Matrix:	Water
Project Name:	ERM N.E.	Date Received:	02/04/91
Project#:	N/A	Date Analyzed:	02/06/91
P.O.#:	N/A	GSAS Job#:	6234

PCBs (608)
ug/L (ppb)

Client Sample#:	ENE 2-1	ENE 2-2	ENE 3-1	Reporting
GSAS Sample#:	GS-0291-004	GS-0291-005	GS-0291-006	Limits
PCB - 1016	BRL	BRL	BRL	5.0
PCB - 1221	BRL	BRL	BRL	5.0
PCB - 1232	BRL	BRL	BRL	5.0
PCB - 1242	BRL	BRL	BRL	5.0
PCB - 1248	BRL	BRL	BRL	5.0
PCB - 1254	BRL	BRL	BRL	5.0
PCB - 1260	BRL	BRL	BRL	5.0

BRL: Below Reporting Limit

Approved By: Dr. B. Gene Bennett

Dr. B. Gene Bennett

GOLDEN STATE
Analytical Services, Inc.
15735-1 Strathern St. • Van Nuys • CA 91406
Tel: (818) 376-1122 • Fax: (818) 781-8128

Client:	Peroxidation Systems, Inc.	Matrix:	Liquid
Project Name:	ERM N.E.	Date Received:	01/30/91
Project#:	N/A	Date Analyzed:	01/30-31/91
P.O.#:	N/A	GSAS Job#:	6221

PCBs (608)
ug/L (ppb)

Client Sample#:	ENE 1-2	ENE 1-3	Reporting Limits
GSAS Sample#:	GS-0191-844	GS-0191-845	
PCB - 1016	BRL	BRL	5.0
PCB - 1221	BRL	BRL	5.0
PCB - 1232	BRL	BRL	5.0
PCB - 1242	BRL	BRL	5.0
PCB - 1248	BRL	BRL	5.0
PCB - 1254	BRL	BRL	5.0
PCB - 1260	BRL	BRL	5.0

BRL: Below Reporting Limit

Approved By: Dr. B. Gene Bennett

B. Gene Bennett

PUMPS

Description: **P-100A, P-100B Flocculation Feed Pumps**

Capacity: ~~350~~ GPM

Operating Parameters:

TDH	55 FT.
BHP	10 HP
Speed	1700 RPM

- ADDITIONAL PUMPS TO BE ADDED TO PUMP ADDITIONAL WASTEWATER VOLUME (~800 gpm).
- PUMP CALCULATIONS TO BE EVALUATED FOR NEW PROCESS CONFIGURATION TO ENSURE EXISTING PUMPS ARE ADEQUATE.

Description: **P-102A, P-102B Filter Feed Pumps**

Capacity: 368 ~~390~~ GPM

JDF 11/5/91

Operating Parameters:

TDH	~~40~~ FT. 60 FT
BHP	~~10~~ HP 15 HP
Speed	1750 RPM

~~- TO BE PROVIDED FOR ALL NEW UNIT PROCESS~~

JDF 8/27/91

Description: **P-103A, P-103B Polishing Filter Feed Pumps**

Capacity: ~~390~~ 350 GPM

JDF 8/27/91

- TO BE PROVIDED FOR ALL NEW TREATMENT SYSTEMS

Operating Parameters:

TDH	155 FT.
BHP	40 ~~20~~ HP
Speed	3700 RPM

JDF 8/27/91

~~- ADDITIONAL PUMPS TO BE ADDED TO MAKE UP FOR ADDITIONAL TREATMENT CAPACITY (~~[illegible]~~ GPM)~~

ERM-New England, Inc. 205 Portland Street • Boston, Massachusetts 02114 • (617) 742-8228

Project NEW BEDFORD HOT SPOTS REMEDIATION W.O. No. 208-01-03 Sheet 1 of 2
Subject DESIGN BASIS By JDF Date 5/1/91
PUMP CALCULATIONS Chkd. by FS Date 5/2/91

EQUALIZATION TANK (CELL NO. 2) TRANSFER PUMPS P-100A,B

TOP ELEVATION OF FLOCCULATION TANK = 25 FT (ASSUMED)
MINIMUM WATER ELEVATION IN EQUAL TANK = 5.5 FT + 1.0 FT = 6.5 FT ✓
FLOW RATE = 350 GPM
STATIC HEAD = 25 FT − 6.5 FT = 18.5 FT
LENGTH OF PIPING = 400 FT (ASSUME)

FITTINGS	NUMBER
PLUG VALVES	3
CHECK VALVE	1
ELBOWS 90°	10
STATIC MIXER	1
FLOW ELEMENT	1
CONTROL VALVE (BUTTERFLY)	1

→ TO BE REVISED BASED ON NEW PROCESS CONFIGURATION

ASSUME PIPE DIAMETER OF 6"

EQUIVALENT LENGTHS OF PIPE

FITTING	NUMBER	EQUIVALENT LENGTH	TOTAL
PLUG VALVE	3	165 LF	495
CHECK VALVE	1	45 LF	45
ELBOW 90°	10	35 LF	350

TOTAL EQUIVALENT LENGTH OF PIPE FOR FITTINGS = 890 LF

HEAD LOSS FOR OTHER FITTINGS

STATIC MIXER	1	5 FT
FLOW ELEMENT	1	5 FT
BUTTERFLY VALVE	1	10 FT

HEAD LOSS FOR SELECTED FITTINGS = 20 FT

HAZEN WILLIAMS EQUATION

$$h_f = \left[V / \left(1.318\, C R_H^{0.63} \right) \right]^{1.85}$$

$$V = \frac{350 \text{ GPM } (1 \text{ min}/60 \text{ sec})}{\frac{\pi (6/12)^2}{4} (7.48 \text{ GAL}/\text{FT}^3)} = 3.97 \text{ FT/SEC} \quad 4.902$$

$C = 120$ ASSUMED

$$R_H = D/4 = \frac{(6/12)}{4} = 0.13 \text{ FT} \quad .1208$$

$$h_f = \left[3.97 \text{ FT/SEC} / \left(1.318 (120)(0.13 \text{ FT})^{0.63} \right) \right]^{1.85}$$

$h_f = 0.01$ FT / LF

$h_f = 0.01$ FT / LF (400 LF + 890 LF) = 12.9 FT

ERM-New England, Inc. 205 Portland Street • Boston, Massachusetts 02114 • (617) 742-8228

Project NEW BEDFORD HOT SPOTS REMEDIATION W.O. No. 208-01-03 Sheet 2 of 2
Subject DESIGN BASIS By JDF Date 5/1/91
PUMP CALCULATIONS Chkd. by FS Date 5/2/91

TOTAL DYNAMIC HEAD = STATIC HEAD + FRICTION LOSSES

= 18.5 FT + 12.9 + 20 FT

= 51.4 FT SAY 55 FT

$$BHP = \frac{350 \times 55}{3960 \times 0.55} = 8.8 \text{ Hp} \quad \text{SAY } 10 \text{ Hp}$$

ASSUME PIPE DIAMETER OF 8"

EQUIVALENT LENGTHS OF PIPE

FITTING	NUMBER	EQUIVALENT LENGTH	TOTAL
PLUG VALVE	3	200 LF	600 LF
CHECK VALVE	1	52 LF	52 LF
ELBOW 90°	10	45 LF	450 LF

TOTAL EQUIVALENT LENGTH OF PIPE FOR FITTINGS = 1,102 LF

HEAD LOSS FOR OTHER FITTINGS

STATIC MIXER	1	5 FT
FLOW ELEMENT	1	5 FT
BUTTERFLY VALVE	1	10 FT
HEAD LOSS FOR SELECTED FITTINGS		20 FT

HAZEN WILLIAMS EQUATION

$$V = \frac{350 \text{ GPM } (1 \text{ MIN}/60 \text{ SEC})}{\frac{\pi (8/12)^2}{4} (7.48 \text{ GAL}/\text{FT}^3)} = 2.23 \text{ FT/SEC}$$

C = 120 ASSUMED

$$R_H = D/4 = \frac{8/12}{4} = 0.17 \text{ FT}$$

$$h_f = \left[2.23 \text{ FT/SEC} / (1.318 (120)(0.17 \text{ FT})^{0.63} \right]^{1.85}$$

$$= 0.003 \text{ FT/LF}$$

$$h_f = 0.003 \text{ FT/LF} (400 \text{ LF} + 1102 \text{ LF}) = 4.5 \text{ FT}$$

TOTAL DYNAMIC HEAD = STATIC + FRICTION LOSSES

= 18.5 FT + 4.5 FT + 20 FT

= 43 FT SAY 45 FT

$$BHP = \frac{350 \times 45}{3960 \times 0.55} = 7.2 \text{ Hp} \quad \text{SAY } 10 \text{ Hp}$$

THEREFORE USE 6" Φ TRANSFER PIPING

ERM-New England, Inc. 205 Portland Street • Boston, Massachusetts 02114 • (617) 742-8228

Project NEW BEDFORD HOT SPOT REMEDIATION W.O. No. 208-01-08 Sheet 1 of 3
Subject DESIGN BASIS By JDF Date 5/1/91
PUMP CALCULATIONS Chkd. by FS Date 5/2/91

SECONDARY SETTLING (CELL NO. 3) TO SAND FILTER P-102A,B

MINIMUM OPERATING ELEVATION IN CELL NO. 3 = 7 FT
MAXIMUM ELEVATION DISCHARGE TO SAND FILTER = ~~23~~ 43.2 FT (~~SAY 25 FT~~) (SAY 45)
FLOW RATE = ~~390~~ 368 GPM
STATIC HEAD = ~~25~~ 45 FT − 7 FT = ~~18~~ 38 FT
LENGTH OF PIPING = 400 FT (ASSUMED)

FITTINGS	NUMBER
PLUG VALVES	2
CHECK VALVE	1
ELBOWS 90°	5
FLOW ELEMENT	1
CONTROL VALVE (BUTTERFLY)	1

ASSUME PIPE DIAMETER OF 8"

EQUIVALENT LENGTHS OF PIPE

FITTING	NUMBER	EQUIVALENT LENGTH	TOTAL
PLUG VALVE	2	200 LF	400 LF
CHECK VALVE	1	52 LF	52 LF
ELBOW 90°	5	45 LF	225 LF

TOTAL EQUIVALENT LENGTH OF PIPE FOR FITTING = 677 LF
SAY 700 LF

HEAD LOSS FOR OTHER FITTINGS

FLOW ELEMENT	1	5 FT
CONTROL VALVE	1	10 FT

HEAD LOSS FOR SELECTED FITTINGS 15 FT

HAZEN WILLIAMS EQUATION

$$V = \frac{\cancel{390}\ 368\ GPM\,(1\ min/60\ sec)}{\frac{\pi(8/12)^2}{4}\,(7.48\ gal/ft^3)} = \cancel{2.49}\ 2.35\ FT/SEC$$

$C = 120$

$$R_H = \frac{D}{4} = \frac{(8/12)}{4} = 0.13\ FT$$

$$h_f = \left[\cancel{2.49}\ 2.35\ FT/SEC \,/\, (1.318\,(120)(0.13\ FT)^{0.63}\right]^{1.85}$$

$$= \cancel{0.005}\ 0.004\ FT/LF$$

$$= \cancel{0.005}\ 0.004\ FT/LF\ (700\ LF + 400\ LF) = \cancel{5.8}\ 4.9\ FT$$

TOTAL DYNAMIC HEAD = STATIC + FRICTION

$$= \cancel{18}\ 38\ FT + 15\ FT + \cancel{5.8}\ 4.9\ FT = \cancel{38.8\ FT}\ \cancel{58.5}\ \text{SAY } \cancel{40}\ 60\ FT$$

57.9

ERM-New England, Inc. 205 Portland Street • Boston, Massachusetts 02114 • (617) 742-8228

Project NEW BEDFORD HOT SPOT REMEDIATION W.O. No. 208-a-08 Sheet 2 of 3
Subject DESIGN BASIS By JDF Date 5/2/91
PUMP CALCULATIONS Chkd. by ES Date 5/2/91

$$BHP = \frac{\cancel{385}\ 368 \times \cancel{40}\ 60}{3960 \times 0.55} = \cancel{6.43}\ \cancel{10.7}\ 10.1\ Hp \quad \text{SAY } \cancel{10}\ 15\ Hp$$

(Discharge) P-103A,B

SAND FILTER TO ~~PRESSURE (POLISHING) FILTER~~

MA 7/25

WATER ELEVATION IN SAND FILTER = SAY ~~28~~ 43.2 FT
PRESSURE LOSS THROUGH SAND FILTER = SAY 3 FT
FLOW RATE = 350 GPM
PRESSURE DROP THROUGH POLISHING FILTER FROM SPECIFICATIONS — CLEAN = 0.5 PSI = 1.2 FT; DIRTY = 75 PSI = 173.3 FT
PRESSURE DROP THROUGH UV/OXIDATION UNIT (FROM SPEC) = 6 PSI = 13.9 FT
LENGTH OF PIPE = ASSUME 1000 FT

FITTINGS	NUMBER
PLUG VALVE	~~8~~ 0
CHECK VALVE	1
ELBOWS 90°	20
FLOW ELEMENT	1
CONTROL VALVE (BUTTERFLY)	1
Gate Valves	10

ASSUME PIPE DIAMETER OF 8"

EQUIVALENT LENGTHS OF PIPE

FITTING	NUMBER	EQUIVALENT LENGTH	TOTAL
PLUG VALVE	~~8~~ 0	200 LF	~~1600~~ 0 LF
CHECK VALVE	1	52 LF	52 LF
ELBOWS 90°	20	45 LF	900 LF
Gate Valves	10	~~25~~ 250	

TOTAL EQUIVALENT LENGTH OF PIPE FOR FITTING = ~~2,552~~ LF/202
SAY ~~2600~~ 1500 LF

MA 7/25

HEADLOSS FOR OTHER FITTINGS

FLOW ELEMENT	1	5 FT
CONTROL VALVE	1	10 FT

HEADLOSS FOR SELECTED FITTINGS 15 FT

HAZEN WILLIAMS EQUATION

$$V = \frac{350\ GPM\ (1\ MIN/60\ SEC)}{\frac{\pi (8/12)^2}{4}(7.48\ GAL/FT^3)} = 2.23\ FT/SEC$$

$C = 120$

$$R_H = \frac{D}{4} = \frac{(8/12)}{4} = 0.17\ FT$$

ERM-New England, Inc. 205 Portland Street • Boston, Massachusetts 02114 • (617) 742-8228

Project NEW BEDFORD HOT SPOTS REMEDIATION W.O. No. 208-01-09 Sheet 3 of 3
Subject DESIGN BASIS By JDF Date 5/2/91
PUMP CALCULATIONS Chkd. by FS Date 5/2/91

$$h_f = [\,2.23\ \text{FT/SEC} \,/\, (1.318)(120)(0.17\ \text{FT})^{0.63}\,]^{1.85}$$

$$= 0.003\ \text{FT/LF}$$

$$= 0.003\ \text{FT/LF}\ (1000\text{LF} + \cancel{2600}\ 1500\text{LF})$$

$$= \cancel{10.7}\ \text{FT}\ \ 7.5$$

MA 7/25

OPERATING RANGE

CLEAN PRESSURE (POLISHING) FILTER

TOTAL DYNAMIC HEAD = STATIC + FRICTION (POLISHING FILTER + UV UNIT + PIPE LOSSES)

$$= 0 + 1.2\ \text{FT} + 13.9\ \text{FT} + \cancel{10.7}\ 7.5\ \text{FT} + 15\ \text{FT}$$

$$= \cancel{40.8}\ 37.6\ \text{FT} \qquad \text{SAY } 41\ \text{FT}$$

DIRTY PRESSURE FILTER = MAXIMUM PRESSURE DROP = 50 PSI = 115.5 FT

$$\text{TDH} = 0 + 115.5\ \text{FT} + 13.9\ \text{FT} + 10.7\ \text{FT} + 15\ \text{FT}$$

$$= 155.1\ \text{FT} \qquad \text{SAY } 155\ \text{FT}$$

$$BHP_{(clean)} = \frac{390 \times 41}{3960 \times 0.55} = 7.3,\ \text{SAY } 10\ \text{HP}$$

$$BHP_{(Dirty)} = \frac{390 \times 155}{3960 \times 0.55} = 27.75,\ \text{SAY } 40\ \text{HP}$$

Description: **Piping**

Location:	Size (diameter in.)
Flocculation tank to secondary settling	6
Backwash filter to Polishing Filter	8

ERM-New England, Inc. 205 Portland Street • Boston, Massachusetts 02114 • (617) 742-8228

Project NEW BEDFORD HOT SPOTS REMEDIATION W.O. No. 208-01-08 Sheet 1 of 2
Subject DESIGN BASIS By JDF Date 5/1/91
PIPING CALCULATIONS Chkd. by FS Date 5/2/91

TRANSFER LINE FROM FLOCCULATION TANK TO SECUNDARY SETTLING (CELL NO.3)

TRANSFER LINE FLOWS BY GRAVITY
WATER LEVEL IN FLOCCULATION TANK = 25 FT (ASSUMED)
OPERATING LEVEL IN CELL NO.3 = 13 FT (MAXIMUM)
AVAILABLE STATIC HEAD = 25 FT - 13 FT = 12 FT

LENGTH OF PIPE = 400 FT (ASSUMED)

FITTINGS	NUMBER
PLUG VALVES	1
ELBOWS	5

ASSUME PIPE DIAMETER OF 6"

EQUIVALENT LENGTH OF PIPE

FITTING	NUMBER	EQUIVALENT LENGTH	TOTAL
PLUG VALVE	1	165 LF	165 LF
ELBOWS 90°	5	35 LF	175 LF

TOTAL EQUIVALENT LENGTH OF PIPE FOR FITTINGS = 340 LF

HAZEN WILLIAMS EQUATION

$$V = \frac{\cancel{390}\ 368 \text{ GPM } (1 \text{ min}/60 \text{ SEC})}{\frac{\pi (6/12)^2}{4} (7.48 \text{ GAL}/\text{FT}^3)} = \cancel{4.43}\ 4.2 \text{ FT/SEC}$$

9A 11/15/91

C = 120 ASSUMED

$$R_H = D/4 = \frac{6/12}{4} = 0.13 \text{ FT}$$

$$h_f = \left[\cancel{4.43}\ 4.2 \text{ FT/SEC} / (1.318(120)(0.13 \text{ FT})^{0.63}\right]^{1.85}$$

$$= \cancel{0.0145}\ 0.013 \text{ FT/LF}$$

$$= \cancel{0.014}\ 0.013 \text{ FT/LF} (400 \text{ LF} + 340 \text{ LF}) = \cancel{10.7}\ 9.6 \text{ FT}$$

STATIC HEAD - FRICTION LOSS = 2.4
12 FT - ~~10.7~~ 9.6 = ~~1.3~~ FT

THEREFORE WASTEWATER WILL FLOW BY GRAVITY FROM FLOCCULATION CHAMBER TO CELL NO. 3 (SECUNDARY SETTLING) FOR 6" ø PIPE

ERM-New England, Inc. 205 Portland Street • Boston, Massachusetts 02114 • (617) 742-8228

Project: NEW BEDFORD HOT SPOTS REMEDIATION — W.O. No. 208-01-08 — Sheet 2 of 7
Subject: DESIGN BASIS — By: JDF — Date: 5/1/91
PIPING CALCULATIONS — Chkd. by: ES — Date: 5/2/91

ASSUME PIPE DIAMETER OF 8"

EQUIVALENT LENGTH OF PIPE

FITTING	NUMBER	EQUIVALENT LENGTH	TOTAL
PLUG VALVE	1	200LF	200LF
ELBOWS 90°	5	45LF	225LF
TOTAL EQUIVALENT LENGTH OF PIPE FOR FITTINGS			425LF

HAZEN WILLIAMS EQUATION

$$V = \frac{\cancel{390}\ 368\ GPM\,(1\,MIN/60\,SEC)}{\frac{\pi(8/12)^2}{4}\,(7.48\ GAL/FT^3)} = \cancel{2.49}\ 2.35\ FT/SEC$$

5/1/91

$C = 120$

$R_H = D/4 = \frac{8/12}{4} = 0.17\ FT$

$h_f = [\cancel{2.47}\ 2.35\ FT/SEC\ /\ (1.318(120)(0.17\ FT)^{0.63}]^{1.85}$

$= \cancel{0.0036}\ 0.0033\ FT/LF$

$= \cancel{0.0036}\ 0.0033\ FT/LF\,(400\,LF + 425\,LF) = \cancel{3.0}\ 2.7\ FT$

STATIC HEAD − FRICTION LOSS = 9.3

$12\,FT - \cancel{3.0}\ 2.7\ FT = \cancel{9.0}\ FT$

THEREFORE WASTEWATER WILL FLOW WITH A LIMITED HEADLOSS FROM FLOCCULATION CHAMBER TO CELL NO. 3 (SECONDARY SETTLING) FOR 8" ϕ PIPE HOWEVER, BASED ON CALCULATIONS, A 6" ϕ PIPE WILL BE SUFFICIENT

ERM-New England, Inc. 205 Portland Street • Boston, Massachusetts 02114 • (617) 742-8228

Project New Bedford Hot Spots W.O. No. 208-01-09 Sheet 1 of 1
Subject Design Basis - Piping By DJM Date 6/20/91
Chkd. by JDF Date 9/27/91

Piping from Backwash Filter to Polishing Filter Feed Sump.

Basis
1. Transfer Line flows by Gravity
2. Water Level at Backwash Filter = 41
3. Invert Elevation of Exit Pipe = 29.25
4. Available Static head = 41 - 29.25 = 11.75
5. Length of Pipe = 55 ft
6. Fittings (1) Plug Valve

Assume Pipe Diameter of 8"

Equivalent Length of Pipe
(1) Plug Valve = 200 L.F.
(2) Elbows = 90 L.F
Total = 290 L.F

$V = 2.49$ ft/sec, $C = 120$

Hazen Williams Equation

$$R_H = D/4 = \frac{8/12}{4} = 0.17 \text{ ft.}$$

$$h_f = \left[2.49/1.318(120)(0.17)^{.63}\right]^{1.85} = 0.0036 \text{ ft/LF}$$

$$= 0.0036 \text{ ft/LF}(55 \text{ L.F} + 290 \text{ L.F}) = 1.242$$

STATIC Head - Friction Loss =

$$11.75 - 1.24 = 10.51 \text{ FT}$$

∴ 8"Ø Pipe sufficient

Project New Bedford Harbor - Hot Spot W.O. No. ~~ED0-59-02-21~~ Sheet 1 of 2
Subject Hydraulic Profile By SPS Date 3/28/91
Chkd. by SCS Date 5/15/91

CDF CELL 1 to 2

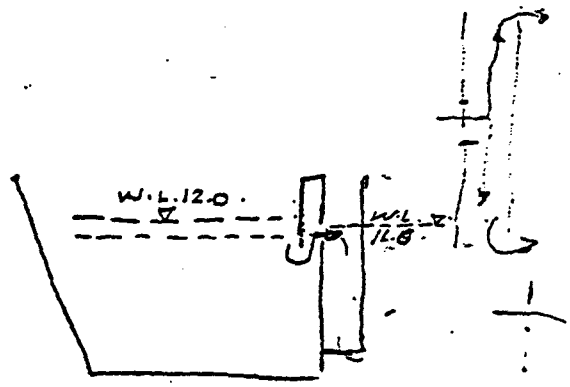

$Q = 2100$ GPM
$= 281$ cfm.
$= 4.7$ c.f.s.

$v = \frac{Q}{A} = \frac{4.7}{3 \times .58}$

$= 2.7$ ft/sec.

Head loss (contraction & expansion) $= 1.5 \frac{v^2}{2g} = \frac{1.5 \times 2.7^2}{64.4} = .17'$

Misc. losses $= .08'$
$.25'$

Allow 9" Freeboard $= .75'$ (7½" Fall head for 3' weir - 5¼" Fall head for 5' weir. Rectangular)

∴ Total Head loss $= .75' + .25' = 1.0'$.

∴ Water Elev. in Equalization tank $= 13.0 - 1.0 = 12.0'$.

Flocculator to CDF Cell 3

$Q = \cancel{375}$ 368 GPM

L = 100' - 8" ø PVC Pipe @ .5% slope from the Bldg. to Cell #3

Inv. El. 15.5 - (100 × .005) = 15.5 @ Bldg. say 16.25'

Hlinski 11/15/91

Material Balance

- MATERIAL BALANCES (SEDIMENT/WATER) WILL BE REVISED BASED ON FINAL DREDGE TECHNOLOGY (IES) SELECTED FOR OU #1.

WATER TREATMENT	1	2	3	4	5	6	7	8A	8B	8C	9	10	11	12	13
MASS BALANCE															
	DREDGING FLOW	EQUALIZATION INFLUENT	EQUALIZATION EFFLUENT	ALUM FEED	POLYMER FEED	FLOCCULATOR EFFLUENT	CLARIFIER EFFLUENT	PEROXIDE FEED	PEROXIDE FEED	POLYMER FEED	COMPRESSED AIR	FILTER EFFLUENT	MICRO FILTER EFFLUENT	UV/ OXIDATION EFFLUENT	FILTER REJECTS
DESIGN AVG. FLOW (GPM)	2,100	2,100	350	1.4*	21*	368	368	2*	2*	10	4**	350	350	350	18
TSS CONCENTRATION (PPM)	50,000	600	600			2,695	100					5	3	3	1,949
MASS FLOW-WATER (LB/DAY)	3,988,404	3,988,404	3,988,404	375	4,200	4,418,712	4,418,712	442	442	4,200		4,197,776	4,197,776	4,197,776	215,914
MASS FLOW-TSS (LB/DAY)	209,916	2,393	2,393	-	-	11,910	442	-	-	-	-	21	10	10	421
PCB (PPB)	3,857,000	49,000	49,000	-	-	51,294	2,800	-	-	-	-	533	320	<1.5	46,940
HEAVY METALS (µG/L)	141,000	4,874	4,874	-	-	4,880	114	-	-	-	-	114	114	114	114
IRON (PPM)	-	41	41	-	-	47	12	-	-	-	-	6	2	2	129
PAH (PPB)	23	3	3	-	-	3	1	-	-	-	-	1	1	<1	1
	4,198,320														
						(*) GPH									
						(**) SCFM									
SOLIDS TREATMENT	S1	S1A	S2	S2A	S3	S4	S4A	S4B	S5		S6	S7			
MASS BALANCE	SEDIMENT TRANSFER FLOW	STORAGE DRAIN	DEWATERING INFLUENT	FILTRATE RETURN	DEWATER EFFLUENT	INCINERATOR FEED	FLUE GAS	EXIT GAS	FLY ASH		BOTTOM ASH	ASH TO DISPOSAL			
TOTAL WASTE FLOW (LB/HR)	77,776	2,357	23,569	9,569	14,000	14,000	63,985	108,192	1,370		6,520	7,872			
WASTE FLOW-SOLIDS (LB/HR)	21,919	236	7,071	71	7,000	7,000	686	1	685		6,313	6,998			
WASTE FLOW-WATER (LB/HR)	55,859	2,121	16,498	9,498	7,000	7,000	51,544	57,650	685		189	874			
FUEL (LB/HR NATURAL GAS)	-	-	-	-	-	2,543	-	-	-		-	-			
COMBUSTION AIR	-	-	-	-	-	54,302	-	-	-		-	-			
QUENCH WATER	-	-	-	-	-	44,961	-	-	-		-	-			
PCB (PPM)	21,723	7,708	23,125	570	38,541	38,541	-	-	-		<5	<5			
HEAVY METALS (µG/L)	777,427	275,861	827,583	20,384	1,379,305	1,379,305	-	-	2,114,264		2,524,262	2,452,911			

96

ERM-New England, Inc. 205 Portland Street • Boston, Massachusetts 02114 • (617) 742-8228

Project: NEW BEDFORD HOT SPOTS W.O. No. 208-01-09 Sheet 1 of 8
Subject: PROCESS FLOW DIAGRAM ASSUMPTIONS By: B. BREED Date: 11/12/91
Chkd. by: JDF Date: 11/22/91

STREAM 1 DREDGING FLOW

- TYPICAL DREDGE FLOWS - 2100 GPM
- INFLUENT SOLIDS - 5%
- PCBs - PREDICTED VALUE BASED ON AVERAGE HOT SPOTS CONCENTRATION OF 23,142 PPM IN 30% SOLIDS DILUTED TO 5% SOLIDS IN THE DREDGING INFLUENT.
- METALS CONCENTRATION FROM TREATABILITY STUDY

  Cd = 3080 PPB
  Cr = 7340
  Cu = 68600
  Pb = 38100
  Ni = 6270
  Zn = 17600
  140,990 PPB

- PAH CONCENTRATION BASED ON TREATABILITY DATA.

STREAM 2 EQUALIZATION INFLUENT

- ALL CONTAMINANT & SOLIDS CONCENTRATIONS FROM TREATABILITY DATA

STREAM 3 EQUALIZATION EFFLUENT

WATER FLOW RATE =
2100 GPM × 60 MIN/HR × 4 HRS ÷ 24 HRS
= 350 GPM
ALL OTHER STREAM CONCENTRATIONS FROM TREATABILITY DATA

STREAM 4 ALUM FEED

ALUM DOSE BASED ON FEEDING STANDARD ALUM SOLUTION TO DOSE WASTEWATER (350 GPM) AT 25 PPM ($Al_2(SO_4)_3$)

ERM-New England, Inc. 205 Portland Street • Boston, Massachusetts 02114 • (617) 742-8228

Project NEW BEDFORD HOT SPOTS W.O. No. 208-01-01 Sheet 2 of 8
Subject PFD ASSUMPTIONS By B. BREED Date 11/26/91
Chkd. by JDF Date 11/22/91

STREAM 5 POLYMER FEED	FEED RATE POLYMER BASED ON HIGHEST CONCENTRATION OF POLYMER DOSED DURING TREATABILITY STUDY OF 100 PPM RATE INCLUDES WATER FOR SOLUTION
STREAM 6 FLOCCULATOR EFFLUENT	FLOW RATES REPRESENT STREAM 3 CONCENTRATIONS PLUS ADDED CONCENTRATIONS FROM STREAMS 3 + 4 + 5.
STREAM 7 CLARIFIER EFFLUENT	CONCENTRATIONS FROM TREATABILITY STUDY
STREAM 8A & 8B PEROXIDE FEEDS	FLOW RATE BASED ON TREATABILITY STUDY (PSI) DATA. FLOW RATE OF 50% H_2O_2 AT DOSE OF 50 PPM. PEROXIDE TO REMOVE IRON & FOR USE IN UV/OXIDATION PROCESS.
STREAM 8C POLYMER FEED	BASED ON CONCENTRATION OF POLYMER AS MAY BE REQUIRED TO ASSIST FILTRATION.
STREAM 9 COMPRESSED AIR	FLOW RATE OF AIR REQUIRED BY MANUFACTURER TO BACKWASH FILTER

97c/

ERM-New England, Inc. 205 Portland Street • Boston, Massachusetts 02114 • (617) 742-8228

Project NEW BEDFORD HOT SPOTS W.O. No. 203-01-09 Sheet 3 of 8
Subject PFD ASSUMPTIONS By B. BREED Date 11/26/91
Chkd. by JDF Date 11/22/91

STREAM 10 & 11 FILTER EFFLUENT AND MICROFILTER EFFLUENT	CONCENTRATIONS OF METALS AND PCB AS INDICATED BY TREATABILITY DATA. CONCENTRATION OF IRON AS INDICATED BY PEROXIDATION SYSTEM TREATABILITY WORK.
STREAM 12 UV/OXIDATION EFFLUENT	CONCENTRATIONS AS PREDICTED BY PEROXIDATION SYSTEMS TREATABILITY WORK.
STREAM 13 FILTER REJECTS	FLOW RATE FROM FILTER MANUFACTURER INFORMATION. SOLIDS & PCB CONCENTRATIONS BASED ON REMOVAL THROUGH FILTER = STREAM 7 − STREAM 10 ASSUME ALL METALS IN DISSOLVED PHASE. NO REMOVAL OF METALS IN FILTER

97D/

ERM-New England, Inc. 205 Portland Street • Boston, Massachusetts 02114 • (617) 742-8228

Project NEW BEDFORD HOT SPOTS W.O. No. 208-01-09 Sheet 4 of 8
Subject PFD ASSUMPTIONS By B.BREED Date 11/26/91
Chkd. by JDF Date 11/30/91

STREAM S1 SEDIMENT TRANSFER FLOW	FLOW RATE AS REQUIRED TO ALLOW AN INCINERATOR FEED OF 7 TONS/HR. FLOW OF SOLIDS BASED ON SOLIDS CONC. OF 28% w/w FLOW BASED ON 8 HR/DY OPERATION
STREAM S1A STORAGE DRAIN	FLOW OF DECANT OF 10% SOLIDS TO CDF CELL #2. FLOW REPRESENTS 10% OF TOTAL REQUIRED FLOW FOR STREAM S2. CONCENTRATION OF PCBs TIED TO SOLIDS CONC. FLOW BASED ON 24 HR/DY OPERATION
STREAM S2 DEWATERING INFLUENT	FLOW RATE BASED ON MASS BALANCE AROUND 30% SOLIDS STORAGE CONCENTRATION OF METALS & PCBs ALSO BASED ON MASS BALANCE AROUND 30% SOLIDS STORAGE. FLOWS BASED ON 24 HR/DY OPERATION.
STREAM S2A FILTRATE RETURN	WATER FLOW RATE REPRESENTS MASS OF WATER REQUIRING REMOVAL TO ENSURE A 50% SOLIDS CAKE FEED TO THE INCINERATOR. FLOW OF SOLIDS REPRESENTS 0.7% SOLIDS. (TYPICAL FILTRATE FROM FILTER PRESS DEWATERING). PCB CONCENTRATIONS
STREAM S3 DEWATERING EFFLUENT	DEWATERING EFFLUENT SOLIDS & WATER FLOWS BASED ON MASS BALANCE AROUND SOLIDS DEWATERING. (50% SOLIDS FEED). CONCENTRATIONS OF PCBs & METALS BASED ON MASS BALANCE AROUND DEWATERING
STREAM S4 INCINERATOR FEED	INCINERATOR FEED SOLIDS, WATER, PCB, AND METALS CONCENTRATIONS EQUAL TO INFLUENT TO 50% SOLIDS DEWATERING. FLOW OF FUEL, COMBUSTION AIR, AND QUENCH WATER ARE VALUES FROM COMPUTER MODEL

ERM-New England, Inc. 205 Portland Street • Boston, Massachusetts 02114 • (617) 742-8228

Project NEW BEDFORD HOT SPOTS W.O. No. 208-01-09 Sheet 5 of 8
Subject PFD ASSUMPTIONS By B. REED Date 11/26/91
Chkd. by JDF Date 11/30/91

STREAM S14 (CONT.)
INCINERATOR FEED

QUENCH WATER REPRESENTS THE TOTAL ANTICIPATED QUENCH WATER REQUIRED TO REMOVE ASH FROM FLUE GAS
FUEL VALUE REPRESENTS TOTAL AMOUNT OF FUEL REQUIRED TO RUN BOTH THE KILN AND THE SECONDARY COMBUSTION CHAMBER. COMBUSTION AIR IS THE TOTAL MASS OF AIR REQUIRED TO MAINTAIN EXCESS OXYGEN IN THE KILN AND SECONDARY COMBUSTION CHAMBER.

STREAM S14A
FLUE GAS

FLUE GAS SOLIDS FLOW RATE IS BASED ON THE PREDICTED ASH FLOW ON THE COMPUTER MODEL (INCLUDED IN THIS APPENDIX). WATER FLOW REPRESENTS THE TOTAL WATER IN THE ENTERING SOLIDS, THE QUENCH WATER AND THE WATER CREATED FROM THE COMBUSTION PROCESS MINUS THE WATER THAT LEAVES IN THE ASH STREAMS (S5 & S6). NO METALS CONCENTRATIONS & PCB CONCENTRATIONS ARE NOT SHOWN BECAUSE IT IS UNKNOWN AT THIS TIME (DUE TO THE INCINERATOR CONFIGURATION BEING UNKNOWN) HOW THE METALS + PCBs WILL PARTITION.

STREAM S14B
EXIT GAS

THE EXIT GAS VALUES FOR SOLIDS & WASTE FLOW SOLIDS WERE GENERATED FROM THE INCINERATOR COMPUTER RUN. TOTAL WASTE FLOW CONSISTS OF ALL COMBUSTIO

ERM-New England, Inc. 205 Portland Street • Boston, Massachusetts 02114 • (617) 742-8228

Project NEW BEDFORD HOT SPOTS W.O. No. 208-01-09 Sheet 6 of 9
Subject RED ASSUMPTIONS By B. BREED Date 11/26/91
Chkd. by JDF Date 11/30/91

STREAM SUB (CONT.)

AIR, PRODUCTS OF COMBUSTION WATER, AND SOLIDS LEAVING THE STACK. FOR THE PURPOSE OF THIS MASS BALANCE IT WAS ASSUMED THAT THE INCINERATOR WILL EVAPORATE MOST OF THE WATER FROM THE FLY ASH AND THAT THE FLY ASH WILL LEAVE THE INCINERATOR AT 50% SOLIDS. THE VALUE FOR THE MASS OF WATER LEAVING THE INCINERATOR AS BLOWDOWN ON THE COMPUTER RUN HAS BEEN SHOWN AS LEAVING THE INCINERATOR IN THE EXIT GAS. THE CONCENTRATION OF PCBS & METALS LEAVING THE STACK WILL BE BASED ON ACHIEVING A DRE OF 6-9s, STACK HEIGHT AND AIR MODELLING. SINCE THE ULTIMATE CONFIGURATION OF THE INCINERATOR IS UNKNOWN, SHOWING THESE NUMBERS ON THE MASS BALANCE WOULD BE MISLEADING AND COULD LEAD TO THE CONTRACTOR MISINTERPRETING THE REQUIREMENTS OF THE CONTRACT. THUS THESE VALUES ARE NOT SHOWN.

STREAM S5
FLY ASH

THE VALUES FOR THE SOLIDS IN THE FLY ASH WERE BASED ON VALUES FROM THE COMPUTER MODEL. IT WAS ASSUMED FOR THE PURPOSE OF THIS MASS BALANCE THAT THE FLY ASH WILL

ERM-New England, Inc. 205 Portland Street • Boston, Massachusetts 02114 • (617) 742-8228

Project NEW BEDFORD HOT SPOTS W.O. No. 208-01-09 Sheet 9 of 9
Subject PFD ASSUMPTIONS By B. Reed Date 11/26/91
Chkd. by JDF Date 11/30/91

STREAM S5 (CONT.)

LEAVE THE INCINERATOR AT 50% SOLIDS CONCENTRATION. THE PCB CONCENTRATIONS WERE ASSUMED TO BE 0. THE FINAL ASH CONCENTRATION IS REQUIRED TO BE LESS THAN 5 PPM. SINCE THE FLY ASH IS ALSO PASSED THROUGH THE SECONDARY COMBUSTION CHAMBER IT WAS ASSUMED THAT THE PCB CONCENTRATION IN THE FLY ASH WILL BE SIGNIFIGANTLY LOWER THAT THE CONCENTRATION IN THE BOTTOM ASH. A VALUE OF 0ppm WAS CHOSEN. THE VALUE FOR THE METALS CONCENTRATION IN THE FLY ASH ASSUMES THAT APPROXIMATELY 15% OF THE METALS ARE CARRIED WITH THE FLY ASH.

STREAM S6
BOTTOM ASH

THE BOTTOM ASH SOLIDS VALUE IS BASED ON THE RESULTS OF THE COMPUTER MODEL. FOR THE PURPOSE OF THE MASS BALANCE IT WAS ASSUMED THE BOTTOM ASH WILL HAVE A WATER CONTENT OF APPROXIMATELY 2.9%. METALS CONCENTRAT WERE CALCULATED ASSUMING 85% OF THE METALS ARE CARRIED IN THE BOTTOM ASH. PCB CONCENTRATIONS ARE BASED ON SPECIFICATION REQUIREMENTS OF LESS THAN 5 PPM.

ERM-New England, Inc. 205 Portland Street • Boston, Massachusetts 02114 • (617) 742-8228

Project NEW BEDFORD HOT SPOTS W.O. No. 2UY-01-01 Sheet 8 of 9
Subject PFD ASSUMPTIONS By B. BREED Date 11/26/91
Chkd. by JDF Date 11/30/91

STREAM S7
ASH TO DISPOSAL

VALUES FOR MASS & CONCENTRATIONS OF SOLIDS, WATER, PCBS, AND METALS WERE DERIVED FROM THE ADDITION OF STREAM S5 TO S6.
THE TOTAL MASS OF SOLIDS IN THE ASH TO DISPOSAL WAS CALCULATED AS FOLLOWS:

7000 lb/HR → 1 lb/HR + 1 lb/HR + 6998 lb/HR

S4 — S4B (SOLIDS) — S4B (GASEOUS PRODUCTS OF COMBUSTION) — S7

Structural Calculations

- STRUCTURAL CALCULATIONS WILL BE PERFORMED FOR NEW WTP BUILDING (~80'x70')

The ERM Group — Environmental Resources Management, Inc. • Exton, Pennsylvania 19341 • (215) 524-3500

Project: NEW BEDFORD — W.O. No. F00-59 — Sheet 1 of ____
Subject: PRE-ENGINEER BLDG. FDN. — By: WHH — Date: 4-23-91
Chkd by: SPS — Date: 8-27-91

PRELIMINARY FOUNDATION LOADS.

SNOW LOAD = 35 PSF
WIND SPEED = 90 MPH (EXPOSURE 'C') P_z = 25 PSF
$h/L < 0.3$ $\theta \approx 0°$ WINDWARD SUCTION = -0.70 LEEWARD SUCTION = -0.70

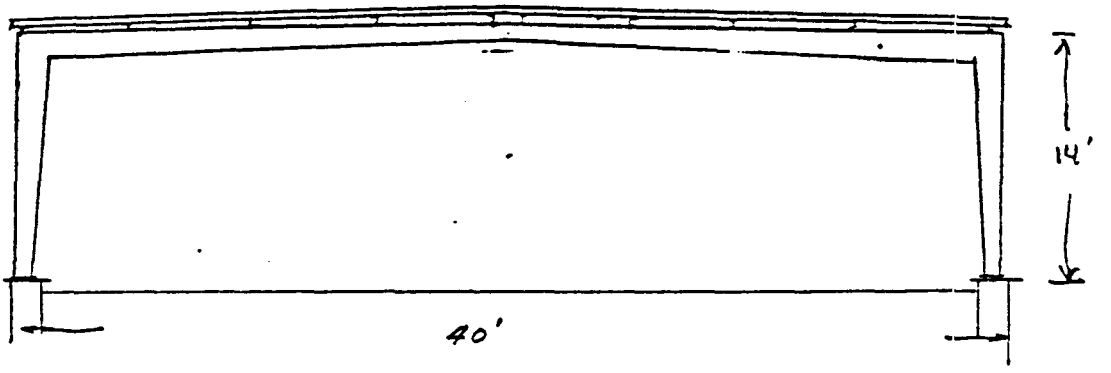

CENTER SPAN

DESIGN WIDTH = 15.0'

DEAD LOADS:

METAL DECK	=	2 PSF
INSULATION	=	2 PSF
ELECT/HVAC	=	3 PSF
PURLINS 5 x 10#/FT x 15' x 2 ÷ 40 x 15 =	=	2.5 PSF
SNOW LOAD:	=	35.0 PSF
FRAME LOAD (ASSUME)		30 PLF
COL LOAD (ASSUME)		30 PLF

VERTICAL COL LDS (CTR-FRAME)

ROOF = (2.0 + 2.0 + 3.0 + 2.5 (9.5))(15.0')(40'/2) = 2850
FRAME = (30.0)(40/2) + (30)(14) = 1020
O.L. = 3870 #
SNOW = (35)(15.0)(40/2) LL. = 10500 #
DL + LL = 14,370 #

VERTICAL COL LDS (1ST INTERIOR FR.)

DESIGN WIDTH = (15 + 20)(.5) = 17.50'

ROOF = P.F. req. (8.5)(17.5)(40'/2) = 2975
FRAME 1020
DL. = 3995 #
SNOW = (35)(17.5)(40/2) = 12250 #
DL + LL = 16245 #

The ERM Group — Environmental Resources Management, Inc. • Exton, Pennsylvania 19341 • (215) 524-3500

Project: NEW BEDFORD — W.O. No. F00-59 — Sheet 2 of
Subject: PRE-ENGINEERED BLDG FDN. — By: WHN — Date: 4-29-91
Chkd by: SDS — Date: 8-27-91

END FRAMES

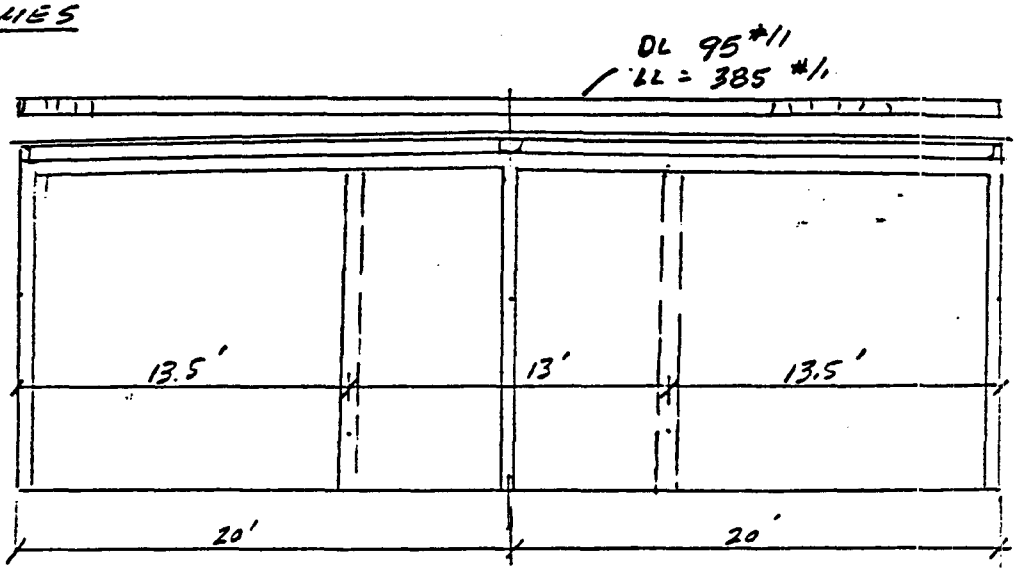

DESIGN WIDTH = 20'

ROOF LOADS:

ROOF DL = 9.5 psf (8.5)(10+1) = 93.5 #/FT
SNOW = (35)(11) = 385
478.5
SAY 480 #/FT

CORNER COLUMNS: (COL = 14 x 20 #/') = 280 #
DL = (95)(20)/2 = 950 # } 1230 #
LL = (385)(20/2) = 3850 #
DL + LL = 5080 #

CTR COL.
DL = (95)(20) + 280 = 2180 #
LL = (385)(20) = 7700 #
DL + LL = 9880 #

TWO COL END FRAME

CORNER COL'S = (95)(13.5)(.5) + 280 — DL = 921 #
= (385)(13.5/2) — LL = 2599
DL + LL = 3520 #

INTER COL'S = (95)(13 + 13.5)(.5) + 280 (13.25') — DL = 1539 #
= (385)(13.25) — LL = 5101 #
DL + LL = 6640 #

Project: NEW BEDFORD — W.O. No. F00-59 — Sheet 3 of ___
Subject: PRE-ENGINEERED BLDG FDN — By: WHH — Date: 4-23-91
Chkd by: SAS — Date: 8-27-91

WIND LOADS

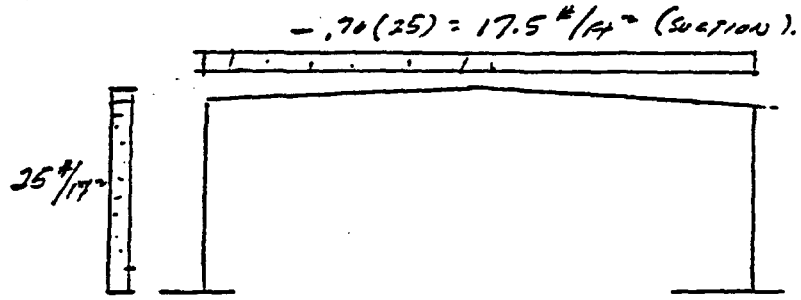

LATERAL LOADS:

CTR. COLUMNS	= (25 #/ft²)(14')(15') =	5250/2 =	2625 #/col
1ST INTER.	= (25 #/ft²)(14')(17.5) =	6125/2 =	3063 #/col
EXTERIOR	= (25)(14)(10) =		3500 # (tot.)

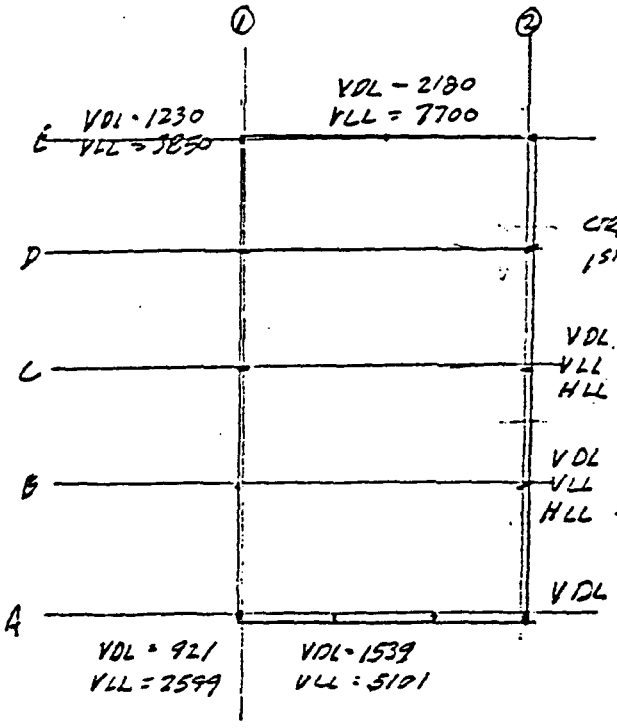

OVERTURNING:

CTR: (25)(15)(14)²/2 ÷ 40 = ± 918

1ST INT = (25)(17.5)(14)²/2 ÷ 40 = ± 1072

SUCTION:

CTR (17.5)(15)(20)(30)/40 = 3938

1ST INTER (17.5)(17.5)(20)(30)/40 = 4594

VDL = 3870
VLL = 10500 ± 918 (-3938)
HLL = 2625

VDL = 3995
VLL = 12250 ± 1072 (-4594)
HLL = 3063

The ERM Group — Environmental Resources Management, Inc. • Exton, Pennsylvania 19341 • (215) 524-3500

Project: NEW BEDFORD. W.O. No. F00-59 Sheet 4 of
Subject: PRE-ENGINEERED BLDG FDN By: WHH Date: 2-21-91
Chkd by: SPS Date: 3-22-91

FOUNDATION DESIGN

ASSUME ALLOWABLE SOIL BRG = 2000 PSF 1.0 TONS/FT²
CONCRETE = 150 PCF
REINF. = GRADE 60
FOUND. DEPTH = 42" (MIN) BELOW FINISHED GRADE

CTR COLUMN

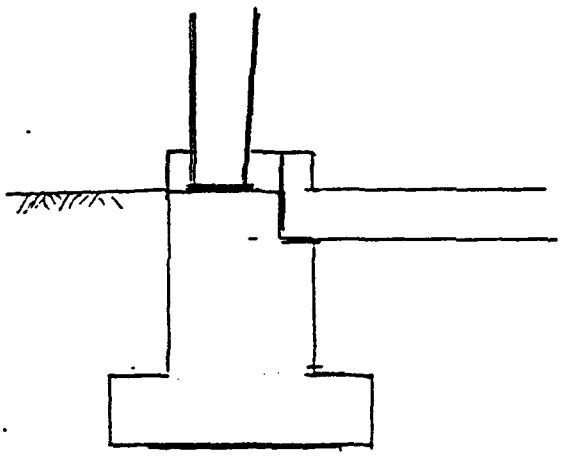

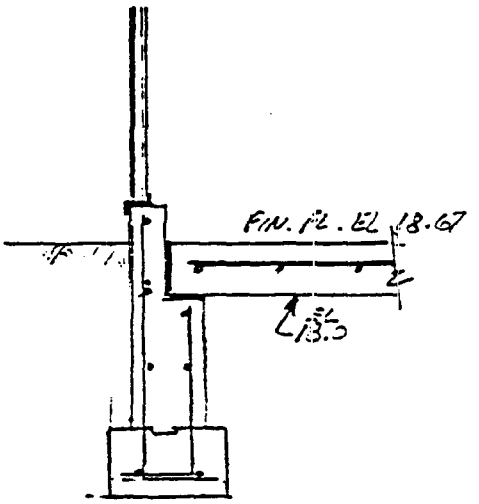

TYP. BLDG. SECTION

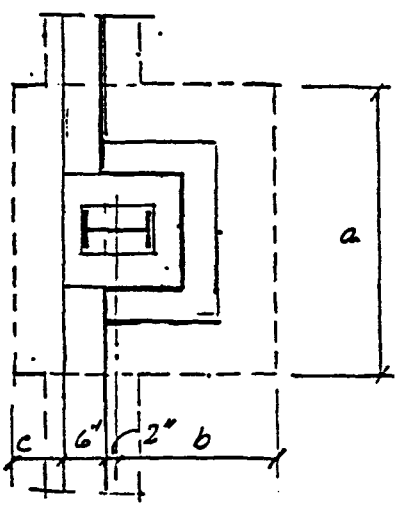

TYP. INTER COL FTG

The ERM Group — Environmental Resources Management, Inc. • Exton, Pennsylvania 19341 • (215) 524-3500

Project: NEW BEDFORD — W.O. No. F00-59 — Sheet 5 of
Subject: PRE-ENGRG BLDG. — By: WHH — Date: 4-29-91
Chkd by: SPS — Date: 8-27-91

CTR COL FTG. (COL LINE 'C')

V_{DL} = 3,870# V_{LL} = 10,500 ± 918 (-3938) H_{LL} = 2625

MAX VERT. LOAD = 3870 + 10500 + 918 = 15,288#
MIN " " = 3870 - 918 - 3938 = - 986#
MAX HOR. = 2625#
ALLOWABLE SOIL BRG = 2000 PSF
TRY SIZE:
COL = 15288#
TRY a = 3.5 b = 2.17 c = 0.66
A = 3.5 x 3.5 = 12.25 FT² $f_p = \frac{15288}{1225}$ = 1248 PSF

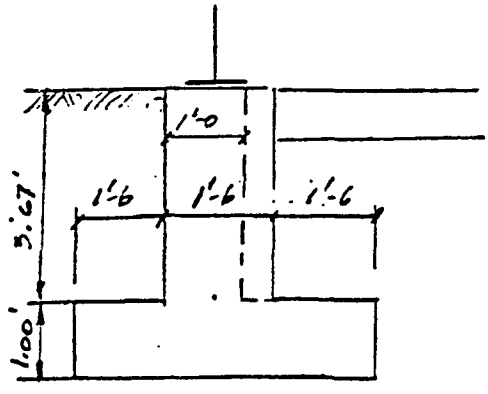

CASE 1 (NO EARTH OR SLAB.)

	Kips.		Kft
W_1 (3.67)(4.5)(1.0)(.15)	= 2.477	x 2.30	= 6.193
W_2 (1.5)(0.5)(3.67)(.15)	= 0.413	x 1.75	= 0.723
F (4.5)²(1.0)(.15)	= 3.038	x 2.25	= 6.834
	5.928		13.750

CG = 1.972' e = -0.228

COL LD	15.3	x 2.33	= 35.649
	21.228		49.399

CG = 2.327' e = 0.077'

$S_{FTG} = \frac{1}{6}(4.5)^3 =$ 15.188 FT³

$\frac{P}{A} \pm \frac{Pe}{S} = \frac{21.228}{(4.5)^2} \pm \frac{(21.228)(.077)}{15.188}$

1.048 ± 0.108 = 1.156 PSF, 0.940 PSF

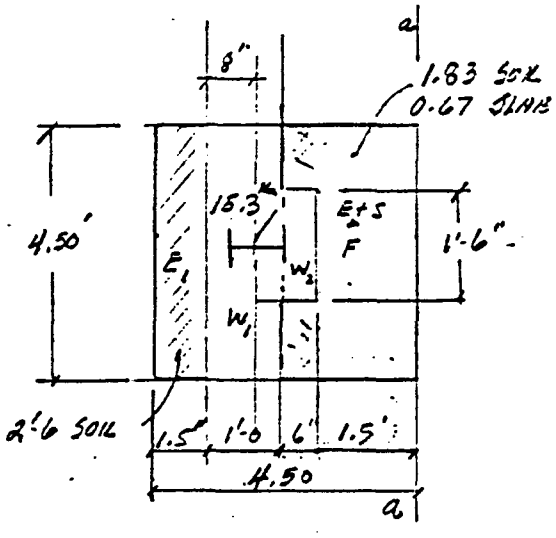

The ERM Group — Environmental Resources Management, Inc. • Exton, Pennsylvania 19341 • (215) 524-3500

Project: NEW BEDFORD — W.O. No. F0059 0001 — Sheet 6 of
Subject: PRE-ENGINEERED BLDG FDN. — By: KHH — Date: 4-24-91
Chkd by: SPS — Date: 8-27-91

CTR COL FTG (CONT.).

CASE II (COL + EARTH & SLAB)

ΣM_{a-a}

E_1 = (3.5)(1.0)(.120)(2.5)	19.051 × 2.000		38.864
	1.050 × 3.250		3.413
E_2 = (1.5)(3.5)(.120)(1.83)	1.153 × 0.750		0.865
S = (1.5)(3.5)(.150)(.67)	0.528 × 0.750		0.396
	21.782		43.538
Earth O.T. (.035)(2.5)³/6(3.5)			− 0.319
			42.219

$CG = \frac{42.219}{21.782} = 1.938 \quad e = 0.188$

$\frac{21.782}{(3.5)^2} \pm \frac{(21.782)(.188)}{7.146} = 1.778 \pm 0.573$ — 2.351 < 2.500 OK; 1.205 OK — NG.

CASE II

ΣM_{a-a}

W_1	=	2.477	×	2.50	=	6.193 ✓
W_2	=	0.413	×	1.75	=	0.722 ✓
F = (4.5)²(1.0)(.150)	=	3.038	×	2.25	=	6.836 ✓
COL	=	15.288	×	2.33	=	35.621 ✓
E_1 = (4.5)(1.5)(2.5)(.12)	=	2.025	×	4.00	=	8.100
E_2 (4.5)(2.0)(1.83)(.12)	=	1.976	×	1.00	=	1.976
S (4.5)(2.0)(.15)(.67)	=	0.905	×	1.00	=	0.905
		26.122				60.353
EARTH OT (.035)(3.5)³/6(4.50)						− 1.125
						59.228

$CG = \frac{59.228}{26.122} = 2.267 \quad e = 0.017'$

Ftg S_x = (4.5)(4.5)²/6 = 15.188 Ft³

$\frac{(26.122)}{(4.5)^2} \pm \frac{(26.122)(.017)}{15.188} = 1.290 \pm 0.029 = 1.319 < 2.00$; 1.261 OK

CASE III (CASE II + HOR. LL)

26.122 — 59.228

± 2.025 (3.50) — ± 4594

63822/54634

LL = 2.443 — LL = 2.091

e = 0.193 — e = −0.159

$\frac{26.122}{(4.5)^2} \pm \frac{26.122(.193)}{15.188} = 1.290 \pm 0.332 = 1.622$; 0.958 < 2.0 OK

$\frac{26.122}{(4.5)^2} \pm \frac{26.122(.159)}{15.188} = 1.290 \pm 0.273 = 1.563$; 1.017 < 2.0 OK

Project: NEW BEDFORD — W.O. No. F00-59 — Sheet 7 of
Subject: PRE-ENGINEERED BLDG FDN — By: WHH — Date: 5-14-91
Chkd by: SPS — Date: 9-27-91

INTERMEDIATE FRAME FOUNDATIONS - COL: LINES B, C, & D

ESTIMATED LOADS:

$V_{DL} = 4.00^k$ $V_{LL_{WPS}} = 12.25^k \pm 1.07^k$ (-4.59^k SUCTION)

$H_{LL} = 3.06^k$

MAX. SOIL BEARING = 1600 PSF. (SURU SHAH)

TRY 5'-0 x 5'-0

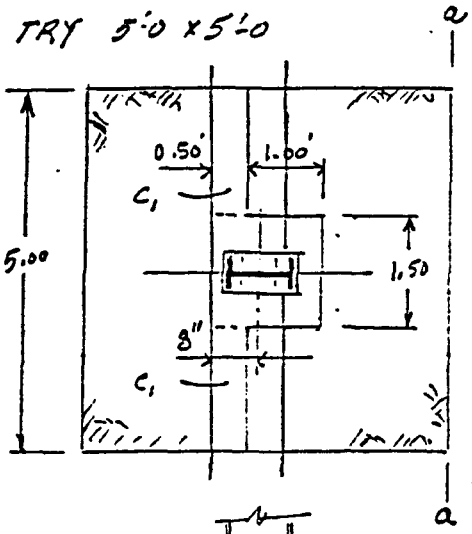

LOAD COND. 1 D.L. + EARTH.

ΣM_{a-a}

$F = 5.0 \times 5.0 \times 1.0 \times .15 =$	3.750	x 2.50	= 9.375
$P = 1.5 \times 1.5 \times 3.67 \times .15 =$	1.239	x 2.50	= 3.098
$C_1 = 3.5 \times .5 \times .5 \times .15 =$	.131	x 2.00 (3.00)	= 0.262
$S = 1.75 \times 5.0 \times .67 \times .15 =$	.879	x 0.875	= 0.769
$E_1 = 1.75 \times 5.0 \times 2.5 \times .12 =$	2.625	x 0.875	= 2.298
$E_2 = 1.75 \times 5.0 \times 3.17 \times .12 =$	3.329	x 4.125	= 13.732
	11.953^k		29.534^{kF}
CG = 2.471'			
P_V (DL	+ 4.000	x 2.583	10.320
	15.953		39.854

CG = 2.498 e = 0.002

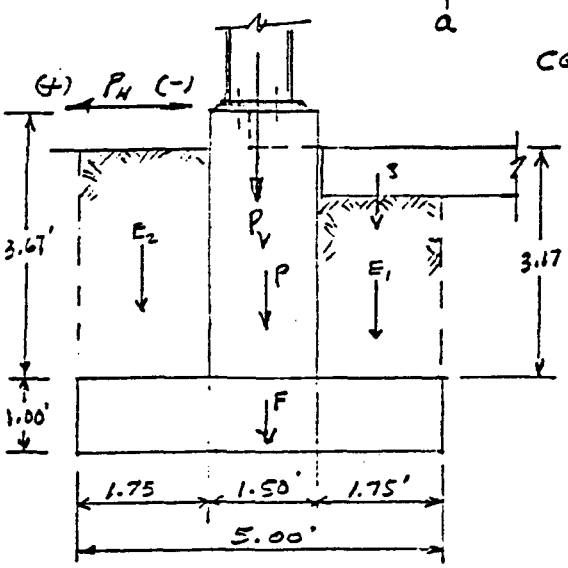

CONO. 2 DL + EARTH + SNOW. LL.

	11.953		29.534
P_V =	16.250	x 2.583	41.974
	28.203		71.508

C.G = 2.535' e = 0.035'

$P/A = 28.203/25 FT^2 = 1.128$ KSF.

CONO. 3 DL + EARTH + P_V(DL) + WIND)

	11.953		29.534
P_V = 4.00-1.07-4.59	-1.660	x 2.583	-4.288
	10.293		25.246
P_H = -3.06		x 4.67	= -14.290
	10.293		10.956

CG = 1.064 e = 1.436'

$S_{FTG} = \frac{bd^2}{6} = \frac{(5.0)(5.0)^2}{6} = 20.83 FT^3$

$A = (5.0)^2 = 25 FT^2$

$P/A \pm \frac{Pe}{S} = \frac{10.293}{25} \pm \frac{10.293(1.436)}{20.83}$

$0.412 \pm 0.710 = 1.122$, -0.298

UPLIFT MUST BE RESISTED BY ADDL LGTH. OF FDN WALL

ERM Environmental Resources Management, Inc. • Exton, Pennsylvania 19341 • (215) 524-3500

Project NEW BEDFORD W.O. No. F00-59 Sheet 8 of
Subject PRE-ENGINEERED BLDG FDN By WHH Date 5-15-91
Chkd by SPS Date 8-27-91

INTERMEDIATE FRAME FDN (CONT)

COND 4 DL + EARTH + P_V (DL) − WIND

P_V = 4.00 + 1.07 − 4.59 = 3.06 (SUCTION)

11.953		29.534
0.480	× 2.583 =	7.568
	× 4.670 =	14.290
12.433		51.392

CG = 4.134 e = 1.634'

$\frac{12.433}{25} \pm \frac{1.634\,(12.433)}{20.83} = 0.497 \pm 0.975$ 1.472 ksf / −.478 ksf

COND 5 (DL + EARTH + R_V (SNOW) + WIND)

(NEG WIND OT + SUCT.) P_W = −3.060, P_H = −3.060

28.203		71.508
− 5.660	× 2.583	− 14.620
	× 4.670	−14.290
22.543		42.598

CG = $\frac{42.598}{22.543}$ = 1.890 e = 0.61'

$P/A \pm Pe/S = 22.543/25 \pm \frac{22.543 \times 0.61}{20.83} = 0.902 \pm 0.660$ = 1.562 ksf / 0.242 ksf

COND 6 (DL + EARTH + SNOW − WIND)

P_V = 1.07 − 4.59 (SUCTION) − 3.06

28.203		71.508
− 3.520	× 2.583	− 9.092
	× 4.670	− 14.290
24.683		48.126

CG = 1.950 e = 0.55'

$P/A \pm Pe/S = \frac{24.683}{25} \pm \frac{24.683 \times .55}{20.83} = 0.987 \pm 0.652$ = 1.639 ksf / 0.335 ksf

OK USE 5'-0 × 5'-0 FTG.

FTG REINF

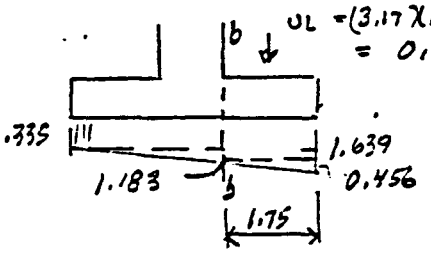

UL = (3.17)(.12) + (.67)(.15) + (1.0)(.15) = 0.481 k/ft

$\Sigma M_{b-b} = (.631)(1.75)^2(.5) - (1.183)(1.75)^2(.5) - (.456)(1.75)^2/3$
= −1.311 kf/ft

TOTAL M = −1.311 × 5.0' = 6.55 fk

$d = 8.75''$ $A_s = \frac{6.55}{1.76 \times 8.75} = 0.43\ in^2$

USE 6-#4 EW BOT.
A_s = 1.20 in²

Project: NEW BEDFORD — W.O. No. F00 59 — Sheet 9 of
Subject: PRE-ENGINEER BLDG FDN. — By: WHH — Date: 7-29-91
Chkd by: SPS — Date: 8-22-91

COL. FTG. (COL. LINES B & D)

V_{DL} = 3995# V_{LL} = 12250# ± 1072# (-4594)# VH = 3063#
= 4.00"

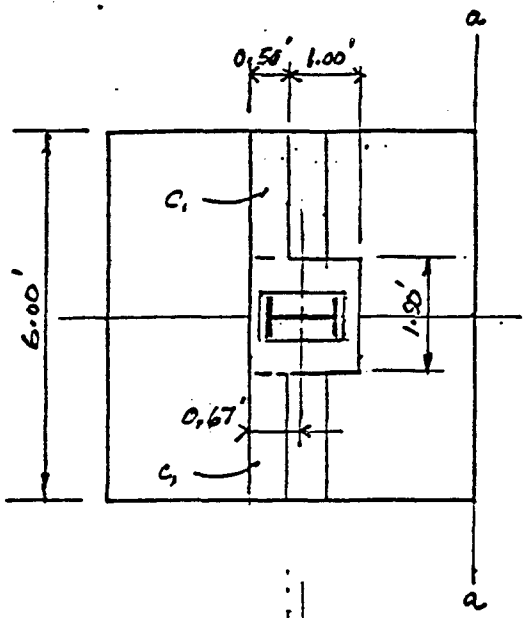

MAX SOIL LOAD = 1600 PSF
TRY 5'-0 x 6'-0 W FTG.

LOAD COND 1. (DL + EARTH.)

ΣM_{a-a}.

F = 5.0 x 6.0 x 1.0 x .15 = 4.50 x 2.50' = 11.25
P = 1.5 x 1.5 x 3.67 x .15 = 1.24 x 2.50' = 3.10
C_1 = 4.5 x .5 x .5 x .15 = 0.17 x 3.00' = 0.51
S = 1.75 x 6.0 x .67 x .15 = 1.06 x 0.88' = 0.93
E_1 = 6.00 x 2.50 x 1.75 x .12 = 3.15 x 0.88' = 2.77
E_2 = 6.00 x 3.17 x 1.75 x .12 = 3.99 x 4.13' = 16.48
14.11 — 34.11

CG = 34.11/14.11 = 2.42'

P_v = 4.00 x 2.58 = 10.32
18.11# — 44.43

CG = 2.453' e = 0.047'

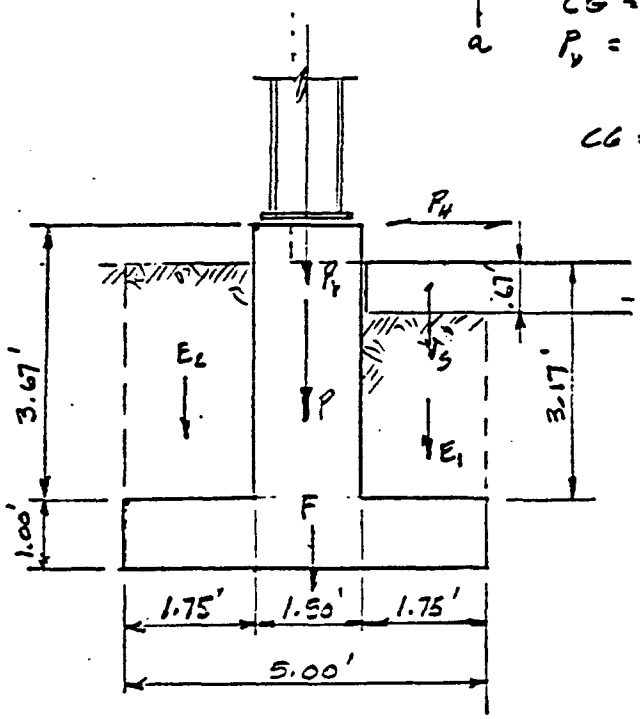

The ERM Group — Environmental Resources Management, Inc. • Exton, Pennsylvania 19341 • (215) 524-3500

Project: NEW BEDFORD — W.O. No. F00-59 — Sheet 10 of
Subject: PRE-ENGINEERED BLDG FDN — By: WHH — Date: 7-29-91
Chkd by: SPS — Date: 9-27-91

CORNER COLUMN FOOTINGS - COL LINES A & E

$V_{DL} = 1230 \quad V_{LL} = 3850$

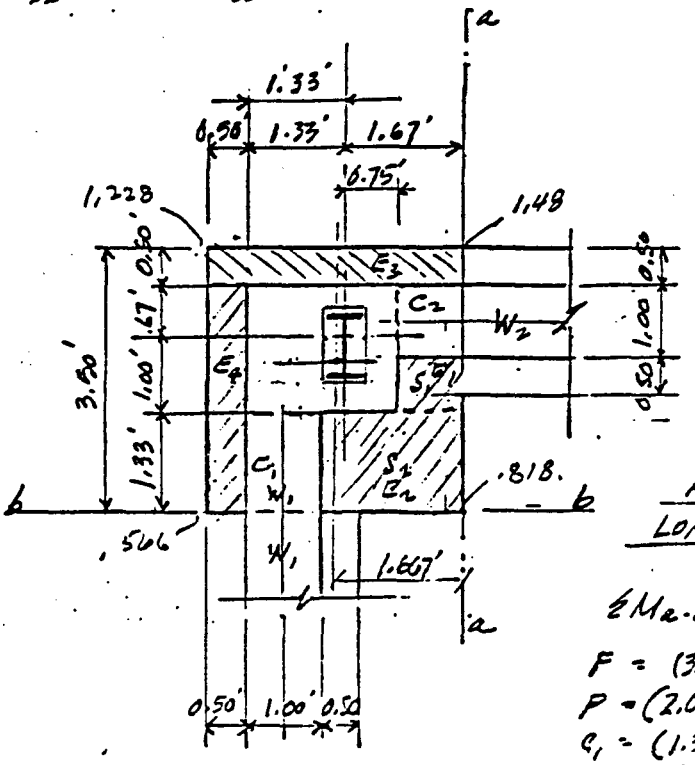

ALLOW SOIL BRG = 1600 PSF
LOAD COND #1 (DL + EARTH)

ΣM_{a-a}

$F = (3.5)(3.5)(1.0)(.15)$	$= 1.84$	$\times 1.75' =$	3.22
$P = (2.08)(1.67)(3.67)(.15)$	$= 1.91$	$\times 1.67' =$	3.19
$C_1 = (1.33)(.5)^2(.15)$	$= 0.05$	$\times 2.75 =$	0.14
$C_2 = (0.92)(.5)^2(.15)$	$= 0.03$	$\times 0.46 =$	0.02
$W_1 = (1.33)(1.0)(3.17)(.15)$	$= 0.63$	$\times 2.50 =$	1.58
$W_2 = (0.92)(1.0)(3.17)(.15)$	$= 0.44$	$\times 0.46 =$	0.20
$S_1 = (0.67)(.92)(.67)(.15)$	$= 0.06$	$\times 0.46 =$	0.03
$S_2 (1.33)(2.0)(.67)(.15)$	$= .27$	$\times 1.00 =$	0.27
$E_1 (.67)(.92)(2.5)(.12)$	$= .18$	$\times 0.46 =$	0.09
$E_2 (1.33)(2.0)(2.5)(.12)$	$= .80$	$\times 1.00 =$	0.80
$E_3 (3.5)(.5)(3.17)(.12)$	$= .67$	$\times 1.75 =$	1.16
$E_4 (3.0)(.5)(3.17)(.12)$	$= .57$	$\times 3.25 =$	1.85
	7.45#		12.55
P	1.23	$\times 1.67 =$	2.05
	8.68		14.60

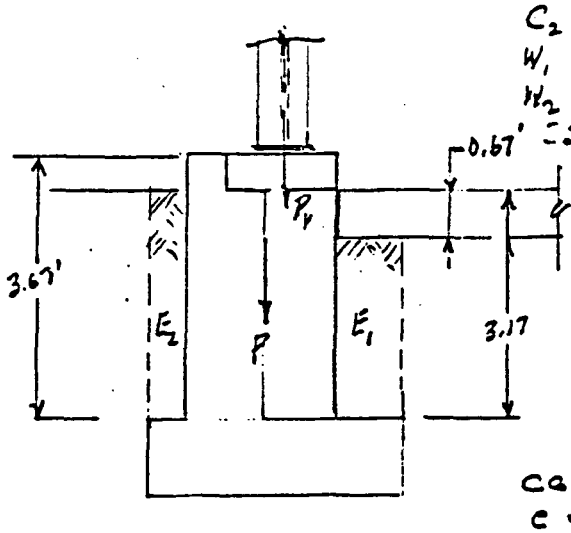

$ca = 14.60/8.68 = 1.68'$

$e = 0.07 \qquad P/A = \frac{8.68}{(3.5)^2} = 0.71$ KSF.

The ERM Group — Environmental Resources Management, Inc. • Exton, Pennsylvania 19341 • (215) 524-3500

Project: NEW BEDFORD — W.O. No. F00-59 — Sheet 11 of
Subject: PRE-ENGR. BLDG. FDN — By: WJH — Date: 7-29-91
Chkd by: SDS — Date: 8-27-91

FTG COL'S A & E (CONT.)

COND 2 (DL + EARTH + SNOW LL)

$\Sigma M_{a-a} / \Sigma M_{b-b}$

		WGT	x	M_x	y	M_y
F	(3.5)²(1.0)(.15) =	1.84	1.75	3.22	1.75	3.22
P	(2.08)(1.67)(3.67)(.15) =	1.91	1.67	3.19	2.33	4.45
C_1	(1.33)(.50)²(.15) =	0.05	2.75	0.14	0.67	0.03
C_2	(0.92)(.5)²(.15) =	0.03	0.46	0.01	2.75	0.08
W_1	(1.33)(1.0)(3.17)(.15) =	0.63	2.50	1.58	0.67	0.42
W_2	(0.92)(1.0)(3.17)(.15) =	0.47	0.46	0.20	2.50	1.10
S_1	(0.67)(.92)(.67)(.15) =	0.06	0.46	0.03	1.67	0.10
S_2	(1.33)(2.0)(.67)(.15) =	0.27	1.00	0.27	0.67	0.18
E_1	(0.67)(.92)(2.5)(.12) =	0.18	0.46	0.08	1.67	0.30
E_2	(1.33)(2.0)(2.5)(.12) =	0.80	1.00	0.80	0.67	0.54
E_3	(3.5)(.5)(3.17)(.12) =	0.67	1.75	1.17	3.25	2.18
E_4	(3.0)(.5)(3.17)(.12) =	0.57	3.25	1.85	1.50	0.86
		7.45 k		12.54		13.46
$P_{r_{DL}}$ =		1.23	1.67	2.05	2.33	2.87
		8.68 k <		14.59 <		16.33 <

$e_x = 1.75 - 14.59/8.68 = 0.069'$ $\quad e_y = 1.75 - 16.33/8.68 = -0.131'$

COND 3 ($DL + E + P_{r_a}$)

	+ 3.85	1.67	6.43	2.33	8.97
	12.53 <		21.02 <		25.30 <

$e_x = 1.75 - 21.02/12.53 = 0.072'$ $\quad e_y = 1.75 - \frac{25.30}{12.53} = -0.189'$

$S_{FTG} = (3.5)^3/6 = 7.146\ ft^3$

$$\frac{P}{A} \pm \frac{Pe_x}{S_x} \pm \frac{Pe_y}{S_y} = \frac{12.53}{(3.5)^2} \pm \frac{(12.53)(.072)}{7.146} \pm \frac{(12.53)(.189)}{7.146}$$

$1.023 \pm 0.126 \pm 0.331 =$ 1.48 KSF
1.228
0.818
0.566

REINFORCING

$w = 1.48 - .67(.15) - (2.50)(.12) = 1.08$ KSF

$M = wL^2/2 = (1.08)(1.50)^2/2 = 1.215$ $\quad d = 12 - 3 - .5 - .25 = 8.25"$

$A_s = \frac{1.215}{1.76 \times 8.25} = 0.08\ in^2$ $\quad$ # 4 @ 12" E.W (BOT)

The ERM Group — Environmental Resources Management, Inc. • Exton, Pennsylvania 19341 • (215) 524-3500

Project: NEW BEDFORD — W.O. No. F00 59 — Sheet 12 of
Subject: PRE-ENGINEERED BLDG. — By: WHH — Date: 7-29-91
Chkd by: SPS — Date: 8-22-91

INTERMEDIATE COL. FTG. (CONT.)

CHECK MAX UPLIFT COND.

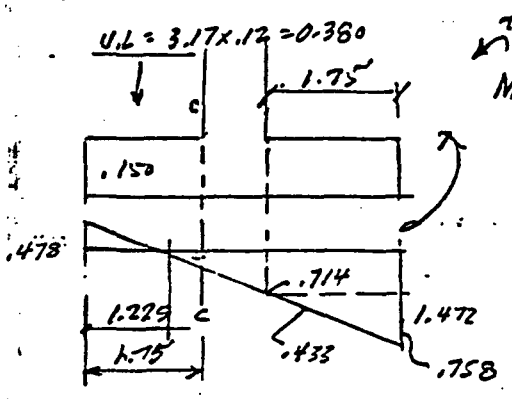

$M_{e.c} = (.380 + .150)(1.75)^2/2 - (.478)(1.225)(.5)(1.342)$

$0.812 - 0.196 = +0.616^{kip}$

TOP STEEL $M_T = .616(5.0) = 3.08^{FK}$

$A_s = \frac{.616}{1.76 \times 8.75} = .04 \text{ in}^2$. NO TOP REINF

$M = (.714)(1.70)^2(.5) + (.758)(1.75)^2/3 - (.530)(1.75)(.5) = 1.06^{kip}/ft$

$d = 8.5$

$A_s = \frac{1.06}{1.76 \times 8.5} = 0.07$ #4 @ 12" EW BOTT.

Project NEW BEDFORD **W.O. No.** F0059 0001 **Sheet** 1 **of** 1
Subject SIL FLOCC. TANK **By** WNH **Date** 5-13-91
WALKWAY & MIXER SUPPORT **Chkd by** SPS **Date** 8-27-91

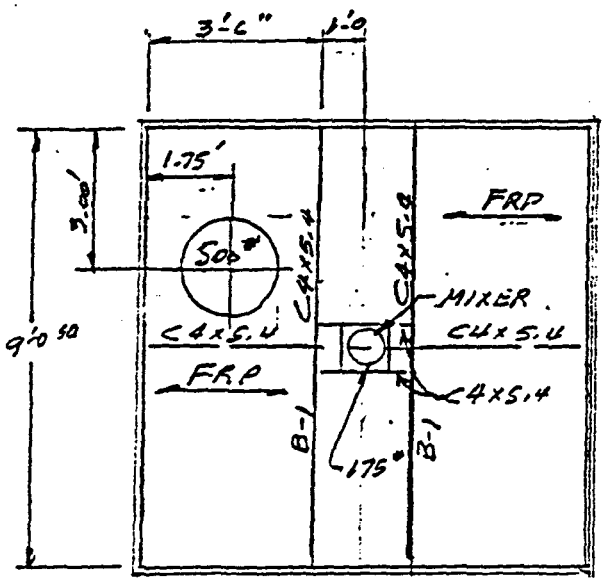

MIXER WGT. = 300# (INCL SHAFT.)
L.L = 20 PSF
FRP. LID = 2.4 PSF.

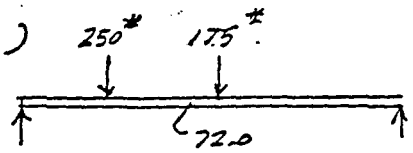

BEAM B-1

COVER (LID) = (22.4)(3.5/2 + 1.0) = 61.6 PLF
BEAM = 10.4
DL + LL = 72.0 PLF

R_1 (72.0)(9.0)(.5) + 175/2 + 500 × 6.0/9.0 = 745#
R_2 = (72.0)(9.0)(.5) + 175/2 + 500 × 3.0/9.0 = 578#
x = 3.403' FROM R_1
M = (745)(3.403) − (500)(.403) − (72.0)(3.403)²/2 = 1917 FT-lbs

TRY C4 X 5.4 S_x = 1.93 I = 3.85 d/A_f = 8.52

f_b = M/S = (1917 × 12)/1.93 = 11,918 PSI

BRACE AT MID-POINT

F_b = 1000/(8.52 × 4.5) > 24000 PSI

w ≈ 8M/L² = (8)(1917)/(9)² = 189 #/FT

Δ ≈ (5)(189)(9.0)⁴(1728)/(384)(29000)(3.85) = 0.25" L/432 OK

USE C4 x 5.4 BEAMS & BRACES

APPENDIX G

List of Technical Specifications

Draft Technical Specifications
New Bedford Harbor O.U. #1

Division 1 General Requirements

01010 Summary of Work
01050 Field Engineering
01300 Submittal Descriptions
01305 Submittal Procedures
01700 Project Closeout

Division 2 Site Work

02221 Excavation, Filling, and Backfilling for Buildings
02222 Excavation, Trenching, and backfilling for Utilities Systems
02210 Grading
02445 Bumper and Guard Posts
02831 Chain Link Fence
02935 Turf

Division 3 Concrete

03050 Concrete, General
03110 Concrete Formwork
03200 Concrete Reinforcement
03310 Cast-in-Place Structural Concrete

Division 4 (Not Used)

Division 5 Metals

05500 Miscellaneous Metal

Division 6 (Not Used)

Division 7 - Thermal and Moisture Protection

07920 Joint Sealing

Division 8 Doors and Windows

08120 Aluminum Doors and Frames
08360 Rolling Door
08700 Hardware: Builders' (General Purpose)
08810 Glass and Glazing

Division 9 Finishes

09900 Painting

Division 10 Specialties

10440 Interior Signage
10522 Portable Fire Extinguishers

Division 11 - Equipment

11010 Mechanical Equipment and Installation
11200 Combination Steam Cleaner and Pressure Washer
11310 Pumps
11311 Metering Pumps
11315 Tanks
11345 Media Filtration
11347 Chemical Addition Systems
11360 Air Compressor
11523 Polishing Filter
11560 UV/Hydrogen Peroxide Equipment and Hydrogen Peroxide Storage/Feed System
11630 Composite Wastewater Sampler
11660 In-line Static Mixer

Division 13 - Special Construction

13120 Pre-Engineered Building
13200 Operation and Maintenance

Division 15 - Mechanical

15011 Mechanical, General Requirements
15060 Piping and Valves
15140 Hangers and Supports
15620 Heating Systems
15850 Exhaust Fans

Division 16 - Electrical

16011 Electrical, General Requirements
16118 Interior Wiring Systems
16510 Interior/Exterior Lighting
16723 Security Alarm Systems
16900 Controls and Instrumentation, General
16910 Flowmetering and Pressure Systems
16925 Programmable Controllers (PLC)
16962 Level Systems
16966 Anuunicators
16980 Alarm/Data Telemetering Systems
16992 Instrument Control Panel
16995 Safety Monitoring Sensor/Analyzers

APPENDIX H

Operation and Maintenance Manual Outline

New Bedford Harbor Superfund Site
Wastewater Treatment Plant
Draft O&M Manual Outline

1.0 INTRODUCTION
- 1.1 Purpose
- 1.2 Organization and Use of the O&M Manual
- 1.3 Sampling Plan

2.0 PROJECT BACKGROUND
- 2.1 Site Location and History
- 2.2 Scope of Work
- 2.3 Supporting Documentation
- 2.4 Staffing/Training
  - 2.4.1 Staffing
  - 2.4.2 Training

3.0 REGULATORY REQUIREMENTS

4.0 RECORDS MANAGEMENT
- 4.1 Introduction
- 4.2 Process Control Recording
  - 4.2.1 Process Monitoring
  - 4.2.2 Equipment Operation Monitoring
- 4.3 Laboratory Data
- 4.4 *Inventory Monitoring and Recording*
- 4.5 Personnel Management

5.0 HEALTH & SAFETY

6.0 PROCESS OVERVIEW
- 6.1 Process Description
  - 6.1.1 Description of Dredging and Dewatering Operations
  - 6.1.2 Description of Wastewater Treatment System
- 6.2 Effluent Limits

6.0 SYSTEM STARTUP & SHUTDOWN PROCEDURES
- 6.1 System Start-Up Procedures
  - 6.1.1 New Water Treatment System
  - 6.1.2 Existing Treatment System
- 6.2 Manual System Shutdown
  - 6.2.1 New Water Treatment System
  - 6.2.2 Existing Treatment System
- 6.3 Automatic System Shutdown
  - 6.3.1 New Water Treatment System
  - 6.3.2 Existing Treatment System
- 6.4 Emergency System Shutdown Procedures
  - 6.4.1 New Water Treatment System
  - 6.4.2 Existing Treatment System
- 6.5 Temporary Power Usage Procedures
  - 6.5.1 Short Term Power Outage
  - 6.5.2 Long Term Outage

7.0 SYSTEM OPERATIONS

- 7.1 CDF Pumping Station
  - 7.1.1 Major Components
  - 7.1.2 Inspection Tasks
  - 7.1.3 Maintenance Procedures
  - 7.1.4 Lessons Learned
- 7.2 CDF 2 Pumping Station
  - 7.2.1 Major Components
  - 7.2.2 Inspection Tasks
  - 7.2.3 Maintenance Procedures
  - 7.2.4 Lessons Learned
- 7.3 New Water Treatment System
  - 7.3.1 Multimedia Filtration
    - 7.3.1.1 Major Components
    - 7.3.1.2 Inspection Tasks
    - 7.3.1.3 Maintenance Procedures
    - 7.3.1.4 Lessons Learned
  - 7.3.2 Storage Tank 101
    - 7.3.2.1 Major Components
    - 7.3.2.2 Inspection Tasks
    - 7.3.2.3 Maintenance Procedures
    - 7.3.2.4 Lessons Learned
  - 7.3.3 Cartridge Filtration
    - 7.3.3.1 Major Components
    - 7.3.3.2 Inspection Tasks
    - 7.3.3.3 Maintenance Procedures
    - 7.3.3.4 Lessons Learned
  - 7.3.4 UV/Oxidation
    - 7.3.4.1 Major Components
    - 7.3.4.2 Inspection Tasks
    - 7.3.4.3 Maintenance Procedures
    - 7.3.4.4 Lessons Learned
- 7.4 Existing Water Treatment System
  - 7.4.1 Sand Filtration
    - 7.4.1.1 Major Components
    - 7.4.1.2 Inspection Tasks
    - 7.4.1.3 Maintenance Procedures
    - 7.4.1.4 Lessons Learned
  - 7.4.2 Storage Tank
    - 7.4.2.1 Major Components
    - 7.4.2.2 Inspection Tasks
    - 7.4.2.3 Maintenance Procedures
    - 7.4.2.4 Lessons Learned
  - 7.4.3 Cartridge Filtration
    - 7.4.3.1 Major Components
    - 7.4.3.2 Inspection Tasks
    - 7.4.3.3 Maintenance Procedures
    - 7.4.3.4 Lessons Learned
  - 7.4.4 UV/Oxidation
    - 7.4.4.1 Major Components
    - 7.4.4.2 Inspection Tasks
    - 7.4.4.3 Maintenance Procedures
    - 7.4.4.4 Lessons Learned

7.5 CDF 3 Pumping Station
7.5.1 Major Components
7.5.2 Inspection Tasks
7.5.3 Maintenance Procedures
7.5.4 Lessons Learned

8.0 TREATMENT BUILDING OPERATION AND MAINTENANCE
8.1 Tools, Equipment and Supplies
8.2 Housekeeping Schedule
8.3 Heating, Ventilation and Air Conditioning
8.4 Electrical Service
8.5 Fire Protection
8.6 Building Security
8.7 Plumbing and Drains
8.8 Potable Water
8.9 Sanitation
8.10 Natural Gas

9.0 SAMPLING AND ANALYSIS
9.1 Sample Containers Preservations and Holding Times
9.2 Periodic Performance Testing
9.3 Discharge Effluent Limits
9.4 Air Monitoring Program
9.5 Analytical Methods and Detection Limits for Analysis

10.0 EQUIPMENT TROUBLESHOOTING
10.1 Alarm Responses
10.2 Equipment Troubleshooting
10.2.1 Sand Filtration
10.2.2 Cartridge Filtration
10.2.3 UV/Oxidation
10.2.4 Programmable Logic Controller (PLC)
10.3 Special Maintenance Procedures
10.3.1 Chemical Spill – Operational Response
10.3.2 Chemical Handling
10.3.3 Chemical Usage Tracking
10.3.4 Vapor Monitoring
10.3.5 Equipment Cleaning

11.0 AMENDMENTS AND MODIFICATIONS

APPENDIX I

Cost Estimate

New Bedford Harbor Superfund Site
WTP Cost Estimate

ID #	ITEM DESCRIPTION	QUANTITY	UNIT	COSTS	TOTAL
1	***Work Package Development (sum of all subitems)***				**$93,000.00**
1A	Pre-engineered Building	1	job	$12,000.00	$12,000.00
1B	Mechanical Subcontractor	1	job	$12,000.00	$12,000.00
1C	Electrical Subcontractor	1	job	$12,000.00	$12,000.00
1D	Filitration Systems	1	job	$9,000.00	$9,000.00
1E	UV/Oxidation System	1	job	$9,000.00	$9,000.00
1F	Pumps	1	job	$9,000.00	$9,000.00
1G	Motor Control Center and Process Logic Controller	1	job	$9,000.00	$9,000.00
1H	Operation and Maintenance	1	job	$12,000.00	$12,000.00
1I	Laboratory Analysis	1	job	$9,000.00	$9,000.00
2	***Existing WTP Upgrade (sum of all subitems)***				**$98,000.00**
	RF Admittance Level Probe	1	job	$3,000.00	$3,000.00
	PID Level Controller	1	job	$2,000.00	$2,000.00
	Two Variable Speed Drives	1	job	$16,000.00	$16,000.00
	Two 10 hp pumps with motors listed for VSD duty	1	job	$50,000.00	$50,000.00
	PID Flow Controller	1	job	$3,000.00	$3,000.00
	Labor (300 hrs @ $80/hr)	1	job	$24,000.00	$24,000.00
3	***New WTP Construction (sum of all subitems)***				***$4,558,000.00***
3A	***Outside WTP (sum of all subitems)***				***$885,000.00***
3A1	CDF Pumping Stations	4	job	80,000.00	$320,000.00
3A2	Floating Pipe	1	job	50,000.00	$50,000.00
3A3	Chemical Addition Building and Equipment	1	job	75,000.00	$75,000.00
3A4	Cell 2 Pump Station	1	job	80,000.00	$80,000.00
3A5	Hydrogen Peroxide Building/Tank	1	job	75,000.00	$75,000.00
3A6	Yard Piping and Valves	1	job	225,000.00	$225,000.00
3A7	Electrical Wiring, Conduit and Connections	1	job	60,000.00	$60,000.00
3B	***Inside WTP (sum of all subitems)***				***$3,673,000.00***
3B1	***Structural (sum of all subitems)***				***$230,000.00***
3B1.1	Excvavation & Backfill of WTP	1	job	70,000.00	$70,000.00
3B1.2	Foundation	1	job	100,000.00	$100,000.00
3B1.3	Pre-Engineered Metal Building (Furnish & Erect)	1	job	165,000.00	$165,000.00
3B1.4	Reinforcing Steel	1	job	15,000.00	$15,000.00
3B1.5	Concrete Pads and Grouting	1	job	50,000.00	$50,000.00
3B2	***Process Equipment (sum of all subitems)***				***$2,299,000.00***
3B2.1	Primary Multimedia Filtration	3	ea	120,000.00	$360,000.00
3B2.2	EQ Tank	3	ea	6,000.00	$18,000.00
3B2.3	UV/Ox Feed Pumps	3	sets of 2	50,000.00	$150,000.00
3B2.4	Polishing Cartridge Filters	3	sets of 2	60,000.00	$180,000.00
3B2.5	UV/Ox System	3	ea	350,000.00	$1,050,000.00
3B2.6	Air Compressor	1	ea	10,000.00	$10,000.00
3B2.7	Composite Sampler	1	ea	6,000.00	$6,000.00
3B2.8	Other Piping and Valves	1	ls	125,000.00	$125,000.00
3B2.9	Receive, Unload, Install & Test Process Equipment	1	job	400,000.00	$400,000.00
3B3	***Electrical Systems (sum of all subitems)***				***$1,068,000.00***
3B3.1	Programable Logic Controller	1	ea	20,000.00	$20,000.00
3B3.2	Motor Control Center	1	job	35,000.00	$35,000.00
3B3.3	Variable Speed Controllers	1	job	10,000.00	$10,000.00

New Bedford Harbor Superfund Site
WTP Cost Estimate

ID #	ITEM DESCRIPTION	QUANTITY	UNIT	COSTS	TOTAL
3B3.4	Destop Computer	1	ea	3,000.00	$3,000.00
3B3.5	Other electrical equipment, materials, installation	1	job	1,000,000.00	$1,000,000.00
3B4	***Building Systems (sum of all subitems)***				***$76,000.00***
3B4.1	Backflow Preventers	1	ls	6,000.00	$6,000.00
3B4.2	HVAC Units	1	ls	30,000.00	$30,000.00
3B4.3	Fire Detection/Protection System	1	job	25,000.00	$25,000.00
3B4.4	Security System	1	job	15,000.00	$15,000.00
4	***WTP Operation & Maintenance (Per Year) (sum of all subitems)***				***$3,320,000.00***
4A	***Startup & Operations (sum of all subitems)***				***$915,000.00***
4A1	O&M Manual Development	1	job	80,000.00	$80,000.00
4A2	Testing and Shakedown	1	job	50,000.00	$50,000.00
4A3	Plant Operators	1	ls	750,000.00	$750,000.00
4A4	Systems Maintenance & Inspections	1	ls	35,000.00	$35,000.00
4B	***Utilities (sum of all subitems)***				***$1,534,000.00***
4B1	Electricity	1	ls	1,500,000.00	$1,500,000.00
4B2	Water & Sewer	1	ls	30,000.00	$30,000.00
4B3	Telephone	1	ls	2,000.00	$2,000.00
4B4	City Water & Sewer Testing	1	ls	2,000.00	$2,000.00
4C	***Supplies (sum of all subitems)***				***$630,000.00***
4C1	Treatment Chemicals	1	ls	350,000.00	$350,000.00
4C2	Spare Parts and Tools	1	ls	15,000.00	$15,000.00
4C3	Polishing Filters	1	ls	90,000.00	$90,000.00
4C4	UV Lamps and Tubes	1	ls	110,000.00	$110,000.00
4C5	H&S Equipment	1	ls	30,000.00	$30,000.00
4C6	Laboratory Equipment	1	ls	20,000.00	$20,000.00
4C7	Building Maintenance Materials	1	ls	10,000.00	$10,000.00
4C8	Office Supplies	1	ls	5,000.00	$5,000.00
4D	***Sampling and Analysis (sum of all subitems)***				***$110,000.00***
4D1	Laboratory Support	1	job	30,000.00	$30,000.00
4D2	Effluent Permit Sampling	1	ls	50,000.00	$50,000.00
4D3	Plant Performance Sampling	1	ls	25,000.00	$25,000.00
4D4	Waste Disposal Sampling & Testing	1	ls	5,000.00	$5,000.00
4E	***Record Keeping and Reporting (sum of all subitems)***				***$51,000.00***
4E1	Monthly Permit Reports	1	job	36,000.00	$36,000.00
4E2	Quarterly Status Reports	1	job	15,000.00	$15,000.00
4F	***Improvements and Upgrades***	***1***	***ls***	***80,000.00***	***$80,000.00***
				SUBTOTAL	***$8,069,000.00***
			Contingency (20%)		**$1,613,800.00**
				TOTAL	**$9,682,800.00**

Cost Estimate Details

ID#	ITEM DESCRIPTION
1	**Work Package Development (sum of all subitems)**
1A	Engineering and procurement effort to develop a work package for the procurement of a pre-engineered building including excavation, concrete, backfill materials, the pre-engineered building(s), foundation construction, sump construction, and exhaust fans.
1B	Engineering and procurement effort to develop a work package for the procurement of a Mechanical Subcontractor including piping and equipment installation, instrumentation and controls, floating pipe, process tanks(polishing filter sumps, hydrogen peroxide storage tank), and alum/polymer chemical feed systems.
1C	Engineering and procurement effort to develop a work package for the procurement of a Electrical Subcontractor including the site utilities, process wiring, lighting, heating and cooling systems, and a security system
1D	Engineering and procurement effort to develop a work package for the procurement of a Filtration System including the sand filter, cartridge filters, and the air compressors.
1E	Engineering and procurement effort to develop a work package for the procurement of a UV/Oxidation System and a hydrogen peroxide feed system.
1F	Engineering and procurement effort to develop a work package for the procurement of all the process pumps.
1G	Engineering and procurement effort to develop a work package for the procurement of a Motor Control Center and a Programmable Logic Controller.
1H	Engineering and procurement effort to develop a work package for the procurement for the operation and maintenance of the treatment system.
1I	Engineering and procurement effort to develop a work package for the procurement of laboratory analysis.
3	**New WTP Construction (sum of all subitems)**
3A	**Outside WTP**
3A1	Pumping station located at each of the 4 CDFs for pumping process water to cell 1.
3A2	Floating 10" HDPE piping used to transport the water from the CDFs to cell 1.
3A3	Pumping station to pump process water from cell 2 to WTP
3A4	Pump house containing the necessary chemical feed systems to add alum to the process water prior to entering cell 1.

Cost Estimate Details

3A5	Cost of constructing a building for a hydrogen peroxide tank, with electricity and a heating system installed.
3A6	Other miscellaneous piping and valves involved in transporting the water from the CDFs through cell 1 and to the WTP.
3A7	Miscellaneous electrical equipment located outside he WTP.
3B	**Inside WTP**
3B1	**Structure**
3B1.1	WTP site preparation including site excavation and backfill.
3B1.2	Concrete slab foundation for the new WTP.
3B1.3	Steel strut used to secure piping and electrical equipment within the WTP.
3B1.4	Concrete pads and grouting for the process equipment.
3B2	**Process Equipment**
3B2.1	Primary multimedia filtration system.
3B2.2	Holding tank for the process water prior to entering the polishing filter and UV/Ox system.
3B2.3	Feed pumps for pumping process water from holding tank through polishing filters and UV/OX System
3B2.4	Cartridge type filtration unit.
3B2.5	UV/Oxidation System
3B2.6	Air compressor for operating pneutomic valves and equipment.
3B3	**Electrical systems**
3B3.1	Programmable logic control system which will be used to control the process system.
3B3.2	The Motor Control Center containing the electrical equipment for the process system.
3B3.3	Variable speed drives capable of controlling cell2 pumps as well as the polishing filter and UV/Ox feed \ pumps.
3B3.4	Desktop computer used as an operator interface to control the WTP.
3B3.5	Other miscellaneous electrical equipment within the WTP.
	Composite sampler for colecting effluent samples prior to discharge.
3B4	**Building Systems**
3B4.1	A backflow preventer is necessary to prevent the flow of water back to the city water supply.

Cost Estimate Details

3B4.2	The HVAC or heating, venting and air conditioning units will supply heat, air conditioning and ventilation to the water treatment plant.
3B4.3	A fire detection/protection system including smoke and heat detectors as well as a sprinkler system.
3B4.4	An alarm system to prevent entry of unauthorized persons.
4	**WTP Operation and Maintenance (per year)**
4A	**Startup & Operation**
4A1	Development of a WTP Operation and Maintenance manual.
4A2	The initial period for testing and troubleshooting prior to operating the WTP at full capacity.
4A3	Labor cost for two full time operators.
4A4	Labor cost for a system specialist to repair, perform equipment maintenance, or plant inspections.
4B	**Utilities**
4B1	Electrical power cost.
4B2	Water and sewage costs in the plant.
4B3	Telephone costs in the plant.
4B4	Any necessary testing of the water and sewer utilities.
4C	**Supplies**
4C1	Treatment chemicals which may include alum or an algaecide.
4C2	Spare parts and tools for use in the WTP.
4C3	Replacement cartridges for the polishing filter.
4C4	Replacement of UV lamps and tubes for the UV/Oxidation system.
4C5	Health and safety equipment including ppe, fire estinguishers, first aid kits, instrumentation, etc.
4C6	Laboratory equipment such as turbidity meters, pH meters, jar test apparatus, etc.
4C7	Materials used to maintain the WTP building systems.
4C8	WTP office supplies.
4D	**Sampling and Analysis**
4D1	Chemistry review of analytical data.
4D2	Permit sampling, necessary to characterize the WTP effluent.

Cost Estimate Details

4D3	Additional sampling necessary to characterize WTP performance.
4D4	Additional sampling to characterize any wastes that may be generated at the WTP.
4E	**Record Keeping and Reporting**
4E1	Preparation of reports summarizing the effluent quality on a monthly basis.
4E2	Preparation of reports summarizing the WTP performance on a quarterly basis.
4F	***Improvements and Upgrades***
4F1	Funding for potential changes in the future.

APPENDIX J

Draft Submittal Register

PRELIMINARY SUBMITTAL REGISTER FOR NEW BEDFORD HARBOR WTP (TASK ORDER #17)

Subtask No.	Submittal Description (X = New Submittal)	Transmittal No.	4025 Submittal Date	Approval Type	Actual Approval Date	Govt. Action Code	Remarks
	PROJECT MANAGEMENT						
	WTP Design Work Plan Amendment			GA			
	WTP Design Estimate			N/A			
	WTP Design Schedule						
	WTP Construction Work Plan			GA			
	WTP Construction Schedule			N/A			
	WTP Construction Estimate			N/A			
	TECHNICAL DOCUMENTS						
	30% Design			GA			
	90 % Design Interim Submittal			GA			
	90 % Design 2nd Interim Submittal			GA			
	90% Design Submittal			GA			
	100% Design Submittal			GA			
	Final Check Plans & Specifications			GA			
	Final Approval Plans & Specifications			GA			
	PLAN SUBMITTAL AMENDMENTS						
	SSHP			GA			
	CDAP			GA			
	CQCP			GA			
	RCP			LTR			
	WORK PACKAGES						
	Work Package #1: Pre-Engineered Building			FIO			
	Work Package #2: Mechanical Subcontractor			FIO			
	Work Package #3: Electrical Subcontractor			FIO			
	Work Package #4: Filtration Systems			FIO			
	Work Package #5: UV/Oxidation System			FIO			
	Work Package #6: Pumps			FIO			
	Work Package #7: Motor Control Center/PLC			FIO			
	Work Package #8: Operation and Manitenance			FIO			
	Work Package #9: Laboratory			FIO			
	Specification Section 01010: Summary of Work						
	Warranties, performance, and payment bonds, insurance, and federal, state, and local permits.			FIO			
	Permits and license applications.			FIO			

PRELIMINARY SUBMITTAL REGISTER FOR NEW BEDFORD HARBOR WTP (TASK ORDER #17)

Subtask No.	Submittal Description (X = New Submittal)	Transmittal No.	4025 Submittal Date	Approval Type	Actual Approval Date	Govt. Action Code	Remarks
	Specification Section 01050 : Field Engineering						
	Submit name, address, telephone number and qualifications of the surveyor, crew chief, superintendent, and all other personnel assigned to perform surveying on this project			GA			
	Verification of accuracy of survey work on site. (Copies of or original field log books)			FIO			
	Project Record Documents			FIO			
	Calibration Certificates			GA			
	Specification Section 01700: Project Closeout						
	Project Record Drawings			FIO			
	Notice of Substantial Completion			FIO			
	Notice of Completion			GA			
	Final Project Record Documents			FIO			
	Decontamination Certification			FIO			
	Evidence of Final Payment for Construction Utility Services			FIO			
	Final Invoice			GA			
	Division 2: SITE WORK						
	Specification Section 02210: Grading						
	Field Testing Control Statement			FIO			
	Field Testing Control Clean Borrow Materials Reports			FIO			
	Specification Section 02221: Excavation, Filling, and Backfilling for Buildings						
	Field Density Test Results			FIO			
	Specification Section 02222: Excavation, Trenching, and Backfilling for Utilities Systems						
	Field Density Test Reports			FIO			
	Specification Section 02445: Bumper and Guard Posts						
	Specification Section 02831: Chain Link Fence						
	Manufacturer Certification that the chain link fence and component materials meet the specified requirements.			FIO			
	Specification Section 02935: Turf						

PRELIMINARY SUBMITTAL REGISTER FOR NEW BEDFORD HARBOR WTP (TASK ORDER #17)

Subtask No.	Submittal Description (X = New Submittal)	Transmittal No.	4025 Submittal Date	Approval Type	Actual Approval Date	Govt. Action Code	Remarks
	Manufacturer's literature for erosion control material			FIO			
	Seed Manufacturer's Data			FIO			
	Fertilizer Manufacturer's Data			FIO			
	Lime Manufacturer's Data			FIO			
	Laboratory Test Report on Topsoil			FIO			
	Division 3: CONCRETE						
	Specification Section 03050: Concrete, General						
	Request to Use External Vibrators			GA			
	Specification Section 03110: Concrete Formwork						
	Specification Section 03200: Concrete Reinforcement						
	Mill Test Certificates			FIO			
	Specification Section 03310: Cast-in-Place Structural Concrete						
	Concrete Mix Design			FIO			
	Mill Certificates, Sieve Analyses, and Test Results			FIO			
	Manufacturer's Product Data for Curing Compound			FIO			
	Batch Plant Requirements			FIO			
	Written Notification of each Concrete Placement			GA			
	Request for Use of Type III Cement			GA			
	Detailed Procedure for Concrete Repairs			FIO			
	Q.C. Testing for Concrete			FIO			
	Division 5: METALS						
	Specification Section 05500. Miscellaneous Metals						
	Detail Drawings for Miscellaneous metal Items			FIO			
	Division 7: THERMAL & MOISTURE PROTECTION						
	Specification Section 07920: Joint Sealing						
	Manufacturer's Material Data for Backing			FIO			
	Manufacturer's Material Data for Bond Breaker			FIO			
	Manufacturer's Material Data for Sealant			FIO			
	Material Certificate for Sealant			FIO			
	Division 8: DOORS AND WINDOWS						
	Specification Section 08120: Aluminum Doors and frames						

PRELIMINARY SUBMITTAL REGISTER FOR NEW BEDFORD HARBOR WTP (TASK ORDER #17)

Subtask No.	Submittal Description (X = New Submittal)	Transmittal No.	4025 Submittal Date	Approval Type	Actual Approval Date	Govt. Action Code	Remarks
	Manufacturer's Catalog Data			FIO			
	Manufacturer's Installation Instructions			FIO			
	Laboratory test reports for full-glazed doors			FIO			
	Specification Section 08360: Rolling Door						
	Manufacturer's Catlog Data			FIO			
	O&M Instructions			FIO			
	Manufacturer's Installation Instructions			FIO			
	Specification Section 08700: Hardware: Builder's (General Purpose)						
	Manufacturer's Descriptive Data			FIO			
	Specification Section 08810: Glass and Glazing						
	Manufacturer's Installation Instructions			FIO			
	Division 9: FINISHES						
	Specification Section 09900: Painting						
	Certificates of Compliance for lead content			FIO			
	Test Reports			FIO			
	Manufacturer's Application Instructions			FIO			
	Samples			FIO			
	Division 10: SPECIALTIES						
	Specification Section 10440: Interior Signage						
	Manufacturer's Interior Signage			FIO			
	Specification Section 10522: Portable Fire Extinguishers						
	MFG. Data for Fire Extinguishers			FIO			
	MFG. Data for Adjuncts			FIO			
	MFG. Data for Wall Brackets			FIO			
	MFG. Data for Replacement Parts			FIO			
	Shop Drawings for Fire Extinguishers			FIO			
	Shop Drawings for Adjuncts			FIO			
	Shop Drawings for Wall Brackets			FIO			
	Certificates of Compliance			FIO			
	Division 11: EQUIPMENT						
	Specification Section 11010: Mechanical Equipment and Installation						
	Specification Section 11200: Combination Steam Cleaner and Pressure Washer						
	Manufacturer's Data			FIO			
	O&M Instructions			FIO			
	Soap Solution Data			FIO			

PRELIMINARY SUBMITTAL REGISTER FOR NEW BEDFORD HARBOR WTP (TASK ORDER #17)

Subtask No.	Submittal Description (X = New Submittal)	Transmittal No.	4025 Submittal Date	Approval Type	Actual Approval Date	Govt. Action Code	Remarks
	Specification Section 11310: Pumps						
	Pump System Manufacturer's Data			FIO			
	Spare Parts Manufacturer's Data			FIO			
	Pump System Drawings			FIO			
	Performance Test Reports			FIO			
	Pump System Operation and Maintenance Manual			FIO			
	Specification Section 11311: Metering Pumps						
	Pump System Manufacturer's Data			FIO			
	Spare Parts Manufacturer's Data			FIO			
	Pump System Drawings			FIO			
	Performance Test Reports			FIO			
	Pump System Operation and Maintenance Manual			FIO			
	Specification Section 11315: Tanks						
	Material Data			GA			
	Venting and Pressure Relief Calculations			FIO			
	Tank Detail Drawings			GA			
	Tank Installation Instructions			FIO			
	Tank QC and Testing Procedures			FIO			
	Tank Unloading and Installation Instructions			FIO			
	Shop Inspection and Test Record Reports			FIO			
	Operation and Maintenance Manuals			FIO			
	Warranty Certificate			FIO			
	Specification Section 11345: Media Filtration						
	Mfg.'s Data for Filtration System			GA			
	Specifcation Section 11347: Chemical Addtion Systems						
	Mfg's Data for Chemical Feed Systems			FIO			
	Specification Section 11360: Air Compressor						
	Mfg's Data for Air Compressor			FIO			
	Specification Section 11523: Polishing Filtration						
	Mfg.'s Data for Filtration System			GA			
	Specification Section 11560: UV/Oxidation System						
	Mfg.'s Data for UV/Oxidation System			GA			
	Logic Diagram			FIO			
	Equipment Loading Diagram			FIO			
	Piping and Instrumentation Diagram			FIO			

PRELIMINARY SUBMITTAL REGISTER FOR NEW BEDFORD HARBOR WTP (TASK ORDER #17)

Subtask No.	Submittal Description (X = New Submittal)	Transmittal No.	4025 Submittal Date	Approval Type	Actual Approval Date	Govt. Action Code	Remarks
	Piping Drawings			FIO			
	Wiring Schematic			FIO			
	Shop or Field Testing Reports			FIO			
	Posted Operating Instructions			FIO			
	Operation and Maintenance Manual			FIO			
	Specification Section 11630: Composite Wastewater Sampler						
	Mfg's Data			FIO			
	Specification Section 11660: In-Line Static Mixer						
	Mfg's Data			FIO			
	Division 12-15: SPECIAL CONSTRUCTION/ MECHANICAL						
	Specification Section 13120: Pre- Engineered Building Systems						
	Design Analysis Data			GA			
	Building System Details, Design, and Erection Drawings			GA			
	Manufacturer's Qualifications Statements			FIO			
	Building Erector's Qualifications and Experience Statements			FIO			
	Manufacturer's Building System Certificate and Mill Certificates			FIO			
	Exterior Wall Covering Sample			GA			
	Roof Covering Sample			GA			
	Factory Color Finish Sample			GA			
	Specification Section 15011: Mechanical, General Requirements						
	Certified List of Qualified Service Permanent Organizations			FIO			
	Specification Section 15060: Piping and Valves						
	Piping and Valve Manufacturer's Material and Equipment Data			FIO			
	Specification Section 15140: Hangers and Supports						
	Manufacturer's Materials and Equipment Data			FIO			
	Location of Hangers and Supports (Drawings)			FIO			
	Specification Section 15620: Heating System: Electrical Unit-Heaters						
	Mfg.'s Data for Electric Heaters			GA			
	Electric Heaters Operation and Maintenance Manual			FIO			

PRELIMINARY SUBMITTAL REGISTER FOR NEW BEDFORD HARBOR WTP (TASK ORDER #17)

Subtask No.	Submittal Description (X = New Submittal)	Transmittal No.	4025 Submittal Date	Approval Type	Actual Approval Date	Govt. Action Code	Remarks
	Specification Section 15850: Exhaust Fans						
	Manufacturer's Equipment Data			FIO			
	Exhaust Fans Operation and Maintenance Manual			FIO			
	Division 16: ELECTRICAL						
	Specification Section 16118: Underground Conduit Duct Bank						
	Record Drawings			FIO			
	Specification Section 16402: Interior Wiring Systems						
	Mfg.'s Data for Switches			GA			
	Mfg.'s Data for Wire and Cables			GA			
	Mfg.'s Data for Variable Frequency Drives			GA			
	Mfg.'s Data for Circuit Breakers			FIO			
	Mfg.'s Data for Transformers			FIO			
	Mfg.'s Data for Motor Controllers			GA			
	Shop Drawings for Panelboards			GA			
	Shop Drawings for Motor Control Centers			GA			
	Specification Section 16723: Security Alarm Systems						
	Door Switches and control panel Catalog Data			FIO			
	Manufacturer's Performance data			FIO			
	Manufacturer's Wiring Diagram			FIO			
	Specification Section 16910: Flowmetering and Pressure Systems						
	Mfg.'s Data for Flow Meter			FIO			
	Mfg.'s Data for Flow Switches			FIO			
	Mfg.'s Data for Pressure Gauges			FIO			
	Specification Section 16925: Programmable Controllers (PLC)						
	Mfg.'s Data for Central Processor			GA			
	Mfg.'s Data for Peripheral Equipment			GA			
	PLC and Control Panel Drawings			GA			
	Specification Section 16962: Level Systems						
	Mfg.'s Data for Level Switches			FIO			
	Mfg.'s Data for Level Transmitters			FIO			
	Specification Section 16966: Anuunicators						
	Mfg.'s Data for Panel Features			FIO			

PRELIMINARY SUBMITTAL REGISTER FOR NEW BEDFORD HARBOR WTP (TASK ORDER #17)

Subtask No.	Submittal Description (X = New Submittal)	Transmittal No.	4025 Submittal Date	Approval Type	Actual Approval Date	Govt. Action Code	Remarks
	Specification Section 16980: Alarm Data Telemetering Systems						
	Mfg.'s Data for Autodialer			FIO			
	Mfg.'s Data for Battery Backup			GA			
	Shop Drawings for Autodialer			FIO			
	Dimensions of Accessories			GA			
	Specification Section 16992: Instrument Control Panels						
	Manufacturer's Catalog Data			FIO			
	Control Panel Features			FIO			
	Layout Dimensions			GA			
	Wiring Diagrams			FIO			
	Internal Equipment Layout			FIO			
	Specification Section 16995: Safety Monitoring Sensor / Analyzers						
	Manufacturer's Catalog Data			GA			
	Operation and Maintenance Manual			FIO			

NOTES: