SDMS DocID 000218341

Final Report:

Laboratory Testing Results: KPEG Treatment of New Bedford Soil

Work done for REM III Contract #68-01-7250

December 20, 1988

Galson Research Corporation

6601 Kirkville Road
East Syracuse, NY 13057

(315) 463-5160 (within NYS)
(800) PCBS-123 (outside NYS)

TABLE OF CONTENTS

Volume 1

Executive Summary 1

1. General Description of KPEG Treatment Technology 2
2. Description of Bench Testing 5
3. Pre-Treatment and Post-Treatment 7
4. *Results of Advance Testing* 8
5. Procedures for Documentation 12
6. Results of Bench Testing 13
   - 6.1. PCB Results 13
   - 6.2. Results of Reagent Recovery Study 15
   - 6.3. Results of Soil Washing Test 16
   - 6.4. Results of CLP Analysis 17
7. Effects of Varying Operating Parameters 19
8. Estimate of Full Scale Processing Cost 20
9. Process Optimization 23
10. Information Specific to KPEG Processing 24
    - 10.1. Destruction and Removal Efficiencies 24
    - 10.2. Toxicity of Reaction Products 25
    - 10.3. Reagent Residuals in Processed Soil 25
    - 10.4. Separation of Fine Grained Sediment from Reagent and Wash Water 26
    - 10.5. Effect of Water on KPEG Processing 26

Appendix

A. Data Sheets for Gallon Reactions
B. Results of CLP Analysis
C. Sample Log
D. *Analytical Spreadsheets*
E. Copies of Notebook Pages

Executive Summary

Two samples of sediment from New Bedford Harbor were used to test KPEG treatment for removal of PCB. The two samples were "low PCB" sediment containing 400 - 500 ppm PCB and "high PCB" sediment containing 6000 - 7500 ppm PCB. KPEG reduced the PCB concentration in the "low PCB' sediment to less than 1 ppm in 9 hours. It reduced the PCB concentration in the "high PCB" sediment to 4 ppm in 12 hours. Both reactions were carried out at 165°C.

Reagent recovery for reactions of New Bedford sediment was slightly greater than usual for a laboratory study, probably because the reaction size was greater than usual. In gallon size reactions with New Bedford Sediment, at least 75% of each reagent component was accounted for analytically. Most of the reagent components were recovered in the recovered reagent and the first wash. Recoveries of potassium hydroxide were unusually high for laboratory tests, indicating favorable results for full scale processing. Residual concentrations of reagents in treated soil are consistent with 98+% reagent recoveries.

In general, laboratory recovery of reagent is less than pilot test recoveries. In studies preceding treatment of the Bengart & Memel site, 98+% reagent recoveries were achieved in pilot tests. Since reagent recovery analysis was not done during lab testing for that site, data to compare with the pilot study results do not exist. In recent lab and pilot studies for another site with fine grained soil, reagent recoveries from pilot tests were 10 - 18% higher than they had been for lab tests. For example, the the average recovery for DMSO was 64% in the lab and 89% in the pilot. Based on the improvement in recovery seen at the other site, reagent recoveries for New Bedford sediment are expected to improve as the process is scaled up.

The cost for processing PCB contaminated soils at the New Bedford site is estimated at $80 to $104/ton of soil processed, depending on the volumes to be handled, cleanup levels desired and other factors. This cost compares favorably with other forms of permanent disposal, along with the natural safety advantages associated with closed system batch processing

This work was done under REM III Contract #68-01-7250

1. General Description of KPEG Treatment Technology

In KPEG soils processing, soil and reagent are mixed to form a slurry. The soil/reagent mixture is then heated to 30-180 °C with mixing until the PCBs in the soil decompose to lower toxicity, water soluble materials. At the end of the reaction, reagent is recovered and the soil is washed with at least two volumes of water. The decontaminated soil is then discharged, and the reagent and wash waters are recycled, as shown in the simplified process diagram below.

PROCESS DIAGRAM FOR APEG SOIL DECONTAMINATION

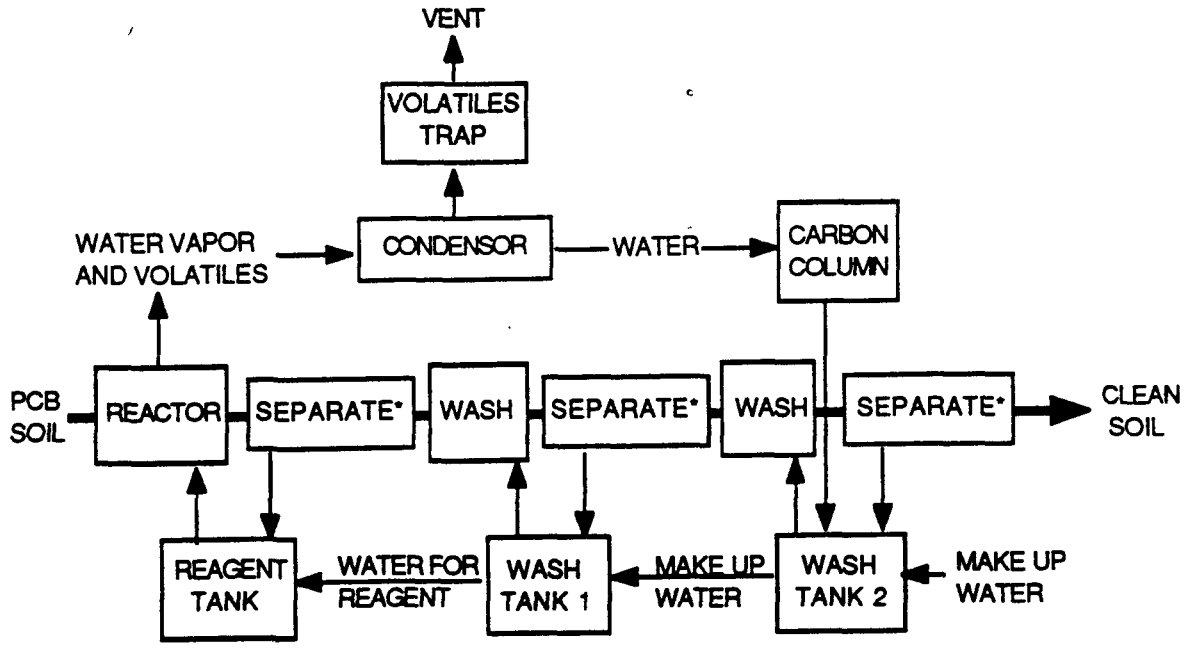

*SEPARATION BY PRESSURE FILTRATION, CENTRIFUGATION, OR SETTLING/DECANTATION

The following page is a more detailed process diagram and mass balance form for a single large reactor. A multiple reactor system would be used for the New Bedford Harbor site.

FULL SCALE PROCESS DIAGRAM

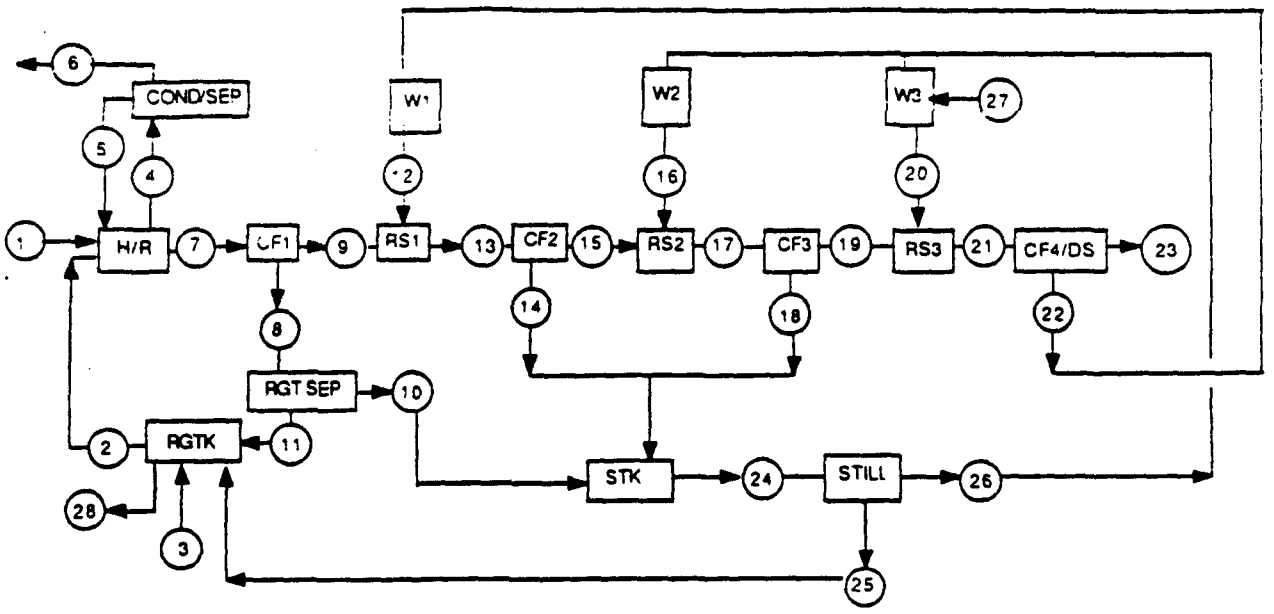

1. Contaminated soil into reactor
2. Reagent into reactor
3. Makeup reagent into reagent tank
4. Volatiles from reactor heatup
5. Water return
6. Hydrocarbons from separator
7. Soil/reagent slurry from reaction
8. Reagent decant from first centrifugation
9. Soil decant from first centrifugation
11. Water/reagent from decant to reagent tank
10. Water/reagent from decant to still
12. First wash water input
13. Soil/water slurry from first wash
14. Reagent/water decant from second centrifugation
15. Soil decant from second centrifugation
16. Second wash water input
17. Soil/water slurry from second wash
18. Reagent/water decant from third centrifugation
19. Soil decant from third centrifugation
20. Wash water input for third wash
21. Soil/water slurry from third wash
22. Water/reagent from 4th centrifugation
23. Decontaminated soil
24. Water/reagent feed to distillation system
25. Reagent from distillation system
26. Water from distillation system
27. Water/acid makeup to system
28. Salt blowdown from reagent tank

(#) Numbered process stream

H/R — Heatup/reaction step

COND/SEP — Vapor condensation/hydrocarbon separation

CF1, CF2, CF3 — 1st, 2nd, 3rd centrifuge steps

RGT SEP — Reagent separation

RGTK — Reagent tank

RS1, RS2, RS3 — 1st, 2nd, 3rd reslurry steps

W1, W2, W3 — Wash water tanks 1,2,3

STK — Distillation feed tank

STILL — Distillation system

CF4/DS — 4th centrifuge step/solids discharge

PRO-FORMA MASS BALANCE

Stream #	1	2	3	4	5	6	7	8	9	10	11	12	13	14	15	16	17	18	19	20	21	22	23	24	25	26	27	28
Description																												
Mass, thousand lbs	56.0	33.6	0.24	19.0	19.0	0.0	89.6	31.4	58.2	16.4	14.9	33.6	91.6	33.1	58.7	33.6	92.3	33.4	58.9	33.6	92.5	33.6	58.9	83.0	16.4	64.6	2.6	0.0
Klbs soil	44.8	0.0	0.00	0.0	0.0	0.0	44.8	0.0	44.8	0.0	0.0	0.0	44.8	0.0	44.8	0.0	44.8	0.0	44.8	0.0	44.8	0.0	44.8	0.0	0.0	0.0	0.0	0.0
Klbs water	11.2	5.6	0.00	18.8	18.8	0.0	18.8	11.8	5.0	6.2	5.6	33.3	38.4	26.9	11.5	33.6	45.1	31.8	13.5	33.6	47.1	33.0	14.1	64.6	0.0	64.6	2.6	0.0
Klbs KOH	0.0	5.6	0.05	0.0	0.0	0.0	5.6	3.9	1.7	2.1	1.9	0.0	1.7	1.2	0.5	0.0	0.5	0.4	0.2	0.0	0.2	0.1	0.0	3.6	3.6	0.0	0.0	0.0
Klbs PEG	0.0	5.6	0.05	0.0	0.0	0.0	5.6	3.9	1.7	2.1	1.9	0.1	1.8	1.3	0.5	0.0	0.5	0.4	0.2	0.0	0.2	0.1	0.0	3.7	3.7	0.0	0.0	0.0
Klbs TMH	0.0	5.6	0.05	0.0	0.0	0.0	5.6	3.9	1.7	2.1	1.9	0.1	1.8	1.3	0.5	0.0	0.5	0.4	0.2	0.0	0.2	0.1	0.0	3.7	3.7	0.0	0.0	0.0
Klbs DMSO	0.0	11.2	0.10	2.2	2.2	0.0	11.2	7.8	3.4	4.1	3.7	0.2	3.6	2.5	1.1	0.0	1.1	0.8	0.3	0.0	0.3	0.2	0.1	7.4	7.4	0.0	0.0	0.0
Klbs PCB products	0.0	0.0	0.00	0.0	0.0	0.0	0.0	0.0	0.0	0.0	0.0	0.0	0.0	0.0	0.0	0.0	0.0	0.0	0.0	0.0	0.0	0.0	0.0	0.0	0.0	0.0	0.0	0.0
Klbs PCB	0.0	0.0	0.00	0.0	0.0	0.0	0.0	0.0	0.0	0.0	0.0	0.0	0.0	0.0	0.0	0.0	0.0	0.0	0.0	0.0	0.0	0.0	0.0	0.0	0.0	0.0	0.0	0.0
Klbs HC misc	0.0	0.0	0.00	0.0	0.0	0.0	0.0	0.0	0.0	0.0	0.0	0.0	0.0	0.0	0.0	0.0	0.0	0.0	0.0	0.0	0.0	0.0	0.0	0.0	0.0	0.0	0.0	0.0
Klbs sulfuric acid	0.0	0.0	0.00	0.0	0.0	0.0	0.0	0.0	0.0	0.0	0.0	0.0	0.0	0.0	0.0	0.0	0.0	0.0	0.0	0.0	0.0	0.0	0.0	0.0	0.0	0.0	0.1	0.0

reagent/wash loading	60%
% Stage efficiency	70%
% soil carryover	0%
% Reagent loss	0.71%

Reagent formula	
% KOH	17%
% water	17%
% PEG	17%
% TMH	17%
% DMSO	33%

The reagent components for APEG processing include: a sulfoxide, e.g. sulfolane (SFLN) or dimethyl sulfoxide (DMSO); a glycol and/or capped glycol, e.g. polyethylene glycol 400 (PEG) and/or triethylene glycol methyl ether and higher homologs (TMH); solid or aqueous potassium hydroxide (KOH); and water. The glycol is reacted with KOH in the presence of DMSO to form an alkoxide. The alkoxide reacts with one of the chlorine atoms on the biphenyl ring to produce a glycol-biphenyl ether and potassium chloride. The sulfoxide acts as a extraction solvent and catalyst, increasing the overall rate of reaction. The reactions involved are shown in Figure 2.

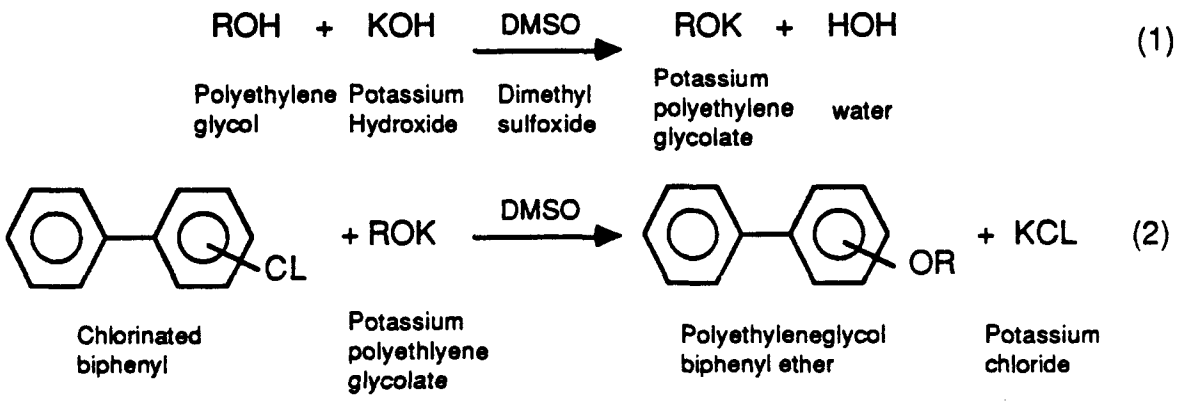

Figure 2. Reactions

Regardless of the processing scale, the reaction system is closed during the reaction to prevent release of materials to the environment. Water is distilled out of the reactor and collected in a condensate receiver. A trap is in line between the condensate receiver and the environment to collect any volatile compounds that are not condensed.

At the end of the reaction, reagent is recovered by decantation, filtration, or centrifugation and the soil is washed with water to remove the residual reagent. The number of water washes required may vary from one soil to another and must be determined through lab and pilot studies. The decontaminated soil is discharged, and the reagent can be recycled.

2. Description of Bench Testing

Bench testing consisted of demonstrating the effectiveness of KPEG treatment on two types of New Bedford soil, "low PCB" (<500 ppm) and "high PCB" (> 1000 ppm), and developing a cost estimate for full scale soil processing. The testing program was divided into two sections, advance testing in which the reaction parameters were investigated and set and bench testing in which the final parameters were demonstrated. In advance testing, GRC ran seven "small" reactions and one "gallon" reaction. The purpose of the small reactions was to develop the necessary analytical cleanup method for New Bedford soil and to establish the optimum reagent formulation, temperature, reaction time, and procedures for the gallon reactions. The small reactions were followed by a single 1 gallon reaction to test the use of large lab equipment in this process. (Normal laboratory reactions do not use such large amounts of material.) During Bench testing, two reactions (one for each soil) simulated processing under the finalized conditions and generated samples needed for further analysis. Table 1 lists all of the reactions done for this project.

Table 1. Reactions Done for New Bedford Project

Advance Testing				
#	size	soil	description	comment
1	small	low	reagent formulation with DMSO, 150°C	initial test
2	small	low	reagent formulation with Sulfolane, 150°C	DMSO was better
3	small	low	add vermiculite at 120°C, react at 150°C	faster reaction
4	small	low	add vermiculite at 150°C	no effect
5	small	high	like #3 plus replace KOH during reaction	inadequate
6	small	high	like #1 plus replace KOH during reaction	inadequate
7	small	high	triple initial KOH, increase temperature	successful
8	gallon	low	final conditions (3x KOH, 165°C)	equipment test
Bench Testing				
#	size	soil	description	comment
9	gallon	high	final conditions	process simulation
10	gallon	low	final conditions	process simulation

The laboratory scale reaction apparatus is shown in Figure 3. All components that come into contact with soil, reagent or condensate are glass except for the thermocouple probe. The bottom of the reactor is positioned in a thermostatically controlled oil bath. The oil bath with circulating heater and associated ring stands are set up in a fume hood. The condensate receiver and glass jars for reagent, soil, and washes are tared before starting the reaction. Soil, and reagents are weighed into the reactor bottom. The reactor is then clamped together and set up with all the accessories.

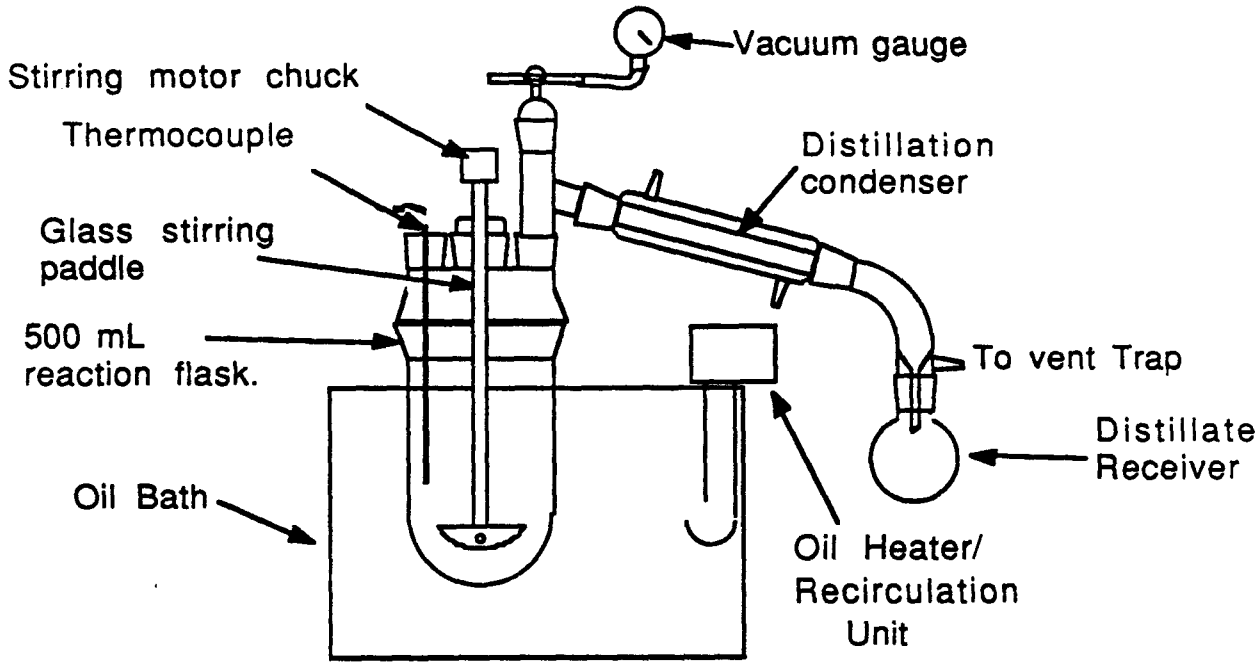

Figure 3. Lab Scale Soil Reactor

Reactions are timed from the start of heating. During heating, slight vacuum (<1" Hg) is maintained to encourage water distillation and prevent steam from escaping except through the vent trap. Water distills between 110 and 130°C. When the distillation is complete, the vacuum is turned off. Samples are taken throughout the reaction, about one per hour, and analyzed according to GRC's method for PCBs in soil.

After the PCB concentration in the soil has reached the desired "clean" level the reactor is cooled to about 100°C and water is added to prevent solidification of the KOH and restore the reagent to its original water content. The reactor is cooled to room temperature and the as much reagent as possible is recovered from the soil. Possible separation methods include settling/decantation, pressure filtration, and centrifugation. The recovered reagent is collected in its tared jar.

The soil is washed with water to remove residual reagent. The number of washes may be varied as desired. Each wash will have a volume similar to the volume of the reagent. Each wash is thoroughly mixed with the soil and then recovered from the soil by the same separation method that was used to recover the reagent. Each wash is is collected in its tared jar. When all the liquids are in their tared jars, the jars (and the condensate receiver) are re-weighed and mass recoveries are calculated.

In a laboratory study, recycling of the reagent is impractical because of the mass losses associated with the high surface to volume ratio of laboratory equipment. The reagents and washes are simply analyzed for reagent components so that the efficiency of reagent removal and the potential for reagent recycling on a larger scale can be evaluated.

3. Pre-Treatment and Post-Treatment

One of the great advantages of KPEG processing is that very little pre-treatment of soil is required. The main considerations for lab work were to prevent small rocks from breaking the reaction glassware and to verify that the soil contained enough PCB for demonstration purposes.

3.1. Soil Preparation and Analysis

Two batches of soil were received in gallon jars with teflon lined screw caps. Each batch was passed through a screen with 0.25 inch openings to remove any large rocks and homogenized as much as possible by hand mixing in a plastic pan. Both batches of soil had a distinct sulfurous odor and were completely saturated with water. No water was removed during the sieving and homogenizing procedures. Portions of each soil were collected for PCB analysis and percent moisture analysis and the soil was returned to its original containers. The results of the preliminary analyses are presented in Table 2.

Table 2. Results of Preliminary Analyses

Soil Batch	ppm PCB[a]	% moisture[b]
"High PCB"	6100	68
"Low PCB"	460	61

[a] mg total PCB per kg dry soil

[b] % moisture = 100 x (wet soil weight - dry soil weight) / wet soil weight

The soil samples were analyzed according to GRC's usual method except that decachlorobiphenyl (the usual recovery surrogate) was not added. Since DCB could have been present in the soil, use of DCB as a recovery surrogate was not appropriate for the initial analysis of the samples. These analyses showed that there was no detectable concentration of decachlorobiphenyl in the soil. Percent moisture was calculated by weighing wet soil in a tared beaker, drying the soil on a steam tray for a week, and re-weighing.

3.2. Post Treatment

The soil received no post treatment other than the soil washing steps described as a part of processing. In full scale processing, neutralization of the residual KOH will be necessary. The cost for neutralization has been included in the cost estimate.

4. Results of Advance Testing

Advance testing involved running a series of small reactions with the sediment. The purpose of the initial reaction series was to establish the reagent formulation and other handling parameters for the larger reactions requested by the client and to test GRC's analytical methods for this soil.

Four reactions were carried out using the "low PCB" soil. For these reactions 300 g of wet soil were mixed with 300 g of reagent. A 300 g portion of the wet sediment is roughly equivalent to 100 g of soil on a dry weight basis.

The first two reactions were done to compare dimethyl sulfoxide (DMSO) with sulfolane (SFLN) as the sulfoxide in the reagent formulation. The reagent formulation for both reactions was 1:1:2:2 PEG: TMH: sulfoxide: KOH(45%aqueous), and the reaction temperature was 150°C. The initial analysis of samples from these two reactions was not successful due to a large interfering peak in the middle of the PCB chromatogram. GC/MS analysis showed that the interfering compound was sulfur. An additional cleanup step - shaking the hexane extract with copper powder just before acid washing - was added to the analytical method. This procedure removed the sulfur from the hexane extracts without reducing recovery of PCBs. Enough samples were re-analyzed that an accurate reaction curve could be constructed for the first two reactions. All subsequent PCB analyses for this project included the copper cleanup step.

DMSO proved to be the better sulfoxide. Reagent containing DMSO reduced the PCB concentration to less than 10 ppm in 5.5 hours. Reagent containing sulfolane failed to reduce the PCB concentration to 10 ppm in 10 hours.

The second pair of reactions were done to test the effect of adding 1% vermiculite (1 g vermiculite/100 g soil) to the reaction slurry. Past experience has shown that for some soils, particularly those high in clay, vermiculite speeds up the reaction by improving the mixing in the reactor. In one of these reactions, the vermiculite was added when the reactor temperature was 120°C. In the other reaction, it was added when the temperature was 150°C. Addition of vermiculite at 120°C enhanced the reaction rate - the PCB concentration was reduced to less than 10 ppm in 4.5 hours compared with 5.5 hours for the reaction without vermiculite. Addition of vermiculite at 150°C did not change the initial reaction rate and seemed to slow the reaction after the 6th hour. Figure 4 shows the progress of the four initial reactions.

Figure 4. New Bedford Initial Reactions - Low PCB Soil

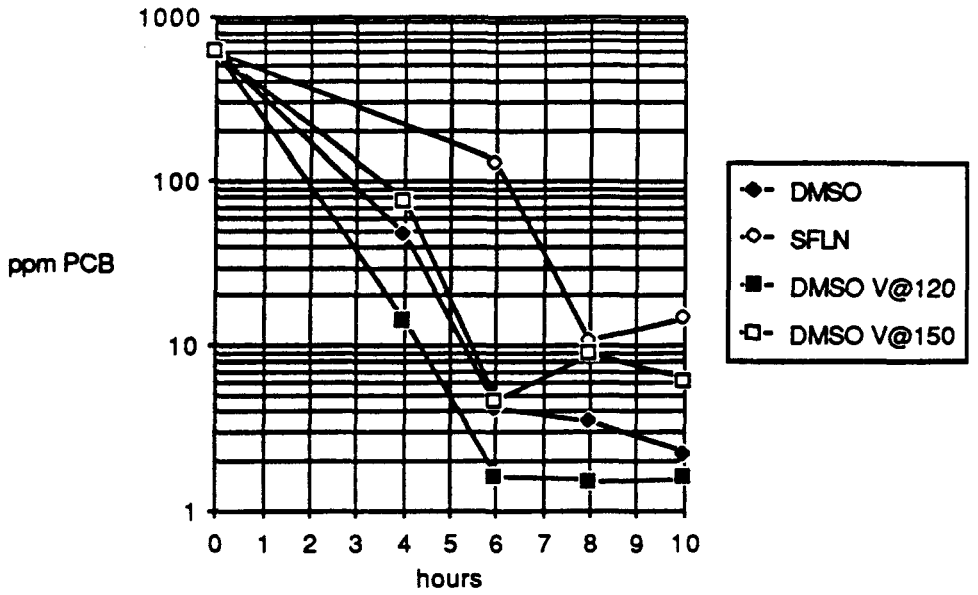

Similar reaction conditions were tried without success on the "high PCB" soil. In the pair of reactions done using the original reagent formulation (with and without vermiculite), the PCB concentration remained well above 50 ppm after 12 hours of reaction and the reaction curve seemed to level off. Vermiculite did not seem to have a significant impact on the reaction.

The reaction was stopped and the reagent was analyzed for PEG, TMH, DMSO, and KOH. All of the reagent components were still present in their original concentrations except KOH, which was reduced to 50% of its original concentration. Additional KOH was added to the reactor and heating was resumed. The PCB concentration was further reduced, but still failed to reach 10 ppm after 24 hours of reaction at 150°C. A new reaction was run using 3 times the usual amount of KOH with a reaction temperature maximum of 178°C. That reaction reduced the PCB concentration to less than 2 ppm within 6 hours, but 15% of the total PCB originally present ended up in the condensate along with some oil that distilled over. Figure 5 shows the results of the high PCB soil initial reactions.

Figure 5. New Bedford Initial Reactions - High PCB Soil

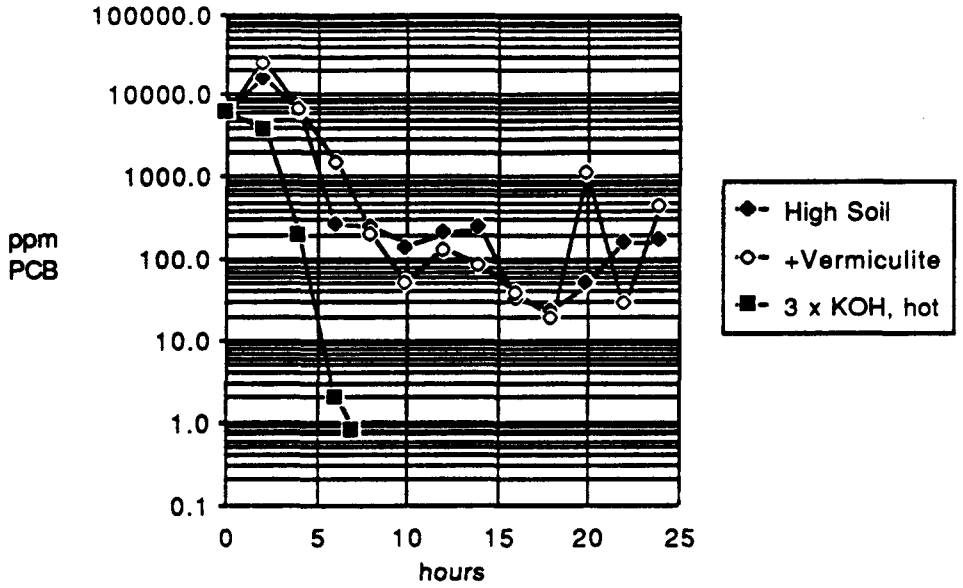

Long reactions were cooled, analyzed, fortified and reheated between 12th and 13th hour.

During this series of small reactions, GRC's analytical method was refined to meet the requirements of this sediment. Advance testing verified that pressure filtration is not useful for separating reagent and wash from this sediment. Centrifugation was selected as the separation method for all subsequent work. It was also determined that Vermiculite did not help the reaction rate for this sediment as it had for some other soils and that treatment of this sediment required much more KOH than was anticipated. Based on the PCB results of these initial reactions, the reagent formulation chosen for the larger reactions was 1:1:2:6 PEG:TMH:DMSO:KOH. Since increasing the reaction temperature to 178°C caused more rapid reaction with no damaging effects except increased distillation of PCB contaminated oil from the reactor, the gallon size reactions could be run as hot as the lab apparatus would allow.

As a final advance test, a "practice" one gallon reaction was done using the low PCB sediment. The original condenser system was found to be inadequate when foam containing reagent and soil was forced into the condensate receiver. As a result of that test, a second condenser and additional space for vapor expansion and condensation were added to the reaction apparatus. The additional glassware solved the problem and the final reactions proceeded smoothly. The following page is a diagram of the apparatus actually used for the gallon size reactions.

EQUIPMENT FOR "1 GALLON" SOIL REACTIONS

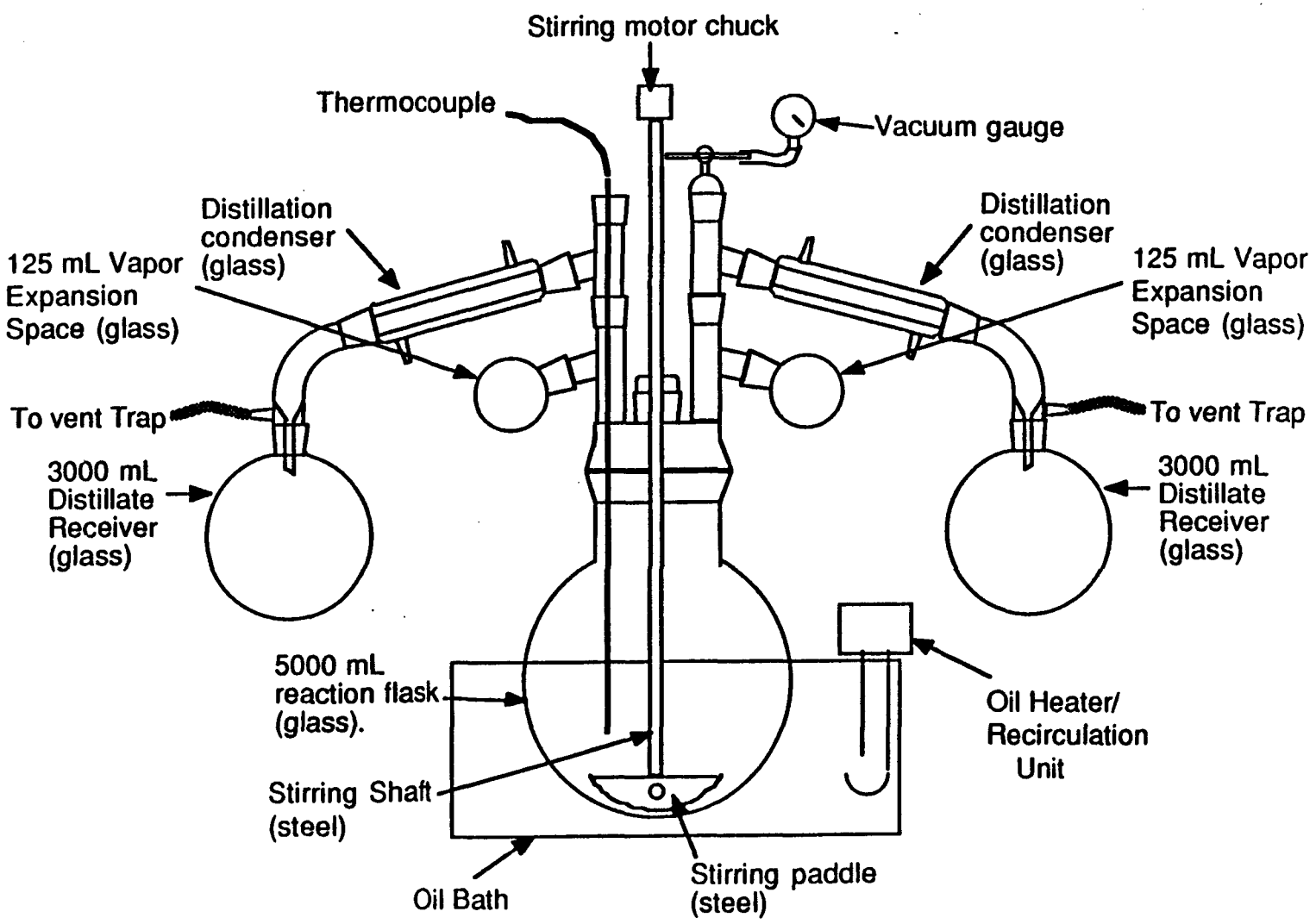

5. Procedures for Documentation

During all testing, GRC personnel entered observations and data into bound laboratory notebooks. Whenever samples are generated, sample numbers are assigned and recorded in the notebook along with other raw data, such as sample weights and brief descriptions of unusual procedures. Copies of the notebook pages are in Appendix E.

When samples were analyzed by GC or HPLC, peak areas, sample weights, extract volumes and injection volumes were typed into the various spreadsheets used for calculations. Copies of these spreadsheets are in Appendix D. The contents of the spreadsheets are explained in that appendix.

In addition, the sample log for this project contains a record of each sample collected, along with extraction and analysis dates and final results of each analysis. A copy of the sample log is in Appendix C.

6. Results of Bench Testing

The final reactions for this study were done using 6 lb of wet soil, 1 lb of PEG, 1 lb of TMH, 2 lb of DMSO and 3 lb of dry KOH at 165°C (±2°C). Complete data sheets for the reactions are presented in Appendix A.

6.1. PCB Results.

Total PCB in sediment results from monitoring the one gallon final reactions are shown in Figure 6.

Figure 6. New Bedford Gallon Reactions

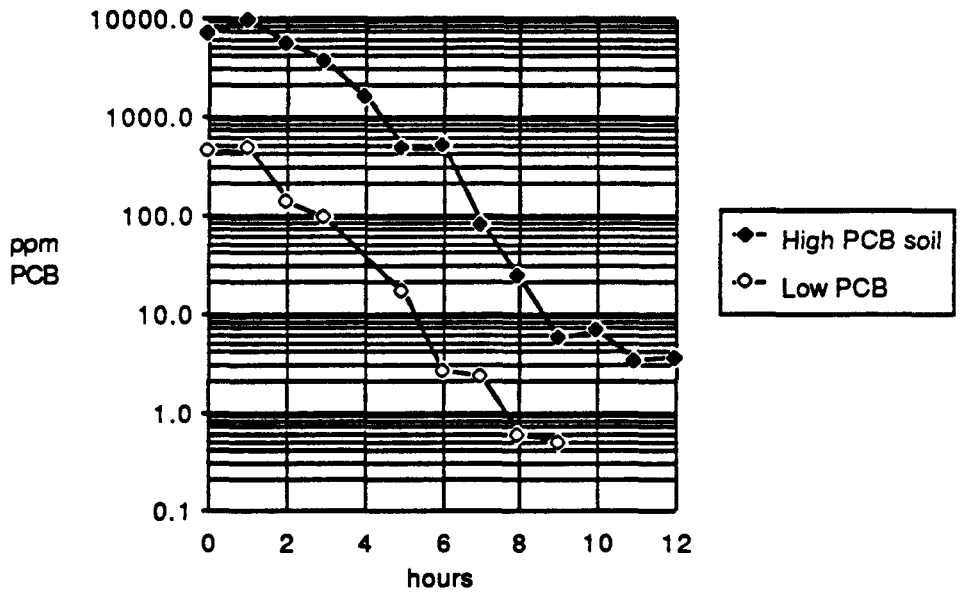

The PCB concentrations in the final dried soil agreed with the concentrations in the final monitoring samples. The concentration of PCB in the reagents was close to the concentration in the finished soils: 2.8 ppm for the high soil's reagent and 0.6 ppm for the low soil's reagent. The washes contained less than 1 ppm PCB. The low PCB concentrations in reagent and wash water will not interfere with recycling.

The concentrations of PCB in the condensates were several times the concentration of PCB in the finished soil. Transfer of PCB from the reactor to the condensate receiver probably occurs by co-distillation of PCBs with volatile organic compounds from the sediment or by droplet transfer. The condensate had two liquid phases. A small amount of organic liquid was seen floating on top of the condensate - not enough to collect and analyze separately. Analysis of a similar 2-phase condensate from the Bengart and Memel site showed that 99.98% of the PCB remained with the organic phase of the condensate even though there was only about a gallon of organic phase in a 55 gallon drum of condensate. Separation of the organic phase from the water will remove most of the PCBs and make the water suitable for recycling. If PCB removal is not adequate, it will be necessary to treat the

condensates with activated carbon to remove the PCBs before the water can be recycled or disposed of. The cost of such treatment is included in the cost estimate for soil processing.

Table 2 lists the samples analyzed for PCB for each reaction and gives concentrations by homolog (chlorination level).

Table 2. GRC's PCB Results from Gallon Reactions: By Homolog

PCB concentrations in ppm (µg/g sample) except traps. ND = Not Detected
Soil results, including monitoring samples, are calculated using the dry weight of the soil.
Detection limit /homolog - soil ,reagent, and condensate: 0.1 ppm, wash water :0.01 ppm, traps: 0.1 µg

REACTION WITH "HIGH PCB" SEDIMENT

Sample Description	total PCB	1-Cl	2-Cl	3-Cl	4-Cl	5-Cl	6-Cl	7-Cl	8-Cl
Initial Soil	7300	29	800	2400	2100	1100	730	88	4.3
Monitoring, 1 hour	9400	32	940	2900	3300	1700	500	42	1.5
Monitoring, 2 hour	5700	49	750	2200	1900	590	170	23	ND
Monitoring, 3 hour	3500	27	550	1700	1000	160	60	21	2.7
Monitoring, 4 hour	1600	28	510	720	250	11	32	5.8	1.3
Monitoring, 5 hour	480	16	280	160	12	1.1	5.4	0.3	ND
Monitoring, 6 hour	500	31	370	84	5.9	0.7	4.7	8	1.6
Monitoring, 7 hour	80	8.0	61	7.0	1.7	0.3	0.6	0.4	0.2
Monitoring, 8 hour	23	5.0	16	1.0	0.5	ND	ND	0.2	0.1
Monitoring, 9 hour	5.6	2.7	2.6	0.1	ND	ND	ND	ND	ND
Monitoring, 10 hour	6.8	5.0	1.5	ND	0.1	ND	ND	ND	ND
Monitoring, 11 hour	3.3	2.7	0.5	ND	ND	ND	ND	ND	ND
Monitoring, 12 hour	3.7	2.8	0.5	ND	ND	ND	0.2	ND	ND
Final Soil - 4/28/88	3.6*	*	0.6	0.3	1.8	0.6	0.1	ND	ND
Final Soil 9/9/88	2.8	1.3	1.1	0.1	ND	ND	ND	ND	ND
Reagent	2.8	2.4	0.08	0.07	0.16	0.05	ND	ND	ND
Wash 1	0.57	0.49	0.03	0.02	ND	ND	ND	0.03	ND
Wash 2	0.05	0.031	0.011	0.004	0.006	ND	ND	ND	ND
Condensate	330	3.4	120	160	42	5.5	4.0	2.1	0.8
Adsorbent Trap	2 .0µg	0.2 µg	0.5 µg	0.2 µg	0.2 µg	0.2 µg	0.5 µg	0.3 µg	ND

REACTION WITH "LOW PCB" SEDIMENT

Sample Description	total PCB	1-Cl	2-Cl	3-Cl	4-Cl	5-Cl	6-Cl	7-Cl	8-Cl
Initial Soil	440	0.2	49	140	140	56	41	3.2	0.4
Monitoring, 1 hour	460	4.6	51	150	150	57	34	1.0	0.2
Monitoring, 2 hour	130	0.7	20	56	46	8.0	1.8	0.4	0.8
Monitoring, 3 hour	92	0.5	18	46	26	1.1	0.1	0.2	ND
Monitoring, 5 hour	17	0.6	12	3.9	ND	ND	ND	ND	ND
Monitoring, 6 hour	2.7	0.2	2.3	0.2	ND	ND	ND	ND	ND
Monitoring, 7 hour	2.3	0.3	1.3	0.3	0.3	ND	0.1	ND	ND
Monitoring, 8 hour	0.6	0.2	0.3	ND	ND	ND	ND	ND	ND
Monitoring, 9 hour	0.5	0.2	0.1	ND	ND	ND	ND	ND	ND
Final Soil - 4/28/88	0.7*	*	0.2	ND	0.2	0.1	0.1	ND	ND
Final Soil - 9/9/88	0.5	0.1	0.3	ND	ND	ND	ND	ND	ND
Reagent	0.62	0.34	0.23	0.02	ND	ND	ND	0.02	ND
Wash 1	0.28	0.08	0.15	0.04	ND	ND	ND	ND	ND
Wash 2	0.15	ND	ND	ND	ND	ND	0.005	0.13	ND
Condensate	27	0.6	8.9	12	4.0	0.6	0.8	0.2	ND
Adsorbent Trap	ND	ND	ND	ND	ND	ND	ND	ND	ND

*Final soil results of 4/28/88 do not include monochlorobiphenyl.

6.2. Results of Reagent Recovery Study

The reagents, wash waters and soil recovered from processing were analyzed for the components of the reagent: PEG (polyethylene glycol with an average molecular weight of 400), TMH (triethylene glycol methyl ether and higher homologs), DMSO (dimethyl sulfoxide), and KOH (potassium hydroxide). The percentage of the original reagent input found in the various samples were calculated. The results are presented in Table 3.

Table 3. Reagent Recoveries as Percentage of Input

High PCB Soil	PEG	TMH	DMSO	KOH
Reagent	80.1	80.1	71.2	58.7
Wash 1	28.5	5.5	5.8	15.1
Wash 2	1.3	1.1	1.3	5.1
Soil Residual	0.9	0.3	0.3	1.1
Total % Recovery	110.8	87.0	78.6	80.0
Low PCB Soil	PEG	TMH	DMSO	KOH
Reagent	84.7	70.8	61.7	40.6
Wash 1	5.6	12.8	11.9	29.8
Wash 2	3.7	1.2	1.5	4.3
Soil Residual	0.2	0.4	0.4	1.2
Total % Recovery	94.2	85.2	75.5	75.9

Of the four reagent components, KOH washed out slowest, although overall recovery of KOH agreed with recovery of DMSO. The PEG recoveries are higher than those of TMH. Since PEG analysis has a large inherent error associated with it and tends to be biased toward false high results, the difference between PEG and TMH recoveries may not be significant. DMSO recoveries were lower than TMH and since the two analyses have a similar level of uncertainty, the difference is significant. DMSO is the most expensive component of the reagent, and it's lower recovery will have an impact on process cost.

During pilot studies for another site with fine grained soil, significant amounts of DMSO were found in the process condensate. PEG and TMH were found in the condensate only when reactor foaming carried reagent through the distillation line. Design changes for the full scale unit include measures to recover the DMSO from the condensate either by reverse osmosis or by fractional distillation (using a taller column than was used in the pilot reactor). If it is necessary to treat the condensate with activated carbon to remove PCBs, the carbon treatment should be done before DMSO recovery. PEG, TMH, and DMSO are water soluble and should not adsorb to carbon as strongly as PCB. They should not interfere with carbon treatment. Carbon treatment should be tested at the pilot stage to check the effect of reagent components and verify costs. Based on GRC's experience at the other site, it can be assumed that the missing DMSO from the New Bedford reactions is in the condensate. The missing KOH was probably consumed in side reactions with the soil.

In general, laboratory recovery of reagent is less than pilot test recoveries. In studies preceding treatment of the Bengart & Memel site, 98+% reagent recoveries were actually achieved in pilot tests. That soil was extremely rocky and does not resemble New Bedford sediment. Since reagent recovery analysis was not done during lab testing for that site, data to compare with the pilot study results do not exist.

In recent lab and pilot studies for a fine grained soil site, reagent recoveries from pilot tests were 10 - 18% higher than they had been for lab tests. For example, the the average recovery for DMSO was 64% in the lab and 89% in the pilot. The soil from the other site was not quite as finely divided as New Bedford sediment. It required centrifugation in the pilot study because it clogged filters similar to those used in the lab study. Based on the improvement in recovery seen at the other site, reagent recoveries for New Bedford sediment are expected to improve substantially as the process is scaled up.

6.3. Results of Soil Washing Test

Samples of the soil were taken after each stage of reagent removal and washing so that the number of washes required can be estimated. The results are in Table 4.

Table 4. Results of Soil Washing Test

	Concentrations in mg/g wet soil			
	PEG	TMH	DMSO	KOH
High PCB Soil				
After Reagent Drain	15.8	12.3	30.6	133
After Wash 1	18.3	4.1	15.3	71
After Wash 2	5.8	2.1	4.3	22
Low PCB Soil				
After Reagent Drain	2	7.6	18.2	162
After Wash 1	1.9	4.1	12.7	62
After Wash 2	1.4	2.3	4.4	21

Since PEG, TMH, and DMSO are relatively non-toxic and there are no guidelines set for allowable concentrations in soil or sediment, the major concern for soil washing is reducing the pH of the processed soil to an acceptable level. In order for the pH of the treated soil to be below 9, as required for the soil to be classified as non-caustic, the concentration of KOH in the soil would have to be less than 0.00056 mg/g (10^{-5} M). To achieve this low KOH concentration without neutralizing would require roughly 14 washes as shown in the Figure 7.

Figure 7. KOH Removal by Washing Alone

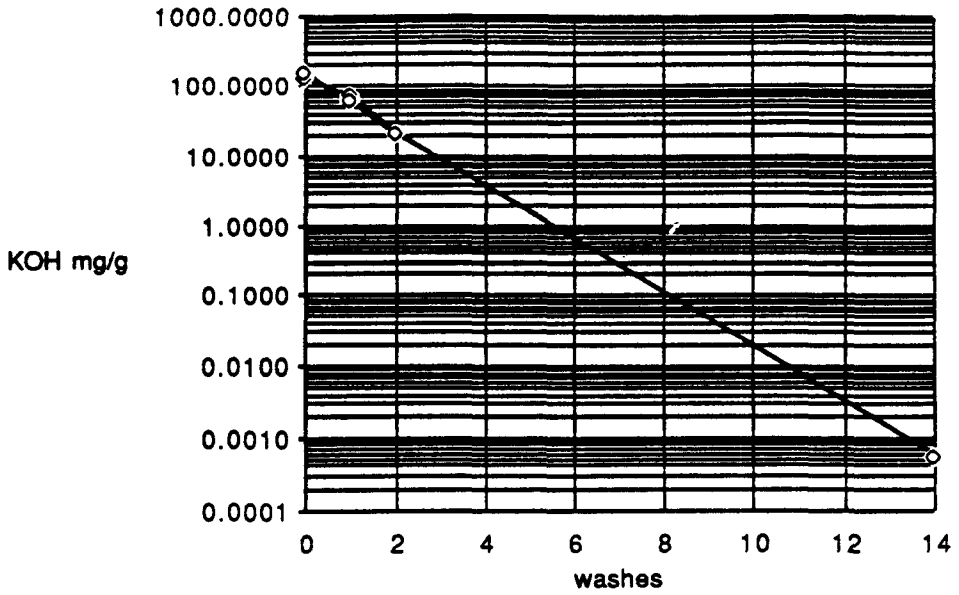

This large number of washes is impractical, and would probably be less costly to neutralize the KOH with acid to achieve the desired pH. the cost of such neutralization is included in the estimate of processing costs (see Section 8.)

The residual levels of PEG/TMH/DMSO indicate a potential recovery of 99.4-99.8% for a full scale operation.

6.4. Results of CLP Lab Analysis

In addition to the analyses done by GRC, samples from the gallon reactions were analyzed by another lab according to EPA's Contract Laboratory Protocol (CLP). A copy of the CLP results is in Appendix B. Some of the CLP analyses duplicated analyses done by GRC. The results of these analyses are shown in Table 5.

Table 5. Comparison of Galson and CLP Results

PCB results are in ppm (ug/g) based on dry soil.

	Untreated High Soil		Treated High Soil		
Analysis	Galson (GRC)	CLP	GRC 4/88	GRC 9/88	CLP
Total PCB	7300		*3.5	2.8	
Aroclor 1242		8500			ND
Aroclor 1254		3200			ND
Monochlorobiphenyl	29	47	*	1.3	110
Dichlorobiphenyl	800	1600	0.6	1.1	40
Trichlorobiphenyl	2400	4200	0.3	0.1	ND
Tetrachlorobiphenyl	2100	4600	1.8	ND	ND
Pentachlorobiphenyl	1100	2000	0.6	ND	ND
Hexachlorobiphenyl	730	440	0.1	ND	ND
% Solids	32	31.2	55		60

	Untreated Low Soil		Treated Low Soil		
Analysis	Galson (GRC)	CLP	GRC 4/88	GRC 9/88	CLP
Total PCB	440		*0.7	0.5	
Aroclor 1242		100			ND
Aroclor 1254		51			ND
Monochlorobiphenyl	0.2	ND	*	0.1	5.8
Dichlorobiphenyl	49	ND	0.2	0.3	ND
Trichlorobiphenyl	140	ND	ND	ND	ND
Tetrachlorobiphenyl	140	ND	0.2	ND	ND
Pentachlorobiphenyl	56	ND	0.1	ND	ND
Hexachlorobiphenyl	41	ND	0.1	ND	ND
% Solids	38.8	40.7	55		55

*Final soil results of 4/28 do not include monochlorobiphenyl

GRC'S results for monochlorobiphenyl (1-Cl) in the 4/28 analysis of the final soil were not reportable because the results did not pass QA criteria. These samples were be re-analyzed and the results are reported above.

The PCB results did not agree well between the two labs. It is interesting to note that the contract lab found more monochlorobiphenyl in the treated high soil than they found in the untreated high soil. Since converting more highly chlorinated PCBs to monochlorobiphenyl is highly unlikely in KPEG processing (see reactions in Section 1), the results reported for as monochlorobiphenyl by the contract lab are probably the result of interference. The contract lab also found pesticides in the reagent and wash waters from the gallon reactions. These pesticides were not found in the untreated soil and their chemical structures are unlikely to be generated during processing. The detection method for these "pesticides" was GC/ECD (gas chromatography with electron capture detection) and it is quite possible that the peaks that were quantified and reported as pesticides were actually interfering compounds. It is equally likely that some of the peaks reported as PCB were interfering compounds. One such compound might be the sulfur that GRC found in its advance testing reactions.

It is fairly normal to have some lab to lab variation in PCB results, especially when the matrix contains severe interferences as this sediment does. Contract Lab Protocols are designed to meet the widest variety of situations and are not specifically tailored to any one type of matrix. GRC has had a great deal of experience with PCB analysis in association with KPEG treatment and uses extraction and cleanup methods tailored to the demands of KPEG processing. GRC has also found, identified, and removed one of the sources or interference for this sediment. Because of GRC's greater analytical flexibility and the unusual problems in analyzing KPEG treated soils by "generic" methods, GRC's results are more likely to be accurate than the results from the contract lab.

7. Effects of Varying Operating Parameters

The series of small reactions done for this project indicated that KOH concentration is the most important parameter for the reagent formulation. Reactions of the high PCB soil done without adequate KOH failed to reduce the PCB concentrations to <10 ppm even after 24 hours of reaction. The reagent recovery results suggest that some of the KOH is consumed by the soil. The need for increased amounts of KOH will increase the cost of processing somewhat.

GRC's previous experience indicates that temperatures under 120°C result in very slow reactions because water is distilled out of the reaction slurry very slowly at that temperature. Generally, the reaction temperature should be as hot as possible while minimizing the loss of DMSO, which boils at 190°C. There was some loss of DMSO at 165°C, but it is uncertain whether the loss was due to volatilization or decomposition. Analysis of condensates for DMSO was not possible in this project because the entire condensate was needed for PCB analysis. DMSO has been found in condensates from other projects, but quantitative relationship between reaction temperature and DMSO distillation has not been established. Since condensate water will be recycled, DMSO in the condensate is not lost from the processing system and is ultimately returned to the reagent. For that reason, distillation of DMSO will not have a strong effect on process costs, but decomposition of DMSO will increase process costs. This is a factor that will need investigation at the pilot stage.

Heatup should be done as quickly as possible without causing violent boiling. GRC's experience with other soils indicates that slow heating results in sluggish reaction rates. The maximum possible heatup rate will be strongly dependent on the equipment design. For example, using two condensers (for the final gallon reactions) instead of one (as in the practice gallon reaction) facilitated control of the reaction so that more rapid heating could be done.

8. Estimate of Full Scale Processing Cost

Estimation of full scale processing costs from laboratory data requires the use of a great many assumptions about site conditions, processing rates, interest rates, maintenance costs etc. This is unavoidable, and accounts for much of the uncertainty in these numbers. The estimated costs of processing for the New Bedford site are divided into 3 sections; pre-treatment costs, reagent/waste disposal costs, and summary of costs for operation of both a 50,000 cubic yard site and a 500,000 cubic yard site.

8.1. Pre-treatment Costs

If it is assumed that the sediments for processing are to be dredged from the harbor, they will be accumulated and stockpiled at a much faster rate than they can be processed. The dredged material will presumably have a moisture content of about 60%, as did the samples supplied to GRC. Allowing this material to stand and drain should reduce this to an estimated 30% moisture level. This should not result in any additional costs over the existing costs of excavation. No additional pre-treatment is planned or required.

8.2 Reagent/Waste Disposal Costs

The reagent consumed by the process is essentially the reagent used to react the PCBs plus the reagent remaining in the soil following treatment. At an average concentration of 5000 ppm and a density of 3000 lb/cubic yard, each yard of soil would contain 15 lb of PCB. Assuming an average 50% chlorine level in the PCB, there would be about 7.5 lb chloride per cubic yard of soil. This 0.21 lb-mols of chloride would take approximately 8.2 bl of potassium for reaction, giving a consumption of 11.8 lb of KOH/cubic yard soil. At a cost of $.17/lb KOH, this gives a cost of $2.00/cubic yard soil for KOH consumed by the PCB.

Residual soil concentrations and associated costs for the reagent components are listed in the table below. The hydrochloric acid (HCl) listed is used to neutralize the residual KOH to form KCl (salt substitute) and water.

Component	mg/g	lb/cubic yard	$/lb reagent	$/cubic yard soil
PEG 400	1.4-5.8	4.2-17.4	0.61	2.56-10.61
TMH	2.1-2.3	6.3-6.9	0.57	3.59-3.93
DMSO	4.3-4.4	12.9-13.2	0.82	10.58-10.82
KOH	21-22	63-66	0.17	10.71-11.22
HCl		40-42	0.09	3.6-3.8
Total				31.04-40.38

As shown in the table above, the bulk of the residual reagent is inorganic salt, and it will probably not be possible to distinguish the KCl formed during processing from the KCl naturally occurring in the sea water saturating the untreated soil.

The remaining organics in the treated soil amount to less than 1% of the soil mass and are essentially non-toxic. Indeed, the glycols and sulfoxide (LD_{50} about 13,000 mg/kg) are three times less toxic than the NaCl present in the salt water (LD_{50} about 3500 mg/kg). The total cost of residual reagent in the soil plus the KOH used by the PCB comes to 33-43$/cubic yard of soil. A budget figure of $50/cubic yard of soil is used for purposes of calculation.

Waste disposal for this process is primarily the off-site disposal of any oils distilled from the soil during processing and the periodic removal and off-site incineration of accumulated salts and humic acids from the reagent recycle tank. The volume of such material is small, and a nominal figure of $10/ton soil is used for estimation purposes.

8.3 Operating Cost Summaries

The following table gives a summary of the assumptions and cost factors for a cleanup of 50,000 cubic yards of contaminated soil at the New Bedford site. Changes in any of these assumptions would give a change in the estimated processing costs.

ASSUMPTIONS		
Nominal processing rate, yards/batch	60	(double reactor unit)
estimated average cycle time, hours	8	(assumes 10 ppm cleanup goal)
processing hours/day	24	365 day operation
estimated % processing time	80%	
Average processing rate, yards/hour	6.00	yards/year= 52,560
depreciation, %/year	20%	
maintenance costs, % of capital/year	20%	
capital cost, $	$2400000	includes engineering and construction]
average soil moisture level	30%	
fuel oil costs, $/million btu	$10	
office overhead factor	2.5	
field overhead factor	1.5	
salaries, $/hour		
field manager/chemist	$20.0	
field operator	$15.0	
Total cubic yards to be processed	50000	yrs cleanup = 0.95
Permitting handled by prime contractor		

Reagent costs as noted below (bulk cost used for estimate)

	Bulk cost	Drum cost
KOH cost $/#	$0.17	$0.19
TMH cost $/#	$0.57	$0.65
DMSO cost $/#	$0.82	$0.94
PEG cost $/#	$0.61	$0.69
HCl cost $/#		$0.09

Costs for processing (no profit)	# units	cost/unit	unit	total cost $	Comments
1. Electrical power/phone service			project	$150,000	
2. personal protective equipment	1389	$40	man-day	$55,556	
3. reagent	50000	$50	cubic yard	$2,500,000	to be confirmed during pilot
4. waste disposal	50000	$10	cubic yard	$500,000	to be confirmed during pilot
5. field labor					
field manager	9167	$30	hour	$275,000	includes 10% training time
field operator	9167	$23	hour	$206,250	
6. office support					
senior scientist/chemist	1375	$75	hour	$103,125	
travel/per diem	115	$600	trip	$68,750	
7. fuel costs	50000	$6	cubic yard	$300,000	
8. depreciation			project	$456,621	
9. maintenance			project	$480,000	
10. Per diem/travel	50	$2,200	week	$109,127	
11. Pilot testing				—	separate line item for budget
12. Demurrage on tank trucks			project	$40,000	
13. Mobilization/demobilization			project	$200,000	
estimated processing cost				$5,444,429	est $/yard = $109
contingency and misc.(15% of est cost)				$816,664	
profit (20% of est cost)				$1,088,886	
Total job cost				$7,349,979	

$/Cubic Yard SOIL = $147
$/ton = 98

Raising the volume of soil to be treated to 500,000 cubic yards significantly reduces the costs of processing, as shown in the following table.

ASSUMPTIONS		
Nominal processing rate, yards/batch	180	(twin triple reactor units)
estimated average cycle time, hours	8	(assumes 10 ppm cleanup goal)
processing hours/day	24	365 day operation
estimated % processing time	80%	
Average processing rate, yards/hour	18.00	yards/year= 157,680
depreciation, %/year	20%	
maintenance costs, % of capital/year	20%	
capital cost, $	$8500000	includes engineering and construction
average soil moisture level	30%	
fuel oil costs, $/million btu	$10	
office overhead factor	2.5	
field overhead factor	1.5	
salaries, $/hour		
field manager/chemist	$20.0	
field operator	$15.0	
Total cubic yards to be processed	500000	yrs cleanup = 3.17
Permitting handled by prime contractor		

Reagent costs as noted below (bulk cost used for estimate)

	Bulk cost	Drum cost
KOH cost/#	$0.17	$0.19
TMH cost/#	$0.57	$0.65
DMSO cost/#	$0.82	$0.94
PEG cost/#	$0.61	$0.69

Costs for processing (no profit)	# units	cost/unit		units	total cost $
1. Electrical power/phone service				$750,000	
2. personal protective equipment	4630	$40	man-day	$185,185	
3. reagent	500000	$50	cubic yard	$25,000,000	to be confirmed during pilot
4. waste disposal	500000	$10	cubic yard	$5,000,000	to be confirmed during pilot
5. field labor					
field manager	30556	$30	hour	$916,667	includes 10% training time
field operator	30556	$23	hour	$687,500	
support chemist	15278	$26	hour	$401,042	
6. office support					
senior scientist/chemist	4583	$75	hour	$343,750	
travel/per diem	382	$600	trip	$229,167	
7. fuel costs	500000	$6	cubic yard	$3,000,000	
8. depreciation			project	$5,390,665	
9. maintenance			project	$1,700,000	
10. Per diem/travel	248	$2,200	week	$545,635	
12. Demurrage			project	$40,000	
14. Mobilization/demobilization			project	$400,000	
estimated processing cost				$44,589,610	est $/yard = $89
contingency and misc.(15% of est cost)				$6,688,441	
profit (20% of est cost)				$8,917,922	
Total job cost				$60,195,973	

$/Cubic Yard SOIL = $120
$/ton = $80

9. Process Optimization

The primary tool for process optimization is the pilot plant. During pilot testing a 1/100 size reactor (40 gallon) is used to simulate the operation of the full scale process. This equipment is large enough to allow quantitative scaleup to the full size equipment, but small enough to allow inexpensive operation. Using the pilot plant, it is possible to test a wide variety of equipment and procedure modifications at relatively low cost. Pilot testing of the KPEG process was done during the summer of 1988 at a site with fine grained soil. Since that soil was slightly different from New Bedford sediment, a pilot study using New Bedford sediment would be necessary to optimize the process for the New Bedford site.

10. Information Specific to KPEG Processing

10.1. Destruction and Removal Efficiencies

Table 6 shows the data used to calculate the PCB destruction and removal efficiencies for the gallon reactions.

Table 6. Calculation of Destruction & Removal Efficiencies

High Soil Reaction	Pounds	Kilograms	PCB, mg/kg	mg PCB
Input				
Initial Soil (dry basis)	2.0	0.9	7300.0	6477.1
Outputs				
Final Soil (dry basis)	0.8	0.4	27.0	10.1
Reagent	8.9	4.0	2.8	11.3
Wash 1	7.3	3.3	0.6	1.9
Wash 2	6.1	2.8	0.1	0.1
Condensate	3.4	1.5	330.0	510.0
Vent trap	NA	NA	NA	0.0
Sum of Outputs				533.5
Destruction Efficiency		91.8%		
Removal efficiency		99.8%		

Low Soil Reaction	Pounds	Kilograms	PCB, mg/kg	mg PCB
Input				
Initial Soil - dry basis	2.3	1.0	440.0	460.0
Outputs				
Final Soil - dry basis	0.9	0.4	1.9	0.8
Reagent	7.3	3.3	0.6	2.1
Wash 1	8.5	3.9	0.3	1.1
Wash 2	6.1	2.8	0.2	0.4
Condensate	2.9	1.3	27.0	35.6
Vent trap	NA	NA	NA	ND
Sum of Outputs				39.9
Destruction Efficiency		91.3%		
Removal efficiency		99.8%		

Destruction efficiency is defined as the percentage of PCB destroyed by the process. It is calculated by dividing the total mg of PCB in all process outputs by the mg of PCB in the untreated soil and multiplying by 100. Destructions efficiencies were 91.8 % for the high PCB soil reaction and 91.3 % for the low PCB soil reaction. Most of the PCB that was not destroyed was in the condensate.

Removal efficiency is defined as the percentage of PCB removed from the soil by the process. Removal efficiency was calculated by dividing the mg of PCB in the finished soil by the mg PCB in the untreated soil and multiplying by 100. Total removal was the sum of destruction, distillation and washing effects. Removal efficiencies were 99.8 % for both high and low soil reactions.

Since destruction and removal efficiencies were calculated based on the analysis of each reaction compartment, and since total mass recoveries were 95% or greater for both reactions (see Appendix A), it is not necessary to correct the figures for "lost" material. The mass balance shows that the non-recovered sediment remained in the reagents and washes. Its PCB content was therefore included in the PCB analysis of the liquid containing it.

10.2. Toxicity of Reaction Products

Both pure reaction products and treated soil from KPEG processing have been subjected to acute oral toxicity testing (using guinea pigs) and Ames testing for mutagenicity. The reaction products and treated soil are non-toxic and non mutagenic

10.3. Reagent Residuals in Processed Soil

After two washes, 4 mg/g of PEG, 2 mg/g of TMH, 4 mg/g of DMSO and 20 mg/g of KOH remained in the soil (see Section 6.3). Of these components, the major hazard is the KOH, which can be neutralized with acid to form a harmless salt. PEG, TMH, and DMSO are relatively non-toxic and there are no current guidelines for concentrations of these compounds in soil or water. If lower concentrations are desired, the number of washes could be increased. Table 7. provides estimates of residual concentrations of the reagent components as the number of washes is increased. The concentrations after the first two washes are taken from the soil washing study described in section 6.3.

Table 7. Estimated Reagent Residuals with Increased Washing

	Reagent concentrations in mg/g wet soil			
	PEG	TMH	DMSO	KOH
After Reagent Drain*	8.9	9.95	24.4	147.5
After Wash 1*	10.1	4.1	14	66.5
After Wash 2*	3.6	2.2	4.35	21.5
After Wash 3	*2.8*	*1*	*2*	*8.7*
After Wash 4	*1.8*	*0.5*	*0.9*	*3.3*
After Wash 5	*1.1*	*0.2*	*0.4*	*1.3*
After Wash 6	*0.7*	*0.1*	*0.2*	*0.5*
After Wash 7	*0.5*	*0.05*	*0.06*	*0.2*

*averages of high and low soil results from Section 6.3

The number of washes selected will depend on client wishes and on the requirements of the various regulatory agencies governing the New Bedford Harbor remediation. Each additional wash will increase the cycle time and labor and will therefore increase the cost of processing.

10.4. Separation of Fine Grained Sediment from Reagent and Wash Water

The separation method used for this project was centrifugation at 2200 G (2200 x normal gravity). Materials were fed into the centrifuge by pouring from a gallon jar into a funnel positioned at the centrifuge inlet. The liquid recovered was fed through the centrifuge a second time in an attempt to improve the separation. The feed rate was approximately half a gallon per minute. Although GRC recovered more than 95% of the total mass of soil reagent and wash water, the recovery of soil (on a dry weight basis) averaged only 43%. This indicates that substantial quantities of fine particles were left with the reagent and wash water. As this process is scaled up, it will be necessary to improve the recovery of fine grained sediments. This could be accomplished by using coagulation aids such as ferrous sulfate, by using settling tanks and holding the reagent and wash water for longer time periods, or by improving the efficiency of centrifugation by controlling the feed rate and/or increasing the G force applied.

During recent pilot scale work at another site with fine grained soil, regent, condensate and wash water were recycled through a series of reactions. The first reaction had the lowest soil recovery: 60%. The other reactions had higher recoveries - up to 84%. Apparently, soil particles and humic acids are suspended or dissolved in reagents and washes. After a few reactions, they build up to an equilibrium concentration. When the equilibrium concentration is reached, the solids no longer accumulate in the system. Also, portions of the soil may actually react with the reagent to form water soluble salts such as calcium hydroxide. Such reactions would result in a loss of soil mass that would not be recovered until the salts build up to their solubility point, which could take dozens of reactions. If water is recovered by distillation or reverse osmosis, solids recovery would be accelerated. In the pilot study, dark brown solids were seen in the bottom of the still used to reclaim reagent from wash water after the fifth reaction. The solids were largely soluble in water. They were probably accumulated potassium salts of humic acid and other salts from processing.

After the recent pilot study, a 50 lb sample of reaction slurry was sent to the centrifuge manufacturer for optimization tests. GRC's pilot study soil recoveries ranged from 60 to 84% for reaction, reagent removal and three washes. At the same centrifuge speed, using varied feed rates, the manufacturer obtained recoveries between 81 and 95% for the reagent removal and three washes. These data clearly show the importance of controlling the feed rate during centrifuge operations.

10.5. Effect of Water on KPEG Processing

Water quenches the KPEG dechlorination of PCBs, but in this project, GRC has demonstrated wet soils can be treated by the KPEG process because water is removed as the reaction is heated. There is a cost involved in the energy required to boil off large quantities of water, and if some of the water can be drained off before processing, some energy, and therefore some money could be saved.

Appendix A.

Data Sheets for Gallon Reactions

Data for 1 Gallon Reaction with New Bedford "High PCB" Soil

	A	B	C	D	E	F	G
1	**Inputs**	pounds	**Outputs**	pounds		**Other Parameters**	
2	Untreated Soil	6.1	Treated Soil	1.5		Max temp, °C	167°C
3	Reagent	7.0	Reagent	8.9		Sulfoxide used	DMSO
4	water (at end)	3.5	condensate	3.4			
5			Slurry samps	0.2	list below		
6			Soil samps	0.4	lines 45 & 50		
7	Wash 1	6.0	Wash 1	7.3			
8	Wash 2	6.0	Wash 2	6.1			
9	Total Inputs	28.6	Total Outputs	27.8	97%	Mass Recovery	
10							
11	Sample number		g slurry	g dry soil	ppm PCB	Reaction time	(hours)
12	R70078803310700SJR		9.8	1.1	9400	1	
13	R70078803310800SJR		8.1	0.9	5700	2	
14	R70078803310900SJR		6.9	0.9	3500	3	
15	R70078803311000SJR		8.3	1.1	1600	4	
16	R70078803311100SJR		8.6	1.3	480	5	
17	R70078803311200SJR		7.2	1.0	500	6	
18	R70078803311300SJR		8.9	1.4	80	7	
19	R70078803311400SJR		7.2	1.2	23	8	
20	R70078803311500SJR		9.9	1.8	5.6	9	
21	R70078803311600STG		9.9	1.5	6.8	10	
22	R70078803311700STG		8.6	1.2	3.3	11	
23	R70078803311800STG		6.9	1.0	3.7	12	
24		total g	100.3	14.4			
25		total pounds	0.22066	0.03168			
26							
27	INITIAL SOIL, SAMPLE #		R70078803300940SJR		7300	0	
28	CONDENSATE, SAMPLE #		R70078803311800CRG		330		
29	ADSORBENT TRAP, SAMPLE #		R70078803311800DRG		2 µg total		
30	DRIED FINAL SOIL, SAMPLE#		R70078804251025SRG		3.5	4/28/88, without mono-	
31	FINAL SOIL, SAMPLE#		R70078804251025SRG		2.8	9/9/88, with mono-	
32							
33	**GROSS MASS BALANCE FOR REACTION**						
34							
35	Total mass weighed into reactor (in pounds)			16.6			
36	Total mass of samples removed from reactor			0.2			
37	Total mass in reactor at end of reaction			12.5			
38	Mass of condensate collected from reactor			3.4			
39	*Mass lost during reaction and sampling*			*0.5*			
40							
41	**GROSS MASS BALANCE FOR SOIL WASHING**						
42							
43	Mass in reactor after reaction			12.5			
44	Mass of reagent recovered			8.9			
45	*Mass in apparatus after reagent removal*			*3.6*			
46	Sample taken after reagent drain			0.1			
47							
48	Mass of wash 1 added			6.0			
49	Mass of wash 1 recovered			7.3			
50	*Mass in apparatus after Wash #1*			*2.3*			
51	Sample taken after wash 1#			0.2			
52							
53	Mass of wash 2 added			6.0			
54	Mass of wash 2 recovered			6.1			
55	*Mass in apparatus after Wash #2*			*2.2*			
56							
57	Dry soil recovered			1.5			
58	*Mass lost in filtration and soil drying*			*0.7*			

All masses in pounds unless otherwise specified.

Data for 1 Gallon Reaction with New Bedford "Low PCB" Sediment

	A	B	C	D	E	F	G
1	**Inputs**	pounds	**Outputs**	pounds		**Other Parameters**	
2	Untreated Soil	6.0	Treated Soil	1.7		Max temp, °C	164
3	Reagent	7.0	Reagent	7.3		Sulfoxide used	DMSO
4	Water (at end)	3.4	condensate	2.9			
5			Slurry samps	0.2	list below		
6			Soil samps	0.3	lines 42 &47		
7	Wash 1	6.0	Wash 1	8.5			
8	Wash 2	6.0	Wash 2	6.1			
9	Total Inputs	28.4	Total Outputs	27.0	95%	Mass Recovery	
10							
11	Sample number		g slurry	g dry soil	ppm PCB	Reaction time (hours)	
12	R70078804050700SJR		10.4	1.3	460	1	
13	R70078804050800SJR		9.6	1.2	130	2	
14	R70078804050900SJR		9.9	1.4	92	3	
15	R70078804051000SJR		9.6	lost	lost	4	
16	R70078804051100SJR		8.5	1.6	Not Valid	5	
17	R70078804051200SJR		10.1	1.8	2.7	6	
18	R70078804051300SJR		7.4	1	2.3	7	
19	R70078804051400SJR		9.8	1.6	0.59	8	
20	R70078804051500SJR		8.5	1.5	0.48	9	
21		total g	83.8	11.4			
22		total pounds	0.18436	0.02508			
23							
24	INITIAL SOIL, SAMPLE#		R70078804041200SJR		440	0	
25	CONDENSATE, SAMPLE#		R70078804051500CRG		27		
26	ADSORBENT TRAP, SAMPLE#		R70078804051800DRG		N.D. (<1 ug in	trap)	
27	DRIED FINAL SOIL, SAMPLE#		R70078804221059SRG		0.7	4/28/88, without mono-	
28	FINAL SOIL, SAMPLE#		R70078804221120SRG		0.5	9/8/88, with mono-	
29							
30	**GROSS MASS BALANCE FOR REACTION**						
31							
32	Total mass weighed into reactor (in pounds)			16.4			
33	Total mass of samples removed from reactor			0.2			
34	Total mass in reactor at end of reaction			12.6			
35	Mass of condensate collected from reactor			2.9			
36	*Mass lost during reaction and sampling*			*0.7*			
37							
38	**GROSS MASS BALANCE FOR SOIL WASHING**						
39							
40	Mass in reactor after reaction			12.6			
41	Mass of reagent recovered			7.3			
42	*Mass in apparatus after reagent removal*			*5.3*			
43	Sample taken after reagent drain step			0.1			
44							
45	Mass of wash 1 added			6.0			
46	Mass of wash 1 recovered			8.5			
47	*Mass in apparatus after Wash #1*			*2.7*			
48	Sample taken after wash #1			0.2			
49							
50	Mass of wash 2 added			6.0			
51	Mass of wash 2 recovered			6.1			
52	*Mass in apparatus after Wash #2*			*2.6*			
53							
54	Wet soil recovered			1.7			
55	*Mass lost in soil washing*			*0.9*			

All masses in pounds unless otherwise specified.

Appendix B.

Results of CLP Analysis

SUMMARY TABLE PROJECT: NEW BEDFORD HARBOR

		PRE-TEST SEDIMENT RESULTS (GALSON)		POST-TEST RESULTS (GALSON)					
SAMPLE LOCATION:		GALSON-HL	G-LL	HS/WASH 1	LS/WASH 1	HS/WASH 2	LS/WASH 2	HS/REAGENT	LS/REAGENT
SMO NUMBER:		AK071/MAH188	AK076/MAH193	AK350	AK351	AK352	AK353	AK354	AK355
UNITS:		ug/kg	ug/kg	ug/kg	ug/kg	ug/kg	ug/kg	ug/l	ug/l
SEMI-VOLATILE ORGANIC COMPOUNDS	CRDL ug/kg								
1,3 - Dichlorobenzene	330	22000 J	430 J	NR	NR	NR	NR	NR	NR
1,4 - Dichlorobenzene	330	60000 J	620 J	NR	NR	NR	NR	NR	NR
4-Methylphenol	330	-	-	NR	NR	NR	NR	NR	NR
1,2,4 - Trichlorobenzene	330	60000 J	-	NR	NR	NR	NR	NR	NR
Naphthalene	330	-	230 J	NR	NR	NR	NR	NR	NR
2-Methylnaphthalene	330	-	180 J	NR	NR	NR	NR	NR	NR
Acenaphthylene	330	-	740 J	NR	NR	NR	NR	NR	NR
Acenaphthene	330	-	520 J	NR	NR	NR	NR	NR	NR
Dibenzofuran	330	-	250 J	NR	NR	NR	NR	NR	NR
Fluorene	330	-	670 J	NR	NR	NR	NR	NR	NR
Phenanthrene	330	-	6600	NR	NR	NR	NR	NR	NR
Anthracene	330	-	7000	NR	NR	NR	NR	NR	NR
Di-n-Butylphthalate	330	-	-	NR	NR	NR	NR	NR	NR
Fluoranthene	330	-	13000	NR	NR	NR	NR	NR	NR
Pyrene	330	16000 J	23000	NR	NR	NR	NR	NR	NR
Butylbenzylphthalate	330	-	-	NR	NR	NR	NR	NR	NR
Benzo (a) Anthracene	330	-	-	NR	NR	NR	NR	NR	NR
bis (2-Ethylhexyl) Phthalate	330	36000 J	24000	NR	NR	NR	NR	NR	NR
Chrysene	330	-	6300	NR	NR	NR	NR	NR	NR
Benzo (b) Fluoranthene	330	-	14000	NR	NR	NR	NR	NR	NR
Benzo (k) Fluoranthene	330	-	-	NR	NR	NR	NR	NR	NR
Benzo (a) Pyrene	330	-	8700	NR	NR	NR	NR	NR	NR
Indeno (1,2,3-cd) Pyrene	330	-	-	NR	NR	NR	NR	NR	NR
Dibenz (a,h) Anthracene	330	-	-	NR	NR	NR	NR	NR	NR
Benzo (g,h,i,) Perylene	330	-	-	NR	NR	NR	NR	NR	NR
2,4 - Dinitrotoluene	330			NR	NR	NR	NR	NR	NR
N - Nitrosodiphenylamine (1)	330			NR	NR	NR	NR	NR	NR
PESTICIDES/PCB	CRDL ug/kg								
Aroclor-1242	80	8500000 J	100000 J	-	-	-	-	-	-
Aroclor-1248	80	-	-	-	-	-	-	-	-
Aroclor-1254	160	3200000 DJ	51000 DJ	-	-	-	-	-	-
Heptachlor	0.05	-	-	-	-	-	57 J	2400	130
Dieldrin	0.10	-	-	-	-	-	-	6600	590
4,4-DDE	0.10	-	-	-	-	-	-	3100	-
Endrin Aldehyde	0.10	-	-	-	-	-	-	1700	-

SUMMARY TABLE

SAMPLE LOCATION:		HSH2O/WASH 1	LSH2O/WASH1	HSH2O/WASH2	LSH2O/WASH2
SMO NUMBER:		AK356	AK357	AK358	AK359
UNITS:		ug/l	ug/l	ug/l	ug/l
SEMI-VOLATILE ORGANIC COMPOUNDS	CRDL ug/kg				
1,3 - Dichlorobenzene	330	NR	NR	NR	NR
1,4 - Dichlorobenzene	330	NR	NR	NR	NR
4-Methylphenol	330	NR	NR	NR	NR
1,2,4 - Trichlorobenzene	330	NR	NR	NR	NR
Naphthalene	330	NR	NR	NR	NR
2-Methylnaphthalene	330	NR	NR	NR	NR
Acenaphthylene	330	NR	NR	NR	NR
Acenaphthene	330	NR	NR	NR	NR
Dibenzofuran	330	NR	NR	NR	NR
Fluorene	330	NR	NR	NR	NR
Phenanthrene	330	NR	NR	NR	NR
Anthracene	330	NR	NR	NR	NR
Di-n-Butylphthalate	330	NR	NR	NR	NR
Fluoranthene	330	NR	NR	NR	NR
Pyrene	330	NR	NR	NR	NR
Butylbenzylphthalate	330	NR	NR	NR	NR
Benzo (a) Anthracene	330	NR	NR	NR	NR
bis (2-Ethylhexyl) Phthalate	330	NR	NR	NR	NR
Chrysene	330	NR	NR	NR	NR
Benzo (b) Fluoranthene	330	NR	NR	NR	NR
Benzo (k) Fluoranthene	330	NR	NR	NR	NR
Benzo (a) Pyrene	330	NR	NR	NR	NR
Indeno (1,2,3-cd) Pyrene	330	NR	NR	NR	NR
Dibenz (a,h) Anthracene	330	NR	NR	NR	NR
Benzo (g,h,i,) Perylene	330	NR	NR	NR	NR
2,4 - Dinitrotoluene	330	NR	NR	NR	NR
N - Nitrosodiphenylamine (1)	330	NR	NR	NR	NR
PESTICIDES/PCB	CRDL ug/kg				
Aroclor-1242	80	-	-	-	-
Aroclor-1248	80	-	-	-	-
Aroclor-1254	160	-	-	-	-
Heptachlor	0.05	37	15	14	40
Dieldrin	0.10	12	-	-	-
4,4-DDE	0.10	-	-	-	-
Endrin Aldehyde	0.10	-	-	-	-

Appendix C.

Sample Log

SAMPLES CREATED AND ANALYZED FOR NEW BEDFORD LAB, JOB #R7007							
		generation	Analyzed	extraction	analysis		
Sample No	Description	Date	for	prep date	date	RESULT	units
R70078802171410SJRA	Initial sample low PCB soil	2/17/88	PCB	2/17/88	2/22/88	460	ug/g
R70078802171410SJRB	Initial sample low PCB soil	2/17/88		2/17/88			ug/g
R70078802171433SJR	Untreated soil (low PCB)	2/17/88	% moisture		2/29/88	61	%
R70078802171610SJRA	Initial sample high PCB soil	2/17/88	PCB	2/17/88	2/22/88	6100	ug/g
R70078802171610SJRC	Initial sample high PCB soil	2/17/88	PCB	2/17/88	2/22/88	6100	ug/g
R70078802171620SJR	Untreated soil (high PCB)	2/17/88	% moisture		2/29/88	68	%
R70078802191600DEM	DMSO Rxn trap (reactor 1)	2/22/88	weight gain		2/23/88	6.6	g
R70078802191602DEM	SFLN Rxn trap (reactor 2)	2/22/88	weight gain		2/23/88	3.1	g
R70078802220700SJR	Reactor 1 initial sample	2/22/88	PCB		3/01/88	400	ug/g
R70078802220702SJR	Reactor 2 initial sample	2/22/88	PCB		3/01/88	780	ug/g
R70078802220800SJR	Reactor 1 1hr sample	2/22/88	PCB	2/22/88	2/22/88	810	ug/g
R70078802220802SJR	Reactor 2 1hr sample	2/22/88	PCB	2/22/88	2/22/88	250	ug/g
R70078802220900SJR	Reactor 1 2hr sample	2/22/88	PCB		3/01/88	400	ug/g
R70078802220902SJR	Reactor 2 2hr sample	2/22/88	PCB		3/01/88	270	ug/g
R70078802221000SJR	Reactor 1 3hr sample	2/22/88	PCB	2/22/88	3/07/88	48	ug/g
R70078802221002SJR	Reactor 2 3hr sample	2/22/88	PCB	3/01/88	3/01/88	820	ug/g
R70078802221002SJR	Reactor 2 3hr sample	2/22/88	PCB	3/01/88	3/07/88	Not Valid	ug/g
R70078802221100SJR	Reactor 1 4hr sample	2/22/88	PCB		3/01/88	Not Valid	ug/g
R70078802221102SJR	Reactor 2 4hr sample	2/22/88	PCB	2/22/88	2/22/88	Not Valid	
R70078802221200SJR	Reactor 1 5hr sample	2/22/88	PCB	2/22/88	3/07/88	4.2	ug/g
R70078802221202SJR	Reactor 2 5hr sample	2/22/88	PCB	3/01/88	3/07/88	120	ug/g
R70078802221202SJR	Reactor 2 5hr sample	2/22/88	PCB	3/01/88	3/07/88	130	ug/g
R70078802221300SJR	Reactor 1 6hr sample	2/22/88	PCB	3/01/88	3/01/88	430	ug/g
R70078802221302SJR	Reactor 2 6hr sample	2/22/88	PCB	2/22/88	2/22/88	Not Valid	
R70078802221400SJR	Reactor 1 7hr sample	2/22/88	PCB	2/22/88	3/07/88	3.8	ug/g
R70078802221402SJR	Reactor 2 7hr sample	2/22/88	PCB	3/02/88	3/07/88	11	ug/g
R70078802221500SJR	Reactor 1 8hr sample	2/22/88	PCB	2/22/88	3/01/88	Not Valid	ug/g
R70078802221502SJR	Reactor 2 8hr sample	2/22/88	PCB	2/22/88	2/22/88	Not Valid	
R70078802221600STG	Reactor 1 9hr sample	2/22/88	PCB	3/07/88	3/07/88	2.2	ug/g
R70078802221602STG	Reactor 2 9hr sample	2/22/88	PCB		3/07/88	15	ug/g
R70078802221622STG	Reactor 2 9hr 20min sample	2/22/88	PCB		3/01/88	18	ug/g
R70078802222000CRG	Condensate	3/14/88	PCB	3/14/88			

New Bedford Sample Log

Sample No	Description	generation Date	Analyzed for	extraction prep date	analysis date	RESULT	units
R70078803090700STG	Reactor 1 1hr sample	3/09/88					
R70078803090702STG	Reactor 2 1 hr sample	3/09/88					
R70078803090800STG	Reactor 1 2hr sample	3/09/88	PCB	3/09/88	3/09/88	16000	ug/g
R70078803090802STG	Reactor 2 2hr sample	3/09/88	PCB	3/09/88	3/09/88	Not Valid	ug/g
R70078803090900STG	Reactor 1 3hr sample	3/09/88					
R70078803090902STG	Reactor 2 3hr sample	3/09/88					
R70078803091000STG	Reactor 1 4hr sample	3/09/88	PCB	3/09/88	3/09/88	5900	ug/g
R70078803091002STG	Reactor 2 4hr sample	3/09/88	PCB	3/09/88	3/09/88	6400	ug/g
R70078803091100STG	Reactor 1 5hr sample	3/09/88					
R70078803091102STG	Reactor 2 5hr sample	3/09/88					
R70078803091200SJR	Reactor 1 6hr sample	3/09/88	PCB	3/09/88	3/09/88	260	ug/g
R70078803091202SJR	Reactor 2 6hr sample	3/09/88	PCB	3/09/88	3/09/88	1500	ug/g
R70078803091300STG	Reactor 1 7hr sample	3/09/88					
R70078803091302STG	Reactor 2 7hr sample	3/09/88					
R70078803091400RJR	Reactor 1 wash water	3/09/88	KOH	3/09/88	3/09/88	60.8	mg/g
R70078803091400SJR	Reactor 1 8hr sample	3/09/88	PCB	3/09/88	3/09/88	240	ug/g
R70078803091402RJR	Reactor 2 wash water	3/09/88	KOH	3/09/88	3/09/88	133	mg/g
R70078803091402SJR	Reactor 2 8hr sample	3/09/88	PCB	3/09/88	3/09/88	200	ug/g
R70078803091500SJR	Reactor 1 9hr sample	3/09/88	PCB	3/09/88	3/09/88	280	ug/g
R70078803091502SJR	Reactor 2 9hr sample	3/09/88					
R70078803091600SJR	Reactor 1 10hr sample	3/09/88	PCB	3/09/88	3/09/88	150	ug/g
R70078803091602SJR	Reactor 2 10hr sample	3/09/88	PCB	3/09/88	3/09/88	51	ug/g
R70078803091700SJR	Reactor 1 11hr sample	3/09/88					
R70078803091702SJR	Reactor 2 11hr sample	3/09/88					
R70078803091800SJR	Reactor 1 12hr sample	3/09/88	PCB	3/09/88	3/09/88	210	ug/g
R70078803091802SJR	Reactor 2 12hr sample	3/09/88	PCB	3/09/88	3/09/88	140	ug/g
R70078803092000CRG	Condensate	3/14/88	PCB	3/14/88			
R70078803092002CRG	Condensate	3/14/88	PCB	3/14/88			
R70078803101140RRG	Reagent from reactor 1	3/10/88	PEG	3/10/88	3/10/88	260	mg/g
R70078803101140RRG	Reagent from reactor 1	3/10/88	TMH	3/10/88	3/10/88	160	mg/g
R70078803101140RRG	Reagent from reactor 1	3/10/88	DMSO	3/10/88	3/10/88	270	mg/g
R70078803101140RRG	Reagent from reactor 1	3/10/88	KOH	3/10/88	3/10/88	14.2	mg/g
R70078803101140RRG	Reactor 1 reagent	3/10/88					
R70078803101145RRG	Reagent from reactor 2	3/10/88	PEG	3/10/88	3/10/88	240	mg/g

New Bedford Sample Log

Sample No	Description	generation Date	Analyzed for	extraction prep date	analysis date	RESULT	units
R70078803210900SJR	Reactor 3hr sample	3/21/88					
R70078803211000SJR	Reactor 4hr sample	3/21/88	PCB	3/21/88	3/21/88	Not Valid	ug/g
R70078803211100SJR	Reactor 5hr sample	3/21/88					
R70078803211200SJR	Reactor 6hr sample	3/21/88	PCB	3/21/88	3/21/88	1.8	ug/g
R70078803211300SJR	Reactor 7hr sample	3/21/88	PCB	3/21/88	3/21/88	0.8	ug/g
R70078803211400SJR	Reactor 8hr sample	3/21/88					
R70078803211430CRG	Condensate	3/21/88	PCB	3/24/88	3/21/88	1100	ug/g
R70078803280700SJR	Reactor 1 hr sample	3/28/88					
R70078803291240CRG	Condensate: 1 gal practice rxn	3/29/88	PCB	4/13/88	4/28/88	260	ug/g
R70078803291300SJR	Reactor 7hr sample	3/29/88	PCB	3/29/88	3/29/88	52	ug/g
R70078803300940SJR	High PCB starting soil	3/30/88	PCB		3/31/88	7300	ug/g
R70078803310700SJR	Reactor 1hr sample	3/31/88	PCB	4/01/88	4/01/88	9400	ug/g
R70078803310800SJR	Reactor 2hr sample	3/31/88	PCB	3/31/88	3/31/88	5700	ug/g
R70078803310900SJR	Reactor 3hr sample	3/31/88	PCB	4/01/88	4/01/88	3500	ug/g
R70078803311000SJR	Reactor 4hr sample	3/31/88	PCB	3/31/88	3/31/88	1600	ug/g
R70078803311100SJR	Reactor 5hr sample	3/31/88	PCB	4/01/88	4/01/88	480	ug/g
R70078803311200SJR	Reactor 6hr sample	3/31/88	PCB	3/31/88	3/31/88	500	ug/g
R70078803311300SJR	Reactor 7hr sample	3/31/88	PCB	3/31/88	3/31/88	80	ug/g
R70078803311400SJR	Reactor 8hr sample	3/31/88	PCB	3/31/88	3/31/88	23	ug/g
R70078803311500SJR	Reactor 9hr sample	3/31/88	PCB	3/31/88	3/31/88	5.6	ug/g
R70078803311600STG	Reactor 10hr sample	3/31/88	PCB	3/31/88	3/31/88	6.8	ug/g
R70078803311700STG	Reactor 11hr sample	3/31/88	PCB	3/31/88	3/31/88	3.3	ug/g
R70078803311800CRG	Condensate: 1 gal high soil rxn	3/30/88	PCB	4/13/88	4/28/88	330	ug/g
R70078803311800DRG	Drying tube: 1 gal high soil rxn	3/31/88	weight gain		4/01/88	1	g
R70078803311800DRG	Trap: high soil gallon reaction	3/31/88	PCB	7/19/88	7/20/88	2	ug/g
R70078803311800STG	Reactor 12hr sample	3/31/88	PCB	3/31/88	3/31/88	3.7	ug/g
R70078804010805CRG	Condensor 1 condensate	4/05/88	Part of R70078803311800CRG				
R70078804010807CRG	Condensor 2 condensate	4/05/88	Part of R70078803311800CRG				
R70078804010810CRG	Reactor burp flask	4/05/88					
R70078804041200SJR	NB Low starting soil	4/04/88	PCB	4/05/88	4/05/88	440	ug/g
R70078804050700SJR	Reaction 1hr sample	4/05/88	PCB	4/05/88	4/05/88	460	ug/g
R70078804050800SJR	Reaction 2hr sample	4/05/88	PCB	4/05/88	4/05/88	130	ug/g
R70078804050900SJR	Reaction 3hr sample	4/05/88	PCB	4/05/88	4/05/88	92	ug/g
R70078804051000SJR	Reaction 4hr sample	4/05/88					

New Bedford Sample Log

Sample No	Description	generation Date	Analyzed for	extraction prep date	analysis date	RESULT	units
R70078804221120SRG	low soil (gal.) after second wash	4/22/88	KOH	7/20/88	7/20/88	21	mg/g
R70078804221120SRG	low soil (gal.) after second wash	4/22/88	PEG	7/20/88	7/21/88	1.4	mg/g
R70078804221120SRG	low soil (gal.) after second wash	4/22/88	TMH	7/20/88	7/21/88	2.3	mg/g
R70078804221120SRG	low soil (gal.) after second wash	4/22/88	DMSO	7/20/88	7/21/88	4.4	mg/g
R70078804250840RRG	Reagent from high soil gallon rxn	4/25/88	KOH	6/17/88	6/17/88	198	mg/g
R70078804250840RRG	Reagent from high soil gallon rxn	4/25/88	PCB	6/18/88	6/18/88	2.8	ug/g
R70078804250840RRG	Reagent from high soil gallon rxn	4/25/88	PEG	6/15/88	6/19/88	90	mg/g
R70078804250840RRG	Reagent from high soil gallon rxn	4/25/88	TMH	6/15/88	6/19/88	90	mg/g
R70078804250840RRG	Reagent from high soil gallon rxn	4/25/88	DMSO	6/15/88	6/19/88	160	mg/g
R70078804250925SRG	high soil (gal.) after reag. drain	4/25/88	KOH	7/20/88	7/20/88	133	mg/g
R70078804250925SRG	high soil (gal.) after reag. drain	4/25/88	PEG	7/20/88	7/21/88	15.8	mg/g
R70078804250925SRG	high soil (gal.) after reag. drain	4/25/88	TMH	7/20/88	7/21/88	12.3	mg/g
R70078804250925SRG	high soil (gal.) after reag. drain	4/25/88	DMSO	7/20/88	7/21/88	30.6	mg/g
R70078804250925SRG	NB High soil after reagent decant	4/25/88	% moisture		4/26/88	26	%
R70078804250938WRG	Wash 1 from high soil gallon rxn	4/25/88	KOH	6/17/88	6/17/88	62	mg/g
R70078804250938WRG	Wash 1 from high soil gallon rxn	4/25/88	PCB	6/18/88	6/18/88	0.57	ug/g
R70078804250938WRG	Wash 1 from high soil gallon rxn	4/25/88	PEG	6/15/88	6/19/88	39	mg/g
R70078804250938WRG	Wash 1 from high soil gallon rxn	4/25/88	TMH	6/15/88	6/19/88	7.6	mg/g
R70078804250938WRG	Wash 1 from high soil gallon rxn	4/25/88	DMSO	6/15/88	6/19/88	16	mg/g
R70078804250938WRG	Wash 1 from high soil gallon rxn	4/25/88	PCB	6/19/88	6/20/88	0.35	ug/g
R70078804250955SRG	high soil (gal.) after first wash	4/25/88	KOH	7/20/88	7/20/88	71	mg/g
R70078804250955SRG	high soil (gal.) after first wash	4/25/88	PEG	7/20/88	7/21/88	18.3	mg/g
R70078804250955SRG	high soil (gal.) after first wash	4/25/88	TMH	7/20/88	7/21/88	4.1	mg/g
R70078804250955SRG	high soil (gal.) after first wash	4/25/88	DMSO	7/20/88	7/21/88	15.3	mg/g
R70078804250955SRG	NB High soil wash 1	4/25/88	% moisture		4/26/88	35	%
R70078804251000WRG	Wash 2 from high soil gallon rxn	4/25/88	KOH	6/17/88	6/17/88	25	mg/g
R70078804251000WRG	Wash 2 from high soil gallon rxn	4/25/88	PEG	6/15/88	6/19/88	2.1	mg/g
R70078804251000WRG	Wash 2 from high soil gallon rxn	4/25/88	TMH	6/15/88	6/19/88	1.8	mg/g
R70078804251000WRG	Wash 2 from high soil gallon rxn	4/25/88	DMSO	6/15/88	6/19/88	4.2	mg/g
R70078804251000WRG	Wash 2 from high soil gallon rxn	4/25/88	PCB	6/19/88	6/20/88	0.054	ug/g
R70078804251025SRG	high soil (gal.) after second wash	4/25/88	KOH	7/20/88	7/20/88	22	mg/g
R70078804251025SRG	high soil (gal.) after second wash	4/25/88	PEG	7/20/88	7/21/88	5.8	mg/g
R70078804251025SRG	high soil (gal.) after second wash	4/25/88	TMH	7/20/88	7/21/88	2.1	mg/g
R70078804251025SRG	high soil (gal.) after second wash	4/25/88	DMSO	7/20/88	7/21/88	4.3	mg/g

New Bedford Sample Log

Sample No	Description	generation Date	Analyzed for	extraction prep date	analysis date	RESULT	units
R70078809081420SEM	Spiked dup. of ...04221120SRG	9/08/88	MCB**	9/09/88	9/09/88	0.12	ug/g
R70078809081430SEM	Duplicate of ...04251025SRG	9/08/88	PCB	9/09/88	9/09/88	2.8	ug/g
R70078809081430SEM	Duplicate of ...04251025SRG	9/08/88	MCB**	9/09/88	9/09/88	1.5	ug/g
R70078809081440SEM	Duplicate of ...04251025SRG	9/08/88	PCB	9/09/88	9/09/88	2.7	ug/g
R70078809081440SEM	Duplicate of ...04251025SRG	9/08/88	MCB**	9/09/88	9/09/88	1.4	ug/g
R70078809081450SEM	Spiked dup. of ...04251025SRG	9/08/88	PCB	9/09/88	9/09/88	7.1	ug/g
R70078809081450SEM	Spiked dup. of ...04251025SRG	9/08/88	MCB**	9/09/88	9/09/88	1.3	ug/g
		**MCB = monochlorobiphenyl					

Appendix D.

Analytical Spreadsheets

Contents

Understanding Webb McCall Spreadsheets	D-1
Webb McCall Spreadsheets (for PCB calculations)	D-4
Understanding Reagent Spreadsheets	D-81
Reagent Calculation Spreadsheets	D-82

Understanding Webb-McCall Spreadsheets

The concentration of PCB in samples is calculated according to the procedure of Webb and McCall as described in one of the EPA method for PCB analysis (EPA 600/4-81-045). Each PCB peak is treated as a separate compound and is quantified individually. The total PCB concentration in a sample is the sum of the concentrations represented by the various peaks.

As a general rule for gas chromatography, standards should bracket samples. In other words, it is best to have a standard of higher concentration and a standard of lower concentration for calculation of sample concentration. That way the sample concentration can be calculated by linear interpolation, which will greatly reduce inaccuracy caused by nonlinear detector response. The nanograms (ng) of PCB represented by each peak in a sample is calculated by linear interpolation between two standards having the same peak at higher and lower concentrations. The equation for this calculation is:

$$ng_{is} = ng_{ih} - [(A_{ih}-A_{il})(ng_{ih}-ng_{il})/(A_{ih}-A_{is})]$$

where i refers to a peak name,
s refers to the sample,
h refers to the higher standard,
l refers to the lower standard, and
A is a peak area.

The nanograms of PCB represented by a given peak (ng_i) within our 1:1 1242:1260 standard is calculated as follows.

$$ng_{ix} = C_x * V_l * M_i/100$$

where C_x is the concentration of Aroclor in standard x in ng/µL,
V_l is the injection volume of the standard in µL, and
M_i is the mean weight percent of peak i in the standard, given in the table below.

Composition of a 1:1 Mixture of Aroclors 1242 and 1260

Peak	Percent	Peak	Percent	Peak	Percent
11	0.55	58	2.8	203	4.65
16	1.45	70	6.5	232+244	4.9
21	5.65	78	1.8	280	5.5
28	5.5	84	3.7	332	2.1
32	3.05	98+104	3.45	372	2
37	5.75	117+125	7.8	448	0.3
40	5.55	146	7.55	528	0.75
47	4.4	160	2.45		
54	3.4	174	6.2	Total	97.75

(These percentages were obtained by adding up the Aroclor 1242 and 1260 percentages, taken from Tables 3 and 6 of the EPA method 600/4-81-045 and dividing by 2.)

Row 31 is where all the peak contributions are added up.

Row 36, column 2 for the sample is where the final soil concentration in soil is calculated. The equation for this calculation is;

$$\text{ppm in soil} = \frac{\text{total ng/injection x extract volume}}{\text{injection volume x soil mass x dilution}}$$

Dilution in this example is equal to .01 if a 1/100 dilution was used.

The purpose of column 3 for the sample is to indicate how the ng/injection for each peak was calculated. If the peak area is lower than that of the lowest standard for that peak, a "0" will be printed in column 10. If the peak area is higher than that of the highest standard, a "2" will be printed. If the peak area is within the range of the standards, a "1" will be printed. Samples with more than one or two 2's should be diluted further and re-injected. Samples with 0's that account for more than 25% of the total ng should be injected in a more concentrated form unless the soil concentration is below the desired detection limit.

NBWM2/22, Webb McCall Calculations for New Bedford

	K	L	M	N	O	P	Q	R	S	T	U	V
1	SAMPLE #	R70078802		SAMPLE #	R7007880217		SAMPLE #	R7007880222		SAMPLE #	R7007880222	
2		171610SJRA			1610SJRC			0800SJR			0802SJR	
3	dilution used	0.01		dilution used	0.002		dilution used	0.01		dilution used	0.005	
4	inj.vol	2		inj.vol	2		inj.vol	2		inj.vol	2	
5	Peak Area	ng/injection		Peak Area	ng/injection		Peak Area	ng/injection		Peak Area	ng/injection	
6	1955.49	0.2749966	2	443.61	0.0565328	1	111.02	0.00864507	1	49.6	0.00172713	0
7	2691.39	0.7014136	2	601.78	0.13107893	1	128.48	0.00584896	1	91.38	0.00413194	0
8	19968	3.0512099	2	4550.03	0.6300216	1	1530.52	0.15584748	1	444.88	0.02166359	0
9	31836	3.3167717	2	7321.6	0.69316197	1	2277.27	0.15330159	1	651.97	0.02919725	1
10	23362	1.7234311	2	5471.78	0.35615712	1	1322.52	0.04629056	1	351.05	0.00652082	0
11	75425	3.8524967	2	16240	0.75442459	1	9265.96	0.38936455	1	3120.89	0.08638653	1
12	47828	3.0605569	2	10529	0.61685739	1	1612.68	0.0590964	1	390.67	0.01136651	0
13	43107	3.110657	2	10100	0.67121311	1	5502.01	0.33139009	1	1951.2	0.07657699	1
14	31234	2.1519202	2	7165.72	0.44765372	1	2657.52	0.12842966	1	775.05	0.02520019	1
15	29393	1.4762392	2	6634.52	0.30516139	1	2596.52	0.09737896	1	759.99	0.01937077	1
16	73337	4.5495503	2	15774	0.88053253	1	5875.76	0.24962695	1	2165.12	0.06135197	1
17	21462	0.8806595	2	4589.85	0.16599587	1	2000	0.05629606	1	1708.14	0.04393358	1
18	31926	2.3574932	2	7737.58	0.52272464	1	2332.6	0.11273973	1	1538.9	0.06022436	1
19	43586	2.0666154	2	10265.97	0.43693919	1	4202.59	0.14038044	1	1638.72	0.03568301	1
20	39298	1.7874014	2	9490.54	0.30969101	1	3731.41	0.0754048	1	1050.92	0.01442517	0
21	24273	0.9307229	1	6147.69	0.13785663	1	2589.18	0.04489511	1		0	0
22	3214.78	0.0672387	1	831.61	0.0105052	1		0	0	669.39	0.00821862	0
23	20950	0.657582	1	5534.72	0.11056669	1	1718.29	0.02234318	0	440.06	0.00572217	0
24	10662	0.1711239	1	3255.94	0.03354283	1	1034.41	0.00859344	0	195.81	0.00162671	0
25	9459.63	0.1461162	1	2950.81	0.02930964	1	469.7	0.00397273	0	222.02	0.00187785	0
26	8106.28	0.0741358	1	2496.14	0.01576244	0	421.33	0.00266058	0	137.71	0.0008696	0
27	6190.09	0.0508789	1	2307.31	0.01144501	1	235.47	0.00099918	0		0	0
28	3243.41	0.0178919	1	1961.79	0.00822153	1		0	0		0	0
29	1432.28	0.003855	1	1019.35	0.00247567	1		0	0		0	0
30	1845.79	0.0054338	1	1803.27	0.00526718	1		0	0		0	0
31	DCB area	DCB ng/inj.		DCB area	DCB ng/inj.		DCB area	DCB ng/inj.		DCB area	DCB ng/inj.	
32		0	0		0	0	1948.71	0.00568867	1	1466.32	0.00273007	1
33												
34	Total ng PCB	36.486392		Total ng PCB	7.3430987		Total ng PCB	2.09350554		Total ng PCB	0.51607476	
35												
36	g used*	3		g used*	3		g used	1.3		g used	2.1	
37	mL total vol.	10		mL total vol.	10		mL total vol.	10		mL total vol.	10	
38	*as received, 68% moisture.			*as received, 68% moisture.								
39	ppm PCB	6081.0653	✓	ppm PCB	6119.24892	✓	ppm PCB	805.194437	✓	ppm PCB	245.749885	✓
40												
41	ul DCB used			ul DCB used			ul DCB used	5		ul DCB used	5	
42	conc (ng/ul)			conc (ng/ul)			conc (ng/ul)	484		conc (ng/ul)	484	
43	DCB %R	#DIV/0!		DCB %R	#DIV/0!		DCB %R	117.534587		DCB %R	112.812716	
44												
45	Homolog	ppm		Homolog	ppm		Homolog	ppm		Homolog	ppm	
46	mono	45.832771		mono	47.11067		mono	3.32502709		mono	0.8224423	
47	di	763.63607		di	778.659189		di	76.9314776		di	15.7594482	
48	tri	1972.3662		tri	1995.8636		tri	250.811342		tri	64.0418393	
49	tetra	1689.9205		tetra	1722.89705		tetra	287.826198		tetra	95.3930313	
50	penta	911.19708		penta	954.55819		penta	115.502464		penta	50.5489917	
51	hexa	619.55755		hexa	532.667179		hexa	65.0404994		hexa	15.3112704	
52	hepta	74.025029		hepta	74.1893944		hepta	5.7574289		hepta	3.87286217	
53	octa	4.5301185		octa	13.3036522		octa	0		octa	0	

NBWM2/22, Webb McCall Calculations for New Bedford

	AI	AJ	AK	AL	AM	AN	AO	AP	AQ	AR	AS	AT
1	SAMPLE #	R7007880222		SAMPLE #	R7007880222		SAMPLE #	R7007880222		SAMPLE #	R7007880222	
2		1200SJR			1302SJR			1200SJR 2nd inj			1302SJR	
3	dilution used	0.1		dilution used	0.1		dilution used	0.1		dilution used	0.1	
4	inj.vol	2		inj.vol	2		inj.vol	2		inj.vol	2	
5	Peak Area	ng/injection		Peak Area	ng/injection		Peak Area	ng/injection		Peak Area	ng/injection	
6	326.19	0.0395658	1		0	0	147.03	0.0136776	1	33.23	0.0011571	0
7	565.22	0.1211003	1		0	0	256.15	0.0367433	1	289.67	0.0458922	1
8	1122.99	0.0976577	1		0	0	805.1	0.0614446	1	1695.43	0.1817444	1
9	6066.11	0.5587954	1		0	0	8241.25	0.7915859	1	2447.43	0.1715127	1
10		0	0		0	0		0	0	4570.42	0.28727	1
11		0	0		0	0		0	0	5316.52	0.1826289	1
12		0	0		0	0		0	0	2752.68	0.1086008	1
13		0	0		0	0		0	0		0	0
14		0	0		0	0		0	0	5075.39	0.2996382	1
15		0	0		0	0		0	0		0	0
16	122873	7.7069331	2		0	0	98198	6.1341698	2	76660	4.7613555	2
17		0	0		0	0		0	0		0	0
18		0	0		0	0		0	0		0	0
19		0	0		0	0		0	0		0	0
20		0	0		0	0		0	0		0	0
21	1091.18	0.0162601	0		0	0		0	0		0	0
22		0	0		0	0		0	0		0	0
23		0	0		0	0		0	0		0	0
24		0	0		0	0		0	0		0	0
25	135.61	0.001147	0		0	0		0	0		0	0
26		0	0		0	0		0	0		0	0
27		0	0		0	0		0	0		0	0
28		0	0		0	0		0	0		0	0
29		0	0		0	0		0	0		0	0
30		0	0		0	0		0	0		0	0
31	DCB area	DCB ng/inj.		DCB area	DCB ng/inj.		DCB area	DCB ng/inj.		DCB area	DCB ng/inj.	
32	2188.14	0.0071572	1		0	0	1783.99	0.0046784	1	2021.42	0.0061346	1
33												
34	Total ng PCB	8.54146		Total ng PCB	0		Total ng PCB	7.037621		Total ng PCB	6.0397997	
35												
36	g used	1.3		g used	2.1		g used	1.3		g used	2.1	
37	mL total vol.	10		mL total vol.	10		mL total vol.	10		mL total vol.	10	
38												
39	ppm PCB	328.51769		ppm PCB	0		ppm PCB	270.67773		ppm PCB	143.80476	
40							florisil slurry	cleanup tried				
41	ul DCB used	5		ul DCB used	5		ul DCB used	5		ul DCB used	5	
42	conc (ng/ul)	96.8		conc (ng/ul)	96.8		conc (ng/ul)	96.8		conc (ng/ul)	96.8	
43	DCB %R	73.937521		DCB %R	0		DCB %R	48.330674		DCB %R	63.374182	
44							DCB recovery	not acceptable				
45	Homolog	ppm		Homolog	ppm		Homolog	ppm		Homolog	ppm	
46	mono	1.5217629		mono	0		mono	0.5260596		mono	0.0275502	
47	di	13.7868		di	0		di	11.387858		di	6.4408271	
48	tri	16.119098		tri	0		tri	22.834208		tri	19.190827	
49	tetra	210.45857		tetra	0		tetra	167.51002		tetra	85.269524	
50	penta	85.993223		penta	0		penta	68.419586		penta	32.876026	
51	hexa	0.5985295		hexa	0		hexa	0		hexa	0	
52	hepta	0.0397035		hepta	0		hepta	0		hepta	0	
53	octa	0		octa	0		octa	0		octa	0	

NBWM2/22, Webb McCall Calculations for New Bedford

	BG	BH	BI	BJ	BK	BL	BM	BN	BO	BP	BQ	BR
1	SAMPLE #	R7007880222		SAMPLE #	R7007880222		SAMPLE #	R7007880222		SAMPLE #	R7007880222	
2		1502SJR-REINT			1502SJR			1502SJR			1600STG	
3	dilution used	1		dilution used	0.1		dilution used	1		dilution used	1	
4	inj.vol	2		inj.vol	2		inj.vol	2		inj.vol	2	
5	Peak Area	ng/injection		Peak Area	ng/injection		Peak Area	ng/injection		Peak Area	ng/injection	
6	683.92	0.09125715	1	109.43	0.00843086	1	43.1697	0.00150322	0	415.8	0.05251431	1
7		0	0	582.39	0.12578666	1	1424.39	0.35560073	2	930.04	0.22067367	1
8	4664.08	0.64793164	1	501.91	0.02690606	1	10468	1.55936053	2	217.42	0.01058734	0
9	4109.04	0.34934349	1	975.35	0.050603	1	14645	1.47693574	2	195.58	0.00792055	0
10	14796	1.0687679	2	476.68	0.00885442	0	29470	2.19023979	2	1443.23	0.05247185	1
11	4620.42	0.14619115	1	1111.45	0.022844	0	28160	1.37838369	2	1181.32	0.02497203	1
12		0	0	875.86	0.02710007	1		0	0		0	0
13	3010.03	0.14721566	1	1927.18	0.07551189	1	51293	3.71565857	2		0	0
14		0	0		0	0		0	0		0	0
15		0	0	3664.06	0.15231112	1		0	0		0	0
16	275806	17.454756	2	32823	1.96722162	2	410720	26.0540621	2	54858	3.37171419	2
17		0	0	907.48	0.01990806	1		0	0		0	0
18		0	0		0	0		0	0	1365.75	0.05179531	1
19		0	0	1027.06	0.01723143	1	also	0	0	2405.83	0.05882397	1
20		0	0		0	0	too concentrated	0	0		0	0
21		0	0	903.98	0.01347054	0		0	0		0	0
22		0	0		0	0		0	0	972.08	0.01346928	1
23		0	0		0	0		0	0		0	0
24		0	0		0	0		0	0		0	0
25		0	0	488.67	0.00413318	0		0	0	459.94	0.00389018	0
26		0	0		0	0		0	0	435.33	0.00274899	0
27		0	0		0	0		0	0		0	0
28		0	0	147.84	0.00061204	0		0	0	235.83	0.0009763	0
29		0	0		0	0		0	0		0	0
30		0	0		0	0		0	0	25.8906	6.3415E-05	0
31	DCB area	DCB ng/inj.		DCB area	DCB ng/inj.		DCB area	DCB ng/inj.		DCB area	DCB ng/inj.	
32	7647.37	0.05417944	1	2198.24	0.0072191	1	7963.93	0.0573563	1	2797.3	0.01089327	1
33												
34	Total ng PCB	19.905463		Total ng PCB	2.52092492		Total ng PCB	36.7317444		Total ng PCB	3.87262139	
35												
36	g used	1.7		g used	1.7		g used	1.7		g used	1.2	
37	mL total vol.	10		mL total vol.	10		mL total vol.	10		mL total vol.	10	
38												
39	ppm PCB	58.5454793		ppm PCB	74.1448507		ppm PCB	108.034542		ppm PCB	16.1359225	
40												
41	ul DCB used	5		ul DCB used	5		ul DCB used	5		ul DCB used	5	
42	conc (ng/ul)	96.8		conc (ng/ul)	96.8		conc (ng/ul)	96.8		conc (ng/ul)	96.8	
43	DCB %R	55.9704946		DCB %R	74.5774545		DCB %R	59.2523771		DCB %R	11.2533752	
44												
45	Homolog	ppm		Homolog	ppm		Homolog	ppm		Homolog	ppm	
46	mono	0.26840338		mono	0.24796657		mono	0.00442123		mono	0.21880963	
47	di	2.16255152		di	4.86304327		di	6.71822115		di	0.97183811	
48	tri	4.34401963		tri	2.84560982		tri	13.7538979		tri	0.34743458	
49	tetra	36.8826247		tetra	48.3664238		tetra	65.3354197		tetra	9.97465448	
50	penta	14.8878801		penta	17.1740898		penta	22.2225824		penta	4.47134235	
51	hexa	0		hexa	0.52030877		hexa	0		hexa	0.09340786	
52	hepta	0		hepta	0.10940759		hepta	0		hepta	0.05410328	
53	octa	0		octa	0.01800111		octa	0		octa	0.00433217	

NBWM2/22-70, Webb McCall Calculations for New Bedford

	A	B	C	D	E	F	G	H	I	J
1	STANDARDS (1:1 mixtures of aroclors 1242 and 1260)							SAMPLE #	R70078802	
2									171410SJRA	
3	Total PCB Conc (ng/ul)		0.2		1		10	dilution used	0.01	
4	inj. Vol.		2		2		2	inj.vol	2	
5	peak ID	Peak Area	ng/injection	Peak Area	ng/injection	Peak Area	ng/injection	Peak Area	ng/injection	
6	11	63.18	0.0022	128.5	0.011	813.63	0.11	161.42	0.0157569	1
7	16	128.27	0.0058	227.78	0.029	1184.04	0.29	1000	0.2397684	1
8	21	464.11	0.0226	1257.67	0.113	7733.86	1.13	1505.84	0.1519718	1
9	28	543.24	0.022	1872.67	0.11	11123	1.1	3315.33	0.2643981	1
10	32	656.79	0.0122	1609.77	0.061	8793.21	0.61	1619.78	0.061765	1
11	37	1119.04	0.023	4024.55	0.115	23797	1.15	11928	0.5287105	1
12	40	763.02	0.0222	2807.93	0.111	18056	1.11	2199.4	0.0845746	1
13	47	621.16	0.0176	2208.81	0.088	12925	0.88	6937.09	0.4374523	1
14	54	496.14	0.0136	1804.11	0.068	10447	0.68	3381.33	0.1796824	1
15	58	529.7	0.0112	1792.37	0.056	11587	0.56	3376.38	0.137508	1
16	70 (deleted)									
17	78	423.1	0.0072	1520.84	0.036	9170	0.36	2500	0.0774749	1
18	84	605.79	0.0148	1821.88	0.074	10602	0.74	2873.23	0.1537482	1
19	98+104	913.31	0.0138	2743.16	0.069	15440	0.69	5233.01	0.1907781	1
20	117+125	2273.02	0.0312	6390.38	0.156	34711	1.56	4759.37	0.106563	1
21	146	2026.66	0.0302	6650.81	0.151	37365	1.51	2705	0.0479208	1
22	160	798.19	0.0098	2655.91	0.049	16169	0.49		0	0
23	174	1907.23	0.0248	6102.88	0.124	37156	1.24	2149.94	0.0305385	1
24	203	2238.92	0.0186	7302.64	0.093	43294	0.93	1331.45	0.0110611	0
25	232+244	2317.33	0.0196	7432.33	0.098	44594	0.98	846.4	0.0071589	0
26	280	3483.92	0.022	11286	0.11	70030	1.1	959.85	0.0060612	0
27	332	1979.57	0.0084	5596	0.042	30888	0.42	989.31	0.004198	0
28	372	1932.43	0.008	6173.43	0.04	38892	0.4	468.79	0.0019407	0
29	448	637.46	0.0012	2074.41	0.006	13261	0.06		0	0
30	528	1224.81	0.003	4286.55	0.015	25641	0.15	127.76	0.0003129	0
31		Peak Area	ng/injection	Peak Area	ng/injection	Peak Area	ng/injection	DCB area	DCB ng/inj.	
32	DCB	1083.15	0.00038	4177.77	0.01936	21540	0.1936		0	0
33										
34	The detection limit for this analysis is 0.1 ng/injection							Total ng PCB	2.7393445	
35	These analyses are accurate to no more than 2 significant digits									
36								g used*	3.6	
37				1083.15	0.00038	1083.15		mL total vol.	10	
38				4177.77	0.01936	4177.77		*as received, 61% moisture.		
39				21540	0.1936	21540		ppm PCB	380.46451	
40										
41								ul DCB used		
42								conc (ng/ul)		
43								DCB %R	#DIV/0!	
44										
45		Homolog	ng/inj	Homolog	ng/inj	Homolog	ng/inj	Homolog	ppm	
46		mono	0.0022	mono	0.011	mono	0.11	mono	2.1884553	
47		di	0.0339	di	0.1695	di	1.695	di	63.588857	
48		tri	0.078388	tri	0.39194	tri	3.9194	tri	129.53388	
49		tetra	0.045112	tetra	0.22556	tetra	2.2556	tetra	107.33645	
50		penta	0.030266	penta	0.15133	penta	1.5133	penta	43.070502	
51		hexa	0.093254	hexa	0.46627	hexa	4.6627	hexa	30.730967	
52		hepta	0.06968	hepta	0.3484	hepta	3.484	hepta	3.7023831	
53		octa	0.0122	octa	0.061	octa	0.61	octa	0.313008	

NBWM2/22-70, Webb McCall Calculations for New Bedford

	W	X	Y	Z	AA	AB	AC	AD	AE	AF	AG	AH
1	SAMPLE #	R7007880222		SAMPLE #	HXBKF22B		SAMPLE #	HXBKF22A		SAMPLE #	R7007880222	
2		1000SJR									1102SJR	
3	dilution used	0.1		dilution used	1		dilution used	1		dilution used	0.1	
4	inj.vol	2		inj.vol	2		inj.vol	2		inj.vol	2	
5	Peak Area	ng/injection		Peak Area	ng/injection		Peak Area	ng/injection		Peak Area	ng/injection	
6	301.59	0.0360112	1		0	0	189.78	0.0198548	1	136.43	0.0121459	1
7	347.69	0.061728	1	70.17	0.0031729	0	35.35	0.0015984	0		0	0
8	4681.38	0.6506484	1		0	0	128.58	0.0062612	0	2310.43	0.278322	1
9	5447.91	0.4926337	1		0	0	174.32	0.0070596	0	4050.75	0.3431051	1
10	4847.28	0.3084292	1		0	0	1090.24	0.034396	1	1834.59	0.078182	1
11	2436.49	0.0647157	1		0	0	254.87	0.0052384	0	12023	0.5336834	1
12	6665.45	0.3637312	1		0	0	514.17	0.0149597	0	2838.23	0.1129851	1
13	4737.95	0.2749208	1	59.05	0.0016731	0	127.77	0.0036202	0	7270.64	0.462104	1
14		0	0	32.17	0.0008818	0	120.32	0.0032982	0	5420.2	0.3240541	1
15	6665.45	0.3067529	1	101.89	0.0021544	0	218.08	0.0046111	0	929.24	0.0253758	1
16												
17	500	0.0092175	1		0	0	50	0.0008509	0	500	0.0092175	1
18	691.84	0.018989	1		0	0	54.77	0.0013381	0	445.19	0.0108764	0
19	1451.27	0.0300283	1		0	0	265.1	0.0040056	0	924.93	0.0141505	1
20	677.68	0.009302	0	99.94	0.0013718	0	754.06	0.0103504	0	1007.04	0.0138229	0
21	828.5	0.0123458	0		0	0	233.51	0.0034796	0		0	0
22		0	0		0	0	555.88	0.006825	0		0	0
23		0	0		0	0		0	0	771.2	0.010028	0
24		0	0	16.92	0.0001406	0	1403.57	0.0116603	0	867.39	0.0072059	0
25		0	0		0	0		0	0	498.37	0.0042152	0
26		0	0		0	0		0	0	370.55	0.0023399	0
27		0	0		0	0	580.94	0.0024651	0	523.19	0.0022201	0
28		0	0		0	0	589.52	0.0024405	0		0	0
29		0	0		0	0	217.14	0.0004088	0		0	0
30		0	0		0	0		0	0		0	0
31	DCB area	DCB ng/inj.		DCB area	DCB ng/inj.		DCB area	DCB ng/inj.		DCB area	DCB ng/inj.	
32	6583.14	0.0434993	1		0	0		0	0	2103.8	0.0066399	1
33												
34	Total ng PCB	2.6394537		Total ng PCB	0.0093946		Total ng PCB	0.144722		Total ng PCB	2.2440339	
35												
36	g used	1.4		g used	1		g used	1		g used	0.9	
37	mL total vol.	10		mL total vol.	1		mL total vol.	1		mL total vol.	10	
38												
39	ppm PCB	94.266203		ppm PCB	0.0046973		ppm PCB	0.072361		ppm PCB	124.66855	
40												
41	ul DCB used	5		ul DCB used			ul DCB used			ul DCB used	5	
42	conc (ng/ul)	484		conc (ng/ul)			conc (ng/ul)			conc (ng/ul)	96.8	
43	DCB %R	89.874538		DCB %R	#DIV/0!		DCB %R	#DIV/0!		DCB %R	68.593759	
44												
45	Homolog	ppm		Homolog	ppm		Homolog	ppm		Homolog	ppm	
46	mono	1.2861136		mono	0		mono	0.0099274		mono	0.6747706	
47	di	29.84053		di	0.0015864		di	0.0048123		di	20.227684	
48	tri	39.512548		tri	0.0001455		tri	0.0304886		tri	60.506512	
49	tetra	21.10326		tetra	0.0022092		tetra	0.005646		tetra	39.656309	
50	penta	1.5336947		penta	8.231E-05		penta	0.0028591		penta	1.2781408	
51	hexa	0.9900575		hexa	0.0006106		hexa	0.009017		hexa	1.5007446	
52	hepta	0		hepta	6.325E-05		hepta	0.0081859		hepta	0.8243896	
53	octa	0		octa	0		octa	0.0014246		octa	0	

NBWM2/22-70, Webb McCall Calculations for New Bedford

	AU	AV	AW	AX	AY	AZ	BA	BB	BC	BD	BE	BF
1	SAMPLE #	R7007880222		SAMPLE #	R7007880222		SAMPLE #	HXBKF22C		SAMPLE #	R7007880222	
2		1302SJR			1400SJR						1400SJRA	
3	dilution used	1		dilution used	0.1		dilution used	1		dilution used	1	
4	inj.vol	2		inj.vol	2		inj.vol	2		inj.vol	2	
5	Peak Area	ng/injection		Peak Area	ng/injection		Peak Area	ng/injection		Peak Area	ng/injection	
6		0	0	117.14	0.00946957	1		0	0	1284.9	0.17809763	2
7	10067	2.7145002	2	95.83	0.00433316	0	55.44	0.00250684	0	1039.63	0.25058498	1
8	42115	6.52910339	2	247.79	0.01206622	0	206.16	0.01003903	0	1791.58	0.19684351	1
9	83627	8.85961074	2	90.14	0.00365047	0		0	0	804	0.03926069	1
10	67159	5.07065098	2	188.73	0.0035057	0	47.18	0.00087638	0	4700.3	0.29719616	1
11	80793	4.13348763	2	71.13	0.00146196	0	11.73	0.00024109	0		0	0
12	52645	3.37614981	2	58.65	0.00170642	0	13.82	0.00040209	0		0	0
13		0	0	321.56	0.00911111	0		0	0		0	0
14	50773	3.53546987	2		0	0	121.23	0.00332311	0		0	0
15		0	0		0	0	257.03	0.00543465	0		0	0
16												
17		0	0	168.43	0.00286622	0		0	0	1500	0.03545325	1
18		0	0	184.81	0.00451508	0		0	0	1816.94	0.07375952	1
19		0	0	526	0.00794779	0		0	0	2775.98	0.07060522	1
20		0	0	251.71	0.00345503	0		0	0	2362.65	0.03391675	1
21		0	0	988.04	0.01472314	0	794.87	0.01184465	0	1397.32	0.02082198	0
22		0	0		0	0	506.18	0.00621477	0		0	0
23		0	0	289.73	0.0037674	0		0	0	382.75	0.00497696	0
24		0	0	419.55	0.00348544	0	108.85	0.00090428	0		0	0
25		0	0	200.48	0.00169566	0		0	0	217.19	0.001837	0
26		0	0		0	0		0	0		0	0
27		0	0		0	0	417.76	0.0017727	0	61.47	0.00026084	0
28		0	0		0	0	133.23	0.00055155	0	34.66	0.00014349	0
29		0	0		0	0		0	0		0	0
30		0	0		0	0		0	0		0	0
31	DCB area	DCB ng/inj.		DCB area	DCB ng/inj.		DCB area	DCB ng/inj.		DCB area	DCB ng/inj.	
32	7156.67	0.04925498	1	1978.8	0.00587322	1		0	0	7579.45	0.05349782	1
33												
34	Total ng PCB	34.2189726		Total ng PCB	0.08776036		Total ng PCB	0.04411114		Total ng PCB	1.20375795	
35												
36	g used	2.1		g used	0.5		g used	1		g used	0.5	
37	mL total vol.	10		mL total vol.	10		mL total vol.	1		mL total vol.	10	
38												
39	ppm PCB	81.4737444		ppm PCB	8.77603595		ppm PCB	0.02205557		ppm PCB	12.0375795	
40												
41	ul DCB used	5		ul DCB used	5		ul DCB used			ul DCB used	5	
42	conc (ng/ul)	96.8		conc (ng/ul)	96.8		conc (ng/ul)			conc (ng/ul)	96.8	
43	DCB %R	50.8832448		DCB %R	60.6737888		DCB %R	#DIV/0!		DCB %R	55.2663454	
44												
45	Homolog	ppm		Homolog	ppm		Homolog	ppm		Homolog	ppm	
46	mono	0		mono	0.94695652		mono	0		mono	1.78097631	
47	di	27.2821578		di	1.73119949		di	0.00627294		di	4.57243655	
48	tri	48.5516703		tri	0.94119216		tri	0.00130809		tri	3.26641682	
49	tetra	5.63991622		tetra	1.19773243		tetra	0.00383057		tetra	0.35453248	
50	penta	0		penta	1.15472048		penta	0.00029612		penta	1.31118489	
51	hexa	0		hexa	2.33793536		hexa	0.00722511		hexa	0.73145626	
52	hepta	0		hepta	0.46629951		hepta	0.00284697		hepta	0.01914134	
53	octa	0		octa	0		octa	0.00027578		octa	0.00143488	

NBWM2/22-70, Webb McCall Calculations for New Bedford

	BS	BT	BU	BV	BW	BX	BY	BZ	CA	CB	CC	CD
1	SAMPLE #	HEXANE		SAMPLE #	R7007880222		SAMPLE #	R700788022		SAMPLE #		
2					1502SJR			1600STG-REINT				
3	dilution used	1		dilution used	0.1		dilution used	1		dilution used		
4	inj.vol	4		inj.vol	2		inj.vol	2		inj.vol		
5	Peak Area	ng/injection		Peak Area	ng/injection		Peak Area	ng/injection		Peak Area	ng/injection	
6	34.9418	0.00121671	0	109.43	0.00843086	1	402.86	0.05064451	1		0	0
7	322.82	0.05494006	1	533.02	0.11231169	1	786.87	0.18159709	1		0	0
8	113.85	0.00554397	0	418.67	0.02038728	0	73.7645	0.00359199	0		0	0
9		0	0	623.52	0.02731404	1	21.0192	0.00085123	0		0	0
10	189.08	0.0035122	0	763.3	0.01765414	1	739.83	0.01645229	1		0	0
11	196.14	0.00403133	0	299.74	0.00616066	0	162.25	0.00333478	0		0	0
12	61.2022	0.00178067	0	434.71	0.01264785	0		0	0		0	0
13	17.7359	0.00050253	0	148.92	0.00421951	0		0	0		0	0
14	66.7408	0.00182947	0		0	0		0	0		0	0
15	275.66	0.00582857	0		0	0		0	0		0	0
16												
17		0.00348973	0		0	0		0	0		0	0
18	205.07	0.00501005	0		0	0	85.2812	0.0020835	0		0	0
19	290.85	0.00439471	0		0	0	75.8802	0.00114654	0		0	0
20	731.21	0.01003676	0		0	0		0	0		0	0
21	833.78	0.01242446	0		0	0		0	0		0	0
22		0	0		0	0		0	0		0	0
23		0	0		0	0		0	0		0	0
24	481.63	0.00400118	0		0	0		0	0		0	0
25	707.94	0.00598776	0		0	0	112.96	0.00095542	0		0	0
26		0	0		0	0	200.97	0.00126907	0		0	0
27		0	0		0	0		0	0		0	0
28	338.54	0.00140151	0		0	0	134.48	0.00055673	0		0	0
29		0	0		0	0		0	0		0	0
30		0	0		0	0	25.8906	6.3415E-05	0		0	0
31	DCB area	DCB ng/inj.		DCB area	DCB ng/inj.		DCB area	DCB ng/inj.		DCB area	DCB ng/inj.	
32	201.32	7.0629E-05	0	2198.24	0.0072191	1	2797.3	0.01089327	1		0	0
33												
34	Total ng PCB	0.12593166		Total ng PCB	0.20912604		Total ng PCB	0.26254655		Total ng PCB	0	
35												
36	g used	1.53		g used	1.7		g used	1.2		g used		
37	mL total vol.	10		mL total vol.	10		mL total vol.	10		mL total vol.		
38												
39	ppm PCB	0.20577069		ppm PCB	6.15076575		ppm PCB	1.09394397		ppm PCB	#DIV/0!	
40												
41	ul DCB used	5		ul DCB used	5		ul DCB used	5		ul DCB used		
42	conc (ng/ul)	96.8		conc (ng/ul)	96.8		conc (ng/ul)	96.8		conc (ng/ul)		
43	DCB %R	0.03648183		DCB %R	74.5774545		DCB %R	11.2533752		DCB %R	#DIV/0!	
44												
45	Homolog	ppm		Homolog	ppm		Homolog	ppm		Homolog	ppm	
46	mono	0.00198809		mono	0.24796657		mono	0.21101877		mono	#DIV/0!	
47	di	0.0988301		di	4.10374958		di	0.77250784		di	#DIV/0!	
48	tri	0.0162221		tri	1.6749463		tri	0.08510623		tri	#DIV/0!	
49	tetra	0.01804996		tetra	0.12410329		tetra	0		tetra	#DIV/0!	
50	penta	0.01648327		penta	0		penta	0.0122164		penta	#DIV/0!	
51	hexa	0.03721749		hexa	0		hexa	0.00164018		hexa	#DIV/0!	
52	hepta	0.01468962		hepta	0		hepta	0.00887061		hepta	#DIV/0!	
53	octa	0.00229005		octa	0		octa	0.00258394		octa	#DIV/0!	

NBWM2/24, Webb McCall Calculations for New Bedford

	K	L	M	N	O	P	Q	R	S	T	U	V
1	SAMPLE #	R7007880224		SAMPLE #	R7007880224		SAMPLE #	R7007880224		SAMPLE #	R7007880224	
2		0700STG			0802STG			0900STG			1002SJR	
3	dilution used	0.01		dilution used	0.01		dilution used	0.01		dilution used	0.02	
4	inj.vol	2		inj.vol	2		inj.vol	2		inj.vol	2	
5	Peak Area	ng/injection		Peak Area	ng/injection		Peak Area	ng/injection		Peak Area	ng/injection	
6	90.76	0.0082932	1	88.3317	0.00805506	1	68.49	0.00610915	1	166	0.0175692	1
7		0	0		0	0	210.03	0.02092422	1	598.77	0.11286833	1
8	1721.98	0.2133465	1	1715.31	0.21240425	1	1021.03	0.11433066	1	826.67	0.08831439	1
9	2274.51	0.1837154	1	2325.55	0.18856701	1	1827.67	0.14124087	1	1283.22	0.09163702	1
10	1055.72	0.0453107	1	1006.06	0.04243953	1	839.07	0.03278465	1	592.94	0.01855411	1
11	8776.58	0.363473	1	9761.23	0.40745252	1	8711.71	0.36057557	1	3946.05	0.14771676	1
12	1466.2	0.066776	1	1658.06	0.07704098	1	1539.88	0.07071808	1	914	0.03723202	1
13	4909.24	0.3000526	1	5772.75	0.35745132	1	5648.44	0.34918826	1	2593.26	0.14610602	1
14	2298.58	0.1223779	1	2722.03	0.14845061	1	2715.18	0.14802885	1		0	0
15	2270.72	0.0964404	1	2716.5	0.11732154	1	2778.9	0.12024447	1	2189.44	0.0926331	1
16	5703.63	0.2673113	1	7111.36	0.34362201	1	10233	0.51284089	1	9943.62	0.49715408	1
17	2000	0.06529	1	2500	0.08296063	1	2000	0.06529005	1		0	0
18	1929.26	0.1071261	1	2315.61	0.13512865	1	1987.64	0.11135749	1		0	0
19	3750.07	0.1435019	1	4587.23	0.18046929	1	4088.97	0.15846706	1	467.24	0.00821746	0
20	3260.35	0.084756	1	4003.67	0.11451035	1	2208.55	0.0426535	1	488.54	0.00792878	0
21	2350.85	0.0447724	1	2640.3	0.05484803	1	1755.03	0.02743058	0	313.06	0.00489303	0
22		0	0		0	0		0	0	329.46	0.0041614	0
23	1697.28	0.0227761	0	1918.85	0.02693834	1	754.7	0.01012746	0	329.46	0.00442109	0
24	1016.06	0.0087979	0	1067.62	0.00924437	0	879.98	0.00761962	0	47.82	0.00041407	0
25	562.42	0.0050359	0	455.18	0.00407571	0	380.69	0.00340872	0	145.56	0.00130335	0
26	605.87	0.0041099	0	443.6	0.00300917	0	570.19	0.0038679	0	42	0.00028491	0
27	295.35	0.0017686	0	137.87	0.00082557	0	313.49	0.00187719	0		0	0
28	141.48	0.0020345	0		0	0	327.28	0.00470627	0	52.95	0.00076142	0
29		0	0		0	0		0	0		0	0
30	111.44	0.0002998	0	36.45	9.8073E-05	0		0	0		0	0
31	DCB area	DCB ng/inj.		DCB area	DCB ng/inj.		DCB area	DCB ng/inj.		DCB area	DCB ng/inj.	
32	1057.31	0.002516	0	2645.59	0.01049731	1	1444.77	0.00343807	0	2244.27	0.00678564	1
33												
34	Total ng PCB	2.1573662		Total ng PCB	2.51491304		Total ng PCB	2.31379149		Total ng PCB	1.28217054	
35												
36	g used	1.4		g used	1.3		g used	1.8		g used	2.4	
37	mL total vol.	10		mL total vol.	10		mL total vol.	10		mL total vol.	10	
38												
39	ppm PCB	770.48794		ppm PCB	967.274244		ppm PCB	642.719858		ppm PCB	133.559431	
40												
41	ul DCB used	low but OK 5		ul DCB used	10		ul DCB used	5		ul DCB used	5	
42	conc (ng/ul)	484		conc (ng/ul)	484		conc (ng/ul)	484		conc (ng/ul)	484	
43	DCB %R	51.984365		DCB %R	108.443333		DCB %R	71.0344658		DCB %R	70.0995994	
44				should have used 5 ul								
45	Homolog	ppm		Homolog	ppm		Homolog	ppm		Homolog	ppm	
46	mono	2.9618618		mono	3.09810183		mono	1.69698602		mono	1.83012541	
47	di	92.598321		di	99.8253861		di	47.3791956		di	23.3429138	
48	tri	233.47536		tri	275.902691		tri	171.905131		tri	28.3573601	
49	tetra	261.98831		tetra	346.602704		tetra	277.227537		tetra	61.6373453	
50	penta	108.30254		penta	148.003829		penta	106.621365		penta	15.7762197	
51	hexa	63.781791		hexa	87.7181157		hexa	32.2294035		hexa	2.12872662	
52	hepta	6.5460623		hepta	6.08569703		hepta	4.35294268		hepta	0.40742583	
53	octa	0.8336847		octa	0.03772024		octa	1.30729763		octa	0.07931444	

NBWM2/24, Webb McCall Calculations for New Bedford

	AH	AI	AJ	AK	AL	AM	AN	AO	AP	AQ	AR
1	4	SAMPLE #	R7007880224		SAMPLE #	R7007880224		SAMPLE #	R7007880224		SAMPLE #
2			1300SJR			1700SJR			1702SJR		
3		dilution used	0.1		dilution used	1		dilution used	1		dilution used
4		inj.vol	2		inj.vol	2		inj.vol	2		inj.vol
5		Peak Area	ng/injection		Peak Area	ng/injection		Peak Area	ng/injection		Peak Area
6	1	300.42	0.03610473	1	10241	1.40683726	2	5564.82	0.76202659	2	1182.14
7	1	254.46	0.02664408	1	4497.25	1.11577925	2	6000.03	1.50237979	2	496.1
8	1	299.76	0.02026193	0	1751.88	0.21757011	1	13433.96	1.86777392	2	186.7
9	1	107.46	0.00508533	0	1435.08	0.10455978	1	6630.39	0.59776487	1	64.31
10	0	1077.28	0.04655727	1	9869.27	0.65014616	2	19401	1.30753988	2	377.65
11	0		0	0		0	0		0	0	
12	0		0	0		0	0		0	0	
13	0		0	0		0	0		0	0	
14	0		0	0		0	0		0	0	
15	0		0	0		0	0		0	0	
16	2	36190	1.91992642	2	254828	13.7716013	2	384395	20.7955368	2	27728
17	0		0	0		0	0		0	0	200
18	0		0	0		0	0		0	0	277.62
19	0		0	0		0	0		0	0	
20	0	226.26	0.0036721	0	3240.49	0.08396102	1	4593.91	0.13813706	1	392.61
21	0	114.62	0.00179148	0	2597.88	0.05337141	1	5408.93	0.15124243	1	162
22	0		0	0		0	0		0	0	
23	0		0	0	908.19	0.01218717	0	1561.05	0.02094802	0	153
24	0		0	0		0	0	1378.46	0.01193589	0	
25	0		0	0	689.88	0.00617723	0	1726.02	0.01545489	0	
26	0		0	0	250.8	0.00170131	0	923.52	0.00626472	0	
27	0		0	0	149.78	0.00089689	0	528.16	0.00316263	0	
28	0		0	0		0	0	866.28	0.01048605	1	
29	0		0	0		0	0		0	0	
30	0		0	0	461.19	0.00124088	0	593.04	0.00159564	0	
31		DCB area	DCB ng/inj.		DCB area	DCB ng/inj.		DCB area	DCB ng/inj.		DCB area
32	0	2066.26	0.00513929	1	8114.25	0.06766353	1	7706.1	0.06192655	1	2192.69
33											
34		Total ng PCB	2.06004334		Total ng PCB	17.4260298		Total ng PCB	27.1922492		Total ng PCB
35											
36		g used	0.7		g used	1.7		g used	1.6		g used
37		mL total vol.	10		mL total vol.	10		mL total vol.	10		mL total vol.
38											
39		ppm PCB	147.145953		ppm PCB	51.2530288		ppm PCB	84.9757789		ppm PCB
40					INVALID, NEEDS DILUTION			INVALID, NEEDS DILUTION			
41		ul DCB used	5		ul DCB used	5		ul DCB used	5		ul DCB used
42		conc (ng/ul)	96.8		conc (ng/ul)	96.8		conc (ng/ul)	96.8		conc (ng/ul)
43		DCB %R	53.0918051		DCB %R	69.9003363		DCB %R	63.9737104		DCB %R
44											
45		Homolog	ppm		Homolog	ppm		Homolog	ppm		Homolog
46		mono	2.5789092		mono	4.13775664		mono	2.38133309		mono
47		di	3.44123886		di	3.99849796		di	10.9987342		di
48		tri	3.59794794		tri	2.14284115		tri	5.48707352		tri
49		tetra	97.3676973		tetra	28.7583439		tetra	46.1400974		tetra
50		penta	39.8077778		penta	11.7838479		penta	18.9213883		penta
51		hexa	0.35238188		hexa	0.40409831		hexa	0.90290006		hexa
52		hepta	0		hepta	0.02399324		hepta	0.10649707		hepta
53		octa	0		octa	0.00364965		octa	0.03775528		octa

	K	L	M	N	O	P	Q	R	S	T	U	V
1	SAMPLE #	R70078804		SAMPLE #	HXBKL20		SAMPLE #			SAMPLE #		
2		051800DRG			hexane blank							
3	dilution used	1		dilution used	1		dilution used			dilution used		
4	inj.vol	2		inj.vol	2		inj.vol			inj.vol		
5	Peak Area	ng/injection		Peak Area	ng/injection		Peak Area	ng/injection		Peak Area	ng/injection	
6	37.01	0.0030821	1		0	0		0	0		0	0
7	194.91	0.0058205	1	180.17	0.00581834	1		0	0		0	0
8		0	0		0	0		0	0		0	0
9		0	0		0	0		0	0		0	0
10	38.54	0.0020027	0		0	0		0	0		0	0
11		0	0	50.25	0.0029792	0		0	0		0	0
12		0	0		0	0		0	0		0	0
13		0	0		0	0		0	0		0	0
14		0	0		0	0		0	0		0	0
15		0	0	28.31	0.00091155	0		0	0		0	0
16		0	0		0	0		0	0		0	0
17		0	0		0	0		0	0		0	0
18	73.81	0.0023288	0		0	0		0	0		0	0
19		0	0	51.19	0.00104657	0		0	0		0	0
20		0	0		0	0		0	0		0	0
21		0	0	225.38	0.00631592	0		0	0		0	0
22		0	0		0	0		0	0		0	0
23		0	0		0	0		0	0		0	0
24	234.48	0.0034349	0	345.18	0.00505659	0		0	0		0	0
25	334.44	0.0045542	0	332.14	0.0045229	0		0	0		0	0
26	65.56	0.0007574	0	263.97	0.00304948	0		0	0		0	0
27		0	0		0	0		0	0		0	0
28	103.17	0.0006636	0	553.91	0.00356267	0		0	0		0	0
29		0	0		0	0		0	0		0	0
30	69.89	0.0002842	0		0	0		0	0		0	0
31	DCB area	DCB ng/inj.		DCB area	DCB ng/inj.		DCB area	DCB ng/inj.		DCB area	DCB ng/inj.	
32	6475.62	0.0866038	1	537.37	0.00175787	0		0	0		0	0
33												
34	Total ng PCB	0.0229283		Total ng PCB	0.0332632		Total ng PCB	0		Total ng PCB	0	
35		[illegible]										
36		1			1		g used			g used		
37	mL extract	30		mL extract	30		mL total vol.			mL total vol.		
38												
39	total µg PCB	0.3439252		total µg PCB	0.49894796		ppm PCB	#DIV/0!		ppm PCB	#DIV/0!	
40		Report <1										
41	ul DCB used	5		ul DCB used	n.a.		ul DCB used			ul DCB used		
42	conc (ng/ul)	296		conc (ng/ul)			conc (ng/ul)			conc (ng/ul)		
43	DCB %R	87.774129		DCB %R	#VALUE!		DCB %R	#DIV/0!		DCB %R	#DIV/0!	
44												
45	Homolog	µg in trap		Homolog	µg "in trap"		Homolog	ppm		Homolog	ppm	
46	mono	0.0462308		mono	0		mono	#DIV/0!		mono	#DIV/0!	
47	di	0.0873079		di	0.08727504		di	#DIV/0!		di	#DIV/0!	
48	tri	0.0300401		tri	0.04468797		tri	#DIV/0!		tri	#DIV/0!	
49	tetra	0		tetra	0.01367318		tetra	#DIV/0!		tetra	#DIV/0!	
50	penta	0.0349324		penta	0.01635383		penta	#DIV/0!		penta	#DIV/0!	
51	hexa	0.0119837		hexa	0.10845268		hexa	#DIV/0!		hexa	#DIV/0!	
52	hepta	0.1192141		hepta	0.17506527		hepta	#DIV/0!		hepta	#DIV/0!	
53	octa	0.0142162		octa	0.05343999		octa	#DIV/0!		octa	#DIV/0!	

NBWM2/24-70, Webb McCall Calculations for New Bedford

	A	B	C	D	E	F	G	H	I	J
1	STANDARDS (1:1 mixtures of aroclors 1242 and 1260)							SAMPLE #	HXBKF24B	
2										
3	Total PCB Conc (ng/ul)		0.2		1		10	dilution used	1	
4	inj. Vol.		2		2		2	inj.vol	2	
5	peak ID	Peak Area	ng/injection	Peak Area	ng/injection	Peak Area	ng/injection	Peak Area	ng/injection	
6	11	28.63	0.0022	118.36	0.011	836.31	0.11		0	0
7	16	92.55	0.0058	272.76	0.029	1287.31	0.29	100.23	0.0067887	1
8	21	334.35	0.0226	1011.61	0.113	8211.13	1.13		0	0
9	28	464.89	0.022	1499.01	0.11	11914	1.1		0	0
10	32	483.04	0.0122	1327.08	0.061	9287.18	0.61	53.89	0.0013611	0
11	37	965.12	0.023	3213.56	0.115	26386	1.15		0	0
12	40	633.04	0.0222	2292.78	0.111	19450	1.11		0	0
13	47	477.77	0.0176	1719.11	0.088	13634	0.88	44.94	0.0016555	0
14	54	409.7	0.0136	1415.42	0.068	11355	0.68	25.25	0.0008382	0
15	58	404.73	0.0112	1407.38	0.056	12167	0.56	59.45	0.0016451	0
16	70 (deleted)									
17	78	366.66	0.0072	1171.22	0.036	10339	0.36		0	0
18	84	519.54	0.0148	1472.22	0.074	10661	0.74		0	0
19	98+104	784.66	0.0138	2062.91	0.069	16126	0.69		0	0
20	117+125	1922.42	0.0312	5040.16	0.156	36548	1.56	542.77	0.0088089	0
21	146	1932.22	0.0302	5402.52	0.151	41336	1.51	225.12	0.0035186	0
22	160	775.87	0.0098	2151.52	0.049	17006	0.49		0	0
23	174	1848.1	0.0248	5130.27	0.124	40352	1.24		0	0
24	203	2148.09	0.0186	5916.03	0.093	44977	0.93	329.76	0.0028553	0
25	232+244	2188.95	0.0196	6020.8	0.098	46441	0.98	183.65	0.0016444	0
26	280	3243.15	0.022	9126.42	0.11	73859	1.1	190.17	0.00129	0
27	332	1402.8	0.0084	3996.79	0.042	32499	0.42	53.07	0.0003178	0
28	372	556.33	0.008	4545.95	0.04	36900	0.4		0	0
29	448	556.51	0.0012	1232.53	0.006	11247	0.06		0	0
30	528	1114.99	0.003	2473.54	0.015	22427	0.15		0	0
31		Peak Area	ng/injection	Peak Area	ng/injection	Peak Area	ng/injection	DCB area	DCB ng/inj.	
32	DCB	2033.9	0.00484	6743.77	0.0484	37734	0.484		0	0
33										
34	The detection limit for this analysis is 0.1 ng/injection							Total ng PCB	0.0307236	
35	These analyses are accurate to no more than 2 significant digits									
36								g used	1	
37		1067.01	0.0038	1067.01				mL total vol.	1	
38		2164.91	0.01936	2164.91						
39		18598	0.1936	18598				ppm PCB	0.0153618	
40										
41								ul DCB used		
42								conc (ng/ul)		
43								DCB %R	#DIV/0!	
44										
45		Homolog	ng/inj	Homolog	ng/inj	Homolog	ng/inj	Homolog	ppm	
46		mono	0.0022	mono	0.011	mono	0.11	mono	0	
47		di	0.0339	di	0.1695	di	1.695	di	0.0033944	
48		tri	0.078388	tri	0.39194	tri	3.9194	tri	0.0008188	
49		tetra	0.045112	tetra	0.22556	tetra	2.2556	tetra	0.0019311	
50		penta	0.030266	penta	0.15133	penta	1.5133	penta	0.0006165	
51		hexa	0.093254	hexa	0.46627	hexa	4.6627	hexa	0.0057722	
52		hepta	0.06968	hepta	0.3484	hepta	3.484	hepta	0.0028288	
53		octa	0.0122	octa	0.061	octa	0.61	octa	0	

NBWM2/24-70, Webb McCall Calculations for New Bedford

	W	X	Y	Z	AA	AB	AC	AD	AE	AF	AG
1	SAMPLE #	R7007880224		SAMPLE #	DCBMB		SAMPLE #	HXBKF24C		SAMPLE #	R700788022
2		1100DJR			484PPM						1202SJR
3	dilution used	0.1		dilution used	0.01		dilution used	1		dilution used	0.1
4	inj.vol	2		inj.vol	2		inj.vol	2		inj.vol	2
5	Peak Area	ng/injection		Peak Area	ng/injection		Peak Area	ng/injection		Peak Area	ng/injection
6	376.97	0.04666041	1	37.28	0.00304832	1		0	0	230.89	0.02651706
7	408.12	0.0638223	1	176.82	0.01664881	1	177.71	0.01676339	1	808.32	0.16677651
8	1556.53	0.18997508	1		0	0	63.13	0.0042672	0	1515.01	0.18410999
9	259.39	0.01227512	0		0	0		0	0	4964.22	0.43938658
10	663.2	0.02261634	1	26.69	0.0006741	0	310.37	0.00783892	0		0
11	400	0.00953249	0	40	0.00095325	0		0	0		0
12	16.44	0.00057653	0	5.23	0.00018341	0		0	0		0
13		0	0		0	0	38.31	0.00141126	0		0
14		0	0	80.87	0.00268448	0		0	0		0
15		0	0	46.25	0.00127987	0		0	0		0
16											
17		0	0	20	0.00039273	0		0	0		0
18		0	0	23.66	0.000674	0		0	0		0
19		0	0	80.51	0.00141595	0		0	0		0
20	547.95	0.00889298	0	97.79	0.00158709	0	135.82	0.0022043	0		0
21	240.37	0.00375691	0	22.17	0.00034651	0		0	0	824.5	0.01288668
22		0	0		0	0		0	0		0
23	92.5	0.00124127	0	77.25	0.00103663	0	93.43	0.00125375	0		0
24	81.45	0.00070526	0		0	0		0	0		0
25		0	0		0	0		0	0	215.54	0.00192996
26		0	0		0	0		0	0	95.22	0.00064593
27		0	0		0	0		0	0	46.42	0.00027796
28		0	0		0	0		0	0	100.96	0.0014518
29		0	0		0	0		0	0		0
30		0	0		0	0		0	0		0
31	DCB area	DCB ng/inj.		DCB area	DCB ng/inj.		DCB area	DCB ng/inj.		DCB area	DCB ng/inj.
32	2091.77	0.00537522	1	2033.9	0.00484	1		0	0	2004.75	0.00477063
33											
34	Total ng PCB	0.3600547		Total ng PCB	0.03092515		Total ng PCB	0.03373882		Total ng PCB	0.83398246
35											
36	g used	2.1		g used	1		g used	1		g used	2.8
37	mL total vol.	10		mL total vol.	10		mL total vol.	1		mL total vol.	10
38											
39	ppm PCB	8.57273086		ppm PCB	15.4625745		ppm PCB	0.01686941		ppm PCB	14.892544
40											
41	ul DCB used	5		ul DCB used	5		ul DCB used			ul DCB used	5
42	conc (ng/ul)	96.8		conc (ng/ul)	484		conc (ng/ul)			conc (ng/ul)	96.8
43	DCB %R	55.5291335		DCB %R	100		DCB %R	#DIV/0!		DCB %R	49.2833964
44											
45	Homolog	ppm		Homolog	ppm		Homolog	ppm		Homolog	ppm
46	mono	1.1109621		mono	1.52416137		mono	0		mono	0.47351885
47	di	6.11586088		di	8.32440486		di	0.01051529		di	8.22737762
48	tri	0.99837393		tri	1.34831995		tri	0.00391946		tri	5.88464165
49	tetra	0		tetra	1.73560125		tetra	0.00070563		tetra	0
50	penta	0.02988102		penta	0.96478697		penta	0.00013226		penta	0.01150596
51	hexa	0.30254013		hexa	1.56530008		hexa	0.00159677		hexa	0.22205967
52	hepta	0.01511279		hepta	0		hepta	0		hepta	0.04751527
53	octa	0		octa	0		octa	0		octa	0.025925

	AS	AT	AU	AV	AW
1	R7007880224		SAMPLE #	R7007880224	
2	1700SJR			1702SJR	
3	0.1		dilution used	0.1	
4	2		inj.vol	2	
5	ng/injection		Peak Area	ng/injection	
6	0.1576874	2	639.61	0.08287652	1
7	0.08645576	1	665.2	0.1299579	1
8	0.01261977	0	2056.29	0.26057089	1
9	0.00304334	0	326.89	0.01546942	0
10	0.0095382	0	594.66	0.01865355	1
11	0	0	1000	0.02442719	1
12	0	0	14.73	0.00051656	0
13	0	0		0	0
14	0	0	2722.02	0.14845	1
15	0	0		0	0
16					
17	0.00392734	0		0	0
18	0.00790849	0		0	0
19	0	0	1077.76	0.02645724	1
20	0.00637188	0	1298.44	0.02107309	0
21	0.00253201	0	842.28	0.01316458	0
22	0	0	172.75	0.002182	0
23	0.00205314	0	172.75	0.00231816	0
24	0	0	320.54	0.00277551	0
25	0	0	111.42	0.00099766	0
26	0	0	206.25	0.0013991	0
27	0	0	141.47	0.00084713	0
28	0	0	169.29	0.00243438	0
29	0	0		0	0
30	0	0		0	0
31	DCB ng/inj.		DCB area	DCB ng/inj.	
32	0.0063086	1	2126.86	0.00569976	1
33					
34	0.29213733		Total ng PCB	0.7545709	
35					
36	1.7		g used	1.7	
37	10		mL total vol.	10	
38					
39	8.59227436		ppm PCB	22.1932618	
40					
41	5		ul DCB used	5	
42	96.8		conc (ng/ul)	96.8	
43	65.1714379		DCB %R	58.8817738	
44					
45	ppm		Homolog	ppm	
46	4.63786475		mono	2.43754481	
47	2.93636366		di	11.5998867	
48	0.34766774		tri	3.06434933	
49	0.11551012		tetra	2.92533821	
50	0.25881513		penta	0.66956938	
51	0.29605296		hexa	1.22694209	
52	0		hepta	0.19803187	
53	0		octa	0.07159948	

WMNB 3/01, Webb McCall Calculations for New Bedford

	K	L	M	N	O	P	Q	R	S	T	U	V
1	SAMPLE #	R7007880222		SAMPLE #	R7007880222		SAMPLE #	R7007880222		SAMPLE #	R7007880222	
2		0702SJR			0900SJR			0902SJR			1002SJR	
3	dilution used	0.01		dilution used	0.01		dilution used	0.01		dilution used	0.02	
4	inj.vol	2		inj.vol	2		inj.vol	2		inj.vol	2	
5	Peak Area	ng/injection		Peak Area	ng/injection		Peak Area	ng/injection		Peak Area	ng/injection	
6	161.83	0.003821	1	87.08	0.00128153	0	48.97	0.00072068	0	85.42	0.0012571	0
7	422.8	0.0040407	0		0	0	572.51	0.00547143	0	500	0.00477846	0
8	1187.8	0.1138924	1	1335.4	0.1368812	1		0	0	825.87	0.07575162	1
9	1439.47	0.0964824	1	1833.36	0.1309393	1	451.1	0.02633435	1	1706.53	0.11788453	1
10	720.27	0.0293535	1	851.94	0.03607332	1	197.12	0.00626006	0	764.82	0.03162712	1
11	5955.55	0.2335223	1	7720.36	0.3206135	1	1887.41	0.05449893	1	8164.38	0.34252533	1
12	924.06	0.0334672	1	1456.68	0.05849903	1	371.61	0.01205539	0	1358.84	0.05390079	1
13	3564.38	0.1993422	1	4867.03	0.29267842	1	1175.02	0.04571414	1	5072.12	0.30737333	1
14	1559.21	0.0675329	1	2424.57	0.1254688	1	535.94	0.0203044	1	2401.55	0.12392195	1
15	1559.48	0.0519235	1	2368.46	0.09238007	1	539.97	0.01151038	1	2342.38	0.09103644	1
16	3169.97	0.1141345	1	4560.58	0.18894114	1	1054.96	0.02840212	1	4444.95	0.18212039	1
17	1500	0.0449245	1	1800	0.05648774	1	400	0.01032702	1	1500	0.04492451	1
18	1274.86	0.0567556	1	1564.72	0.07136672	1	347.72	0.01162917	0	1785.79	0.08675122	1
19	2755.47	0.0832452	1	3463.05	0.11655863	1	855.86	0.01471504	1	3490.23	0.11783829	1
20	2715.48	0.0479109	1	2013.22	0.02828855	0	644.81	0.00906048	0	1793.08	0.02519528	0
21	1531.07	0.0267704	0	1450.35	0.025359	0	362.22	0.00633332	0	699.73	0.0122346	0
22		0	0		0	0		0	0		0	0
23	1031.87	0.0180806	0	458.88	0.00804057	0	200.53	0.00351372	0	312.99	0.00548426	0
24	595.8	0.0068863	0	510.63	0.00590192	0	153.33	0.0017722	0	298.82	0.00345379	0
25	432.01	0.0048842	0	291.24	0.00329271	0	144.46	0.00163324	0	177.92	0.00201153	0
26	611.61	0.0037315	0	459.01	0.00280046	0	247.95	0.00151277	0	259.63	0.00158403	0
27	656.42	0.0033996	0	349.71	0.00181114	0		0	0		0	0
28	275.6	0.0016943	0	277.93	0.00170858	0	101.35	0.00062305	0	169.42	0.00104151	0
29		0	0		0	0		0	0		0	0
30	51.15	0.0002572	0		0	0		0	0		0	0
31	DCB area	DCB ng/inj.		DCB area	DCB ng/inj.		DCB area	DCB ng/inj.		DCB area	DCB ng/inj.	
32	632.17	0.0047971	1	606.72	0.00459	1	425.49	0.00311509	1	2777.2	0.02225401	1
33												
34	Total ng PCB	1.2460529		Total ng PCB	1.70537233		Total ng PCB	0.27239188		Total ng PCB	1.63269607	
35												
36	g used	0.8		g used	2.1		g used	0.5		g used	0.5	
37	mL total vol.	10		mL total vol.	10		mL total vol.	10		mL total vol.	10	
38												
39	ppm PCB	778.78306		ppm PCB	406.041032		ppm PCB	272.391878		ppm PCB	816.348036	
40												
41	ul DCB used	5		ul DCB used	5		ul DCB used	5		ul DCB used	10	
42	conc (ng/ul)	484		conc (ng/ul)	484		conc (ng/ul)	484		conc (ng/ul)	484	
43	DCB %R	99.113956	✓	DCB %R	94.8346233	✓	DCB %R	64.3614056	✓	DCB %R	114.948392	✓
44												
45	Homolog	ppm		Homolog	ppm		Homolog	ppm		Homolog	ppm	
46	mono	2.3881363		mono	0.30512632		mono	0.72067697		mono	0.6285504	
47	di	88.783571		di	40.3847687		di	12.0550204		di	55.0006068	
48	tri	244.36918		tri	132.094054		tri	99.2655863		tri	278.680437	
49	tetra	264.04543		tetra	157.085365		tetra	101.320989		tetra	327.833727	
50	penta	99.089953		penta	51.6846696		penta	32.1588341		penta	115.200816	
51	hexa	67.809301		hexa	21.0119651		hexa	21.670055		hexa	35.2317324	
52	hepta	11.077858		hepta	3.06827801		hepta	4.5776659		hepta	3.25141019	
53	octa	1.2196363		octa	0.40680412		octa	0.62305009		octa	0.52075553	
54												

WMNB 3/01, Webb McCall Calculations for New Bedford

	AI	AJ	AK	AL	AM	AN	AO	AP	AQ	AR	AS	AT
1	SAMPLE #	R7007880222		SAMPLE #	R7007880222		SAMPLE #	R7007880222		SAMPLE #	R7007880222	
2		1402SJR			1500SJR			1622SJTG			1622STG	
3	dilution used	0.2		dilution used	0.2		dilution used	1		dilution used	0.2	
4	inj.vol	2		inj.vol	2		inj.vol	2		inj.vol	2	
5	Peak Area	ng/injection		Peak Area	ng/injection		Peak Area	ng/injection		Peak Area	ng/injection	
6	103.33	0.00152068	0	139.21	0.00204871	0	554.79	0.06652318	1	145.72	0.0021445	0
7		0	0	705.47	0.05849005	1	8563.9	3.12026173	2		0	0
8	1632.17	0.18310324	1	128.32	0.00913137	0		0	0	2289.05	0.2854125	1
9	1750.83	0.12244439	1	983.62	0.06412914	1	11433.27	1.11907007	2	2525.84	0.2022171	1
10	666.04	0.02658584	1		0	0	8319.81	0.58261244	1	892.38	0.0381372	1
11	2338.73	0.07088466	1		0	0	7448.35	0.30719015	1	2638.85	0.0817809	1
12	327.97	0.01063966	0		0	0	3686.76	0.18061255	1	606.81	0.0196855	0
13	1026.6	0.03820158	1		0	0	8882.76	0.58040972	1	1701.92	0.0723842	1
14	334.69	0.01165093	0		0	0		0	0	926.86	0.0383471	1
15	212.69	0.00447651	0		0	0	6420.02	0.30111492	1	1117.74	0.034413	1
16	2937.69	0.10471899	1	47218	2.70520595	2	135089	7.88851766	2	25741	1.4383263	2
17		0	0		0	0		0	0	200	0.0048943	0
18		0	0		0	0		0	0	279.89	0.0093439	0
19	217.43	0.00361972	0	954.12	0.01805499	1	4820.5	0.18046842	1	227.62	0.0037894	0
20	307.64	0.00432277	0	1246.04	0.0175086	0	3942.97	0.0893453	1	725.25	0.0101908	0
21	133.62	0.00233981	0	638.73	0.01116803	0		0	0	338.66	0.0059214	0
22		0	0		0	0		0	0		0	0
23	107.07	0.0018761	0		0	0		0	0		0	0
24	171.14	0.00197805	0		0	0		0	0		0	0
25	201.84	0.00228197	0	169.91	0.00192097	0	392.93	0.0044424	0	92.15	0.0010418	0
26	183.39	0.00111888	0	173.73	0.00105994	0	237.88	0.00145133	0	104.35	0.0006366	0
27	108.76	0.00056327	0		0	0		0	0		0	0
28	113.68	0.00069885	0	115.36	0.00070918	0	169.57	0.00104243	0	103.07	0.0006336	0
29		0	0		0	0		0	0		0	0
30		0	0		0	0		0	0		0	0
31	DCB area	DCB ng/inj.		DCB area	DCB ng/inj.		DCB area	DCB ng/inj.		DCB area	DCB ng/inj.	
32	2348.69	0.01876667	1	2602.46	0.02083192	1	8967.34	0.08735141	1	2800.71	0.0224453	1
33												
34	Total ng PCB	0.59302589		Total ng PCB	2.88942693		Total ng PCB	14.4230623		Total ng PCB	2.2493002	
35												
36	g used	1.5		g used	0.4		g used	1.1		g used	1.1	
37	mL total vol.	10		mL total vol.	10		mL total vol.	10		mL total vol.	10	
38												
39	ppm PCB	9.88376487		ppm PCB	180.589183		ppm PCB	65.5593741		ppm PCB	51.120459	
40												
41	ul DCB used	5		ul DCB used	5		ul DCB used	5		ul DCB used	5	
42	conc (ng/ul)	96.8		conc (ng/ul)	96.8		conc (ng/ul)	96.8		conc (ng/ul)	96.8	
43	DCB %R	96.9352618		DCB %R	107.602906		DCB %R	90.2390569		DCB %R	115.93667	
44												
45	Homolog	ppm		Homolog	ppm		Homolog	ppm		Homolog	ppm	
46	mono	0.02534462		mono	0.12804452		mono	0.30237807		mono	0.048739	
47	di	3.56190556		di	5.22835663		di	15.4546784		di	7.6356095	
48	tri	3.39647101		tri	3.00605341		tri	8.68053499		tri	6.9072948	
49	tetra	2.08057824		tetra	120.043514		tetra	29.4653281		tetra	26.33172	
50	penta	0.56138045		penta	50.0331157		penta	11.0542645		penta	9.7904918	
51	hexa	0.15450143		hexa	1.93147457		hexa	0.57268135		hexa	0.356423	
52	hepta	0.09193609		hepta	0.17430115		hepta	0.02477039		hepta	0.0357795	
53	octa	0.01164748		octa	0.04432354		octa	0.00473833		octa	0.0144005	
54												

WMNB 3/01, Webb McCall Calculations for New Bedford

	BG	BH	BI	BJ	BK	BL	BM	BN	BO
1	SAMPLE #	R7007880222		SAMPLE #	R7007880224		SAMPLE #	R50M07	
2		1600STG			1702SJR			(1 ppm standard)	
3	dilution used	1		dilution used	1		dilution used	1	
4	inj.vol	2		inj.vol	2		inj.vol	2	
5	Peak Area	ng/injection		Peak Area	ng/injection		Peak Area	ng/injection	
6	1451.94	0.21376274	2	614.61	0.07634079	1	135.38	0.0019923	0
7	652.21	0.03773909	1		0	0	319.77	0.003056	0
8	2807	0.36608343	1	9877	1.46723846	2	1395.4	0.1462262	1
9	1252.01	0.08317771	1	5027.82	0.45974908	1	1962.58	0.1442401	1
10	2522.57	0.14935301	1	276.58	0.00878352	0	1410.33	0.0662292	1
11	1500	0.04043353	1	177.86	0.00401128	0	4206.71	0.1472193	1
12	221.06	0.0071714	0	75.06	0.00243502	0	3049.13	0.1407313	1
13	6707.57	0.42455506	1	993.01	0.03650136	1	2207.36	0.1021102	1
14		0	0	235.64	0.00820289	0	1764.81	0.0811355	1
15		0	0	149.68	0.00315033	0	1697.38	0.0578063	1
16	133635	7.80274948	2	58.4	0.00152496	0	3873.85	0.1484325	1
17		0	0	25	0.00061179	0	1450.79	0.0430278	1
18		0	0	22.17	0.00074145	0	1707.37	0.0808284	1
19	3843.4	0.1344658	1	251.09	0.00418009	0	2358.44	0.0657892	1
20	3030.45	0.05854286	1	266.41	0.00374343	0	5888.81	0.1550278	1
21	2152.57	0.0428785	1	47.54	0.00083122	0	6049.28	0.1619114	1
22		0	0		0	0	2257.81	0.0468958	1
23	506.4	0.00887323	0		0	0	5621.04	0.1343896	1
24	769.06	0.00888888	0	347.97	0.00402187	0	6601.59	0.1031406	1
25	1040.58	0.01176461	0		0	0	6831.35	0.1090653	1
26	474.07	0.00289235	0	511.56	0.00312108	0	10584	0.1208914	1
27	272.01	0.00140874	0		0	0	4590.51	0.0440374	1
28	275.58	0.00169413	0	188.06	0.0011561	0	4951.47	0.0419046	1
29		0	0		0	0	1219.78	0.0061556	1
30		0	0		0	0	2822.57	0.0175197	1
31	DCB area	DCB ng/inj.		DCB area	DCB ng/inj.		DCB area	DCB ng/inj.	
32	9293.28	0.09161543	1	8499.51	0.08123115	1	6149.27	0.0504848	1
33									
34	Total ng PCB	9.39643454		Total ng PCB	2.08634471		Total ng PCB	2.1697637	
35									
36	g used	1.2		g used	1.6		g used	1	
37	mL total vol.	10		mL total vol.	10		mL total vol.	1	
38									
39	ppm PCB	39.1518106		ppm PCB	6.51982723	✓	ppm PCB	1.0848818	
40									
41	ul DCB used	5		ul DCB used	5		ul DCB used	5	
42	conc (ng/ul)	96.8		conc (ng/ul)	96.8		conc (ng/ul)	5	
43	DCB %R	94.6440365		DCB %R	83.9164774		DCB %R	100.96957	
44									
45	Homolog	ppm		Homolog	ppm		Homolog	ppm	
46	mono	0.89067808		mono	0.23856496		mono	0.0009962	
47	di	1.76923728		di	4.94429916		di	0.0926711	
48	tri	1.08058843		tri	1.13358929		tri	0.2445673	
49	tetra	24.8521133		tetra	0.14638166		tetra	0.1813461	
50	penta	9.88112964		penta	0.01489916		penta	0.0996284	
51	hexa	0.57563322		hexa	0.01741529		hexa	0.2432018	
52	hepta	0.09537176		hepta	0.02106489		hepta	0.189681	
53	octa	0.00705888		octa	0.00361281		octa	0.03279	
54	1X HG CLEAN 1X AW			EXCESS COPPER & AW 3/7					

WMNB 3/07, Webb McCall Calculations for New Bedford

	K	L	M	N	O	P	Q	R	S	T	U	V
1	SAMPLE #	R7007880222		SAMPLE #	R7007880222		SAMPLE #	R7007880222		SAMPLE #	R7007880222	
2		1200SJR			1400SJR			1600STG			1002SJR	
3	dilution used	1		dilution used	1		dilution used	1		dilution used	0.1	
4	inj.vol	2		inj.vol	2		inj.vol	2		inj.vol	2	
5	Peak Area	ng/injection		Peak Area	ng/injection		Peak Area	ng/injection		Peak Area	ng/injection	
6	393.95	0.0605393	1	326.22	0.04756292	1	597.18	0.09947599	1	139.72	0.0118315	1
7		0	0		0	0		0	0		0	0
8	5362.05	0.8195142	1	2105.19	0.23942323	1	2396.1	0.29123825	1	4407.88	0.64956357	1
9	2140.79	0.130935	1	542.84	0.02863583	1	739.62	0.03991314	1	8282.89	0.85247004	1
10	216.86	0.0079158	0	461.4	0.01796703	1	515.17	0.02040544	1	3985.52	0.27854835	1
11	610.64	0.0135056	0	221.59	0.00490093	0	257.34	0.00569161	0	38650	1.98590703	2
12	164.69	0.0048101	0	116.94	0.00341547	0	143.41	0.00418859	0	6725.31	0.36984814	1
13	941.79	0.0295176	1	735.49	0.01998445	1	1192.68	0.04111134	1	22801	1.70661125	2
14		0	0		0	0		0	0	10965	0.74586991	2
15	117.72	0.0026664	0	124.04	0.00280951	0	183.38	0.00415357	0	10835	0.58168888	2
16	35.13	0.0008761	0	38.57	0.00096192	0		0	0	19110	1.11677816	1
17	25	0.0005532	0	25	0.0005532	0	18.29	0.00040472	0	10000	0.39822245	2
18	21.51	0.0011458	0	23.5	0.00125175	0	15	0.00079899	0	4595	0.32928298	1
19	115.46	0.0040296	0	80.37	0.00280495	0	124.24	0.00433604	0	15293.47	0.76425355	2
20	232.41	0.0065607	0	209	0.00589984	0	55.98	0.00158025	0	7778.55	0.25624847	1
21	185.23	0.002785	0	148.89	0.00223861	0	273.88	0.00411788	0	3132.39	0.06379678	1
22		0	0		0	0		0	0		0	0
23		0	0	62.85	0.00133199	0		0	0	762.76	0.01616528	0
24		0	0		0	0		0	0	266.64	0.00320997	0
25	152.37	0.0017932	0	135.3	0.00159233	0	91.53	0.00107721	0	54.75	0.00064435	0
26	265.73	0.0023663	0	160.95	0.00143323	0	148.98	0.00132664	0	204.58	0.00182174	0
27	128.09	0.0010662	0	117.39	0.00097717	0	115.14	0.00095844	0	489.39	0.00407376	0
28	190.07	0.0013687	0	125.7	0.00090519	0	135.04	0.00097245	0	131.72	0.00094854	0
29	130.94	0.0005847	0		0	0		0	0		0	0
30		0	0		0	0		0	0		0	0
31	DCB area	DCB ng/inj.		DCB area	DCB ng/inj.		DCB area	DCB ng/inj.		DCB area	DCB ng/inj.	
32	9418.15	0.0866449	1	10568	0.10009781	1	9222.38	0.08435446	1	9060.97	0.08246601	1
33												
34	Total ng PCB	1.0925334		Total ng PCB	0.38464956		Total ng PCB	0.52175054		Total ng PCB	10.1377847	
35												
36	g used	1.3		g used	0.5		g used	1.2		g used	0.5	
37	mL total vol.	10		mL total vol.	10		mL total vol.	10		mL total vol.	10	
38												
39	ppm PCB	4.2020516	✓	ppm PCB	3.84649564	✓	ppm PCB	2.17396057	✓	ppm PCB	1013.77847	✓
40												
41	ul DCB used	5		ul DCB used	5		ul DCB used	5		ul DCB used	5	
42	conc (ng/ul)	96.8		conc (ng/ul)	96.8		conc (ng/ul)	96.8		conc (ng/ul)	484	
43	DCB %R	89.509204		DCB %R	103.406825		DCB %R	87.1430363		DCB %R	170.38432	✓
44												
45	Homolog	ppm		Homolog	ppm		Homolog	ppm		Homolog	ppm	
46	mono	0.2328434		mono	0.47562925		mono	0.41448331		mono	1.18314981	
47	di	3.2778767		di	2.46582191		di	1.2550689		di	86.2631086	
48	tri	0.4785873		tri	0.47760299		tri	0.2509187		tri	351.979313	
49	tetra	0.1283048		tetra	0.24030126		tetra	0.1902901		tetra	397.916791	
50	penta	0.0204164		penta	0.04426287		penta	0.0183466		penta	125.263593	
51	hexa	0.0371006		hexa	0.09539052		hexa	0.02724042		hexa	50.1362225	
52	hepta	0.0194093		hepta	0.03843496		hepta	0.01356069		hepta	0.93643929	
53	octa	0.007513		octa	0.00905188		octa	0.00405186		octa	0.09485386	

	AI	AJ	AK	AL	AM	AN	AO	AP	AQ	AR	AS	AT
1	SAMPLE #	R7007880222		SAMPLE #	R7007880224		SAMPLE #	R7007880224		SAMPLE #	HXBKM07A	
2		1202SJR			1002SJR			1202SJR				
3	dilution used	0.1		dilution used	0.1		dilution used	1		dilution used	1	
4	inj.vol	2		inj.vol	2		inj.vol	2		inj.vol	2	
5	Peak Area	ng/injection		Peak Area	ng/injection		Peak Area	ng/injection		Peak Area	ng/injection	
6	226.73	0.02850169	1	86.47	0.00697147	1	355.36	0.05314584	1	32.07	0.00249075	1
7		0	0		0	0		0	0	253.15	0.02151207	1
8	3556.72	0.49796043	1	2578.22	0.3236763	1	9185	1.50043348	2	122.15	0.00869505	0
9	4427.36	0.39954677	1	6169.11	0.60415654	1	9065.4	0.94439437	1	71.21	0.00366847	0
10	2029.84	0.11333532	1	2937.24	0.18999116	1	876.61	0.03679636	1	183.67	0.00670429	0
11	8598.27	0.35354285	1	19605	0.95141165	1	1453.72	0.03502151	1	304.98	0.00674527	0
12	1967.19	0.0690277	1	4622.22	0.22176482	1	502.48	0.01467597	0		0	0
13	4501.37	0.26830374	1	11437	0.81342781	1	867.66	0.02609207	1	137.96	0.00355042	0
14	2316.12	0.10862052	1	7276.67	0.47411379	1		0	0	282.65	0.00872218	0
15	1499.04	0.04861316	1	925.37	0.02724778	1		0	0	52.73	0.00119434	0
16	3405.83	0.11280876	1	1049.27	0.02624794	1		0	0	-	0	0
17	200	0.00442559	0	250	0.00553199	0		0	0		0	0
18	233.78	0.01245256	0	208.39	0.01110013	0		0	0		0	0
19	423.69	0.01459523	1	156.52	0.00546262	0	100.87	0.00352041	0	60.73	0.00211951	0
20	1089.64	0.03075935	0	443.34	0.012515	0	291.04	0.00821574	0	703.97	0.0198723	0
21		0	0		0	0		0	0	168.53	0.00253391	0
22		0	0		0	0		0	0		0	0
23		0	0		0	0		0	0		0	0
24	94.55	0.00113825	0		0	0		0	0		0	0
25	212.13	0.00249653	0	280.42	0.00330023	0	47.08	0.00055408	0	166.81	0.00196317	0
26	444.57	0.0039588	0	258.89	0.00230536	0	168.73	0.00150251	0	251.37	0.0022384	0
27	714.58	0.00594828	0	283.56	0.0023604	0	366.99	0.00305489	0	476.7	0.00396813	0
28	200.08	0.00144081	0	129.51	0.00093262	0	107.8	0.00077629	0	124.41	0.0008959	0
29	127.8	0.00057064	0		0	0		0	0	121.85	0.00054407	0
30		0	0		0	0		0	0		0	0
31	DCB area	DCB ng/inj.		DCB area	DCB ng/inj.		DCB area	DCB ng/inj.		DCB area	DCB ng/inj.	
32	1017.11	0.00734729	1	5060.61	0.03969169	1	9754.97	0.0905856	1		0	0
33												
34	Total ng PCB	2.07804697		Total ng PCB	3.68251763		Total ng PCB	2.62818351		Total ng PCB	0.09741821	
35												
36	g used	0.8		g used	1.3		g used	2.8		g used	1	
37	mL total vol.	10		mL total vol.	10		mL total vol.	10		mL total vol.	1	
38												
39	ppm PCB	129.877936	✓	ppm PCB	141.635294	✓	ppm PCB	4.69318484	✓	ppm PCB	0.04870911	
40												
41	ul DCB used	5		ul DCB used	5		ul DCB used	5		ul DCB used		
42	conc (ng/ul)	96.8		conc (ng/ul)	484		conc (ng/ul)	96.8		conc (ng/ul)		
43	DCB %R	75.90177		DCB %R	82.0076233		DCB %R	93.5801667		DCB %R	#DIV/0!	
44												
45	Homolog	ppm		Homolog	ppm		Homolog	ppm		Homolog	ppm	
46	mono	1.78135583		mono	0.26813351		mono	0.09490329		mono	0.00124538	
47	di	37.3654448		di	18.2582858		di	3.10095014		di	0.01556212	
48	tri	54.4631692		tri	75.8747151		tri	1.41926717		tri	0.00953961	
49	tetra	29.6382788		tetra	45.4807638		tetra	0.04659298		tetra	0.00529431	
50	penta	3.72866817		penta	0.93292991		penta	0.00641249		penta	0.0020399	
51	hexa	1.9516539		hexa	0.49090416		hexa	0.01464387		hexa	0.01032111	
52	hepta	0.82364932		hepta	0.29369104		hepta	0.00902868		hepta	0.00398669	
53	octa	0.12571579		octa	0.03587015		octa	0.00138623		octa	0.00071999	

WMNB 3/07, Webb McCall Calculations for New Bedford

	BG	BH	BI	BJ	BK	BL	BM	BN	BO	BP	BQ	BR
1	SAMPLE #	R7007880224		SAMPLE #	R7007880224		SAMPLE #	R50M07A		SAMPLE #		
2		1400SJR			1600SJR							
3	dilution used	1		dilution used	1		dilution used	1		dilution used		
4	inj.vol	2		inj.vol	2		inj.vol	2		inj.vol		
5	Peak Area	ng/injection		Peak Area	ng/injection		Peak Area	ng/injection		Peak Area	ng/injection	
6	456	0.0724274	1	889.34	0.15545076	2	116.03	0.00940621	1		0	0
7		0	0		0	0	259.79	0.02225839	1		0	0
8	1942.27	0.21040497	1	2247.19	0.26471536	1	1327.59	0.10731305	1		0	0
9	539.97	0.02847136	1	694.71	0.03733938	1	1835.6	0.10272288	1		0	0
10	207.59	0.00757741	0	160.64	0.00586365	0	1471.84	0.06619628	1		0	0
11	522.66	0.01155972	0	353.39	0.00781596	0	4183.92	0.11433792	1		0	0
12	120.5	0.00351945	0	225.34	0.00658152	0	3074.98	0.11282016	1		0	0
13	514.52	0.01324124	0	1000.37	0.03222463	1	2300.23	0.09529936	1		0	0
14	289.88	0.00894529	0	327.85	0.01011699	0	1738.77	0.06693015	1		0	0
15	161.84	0.00366569	0	200.8	0.00454813	0	1701.97	0.05626406	1		0	0
16		0	0	61.75	0.00154002	0	3706.88	0.12386688	1		0	0
17	25	0.0005532	0	25	0.0005532	0	1350.85	0.03344247	1		0	0
18	23.03	0.00122672	0	24.54	0.00130715	0	1658.49	0.07197576	1		0	0
19	84.31	0.00294246	0	82.45	0.00287754	0	2282.7	0.06687021	1		0	0
20	317.84	0.00897228	0	433.44	0.01223554	0	5561.75	0.14746722	1		0	0
21	125.22	0.00188273	0	129.82	0.00195189	0	8052.81	0.24551624	1		0	0
22		0	0		0	0	2179.85	0.04730572	1		0	0
23		0	0		0	0	5251.93	0.11577332	1		0	0
24		0	0		0	0	6056.35	0.08497758	1		0	0
25	86.25	0.00101507	0	88.78	0.00104484	0	6322.26	0.09027388	1		0	0
26	229.64	0.0020449	0	196.14	0.00174659	0	9667.12	0.10005531	1		0	0
27	258.99	0.00215588	0	222.93	0.00185571	0	4233.74	0.03865285	1		0	0
28	130.29	0.00093824	0	153.06	0.00110221	0	4686	0.03778806	1		0	0
29		0	0		0	0	1146.18	0.00562853	1		0	0
30		0	0		0	0	2550.16	0.01353573	1		0	0
31	DCB area	DCB ng/inj.		DCB area	DCB ng/inj.		DCB area	DCB ng/inj.		DCB area	DCB ng/inj.	
32	7553.71	0.06483152	1	9192.93	0.0840099	1	5926.25	0.04661604	1		0	0
33												
34	Total ng PCB	0.38154398		Total ng PCB	0.55087107		Total ng PCB	1.9766782		Total ng PCB	0	
35												
36	g used	1.4		g used	1.5		g used	1		g used		
37	mL total vol.	10		mL total vol.	10		mL total vol.	1		mL total vol.		
38												
39	ppm PCB	1.36265706	✓	ppm PCB	1.83623689	✓	ppm PCB	0.9883391		ppm PCB	#DIV/0!	
40												
41	ul DCB used	5		ul DCB used	5		ul DCB used			ul DCB used		
42	conc (ng/ul)	96.8		conc (ng/ul)	96.8		conc (ng/ul)			conc (ng/ul)		
43	DCB %R	66.9747148		DCB %R	86.7870899		DCB %R	#DIV/0!		DCB %R	#DIV/0!	
44												
45	Homolog	ppm		Homolog	ppm		Homolog	ppm		Homolog	ppm	
46	mono	0.25866928		mono	0.51816919		mono	0.00470311		mono	#DIV/0!	
47	di	0.77686717		di	0.91350068		di	0.07762608		di	#DIV/0!	
48	tri	0.16772157		tri	0.17201424		tri	0.19624173		tri	#DIV/0!	
49	tetra	0.08376239		tetra	0.15065921		tetra	0.15889729		tetra	#DIV/0!	
50	penta	0.0163391		penta	0.01816333		penta	0.09367649		penta	#DIV/0!	
51	hexa	0.03768121		hexa	0.04491404		hexa	0.26867458		hexa	#DIV/0!	
52	hepta	0.01826547		hepta	0.01514216		hepta	0.16004367		hepta	#DIV/0!	
53	octa	0.00335086		octa	0.00367404		octa	0.02847616		octa	#DIV/0!	

WMNB 3/09 Webb McCall Calculations for New Bedford

	K	L	M	N	O	P	Q	R	S	T	U	V
1	SAMPLE #	R7007880308		SAMPLE #	R7007880309		SAMPLE #	R7007880309		SAMPLE #	R7007880309	
2		1402SRG			0800STG			0802STG			0802STG	
3	dilution used	0.002		dilution used	0.002		dilution used	0.002		dilution used	0.001	
4	inj.vol	2		inj.vol	2		inj.vol	2		inj.vol	2	
5	Peak Area	ng/injection		Peak Area	ng/injection		Peak Area	ng/injection		Peak Area	ng/injection	
6	372.49	0.0428935	1	229.41	0.02361866	1	420.81	0.04940293	1	166.21	0.01510474	1
7	681.37	0.1434853	1	489.07	0.09551596	1	953.87	0.21146053	1	308.55	0.05048517	1
8	5432.49	0.7117669	1	4425.76	0.56597366	1	5790.14	0.76356123	1	3058.04	0.36790241	1
9	10792	0.9803969	1	9610.15	0.86519479	1	13267	1.22165012	2	7370.65	0.64689716	1
10	7642.65	0.4996713	1	6720.16	0.4351696	1	9357.61	0.61958341	2	5572.53	0.35492587	1
11	25446	1.1157245	1	23541	1.02676692	1	32383	1.43966077	2	18197	0.77721878	1
12	16332	0.9144842	1	15134	0.84230307	1	20905	1.19001385	2	11722	0.63672532	1
13	15627	0.9888343	2	14580	0.91827731	2	20118	1.29148108	2	11878	0.70249571	1
14	10931	0.6491482	1	10437	0.61778856	1	14152	0.85362071	2	8062.66	0.46706292	1
15	10346	0.4639539	1	9925.35	0.44382343	1	13537	0.61666099	2	7727.71	0.33865412	1
16	27086	1.4388865	2	23194	1.21924153	1	31076	1.6640621	2	17390	0.89169287	1
17	7663.91	0.2662546	1	7075.18	0.244501	1	9589.58	0.33556054	1	5444.55	0.18424925	1
18	12423	0.8450071	2	11573	0.78276441	2	15598	1.07750198	2	9174.63	0.60713963	1
19	16619.13	0.7012083	2	15411.35	0.64687066	1	20560.12	0.8785121	2	11779.72	0.48348484	1
20	15626	0.598453	1	13887	0.51760733	1	18753	0.74382634	1	9638.43	0.32009247	1
21	10337	0.3359137	1	9263.21	0.29339351	1	10847	0.35610873	1	6198.97	0.17205515	1
22	1064.17	0.0225987	1	956.52	0.02032238	1	1025.21	0.02177486	1	557.41	0.01188303	1
23	8238.51	0.217178	1	7710.32	0.19878891	1	8909.82	0.24054991	1	5005.7	0.11124798	1
24	4186.07	0.0554353	1	4138.41	0.05476181	1	4375.03	0.05810545	1	2434.72	0.03068724	1
25	3830.46	0.0503319	1	3384.27	0.04398883	1	3436.55	0.04473205	1	1879.17	0.0225922	1
26	3374.99	0.0302234	1	2981.42	0.02610518	1	2850.35	0.02473368	1	1482.19	0.01259441	0
27	2126.61	0.0176562	1	1728.32	0.01419475	1	1688.53	0.01384894	1	677.41	0.00536032	0
28	1292.78	0.0085333	1	1072.21	0.0070433	0	747.81	0.00491233	0	299.7	0.00196872	0
29	494.02	0.0019092	1		0	0		0	0		0	0
30	689.68	0.0033909	1		0	0	247.31	0.00122793	0		0	0
31	DCB area	DCB ng/inj.		DCB area	DCB ng/inj.		DCB area	DCB ng/inj.		DCB area	DCB ng/inj.	
32	543.06	0.002536	1	2900.46	0.01785809	1	3163.93	0.01957053	1	165.65	0.00076326	0
33												
34	Total ng PCB	11.103339		Total ng PCB	9.90401556		Total ng PCB	13.7225526		Total ng PCB	7.21252029	
35												
36	g used	1.1		g used	1.3		g used	1.4		g used	1.4	
37	mL total vol.	10		mL total vol.	10		mL total vol.	10		mL total vol.	10	
38												
39	ppm PCB	25234.861		ppm PCB	19046.1838		ppm PCB	24504.5581		ppm PCB	25759.001	
40												
41	ul DCB used	5		ul DCB used	5		ul DCB used	5		ul DCB used	5	
42	conc (ng/ul)	484		conc (ng/ul)	484		conc (ng/ul)	484		conc (ng/ul)	484	
43	DCB %R	261.98525		DCB %R	1844.8441		DCB %R	2021.74909		DCB %R	157.698825	
44												
45	Homolog	ppm		Homolog	ppm		Homolog	ppm		Homolog	ppm	
46	mono	97.485338		mono	45.4205077		mono	88.2195197		mono	53.9454884	
47	di	2500.7986		di	1688.05447		di	2286.48979		di	2071.82809	
48	tri	7907.7194		tri	6071.16521		tri	7941.41152		tri	8600.62003	
49	tetra	7217.2305		tetra	5550.34916		tetra	7137.70105		tetra	7755.1185	
50	penta	4249.519		penta	3253.48326		penta	4137.93489		penta	4537.58282	
51	hexa	2879.8291		hexa	2156.21119		hexa	2648.22268		hexa	2476.27592	
52	hepta	350.83965		hepta	267.955174		hepta	253.613922		hepta	256.599058	
53	octa	31.43946		octa	13.5448031		octa	10.9647555		octa	7.03112628	

WMNB 3/09 Webb McCall Calculations for New Bedford

	AI	AJ	AK	AL	AM	AN	AO	AP	AQ	AR	AS	AT
1	SAMPLE #	R7007880309		SAMPLE #	R7007880309		SAMPLE #	R7007880309		SAMPLE #	R50M09A	
2		1202SJR			1400SJR			1402SJR				
3	dilution used	0.01		dilution used	0.05		dilution used	0.05		dilution used	1	
4	inj.vol	2		inj.vol	2		inj.vol	2		inj.vol	2	
5	Peak Area	ng/injection		Peak Area	ng/injection		Peak Area	ng/injection		Peak Area	ng/injection	
6	572.83	0.06988216	1	407.5	0.04760989	1	808.56	0.1016383	1	149.28	0.01282403	1
7	417.84	0.07774761	-1		0	0		0	0	257.25	0.03768836	1
8	9378.3	1.28319343	2	5535.63	0.72670345	1	9682.76	1.32728489	2	1416.77	0.13021603	1
9	14095	1.3023603	2	5282.73	0.44337495	1	6642.65	0.57593459	1	2150.65	0.13807213	1
10	8070.17	0.52956399	1	1353.18	0.0601723	1	872.28	0.03478703	1	1626.68	0.0790271	1
11	10683	0.4263384	1	1201.69	0.02276415	0	1020.7	0.01933558	0	4668.65	0.14548699	1
12	4186.26	0.1826865	1	495.34	0.0124446	0	753.1	0.0189204	0	3459.67	0.13890844	1
13	4186.26	0.21784701	1	717.91	0.01834019	1	655.43	0.01644344	0	2667.46	0.11549564	1
14	1961.23	0.07973765	1	333.57	0.00955325	0	390.36	0.01117968	0	2092.91	0.08809684	1
15	580.68	0.01467119	1	289.52	0.00680537	0	337.11	0.00792401	0	2110.19	0.06982452	1
16	1070.79	0.02747303	1	832.98	0.02102178	0	869.63	0.02194671	0	4552.55	0.16721154	1
17	304.15	0.00657306	0	260.74	0.00563491	0	712.9	0.01714925	1	1681.38	0.04520018	1
18	575.14	0.01643593	1	536.64	0.01477192	0	266.34	0.00733146	0	2195.96	0.09611447	1
19	914.55	0.02086137	1	765.12	0.01650778	1	485.09	0.009959	0	2999.04	0.08844498	1
20	714.91	0.01363231	0	608.17	0.01159693	0	666.84	0.01271569	0	6581.3	0.17796733	1
21	458.75	0.00836998	0	454.34	0.00828952	0	434.87	0.00793429	0	6661.59	0.19037406	1
22		0	0		0	0		0	0	2446.26	0.05328321	1
23	87.25	0.00175438	0	214.26	0.00430824	0	91.66	0.00184305	0	5931.78	0.13686844	1
24	145.56	0.00171427	0	493.21	0.00580857	0	167.37	0.00197113	0	7073.81	0.09819344	1
25	141.94	0.00166719	0	528.09	0.00620281	0	123.14	0.00144637	0	7373.15	0.10228848	1
26	153.15	0.00130134	0	827.8	0.00703395	0	244.25	0.00207543	0	11187	0.1129644	1
27		0	0		0	0		0	0	5006.81	0.04306085	1
28		0	0		0	0		0	0	5673.89	0.03971262	1
29		0	0		0	0		0	0	1549.46	0.00585009	1
30		0	0		0	0		0	0	3279.53	0.01533974	1
31	DCB area	DCB ng/inj.		DCB area	DCB ng/inj.		DCB area	DCB ng/inj.		DCB area	DCB ng/inj.	
32	705.79	0.00359369	1	790.53	0.00414446	1	641.21	0.00317395	1	6792.11	0.04315212	1
33												
34	Total ng PCB	4.28381111		Total ng PCB	1.44894456		Total ng PCB	2.1978203		Total ng PCB	2.32851392	
35												
36	g used (est.)	1.4		g used	0.6		g used	1.1		g used	1	
37	mL total vol.	10		mL total vol.	10		mL total vol.	10		mL total vol.	1	
38												
39	ppm PCB	1529.93254		ppm PCB	241.490761		ppm PCB	199.801846		ppm PCB	1.16425696	
40												
41	ul DCB used	5		ul DCB used	5		ul DCB used	5		ul DCB used	5	
42	conc (ng/ul)	484		conc (ng/ul)	96.8		conc (ng/ul)	96.8		conc (ng/ul)	5	
43	DCB %R	74.2498219		DCB %R	85.6294315		DCB %R	65.5774689		DCB %R	86.3042431	
44												
45	Homolog	ppm		Homolog	ppm		Homolog	ppm		Homolog	ppm	
46	mono	24.957914		mono	7.9349812		mono	9.23984542		mono	0.00641201	
47	di	602.332539		di	139.591198		di	133.751685		di	0.10121121	
48	tri	764.883049		tri	71.8441397		tri	46.2439313		tri	0.24802429	
49	tetra	111.436192		tetra	8.68443605		tetra	5.87175021		tetra	0.2041327	
50	penta	14.9624652		penta	5.815017		penta	2.08984212		penta	0.12046494	
51	hexa	9.80871582		hexa	4.64695738		hexa	2.13650226		hexa	0.27201027	
52	hepta	1.55166253		hepta	2.97403164		hepta	0.46828915		hepta	0.18155029	
53	octa	0		octa	0		octa	0		octa	0.03045123	

WMNB 3/09 Webb McCall Calculations for New Bedford

	BG	BH	BI	BJ	BK	BL	BM	BN	BO	BP	BQ	BR
1	SAMPLE #	R7007880309		SAMPLE #			SAMPLE #			SAMPLE #		
2		1802SJR										
3	dilution used	0.1		dilution used			dilution used			dilution used		
4	inj.vol	2		inj.vol			inj.vol			inj.vol		
5	Peak Area	ng/injection		Peak Area	ng/injection		Peak Area	ng/injection		Peak Area	ng/injection	
6	2218.52	0.29157971	2		0	0		0	0		0	0
7		0	0		0	0		0	0		0	0
8	23663	3.35188327	2		0	0		0	0		0	0
9	10097	0.91265101	1		0	0		0	0		0	0
10	521.07	0.01624771	1		0	0		0	0		0	0
11	1304.82	0.02597774	1		0	0		0	0		0	0
12	269.69	0.00677552	0		0	0		0	0		0	0
13	2188.43	0.08479072	1		0	0		0	0		0	0
14	397.74	0.01139104	0		0	0		0	0		0	0
15	341.79	0.00803402	0		0	0		0	0		0	0
16	842.56	0.02126355	0		0	0		0	0		0	0
17	206.7	0.00446704	0		0	0		0	0		0	0
18	458.43	0.01261906	0		0	0		0	0		0	0
19	722.28	0.01525965	1		0	0		0	0		0	0
20	468.19	0.00892772	0		0	0		0	0		0	0
21	575.88	0.01050704	0		0	0		0	0		0	0
22		0	0		0	0		0	0		0	0
23	74.94	0.00150686	0		0	0		0	0		0	0
24	54.62	0.00064326	0		0	0		0	0		0	0
25		0	0		0	0		0	0		0	0
26	125.3	0.00106469	0		0	0		0	0		0	0
27		0	0		0	0		0	0		0	0
28		0	0		0	0		0	0		0	0
29		0	0		0	0		0	0		0	0
30		0	0		0	0		0	0		0	0
31	DCB area	DCB ng/inj.		DCB area	DCB ng/inj.		DCB area	DCB ng/inj.		DCB area	DCB ng/inj.	
32	1073.08	0.00598092	1		0	0		0	0		0	0
33												
34	Total ng PCB	4.7855896		Total ng PCB	0		Total ng PCB	0		Total ng PCB	0	
35												
36	g used	1.7		g used			g used			g used		
37	mL total vol.	10		mL total vol.			mL total vol.			mL total vol.		
38												
39	ppm PCB	140.752635		ppm PCB	#DIV/0!		ppm PCB	#DIV/0!		ppm PCB	#DIV/0!	
40												
41	ul DCB used	5		ul DCB used			ul DCB used			ul DCB used		
42	conc (ng/ul)	96.8		conc (ng/ul)			conc (ng/ul)			conc (ng/ul)		
43	DCB %R	61.7863272		DCB %R	#DIV/0!		DCB %R	#DIV/0!		DCB %R	#DIV/0!	
44												
45	Homolog	ppm		Homolog	ppm		Homolog	ppm		Homolog	ppm	
46	mono	8.5758737		mono	#DIV/0!		mono	#DIV/0!		mono	#DIV/0!	
47	di	105.295471		di	#DIV/0!		di	#DIV/0!		di	#DIV/0!	
48	tri	21.6837727		tri	#DIV/0!		tri	#DIV/0!		tri	#DIV/0!	
49	tetra	3.53002628		tetra	#DIV/0!		tetra	#DIV/0!		tetra	#DIV/0!	
50	penta	0.93159726		penta	#DIV/0!		penta	#DIV/0!		penta	#DIV/0!	
51	hexa	0.68755217		hexa	#DIV/0!		hexa	#DIV/0!		hexa	#DIV/0!	
52	hepta	0.04834211		hepta	#DIV/0!		hepta	#DIV/0!		hepta	#DIV/0!	
53	octa	0		octa	#DIV/0!		octa	#DIV/0!		octa	#DIV/0!	

WMNB 3/11, Webb-McCall Calculations for New Bedford

	K	L	M	N	O	P	Q	R	S	T	U	V
1	SAMPLE #	R7007880311		SAMPLE #	R7007880311		SAMPLE #	R7007880311		SAMPLE #	R7007880311	
2		0800SJR			0802SJR			1000SJR			1002SJR	
3	dilution used	0.1		dilution used	0.1		dilution used	0.1		dilution used	0.1	
4	inj.vol	2		inj.vol	2		inj.vol	2		inj.vol	2	
5	Peak Area	ng/injection		Peak Area	ng/injection		Peak Area	ng/injection		Peak Area	ng/injection	
6	1626.08	0.2003308	2	1274.79	0.15405489	2	591.05	0.06398495	1	977.89	0.11494387	2
7		0	0		0	0		0	0		0	0
8	25937	3.732654	2	12265	1.72715516	2	7413.49	1.0155038	1	9439.05	1.31262625	2
9	15665	1.4865776	2	4827.1	0.40172795	1	3769.84	0.29589858	1	3214.22	0.24028226	1
10	1114.84	0.0482999	1	391.72	0.01532669	1	122.03	0.00460704	0	112.76	0.00425707	0
11	2153.93	0.0525126	1	444	0.00804779	0	64.7	0.00117273	0	108.05	0.00195848	0
12	2210.63	0.0777691	1	77.78	0.00195697	0	98.25	0.00247201	0	71.03	0.00178714	0
13	740.26	0.0186508	1	838.51	0.02280205	1	482.34	0.01186651	0	553.93	0.01362777	0
14	587.82	0.0173341	1	617.04	0.01850477	1	274.68	0.00755256	0	262.32	0.00721271	0
15		0	0		0	0		0	0	120.62	0.00243164	0
16	356.42	0.0075656	0	82.71	0.00175566	0	91.98	0.00195244	0	14.65	0.00031097	0
17	90	0.0018089	0	30	0.00060298	0	60.63	0.00121863	0	94.48	0.00189899	0
18	92.08	0.0023515	0	31.74	0.00081056	0	139.65	0.00356631	0	119.06	0.00304049	0
19	671.81	0.0105869	0	141.53	0.00223035	0	166.61	0.00262558	0	229.56	0.0036176	0
20	85.27	0.0016194	0	515.65	0.00979297	0	802.93	0.01524885	0	324.26	0.00615818	0
21	156.54	0.0025784	0	173.45	0.00285695	0		0	0	173.92	0.00286469	0
22		0	0		0	0		0	0		0	0
23		0	0		0	0		0	0		0	0
24	415.75	0.0051531	0	44.53	0.00055194	0	761.19	0.00943473	0	199.03	0.00246692	0
25		0	0		0	0		0	0		0	0
26	243.02	0.0021895	0	160.6	0.00144691	0	465.56	0.00419442	0	278.63	0.00251029	0
27	73.7	0.0006011	0	135.07	0.00110166	0	509.43	0.00415502	0	201.46	0.00164315	0
28		0	0		0	0		0	0		0	0
29		0	0		0	0		0	0		0	0
30		0	0		0	0		0	0		0	0
31	DCB area	DCB ng/inj.		DCB area	DCB ng/inj.		DCB area	DCB ng/inj.		DCB area	DCB ng/inj.	
32	1279.98	0.0087809	1	1193.98	0.00809814	1	1251.49	0.00855471	1	985.98	0.00644685	1
33												
34	Total ng PCB	5.6685834		Total ng PCB	2.37072625		Total ng PCB	1.44545415		Total ng PCB	1.72363847	
35												
36	g used	1.2		g used	1.4		g used	2.1		g used (est.)	2.2	
37	mL total vol.	10		mL total vol.	10		mL total vol.	10		mL total vol.	10	
38												
39	ppm PCB	236.19097	✓	ppm PCB	84.6687946	✓	ppm PCB	34.415575	✓	ppm PCB	39.1736016	✓
40												
41	ul DCB used	5		ul DCB used	5		ul DCB used	5		ul DCB used	5	
42	conc (ng/ul)	96.8		conc (ng/ul)	96.8		conc (ng/ul)	96.8		conc (ng/ul)	96.8	
43	DCB %R	90.71167		DCB %R	83.6585096		DCB %R	88.3751055		DCB %R	66.5997034	
44												
45	Homolog	ppm		Homolog	ppm		Homolog	ppm		Homolog	ppm	
46	mono	8.3471152		mono	5.50196029		mono	1.52345121		mono	2.61236078	
47	di	171.01243		di	65.2709697		di	25.9399629		di	31.1976548	
48	tri	54.134796		tri	11.8833568		tri	5.53971569		tri	4.33169486	
49	tetra	1.5602156		tetra	1.32320515		tetra	0.46503769		tetra	0.52299317	
50	penta	0.5292962		penta	0.15314866		penta	0.18822158		penta	0.15204348	
51	hexa	0.2976037		hexa	0.42739281		hexa	0.35821687		hexa	0.21199833	
52	hepta	0.3095155		hepta	0.10876122		hepta	0.40096903		hepta	0.14485616	
53	octa	0		octa	0		octa	0		octa	0	

WMNB 3/11, Webb-McCall Calculations for New Bedford

	AI	AJ	AK	AL	AM	AN	AO	AP	AQ	AR	AS	AT
1	SAMPLE #	R7007880311		SAMPLE #	R7007880311		SAMPLE #	HXBKM14		SAMPLE #	R50M11A	
2		1600SJR			1602SJR			hexane blank				
3	dilution used	0.2		dilution used	0.2		dilution used	1		dilution used	1	
4	inj.vol	2		inj.vol	2		inj.vol	2		inj.vol	2	
5	Peak Area	ng/injection		Peak Area	ng/injection		Peak Area	ng/injection		Peak Area	ng/injection	
6	2238.62	0.28102144	2	984.4	0.11580145	2	82	0.00171125	0	162.94	0.00826853	1
7		0	0		0	0	413	0.06546168	1	257.46	0.03075391	0
8	23559	3.3838333	2	4349.37	0.56603854	1	100	0.00710893	0	1297.71	0.118401	1
9	7190.54	0.63830303	1	822.26	0.04528113	1		0	0	1818.73	0.1044244	1
10	255.12	0.00963164	0		0	0	67	0.00252948	0	1321.55	0.05772557	1
11		0	0		0	0		0	0	3880.62	0.11009296	1
12	2267.61	0.0801529	1	591.41	0.01488009	0	104.42	0.00262725	0	2821.5	0.10332493	1
13		0	0		0	0	419.24	0.01031413	0	2154.55	0.07840714	1
14		0	0		0	0	66.8	0.00183672	0	1706.53	0.0621553	1
15		0	0		0	0		0	0	1689.94	0.04905176	1
16	694.18	0.01473518	0		0	0		0	0	3727.83	0.12075111	1
17		0	0		0	0		0	0	1359.59	0.03372685	1
18		0	0	197.44	0.00504212	0		0	0	1762.28	0.06437427	1
19	417.83	0.00658451	0	124.08	0.00195535	0	101.3	0.00159637	0	2368.27	0.06122845	1
20		0	0	510.33	0.00969193	0	797.07	0.01513756	0	5759.67	0.149913	1
21		0	0	197.03	0.00324534	0		0	0	6055.32	0.1536133	1
22		0	0		0	0		0	0	2307.31	0.04910543	1
23	190.44	0.00387543	0		0	0		0	0	5475.03	0.12710606	1
24		0	0		0	0		0	0	6593.97	0.09214161	1
25		0	0	365.39	0.00422324	0	354.04	0.00409205	0	6801.79	0.09626286	1
26		0	0	386.44	0.0034816	0	297351	4.87378374	2	10334	0.11021576	1
27		0	0	647.5	0.00528115	0	296.28	0.00241652	0	4531.81	0.04113114	1
28		0	0		0	0	79	0.0004817	0	5141.22	0.03738636	1
29		0	0		0	0		0	0	1315.4	0.00479426	1
30		0	0		0	0		0	0	2677.08	0.01275092	1
31	DCB area	DCB ng/inj.		DCB area	DCB ng/inj.		DCB area	DCB ng/inj.		DCB area	DCB ng/inj.	
32	2210.81	0.01617066	1	1935.77	0.01398714	1		0	0	6770.04	0.05378334	1
33												
34	Total ng PCB	4.41813742		Total ng PCB	0.77492195		Total ng PCB	4.98909737		Total ng PCB	1.87710689	
35												
36	g used (est.)	0.7		g used	0.7		g used	1		g used	1	
37	mL total vol.	10		mL total vol.	10		mL total vol.	1		mL total vol.	1	
38												
39	ppm PCB	157.790622	✓	ppm PCB	27.6757839	✓	ppm PCB	2.49454868		ppm PCB	0.93855344	
40												
41	ul DCB used	5		ul DCB used	5		ul DCB used			ul DCB used	1000	
42	conc (ng/ul)	96.8		conc (ng/ul)	96.8		conc (ng/ul)			conc (ng/ul)	0.0242	
43	DCB %R	83.5261442		DCB %R	72.2476488		DCB %R	#DIV/0!		DCB %R	111.122612	
44										*ul per ml of standard		
45	Homolog	ppm		Homolog	ppm		Homolog	ppm		Homolog	ppm	
46	mono	10.0364799		mono	4.13576589		mono	0.00085563		mono	0.00413426	
47	di	126.550323		di	20.619958		di	0.0362853		di	0.0876305	
48	tri	20.3039931		tri	1.74431933		tri	0.00288142		tri	0.1849865	
49	tetra	0.37364207		tetra	0		tetra	0.00577237		tetra	0.14428155	
50	penta	0.32663352		penta	0.27908517		penta	0.00149891		penta	0.08518569	
51	hexa	0.19955016		hexa	0.44795338		hexa	0.00707266		hexa	0.23213735	
52	hepta	0		hepta	0.44870218		hepta	2.43994156		hepta	0.17273182	
53	octa	0		octa	0		octa	0.00024085		octa	0.02746577	

WMNB 3/21/88, Webb McCall Calculations for New Bedford

STANDARDS (1:1 mixtures of aroclors 1242 and 1260)							SAMPLE #	R7007880321	
								0800SJR	
Total PCB Conc (ng/ul)		0.2		1		10	dilution used	0.002	
inj. Vol.		2		2		2	inj.vol	2	
peak ID	Peak Area	ng/injection	Peak Area	ng/injection	Peak Area	ng/injection	Peak Area	ng/injection	
11	65.23	0.0022	136.82	0.011	839.91	0.11	130.83	0.0102637	1
16	123.65	0.0058	199.31	0.029	1374.54	0.29	202.03	0.0296041	1
21	285.16	0.0226	1099.38	0.113	9350.84	1.13	1468.98	0.1585535	1
28	391.63	0.022	1674.02	0.11	13910	1.1	3053.56	0.2216171	1
32	275.81	0.0122	1196.36	0.061	10673	0.61	2031.8	0.1093986	1
37	1047.9	0.023	3820.44	0.115	31343	1.15	8203.86	0.2798408	1
40	732.15	0.0222	2768.41	0.111	23359	1.11	4757.21	0.2074912	1
47	551.81	0.0176	1944.8	0.088	16112	0.88	4670.66	0.2403859	1
54	410.09	0.0136	1601.71	0.068	13401	0.68	3410.76	0.161831	1
58	372.77	0.0112	1544.67	0.056	14489	0.56	2376.97	0.0884064	1
70	955.37	0.026	3601.02	0.13	29583	1.3	5716.45	0.2252604	1
78	293.63	0.0072	1287.57	0.036	12194	0.36	1300	0.0363693	1
84	399.52	0.0148	1568.75	0.074	12801	0.74	1047.72	0.0476194	1
98+104	495.78	0.0138	1934.69	0.069	18456	0.69	1249.51	0.0427149	1
117+125	1592.9	0.0312	5280.69	0.156	43378	1.56	353.61	0.0069261	0
146	3874.49	0.0302	6361.07	0.151	49169	1.51	434.01	0.0033829	0
160	526.7	0.0098	2322.7	0.049	19556	0.49		0	0
174	1384.45	0.0248	5775.85	0.124	46845	1.24	71.87	0.0012874	0
203	1562.24	0.0186	6548.81	0.093	51732	0.93		0	0
232+244	1571.88	0.0196	6577.56	0.098	53861	0.98		0	0
280	2642.73	0.022	10639	0.11	87633	1.1	151.42	0.0012605	0
332	1092.41	0.0084	4518.88	0.042	37713	0.42	304.74	0.0023433	0
372	1182.16	0.008	4971.62	0.04	42780	0.4		0	0
448	278.38	0.0012	1144.57	0.006	12093	0.06		0	0
528	623.37	0.003	2690.95	0.015	24651	0.15		0	0
	Peak Area	ng/injection	Peak Area	ng/injection	Peak Area	ng/injection	DCB area	DCB ng/inj.	
DCB	504.41	0.00242	7041.22	0.0484	57602	0.484	343.15	0.0016463	0
The detection limit for this analysis is 0.1 ng/injection							Total ng PCB	1.8745565	
These analyses are accurate to no more than 2 significant digits									
							g used	1.2	
		ALL SAMPLES USE COPPER IN CLEANUP.					mL total vol.	10	
Dry weights used.									
							ppm PCB	3905.326	✓
							ul DCB used	10	
							conc (ng/ul)	484	
							DCB %R	85.03747	
	Homolog	ng/inj	Homolog	ng/inj	Homolog	ng/inj	Homolog	ppm	
	mono	0.0022	mono	0.011	mono	0.11	mono	21.3827	
	di	0.0339	di	0.1695	di	1.695	di	507.42059	
	tri	0.078388	tri	0.39194	tri	3.9194	tri	1700.7243	
	tetra	0.063572	tetra	0.31786	tetra	3.1786	tetra	1319.8399	
	penta	0.037806	penta	0.18903	penta	1.8903	penta	303.23793	
	hexa	0.093254	hexa	0.46627	hexa	4.6627	hexa	45.212631	
	hepta	0.06968	hepta	0.3484	hepta	3.484	hepta	7.5079247	
	octa	0.0122	octa	0.061	octa	0.61	octa	0	

WMNB 3/21/88, Webb McCall Calculations for New Bedford

SAMPLE #	HXBKM21D		SAMPLE #	R50M21A		SAMPLE #	R7007880321		SAMPLE #	R7007880321	
							1300SJR			1400CRG	
dilution used	1		dilution used	1		dilution used	1		dilution used	30 0.001	
inj.vol	2		inj.vol	2		inj.vol	2		inj.vol	2	
Peak Area	ng/injection		Peak Area	ng/injection		Peak Area	ng/injection		Peak Area	ng/injection	
79.23	0.00392091	1	146.48	0.0123602	1	1694.11	0.23027735	2	7895.8	1.10351877	2
325.37	0.05699593	1	215.43	0.03258	1	178.16	0.02251467	1	10814	2.38635481	2
106.56	0.00844528	0	1100.12	0.11309121	1	573.78	0.05464447	1	70826	8.70686976	2
83.44	0.00468728	0	1608.06	0.1054737	1	336.36	0.01889518	0	74240	5.9812355	2
	0	0	1173.64	0.05979557	1	190.51	0.0084269	0	38083	2.19791407	2
148.53	0.00326003	0	3645.35	0.10919006	1	875.8	0.01922264	0	121045	4.52328977	2
50.48	0.00153064	0	2670.82	0.10674416	1	508.69	0.01542432	0	50964	2.44932029	2
	0	0	1942.58	0.0878878	1	638.59	0.02198575	1	43335	2.40186854	2
	0	0	1544.61	0.06539326	1	364.52	0.01208874	0	21841	1.11776193	2
	0	0	1515.27	0.05487608	1	281.68	0.00846317	0	15367	0.59418578	2
	0	0	3361.24	0.12057429	1	522.29	0.01421391	0	27240	1.19449187	1
40	0.00098083	0	1206.14	0.03364052	1	80	0.00196165	0	7000	0.20570056	1
47.46	0.00175813	0	1458.51	0.06841837	1	80.4	0.00297837	0	6184	0.34765457	1
	0	0	1821.18	0.06464549	1	66.77	0.00185854	0	6223.86	0.23022054	1
500.94	0.00981187	0	5157.86	0.15184326	1	217.18	0.00425389	0	2709.14	0.06897513	1
	0	0	5529.14	0.11058419	1	185.23	0.00144379	0	2373.82	0.01850292	0
	0	0	2064.28	0.04335965	1		0	0		0	0
43.26	0.00077493	0	5063.45	0.10790716	1	74.58	0.00133597	0	192.22	0.00344329	0
	0	0	5620.67	0.07915208	1	106.9	0.00127275	0	66.36	0.00079008	0
	0	0	5699.69	0.08425062	1	83	0.00103494	0	89.7	0.00111848	0
168.67	0.00140413	0	8876.42	0.09060258	1	329.61	0.00274391	0	86.99	0.00072417	0
249.41	0.00191782	0	3846.15	0.0354032	1	374.12	0.00287677	0	115.86	0.0008909	0
	0	0	4259.93	0.03399015	1		0	0	76.58	0.00051824	0
	0	0	953.5	0.00494118	1	27.92	0.00012035	0		0	0
	0	0	2299.99	0.01273091	1	85.48	0.00041138	0		0	0
DCB area	DCB ng/inj.		DCB area	DCB ng/inj.		DCB area	DCB ng/inj.		DCB area	DCB ng/inj.	
	0	0	6005.77	0.04111663	1	8199.84	0.05838194	1		0	0
Total ng PCB	0.09548778		Total ng PCB	1.78943571		Total ng PCB	0.4484494		Total ng PCB	33.53535	
g used	1		g used	1		g used	2.8		g used	220.4	
mL total vol.	1		mL total vol.	1		mL total vol	10		mL total vol.	10	
ppm PCB	0.04774389		ppm PCB	0.89471785		ppm PCB	0.80080251	✓	ppm PCB	760.783801	
ul DCB used			ul DCB used			ul DCB used	5		ul DCB used	(for conc)	
conc (ng/ul)			conc (ng/ul)			conc (ng/ul)	96.8		conc (ng/ul)		
DCB %R	#DIV/0!		DCB %R	#DIV/0!		DCB %R	60.3119256		DCB %R	#DIV/0!	
Homolog	ppm		Homolog	ppm		Homolog	ppm		Homolog	ppm	
mono	0.00196046		mono	0.0061801		mono	0.41120955		mono	25.0344548	
di	0.03330652		di	0.08601981		di	0.14621953		di	285.583789	
tri	0.00415307		tri	0.18820743		tri	0.10934737		tri	318.178589	
tetra	0.00049041		tetra	0.15291282		tetra	0.09036055		tetra	108.864442	
penta	0.00146778		penta	0.08748649		penta	0.01617568		penta	19.8190239	
hexa	0.00470469		hexa	0.20070607		hexa	0.0127946		hexa	3.21613813	
hepta	0.00166097		hepta	0.14737402		hepta	0.01374571		hepta	0.07560733	
octa	0		octa	0.02583112		octa	0.00094952		octa	0.01175676	

WMNB 3/28/88, Webb McCall Calculations for New Bedford

STANDARDS (1:1 mixtures of aroclors 1242 and 1260)							SAMPLE #	R7007880329	
								1300SJR	
Total PCB	Conc (ng/ul)	0.2		1		10	dilution used	0.1	
inj. Vol.		2		2		2	inj.vol	2	
peak ID	Peak Area	ng/injection	Peak Area	ng/injection	Peak Area	ng/injection	Peak Area	ng/injection	
11	48.1	0.0022	207.51	0.011	988.01	0.11	213.16	0.0117167	1
16	100.47	0.0058	416.36	0.029	1396.99	0.29		0	0
21	362.83	0.0226	1442.62	0.113	9275.8	1.13	4125.1	0.4612726	1
28	429.01	0.022	2052.32	0.11	13265	1.1	6290.12	0.4841676	1
32	276.82	0.0122	1470.43	0.061	10331	0.61	2675.75	0.1356815	1
37	997.68	0.023	4371.49	0.115	27889	1.15	11007.53	0.4070505	1
40	686.55	0.0222	3249.72	0.111	21582	1.11	1980.33	0.0670225	1
47	663.55	0.0176	2532.43	0.088	15285	0.88	5361.55	0.2637029	1
54	425.35	0.0136	1961.29	0.068	12218	0.68	2439.3	0.096522	1
58	423.32	0.0112	1982.78	0.056	13938	0.56	291.04	0.0077002	0
70	1029.45	0.026	4242.45	0.13	26294	1.3		0	0
78	294.89	0.0072	1530.07	0.036	10626	0.36		0	0
84	569.84	0.0148	2079.09	0.074	12600	0.74		0	0
98+104	594.03	0.0138	2678.43	0.069	17399	0.69	24.94	0.0005794	0
117+125	1644.97	0.0312	6367.82	0.156	38978	1.56	109.31	0.0020733	0
146	4001.58	0.0302	6919.05	0.151	42873	1.51	39.97	0.0003017	0
160	665.98	0.0098	2643.09	0.049	17554	0.49		0	0
174	1477.45	0.0248	6068.54	0.124	41282	1.24	45.08	0.0007567	0
203	1744.35	0.0186	7143.17	0.093	46463	0.93		0	0
232+244	1734.46	0.0196	7358.42	0.098	48623	0.98		0	0
280	2878.55	0.022	11062	0.11	77658	1.1	67.65	0.000517	0
332	1062.21	0.0084	4904.49	0.042	33483	0.42		0	0
372	1247.75	0.008	5766.56	0.04	41762	0.4		0	0
448	264.18	0.0012	1604.8	0.006	13424	0.06		0	0
528	676.75	0.003	3327.63	0.015	25970	0.15		0	0
	Peak Area	ng/injection	Peak Area	ng/injection	Peak Area	ng/injection	DCB area	DCB ng/inj.	
DCB	275.85	0.00242	6647.76	0.0484	43284	0.484	1510.99	0.0113328	1
The detection limit for this analysis is 0.1 ng/injection							Total ng PCB	1.9390646	
These analyses are accurate to no more than 2 significant digits									
							g used	1.9	
							mL total vol.	10	
							ppm PCB	51.028015	✓
							ul DCB used	5	
							conc (ng/ul)	96.8	
							DCB %R	117.07467	
	Homolog	ng/inj	Homolog	ng/inj	Homolog	ng/inj	Homolog	ppm	
	mono	0.0022	mono	0.011	mono	0.11	mono	0.3083331	
	di	0.0339	di	0.1695	di	1.695	di	15.324067	
	tri	0.078388	tri	0.39194	tri	3.9194	tri	26.44033	
	tetra	0.063572	tetra	0.31786	tetra	3.1786	tetra	8.8440215	
	penta	0.037806	penta	0.18903	penta	1.8903	penta	0.0182268	
	hexa	0.093254	hexa	0.46627	hexa	4.6627	hexa	0.0794313	
	hepta	0.06968	hepta	0.3484	hepta	3.484	hepta	0.0136061	
	octa	0.0122	octa	0.061	octa	0.61	octa	0	

WMNB 3/31/88, Webb McCall Calculations for New Bedford

STANDARDS (1:1 mixtures of aroclors 1242 and 1260)							SAMPLE #	R7007880330	
								0940SJR	
Total PCB Conc (ng/ul)		0.2		1		10	dilution used	0.002	
inj. Vol.		2		2		2	inj.vol	2	
peak ID	Peak Area	ng/injection	Peak Area	ng/injection	Peak Area	ng/injection	Peak Area	ng/injection	
11	64.69	0.0022	129.4	0.011	808.53	0.11	365.02	0.0453474	1
16	53.85	0.0058	142.17	0.029	1188.23	0.29	625.21	0.1495222	1
21	280.37	0.0226	1217.58	0.113	8960.16	1.13	6634.22	0.8244841	1
28	635.7	0.022	1930.84	0.11	13391	1.1	13025	1.0683826	1
32	526.49	0.0122	1451.45	0.061	10218	0.61	9395.92	0.5585177	1
37	1334.8	0.023	4371.44	0.115	29002	1.15	30995	1.2337478	2
40	905.52	0.0222	3206.76	0.111	22326	1.11	19976	0.9872101	1
47	640.58	0.0176	2201.91	0.088	15404	0.88	18441	1.0621912	2
54	406.75	0.0136	1717.22	0.068	12522	0.68	13149	0.7155143	2
58	310.33	0.0112	1620.32	0.056	13974	0.56	12377	0.4948463	1
70	814.87	0.026	3727.43	0.13	27216	1.3	27145	1.2964634	1
78	224.69	0.0072	1263.53	0.036	10771	0.36	8319.06	0.2764416	1
84	461.47	0.0148	1762.13	0.074	12916	0.74	13798	0.7926644	2
98+104	295.58	0.0138	1994.22	0.069	17635	0.69	17589.35	0.6881875	1
117+125	1224.47	0.0312	5790	0.156	41606	1.56	15145	0.5227193	1
146	1100	0.0302	6237.93	0.151	42500	1.51	10407	0.307245	1
160	207.23	0.0098	2205.94	0.049	18185	0.49	2781.68	0.0648896	1
174	870.5	0.0248	5597.02	0.124	43568	1.24	7001.66	0.1652836	1
203	1156.89	0.0186	6562	0.093	49737	0.93	3045.33	0.0445939	1
232+244	1219.45	0.0196	6683.2	0.098	52039	0.98	2447.49	0.0372213	1
280	2213.79	0.022	10676	0.11	84166	1.1	2050.41	0.0203764	0
332	898.86	0.0084	4489.79	0.042	36019	0.42	1129.15	0.0105548	1
372	1104.45	0.008	5253.04	0.04	43343	0.4	659.73	0.0047787	0
448	189.47	0.0012	1149.06	0.006	12883	0.06	132.86	0.0008415	0
528	511.12	0.003	2762.78	0.015	25287	0.15	184.47	0.0010827	0
	DCB area	ng/injection	Peak Area	ng/injection	Peak Area	ng/injection	DCB area	DCB ng/inj.	
DCB	436.37	0.00242	6712.4	0.0484	46898	0.484	284.01	0.001575	0
The detection limit for this analysis is 0.1 ng/injection							Total ng PCB	11.373108	
These analyses are accurate to no more than 2 significant digits									
dry weights used							g used	3.9	
							mL total vol.	10	
							ppm PCB	7290.4535	✓
							ul DCB used	10	
							conc (ng/ul)	484	
							DCB %R	81.355845	
	Homolog	ng/inj	Homolog	ng/inj	Homolog	ng/inj	Homolog	ppm	
	mono	0.0022	mono	0.011	mono	0.11	mono	29.068875	
	di	0.0339	di	0.1695	di	1.695	di	795.5782	
	tri	0.078388	tri	0.39194	tri	3.9194	tri	2446.7194	
	tetra	0.063572	tetra	0.31786	tetra	3.1786	tetra	2072.6684	
	penta	0.037806	penta	0.18903	penta	1.8903	penta	1125.6321	
	hexa	0.093254	hexa	0.46627	hexa	4.6627	hexa	728.66309	
	hepta	0.06968	hepta	0.3484	hepta	3.484	hepta	87.826715	
	octa	0.0122	octa	0.061	octa	0.61	octa	4.2967354	

WMNB 3/31/88, Webb McCall Calculations for New Bedford

SAMPLE #	R7007880331		SAMPLE #	R7007880331		SAMPLE #	R7007880331		SAMPLE #	R7007880331	
	1300SJR			1300SJR			1400SJR			1500SJR	
dilution used	0.02		dilution used	0.1		dilution used	0.2		dilution used	1	
inj.vol	2		inj.vol	2		inj.vol	2		inj.vol	2	
Peak Area	ng/injection		Peak Area	ng/injection		Peak Area	ng/injection		Peak Area	ng/injection	
494.07	0.06415967	1	1595.18	0.2246737	2	1712.45	0.2417687	2	6709.62	0.97022987	2
	0	0		0	0		0	0		0	0
3080.52	0.35770008	1	13050	1.66720688	2	6290.37	0.77931891	1	7380.36	0.9224908	1
182.14	0.00630341	0	2830.07	0.18768109	1	318.38	0.01101834	0	326.66	0.01130489	0
607.64	0.0164814	1	403.74	0.0093556	0	563.93	0.0141753	1	434.63	0.01007139	0
213.86	0.00368503	0	528.44	0.00910557	0	314.26	0.00541503	0	399.02	0.00687553	0
678.81	0.01664191	0	942.98	0.0236455	1	537.04	0.01316623	0	391.76	0.00960451	0
	0	0	444.18	0.01220389	0	358.8	0.00985807	0	435.09	0.01195414	0
	0	0	1059.66	0.04070349	1	668.3	0.02445742	1	499.74	0.01746018	1
	0	0		0	0		0	0		0	0
38.02	0.0012131	0	276.66	0.00882737	0		0	0	91.07	0.00290576	0
30	0.00096132	0	105	0.00336464	0		0	0	35	0.00112155	0
30.85	0.0009894	0	106.81	0.00342555	0		0	0	37.58	0.00120524	0
	0	0		0	0		0	0	111.56	0.0052085	0
181.28	0.00461909	0	207.46	0.00528617	0	60.68	0.00154615	0	255.71	0.0065156	0
76.79	0.00210823	0	470.12	0.01290693	0	75.31	0.0020676	0	491.78	0.0135016	0
	0	0		0	0		0	0		0	0
	0	0		0	0		0	0		0	0
	0	0		0	0		0	0		0	0
763.12	0.01226549	0	420.24	0.00675444	0	281.28	0.00452096	0	229.15	0.00368309	0
505.62	0.0050247	0	437.27	0.00434546	0	298.77	0.00296909	0	622.16	0.00618284	0
348.12	0.00325324	0	190.92	0.00178418	0	235.87	0.00220425	0	267	0.00249516	0
119.03	0.00086218	0	96.76	0.00070087	0	118.59	0.000859	0	86.52	0.0006267	0
452.69	0.00251666	1	447.37	0.00249005	1	441.11	0.00245874	1	439.01	0.00244823	1
707.39	0.004046	1	616.95	0.00356401	1	631.61	0.00364214	1	732.22	0.00417833	1
Peak Area	DCB ng/inj.		DCB area	DCB ng/inj.		DCB area	DCB ng/inj.		DCB area	DCB ng/inj.	
1869.13	0.01291681	1	6549.63	0.0472075	1	2826.72	0.01993239	1	10701	0.09163524	1
Total ng PCB	0.50283095		Total ng PCB	2.22802539		Total ng PCB	1.11944592		Total ng PCB	2.01006391	
g used	1.4		g used	1.4		g used	1.2		g used	1.8	
mL total vol.	10		mL total vol.	10		mL total vol.	10		mL total vol.	10	
ppm PCB	89.7912405		ppm PCB	79.5723355	✓	ppm PCB	23.32179	✓	ppm PCB	5.58351087	✓
ul DCB used	5		ul DCB used	5		ul DCB used	5		ul DCB used	5	
conc (ng/ul)	484		conc (ng/ul)	484		conc (ng/ul)	96.8		conc (ng/ul)	96.8	
DCB %R	133.438137		DCB %R	97.5361574		DCB %R	102.956566		DCB %R	94.6645067	
Homolog	ppm		Homolog	ppm		Homolog	ppm		Homolog	ppm	
mono	11.4570848		mono	8.02406072		mono	5.036848		mono	2.69508297	
di	64.1564175		di	61.218827		di	16.2931977		di	2.57032506	
tri	7.4171245		tri	7.01070139		tri	1.02273469		tri	0.11331099	
tetra	0.32546902		tetra	1.75383195		tetra	0.54676116		tetra	0.07454751	
penta	0.35730451		penta	0.25947046		penta	0.00601913		penta	0.0204421	
hexa	1.3025304		hexa	0.62817339		hexa	0.07868607		hexa	0.056341	
hepta	3.44944396		hepta	0.43602284		hepta	0.19254586		hepta	0.03331329	
octa	1.32586585		octa	0.24124769		octa	0.14499739		octa	0.02014796	

WMNB 4/01/88, Webb McCall Calculations for NewBedford

STANDARDS (1:1 mixtures of aroclors 1242 and 1260)							SAMPLE #	R7007880331	
								0700SJR	
Total PCB Conc (ng/ul)		0.2		1		10	dilution used	0.002	
inj. Vol.		2		2		2	inj.vol	2	
peak ID	Peak Area	ng/injection	Peak Area	ng/injection	Peak Area	ng/injection	Peak Area	ng/injection	
11	101.04	0.0022	170.64	0.011	1078.32	0.11	197.38	0.0139165	1
16	131.17	0.0058	259.71	0.029	1597.94	0.29	418.27	0.0599245	1
21	649.34	0.0226	1742.4	0.113	10719	1.13	3079.76	0.2645156	1
28	797.1	0.022	2523.65	0.11	15460	1.1	5680.65	0.3516006	1
32	769.95	0.0122	1995.45	0.061	12036	0.61	4020.18	0.1717088	1
37	1732.67	0.023	5398.05	0.115	33231	1.15	14298	0.4459548	1
40	1264.8	0.0222	4095.04	0.111	25360	1.11	8702.68	0.3274609	1
47	1046.72	0.0176	3056.86	0.088	17945	0.88	9075.96	0.4081963	1
54	599.65	0.0136	2288.44	0.068	14358	0.68	5710.56	0.2415223	1
58	530.76	0.0112	2315.83	0.056	16087	0.56	5556.05	0.1745862	1
70	1147.25	0.026	4850.18	0.13	30988	1.3	13445	0.5147275	1
78	316.99	0.0072	1692.7	0.036	12463	0.36	11215	0.3224568	1
84	542.27	0.0148	2345.49	0.074	14429	0.74	8568.95	0.4170149	1
98+104	522.89	0.0138	2834.44	0.069	20169	0.69	7551.29	0.2379783	1
117+125	1771.28	0.0312	7096.32	0.156	45164	1.56		0	0
146	2095.51	0.0302	7240.1	0.151	47568	1.51	5659.74	0.1138916	1
160	456.39	0.0098	2635.53	0.049	19325	0.49		0	0
174	1314.41	0.0248	6444.79	0.124	46339	1.24	2493.98	0.0476079	1
203	1660.09	0.0186	7576.07	0.093	52144	0.93	1125.27	0.0126078	0
232+244	1721.97	0.0196	7843.88	0.098	55052	0.98	387.74	0.0044134	0
280	2823.5	0.022	12080	0.11	88865	1.1	384.15	0.0029932	0
332	1174.01	0.0084	5265.81	0.042	38583	0.42		0	0
372	1368.31	0.008	6156.67	0.04	46654	0.4	65.26	0.0003816	0
448	298.93	0.0012	1542.66	0.006	14277	0.06		0	0
528	712.69	0.003	3260.9	0.015	28152	0.15	62.61	0.0002636	0
	Peak Area	ng/injection	Peak Area	ng/injection	Peak Area	ng/injection	DCB area	DCB ng/inj.	
DCB	483.98	0.00242	7679.98	0.0484	51667	0.484	174.15	0.0008708	0
The detection limit for this analysis is 0.1 ng/injection							Total ng PCB	4.133723	
These analyses are accurate to no more than 2 significant digits									
							g used	1.1	
dry weights							mL total vol.	10	
							ppm PCB	9394.825	✓
							ul DCB used	5	
							conc (ng/ul)	484	
							DCB %R	89.95723	
	Homolog	ng/inj	Homolog	ng/inj	Homolog	ng/inj	Homolog	ppm	
	mono	0.0022	mono	0.011	mono	0.11	mono	31.628437	
	di	0.0339	di	0.1695	di	1.695	di	937.13709	
	tri	0.078388	tri	0.39194	tri	3.9194	tri	2928.471	
	tetra	0.063572	tetra	0.31786	tetra	3.1786	tetra	3255.7176	
	penta	0.037806	penta	0.18903	penta	1.8903	penta	1700.1919	
	hexa	0.093254	hexa	0.46627	hexa	4.6627	hexa	498.59412	
	hepta	0.06968	hepta	0.3484	hepta	3.484	hepta	41.618698	
	octa	0.0122	octa	0.061	octa	0.61	octa	1.4661403	

WMNB 4/5/88, Webb McCall Calculations for New Bedford

STANDARDS (1:1 mixtures of aroclors 1242 and 1260)							SAMPLE #	R7007880405	
								0800SJR	
Total PCB Conc (ng/ul)		0.2		1		10	dilution used	0.01	
inj. Vol.		2		2		2	inj.vol	2	
peak ID	Peak Area	ng/injection	Peak Area	ng/injection	Peak Area	ng/injection	Peak Area	ng/injection	
11	104.28	0.0022	188.08	0.011	1183.49	0.11	143.81	0.00635112	1
16	41.36	0.0058	251.51	0.029	1589.59	0.29	182.53	0.02138479	1
21	315.65	0.0226	1411.43	0.113	11169	1.13	582.42	0.04460807	1
28	467.61	0.022	2155.88	0.11	16326	1.1	789.85	0.03879656	1
32	314.92	0.0122	1565.54	0.061	12598	0.61	344.23	0.0133437	1
37	1011.89	0.023	4326.56	0.115	34140	1.15	3200.79	0.0837538	1
40	735.17	0.0222	3454.01	0.111	26495	1.11	505.86	0.0152755	0
47	617.13	0.0176	2639.92	0.088	18721	0.88	1978.16	0.06496849	1
54	430.35	0.0136	1940.09	0.068	14917	0.68	827.82	0.02792192	1
58	390.04	0.0112	2002.77	0.056	16676	0.56	682.55	0.01932563	1
70	981.03	0.026	4118.86	0.13	32135	1.3	1071.04	0.02898328	1
78	298.5	0.0072	1388.09	0.036	12697	0.36	250	0.00603015	0
84	504.16	0.0148	2102.03	0.074	15262	0.74	266.71	0.00782947	0
98+104	540.87	0.0138	2627.51	0.069	20965	0.69	710.87	0.01829718	1
117+125	1125.44	0.0312	6346.9	0.156	46552	1.56	235.01	0.00651506	0
146	1232.94	0.0302	6170.52	0.151	48407	1.51	64.2	0.00157253	0
160	437.84	0.0098	2456.41	0.049	20347	0.49		0	0
174	1124.13	0.0248	5746.28	0.124	47898	1.24	37.76	0.00083304	0
203	1536.51	0.0186	6946.91	0.093	53943	0.93	219.54	0.00265761	0
232+244	1643.8	0.0196	7305.7	0.098	57051	0.98	317.4	0.00378455	0
280	2572.36	0.022	10893	0.11	91675	1.1	274.55	0.00234808	0
332	1004.24	0.0084	4626.99	0.042	39619	0.42	92.99	0.00077782	0
372	1220.33	0.008	6136.47	0.04	49554	0.4	149	0.00097678	0
448	247.03	0.0012	1641.19	0.006	15733	0.06		0	0
528	564	0.003	2915.81	0.015	31014	0.15	111.84	0.00059489	0
	Peak Area	ng/injection	Peak Area	ng/injection	Peak Area	ng/injection	DCB area	DCB ng/inj.	
DCB	362.6	0.00242	7223.56	0.0484	52007	0.484	2368.39	0.01586217	1
The detection limit for this analysis is 0.1 ng/injection							Total ng PCB	0.41693004	
These analyses are accurate to no more than 2 significant digits									
							g used	1.2	
All weights used are based on 1/2 wet soil weight.							mL total vol.	10	
							ppm PCB	173.720851	
							ul DCB used	10	
							conc (ng/ul)	484	
							DCB %R	163.865443	
	Homolog	ng/inj	Homolog	ng/inj	Homolog	ng/inj	Homolog	ppm	
	mono	0.0022	mono	0.011	mono	0.11	mono	2.64630072	
	di	0.0339	di	0.1695	di	1.695	di	31.5383355	
	tri	0.078388	tri	0.39194	tri	3.9194	tri	62.7852698	
	tetra	0.063572	tetra	0.31786	tetra	3.1786	tetra	54.0042035	
	penta	0.037806	penta	0.18903	penta	1.8903	penta	12.7645734	
	hexa	0.093254	hexa	0.46627	hexa	4.6627	hexa	5.6090366	
	hepta	0.06968	hepta	0.3484	hepta	3.484	hepta	3.71826554	
	octa	0.0122	octa	0.061	octa	0.61	octa	0.65486608	

WMNB 4/5/88, Webb McCall Calculations for New Bedford

SAMPLE #	R7007880405		SAMPLE #	R7007880404		SAMPLE #	R7007880405		SAMPLE #	R7007880405	
	1300SJR			1200SJR			1400SJR			0700SJR	
dilution used	1		dilution used	0.01		dilution used	1		dilution used	0.01	
inj.vol	2		inj.vol	2		inj.vol	2		inj.vol	2	
Peak Area	ng/injection		Peak Area	ng/injection		Peak Area	ng/injection		Peak Area	ng/injection	
582.42	0.05021968	1	65.4	0.00137975	0	598.79	0.05184778	1	198.7	0.01205623	1
	0	0	102.96	0.01260048	1		0	0		0	0
2705.88	0.24791634	1	2597.76	0.23664734	1	1023.46	0.08099313	1	1349.4	0.10788263	1
532.78	0.02539694	1	4292.99	0.25930988	1	203.57	0.00957751	0	1942	0.09885164	1
144.16	0.00558476	0	1955.65	0.08041275	1		0	0	891.18	0.03468604	1
1225.72	0.02893494	1	15455	0.50133366	1	119.22	0.00270984	0	7663.35	0.23083962	1
289.56	0.00874387	0	2820.25	0.09030077	1	215.43	0.00650536	0	1245.51	0.03886821	1
824.93	0.02483215	1	8878.97	0.39527585	1	153.31	0.00437227	0	4566.52	0.18288587	1
314.98	0.00995406	0	4199.13	0.17453788	1	472.61	0.01512274	1	1976.62	0.06972278	1
245.26	0.00704264	0	4172.79	0.13053642	1	135.14	0.00388055	0	1927.48	0.05390852	1
401.43	0.010639	0	7088.34	0.25401036	1	99.2	0.00262907	0	3462.01	0.10822941	1
200	0.00482412	0	3150	0.08647868	1	109.14	0.00263252	0	1500	0.03920622	1
184.74	0.00542318	0	3178.59	0.12848257	1	74.4	0.00218407	0	1574.44	0.05445315	1
342.54	0.00873972	0	6024.46	0.18403788	1		0	0	2766.72	0.07371435	1
418.06	0.01158966	0	4864.65	0.12057221	1	117.32	0.0032524	0	1784.77	0.04695888	1
212.62	0.00520798	0	2844.43	0.06962579	1		0	0	995.82	0.02439191	0
	0	0		0	0		0	0		0	0
138.27	0.00305044	0	1763.73	0.03852701	1		0	0	170.14	0.00375354	0
125.21	0.00151571	0	912.26	0.01104323	0	93.06	0.00112652	0	85.31	0.00103271	0
	0	0	434.82	0.00518462	0	129.28	0.00154148	0	62.29	0.00074272	0
94.14	0.00080513	0	482.9	0.00412998	0		0	0	115.16	0.0009849	0
	0	0	218.05	0.00182389	0		0	0		0	0
	0	0	261.95	0.00171724	0	161	0.00105545	0	79.66	0.00052222	0
	0	0	40.47	0.00019659	0		0	0		0	0
	0	0	77.85	0.0004141	0		0	0		0	0
DCB area	DCB ng/inj.		DCB area	DCB ng/inj.		DCB area	DCB ng/inj.		DCB area	DCB ng/inj.	
10840	0.08357642	1	1318.67	0.00882728	1	10338	0.07869357	1	1302.48	0.00871878	1
Total ng PCB	0.46042033		Total ng PCB	2.78857893		Total ng PCB	0.1894307		Total ng PCB	1.18369156	
g used	1		g used	3.2		g used	1.6		g used	1.3	
mL total vol.	10		mL total vol.	10		mL total vol.	10		mL total vol.	10	
ppm PCB	2.30210166	✓	ppm PCB	435.715457	✓	ppm PCB	0.59197094	✓	ppm PCB	455.265984	✓
ul DCB used	5		ul DCB used	10		ul DCB used	5		ul DCB used	10	
conc (ng/ul)	96.8		conc (ng/ul)	484		conc (ng/ul)	96.8		conc (ng/ul)	484	
DCB %R	86.3392808		DCB %R	91.1909193		DCB %R	81.2950055		DCB %R	90.0700485	
Homolog	ppm		Homolog	ppm		Homolog	ppm		Homolog	ppm	
mono	0.25109839		mono	0.21558544		mono	0.16202432		mono	4.6370108	
di	1.27132789		di	49.0742639		di	0.26058596		di	50.9982846	
tri	0.32798057		tri	144.394858		tri	0.06684012		tri	154.438891	
tetra	0.2546091		tetra	142.121671		tetra	0.07151316		tetra	153.676058	
penta	0.08313522		penta	55.6693058		penta	0.01042746		penta	56.6319082	
hexa	0.10310413		hexa	40.6637017		hexa	0.00977786		hexa	33.6895976	
hepta	0.01084634		hepta	3.21233306		hepta	0.00750377		hepta	0.99337946	
octa	0		octa	0.3637387		octa	0.00329829		octa	0.20085362	

WMNB 4/28/88, Webb McCall Calculations for New Bedford

	A	B	C	D	E	F	G	H	I	J
1	STANDARDS (1:1 mixtures of aroclors 1242 and 1260)							SAMPLE #	R70078803	
2									291240CRG	
3	Total PCB Conc (ng/ul)		0.2		1		10	dilution used	0.00001	
4	inj. Vol.		2		2		2	inj.vol	2	
5	peak ID	Peak Area	ng/injection	Peak Area	ng/injection	Peak Area	ng/injection	Peak Area	ng/injection	
6	11	196.99	0.0022	556.64	0.011	1111.32	0.11	176.72	0.0019736	0
7	16	138.44	0.0058	408	0.029	2160.28	0.29	127.15	0.005327	0
8	21	496.31	0.0226	2442.56	0.113	15412	1.13	762.38	0.0349585	1
9	28	956.9	0.022	3768.35	0.11	23269	1.1	1210.73	0.029945	1
10	32	658.33	0.0122	2793.16	0.061	18029	0.61	486.13	0.0090088	0
11	37	2026.17	0.023	7281.34	0.115	49473	1.15	3597.57	0.0505098	1
12	40	1497.41	0.0222	5762.21	0.111	38009	1.11		0	0
13	47	1641.19	0.0176	4417.69	0.088	46533	0.88	1508.82	0.0161805	0
14	54	904.65	0.0136	3264.16	0.068	21303	0.68	535.38	0.0080486	0
15	58	934.83	0.0112	3449.68	0.056	23173	0.56	430.43	0.0051569	0
16	70	1790.75	0.026	6919.68	0.13	45640	1.3	776.59	0.0112754	0
17	78	562.25	0.0072	2501.94	0.036	18504	0.36		0	0
18	84	873.15	0.0148	3424.27	0.074	20731	0.74	335.05	0.0056791	0
19	98+104	1146.93	0.0138	4366.71	0.069	28916	0.69	220.4538	0.0026525	0
20	117+125	2541.2	0.0312	9892.8	0.156	64990	1.56	92.3272	0.0011336	0
21	146	2868.41	0.0302	10208	0.151	69181	1.51	435.48	0.0045849	0
22	160	1007.74	0.0098	4058.84	0.049	28717	0.49		0	0
23	174	2466.39	0.0248	9719.7	0.124	70198	1.24	81.3248	0.0008177	0
24	203	2741.31	0.0186	10751	0.093	75407	0.93		0	0
25	232+244	2750.56	0.0196	11172	0.098	78587	0.98	161.44	0.0011504	0
26	280	4043.64	0.022	17269	0.11	129522	1.1	19566	0.1302581	1
27	332	1774.2	0.0084	7461.71	0.042	54862	0.42		0	0
28	372	2130.28	0.008	9246.08	0.04	65529	0.4		0	0
29	448	533.34	0.0012	2647.79	0.006	19552	0.06		0	0
30	528	1145.61	0.003	5153.45	0.015	38719	0.15		0	0
31		Peak Area	ng/injection	Peak Area	ng/injection	Peak Area	ng/injection	DCB area	DCB ng/inj.	
32	DCB	1180.5	0.00296	6257.75	0.0296	45264	0.296		0	0
33										
34	The detection limit for this analysis is 0.1 ng/injection							Total ng PCB	0.3186605	
35	These analyses are accurate to no more than 2 significant digits									
36								g used	1527.8	
37								mL total vol.	25	
38										
39								ppm PCB	260.71844	✓
40										
41								ul DCB used		
42								conc (ng/ul)		
43								DCB %R	#DIV/0!	
44										
45		Homolog	ng/inj	Homolog	ng/inj	Homolog	ng/inj	Homolog	ppm	
46		mono	0.0022	mono	0.011	mono	0.11	mono	1.614759	
47		di	0.0339	di	0.1695	di	1.695	di	39.085413	
48		tri	0.078388	tri	0.39194	tri	3.9194	tri	69.244555	
49		tetra	0.063572	tetra	0.31786	tetra	3.1786	tetra	28.419483	
50		penta	0.037806	penta	0.18903	penta	1.8903	penta	9.2266132	
51		hexa	0.093254	hexa	0.46627	hexa	4.6627	hexa	5.7072772	
52		hepta	0.06968	hepta	0.3484	hepta	3.484	hepta	107.42034	
53		octa	0.0122	octa	0.061	octa	0.61	octa	0	

WMNB 4/28/88, Webb McCall Calculations for New Bedford

	W	X	Y	Z	AA	AB	AC	AD	AE	AF	AG	AH
1	SAMPLE #	R70078804		SAMPLE #	R70078804		SAMPLE #	R70078804		SAMPLE #	R70078804	
2		271345SRG			271350SRG			271400SRG			271405SRG	
3	dilution used	1		dilution used	1		dilution used	1		dilution used	1	
4	inj.vol	2		inj.vol	2		inj.vol	2		inj.vol	2	
5	Peak Area	ng/injection		Peak Area	ng/injection		Peak Area	ng/injection		Peak Area	ng/injection	
6	3231.67	0.4884428	2	3568.96	0.54864275	2	67896	12.0298156	2	69054	12.2364969	2
7		0	0		0	0	21.6876	0.00090861	0	81.2722	0.00340493	0
8	1754.99	0.08106354	1	2039.05	0.09425765	1	4665.82	0.28733717	1	4775.84	0.2959644	1
9	654.39	0.01504502	0	3193.26	0.09199935	1	2701.3	0.07660072	1	2860.13	0.08157219	1
10	159.25	0.00295118	0	1952.73	0.04178864	1	760.6	0.01453779	1	1002.96	0.02007788	1
11	876.9	0.0099541	0	9529.92	0.17015972	1	3072.31	0.04131432	1	3879.65	0.05544808	1
12	330.73	0.00490327	0	6006.18	0.11855815	1	1917.49	0.03094674	1	2747.36	0.04822597	1
13	909.51	0.00975352	0	10176	0.19628797	1	13426	0.25740589	1	17367	0.33151841	1
14	600.62	0.00902938	0	6749.7	0.1862532	1	1962.18	0.03798203	1	2158.03	0.04249747	1
15	2673.67	0.04217602	1	10318	0.23150966	1	15622	0.36704547	1	17742	0.4212189	1
16	1774.14	0.02575884	0	18340	0.4750843	1	10676	0.24350357	1	12723	0.30535714	1
17	787.08	0.01053822	1		0	0	2630.88	0.0386107	1	2958.65	0.04524719	1
18	1687.37	0.03369438	1	13091	0.44599645	1	5190.67	0.14197485	1	6058.19	0.17535888	1
19	2903.03	0.04390663	1	10551	0.22543809	1	4100.27	0.06443215	1	3657.59	0.05684283	1
20	2041.19	0.02506105	0	5479.33	0.08107739	1	2217.41	0.02722462	0	2566.22	0.03162474	1
21	3417.83	0.03924273	1	5342.08	0.07091336	1		0	0		0	0
22		0	0		0	0	2556.52	0.02969845	1	2450.17	0.02833209	1
23		0	0	2710.36	0.02813666	1		0	0		0	0
24	3150.83	0.02240393	1	2044.88	0.01387467	0	1742.54	0.01182327	0	2381.17	0.01615642	0
25		0	0	2646.14	0.01885592	0	1564.89	0.01115113	0	1709	0.01217803	0
26	3703.47	0.02014926	0	3406.59	0.01853404	0	938.48	0.00510593	0	1240.59	0.00674961	0
27	2107.14	0.0103669	1	1946.92	0.00942037	1		0	0	901.75	0.00426936	0
28	3135.67	0.01252127	1	2773.29	0.01089164	1	728.6	0.00273617	0		0	0
29	3277.58	0.00801185	1	1590.77	0.00360047	1		0	0	237.93	0.00053534	0
30		0	0	2921.39	0.00831692	1		0	0		0	0
31	DCB area	DCB ng/inj.		DCB area	DCB ng/inj.		DCB area	DCB ng/inj.		DCB area	DCB ng/inj.	
32	13418	0.07850218	1	13092	0.0762757	1	11324	0.06420084	1	10932	0.06152361	1
33												
34	Total ng PCB	0.91497387		Total ng PCB	3.08959737		Total ng PCB	13.7201552		Total ng PCB	14.2190768	
35												
36	g used	2.3		g used	2.5		g used	2.6		g used	2.6	
37	mL total vol.	10		mL total vol.	10		mL total vol.	10		mL total vol.	10	
38												
39	~~ppm PCB~~	~~1.98907363~~		~~ppm PCB~~	~~6.17919474~~		~~ppm PCB~~	~~26.3849138~~		~~ppm PCB~~	~~27.3443784~~	
40												
41	ul DCB used	5		ul DCB used	5		ul DCB used	5		ul DCB used	5	
42	conc (ng/ul)	88.8		conc (ng/ul)	88.8		conc (ng/ul)	88.8		conc (ng/ul)	88.8	
43	DCB %R	88.4033542		DCB %R	85.8960637		DCB %R	72.2982428		DCB %R	69.2833413	
44												
45	Homolog	ppm		Homolog	ppm		Homolog	ppm		Homolog	ppm	
46	~~mono~~	~~1.06183216~~		~~mono~~	~~1.0972855~~		~~mono~~	~~29.1942608~~		~~mono~~	~~23.5317249~~	
47	di	0.18440174		di	0.23451497		di	0.59114607		di	0.61492765	
48	tri	0.06972177		tri	0.92193917		tri	0.30150665		tri	0.38260623	
49	tetra	0.18870916		tetra	1.77979426		tetra	1.65653374		tetra	2.00627188	
50	penta	0.17092349		penta	1.52774008		penta	0.50680313		penta	0.59571367	
51	hexa	0.15867485		hexa	0.45747883		hexa	0.11126286		hexa	0.11463152	
52	hepta	0.11017325		hepta	0.11482389		hepta	0.07813869		hepta	0.09747311	
53	octa	0.04463722		octa	0.04561805		octa	0.00526186		octa	0.00102949	

Ok except mono Ok except mono Ok except mono Ok except mono

WMNB06/18, Webb McCall Calculations for New Bedford

	A	B	C	D	E	F	G	H	I	J
1	STANDARDS (1:1 mixtures of aroclors 1242 and 1260)							SAMPLE #	R50U18B	
2								1 ppm std to check RT's		
3	Total PCB Conc (ng/ul)		0.2		1		10	dilution used	1	
4	inj. Vol.		2		2		2	inj.vol	2	
5	peak ID	Peak Area	ng/injection	Peak Area	ng/injection	Peak Area	ng/injection	Peak Area	ng/injection	
6	11	62.5416	0.011	62.5416	0.011	606.06	0.11	53.98	0.0094942	0
7	16	102.44	0.029	102.44	0.029	830.16	0.29	96	0.0271769	0
8	21	239.87	0.0226	809.63	0.113	5661.71	1.13	733.68	0.1009495	1
9	28	305.87	0.022	1196.16	0.11	8097.93	1.1	1095.43	0.1000434	1
10	32	202.41	0.0122	867.01	0.061	6315.35	0.61	787.79	0.0551831	1
11	37	585.32	0.023	2506.14	0.115	17483	1.15	2322.23	0.1061914	1
12	40	354.03	0.0222	1788.21	0.111	12903	1.11	1625.12	0.100902	1
13	47	289.44	0.0176	1320.14	0.088	9187.29	0.88	1191.6	0.0792203	1
14	54	204.56	0.0136	1068.49	0.068	7530.82	0.68	981.72	0.0625363	1
15	58	199.76	0.0112	1105.33	0.056	8147.77	0.56	990.75	0.0503315	1
16	70	522.11	0.026	2362.54	0.13	15811	1.3	2189.06	0.1201969	1
17	78	874.59	0.036	874.59	0.036	6885.12	0.36	825.7	0.0339876	0
18	84	1167.37	0.074	1167.37	0.074	6782.73	0.74	1008.86	0.063952	0
19	98+104	328.43	0.0138	1407.85	0.069	10450	0.69	1214.47	0.0591108	1
20	117+125	805.54	0.0312	3114.1	0.156	21211	1.56	2791.23	0.1385458	1
21	146	625.73	0.0302	2846.95	0.151	18975	1.51	2617.52	0.1385226	1
22	160	260.01	0.0098	1245.54	0.049	8397.18	0.49	1105.69	0.0434374	1
23	174	673.12	0.0248	3034.1	0.124	20460	1.24	2787.04	0.1136194	1
24	203	669.17	0.0186	2933.44	0.093	18569	0.93	2638.68	0.0833147	1
25	232+244	764.4	0.0196	3421.49	0.098	22190	0.98	3098.78	0.0884781	1
26	280	1091.83	0.022	4748.65	0.11	32509	1.1	4322.09	0.099735	1
27	332	441.69	0.0084	2183.01	0.042	15595	0.42	2016.84	0.0387936	1
28	372	560.44	0.008	2682.34	0.04	18303	0.4	2280.77	0.033944	1
29	448	152.56	0.0012	754.59	0.006	6038.39	0.06	620.39	0.00493	1
30	528	267.99	0.003	1448	0.015	12037	0.15	1312.1	0.013618	1
31		Peak Area	ng/injection	Peak Area	ng/injection	Peak Area	ng/injection	DCB area	DCB ng/inj.	
32	DCB	390.16	0.00592	3263.21	0.0592	24948	0.592		0	0
33										
34	The detection limit for this analysis is 0.1 ng/injection							Total ng PCB	1.7662144	
35	*These analyses are accurate to no more than 2 significant digits*									
36								g used	1	
37								mL total vol.	1	
38										
39								ppm PCB	0.8831072	
40										
41								ul DCB used		
42								conc (ng/ul)		
43								DCB %R	#DIV/0!	
44										
45		Homolog	ng/inj	Homolog	ng/inj	Homolog	ng/inj	Homolog	ppm	%
46		mono	0.011	mono	0.011	mono	0.11	mono	0.0047471	86
47		di	0.0571	di	0.1695	di	1.695	di	0.0765686	90
48		tri	0.078388	tri	0.39194	tri	3.9194	tri	0.178973	91
49		tetra	0.092372	tetra	0.31786	tetra	3.1786	tetra	0.1453893	91
50		penta	0.097006	penta	0.18903	penta	1.8903	penta	0.0830514	88
51		hexa	0.093254	hexa	0.46627	hexa	4.6627	hexa	0.2107014	90
52		hepta	0.06968	hepta	0.3484	hepta	3.484	hepta	0.1574304	90
53		octa	0.0122	octa	0.061	octa	0.61	octa	0.026246	86
54								"%"=% of theoretical ppm		

	W	X	Y	Z	AA	AB	AC	AD	AE	AF	AG	AH
1	SAMPLE #	R70078804		SAMPLE #	R70078806		SAMPLE #	R70078806		SAMPLE #	R70078804	
2		220925RRG			181550RTG			181540RTG			221035WRG	
3	dilution used	1		dilution used	1		dilution used	1		dilution used	1	
4	inj.vol	2		inj.vol	2		inj.vol	2		nj.vol	2	
5	Peak Area	ng/injection		Peak Area	ng/injection		Peak Area	ng/injection		Peak Area	ng/injection	
6	1519.86	0.27644552	2	1528.04	0.27793547	2	1677.25	0.30511356	2	308.78	0.0558515	1
7	467.94	0.16008819	1		0	0	590.53	0.20405564	1	286.36	0.0949637	1
8	229.75	0.02164652	0	897.7	0.13145955	1	256.82	0.02528934	1	111.91	0.0105439	0
9	243.64	0.01752405	0	781.01	0.06896483	1	268.37	0.01930278	0	244.74	0.0176032	0
10		0	0	490.97	0.03338828	1		0	0	86.9611	0.0052415	0
11	70.6517	0.00277624	0	1459.98	0.0648929	1	135.49	0.00532404	0	225.31	0.0088535	0
12	41.3858	0.00259516	0	965.99	0.06009067	1	89.0037	0.00558111	0		0	0
13		0	0	673.24	0.04381473	1		0	0		0	0
14	32.2865	0.00214654	0	577.43	0.0370789	1		0	0		0	0
15	106.58	0.00597565	0	658.84	0.03391142	1	127.06	0.00712391	0	45.3055	0.0025402	0
16		0	0	1047.77	0.05570428	1		0	0		0	0
17		0	0	715.83	0.0294651	0		0	0		0	0
18		0	0		0	0		0	0		0	0
19		0	0	426.99	0.01884022	1		0	0	37.1354	0.0015604	0
20		0	0	321.88	0.01246699	0		0	0		0	0
21		0	0	119.38	0.00576171	0		0	0		0	0
22		0	0		0	0		0	0		0	0
23		0	0	159.55	0.00587836	0		0	0		0	0
24		0	0		0	0		0	0		0	0
25	752.33	0.01929051	0	152.18	0.00390205	0		0	0		0	0
26		0	0	177.97	0.00358603	0	89.0273	0.00179387	0	92.0563	0.0018549	0
27		0	0		0	0		0	0		0	0
28		0	0	115.83	0.00165342	0	45.4583	0.00064889	0	46.2291	0.0006599	0
29		0	0		0	0		0	0		0	0
30		0	0		0	0		0	0		0	0
31	DCB area	DCB ng/inj.		DCB area	DCB ng/inj.		DCB area	DCB ng/inj.		DCB area	DCB ng/inj.	
32	5786.43	0.12119606	1	5637.82	0.11754468	1	5508.13	0.11435817	1	6342.12	0.1348495	1
33												
34	Total ng PCB	0.50848838	✓	Total ng PCB	0.8887949	✓	Total ng PCB	0.57423315	✓	Total ng PCB	0.1996725	✓
35												
36	g used	4.1		g used	4.1		g used	4.2		g used	3.6	
37	mL total vol.	10		mL total vol.	10		mL total vol.	10		mL total vol.	10	
38												
39	ppm PCB	0.62010778	✓	ppm PCB	1.08389622	✓	ppm PCB	0.68361089	✓	ppm PCB	0.277323	✓
40												
41	ul DCB used	5		ul DCB used	5		ul DCB used	5		ul DCB used	5	
42	conc (ng/ul)	118		conc (ng/ul)	118		conc (ng/ul)	118		conc (ng/ul)	118	
43	DCB %R	102.708528		DCB %R	99.6141385		DCB %R	96.9137051		DCB %R	114.27923	
44												
45	Homolog	ppm		Homolog	ppm		Homolog	ppm		Homolog	ppm	
46	mono	0.33712868		mono	0.3389457		mono	0.36323043		mono	0.0775715	
47	di	0.22697039		di	0.18134238		di	0.27877461		di	0.1526506	
48	tri	0.02344243		tri	0.27113599		tri	0.0302,695		tri	0.037913	
49	tetra	0.00904126		tetra	0.20924896		tetra	0.00848084		tetra	0.003528	
50	penta	0		penta	0.0388782		penta	0		penta	0.0016037	
51	hexa	0.0023525		hexa	0.03367267		hexa	0		hexa	0.0005635	
52	hepta	0.02117251		hepta	0.00865595		hepta	0.00213556		hepta	0.0025763	
53	octa	0		octa	0.00201636		octa	0.00077249		octa	0.0009165	
54												

WMNB06/20, Webb McCall Calculations for New Bedford

	K	L	M	N	O	P	Q	R	S	T	U	V
1	SAMPLE #	R70078804		SAMPLE #	R70078804		SAMPLE #	R70078804		SAMPLE #	HEXU20A	
2		250938WRG			221035WRG			221050WRG				
3	dilution used	1		dilution used	1		dilution used	1		dilution used	1	
4	inj.vol	2		inj.vol	2		inj.vol	2		inj.vol	2	
5	Peak Area	ng/injection		Peak Area	ng/injection		Peak Area	ng/injection		Peak Area	ng/injection	
6	6721.86	1.2686599	2	1390.78	0.25906708	2	135.05	0.0212586	1		0	0
7		0	0		0	0		0	0	56.1354	0.01202629	1
8	638.7	0.0824558	1	876.65	0.11908882	1	185.32	0.01818519	0		0	0
9	355.71	0.0263926	1	417.85	0.03226007	1	113.68	0.00808875	0		0	0
10	90.3868	0.0054859	0		0	0	111.66	0.00677704	0		0	0
11	64.5867	0.0024832	0	69.8721	0.0026864	0		0	0	166.86	0.00641533	0
12	275.67	0.0169375	0	149.55	0.00918856	0		0	0		0	0
13	187.89	0.010495	0		0	0		0	0		0	0
14		0	0		0	0		0	0		0	0
15	292.88	0.0165258	1	74.2654	0.00419198	0	25.6042	0.00144525	0		0	0
16	130.43	0.0059187	0	40.7215	0.00184788	0		0	0		0	0
17	100.55	0.003607	0	57.3076	0.00205578	0	119.43	0.00428427	0		0	0
18		0	0	42.8053	0.00171393	0		0	0		0	0
19		0	0		0	0		0	0	67.0303	0.00207963	0
20		0	0		0	0		0	0		0	0
21		0	0		0	0		0	0	74.0718	0.00293096	0
22	142.87	0.0047886	0		0	0		0	0		0	0
23		0	0		0	0		0	0		0	0
24		0	0		0	0		0	0		0	0
25		0	0		0	0	6098.62	0.22590397	1	188.06	0.00412791	0
26	93.4739	0.0015438	0	81.5104	0.00134623	0	12368	0.37577968	1	142.18	0.00234825	0
27		0	0		0	0		0	0		0	0
28		0	0		0	0		0	0	53.677	0.00059907	0
29		0	0		0	0		0	0		0	0
30		0	0		0	0		0	0		0	0
31	DCB area	DCB ng/inj.		DCB area	DCB ng/inj.		DCB area	DCB ng/inj.		DCB area	DCB ng/inj.	
32	10874	0.250343	1	11394	0.26400713	1	14191	0.33750465	1		0	0
33												
34	Total ng PCB	1.4452938	✓	Total ng PCB	0.43344672	✓	Total ng PCB	0.66172276	✓	Total ng PCB	0.03052744	
35												
36	g used	10.2		g used	11		g used	10.9		g used	1	
37	mL total vol.	5		mL total vol.	5		mL total vol.	5		mL total vol.	1	
38												
39	ppm PCB	0.3542387	✓	ppm PCB	0.09851062	✓	ppm PCB	0.15177127	✓	ppm PCB	0.01526372	
40												
41	ul DCB used	5		ul DCB used	5		ul DCB used	5		ul DCB used		
42	conc (ng/ul)	118		conc (ng/ul)	118		conc (ng/ul)	118		conc (ng/ul)		
43	DCB %R	106.07752		DCB %R	111.867429		DCB %R	143.010447		DCB %R	#DIV/0!	
44												
45	Homolog	ppm		Homolog	ppm		Homolog	ppm		Homolog	ppm	
46	mono	0.3109461		mono	0.05887888		mono	0.00487583		mono	0	
47	di	0.0218269		di	0.0288086		di	0.00463472		di	0.00601315	
48	tri	0.0109561		tri	0.00819773		tri	0.00294578		tri	0.00320767	
49	tetra	0.0085368		tetra	0.00171812		tetra	0.00131411		tetra	0	
50	penta	0.0004207		penta	0.00051132		penta	0		penta	0.00084274	
51	hexa	0.0005868		hexa	0		hexa	0.00518128		hexa	0.00186895	
52	hepta	0.0009652		hepta	0.00030596		hepta	0.13281955		hepta	0.00303168	
53	octa	0		octa	0		octa	0		octa	0.00029954	

Webb McCall Calculations for New Bedford Samples

	K	L	M	N	O	P	Q	R	S	T	U	V
1	SAMPLE #	R70078809		SAMPLE #	R70078809		SAMPLE #	R70078809		SAMPLE #	R70078809	
2		081410SEM			071420SEM			081430SEM			081440SEM	
3	dilution used	1		dilution used	1		dilution used	1		dilution used	1	
4	inj.vol	2		inj.vol	2		inj.vol	2		inj.vol	2	
5	Peak Area	ng/injection		Peak Area	ng/injection		Peak Area	ng/injection		Peak Area	ng/injection	
6	1351.32	0.0636207	1	1352	0.0636521	1	13823	0.76620607	1	14021	0.78017038	1
7	693.24	0.1311015	1	328.59	0.05678304	1	2009.19	0.39930198	2	2211.21	0.44047518	2
8	82.6224	0.0054999	0	3437.37	0.36667472	1	2017.8	0.18222666	1	1952.65	0.17376156	1
9	243.54	0.009434	0	5529.49	0.39741213	1	1190.41	0.05393452	1	1445.83	0.0670381	1
10	21.8019	0.0006867	0	4075.69	0.2044745	1	182.16	0.00573717	0	304.41	0.00958747	0
11	93.952	0.0021076	0	10136	0.38604872	1	442.93	0.00993591	0	527.89	0.01184176	0
12	37.2195	0.0010296	0	8378.04	0.38901043	1	545.09	0.01507913	0	104.1	0.00287978	0
13	96.1346	0.0023587	0	6161.9	0.2866923	1	349.1	0.0085652	0	874.24	0.02268555	1
14		0	0	4724.98	0.23221608	1		0	0		0	0
15		0	0	5272.07	0.18652296	1		0	0	61.6243	0.00159689	0
16		0	0	7618.91	0.33052801	1	165.62	0.00466823	0	202.2	0.00569929	0
17		0	0	5693.06	0.2189362	1		0	0		0	0
18		0	0	3288.48	0.08845379	1		0	0		0	0
19		0	0	1885.72	0.04331486	1	120.44	0.00258848	0	57.4514	0.00123474	0
20	124	0.003054	0	1183.78	0.02915572	0	123.94	0.00305256	0		0	0
21		0	0		0	0		0	0		0	0
22		0	0	327.79	0.00759823	0		0	0		0	0
23		0	0	302.53	0.0050867	0		0	0		0	0
24	49.9379	0.0008035	0	244.64	0.00393615	0		0	0		0	0
25	178.04	0.0022506	0	344.89	0.00435983	0	79.5416	0.0010055	0	49.5416	0.00062627	0
26		0	0	64.9109	0.00076047	0		0	0		0	0
27	101.97	0.0007664	0	252.89	0.00190075	0	80.2447	0.00060313	0	75.177	0.00056504	0
28	26.6927	0.000106	0	82.7976	0.00032882	0	65.4029	0.00025974	0	26.4293	0.00010496	0
29		0	0	108.38	0.0006631	0	90.3145	0.00055257	0	18.279	0.00011184	0
30	DCB area	DCB ng/inj.		DCB area	DCB ng/inj.		DCB area	DCB ng/inj.		DCB area	DCB ng/inj.	
31	13944	0.1393262	1	12382	0.12009439	1	19474	0.20741318	1	17505	0.18317027	1
32												
33	Total ng PCB	0.2228192		Total ng PCB	3.30450961		Total ng PCB	1.45371687		Total ng PCB	1.51837879	
34												
35	g used	2.42		g used	2.6		g used	2.6		g used	2.8	
36	mL total vol.	10		mL total vol.	10		mL total vol.	10		mL total vol.	10	
37												
38	ppm PCB	0.4603702		ppm PCB	6.35482618		ppm PCB	2.79560936		ppm PCB	2.7113907	
39												
40	ul DCB used	5		ul DCB used	5		ul DCB used	5		ul DCB used	5	
41	conc (ng/ul)	296		conc (ng/ul)	296		conc (ng/ul)	296		conc (ng/ul)	296	
42	DCB %R	47.06966		DCB %R	40.5724292		DCB %R	70.0720205		DCB %R	61.8818491	
43												
44	Homolog	ppm		Homolog	ppm		Homolog	ppm		Homolog	ppm	
45	mono	0.1314477		mono	0.12240788		mono	1.47347322		mono	1.39316139	
46	di	0.2871071		di	1.00540538		di	1.14425436		di	1.12677904	
47	tri	0.0225194		tri	2.60427703		tri	0.13692904		tri	0.13319209	
48	tetra	0.0048733		tetra	1.79946896		tetra	0.02284547		tetra	0.05058739	
49	penta	0.0003155		penta	0.60509952		penta	0.0034943		penta	0.00321601	
50	hexa	0.0061605		hexa	0.18714136		hexa	0.0099573		hexa	0.0019403	
51	hepta	0.0061442		hepta	0.0254632		hepta	0.00193366		hepta	0.00111833	
52	octa	0.0018025		octa	0.00556284		octa	0.00272201		octa	0.00139614	

Understanding Reagent Spreadsheets

The concentrations of reagents in samples are calculated by a procedure developed by GRC. The reagents DMSO, TMH and PEG 400 are injected together. They produce a distinctive peak pattern. DMSO produces only one peak. TMH produces 2 peaks, but only the largest one is used for quantitation. PEG 400 produces a series of peaks, the heights of the four largest peaks are summed and used for quantitation.

As a general rule for liquid chromatography, standards should bracket samples. In other words, it is best to have a standard of higher concentration and a standard of lower concentration for calculation of sample concentration. That way the sample concentration can be calculated by linear interpolation, which will greatly reduce inaccuracy caused by nonlinear detector response. The micrograms of reagent represented by each peak in a sample is calculated by linear interpolation between two standards having the same peak at higher and lower concentrations. The equation for the calculation is listed below:

$$ug_{ix} = ug_{ih} - [(H_{ih}-H_{il})(ug_{ih}-ug_{il})/(H_{ih}-H_{ix})]$$

where i refers to a peak name,
x refers to the sample,
h refers to the higher standard,
l refers to the lower standard, and
H is a peak height.

The number of micrograms of analyte "i" in an injection is calculated from the concentration of that analyte in the standard and the injection volume as follows. (Remember that mg/mL = ug/uL)

$$ug_{is} = C_{is} * V_{js}$$

where C_{is} = the concentration of "i" in the standard (in mg/mL)
V_{js} = the injection volume for the standard.
ug_{is} = the micrograms of analyte "i" in standard injection.

The concentration of analyte "i" in the reagent is calculated from the micrograms in the injection, the sample injection volume, the sample solution volume (usually 10 mL), and the sample weight. It is most useful to report concentrations in mg analyte per gram of reagent or wash water. The equation for that is given below.

$$\text{"i" (mg/g)} = (ug_{ix} * V)/(V_{jx} * W)$$

where V is the sample solution volume in mL (usually 10 mL)
V_{jx} is the sample injection volume and
W is the sample weight in grams.

	A	B	C	D	E	F	G	H	I	J
1	STANDARDS							SAMPLE #	R70078806	
2									170900WTG	
3	Standard	Number	3		2		0	dilution used	1	
4	inj. Vol.		10		10		10	inj.vol	10	
5	compound	Peak Height	µg/injection	Peak Height	µg/injection	Peak Height	µg/injection	Peak Height	µg/injection	
6	DMSO	459920	22.02	1816256	110.1	3353320	220.2	760326	41.528264	1
7	TMH	180721	10.54	425775	52.7	3339838	527	244243	21.468561	1
8	PEGa	99092	NA	117680	NA	333013	NA	100843		
9	PEGb	99431	NA	44212	NA	406573	NA	22412		
10	PEGc	33472	NA	117275	NA	282619	NA	94280		
11	PEGd	94297	NA	106762	NA	275791	NA	97530		
12	PEG SUM	326292	11.25	385929	56.25	1297996	562.5	315065	10.862912	0
13										
14								g used	1.4	
15								mL prep vol	10	
16										
17								compound	samp mg/g	
18								DMSO	29.663046	
19								TMH	15.334686	
20		Approximate	detection limits; PEG: 10		mg/g, TMH: 1		mg/g, DMSO: 1 mg/g.	PEG	7.7592228	

D-83

	W	X	Y	Z	AA	AB	AC	AD	AE	AF	AG	AH
1	SAMPLE #	R70078804		SAMPLE #	R70078804		SAMPLE #	R70078804		SAMPLE #		
2		250840RRG			250938WRG			220925RRG				
3	dilution used	1		dilution used	1		dilution used	1		dilution used	1	
4	inj.vol	10		inj.vol	10		inj.vol	10		inj.vol	10	
5	Peak Height	µg/injection		Peak Height	µg/injection		Peak Height	µg/injection		Peak Height	µg/injection	
6	2901421	187.83044	1	431763	20.671902	0	2642954	169.31643	1		0	0
7	763251	107.62842	1	168876	9.8491766	0	699422	97.239453	1		0	0
8	145209			95158			147107					
9	65965			95078			73777					
10	142965			92012			146896					
11	126095			95780			125920					
12	480234	108.59474	1	378028	50.288181	1	493700	116.06915	1	0	0	0
13												
14	g used	1.2		g used	1.3		g used	1		g used	2	
15	mL prep vol	10		mL prep vol	10		mL prep vol	10		mL prep vol	10	
16												
17	compound	samp mg/g		compound	samp mg/g		compound	samp mg/g		compound	samp mg/g	
18	DMSO	156.52537		DMSO	15.901463		DMSO	169.31643		DMSO	0	
19	TMH	89.690347		TMH	7.5762897		TMH	97.239453		TMH	0	
20	PEG	90.495613		PEG	38.683216		PEG	116.06915		PEG	0	

D-85

	N	O	P	Q	R	S	T	U	V	W	X	Y
1	SAMPLE #	R70078807		SAMPLE #	R70078807		SAMPLE #			SAMPLE #		
2	(spiked)	191105SEM		(spiked)	191105SEM							
3	dilution used	1		dilution used	1		dilution used	1		dilution used	1	
4	inj.vol	10		inj.vol	10		inj.vol	10		inj.vol	10	
5	Peak Height	µg/injection		Peak Height	µg/injection		Peak Height	µg/injection		Peak Height	µg/injection	
6	1876957	120.80471	1	1830152	116.95365	1		0	0		0	0
7	420778	54.590005	1	416048	53.990466	1		0	0		0	0
8	34027			64639								
9	47602			73364								
10	45012			66418								
11	33211			34646								
12	159852	5.2390643	0	239067	7.8352937	0	0	0	0	0	0	0
13												
14	g used	4		g used	4		g used	2		g used	2	
15	mL prep vol	5		mL prep vol	5		mL prep vol	10		mL prep vol	10	
16				after 2nd blow dow								
17	compound	samp mg/g		compound	samp mg/g		compound	samp mg/g		compound	samp mg/g	
18	DMSO	15.100589		DMSO	14.619207		DMSO	0		DMSO	0	
19	TMH	6.8237506		TMH	6.7488083		TMH	0		TMH	0	
20	PEG	0.654883		PEG	0.9794117		PEG	0		PEG	0	

See NBRG07/21
for final results

D-87

	N	O	P	Q	R	S	T	U	V	W	X	Y	Z	AA	AB
1	SAMPLE #	R70078807		SAMPLE #	R70078804		SAMPLE #	R70078804		SAMPLE #	R70078804		SAMPLE #	R70078804	
2	(spiked)	191105SEM			220959SRG			221050SRG			221120SRG			250925SRG	
3	dilution used	1		dilution used	1		dilution used	1		dilution used	1		dilution used	1	
4	inj.vol	10		inj.vol	10		inj.vol	10		inj.vol	10		inj.vol	10	
5	Peak Height	µg/injection		Peak Height	µg/injection		Peak Height	µg/injection		Peak Height	µg/injection		Peak Height	µg/injection	
6	1772037	116.21535	1	1475974	94.567405	1	1176808	73.810235	1	574500	32.020028	1	2203977	152.80223	1
7	419954	55.761059	1	329573	39.776076	1	244881	23.579434	1	209637	16.839311	1	461535	61.343109	1
8	134863			110065			108566			105053			137449		
9	141009			117126			110257			110029			141708		
10	133689			115392			108620			115405			133229		
11	58765			31274			54098			21647			43131		
12	468326	85.834003	1	373857	10.57147	0	381541	10.788749	0	352134	9.9572141	0	455517	79.21748	1
13															
14	g used	4		g used	2.6		g used	2.9		g used	3.6		g used	2.5	
15	mL prep vol	5		mL prep vol	5		mL prep vol	5		mL prep vol	5		mL prep vol	5	
16															
17	compound	samp mg/g		compound	samp mg/g		compound	samp mg/g		compound	samp mg/g		compound	samp mg/g	
18	DMSO	14.526918		DMSO	18.186039		DMSO	12.725903		DMSO	4.4472262		DMSO	30.560445	
19	TMH	6.9701324		TMH	7.6492455		TMH	4.0654196		TMH	2.3387932		TMH	12.268622	
20	PEG	10.72925		PEG	2.0329751		PEG	1.8601292		PEG	1.3829464		PEG	15.843496	

D-89

Appendix E.

Copies of Notebook Pages

Notebook Used	Page
Lab 2	E-1
NB Harbor 1	E-70
Lab 3	E-161

R7007 Notebook "LAB 2"

New Bedford Harbor

02/17/88 Testing 0.5 hp mixer motor/1 gal reactor flask combo:

1030 Set-up motor in home-fab bracket, connect all chucks for flexible shaft, connect motor to Variac Controller.

1045 Began agitating 1 gal sand/1:1:2 mix c̄ Variac set @ 22%, hung-u on bottom, increased Variac to 28%. Something rubbing in motor shroud. Will agitate x 1 hr. New Bedford soil arrived.

1105 Agitator stopped. Shaft freed, Variac turned up to 32%. Motor hot to touch. Small fan placed in hood blowing on motor.

1115 Speed varying s̄ apparent external cause.

Opened NB soil container, samples packed in 1 gal & 1L glass containers c̄ plastic screwtop lids. Glass jars are wrapped in bubble packing & vermiculite. All containers intact & good condition, labeled as to date of collection, time of collection & high or low level contamination. One low level jar label slightly smudged, but still legible. Rec'd: 1 High Level 1 ea 1 gal jar, 2 ea 1L jar; Low Level 2 ea 1 gal jars, 2 ea 1L jars.

1130 Speed of motor varying considerably, Variac set @ 40%, motor still ho to touch, but doesn't appear to be hotter than 15 min earlier.

1140 Note on soil samples: All samples in clear glass jars. Soil jet black, c̄ free liquid evident on tops.

1145 Moved sm. fan up to blow directly into cooling shroud, RPMs increased suddenly, to violent mixing, splattering in reactor, Variac ↓ 30%

1325 START OIL BATH HEATER OIL BATH 23.0°C OPEN

1341 TARE WT FOR BROWN PLASTIC PAN 387.2g

1405 OIL BATH 63.4°C CLOSE HOOD

R7007

/17/88 New Bedford Soil

1520 Begin seiving + homogenizing "High Level" NB soil. Seive thru a ¼ mesh ~~galvanized~~ SPZ galvanized screen into a plastic dish pan, beginning, tare wt: 427.4g

1525 Lg. amt free liquid on top of 1L sample jar "High Level" soil. Decanted to a 400ml beaker

Tare wt. beaker: 152.7g
BEAKER + DECAN 185.5g
32.8g

1525 OIL BATH TEMP 121.8°C

1550 TARE WT AL. FOIL. 5.2g
FOIL + MAT NOT SIEVED 230.4g ¼"
MATERIAL NOT SIEVED ¼" 225.2g

1600 Wt, plastic bucket + sieved soil: 14.2 lbs = 6446.8g
WT PLASTIC = 427.4g
6019.4g

1605 OIL BATH 142.6°C

1610 TAKE SP # R7007880217 1610SJR HIGHLEVEL SOIL

TARE WT 8 ml VIAL 9.9g R7007880217 1610SJRA
VIAL + SOIL WT 12.9g (QUICKIE) 1:1:2
SOIL WT 3.0g

TARE WT 8 ml VIAL 9.8g R7007880217 1610SJRB
VIAL + SOIL WT 13.9g 36 HR 1:1:2
SOIL WT 4.1g

1600 MIX HIGH LEVEL MATERIAL WITH TROWEL FOR 10 MIN
SOIL SMELLS ~~WORTH~~ WORSE WITH MORE STIRRING

2/18/88 R7007

0645 TURN ON OIL BATH HEATER 25.5°C

0725 OIL BATH TEMP 64.5°C

0745 OIL BATH TEMP 83.5°C STOP OIL LEAK

1410 Replumbed Oil Bath heater for remote use, w/ ½ Cu tubing, in-li gate valve/faucet for flow adjustment.

1530 Replumbing complete, run @ 33°C setting to check for leaks & fittings etc. ~~conc~~ considerable "fiddling" needed to regulate flow.

1535 Temp setting ↑ to 173°C to test plumbing under heating conditio

1600 Occasional adjustments needed to maintain proper level in small bath. Temp ~~87°C~~ 67°C

1630 Still "fiddling" c̄ valves to maintain level. Opened outlet wide open, will control balance c̄ inlet valve temp: 98°C. Thermometer placed to monitor temp drop in lg. pan.

700 Temp: ~~10~~ 120° sm. pan 118° lg pan

730 Temp 143 sm. pan 142 lg pan heater shut-off.

R7007

02/19/88 New Bedford Harbor

0845 (#1) → ~~Tare wt. rubber ring:~~ JPR ~~Ring + cond. flask wt:~~ JPR
Condensate flask wt: 115.3g

(#2) → ~~Tare wt. rubber ring:~~ ~~Ring + cond~~ Condensate flask wt: 118.1g

0850 Dry soil wts. taken for RS989 vermiculite reactions, refer to write-ups for soil wts, pgs 64-70 this notebook. Dry wts entered in blue ink.

1015 Weighing Low Level New Bedford soil into the reactors:

(#1) →
Tare wt. reactor + ring: 702.6 (beam balance)
Soil, reactor + ring: 1002.6 " "
Wet soil wt: 300.0 " "

(#2) →
Tare wt. reactor + ring: 730.8g (beam balance)
Soil, reactor + ring: 1030.8g " "
Wet soil wt: 300.0g " "

Note: beam balance used so contaminated soil could be weighed in hood. 300g aliquots of Low level soil used because % moisture test indicate that soil moisture is > 62%, hence will need 300g wet to be left ε 100g dry soil p̄ sampling + water losses.

1355 Weighing reagents for reactions 02/22/88:

1:1:2 (PEG:TMH:DMSO) 1st batch in 400ml beaker →
PEG: 99.9g
TMH: 100.6g
DMSO: 200.2g
400.7g total 1:1:2

2nd batch 1:1:2:
PEG: 100.1g
TMH: 100.1g
DMSO 200.0g
400.2g total 1:1:2

2/22/88 RD007

0535	TARE BEAKER BEAKER + 1:1:2 1:1:2	103.2 g 303.2 g 200.0 g	PEG: TMH: DMSO
0540	TARE BEAKER BEAKE + 1:1:2 1:1:2	111.7 g 311.7 g 200.0 g	PEG: TMH: SULF
0545	TARE BEAKER BEAKER + KOH 45% KOH	111.3 g 211.3 g 100.0 g	FOR #1 45% KOH
0548	TARE BEAKER BEAKER + 45% KOH 45% KOH	70.7 g 170.7 g 100.0 g	FOR #2 45% KOH

0600 START REACTIONS

OIL BATH TEMP 22.4 °C
REACTOR #1 33 °C
REACTOR #2 31 °C

0620 some small adjustment problems c oil levels in two pans, easily corrected by adjusting oil level in small pan.

0630 Temps: Oil: 57.8°C
Reactor #1: ~~39°C~~ 41°C
Reactor #2: 38°C

0700 Temps: Oil: 99.5°C
Reactor #1: 79°C

R7007

02/22/88 New Bedford

0800 Wt p̄ water wash X3: 12.8g wet soil: 3.0g

Tare wt water wash vial: 19.4g
Water washes + vial wt: 36.5g
Water washes : 17.1

0802 Collected sample # R70078802220802S~~RG~~ JR, Reactor #2 Extracted

Tare wt. vial; 9.6g
Slurry + vial wt: 15.9g
Slurry wt: 6.3g
Wt. p̄ water wash X3: 14.1g Wet soil: 5.5g

Tare wt. water wash vial: 19.5g
Water washes + vial wt: ~~36.5g~~ JR 33.5g
Water washes: ~~17.0g~~ JR 14.0g

0805 Sm. leak noted from condensate collector, Reactor #1, adjusted + leak stopped.

Extracting + water washing # R70078802220800S~~RG~~ JR and R70078802220802S~~RG~~ JR

0900 TEMPS OIL BATH ~~16.5°C~~ 166.5°C RG
REACTOR #1 122°C
REACTOR #2 120°C

all visible Gel Still Blue
Weight of SFLL Rxn Trap
R70078802191602DEM 24.6
DMSO Rxn Trap
R70078802191600DEM 25.6g

DREW SAMPLE # R70078802220900S~~RG~~ JR REACTOR #1

TARE WT VIAL 9.7g
VIAL + SLURRY WT 17.1g
SLURRY WT 7.4g
WT AFTER 3 WATER WASHES 13.7g wet soil: 4.0g

TARE WT WASH WATER VIAL 19.6g
VIAL + ~~WATE~~ WASH WATER 40.7g
WT WASH WATER 21.1g

R7007

02/22/88

1002 Tare wt. water wash vial: 19.7g
water washes + vial wt: 36.1g
Water washes: 16.4g

1100 TEMPS OIL BATH: 172.6°C
REACTOR #1: 157°C
REACTOR # 2: 146°C

DREW SAMPLE # R7007880222 1100 S ~~R6~~ JR JPR REACTOR #1

TARE WT VIAL 9.8
VIAL + SLURRY WT: 14.4g
SLURRY WT 4.6g

WT AFTER 3 WATER WASHES 12.1g WET SOIL WT 2.3g

TARE WT WASH WATER VIAL 19.6g
VIAL + 3 WATER WASHES 37.5g
WATER WASH WT 17.9g

1102 DREW SAMPLE # R7007880222 1102 S ~~R6~~ JR JPR Extracted

TARE WT VIAL 9.6g
VIAL SLURRY WT 16.7g
SLURRY WT 7.1g

WT AFTER 3 WATER WASHES 11.5g WET SOIL 1.9g

TARE WT WASH WATER VIAL 19.5g
VIAL + 3 WATER WASHES 39.6g
WATER WASH WT 19.9g

R7007

02/22/88

1230 Cont. spiking c̄ DCB, followed by 3ml of hexane. The vial is agitated thorou on the vortex mixer and spun 1-2 min in a centrifuge. The hexane la is drawn off + collected in a 10ml volumetric flask. 2 more aliquots of hexane are run identically to the above steps. The 10ml flask is then brought up to volume c̄ pest. grd. hexane. A small amt. 1-2ml is pour into a 4ml vial c̄ 1ml of conc. H_2SO_4 and mixed thoroughly to aci wash the sample. The resulting washed extract is pipetted to an ALS vial for dilution + injection.

1300 Temps Oil:
Reactor #1:
Reactor #2:

Drew sample # R7007880222 1300 SJR
Tare wt. vial: 9.8g
vial + slurry: 12.8g
Wt. p̄ water wash X3: 3.0 wet soil wt: 2.6g
12.4g

Tare wt. water wash vial: 19.8g
vial + water washes: 35.7g
Water washes wt: 15.9g

1302 Drew sample # R7007880222 1302 SJR Extracted
Tare wt. vial: 9.6g
Slurry + vial: 14.0g
Slurry: 4.4g
Wt. p̄ water wash X3: 13.3g wet soil: 3.7g

Tare wt. water wash vial: 19.7g
vial + water washes: 33.3g
Water washes wt: 13.6g

1400 TEMPS OIL BATH 162.5°C
REACTOR #1 158°C
REACTOR #2 149°C

02/22/88

1500 Cont. Tare wt. wash water vial: 19.5g Extracted
Vial + water washes : 35.8g
Water washes:

1502 Drew sample # R700788022215025JR
Tare wt. vial: 9.6g
Vial + Slurry wt: 13.7g
Slurry wt: 4.1g
Wt. of water wash X 3 : 12.4g Wet soil wt: 2.8

Tare wt water wash vial: 19.7g
Vial + water washes : 37.6g
Water washes :

Note: Water washes got to mixed-up on 1500 - 1502

1600 TEMPS OIL BATH 164.5
REACTOR #1 161
REACTOR #2 149

DREW SAMPLE R700788022216005TG

TARE WT VIAL 9.8g
VIAL + SLURRY WT 15.1
SLURRY WT 5.3gr

WT AFTER 3 WATER WASHES 12.1gr WET SOIL WT 2.3g

TARE WT WASH WATER VIAL 19.4g
VIAL + WASH WATER 37.7g
WT WASH WATER 18.3gr

R7007

02/23/88

0905 Weighing water to replace distillate to Reactor #1: 142.7g
Water added to reactor, mixed in, water/soil slurry dumped in + thoroughly mixed.

0912 Slurry dumped into filter body for Reagent filtering. ~~Wash~~ SPR Distillate replacement to sit x 10 min a pressurizing

0922 Opened tube clamp @ reactor bottom, very thin stream, to slow drip.

0923 Begin pressurizing @ 40psi, slow drip. Pressure ↑ 100 psi, slow drip.

0925 Weigh Wash #1, DMSO Rxn: 200.3g

0935 Only sm. amt. of filtrate in bottom of collection jar, no apparent flow now

0955 Pressure filtrate wt.: 200.5g jar + filtrate
Less Tare wt. 250 ml jar: 177.6g
22.9g filtrate

1000 Decanting remainder of distillate to Reagent Filtering collection jar

Tare wt 250ml jar: 177.6g
Filtrate + decant + jar: 426.1g
Filtrate + decant wt: 248.5g
Less filtrate wt: 22.9g
Decant liq. wt: 225.6

1125 SPR Wash #1, DMSO rxn poured into filter body, stirred thoroughly + allow to sit x 10min

1126 Weighing Wash #2, DMSO Rxn: 200.3g

1135 Begin pressurizing Wash #1, DMSO Rxn @ 100psi. Sm. bolus of fines came out when stopcock opened, no obvious flow noted. Will leave x 10min.

1145 No flow c Wash #1 10min @ 100psi. Pressure ~~relive~~ SPR relieved. Will decant wash. Total 250ml jar + filtrate: 179.6g

2/23/85 R7007

TARE WT JAR 177.0 g
JAR + DECANT WASH #1 508.4
DECANT WASH #1 includes all sediment

I tried to scrape as much as possible from the reactor walls then allowed the solids to settle for 30 min. Decantation was done by removing liquid from the surface using a 10 ml wide tip pipette & pipette master. Decantation was done slowly to allow more settling.
Despite of careful decantation and prolonged settling time (up to 1 hour) I observed no liquid/solid interface. (It doesn't settle good.)
The liquid at the bottom was much thicker than the liquid at the top, but still liquid.
Finally I scraped as much as possible from the reactor and poured it into the wash jar. Decant

Ring	131.0		
Dirty Reactor + Ring	732.8		732.8
Initial Reactor + Ring	~~730.8~~	Final Reactor + Ring	724.8
Soil Left in Reactor	~~2.0~~		8.0

Final Clean Reactor weight
Ring 131.0
+ Reactor #1 (Jan 80) 698.6
#2 (SFLN) 724.8

2/23/88 R7007

1455 TARE WT RING 131.0g
RING + REACTOR #1 702.5g
REACTOR #1 571.5g

1457 TARE WT RING 131.0
RING + REACTOR #2 724.5
REACTOR #2 593.5g

1507 TARE WT RING + REACTOR #1 701.4g TRIPPLE BEAM
RING, REACTOR, + SOIL 1001.4g LOW LEVEL
SOIL 300.0g

1511 TARE WT RING + REACTOR #2 723.4g TRIPLE BEAM
RING, REACTOR + SOIL 1023.4g LOW LEVEL
SOIL WT 300.0g

1521 Tare wt. "cold trap" # 1: 79.9g
Tare wt "cold trap" # 2: 80.9g

1525 Tare wt. cond. flask # 1: 105.8g
Tare wt. cond. flask # 2: 120.3g

Drying tubes #1 R7007 R7007880223163 0DEM 23.4g
#2 R7007880223163 2 DEM 22.7g

1720 Reagents for Reactions on 2/24/87

Reaction #1 Actual

1:1:2 TMH:PEG:DMSO 200.2g -1.3g
KOH 100.0g -1.0g
Total Reagent 300.2g 29

Reaction #2

1:1:2 TMH: PEG: DMSO 200.0g -1.7g
KOH 100.3g -1.5g 29

2/24/88 R7007

0700 TEMPS OIL BATH 103.7°C
REACTOR #1 85°C
REACTOR #2 85°C

DREW SAMPLE # R7007880224 0700 ST6 Extracted

TARE WT VIAL 9.6 g
VIAL + SLURRY WT 16.2 g
SLURRY WT 6.6 g

WT AFTER 3 WATER WASHES 12.6 g WET SOIL WT 3.0

TARE WT WATER WASH VIAL ~~19.6 g~~ RS ~~19.6 g~~ RS 19.6 g
VIAL + WATER WASHES ~~17.8 g~~ RS ~~33.9 g~~ RS 35.8 g
WATER WASH WT ~~8.2 g~~ RS 16.2 g

0702 DREW SAMPLE # R7007880224 0702 ST6

TARE WT VIAL 9.7 g
VIAL + SLURRY 17.8 g
SLURRY WT 8.1 g

WT AFTER 3 WATER WASHES 13.1 g WET SOIL WT 3.4 g

TARE WT WATER WASH VIAL ~~17.5 g~~ RS 19.5 g
VIAL + WATER WASHES ~~35.8 g~~ RS 33.9 g
WATER WASH WT 14.4 g

0730 TEMPS OIL BATH 133.0°C
REACTOR #1 111°C
REACTOR #2 110°C

2/24/98 R7007

0835 TARE WT BEAKER 49.0g
BEAKER & VERMICULITE 52.0g
VERMICULITE 3.0g

ADD TO REACTOR #2 AT 150°C

0900 Oil Bath Temps ~~168.3°C~~
Oil bath 168.3°C
Reactor #1 125°C
Reactor #2 119°C

Drew Sample #R7007880224090 0STG Extracted

Tare wt vial 9.7
vial + slurry 17.9g
wt slurry 8.2g

Vial wt after 3 washes 13.4g wt of wet solid 3.7g

wt of wash vial 19.8g
vial + washes 36.1g
wt of washes 16.3g

0902 Drew Sample #R7007880224090 2STG

Tare wt vial 9.5g
vial + slurry 18.0g
wt slurry 8.5g

Vial wt after 3 washes 13.9g wt of wet solid 4.4g

wt of wash vial 19.6g
vial + washes 33.3
wt of washes 14.7g

0930 Oil Bath Temps
Oil bath 175.3°C
Reactor #1 143°C
Reactor #2 129°C

2/24/88 R7007

1100 TEMPS OIL BATH : 163.8°C
REACTOR #1 152°C
REACTOR #2 152°C

DREW SAMPLE # R7007880224 1100 SJR

TARE WT VIAL 9.6g Extracted
VIAL + SLURRY WT Forgot slurry wt.
SLURRY WT

WT AFTER 3 WATER WASHES 13.7g WET SOIL WT 4.1g

TARE WT WATER WASH VIAL 19.5g
VIAL + WASH WATER 39.7g
WASH WATER WT 19.2g

1102 DREW SAMPLE # R7007880224 1102 SJR

TARE WT VIAL 9.6g
VIAL + SLURRY WT Forgot slurry wt
SLURRY WT

WT AFTER 3 WATER WASHES 13.2 WET SOIL WT: 3.

TARE WT WASH WATER VIAL 19.6g
VIAL + WATER WASHES 38.7g
WT WATER WASHES 19.1g

02/24/88

1302 Drew sample # R7007880224 1302SJR
Tare wt. vial: 9.6g
Slurry + vial wt: 16.6g
Slurry wt: 7.0g
Wet p water wash x3: 13.8g Wet soil wt: 4.2g

Tare wt. water wash vial: 19.4g
Vial + water washes: 38.4g
Water washes wt: 19.0g

1400 Temps
oil: 166°C
Reactor #1: 160°C
Reactor #2: 152°C

Drew sample # R7007880224 1400SJR

TARE WT VIAL 9.8g
VIAL + SLURRY WT 17.2g
SLURRY WT 7.4g

WT AFTER 3 WATER WASHES 12.3 WET SOIL WT 2.5
Note: Vial broke in centrifuge, most of soil salvaged.

TARE WT WASH WATER VIAL 19.5g
VIAL + WATER WASHES 34.1g
WT WATER WASHES 14.6g
Note: 3rd wash not recovered.

1402 DREW SAMPLE # R7007880224 1402SJR

TARE WT VIAL 9.7g
VIAL + SLURRY WT 14.3g
SLURRY WT 4.6g

WT AFTER 3 WATER WASHES: 12.2 WET SOIL WT: 2.5g

WT WASH WATER VIAL 19.8g
VIAL + WASH WATER WT 39.3g
WASH WATER WT 19.5g

R7007

02/24/88 New Bedford - vermiculite

1600 Continued
Tare wt wash water vial: 19.6g
vial + water washes: 40.1g
Water washes wt: 20.5g

1602 Drew sample # R7007880224160 2SJR
Tare wt. 8ml vial: 9.8g
Vial + slurry wt: 14.6g
Slurry wt: 4.8g
Weight p̄ water wash X 3: 10.7g Wet soil wt: 0.9g

Tare wt. water wash vial: 19.6g
Vial + water washes: 40.4g
Water washes wt: 20.8g

1610 Sampling now more difficult, often unable to eject solids ~~for~~ SPR from the pipette.

1700 Temps:
Oil: 161.7°C
Reactor # 1: 156°C
Reactor # 2: 151°C

Drew Sample # R7007880224170 0SJR Extracted
Tare wt. 8ml vial: 9.6g
Slurry + vial wt: 17.8g
Slurry wt: 8.2g
~~Wet~~ SPR Wt. p̄ water wash X 3: 13.2g Wet soil wt: 2.6

Tare wt. water wash vial: 19.4g
Vial + water washes wt: 41.3g
Water washes wt: 21.9g

~~1608~~ 1710 Drew Sample # R7007880224 1702SJR Extracted
Tare wt. 8ml vial: 9.7g
Vial + slurry wt: 17.2g
Slurry wt: 7.5g
~~Wet~~ SPR Wt p̄ water wash X 3: 13.6g Wetsoil wt: 2.6g

Tare wt. water wash vial: 19.7g
Vial + water washes wt: 39.6g

R7007

02/25/88 New Bedford - vermiculite

0730 Weighing reaction components from reactions on 02/24/88

Reactor # 1 (vermic. @ 120°C) : 871.6g
Less foil cover wt : - 2.8g
wt. reactor + contents : 868.8g

Reactor # 2 (vermic. @ 150°C) : 921.8g
Less ~~foil~~ foil cover wt: - 2.6g
Wt. reactor + contents : 919.2g

Tare wt #1 condensate flask : 105.8g
Foil, Flask + condensate wt : 317.8g
Foil cover + condensate : 212.0g
Less foil cover wt : -0.4g
Condensate wt : 211.6g

Tare wt. # 2 condensate flask: 120.3g
Foil cover, flask + condensate wt: 313.1g
Foil cover + condensate wt: 192.8g
Less foil cover wt : - 0.4g
Condensate wt : 192.4g

#1 Cold trap tare wt: 79.9g
Trap + distillate : 79.9g
Distillate wt: 0.0g

#2 Cold trap tare wt : 80.9g
Trap + distillate : 80.9g
Distillate wt : ~~80.9g~~ 0.0g

Tare #1 Silica gel tube, drying tube: 23.4g
Final wt drying tube: 23.4g
Distillate wt : 0.0g

Tare wt #2 Silica gel drying tube: 22.7g
Final wt. drying tube: 22.8g
Distillate wt: 0.1g

R7007

02/25/88 New Bedford, vermiculite filtering

1040 Experimenting c̄ "seawater" flocculation/settling + treated NB soil

Tare wt. 40ml beaker: 30.3g

Will mix approx. 0.2g NaCl to simulate estuary water

Begin wt. DI water: 10.0g
DI water + NaCl : 10.24g

1045 Saline water added to 8ml vial c̄ 1.2g slurry from Reactor #1

Tare wt. vial + slurry: 10.7g
Vial, slurry + saline wt: 12.7g
Saline wt : 2.0g

1047 DI water added to 8ml vial c̄ 1.1g slurry from Reactor #1

Tare wt. vial + slurry : 10.7g
Vial + slurry + DI H_2O : 12.8g
DI H_2O wt : 2.1g

1050 Both vials vortex mixed x 30sec. then allowed to settle x 10min.
Will try same settling experiment c̄ adding 1N HCl in DI water

Tare wt. 8ml vial: 9.6g
Vial + slurry : 10.9g
Slurry wt: 1.5g

TARE WT VIAL + SLURRY 10.9g
VIAL, SLURRY, 0.2N HCl 12.9g
0.2N HCl 2.0g

1100 HCl/Slurry vial checked for pH: 11, c̄ vortex mixed x 30 sec.
Will add 1.0g, mix + recheck pH: 10, will allow to settle x 10 min

Better liquid/solid interface noted for DI water sample (1047, above) than simulated "seawater" sample (1045 above). Both samples centrifuged to check for suspended solids. DI water sample still shows better interface. Saline wash water app not helpful.

R7007

02/25/88 New Bedford settling tests

1330 Tare wt 8ml vial for "household ammonia": 9.7g
Slurry + vial wt: 10.6g
Slurry wt : 0.9g

VIAL + SLURRY WT 10.6g
VIAL, SLURRY, + DI WATER 12.7g
DI WATER 2.1g

VIAL, SLURRY, DI WATER 12.7g
VIAL, SLURRY, DI WATER + AMMONIA 12.9g
AMMONIA 0.2g

START SETTELING 1410 SOME VISIBLE SETTELING

1 min CENTRIFUGE DISTINCT GRAY + VERY DARK LAYE.
~~STILL FINES IN H_2O~~ H_2O STILL TURB.

Tare wt 8ml vial for "Clorox" bleach: 9.7g
vial + Slurry wt: 11.3g
Slurry wt: 1.6g

VIAL + SLURRY WT 11.3g
VIAL, SLURRY, + DI WATER 13.3g
DI WATER 2.0g

VIAL, SLURRY, DI WATER 13.3g
VIAL, SLURRY, DI WATER, + CHLOROX 13.4g
CHLOROX 0.1g

START SETTELING 1358 VERY LITTLE SETTELING (SAND)

1 min CENTRIFUGE DISTINCT GRAY LAYER + VERY DARK LAYER
~~STILL FINES IN~~ H_2O STILL TURB.

R7007

02/25/89 New Bedford Settling tests

1335 Tare wt 8ml vial for ~~Fullers Earth~~ BAKING SODA: 9.6g
Slurry + vial wt: 11.5g
Slurry wt: 1.9g

VIAL & SLURRY WT 11.5g
VIAL, SLURRY & DI WATER 13.5g
DI WATER 2.0g

VIAL, SLURRY & DI WATER 13.3g
VIAL, SLURRY, DI WATER & BAKING SODA 13.6g
BAKING SODA 0.1g

START SETTELING 1523 NO VISIBLE EFFECT

1 MIN CENTRIFUGE SPIN SOME SOLIDS OUT
NOT GOOD INTERFACE

Tare wt 8ml vial for vermiculite: 9.5g
Vial & Slurry: 10.8g
Slurry wt. 1.3g

VIAL & SLURRY WT 10.8g
VIAL, SLURRY, & DI WATER 12.8g
DI WATER 2.0g

VIAL, SLURRY, & DI WATER 12.8g
VIAL, SLURRY, DI WATER & VER 12.9g
VERMICULITE 0.1g

START SETTELING 1415 Some settling noted (SAND), vermiculite floating on water layer, no flocculation

1 MIN CENTRIFUGE SOIL SPUN OUT NO DISTINCT LAYERS
H_2O STILL TURBID

R7007 2/22/88

1720 Extracted sample R700 78 8022216005TG

R7007

02/25/88 New Bedford Settling tests

1342 Tare wt 8ml vial for ferrous sulfate: 9.6g
Slurry + vial wt: 10.6g
Slurry wt: 1.0g

VIAL + SLURRY WT 10.6g
VIAL, SLURRY, + DI WATER 12.6g
DI WATER 2.0g

VIAL, SLURRY, DI WATER 12.6g
VIAL, SLURRY, DI WATER + FERROUS SULF 12.7g
FERROUS SULFATE 0.1g

START SETTELING 1422 NO SETTELING COATS SIDES

ADD HCL BRING PH TO 3 FORMED A GEL
START SETTELING 1437

1 MIN CENTRIFUGE SPUN SOIL OUT GET AMBER LIQUOR ON TOP

TARE WT 8ml VIAL FOR FERROUS AMMONIUM SULFATE 9.7g
VIAL + SLURRY WT 11.3g
SLURRY WT

VIAL + SLURRY 11.3g
VIAL, SLURRY, + DI WATER 13.3g
DI WATER 2.0g

VIAL, SLURRY, DI WATER 13.3g
VIAL, SLURRY, DI WATER FERR AMM SULF 13.4g
FERROUS AMMONIUM SULF 0.1g

START SETTELING: 1428 NO SETTELING COATS SIDES

ADD HCL BRING PH TO

2/~~24~~25/88 RJOOJ

1545 TARE WT 8 ml VIAL FOR HCl 9.4s ~~9.6s~~
VIAL + SLURRY 10.6s
SLURRY WT ~~2.2s~~ ~~2.2s~~

VIAL + SLURRY WT 10.6s
VIAL, SLURRY, + DI WATER 12.7s
DI WATER 2.1s

VIAL, SLURRY, DI WATER, ~~HCl~~ 12.7s
VIAL, SLURRY, DI WATER + HCl 12.8
8N HCl 0.1s

START SETTELING 1558 PH = 4
1 MIN LEFT SOIL SPUN OUT CLOUDY BUT TRASPARENT LIQUOR

TARE WT 8 ml VIAL FOR FERROUS SULFATE 9.6s
VIAL + SLURRY 11.1s
SLURRY WT

VIAL + SLURRY WT 11.1s
VIAL SLURRY + DI WATER 13.2s
DI WATER ~~2.0~~ 2.1

VIAL, SLURRY, DI WATER 13.4s
VIAL SLURRY, DI WATER FERROUS SULF 13.3s
FERROUS SULFATE 0.1s

START SETTELING 1554

1 MIN LEFT. SOIL SPUN OUT CLOUDY BUT TRANSPARENT LIQUOR

15 MIN SETTLING TIME

2/29/88 R R7007

0707 TARE WT VIAL FOR HCl 9.5 s PH 10
VIAL & SLURRY 10.9 s
SLURRY 1.4 s

VIAL & SLURRY 10.9 s ~~11.4 s~~
VIAL, SLURRY & DI WATER 12.9 s
DI WATER 2.0 s

VIAL, SLURRY, DI WATER 12.9 s 11.
VIAL SLURRY DI WATER & 8N HCl ___ s
8N HCl s

START SETTELING 0728 - Still cloudy @ 0743

1 MIN CENTRIFUGE - layer of fines + sand @ bottom, liquor still murky

START SETTLING 0802

ADD 2.8 s 1% $FESO_4$ 12.9 s → 15.7 s = 2.8 s

TARE WT VIAL FOR 1% $FESO_4$ 9.6 s NO PH ADJUSTMENT
VIAL & SLURRY 10.8 s ADD DI WATER
SLURRY 1.2 s

VIAL & SLURRY 10.8 s
VIAL, SLURRY, & DI WATER 11.8 s
DI WATER 1.0 s

VIAL, SLURRY, & DI WATER 11.8 s
VIAL, SLURRY, DI WATER & 1% $FESO_4$ 13.0 s
1% $FESO_4$ 1.2 s

START SETTELING 0728 - Still cloudy @ 0743, sand in bottom

1 MI FUGE - layer of fines + sand @ bottom, liquor still dark

START SETTLING 0802

2/~~25~~ 26/88 RJOO7

FROM PAGE 133 THIS BOOK

HCl PH 10 ADD 2% $FeSO_4$

NO SETTLING FOAMING ON TOP

1 MIN CENTRIFUGE LIQUOR MURKY
SOLIDS SETTLE

5 MIN CENTRIFUGE NO CHANGE

1% $FeSO_4$ ADD ANOTHER 1% $FeSO_4$

NO SETTLING - FOAMING ON TOP

1 MIN CENTRIFUGE LIQUOR MURKY
SOLIDS SETTLE

5 MIN CENTRIFUGE NO CHANGE

2/16/88 RJOO7

TARE WT BEAKER 114.1g
BEAKER + 1% $FeSO_4$ ~~162.1g~~
1% $FeSO_4$ 48.0g

BEAKER + 1% $FeSO_4$ 162.1g
BEAKER, 1% $FeSO_4$ + $FeSO_4$ 164.1g
$FeSO_4$ 2.0g

MAKES 5% $FeSO_4$ ~~LOOKS LIKE A GEL~~ F

2% $FeSO_4$ ~~IN~~ WITH 0% WATER

ADD 1.9g OF 5% $FeSO_4$ TO MAKE 10%
NO PH ADJUSTMENT

START SETTLING 0857 LOOKS LIKE A GEL FOAM

1 MIN CENTRIFUGE SOLIDS OUT
LIQUOR AMBER

1% $FeSO_4$ NO 0% WATER

ADD 2.2g OF 5% $FeSO_4$ TO MAKE 5% $FeSO_4$
NO PH ADJUSTMENT

START SETTLING 0857 LOOKS LIKE A GEL FOAMY

1 MIN CENTRIFUGE SOLIDS OUT
LIQUOR DARK + SOME SOLI

BRING PH TO 10 1 MIN CENT SOLIDS OUT (A LOT)
3 ORO HCl LIQUOR DARK BUT FEW SOL

2/26/88 RDOD

TARE WT VIAL FOR 9½% $FeSO_4$ 9.7g
VIAL + SLURRY WT 11.5g
SLURRY WT 1.8g

VIAL + SLURRY WT 11.8g
VIAL, SLURRY WT, + 5% $FeSO_4$ 14.5g
5% $FeSO_4$ 2.7g

CHECK PH = 9

1 MIN CENTRIFUGE ALL SOLIDS OUT
LIQUOR IS DARK AMBER

CHECK PH = 9

1030 Dumping slurry from aborted filtering attempt to clear 500ml jar & teflon-lined cap. Will neutralize c̄ HCl to pH 6-7 + settle over w/E. Added 20g DI water to flush as much solids out as possible.

Tare wt 250ml jar: 177.3g
Wt + dumping rinse: 178.4g

Tare wt 500ml clear jar: 233.8g
Jar, slurry + water rinse wt: 343.0g
Transf. slurry wt: 110.8g
Less rinse wt: 20.0g
Slurry wt: 90.8g

Initial pH transferred slurry: >13

1040 After adding 7.0g of 8N HCl slurry has ~~been~~ become thick + gelatinous. Will add another 50g DI water to create thinner slurry. pH > 12

Tare jar + slurry: 350.4g
Jar, slurry + DI H_2O: 400.4g
Added DI H_2O: 50.0g

JAR SLURRY + DI H_2O 400.4g
JAR SLURRY, DI H_2O, + 8N HCl 415.3g
pH = 5 8N HCl 14.9g 14.9g

R7007

02/29/99 WB

1358 Sample# R7007880217162 0SJR Beaker + soil wt: 62.7g
Begin wt. beaker + wet soil: 90.3g
Moisture wt: 27.6g
Less tare wt. beaker: 49.9g
Final dried soil wt: 12.8g
% moisture content based on 40.4g begin wet soil wt: 68.3%

R7007

03/02/88 NB, Metallic sample clean-up experiments

0715 Continuing c̄ Cu-wash clean-up trials, see extraction notes 0715 03/01/88

0800 Experimenting c̄ #R7007880222160OSTG, a sample not yet Cu-washed.

0930 Running #R7007880222160OSTG through a 2nd Cu-wash, using procedure described 0715, 03/01/88. See chromatograms for results

1000 Experimenting c̄ Mercury wash, using small beads of metallic mercury drawn off top of Stack testers manometer. Used same extraction procedure described above, but substituted M for Cu. After vortex mixing sample a cloudy grey, M is small clumps of slag in bottom of 4 ml vial.

3/7/88 NB, CLEAN UP EXPERIMENT

~~TAKE~~ USE SAMPLE R7007880222140 2SJR

0715 PUT IN EXCESS AMOUNT OF METALLIC COPPER UNTREATED. ADD ~2 ml OF SAMPLE AND VORTEX MIX FOR ~2 MIN. ADD H_2SO_4 & VORTEX MIX FOR ~2 MIN. THEN CENTRIFUGE FOR ~2 MIN. PUT IN 1.5 ml ALS VIAL. WORKED

0745 USE SAMPLE R7007880224170 2SJR & FOLLOW PROCEDURE AT 0715 WORKED.

0925 ~~Pre~~ Preparing soils for centrifuge/decant experiment @ offsite lab. Will split DMSO/Vermiculite @ 150°C reaction, from 02/24/88, and Sulfolane reaction, from 02/22/88 into two aliquots ea. + pour them into 700ml centrifuge jars. Sulfolane reaction will be transferred to centrifuge jars #1 + #2. Vermiculite @ 150° reaction will be transferred to centrifuge jars #3 + #4.

Tare wt. centrifuge jar #1 : 242.3g
Jar + contents wt : 403.0g
Contents wt : 260.7g

[illegible]	[illegible]	[illegible]	[illegible]	~~Vial + wet soil~~	~~Net soil~~	~~Vial Dry soil~~	~~Dry soil~~	~~Vial Tare~~			
				Wash vial tare	Vial + wash	Net wash	Vial + wet soil	Net wet soil	Vial + Dry soil	Net Dry soil	Final PPM

experiment with
Sampling table
3/15/88
[illegible]

3/8/88 R7007

R7007880222 0000 SJR

TARE WT VIAL	9.9g
VIAL & DRY SOIL	11.3g
DRY SOIL	1.4g

~~DIFF FROM~~ WET SOIL WT 2.8g

NB WM 3/22 and WMNB 3/07

R7007880222 1100 SJR

TARE WT VIAL	9.8g
VIAL & DRY SOIL	10.9g
DRY SOIL	1.1g

~~DIFF FROM~~ WET SOIL WT 2.3g

WMNB 3/01

R7007880222 1200 SJR

TARE WT VIAL	9.7g
VIAL & DRY SOIL	11.0g
DRY SOIL	1.3g

~~DIFF FROM~~ WET SOIL WT 2.6

NB WM 3/22 and WMNB 3/07

R7007880222 1300 SJR

TARE WT VIAL	9.8g
VIAL & DRY SOIL	10.9g
DRY SOIL	1.1g

~~DIFF FROM~~ WET SOIL WT 2.7g

WMNB 3/01

R7007880222 1400 SJR

TARE WT VIAL	9.7g
VIAL & DRY SOIL	10.2g
DRY SOIL	0.5g

WET SOIL WT 1.4g

NB WM 3/22 and WMNB 3/07

3/8/88 R7007

R7007880222 1002 SJR

TARE WT VIAL	9.6g	WMNB 3/01
VIAL + DRY SOIL	10.1g	a.d WMNB 3/07
DRY SOIL	0.5g	

~~DIFF FROM~~ WET SOIL WT 1.5g

R7007880222 1102 SJR

TARE WT VIAL	9.6g	
VIAL + DRY SOIL	10.5g	NB WM 3/22
DRY SOIL	0.9g	

~~DIFFT FROM~~ WET SOIL WT 1.9g

R7007880222 1202 SJR

TARE WT VIAL	9.5g	
VIAL + DRY SOIL	10.3g	WM NB 3/01
DRY SOIL	0.8g	a.d WM NB 3/07

~~DIFF FROM~~ WET SOIL WT 1.6g

R7007880222 01302 SJR

TARE WT VIAL	9.6g	
VIAL + DRY SOIL	11.7g	NB WM 3/22
DRY SOIL	2.1g	

~~DIFF FROM~~ WET SOIL WT 3.7g

R7007880222 1402 SJR

TARE WT VIAL	9.7g	
VIAL + DRY SOIL	11.2g	WM NB 3/01
DRY SOIL	1.5g	a.d WM NB 3/07

~~DIFF FROM~~ WET SOIL 2.5g

3/8/88 R7007

R7007880224 1100 SJR

TARE WT VIAL 9.6g
VIAL + DRY SOIL 11.7g
DRY SOIL 2.1g

NBWM 3/24
WMNB 3/07

~~DIFF FROM~~ WET SOIL WT 4.1g

R7007880224 1200 SJR

TARE WT VIAL 9.6g
VIAL + DRY SOIL Vial dropped + broken, unable to
DRY SOIL retrieve sample - 09/14/88

noted in WMNB 3/07

~~DIFF FROM~~ WET SOIL WT 3.7g

R7007880224 1300 SJR

TARE WT VIAL 9.5g
VIAL + DRY SOIL 10.2g
DRY SOIL 0.7g

NBWM 3/24

~~DIFF FROM~~ WET SOIL WT 1.9g

R7007880224 1400 SJR

TARE WT VIAL 9.8g
VIAL + DRY SOIL 12.11.2
DRY SOIL 1.4g

WMNB 3/07

~~DIFF FROM~~ DRY SOIL 2.5g

R7007880224 1600 SJR

TARE WT VIAL 9.7g
VIAL + DRY SOIL 11.0g
DRY SOIL 1.5g

WMNB 3/07

~~DIFF FROM~~ WET SOIL WT 3.4g

3/8/88 R7007

R7007880224 1602 SJR

TARE WT VIAL	9.8g
VIAL & DRY SOIL	10.1g
DRY SOIL	0.3g
WET SOIL WT	0.9g

WM NB 3/07

R7007880224 1702 SJR

TARE WT VIAL	9.7g
VIAL + DRY SOIL	11.3g
DRY SOIL	1.6g
~~DIFF FROM~~ WET SOIL WT	2.6g

NB WM 3/34 and WM NB 3/01

3/8/88 R7007

1500 Tare wt condensate receiver flasks:
Flask, #1 reactor : 106.2g
Flask, #2 reactor : 110.3g

1515 ~~1515~~ Making up more 1:1:2 (PEG:TMH:DMSO) for reactions on 03/09/88 in ratios PEG=150g : TMH=150g : DMSO = 300g

1520 Tare wts silica gel moisture trap tubes:
Silica gel tube, Reactor #1: 21.3g
Silica gel tube, Reactor #2: 20.8g

1530 Tare wts; Cold-trap receivers for distillate/condensate system
Cold-trap receiver, Reactor #1: 79.9g
Cold-trap receiver, Reactor #2: 80.9g

3/9/89 R7007

0730 TEMPS OIL BATH 112.7°C
REACTOR #1 110°C
REACTOR #2 109°C

0800 TEMPS OIL BATH 130.9°C
REACTOR #1 112°C
REACTOR #2 112°C

TAKE SAMPLE R7007880309080051G Extracted

TARE WT VIAL 9.6
VIAL + SLURRY WT 17.5g
SLURRY WT 7.9g
WET SOIL WT AFTER 3 WATER 12.8-9.6 = 3.2g
Soil Dry wt: 1.3g

TARE WT WATER WASH VIAL ~~11.1~~ 20.1g
VIAL + WATER WASHES 35.2
WATER WASHES 15.1g

0802 TAKE SAMPLE R7007880309080251G Extracted

TARE WT VIAL 10.1g
VIAL + SLURRY 18.3
SLURRY 8.2g

WET SOIL WT AFTER 3 WATER WASHES 13.6-10.1 = 3.5
Dry soil: 1.4g

TARE WT WATER WASH VIAL 20.1g
VIAL + WATER WASHES 35.1
WATER WASHES 15.0g

0830 Temps Oil Bath 132.9°C
Reactor #1 115°C
Reactor #2 115°C

3/9/88 R7007

1000 Drew Sample # R7007880309100 05T6 Arrested

Tare wt vial 9.5g
vial + Slurry ~~11.9~~ 16.9
Slurry wt ~~2.4g~~ 7.4g

wet soil wt after 3 washes Dry Soil: 0.4g

Tare wt wash vial 20.3g
wash + vial ~~17.~~
wash wt

1002 Drew Sample # R7007880309100 25T6 Arrested

Tare wt vial 9.6g
vial + Slurry 17.2
slurry wt 7.6g

wet soil wt after 3 washes Dry soil wt: 0.6g

Tare wt wash vial 20.1g
washes + vial
wash wt

Sample dilute & contain Rough Soil to come into washing

1020 Temps Oil Bath 131.1°C
Reactor #1 131°C
Reactor #2 134°C

1030 Temps Oil Bath: 132.5
Reactor #1 136
Reactor #2 139

Oil bath in small pan too low, so oil temp reading inaccurate. Balance adjusted, oil temp ↑ 162.3°C by 1035

R7007

03/09/88 NB High PCB reactions

1200 cont. R7007880309 1200 SJR:
Tare wt vial: 10.1g
Vial + slurry wt: 13.9g (mostly solid)
Slurry wt: 3.8g
Wt. p̄ 3 water washes: 14.0g (!) Wet soil: 3.9g
Dry soil: 2.0g

1202 Drew sample # R7007880309 1202 SJR:
Tare wt vial: 9.6g
Vial + slurry wt: 15.7g
Slurry wt: 6.1g
Wt. p̄ 3 water washes: 12.4g Wet soil: 2.8g

1200 TARE WT WATER WASH VIAL 20.2g
VIAL + WATER WASH 35.7g
WATER WASH 15.5g

1202 TARE WT WATER WASH VIAL 20.1g
VIAL + WATER WASH 38.0g
WATER WASH 17.9g

1210 TURN HEATER TO 165°C

1235 Turn oil heater ↓ to 162°C

1240 TURN OIL HEATER TO 160°C

R7007

03/09/88 NB, High PCB reactions

1400 Drew sample # R70078803091400SJR

Tare wt. vial: 9.6 g
Vial + Slurry wt: 17.2 g
Slurry wt: 7.6 g
~~Wet~~ JPR Wt. p̄ 3 water washes: 10.8 g Wet soil: 1.2 g
Dry soil: 0.6 g

Tare wt wash water vial: 19.8 g
Vial + water washes: 43.1 g
Water washes wt: 23.3 g

1402 Drew sample # R70078803091402SJR

Tare wt. vial: 9.5 g
Vial + Slurry wt: 15.5 g
Slurry wt: 6.0 g
Wt. p̄ 3 water washes: 12.0 Wet soil: 2.5
Dry soil: 1.1 g

Tare wt. water wash vial: 20.1 g
Vial + water washes: 38.5 g
Water wash wt: 18.4 g

KOH check on reaction 1
R70078803091400RJR (Reagent + Wash from pool sample)
full vial 43.2 g after aliquot removed 41.3 after 2nd aliquot 40.6
empty vial 19.8 2nd aliquot = 0.7 g
total 23.4 g aliquot mass = 2.9 g
Slurry mass was 7.6 g titrated w 3 ml of 0.2 N HCl (overshot)
Reagent ≈ 7.6 − 1.2 = ~~5.1~~ 6.4 g 2nd aliquot titrated w 0.02 N H_2SO_4, 10.4 ml

% KOH in reagent (should be ~15%) = $\frac{10.4\ ml \times 0.02\ mg/ml \times 56\ mg/mg}{0.7\ g \times \frac{6.4}{23.4\ g}} \times 100 = 6.08\ \% > 60.8\ mg/g$

Reactor 2 - R70078803091402RJR
Full vial 38.5 after aliquot removed 37.3 g
tare 20.1 aliquot mass = 1.2 g
18.4 titrated w 27.1 ml 0.02 N H_2SO_4, Slurry Reagent was 6.0 − 2.5 = 3.5 g

% KOH = $\frac{27.1 \times .02 \times 56 \times 18.4}{1.2 \times 3.5 \times 10} = 13.3\ \%$ > 133 mg/g

R7007

03/09/88 NB, High PCB

1600 Temps:

Oil bath: 160°C
Reactor # 1: 153°C
Reactor # 2:

Drew sample # R7007880309 1600 SJR
Tare wt. vial: 9.7g
Vial + slurry wt: 14.2g
Slurry wt: 4.5g
Wt. @ 3 washes: 12.8g Wet soil: 3.1g
Dry soil: 1.7g

Tare wt. water wash vial: 19.9g
Vial + water washes: 36.8g
Water washes wt: 16.9

1602 Drew sample # R7007880309 1602 SJR
Tare wt. vial: 10.2g
Vial + slurry wt: 14.9g
Slurry wt: 4.7g
Wt. @ 3 water washes: 14.2g Wet soil 4.0g
Dry soil: 2.2g

Tare wt. water wash vial: 20.1g
Vial + water washes: 36.0g
Water washes wt: 15.9g

1700 Temps:

Oil: 161°C
Reactor # 1: 152°C
Reactor # 2: 152°C

Drew sample # R7007880309 1700 SJR
Tare wt. vial: 9.5g
Vial + slurry: 12.7g
Slurry wt: 3.2g
Wt. @ 3 washes: 12.3g Wet soil: 2.8g

Tare wt. water washes vial: 20.1g
Vial + water washes: 37.2g
Water washes wt: 17.1g

R7007

03/09/88 WB, High PCB

1845 Temps both reactors < 100°C added 525g DI water to both. keep agitating X 15 min to mix H_2O well

1910 Oil circulator turned off, stirring motors turned off

Oil bath : 99.6°
Reactor # 1 : 50°C
Reactor # 2 : 53°C

3/10/88 R7007

1325 TARE WT 250 ml BEAKER 119.72g
BEAKER + REAGENT 120.72g
REAGENT 1.00g

ADD 15 ml OF WATER CHECK PH=9 ADD
DROPS PHENOPHTHALEIN

START BURET AT 15.0 ml END BURET AT 25.4 ml
10.4 ml 0.02 N H_2SO_4

(R7007880310145RG)

$$mg/g\ KOH = \frac{10.4\ ml \times 0.02\ N \frac{mmole}{ml} \times 56\ \frac{mg}{mmole}}{1.0\ g} = 11.6\ mg/g\ KOH$$

1620 Wt. of condensate receivers from 03/09/88:
Tare wt. cond. flask, Reactor #1: 106.2g
Condensate + flask wt : 310.5g
*R7007880310162OCJR → Condensate wt : 204.3g

Tare wt. cond. flask, Reactor #2: 110.3g
Condensate + flask wt : 322.1g
R7007880310162 2CJR → Condensate wt: 211.8g

Note: Both condensate receiver flasks have discreet globs of oily-appearing, pale greenish-yellow material on the bottom of the flask.

1625 Weighing condensate receiver flasks for continuation of reaction 03/11/88:
Tare wt. cond. flask, reactor # 1: 112.6g
Tare wt. cond flask reactor #2: 106.6g

3/11/88 R7007

0545 TARE WT BEAKER 49.9g REACTOR #1
BEAKER & SOLID KOH 89.9
SOLID KOH 40.0g

TARE WT BEAKER 49.7g
BEAKER & SOLID KOH 89.7g
SOLID KOH 40.0g

0600 TEMPS OIL BATH 22°C
REACTOR #1 39°C
REACTOR # 2 36°C

0610 Oil bath not circulating, had to pull sm. amt of oil from lg. pan to sm. pan. Some large piece of soil cake is circulating in reactor #1, jams against thermometer & stops agitator dead. Raised thermometer probe ~ 2cm in housing.

0630 Temps Oil: 65.4°C
Reactor #1: 49°C
Reactor #2: 51°C

Reactor #1 still making scraping/grinding noises, but solid chunk no longer striking thermometer probe.

0700 Temps: Oil: 99.3°C
Reactor #1: 83°C
Reactor #2: 87°C

Drew sample # R7007880309 0700 SJR
Tare wt. 8ml vial: 9.8g
Vial + slurry wt: 18.3g
Slurry wt: 8.5g
Wt. ~~p~~ 3 water washes: 11.5g Wet soil: 1.7g

R7007

03/11/88 NB, High PCB, continuation

0830 Temps: oil: 166.7°C
Reactor #1: 145°C
Reactor #2: 145°C

0900 TEMPS OIL BATH 166.9°C
REACTOR #1 151°C
REACTOR #2 148°C

0900 TAKE SAMPLE # R7007880311090OSJR

TARE WT VIAL 9.7g
VIAL + SLURRY 17.0g
SLURRY 7.3g

WT AFTER 3 WATER WASHES 12.1g WET SOIL WT 2.4g

TARE WT WATER WASH VIAL 20.2g
VIAL + WATER WASHES 42.0g
WATER WASHES ~~12.1g~~ 21.8g

0902 TAKE SAMPLE # R7007880311090 2SJR

TARE WT VIAL 9.8g
VIAL + SLURRY 21.1g
SLURRY 11.3g

WT AFTER 3 WATER WASHES 14.6 WET SOIL WT 4.7g

TARE WT WATER WASH VIALS 19.9g
VIAL + WATER WASHES 38.7
WATER WASHES 18.8g

0910 Reactor #2 occasionally jumping/snatching as though a large chunk is rotating about inside + causing the agitator to jump.

3/11/88 R7007

1030 TEMPS OIL BATH 112 °C
REACTOR #1 153 °C
REACTOR # 2 153 °C

1100 TEMPS OIL BATH 161.5°C
REACTOR #1 153°C
REACTOR # 2 153°C

TAKE SAMPLE R7007880311100553R

TARE WT VIAL 9.8g
VIAL + SLURRY 20.4g
SLURRY 10.6g

WT AFTER 3 WATER WASHES: 13.1g WET SOIL WT 3.3g

TARE WT WATER WASH VIAL 20.1g
VIAL + WATER WASHES 39.9g
WATER WASHES ~~[illegible]~~ 19.8g

1102 TAKE SAMPLE R7007880311110253R

TARE WT VIAL 9.8g
VIAL + SLURRY 16.7g
SLURRY 6.9g

WT AFTER 3 WATER WASHES: 13.3g WET SOIL WT: 3.5g
Dry soil: 2.8g

TARE WT WATER WASH VIAL 20.1g
VIAL + WATER WASHES 36.8g
WATER WASHES 16.7g

3/11/88 R7007

1230 TEMPS OIL BATH 162°C
REACTOR #1 152°C
REACTOR #2 153°C

1300 TEMPS OIL BATH
REACTOR #1
REACTOR #2

TAKE SAMPLE R7007880311 1300 ~~SAR~~

TARE WT VIAL 9.9g
VIAL + SLURRY 17.3g
SLURRY 7.4g

WT AFTER 3 WATER WASHES 13.0g WET SOIL WT 3.1

TARE WT WATER WASH VIAL 19.8g
VIAL + WATER WASH 38.8g
WATER WASHES 19.0g

1302 TAKE SAMPLE R7007880311 1302 S

TARE WT VIAL 9.7g
VIAL + SLURRY 19.2g
SLURRY 9.5g

WT AFTER 3 WATER WASHES 14.3 WET SOIL WT 4.6g

TARE WT WATER WASH VIAL 20.1g
VIAL + WATER WASHES 38.7g
WATER WASHES 18.6g

3/11/88 R7007

1500 Temps: Oil bath 162.2°C
Reactor 1 150°C
Reactor 2 150°C

Take Sample # R7007880310150 0STG from reactor 1

Tare Vial 9.60g
+ Slury 16.3g
Slurry wt 6.7g

After 3 water washes: 12.1 wet soil = 2.5g

Tare Reagent & Wash vial 19.85
+ " " " 36.85
Net Reagent & Washes 17.0g

1502 Take Sample # R7007880310150 2STG from Reactor 2

Sample Vial tare 9.69g
plus Slurry 17.2g
Slurry Wt 7.51

After 3 water washes: 10.65 wet soil = 0.96g

Reagent & wash vial tare 20.28
+ Reagent & washes 41.40
Net weight 21.12g

2

3/11/88 R7007

1700 Temps Oil Bath 162.2°C
Reactor 1 147°C
Reactor 2 149°C

Drew Sample R7007880311700 5T6

Tare wt vial 9.8 g
vial + slurry 13.3
Slurry wt 3.5 g

wt after 3 washes 11.1 wt of wet soil = 1.3 g

Tare wt of wash vial 19.9 g
vial + washes 41.1
wt of washes 21.2

1702 Drew sample R7007880311702 5T6

Tare wt vial 9.9 g
vial + slurry 17.2
slurry wt 7.3 g

wt after 3 washes 11.5 wt of wet soil = 1.6 g

Tare wt of wash vial 20.1
vial + washes 38.8
washes wt 18.7 g

1730 Temps Oil Bath 162.2°C
Reactor 1 149°C
Reactor 2 151°C

1750 Turned off oil Bath heater

3/14/88 R7007

0630 EXTRACT SAMPLES R7007 880311 1800 STG
R7007 880311 1802 STG

0810 TARE WT FLASK 84.6 g REACTION 1
WT FLASK + REAGENT 85.6 g
REAGENT 1.0 g

ADD 15.0 ml DI WATER CHECK PH = 11
ADD 10 DROPS PHENOPHTHALEIN

START BURET AT 1.0 ml, END BURET AT 39.1 ml
USE ml 0.02 N H_2SO_4

$$mg/g\ KOH = \frac{38.1\ ml \times 0.02N \frac{m\ mole}{ml} \times 56\ mg/m\ mole}{g} = 42.7\ mg/g\ KOH$$

0815 TARE WT FLASK 91.45 g
WT FLASK + REAGENT 92.47 g
REAGENT 1.02 g

ADD 15.0 ml DI WATER, CHECK PH = 10
ADD 10 DROPS PHENOPHTHALEIN

START BURET AT 1.0 ml, END BURET AT 33.1 ml
USE ml 0.02N H_2SO_4

$$mg/g\ KOH = \frac{32.1\ ml \times 0.02N \frac{m\ mole}{ml} \times 56\ mg/m\ mole}{1.02\ g} = 35.2\ mg/g\ KOH$$

R7007

03/14/88 NB, High PCB

1325 cont. Weighing silica gel moisture trap tubes:
Tare wt. silica gel tube, Reactor #2: 20.8g
Tube + condensate wt: 21.2g
Condensate wt: 0.4g
Note: Both abovementioned silica gel tubes displayed black discoloration, 1/4 to 1/2 way up tube.

1335 Weighing "cold trap" assemblies:
Tare wt. Cold trap assembly, Reactor #1: 79.9g
Cold trap + condensate: 80.1g
Condensate wt: 0.2g

Tare wt. cold trap assembly, Reactor #2: 80.9g
Cold trap + condensate wt: 81.0g
Condensate wt: 0.1g

1340 Weighing reactor bodies, & contents, High PCB reactions 03/09 to 03/11/88:
Reactor body + slurry, Reactor #1: 798.6g
Tare wt. reactor body #1: 568.5g
Contents wt. Reactor #1: ~~164.9g~~ 230.1g

Reactor body + slurry, Reactor #2: 796.5g
Tare wt. reactor body #2: 587.9g
Contents wt., Reactor #2: 208.6g

1420 Transferring Reactor contents to 250ml jars:
Tare wt. 250ml jar, Reactor #1: 178.3g
Jar + reactor contents wt: 416.8g
(From 1340 above) → Contents wt. Reactor #1: 230.1g
#R7007880314 1350 SJR → Transferred contents wt: 238.5g
Transfer losses, Reactor #1: gained 8.4g! Note that reactor lost ≈ 15g during 24 hr. reaction time

04

3/15/88 RDCC

0920 TARE WT RING 120.9g
RING & REACTOR 684.6g
REACTOR 563.7g

TARE RING & REACTOR 684.5g USING TRIPLE SENSOR
RING, REACTOR & SOIL 984.5g
SOIL 300.0g
USING HIGH PCB SOIL

TARE WT VIAL 9.6g
VIAL & SOIL 12.9g
SOIL 3.3g

TARE WT CONDENSATE FLASK 119.1g

TARE WT COLD TRAP 80.0g NO HOSES

TARE WT SILICA GEL TUBE 20.6g
R7007 880321-1800.0

3/21/88 TARE WT BEAKER 244.0g 244.2g AFTER DMSO
BEAKER & DMSO 344.0
DMSO 100.0g
TARE BEAKER DMSO 344.0g
BEAKER DMSO, PEG 394.0g
PEG 50.0g
TARE BEAKER, DMSO, PEG 394.0g
BEAKER, DMSO, PEG, TMH 444.0g
TMH 50.0g

~~45%~~ 45% KOH BEAKER TARE 109.4g
BEAKER & KOH 209.4g
KOH 100.0g

R7007

03/21/88 NB, High PCB

0820 Oil bath heater alarms as soon as temp reaches 176°C
Temp↓ to 175.4°C

0830 Temps: Oil: 174.4°C
Reactor: 144°C

Will wait on extracting R7007880321 0800SJR due to problems c̄ stds. injection on HP GC.

0840 Condensate slowed to occasional drip, temp in Reactor @ 145.

0845 RLP reset oil bath alarm circuit potentiometer to 200°, temp reset to 185°C

Spiking + extracting 0800 sample

0900 Temps: Oil: 184.6°C
Reactor: 154

Drew sample # R7007880321 0900SJR

0910 Approx 2-2.5 ml spilled out of 10ml volumetric for sample # R7007880321 0800SJR. Area cleaned c̄ Hx-soaked towel.

0930 Temps Oil: 184.5°
Reactor: 161°C

1000 Temps Oil: 184.6°C
Reactor: 166°C

Drew sample # R7007880321 1000SJR

1030 Temps: Oil: 184.5°C
Reactor: 168°C

1100 Temps Oil: 184.6 °C
Reactor: 173°C

Drew Sample # R7007880321 1100SJR

3/21/88 R7007

"never mind" JPR

~~0100 OIL BATH 22.3°C~~
~~[illegible] 07.°C~~

1115 Extracting R7007880318110 2SJR, Starting soil per standard method.

1130 ~~1115~~ JPR Temps: Oil: 184.5°C
Reactor: 176.°C

1200 TEMPS OIL 184.5°C
REACTOR 178°C

Drew sample # R7007880321120 0SJR, washed + extracted per standard GRC.

1230 Temps: Oil: 184.4°C
Reactor: 178°C

1300 Temps: Oil: 184.4°C
Reactor: 178.°C

Drew Sample # R7007880321130 0SJR, will extract this sample since 1200 sample shows reaction to be virtually "clean."

1330 Temps: Oil: 184.5°C
Reactor: 179.°C

1400 Temps: Oil: 184.3°C
Reactor: 179.°C

Drew sample # R7007880321140 0SJR, washed only, reactor heating shut down, began cooling c̄ fan, oil bath circulating, reactors still agitating.

R7007

03/24/88 New Bedford

1045 Extracted condensate for High PCB reaction 03/21/88:

Tare wt. 250 ml jar: 178.1g
Jar + condensate: 396.8g
#R7007880321430CRG → Extracted condensate: 218.1g

1100 Wt. of reactor + slurry: 946.1g
Reactor contents dumped into 500 ml jar
Tare wt. 500 ml jar: 230.6g
Reactor contents + jar: 622.7g
Recovered → Reactor contents wt: 392.1g

Wt., reactor bottom ∓ cleaning: 547.1g
Contents + Reactor bottom wt: 946.1g
Calculated Contents wt: 399.0g

4

3/28/88

0600 ADD 1:1:2 PEG; TMH: DMSO & 45% KOH

TEMPS OIL BATH 22 °C
REACTOR 28 °C

0630 Temps: Oil Bath: 81 °C
Reactor : 48 °C

0700 Temps: Oil Bath: 126 °C
Reactor : 94 °C

0715 Reactor @ 108 °C, Boiling very actively, condensate coming across rapidly, obviously heavy oil globules in condensate. Vacuum turned off, reactor still "burped" reagent into condensate receiver. Will add 1% vermiculite & hopefully control foaming + "burping."

TARE WATER BOTTLE 57.65 g
WATER & BOTTLE 138.78

WASH CONDENSER & COND FLASK
REWEIGH WTER BOTTLE

^4

3/29/88 R7007

RUN 1SAL REACTION WITH DUAL CONDENSERS
ON ON EACH SIDE OF 3 NECK FLASK

0545 WEIGH OUT 200g WATER + ADD TO REACTOR

0600 TEMPS OIL BATH 24°C
REACTOR 24°C

0630 Temps: Oil Bath: 85°C
Reactor: 52°C

0700 TEMPS OIL BATH 120°C
REACTOR 94°C

0725 Reactor "burped" again. Blowout tube moved water column ± .25". Approximately 500-600ml slurry boiled into 3000ml condensate receiver. System broken down & cooled. Reactor @ 109°C when it "burped"
Added another "T"-joint above existing apparatus, lengthened vertical column. Poured slurry back into reactor

0755 Started reactor back up. Temps Oil Bath: 114°C
Reactor: 99°C

0830 Temps: Oil Bath: 145°C
Reactor: 109°C

0900 TEMPS OIL BATH 155°C
REACTOR 110°C

0930 TEMPS OIL BATH 161°C
REACTOR 111°C

SAMPLE NUMBER	8ML Vial Tare	8ml vial& Slurry wt.	Slurry Wt.	Water Wash Vial Tare Wt.	Vial&Water Wash Wt.	Water Wash Wt.	8ml Vial& Wet Soil Wt.	Wet Soil Wt. after Wash	8ml Vial& Dry Soil Wt.	Dry Soil Wt.	PPM Conc.
R7007880~~331~~ 29 300 S/R	9.7g	14.5g		20.6	34.6		13.9g	3.7g	11.6g	1.9g	
R7007880~~331~~ 29 S											
R7007880~~331~~ 29 S											
R7007880~~331~~ 29 S											
R7007880~~331~~ 29 S											
R7007880~~331~~ 29 S											
R7007880~~331~~ 29 S											
R7007880~~331~~ 29 S											
R7007880~~331~~ 29 S											
R7007880~~331~~ 29 S											
R7007880~~331~~ 29 S											
R7007880~~331~~ 29 S											

3/30/88 R7017

1030 TARE WT RW1 131.0g
RW6 + 3000 ml FLASK 722.7g
3000 ml FLASK 591.7g

1040 WT OF SILICA GEL TUBE 21.7g
R7007880831180 0 R6

3/31/88 R7007

0600 ADD REAGENT TO REACTOR

TEMPS OIL BATH: 28°C
REACTOR : 173°F or 78°C

0630 TEMPS OIL BATH 82.7°C
REACTOR 159°F OR 70.5°C

0700 Temps: Oil Bath: 119°C
Reactor : 96°C

Drew sample # R7007880331070 0SJR

0730 TEMPS OIL BATH ~~RT~~ 145°C
REACTOR : 124°C

Reactor showing only minimal frothing/boiling

0735 Reactor boiling more actively now. Still no obvious condensate coming across in either column.

0740 Reactor still boiling under control, some condensate coming across in front column.

0800 Temps: Oil Bath: 157°
Reactor : 127°

Drew sample # R7007880331080 0SJR (Extracted)

Reactor still boiling nicely, under control

0830 Temps: Oil Bath: 164°C
Reactor : 130.5°C

0900 Temps: Oil Bath: 168°C
Reactor : 135°C

F2

R7007

03/31/88 New Bedford 1 gallon, High PCB

0900 Drew sample# R7007880331 0900 SJR

0930 Temps: Oil Bath: 173°C
Reactor: 142°C

1000 Temps: Oil Bath: 174.5°C
Reactor: 146°C

Drew sample# R7007880331 1000 SJR

1030 Temps: Oil Bath: 174.5°C
Reactor: 150.5°C

1100 Temps: Oil Bath: 174°C
Reactor: 154°C

Drew sample# R7007880331 1100 SJR

1130 TEMPS OIL BATH 174.3°C
REACTOR 313°F OR 156.1°C

1200 Temps: Oil Bath: 174.2°C
Reactor: 316°F OR 157.7°C

Drew sample# R7007880331 1200 SRC

1230 TEMPS OIL BATH 174.1°C
REACTOR 160°C

1300 Temps: Oil Bath: 174°C
Reactor: 162°C

1330 Temps: Oil Bath: 173.7°C
Reactor: 162.7°C

Some sort of distillation still occurring in proximate area of condensation column.

R7007

3/31/88

1830 Temps Oil Bath 113.1°C
Reactor 121.7°C

1900 Temps 0.1 - 98.3 Reactor: 224°F (107°C)

Water added - Beaker + Water 1879.7g
Beaker after addition 290.9g
Water added 1588.8g

Reactor Temp after addition = 190°F (88°C)

1900 Copper & Acid washed sample # R7007880331800STG again due to the large 70 peak.

2000 Reactor 168°F (76°C) Bath 70°C
Everything turned off (including stirring)

4/4/88 M007

TARE WT BOX 1.0 lb
BOX + REACTOR ENDING 16.2 lb
ENDING REACTOR 15.2 lb

HIGH NB SOIL

empty reactor tare (pg 4) = 2.7 lb

0830 TARE WT REACTOR FOR LOW NB SOIL

1274.0 s
BOX + REACTOR 1738.7 s

TARE BOX 1.0 lb
BOX + REACTOR 3.8 lb
REACTOR 2.8 lb

TARE BOX + REACTOR 3.8 lb
BOX, REACTOR LOW NB SOIL 9.8 lb
LOW NB SOIL 6.0 lb

0905 TARE WT JAR 384.0 s
JAR + ~~SOLID~~ SOLID KOH 1301.2
SOLID KOH 917.2 917.2 s

JAR WT PLASTIC ~~[illegible]~~ s 74.4 s
JAR + SOLID KOH 518.4 s
SOLID KOH 444.0 s 444.0 s
1361.2 s = 3 lb

TARE WT COLD TRAP 152.3 s WITH STOPPER

TARE WT RING 131.0 s
RING + 3000 ml FLASK 712.7 s
3000 ml FLASK 581.7 s

SAMPLE NUMBER	8ML Vial Tare	8ml vial& Slurry wt.	Slurry Wt.	Water Wash Vial Tare Wt.	Vial&Water Wash Wt.	Water Wash Wt.	8ml Vial& Wet Soil Wt.	Wet Soil Wt. after Wash	8ml Vial& Dry Soil Wt.	Dry Soil Wt.	PPM Conc.
R70078800405 0700 SJR	9.8g	20.2g	10.4g	20.5g	43.2g	22.7g	12.8g	3.0g	11.1g	1.3g	455 90%
R70078800405 0800 SJR	9.8g	19.4g	9.6g	20.6g	44.3g	23.7g	12.2g	2.3g	11.5g	1.2g	134.5 [illegible]
R70078800405 0900 SJR	9.8g	19.7g	9.9g	20.6g	44.7g	24.1g	12.7g	2.9g	11.2g	1.4g	91.7 [illegible]
R70078800405 1000 SJR	9.8g	19.4g	9.6	20.5g	Void						
R70078800405 1100 SJR	9.7	18.2g	8.5g	20.6g	39.9			~3.0g	11.3g	1.6g	16.5 73%
R70078800405 1200 SJR	9.9g	20.0g	10.1g	20.6g	40.1g	19.5g	13.1g	3.2g	11.7g	1.5g	2.7 63%
R70078800405 1300 SJR	9.9g	17.3	7.4g	20.5g	43.5	23.0g	12.0g	2.1g	10.9g	1.0g	2.3 86%
R70078800405 1400 SJR	9.8g	19.6g	9.8g	20.5g	43.2	22.7g	12.9g	3.1g	11.4g	1.6g	0.59 81%
R70078800405 1500 SJR	9.9g	18.4g	8.5g	20.4g	~~41.6g~~ 41.6g	20.2g	13.0g	3.1g	11.4g	1.5g	0.45 85%
R70078800405 S											
R70078800405 S											
R70078800405 S											
R70078800404 1200 SJR	9.9	13.1g	3.2g								435 91%

R7007

04/05/88 New Bedford - 1 gal reaction

0830 Temps: Oil Bath: 169°C
Reactor : ~~143°C~~ 133°C

0900 TEMPS OIL BATH 173.3°C
REACTOR 280°F OR 137.7°C

Drew sample# R7007880405090 0SJR (Extracted)

0930 Temps: Oil Bath: 174°C
Reactor : 143°C

1000 TEMPS OIL BATH 174°C
REACTOR 148.8°C

1030 TEMPS OIL BATH: 174°C
REACTOR : 153°C

SAMPLE R7007880405100 0SJR DROPPED DURING WATER WASHING SAMPLE IS VOID

1100 Temps: Oil Bath: 174°C
Reactor : ~~156.5°C~~ 156°C

Drew sample# R7007880405110 0SJR (Extracted)

1130 Temps: Oil Bath: 174°C
Reactor : 159°C

1200 TEMPS OIL BATH 173.9°C
REACTOR 321°F OR 160.5°C
DREW SAMPLE R7007880405120 0SJR EXTRACTED

1230 TEMPS OIL BATH 173.8°C
REACTOR 322°F OR 161°C

4/6/88 R7007

0650 TARE WT RING 131.0 g
TARE ~~TARE RING~~ RG 3000 ml FLASK 581.7 g
RING FLASK + CONDENSATE ~~1581.4 g~~
CONDENSATE 864.7

R7007880405 1120 CRG
1241.6 g

TARE WT RING 131.0 g
TARE WT 1000 ml FLASK 241.1 g
FLASK, RING, + CONDENSATE 753.0 g
CONDENSATE 372.9

TARE WT BURP BUCKET 81.0 g
BURP BUCKET + CONDENSATE 139.9 g
CONDENSATE 58.9 g

AIR COOLED

TARE WT COLD TRAP 152.3 g
COLD TRAP ENDING 152.3 g
COLD TRAP GAIN 0.0 g

TARE WT SILICA GEL TUBE 20.3 g
ENDING WT SILICA GEL TUBE 20.3 g
SILICA GEL TUBE GAIN 0.0 g

0840 Weighing reactor + contents: Total wt slurry, reactor + box: 16.4 lbs

4/21/88 R)007

DO CENTRIFUGE WITH SAND REACTION

TOTAL WT OF JAR, SAND & 1:1:2 15.2 lb
WT AFTER PUTTING INTO CENT 2.6 lb
SAND, & 1:1:2 12.6 lb

SP# TARE WT JAR ~~2.6 lb~~ 2.3 lb
R)007880421094 0RR6 JAR & FILTRATE ~~7.8 lb~~ 7.8 lb
FILTRATE ~~5.2 lb~~ 5.5 lb

WT OF WASH #1

TARE OF JAR 2.3 lb
JAR & WATER 10.3 lb
WATER 8.0 lb

TARE WT OF JAR 2.3 lb
JAR & WASH #1 10.3 lb
WASH # FILTERED 8.0 lb

TARE WT JAR 2.3 lb
JAR & WASH #2 WATER 8.3 lb
WATER 6.0 lb

TARE WT JAR 2.3 lb
JAR & WASH #2 8.6 lb
WASH #2 FILTERED 6.3 lb

FINISHED SOL 2.6 lb TARE
12.2 lb
9.6 lb NET SOL

Reg. Bull

4/21/88 R7007

TARE WT ~~WA~~ SOIL JAR 2.3 lb
JAR & WET SOIL 4.4 lb
WET SOIL WT 2.1 lb

SF # R7007880421155 05 RG

4/22/88

PROCEDURE USED FOR CENTRIFUGING.

THE CENTRIFUGE WAS STARTED & THE REAGENT JUG PLACED AT THE ~~OUT LET~~ DISCHARGE POINT OF THE CENTRIFUGE AND THE CONTENTS OF THE REACTOR MIXED UP. THIS MATERIAL WAS SLOWLY FED INTO THE CENTRIFUGE AND ALLOWED TO SPIN FOR 5 MIN. A THICK EMULSION WAS LEFT IN THE CENTRIFUGE. THE REAGENT IN THE BOWL WAS DECANTED AND ADDED TO WHAT HAD BEEN CENTRIFUGED. THE REAGENT PORTION WAS THEN RUN THROUGH THE CENTRIFUGE A SECOND TIME. THE EMULSION STILL REMAINED. THE REAGENT WAS AGAIN DECANTED AND ADDED TO THE CENTRIFUGE PORTION. THE SOIL & EMULSION WERE REMOVED FROM THE CENTRIFUGE AND ADDED TO A JUG. THE REACTOR WAS RINSED WITH WASH WATER #1 AND PUT IN THE JUG. THE CONTENTS OF THE JUG WERE WELL MIXED. THE CENTRIFUGE WAS AGAIN STARTED WITH WASH WATER #1 JUG AT THE DISCHARGE. THE CONTENTS OF THE JUG WITH SOIL AND WASH WATER WERE ADDED TO THE CENTRIFUGE. THE REMAINING WASH WATER RINSED REACTOR & JUG BEFORE ADDING TO THE CENTRIFUGE.

Roger Bull

4/22/88 R7007

SP # R7007880422105 0SR6

TARE WT JAR FOR JORDAN 126.1g
JAR & SOIL AFTER WASH #1
WET SOIL WASH #1

TARE WT JAR FOR GALSON 134.7g
JAR & SOIL AFTER WASH #1 239.4g
WET SOIL WASH #1 104.7g

TARE WT JAR 2.4 lb
JAR & WASH WATER #2 8.4 lb
WASH WATER #2 ADDED 6.0 lb

TAR WT JAR 2.3 lb
JAR & WASH #2 8.4 lb
WASH #2 6.1 lb
SP # R7007880422 1057 WR6

TARE WT JAR 2.3 lb
JAR & WET SOIL AFTER WASH #2 4.0 lb
WET SOIL AFTER WASH #2 1.7 lb
SP # R7007880422 1120 SR6

WT OF REACTOR 1253.9g

Rogh Sall

4/25/88 R7007

TARE WT JAR 132.5g
JAR & WET WASHED SOIL AFTER WASH #1 242.7g
WET WASHED SOIL FROM WASH #1 110.2g
SP # R7007880425095 5RG

WATER WASH #2

JAR TARE WT 2.4 lb
JAR & WATER 8.4 lb
WATER 6.0 lb

TARE WT JAR 2.3 lb
JAR AND WASH WATER #2 8.4 lb
WASH WATER #2 6.1 lb
SP # R7007880425 1000WRG

TARE WT JAR 2.3 lb
JAR AND WET WASHED SOIL 3.8 lb
WET WASHED SOIL 1.5 lb
SP # R7007880425 1025SRG

REACTOR WT AFTER 1998.3g

[illegible]

4/26/88 R7007

NO LOW SOIL: SHIPPED SAMPLES TO JORDAN

1145	50g	TARE WT JAR	126.1g	
		JAR & WET WASH #1 SOIL	195.3g	FR SP # R7007880422 1050 SRG
		WET WASH #1 SOIL		METALS
	100g	TARE WT JAR	131.1g	
		JAR & WET WASH #2 SOIL	250.5g	FR SP # R7007880422 1120 SRG
1148		WET WASH #2 SOIL		METAL SEMI VOLATILES
1152	FULL	TARE WT JAR	125.8g	
		JAR & WET WASH #2 SOIL	318.4g	FR SP # R7007880422 1120 SRG
		WET WASH #2 SOIL		METALS EP TOX
	250g			
COULD NOT FIT IN 1 JAR	FULL	TARE WT JAR	131.2g	
		JAR & WET WASH #2 SOIL	258.2g	FR SP # R7007880422 1120 SRG
		WET WASH #2 SOIL		METALS EP TOX
1200	150ml	TARE WT BOTTLE	512.6g	
		BOTTLE & DRAINED REAGENT	1043.9g	FR SP # R7007880422 0925 RRG
		DRAINED REAGENT		METALS, SOLIDS, SEMI VOLATILES
1208	100ml	TARE WT BOTTLE	509.8g	
		BOTTLE & WASH WATER #1	927.1g	FR SP # R7007880422 1035 WRG
		WASH WATER #1		METALS & SOLID
1210	FULL	TARE WT BOTTLE	513.9g	
		BOTTLE & WASH WATER #1	1325.5g	FR SP # R7007880422 1035 WRG
		WASH WATER #1		SEMI VOLATILES

Roger Ball

4

4/21/88 R7007

NB HIGH SOIL

TARE WT BEAKER 49.1g
BEAKER + DRAINED REAGENT SOIL 59.9g ~~56.3g~~ SP # R7007880425 0925SR6
WET DRAINED REAGENT SOIL 10.8g

TARE WT BEAKER 49.1g 49.1
BEAKER + DRY SOIL 57.1g
DRY SOIL 8.0g 74% solids

TARE WT BEAKER 49.1g
BEAKER + WET WASH #1 SOIL 60.1g SP # R7007880425095SSR6
WET WASH #1 SOIL 11.0g

TARE WT BEAKER 49.1g
BEAKER + DRY SOIL 56.2g 65% solids
DRY SOIL 7.1g

TARE WT BEAKER 160.7g
BEAKER + WET WASH #2 SOIL 223.4g SP # R7007880425 1025SR6
WET WASH #2 SOIL 62.7g

TARE WT BEAKER 160.7g
BEAKER + DRY SOIL 195.4g
DRY SOIL 34.7g 55% solids

Reg. Bull

4/26/88 R7007

W3 HIGH SOIL SAMPLES SHIPPED TO JORDAN

		TARE WT BOTTLE	510.4g	
1128	100.1	BOTTLE + WASH #1	907.6g	FR SP # R7007880425/000 WRG
		WASH #2		SOL 050 METALS
1130		TARE WT BOTTLE	611.0g	FR SP # R7007880426/000 WRG
	FULL	BOTTLE + WASH #1	1192.9g	SEMI VOLATILES
		WASH #2		

Rosy Bell

B

4/27/88 R7007

QA/QC FOR NB HIGH SOIL

FROM SP # R7007880425 1025SRC

SP # R7007880427 1400SRC

TARE WT VIAL	9.7g
VIAL + DRY SOIL	12.3g
DRY SOIL	2.6g

SP # R7007880427 1405SRC

TARE WT VIAL	9.7g
VIAL + DRY SOIL	12.3g
DRY SOIL	2.6g

SP # R7007880427 1410SRC

TARE WT VIAL	9.6g
VIAL + DRY SOIL	12.1g
DRY SOIL	2.5g

SPIKE WITH ARCHLOR 1248 1mg/ml LOT # A. 12592
USE 12.5 µl

pages 65, 66, 71 & 72
Copied from Lab Reactions & Data
Notebook # 3

6/15/88 R7007

Reagent Analysis Prep

Sample #	Cent tubent	tubent Sample	Sample wt	Volume
R7007 8804 250840 RRG	15.5	16.7	1.2	10
R7007 8804 250938 WRG	15.2	16.5	1.3	10
R7007 880425 1000 WRG	15.1	20.3	5.2	10
R7007 8804 220925 RRG	15.3	16.3	1.0	10
R7007 8804 221035 WRG	15.1	16.6	1.5	10
R7007 8804 221050 WRG	15.1	19.3	4.2	10

Tim Sevanto
6/15/88

E-149 after copies stapled in.

This page out of date sequence - Should have been crossed out

Oct 8 1988 Re-analysis of final Gallon Sediments for PCB (especially Monochlorobiphenyl) R7007

Low PCB" Reaction - Final soil is Sample # R70078804221120SRG
(New small samples were taken from that large sample for analysis)
High" PCB" Reaction - Final Soil is Sample # R70078804251025SRG

Sample #	Source	Tare ~~Sulfate~~	8 ml vial weights + wet Samp	+ dry Samp	net wet sample	wet Dry sample	ppm PCB	DCB % R
R70078809008 1400SEM	Low	9.88	14.22	12.73	4.34	2.80	0.50	51
1410SEM	Low	9.78	13.57	12.23	3.79	2.42	~~0.7~~ 0.46	47
1420SEM*	Low*	9.74	13.75	12.37	4.01	2.6	6.4	41
1430SEM	high	9.73	13.56	12.30	3.83	2.6	2.8	70
1440SEM	high	9.77	13.93	12.58	4.16	2.8	2.7	62
R70078809008 1450SEM*	high	9.80	~~15.55~~ 14.74	13.46	~~5.75~~ 4.94	3.7	7.1	55

All samples were spiked with 5 ul of 296 ppm Decachlorobiphenyl
* Samples spiked with 5 ul of 5000 ppm Aroclor 1242.
Samples rested overnight between spiking and extraction
Calculation file is WBWM 09/09 - later moved to WMNB 09/09

*note: DCB recoveries were low (40-70%) - moral is don't spike the night before extracting - spike on the day of extraction. The residual reagent in the soil may have dechlorinated some of the PCB. The Mono results look OK and all of the DCB %R's were over 40. Also 1242 spike recoveries were good.

These analyses must be repeated - See pg 90

Sep 12, 1988
Edwina Mulvic

July 19, 1988 — Analysis of Vent Traps for PCB — R7007

The traps had been allowed to "dry" thoroughly & were stored in a jar (capped). They seem to have absorbed no moisture from the air in the open lab.

Sample #	Reaction	Dry weight	tare
R7007880331800RG	high soil	24.5g	21.7
R7007880405800RG	low soil	22.8g	20.3

The traps were emptied into 4oz jars & desorbed with 30 ml Pesticide hexane. The samples were spiked with 5 ul of std #RS6 (296 ng/ul Decachlorobiphenyl) and were allowed to "soak" overnight in the refrigerator (with occasional agitation from 9:30 AM – 6 p.m.).

July 20, 1988 — ~2ml A portion of the hexane from each sample was shaken with 0.5CC (approximate measure) of Copper powder, then 1 ml of Conc. H_2SO_4 was added (to the 4ml vial). The samples were shaken vigorously with Copper & acid, then centrifuged to separate the Hexane. The Hexane layer was transferred to a 1.5 ml vial for GC injection.

July 19, 1988 Reagent components in soil R7007

I used sample # R7007880422 1120SRG to develop & test the new extraction method. (For KOH I will simply titrate soil slurried w water)

Plan: Weigh ~2-3g soil (wet) into 8 ml vial - slurry with ~3 ml of water & adjust pH to <7 using 25% H_2SO_4. Add ~3 ml Methanol, Shake & spin (centrifuge) decant as much liquid as possible into centrifuge tube. Add more methanol & repeat for a total of 3 passes. Collect extract in same tube. Blow down (evaporate methanol). Adjust final volume as desired w DD water. Filter & inject into HPLC for PEG, TMH & DMSO

Sample #	Description	Vial tare + Soil		Net soil	Final Vol
R7007880719 1100SEM	0422 1120SRG for test	9.7g	13.4	3.7	5 ml
R7007880719 1105SEM	0422 1120SRG + Spike*	9.7g	13.7	4.0	5

*(25 ul PEG, 25 ul TMH, 50 ul DMSO)

A light grey precipitate formed in the centrifuge tubes when the 2nd & 3rd extracts were added. - Probably some water soluble, methanol insoluble salt (K_2SO_4?)

The methanol was evaporated away under a stream of purified air. I used a vacuum pump with a filtration column at the inlet and a C-18 SPE column at the outlet end of the tubing system). To speed up the evaporation, the centrifuge tube was placed in a beaker of warm water

Spike level calculation

Analyte	g/ml	ul added	mg/g added	mg/g in 1100	mg/g in 1105	additional mg/g found	% Recovery	mg/g 1105 after extra blowdown	after extra blowdown % R
PEG	1.125	25	7.0	~~6.6~~ 3.3	~~1.3~~ 0.65	~~NA~~	~~NA~~	~~2.0~~ 0.48	NA
TMH	1.054	25	6.6	~~4.1~~ 2.1	~~1.3~~ 6.8	~~8.9~~ 4.7	~~135~~ 70%	~~1.3~~ 6.7	69%
DMSO	1.101	50	13.8	~~8.6~~ 4.3	~~30.2~~ 15.1	~~21.6~~	~~157~~ 75%	~~29~~ 14.6	75%

~ g/ml = mg/ul

2nd evaporation (sample .. 1105 ..) took from 3:15 to 3:45 to go from ~10 ml to ~3.7 ml. Both samples were slightly acid (pH 4-5) after concentration & volume adjustment. There was just a little brown precipitate (probably just soil particles) in the final water solution

PEG results are strange in that the peaks for the spiked sample (1105) look higher, but the reported peak height are lower resulting in a low reported concentration. The spiked sample did not have a negative "water" peak. This indicates that Methanol was not adequately removed and probably caused the strange height reports.

July 20, 1988 Reagents in Soil R7007

Sample #	for PEG/TMH/DMSO 8 ml vial tare	+ Sample	Net Sample	for KOH Beaker tare	+ Sample	Net Sample	ml 0.1N HCl used	KOH mg/g	Description
R7007880422095 9SRG	9.7	12.3	2.6	104.1	107.6	3.5	101.0	~~161.6~~ 162	Lo after Reag 2
04221050SRG	9.8	12.7	2.9	106.3	109.1	2.8	30.8	~~61.6~~ 62	Lo after wash 1
04221120SRG	9.8	13.5	3.6	104.4	112.5	8.1	29.75	~~20.6~~ 21	Lo after wash 2
04250925SRG	9.9	12.4	2.5	102.2	107.2	5.0	*119.1	133.~~X~~	Hi after Reagent 0
04250955SRG	9.8	11.9	2.1	105.3	108.7	3.4	43.0	~~70.8~~ 71	Hi after wash 1
04251025SRG	9.7	11.8	2.1	103.5	110.1	6.6	~~26.25~~ ~~23.0~~ *	22.~~2~~	Hi - final
R7007880720100 7SEM *	9.8	13.9	4.1	106.7	112.1	5.4	18.4	19	Duplicate ~~Spiked PEG TMH, DMSO~~

Duplicate of ...04221120SRG

~~[illegible]~~

not done

~~* Spiked with 25 ml PEG~~

~~[illegible] 25 ml TMH~~

~~50 ml DMSO~~

~~unspiked duplicate see sample~~

~~R7007880719 1055EM~~

See Calc file NBRG 7/21/88 for these results

Extracted as on pg 85. except only 2 ml of H_2O used

titration endpoint is pH 8.2

*pH ~~[illegible]~~ drifted up slowly after endpoint was reached. Endpoint was if it stayed between 8.15 and 8.25 for one minute

HPLC samples were all blown down from ~11 ml (with Methanol) to <2 ml to get rid of the methanol and were then brought up to 5 ml final volume with water. The water extracts were mixed well & ~~filtered~~ centrifuged for 2 min and filtered with LidEx filters for HPLC

Mean, Std Dev, and % Recovery Calculations from data in NBRG 07/21

Analyte	mg/g found in duplicates 07191105SEM	04221120SRG	07201007SEM	Average	Std Dev	mg/g added to 07191105	mg/g found in 07191105	mg/g recovered *	Percent Recovery
DMSO	4.3	4.4	4.2	4.3	0.1	13.8	14.5	10.2	74%
TMH	2.3 (2.3)	2.3 (2.3)	2.3 (2.2)	2.3 (2.3)	0.04	6.6	7.0	4.7	71%
PEG	1.3	1.4	1.2	1.3	0.1	7.0	10.7	9.4	134%
KOH	NA	21	19	20	1.4				

* = mg/g in 07191105 - Average

July 22, 1988

[illegible signature]

8/4/88 QA Review - corrective actions

The Monochlorobiphenyl results in ~~the~~ WMNB 4/28/88 were anomalous and did not agree with result of soil monitoring samples (3/31 and 4/5). I examined the standards and compared the areas of the 11 peaks and DCB peaks

Spreadsheet →	3/31		WMNB 4/1		WMNB 4/5/88		WMNB 4/28/88		from another project WMCE 4/21	
Standard	peak 11	DCB	11	DCB	11	DCB	11	DCB	#11	DCB
(2) low	64.69	436.37	101.04	483.98	104.28	362.6	196.99	1180.5	ND	717.15
(0) middle	129.4	6712.4	170.64	7679.98	188.08	7223.56	556.64	6357.75	209.64	5258.62
(...) high	808.50	46898	1078.32	51667	1183.49	52007	1111.32	45264	756.67	41380
n-2 ul injection									WMCE 4/15	
									86.51	651.28
									213.82	4050.29
									1021.61	35265

The peak 11 areas of 4/28 for the low and middle standard are unusually large, although the area of the high standard for peak 11 is normal. The DCB peak area for the low standard is also unusually large. ~~This indicates~~ although the DCB areas for the middle and high standards are normal. These facts, and an inspection of the chromatograms, lead me to believe that there was baseline interference in the standards - to correct the problem I will substitute the standards of 4/21 (from another project) for calculating samples of 4/28. 4/21 is closest in time to 4/28 and the chromatogram look OK. The DCB areas in the samples and the chromatogram indicate that the interference was baking out gradually even while the standards were running and was pretty well gone before correctly diluted samples were injected

I also changed the standards the same way in WMRE 4/28/88.

I did not save the changes because they actually made matters worse. We need to re-analyze the final soils from NB's gallon reactions. Meanwhile, the results ~~can~~ must be deleted from the report as far as Monochlorobiphenyl is concerned.

I had not noticed earlier, but some of the peak 11 areas in samples of 4/28 are 60 x the highest standard. That alone is enough to re-run them. (more delete)

August 4, 1988 Edwina Mikiel

6/15/88 R7007

Notebook "Lab 3"

Reagent Analysis Prep

Sample #	Cent tubent	tubent Sample	Sample wt	Volume
R7007 8804250840 RRG	15.5	16.7	1.2	10
R7007 8804250938 WRG	15.2	16.5	1.3	10
R7007 880425 1000 WRG	15.1	20.3	5.2	10
R7007 8804220925 RRG	15.3	16.3	1.0	10
R7007 8804 2210 35 WRG	15.1	16.6	1.5	10
R7007 8804 221050 WRG	15.1	19.3	4.2	10

Tim Serante
6/15/88

6/18/88 ~~R7000~~ R7007

PCB analysis PM for Reagents & Washes

Sample #	Vial time	Vial Sample	Sample
0788042508 40RRG	9.7	13.6	3.9
0788042509 38WRG	9.9	13.1	3.2
0788042510 00WRG	9.7	12.9	3.2
0788042210 50WRG	9.9	13.4	3.5
0788042210 35WRG	9.8	13.4	3.6
0788042209 25RRG	9.8	13.9	4.1
0788061815 40RTG	9.9	14.1	4.2
0788061815 50RTG	9.7	13.8	4.1

Took subsamples of R7007880422092 5RRG for Duplicate & spike

Duplicate R7007880618154 0RTG
Spike R7007880618155 0 RTG

Spiked sample R7007880618155 0 with 5ml of 500 ppm PCB

[signature] 6/18/88